पेटेंट कार्यालय
का
शासकीय जर्नल

OFFICIAL JOURNAL
OF
THE PATENT OFFICE

निर्गमन सं. **05/2014**	शुक्रवार	दिनांक: 31/01/2014
ISSUE NO. 05/2014	**FRIDAY**	**DATE:** 31/01/2014

पेटेंट कार्यालय का एक प्रकाशन
PUBLICATION OF THE PATENT OFFICE

INTRODUCTION

In view of the recent amendment made in the Patents Act, 1970 by the Patents (Amendment) Act, 2005 effective from 01st January 2005, the Official Journal of The Patent Office is required to be published under the Statute. This Journal is being published on weekly basis on every Friday covering the various proceedings on Patents as required according to the provision of Section 145 of the Patents Act 1970. All the enquiries on this Official Journal and other information as required by the public should be addressed to the Controller General of Patents, Designs & Trade Marks. Suggestions and comments are requested from all quarters so that the content can be enriched.

(**Chaitanya Prasad**)
CONTROLLER GENERAL OF PATENTS, DESIGNS & TRADE MARKS

31st JANUARY, 2014

CONTENTS

THE PATENT OFFICE
KOLKATA, 31/01/2014
Address of the Patent Offices/Jurisdictions

The following are addresses of all the Patent Offices located at different places having their Territorial Jurisdiction on a Zonal basis as shown below:-

1	Office of the Controller General of Patents, Designs & Trade Marks, Boudhik Sampada Bhavan, Near Antop Hill Post Office,S.M.Road,Antop Hill, Mumbai – 400 037 Phone: (91)(22) 24123311, Fax : (91)(22) 24123322 E-mail: cgpdtm@nic.in	4	The Patent Office, Government of India, Intellectual Property Rights Building, G.S.T. Road, Guindy, Chennai – 600 032. Phone: (91)(44) 2250 2081-84 Fax : (91)(44) 2250 2066 E-mail: chennai-patent@nic.in ❖ The States of Andhra Pradesh, Karnataka, Kerala, Tamil Nadu and the Union Territories of Puducherry and Lakshadweep.
2	The Patent Office, Government of India, Boudhik Sampada Bhavan, Near Antop Hill Post Office,S.M.Road,Antop Hill, Mumbai – 400 037 Phone: (91)(22) 24137701 Fax: (91)(22) 24130387 E-mail: mumbai-patent@nic.in ❖ The States of Gujarat, Maharashtra, Madhya Pradesh, Goa and Chhattisgarh and the Union Territories of Daman and Diu & Dadra and Nagar Haveli	5	The Patent Office (Head Office), Government of India, Boudhik Sampada Bhavan, CP-2, Sector –V, Salt Lake City, Kolkata- 700 091 Phone: (91)(33) 2367 1943/44/45/46/87 Fax: (91)(33) 2367 1988 E-Mail: kolkata-patent@nic.in ❖ Rest of India
3	The Patent Office, Government of India, Boudhik Sampada Bhavan, Plot No. 32., Sector-14, Dwarka, New Delhi – 110075 Phone: (91)(11) 2808 1921 – 25 Fax: (91)(11) 2808 1920 & 2808 1940 E.mail: delhi-patent@nic.in ❖ The States of Haryana, Himachal Pradesh, Jammu and Kashmir, Punjab, Rajasthan, Uttar Pradesh, Uttaranchal, Delhi and the Union Territory of Chandigarh.		

Website: www.ipindia.nic.in
www.patentoffice.nic.in

All applications, notices, statements or other documents or any fees required by the Patents Act, 1970 and The Patents (Amendment) Act, 2005 or by the Patents (Amendment) Rules, 2006 will be received only at the appropriate offices of the Patent Office.

Fees: The Fees may either be paid in cash or may be sent by Bank Draft or Cheques payable to the Controller of Patents drawn on a scheduled Bank at the place where the appropriate office is situated.

पेटेंट कार्यालय
कोलकाता, दिनांक 31/01/2014
कार्यालयों के क्षेत्राधिकार के पते

विभिन्न जगहों पर स्थित पेटेन्ट कार्यालय के पते आंचलिक आधार पर दर्शित उनके प्रादेशिक अधिकार क्षेत्र के साथ नीचे दिए गए हैं :-

1	कार्यालय: महानियंत्रक, एकस्व, अभिकल्प तथा व्यापार चिह्न, एनटॉप हिल डाकघर के समीप, एस. एम. रोड, एनटॉप हिल, मुम्बई -400 037, भारत. फोन: (91)(22) 24123311 फैक्स: (91)(22) 24123322 ई.मेल: cgpdtm@nic.in	4	पेटेंट कार्यालय चेन्नई, इंटेलेक्चुअल प्रोपर्टी राइट्स बिल्डिंग इंडस्ट्रियल इस्टेट एसआईडीसीओ आरएमडी गोडाउन एरिया एडजसेन्ट टु ईगल फ्लास्क जी.एस.टी. रोड, गायन्डी, चेन्नई - 600 032. फोन: (91)(44) 2250 2081-84 फैक्स: (91)(44) 2250-2066 ई.मेल: chennai-patent@nic.in ❖ आन्ध्र प्रदेश, कर्नाटक, केरल, तमिलनाडु तथा पुडुचेरी राज्य क्षेत्र एवं संघ शासित क्षेत्र, लक्षद्वीप
2	पेटेंट कार्यालय, भारत सरकार बौद्धिक संपदा भवन, एनटॉप हिल डाकघर के समीप, एस. एम. रोड, एनटॉप हिल, मुम्बई - 400 037, फोन: (91)(22) 2413 7701, फैक्स: (91)(22) 2413 0387 ई.मेल: mumbai-patent@nic.in ❖ गुजरात, महाराष्ट्र, मध्य प्रदेश, गोआ तथा छत्तीसगढ़ राज्य क्षेत्र एवं संघ शासित क्षेत्र, दमन तथा दीव, दादर और नगर हवेली.	5	पेटेंट कार्यालय कोलकाता (प्रधान कार्यालय), बौद्धिक संपदा भवन, सीपी-2, सेक्टर-V, साल्ट लेक सिटी, कोलकाता- 700 091, भारत. फोन: (91)(33) 2367 1943/44/45/46/87 फैक्स/Fax: (91)(33) 2367 1988 ई.मेल: kolkata-patent@nic.in ❖ भारत का अवशेष क्षेत्र
3	पेटेंट कार्यालय दिल्ली, बौद्धिक संपदा भवन, प्लॉट सं. 32, सेक्टर - 14, द्वारका, नई दिल्ली - 110 075. फोन: (91)(11) 2808 1921-25 फैक्स: (91)(11) 2808 1920, 2808 1940 ई.मेल: delhi-patent@nic.in ❖ हरियाणा, हिमाचल प्रदेश, जम्मू तथा कश्मीर, पंजाब, राजस्थान, उत्तर प्रदेश, दिल्ली तथा उत्तरांचल राज्य क्षेत्रों, एवं संघ शासित क्षेत्र चंडीगढ़		

वेबसाइट: http://www.ipindia.nic.in
www.patentoffice.nic.in

पेटेंट अधिनियम, 1970 तथा पेटेंट (संशोधन) अधिनियम, 2005 अथवा पेटेंट (संशोधन) नियम, 2006 द्वारा वांछित सभी आवेदन, सूचनाएँ, विवरण या अन्य दस्तावेज या कोई शुल्क पेटेंट कार्यालय के केवल उपयुक्त कार्यालय में स्वीकृत होंगे ।

शुल्क: शुल्क या तो नकद रूप में या "Controller of Patents" के नाम में देय बैंक ड्राफ्ट या चेक के द्वारा भेजी जा सकती है जो उसी स्थान के किसी अनुसूचित बैंक में प्रदत्त हो जहाँ उपयुक्त कार्यालय स्थित हैं।

SPECIAL NOTICE

18 Months publication as required under Section 11A of the Patents Act, 1970 as amended by the Patents (Amendment) Act, 2005.

Notice is hereby given that any person at any time before the grant of Patent may give representation by way of opposition to the Controller of Patents at appropriate office on the ground and in a manner specified under section 25(1) of the Patents (Amendment) Act, 2005 read with Rule 55 of the Patents (Amendment) Rules, 2006.

Notice is also given that if any interested person requests for copies of the complete specification, drawing and abstract of any application already published, the photocopy of the same can be supplied by the Patent Office as per the jurisdiction on payment of prescribed fees of Rs.4/- per page. If any further details are required to be obtained, the same can be provided by the respective Patent Offices on request.

(**Chaitanya Prasad**)
CONTROLLER GENERAL OF PATENTS, DESIGNS & TRADE MARKS

SPECIAL NOTICE

Under the new provision of the Patents Act, 1970 as amended by the Patents (Amendment) Act, 2005 and Rules there under, Publication of the matter relating to Patents in the Official Gazette of India Part III, Section 2 has been discontinued and instead The Official Journal of the Patent Office is being published containing all the activities of The Patent Office such as publication of all the patent applications after 18th months , grant of patents & all other information in respect of the proceedings as required under the provisions of the Patents (Amendment) Act, 2005 and Rules thereunder on weekly basis on every **Friday**.

The Journal is uploaded in the website every Friday. So Paper form and CD-ROM form of the Journal are discontinued from 01/01/2009.

SPECIAL NOTICE

Every effort is being taken to publish all the patent applications under section 11(A) of the Patents Act. However, if duplication of publication of any application is found, then earlier date of publication will be taken for the purpose of provisional protection for applicant and Patent Office will grant Patent not before six months from the date of second publication, provided that there is there is no third party representation.

Early Publication:

The following patent applications have been published under section 11A (2) of The Patents (Amendment) Act 2005 and rule 24A of The Patents (Amendment) Rules, 2006. Any person may file representation by way of opposition to the Controller of Patents at the appropriate office against the grant of the patent in the prescribed manner under section 25(1) of the Patents (Amendment) Act 2005 read with the rule 55 of The Patents (Amendment) Rules, 2006:

(12) PATENT APPLICATION PUBLICATION
(21) Application No.3795/DEL/2013 A
(19) INDIA
(22) Date of filing of Application :27/12/2013
(43) Publication Date : 31/01/2014

(54) Title of the invention : DESIGNING AND FABRICATION OF AN FOSSILE FUEL SAVING ECO-FRIENDLY VEHICLE

(51) International classification :B60K
(31) Priority Document No :NA
(32) Priority Date :NA
(33) Name of priority country :NA
(86) International Application No :NA
Filing Date :NA
(87) International Publication No : NA
(61) Patent of Addition to Application Number :NA
Filing Date :NA
(62) Divisional to Application Number :NA
Filing Date :NA

(71)**Name of Applicant :**
1)GULZAR GROUP OF INSTITUTES
Address of Applicant :G.T. ROAD, VILLAGE AND POST OFFICE LIBRA, KHANNA, LUDHIANA, 141401, PUNJAB (INDIA)
(72)**Name of Inventor :**
1)KANWAR JABAR SINGH GILL
2)AMANDEEP SINGH
3)AMANDEEP SINGH
4)DEEPAK KUMAR
5)DEEPAK KUMAR
6)DEEPAK KUMAR
7)GAUTAM KUMAR MISHRA
8)ANIRUDH KUMAR

(57) Abstract :
Compressed air as a source of energy in different uses in general and as a nonpolluting fuel in compressed air vehicles has attracted scientists and engineers for centuries. Efforts are being made by many developers and manufacturers to master the compressed air vehicle technology in all respects for its earliest use by the mankind. The present work gives a brief introduction to the latest developments of a compressed-air vehicle along with an Introduction to various problems associated with the technology and their solution. While developing of compressed air vehicle, control of compressed air parameters like temperature, energy density, requirement of input power, energy release and emission control have to be mastered for the development of a safe, light and cost effective compressed air vehicle in near future.

No. of Pages : 23 No. of Claims : 7

(12) PATENT APPLICATION PUBLICATION
(19) INDIA
(22) Date of filing of Application :15/01/2013
(21) Application No.126/MUM/2013 A
(43) Publication Date : 31/01/2014

(54) Title of the invention : DOUBLE COLUMN NC CONTROLLED WITH ELECTRIC SERVO BALL SCREW DRIVEN CUTTING HEAD FEEDING AND BAR INDEXING BAND SAW MACHINE.

(51) International classification	:B23D53/04, B23D55/04, B23D55/08, B23D59	(71)**Name of Applicant :** **1)ITL INDUSTRIES LIMITED** Address of Applicant :111, SECTOR - B, SANWER ROAD, INDORE, 452015 Madhya Pradesh India
(31) Priority Document No	:NA	(72)**Name of Inventor :** **1)RAJENDRA JAIN**
(32) Priority Date	:NA	
(33) Name of priority country	:NA	
(86) International Application No	:NA	
Filing Date	:NA	
(87) International Publication No	: NA	
(61) Patent of Addition to Application Number	:NA	
Filing Date	:NA	
(62) Divisional to Application Number	:NA	
Filing Date	:NA	

(57) Abstract :
The present invention machine double column Numeric controlled with electric servo ball screw driven cutting head feeding (2) and bar indexing band saw machine (1). to overcome limitations in above explained conventional machines by converting a hydraulic cylinder operated cutting feed and indexing operation to an electric servo and ball screw driven arrangement along with an intelligent PLC. cutting head feed , The downward motion of cutting arm is programmed in such a way that depending upon the material composition and size of the bar, PLC screen display the type of blade require and its running speed in meters per minute to achieve optimum productivity and tool life with the help of electric servo. It is possible to define load per tooth in relation to a blade speed and its pitch. In case of round shape bars the down cutting feed is varying depending upon the contact length with the bar. When blade enters, its feed is very high and reduces gradually up to the center and then automatically again increases as the blade contact length decreases, this way the productivity is enhanced by 20-30 %. In case of square or rectangular bar die feed rate remains constant as the blade contact length does not change. At the time of contact with the material blade speed and feed are automatically reduces as per programmed depending upon the material composition & manufacturing process. This feature saves blade damage from sudden jerk. Cutting arm upward motion is rapid to minimize overall production cycle time. Bar Indexing to obtain desired length cut pieces:- an electric servo with ball screw is moving the shuttle to the definite distance with ± 10 micron accuracy after each cut is complete. It is possible to program variety lengths and number of pieces required from the same bar, which automatically perform and cut the pieces with high degree of accuracy without a risk of rejection. Programs can be saved in memory and can be used as and when required just by putting the programs No. in PLC , desired cut pieces can be obtained.

No. of Pages : 10 No. of Claims : 3

(12) PATENT APPLICATION PUBLICATION
(19) INDIA
(22) Date of filing of Application :15/01/2014
(21) Application No.126/MUM/2014 A
(43) Publication Date : 31/01/2014

(54) Title of the invention : DRIVER SEAT TO PREVENT BACKPAIN USING LUMBAR ROLL, SHOCK ABSORBER AND STOPPER

(51) International classification	:B60N2/00, B62D65/14
(31) Priority Document No	:NA
(32) Priority Date	:NA
(33) Name of priority country	:NA
(86) International Application No	:NA
Filing Date	:NA
(87) International Publication No	: NA
(61) Patent of Addition to Application Number	:NA
Filing Date	:NA
(62) Divisional to Application Number	:NA
Filing Date	:NA

(71)**Name of Applicant :**
1)Shah Gnaneshwary Dushyantkumar
Address of Applicant :12, Rohini Society, P.O. Ambavadi, Ahmedabad 380 015 Gujarat, India.
(72)**Name of Inventor :**
1)Shah Gnaneshwary Dushyantkumar

(57) Abstract :
The present invention relates to a fatigue free driver seat which uses perfect combination of a pair of rear mounted hydraulic vertical shock absorbers (3), a lumbar roll (7) and a pair of slotted stopper (5). The working effect of these three parts simultaneously gives the total relief from the lower back pain to the driver. Also, the construction of the driver seat is very simple and cost effective as it does not require maintenance and does less mechanical parts and process to be used for the fastening mechanism.

No. of Pages : 17 No. of Claims : 6

(12) PATENT APPLICATION PUBLICATION
(19) INDIA
(22) Date of filing of Application :15/01/2013
(21) Application No.125/MUM/2013 A
(43) Publication Date : 31/01/2014

(54) Title of the invention : AN APPLICATION OF AUGMENTED REALITY FOR PERSONALIZED MOMENTS & INVITATION CARDS.

(51) International classification	:G06F15/16, G06F17/30, H04H20/38
(31) Priority Document No	:NA
(32) Priority Date	:NA
(33) Name of priority country	:NA
(86) International Application No	:NA
Filing Date	:NA
(87) International Publication No	: NA
(61) Patent of Addition to Application Number	:NA
Filing Date	:NA
(62) Divisional to Application Number	:NA
Filing Date	:NA

(71)**Name of Applicant :**
1)AVIJIT BHAYA
Address of Applicant :49, MAA VIHAR COLONY, P.O. RAJENDRA NAGAR, A.B. ROAD, INDORE 452012, Madhya Pradesh India
(72)**Name of Inventor :**
1)AVIJIT BHAYA

(57) Abstract :
Augmented reality (AR) is a live, direct or indirect, view of a physical, real-world environment whose elements are augmented by computer-generated sensory input such as sound, video, graphics or GPS data. As a result, the technology functions by enhancing ones current perception of reality. In our invention the use of Augmented Reality is to overlay Video Clips (RGB and RGB + Alpha Channels) and Audio on an Image Marker through a Phone or Tablet. This specifically comes under Image Marker based Augmented Reality where the Image Markers are tracked using Phone or Tablet Camera and the content is rendered using the device hardware capabilities. Imagine looking at the photo of any wedding. Now that image is frozen in time. But with this application, youll be able to relive the moments of your daughters marriage, just by looking at the photographs under the phone or Tablet Camera! Or, by simply watching a marriage invitation card under a camera, the bride and groom will pop-up as a holographic projection (RGB +Alpha Channel Video Clip) and invites in their marriage. Normally this application is already used in some other fields like Industries, infrastructures and retail stores to facilitate different purposes. But in our knowledge and search no similar use of this application is found to capture Personalized Moments and Invitation Cards.

No. of Pages : 11 No. of Claims : 4

(12) PATENT APPLICATION PUBLICATION
(19) INDIA
(22) Date of filing of Application :13/06/2013
(21) Application No.2019/MUM/2013 A
(43) Publication Date : 31/01/2014

(54) Title of the invention : A BRACE FOR KNEE TREATMENT AFTER SURGERY

(51) International classification :A61F5/01
(31) Priority Document No :NA
(32) Priority Date :NA
(33) Name of priority country :NA
(86) International Application No :NA
Filing Date :NA
(87) International Publication No : NA
(61) Patent of Addition to Application Number :NA
Filing Date :NA
(62) Divisional to Application Number :NA
Filing Date :NA

(71)**Name of Applicant :**
1)Dr. OZA, Sharad Ghanshyambhai
Address of Applicant :A-303, Samay Apartment, Nr. Azad Society, Ahmedabad Gujarat India
(72)**Name of Inventor :**
1)Dr. OZA, Sharad Ghanshyambhai

(57) Abstract :
The present invention provides a brace(1) for knee treatment after surgery in osteoarthritis in knee joint after surgery which enables the patient to bear body weight on the same day after surgery. The said brace (1) comprises of upper supporting structure (2) for supporting the portion above the knee; lower supporting structure (3) to support the portion below the knee; connecting elements (4) connecting both the supporting structures; plurality of straps (6) and buckles (7) fastening purpose; open region (5) and hinges (9). The said hinges are provided to facilitate bending of connecting element and thereby leg at 90°. The present brace (1) for knee treatment after surgery provides right level of support and compression requirement and is easy to use. The said brace (1) can also be used before surgery to support the knee till the patient becomes fit for surgery in cases where the patient is not fit for surgery.

No. of Pages : 47 No. of Claims : 6

(12) PATENT APPLICATION PUBLICATION
(19) INDIA
(22) Date of filing of Application :16/07/2012
(21) Application No.2046/MUM/2012 A
(43) Publication Date : 31/01/2014

(54) Title of the invention : GLASS DECORATING SYSTEM

(51) International classification	:C03C17/00, B44F1/06, B41J3/407, B44C1/1	(71)**Name of Applicant :** **1)GOEL SCIENTIFIC GLASS WORKS LTD.** Address of Applicant :C-31/A, SARDAR ESTATE, AJWA ROAD, VADODARA-390 019, Gujarat, India.
(31) Priority Document No	:NA	(72)**Name of Inventor :**
(32) Priority Date	:NA	**1)GOEL HEMANT HARICHARAN**
(33) Name of priority country	:NA	
(86) International Application No	:NA	
Filing Date	:NA	
(87) International Publication No	:N/A	
(61) Patent of Addition to Application Number	:NA	
Filing Date	:NA	
(62) Divisional to Application Number	:NA	
Filing Date	:NA	

(57) Abstract :
In accordance with one aspect of the present disclosure, a glass article is disclosed. The glass article includes at least one float glass element connected to at least one load bearing borosilicate glass element. The float glass element is planar. The load bearing borosilicate glass element is tubular. In one embodiment, the at least one float glass element is connected to the at least one load bearing borosilicate glass element by means of an adhesive. In another embodiment, the at least one float glass element is connected to the at least one borosilicate glass element by means of a vacuum. The vacuum is created by a rubber cap. In one embodiment, the rubber cap is of transparent silicon rubber.

No. of Pages : 16 No. of Claims : 7

(12) PATENT APPLICATION PUBLICATION
(19) INDIA
(22) Date of filing of Application :03/01/2014
(21) Application No.28/MUM/2014 A
(43) Publication Date : 31/01/2014

(54) Title of the invention : A DEVICE, MECHANISM, AND METHOD, OF CONVERTOR OF LIQUID, FUEL FROM LIQUID TO GASEOUS STATE

(51) International classification	:F02M29/00, F02M69/00
(31) Priority Document No	:NA
(32) Priority Date	:NA
(33) Name of priority country	:NA
(86) International Application No	:NA
Filing Date	:NA
(87) International Publication No	: NA
(61) Patent of Addition to Application Number	:NA
Filing Date	:NA
(62) Divisional to Application Number	:NA
Filing Date	:NA

(71)**Name of Applicant :**
1)VISHRAM Y. ABHYANKAR
Address of Applicant :A/302, AMEYA R.B.I. C.H.S., NEW PRABHADEVI ROAD, OPP. MARATHE UDYOG BHAWAN, PRABHADEVI, MUMBAI-25. Maharashtra India
(72)**Name of Inventor :**
1)VISHRAM Y. ABHYANKAR

(57) Abstract :
A Device, mechanism, and method, Convertor of liquid fuel from liquid to gaseous state is a pre gas maker, which converts the liquid state, fuel, in to the storable gas by mixing with the air before injecting in to the engine for combustion, or using or utilizing. Rather to inject the liquid fuel in to the engine with the air for combustion at particular ratio, invention, device converts the liquid fuel in to the gas phase or gaseous state with the mixture of air, and store in to the storage tank, which can be used for combustion in the engine, again with the mixture of the air or directly as fuel for combustion in the engine, furthermore air fuel gas state mixture can be use directly, without the storing in a storage tank, in to the engine for combustion.

No. of Pages : 12 No. of Claims : 7

(12) PATENT APPLICATION PUBLICATION
(19) INDIA
(22) Date of filing of Application :22/08/2013
(21) Application No.2746/MUM/2013 A
(43) Publication Date : 31/01/2014

(54) Title of the invention : COMPOSITION OF CRUDE DRUGS FOR TREATING DIARRHOEA.

(51) International classification	:A61K36/00, A61P1/04
(31) Priority Document No	:NA
(32) Priority Date	:NA
(33) Name of priority country	:NA
(86) International Application No	:NA
Filing Date	:NA
(87) International Publication No	: NA
(61) Patent of Addition to Application Number	:NA
Filing Date	:NA
(62) Divisional to Application Number	:NA
Filing Date	:NA

(71)**Name of Applicant :**
1)SHAMKUWAR PRASHANT BABARAO
Address of Applicant :GOVERNMENT COLLEGE OF PHARMACY, THIBA PALACE, RATNAGIRI, PIN NO. 415612, MAHARASHTRA, INDIA.
(72)**Name of Inventor :**
1)SHAMKUWAR PRASHANT BABARAO

(57) Abstract :
Diarrhoea is a widespread and recurring ailment that attacks adults, children and infants throughout the world. Diarrheal diseases are the leading cause of death among children under five years of age. In developing countries it is the major cause of death in malnourished children. Thus there is a great need of newer, economical and cost effective antidiarrhoeal agents The present invention provides a product which is a pharmaceutical composition (APC 27) essentially comprising the crude drug composition of Bael, Dadim, Kath and Mire for treating diarrhoea. A pharmaceutical composition (APC 27) produces antidiarrhoeal activity due to its antisecretory and antimotility effect. A pharmaceutical composition (APC 27) can be used in for treating diarrhoea in adult and paediatric patients as well as for treating diarrhoea in cancer patients and HIV patients. As the ingredients used in the said composition are easily available at low cost, a pharmaceutical composition (APC 27) can be available at minimum price.

No. of Pages : 22 No. of Claims : 7

(12) PATENT APPLICATION PUBLICATION
(19) INDIA
(22) Date of filing of Application :06/09/2013
(21) Application No.2906/MUM/2013 A
(43) Publication Date : 31/01/2014

(54) Title of the invention : ANTISPASMODIC PHARMACEUTICAL COMPOSITION

(51) International classification	:A61k36/00, A61P 1/06
(31) Priority Document No	:NA
(32) Priority Date	:NA
(33) Name of priority country	:NA
(86) International Application No	:NA
Filing Date	:NA
(87) International Publication No	: NA
(61) Patent of Addition to Application Number	:NA
Filing Date	:NA
(62) Divisional to Application Number	:NA
Filing Date	:NA

(71)**Name of Applicant :**
1)SHAMKUWAR PRASHANT BABARAO
Address of Applicant :GOVERNMENT COLLEGE OF PHARMACY, THIBA PALACE, RATNAGIRI, PIN NO. 415612, MAHARASHTRA, INDIA.
(72)**Name of Inventor :**
1)SHAMKUWAR PRASHANT BABARAO

(57) Abstract :
This invention relates to an antispasmodic pharmaceutical composition (APC 10) for treating spasmodic pain. Spasms are continuous smooth muscle contractions, lead to discomfort, uneasiness and could result into irritation and inflammation of the gastrointestinal tract posing a major health problem to the human being. It could even lead to threatening conditions such as gastritis and inflammatory bowel disorders. Current antispasmodics are used to treat such conditions successfully, but they have various side effects such as dry mouth, narrow angle glaucoma, tachycardia, obstructive disease of GI tract, light-headedness, drowsiness, or nervousness. Thus there is a great need of newer, economical and cost effective antispasmodic agents The present invention provides a product which is an antispasmodic pharmaceutical composition (APC 10) essentially comprising the crude drug composition of Ajamoda, Murud Sheng and Pudina for treating spasmodic pain. Results indicated that a pharmaceutical composition (APC 10) produces antispasmodic effect by suppressing smooth muscle contraction. An antispasmodic pharmaceutical composition (APC 10) can be used in intestinal colic, uterine colic, spasms in diarrhoea, dysentery and Irritable bowel syndrome. As the ingredients used in the said composition are easily available at low cost, an antispasmodic pharmaceutical composition (APC 10) can be available at minimum price. The present invented antispasmodic pharmaceutical composition (APC 10) comprises only 03 ingredients, it can be easy for standardization and quality control of the said composition.

No. of Pages : 16 No. of Claims : 9

(12) PATENT APPLICATION PUBLICATION
(19) INDIA
(22) Date of filing of Application :08/01/2014
(21) Application No.59/MUM/2014 A
(43) Publication Date : 31/01/2014

(54) Title of the invention : RAWANDALES LAPROSCOPIC PORT PLACEMENT BAROMETER

(51) International classification :A61B17/00
(31) Priority Document No :NA
(32) Priority Date :NA
(33) Name of priority country :NA
(86) International Application No :NA
Filing Date :NA
(87) International Publication No : NA
(61) Patent of Addition to Application Number :NA
Filing Date :NA
(62) Divisional to Application Number :NA
Filing Date :NA

(71)**Name of Applicant :**
1)DR. RAWANDALE PATIL ASHISH VISHWAS
Address of Applicant :INSTITUTE OF UROLOGY, SAKRI ROAD, DHULE-424001 Maharashtra India
(72)**Name of Inventor :**
1)DR. RAWANDALE PATIL ASHISH VISHWAS

(57) Abstract :
Rawandales laparoscopic port placement barometer device is useful for detection of successful entry into peritoneal cavity prior to insufflation of the peritoneal cavity during laparoscopy of the abdomen. By using this device a safe, fast, efficient and cost effective successful pneumoperitoneum can be safely created and successful port placement achieved. Procedure for using the Rawandales laparoscopic port placement barometer 1. With patient under anaesthesia in supine position 2. Take a skin incision of 2-4 mm at the site selected for port placement 3. Separate the subcutaneous tissue with an artery forceps 4. Maintain fixed apnoea in expiration for the patient 5. Tent the abdominal wall upwards by holding the skin firmly 6. Attach the verress needle to the barometer 7. Insert the needle into the abdomen and look for the rise in the water level in the indicator chamber (suggestive of negative pressure generated in the peritoneal entry) to confirm peritoneal entry 8. Detach the barometer and attach the insufflator to the veress to create the pneumoperitoneum. Later port is inserted inside. By tenting the abdomen, negative pressure is generated in the abdomen by Boyles principle.

No. of Pages : 8 No. of Claims : 8

(12) PATENT APPLICATION PUBLICATION
(19) INDIA
(22) Date of filing of Application :10/01/2014
(21) Application No.86/MUM/2014 A
(43) Publication Date : 31/01/2014

(54) Title of the invention : A PROCESS FOR THE PREPARATION OF THIOSEMICARBAZONES ENCAPSULATED METAL NANOPARTICLES AS POTENT ANTI-TUBERCULOSIS AGENTS

(51) International classification	:A61K 31/175, C07D209/40
(31) Priority Document No	:NA
(32) Priority Date	:NA
(33) Name of priority country	:NA
(86) International Application No	:NA
Filing Date	:NA
(87) International Publication No	: NA
(61) Patent of Addition to Application Number	:NA
Filing Date	:NA
(62) Divisional to Application Number	:NA
Filing Date	:NA

(71)**Name of Applicant :**
1)DAWANE BHASKAR SADASHIV
Address of Applicant :SCHOOL OF CHEMICAL SCIENCES SWAMI RAMANAND TEERTH MARATHWADA UNIVERSITY, NANDED 431602. Maharashtra India
2)GACCHE RAJESH NIVARTI
3)YEMUL OMPRAKASH SHRINIVAS
(72)**Name of Inventor :**
1)DR. DAWANE BHASKAR SADASHIV
2)DR. GACCHE RAJESH NIVARTI
3)DR. YEMUL OMPRAKASH SHRINIVAS
4)MR. KAMBLE RAHUL DATTA
5)MR. PATIL SNEHALKUMAR DATTATRAY
6)MS. MOGLE PRATIMA PRAKASH
7)MR. HESE SHRIKANT VASANTAPPA
8)MR. MORE RAHUL ASHOKRAO
9)MS KAMBLE SONALI SHANKAR
10)MR. KOTE JEEVAN RAMESH

(57) Abstract :
Thiosemicarbazone derivatives were synthesized by reacting thiosemicarbazide with substituted aldehydes and ketones using green solvent (PEG 400) in acidic catalyst. Metal naono-particle (silver, nickel, cobalt, iron, manganese, copper, vanadium, chromium, cadmium, molybdenum) encapsulated thiosemicarbazone derivatives were obtained by reduction method. Anti-tuberculosis activity against Mycobacterim tuberculosis of metal nano-particles encapsulated thiosemicarbazone derivatives has been tested and compared against standard Rifampicin. Cytotoxicity by hemolysis method of obtained product is less as compared with standard anti-TB Rifampicin drug.

No. of Pages : 25 No. of Claims : 5

(12) PATENT APPLICATION PUBLICATION
(19) INDIA
(22) Date of filing of Application :17/07/2013
(21) Application No.2399/MUM/2013 A
(43) Publication Date : 31/01/2014

(54) Title of the invention : SYNERGISTIC EFFECT OF PIPERINE WITH DIPHENOXYLATE IN TREATING DIARRHOEA.

(51) International classification	:C07D317/68, A61P1/12
(31) Priority Document No	:NA
(32) Priority Date	:NA
(33) Name of priority country	:NA
(86) International Application No	:NA
Filing Date	:NA
(87) International Publication No	: NA
(61) Patent of Addition to Application Number	:NA
Filing Date	:NA
(62) Divisional to Application Number	:NA
Filing Date	:NA

(71)**Name of Applicant :**
1)SHAMKUWAR PRASHANT BABARAO
Address of Applicant :GOVERNMENT COLLEGE OF PHARMACY, THIBA PALACE, RATNAGIRI, PIN NO. 415612, MAHARASHTRA, INDIA.
(72)**Name of Inventor :**
1)SHAMKUWAR PRASHANT BABARAO

(57) Abstract :
Despite the availability of several remedies to treat diarrhoea including botanicals and chemical agents, yet there is a great need for the evaluation of agent to meet the challenges of upcoming era regarding disease burden. Hence, there is a need of a drug which will treat the diarrhoea effectively with minimum side effects. Diphenoxylate is an effective antidiarrhoeal agent. But it produces undesirable effect of like nausea, drowsiness, diziness, restlessness and abdominal cramps. Higher doses have CNS effects & prolonged use can potentially lead to opioid dependence. The present invention provides synergistic effect of Piperine with Diphenoxylate causing potentiation of antidiarrhoeal activity of Diphenoxylate by Piperine. Particularly, the present invention provides decrease in effective antidiarrhoeal dose of the Diphenoxylate when given with Piperine could result in reducing the dose dependent side effect of Diphenoxylate which make the Diphenoxylate suitable for treatment of acute as well as chronic diarrhoea.

No. of Pages : 24 No. of Claims : 5

(12) PATENT APPLICATION PUBLICATION
(19) INDIA
(22) Date of filing of Application :08/01/2014

(21) Application No.58/MUM/2014 A
(43) Publication Date : 31/01/2014

(54) Title of the invention : SELF SEALING HYDRALIC FITTINGS OR HYDRAULIC FITTINGS WITH PERMANENT DOUBLE OR TRIPLE METALIC SANDWICH JOINT WITH BONDED RUBBER FOR SEALING.

(51) International classification :F16L29/02
(31) Priority Document No :NA
(32) Priority Date :NA
(33) Name of priority country :NA
(86) International Application No :NA
Filing Date :NA
(87) International Publication No : NA
(61) Patent of Addition to Application Number :NA
Filing Date :NA
(62) Divisional to Application Number :NA
Filing Date :NA

(71)**Name of Applicant :**
1)MR. SAGAR K. DESAI
Address of Applicant :SN 62/48/2, FLAT NUM 7, MADHURI MILIND COMPLEX, SNEHLATA CONSTRUCTION, WADGAON BUDRUK, SINHAGAD ROAD, OPP ABHIRUCHI MALL, PUNE (411051), MAHARASHTRA, INDIA.
(72)**Name of Inventor :**
1)MR. SAGAR K. DESAI

(57) Abstract :
This invention mainly involves Hydraulic Fittings with Permanent Double or Triple Metallic Sandwich Joint with Bonded Rubber for Sealing or it can be called as Self Sealing Hydraulic Fittings. As these are self sealing hydraulic fittings (Banjo, Banjo Bolt, Nylon Pipe Banjo Closing Plugs, Couplings, Connectors & plugs) there is no requirement of separate copper washer or bonded seal. Apart from this there is no requirement to replace in field as this is permanent joint with hydraulic fittings which will not involve any replacement cost. Also there is no need of pre assembly on final assembly line as there will not be any separate washer requirement and washer radial shifting (offsetting) issue during assembly will be eliminated. These self sealing hydraulic fittings are with metallic sandwich joint which is concentric with bores (For Banjos & Nylon Pipe Banjos) & perpendicular, concentric to threads for (Banjo Bolt, Closing Plugs, Couplings, Connectors & plugs) which is one of the important parameter in hydraulic joint to avoid leakage. In our Hydraulic Fittings with permanent Metallic Sandwich Joint Geometric Tolerances need not to be maintained so closed during machining, as there will be rubber edge to compensate the deviation during assembly, this reduces the cost of fittings compared with existing fittings.

No. of Pages : 10 No. of Claims : 7

(12) PATENT APPLICATION PUBLICATION
(19) INDIA
(22) Date of filing of Application :07/01/2014
(21) Application No.54/MUM/2014 A
(43) Publication Date : 31/01/2014

(54) Title of the invention : A SYSTEM FOR CENTRALLY MANAGING AND CONTROLLING LIGHTING UNITS

(51) International classification	:H05B37/00, H05B43/00
(31) Priority Document No	:NA
(32) Priority Date	:NA
(33) Name of priority country	:NA
(86) International Application No	:NA
Filing Date	:NA
(87) International Publication No	: NA
(61) Patent of Addition to Application Number	:NA
Filing Date	:NA
(62) Divisional to Application Number	:NA
Filing Date	:NA

(71)**Name of Applicant :**
1)NITIN PRABHAKAR NISTANE
Address of Applicant :PLOT 3 S-3 II FLOOR, SNEH SAFALYA APARTMENTS, OPP. HOTEL RADISSON WARDHA ROAD, NAGPUR 440 015, MAHARASHTRA, INDIA
2)KANCHAN NITIN NISTANE
(72)**Name of Inventor :**
1)NITIN PRABHAKAR NISTANE
2)KANCHAN NITIN NISTANE

(57) Abstract :
Disclosed is a system for centrally managing and controlling at least one powered device, the system comprising: a power supplying unit for providing power and Ethernet data; a powered unit being operationally connected to the power supplying unit for receiving power and Ethernet data from the power supplying unit for the operation, the powered unit comprises at least one lighting unit; characterized in that the power supplying unit provides DC power at 50 volts to at least one powered unit; the powered unit comprises one interface for connecting to power supplying unit, at least one interface for one or more external devices, the at least one lighting unit of the powered unit comprises control unit; the system further comprises: a light control and management unit for centralized control and management of the powered unit, the light control and management unit being connected to the power supplying unit over Ethernet network and configured to: a. collect data from the at least one lighting unit of powered unit and the external devices through the control unit of powered device and process the data for the purpose of intelligence gathering and decision making, b. control and manage operations of the at least one powered device based on the collected data, c. control and manage operations of the external devices based on the collected data, d. control and manage operations of the at least one powered device based on the interfaces and applications on the control and management unit, e. control and manage operations of the external devices based on the interfaces and applications on the control and management unit. The system further includes a power and signal carrying unit for enabling data connectivity or power transmission among the power supplying unit, powered unit and light control and management unit.

No. of Pages : 24 No. of Claims : 24

(12) PATENT APPLICATION PUBLICATION
(19) INDIA
(22) Date of filing of Application :30/12/2013
(21) Application No.4121/MUM/2013 A
(43) Publication Date : 31/01/2014

(54) Title of the invention : INSECTICIDE COMPOUND AND THE COMPOSITIONS THEREOF

(51) International classification	:A01N25/06, A01N25/02, A01N25/18
(31) Priority Document No	:NA
(32) Priority Date	:NA
(33) Name of priority country	:NA
(86) International Application No	:NA
Filing Date	:NA
(87) International Publication No	: NA
(61) Patent of Addition to Application Number	:NA
Filing Date	:NA
(62) Divisional to Application Number	:NA
Filing Date	:NA

(71)**Name of Applicant :**
1)SHOGUN ORGANICS LIMITED
Address of Applicant :A-106 KOTIA NIRMAN, NEW LINK ROAD, ANDHERI (WEST), MUMBAI 400 058, MAHARASHTRA, INDIA.
(72)**Name of Inventor :**
1)RAMASWAMY, KALYANARAMAN
2)KALYANARAMAN, AMIT RAMASWAMY
3)HANDE, MANGESH VASUDEO
4)GHARGE, YUVRAJ HANAMANT

(57) Abstract :
The invention disclosed herein relates to insecticide compound and the compositions thereof. Particularly the invention provides insecticidal isomeric composition of 2,3,5,6- tetrafluoro-4-(rnethoxyrnethyl)benzyl 3-(2,2-dichlorovinyl)-2,2-dimethylcyclopropanecarboxylate comprising total trans isomers ranging from 90% to 99.90% and rest being cis isomers. Further it describes process for preparation of said isomeric composition and its use,, as insecticide/pesticide.

No. of Pages : 21 No. of Claims : 9

(12) PATENT APPLICATION PUBLICATION
(19) INDIA
(22) Date of filing of Application :31/12/2013
(21) Application No.4139/MUM/2013 A
(43) Publication Date : 31/01/2014

(54) Title of the invention : PORT DOG/PERIPHERAL DOG TO MONITOR PORTS/ON CHIP PERIPHERALS PRESENT ON MICROCONTROLLER

(51) International classification	:G06F1/00, G06F3/00
(31) Priority Document No	:NA
(32) Priority Date	:NA
(33) Name of priority country	:NA
(86) International Application No	:NA
Filing Date	:NA
(87) International Publication No	: NA
(61) Patent of Addition to Application Number	:NA
Filing Date	:NA
(62) Divisional to Application Number	:NA
Filing Date	:NA

(71)**Name of Applicant :**
1)CHITTARANJAN PRAMOD MAHAJAN
Address of Applicant :FLAT NO: 301, KRUSHNA GALAXY, S.NO. 32/2, NEAR SIDDHI LAWNS, NARHE, PUNE-411041 Maharashtra India
(72)**Name of Inventor :**
1)CHITTARANJAN PRAMOD MAHAJAN
2)RAJSHRI CHITTARANJAN MAHAJAN

(57) Abstract :
The present invention is related with semiconductor microprocessor along with some peripherals used as a microcontroller. The microcontroller has various on chip peripherals, like timers, analogue to digital convertors, counters, LCD drivers, communication peripherals ,etc .Microcontroller also has the ports for inputting as well as outputting the data. The Present invention is useful to monitor ports as well as output of on-chip peripherals. It will act as a floated peripheral which can be connected to the required port or output on chip peripheral. The invention can improve performance of embedded systems by reducing response time, increasing predictability, and reducing power consumption by utilizing PortDog/Peripheral Dog time to time for taking power saving decisions. It will also improve the battery life by reducing power consumption.

No. of Pages : 14 No. of Claims : 4

(12) PATENT APPLICATION PUBLICATION
(19) INDIA
(22) Date of filing of Application :26/09/2013
(21) Application No.3079/MUM/2013 A
(43) Publication Date : 31/01/2014

(54) Title of the invention : HERBAL ANTI-INFLAMMATORY COMPOSITION

(51) International classification	:A61K 36/00, A61P 29/00
(31) Priority Document No	:NA
(32) Priority Date	:NA
(33) Name of priority country	:NA
(86) International Application No	:NA
Filing Date	:NA
(87) International Publication No	: NA
(61) Patent of Addition to Application Number	:NA
Filing Date	:NA
(62) Divisional to Application Number	:NA
Filing Date	:NA

(71)**Name of Applicant :**
1)SHAMKUWAR PRASHANT BABARAO
Address of Applicant :GOVERMENT COLLEGE OF PHARMACY, THIBA PALACE, RATNAGIRI, PIN NO. 415612, MAHARASHTRA, INDIA.
(72)**Name of Inventor :**
1)SHAMKUWAR PRASHANT BABARAO

(57) Abstract :
Inflammation is a defense phenomenon caused by physical trauma, noxious stimuli by chemical agents, heat, antigen-antibody reaction and microbial effect. The signs and symptoms of inflammation include redness, swelling, heat and pain. Currently used antiinflammatory drugs are associated with some severe side effects. Therefore, the development of potent anti-inflammatory drugs with fewer side effects is necessary. In accordance with the present invention provides a product which is herbal antiinflammatory composition (HAC 07) for treating inflammation. The ingredients of the composition are Turmeric, Pudina, Onion and Fenny. Herbal anti-inflammatory composition (HAC 07) produces anti-inflammatory activity may be due to the inhibition of release of histamine, serotonin and kinins. Herbal anti-inflammatory composition (HAC 07) can be used for treating joint pain and back pain, sprains and swelling, minor sports injuries, neck and shoulder pains and pains due to rheumatoid arthritis, osteoarthritis and gout. As the ingredients used in the said composition are easily available at low cost, herbal composition (HAC 07) can be available at minimum price.

No. of Pages : 13 No. of Claims : 7

(12) PATENT APPLICATION PUBLICATION
(19) INDIA
(22) Date of filing of Application :09/01/2014
(21) Application No.84/MUM/2014 A
(43) Publication Date : 31/01/2014

(54) Title of the invention : T2 [T SQUARE] [TRANSFORM TRACTOR]

(51) International classification :B62D49/00
(31) Priority Document No :NA
(32) Priority Date :NA
(33) Name of priority country :NA
(86) International Application No :NA
Filing Date :NA
(87) International Publication No : NA
(61) Patent of Addition to Application Number :NA
Filing Date :NA
(62) Divisional to Application Number :NA
Filing Date :NA

(71)**Name of Applicant :**
1)GAVSANE AKSHAY NITIN
Address of Applicant :OPP. TO SAI MANDIR, SANGRAMNAGAR, AKLUJ 413 101 DISTRICT SOLAPUR Maharashtra India
(72)**Name of Inventor :**
1)GAVSANE AKSHAY NITIN

(57) Abstract :
This invention relates to the field of mechanical assemblies. Particularly this invention relates to tractorjts transformation and an improve tractor.

No. of Pages : 14 No. of Claims : 9

(12) PATENT APPLICATION PUBLICATION
(19) INDIA
(22) Date of filing of Application :01/11/2013
(21) Application No.3484/MUM/2013 A
(43) Publication Date : 31/01/2014

(54) Title of the invention : A PORTABLE STIRRER

(51) International classification	:B01F 5/26, B01F 7/00	(71)**Name of Applicant :** **1)GOEL SCIENTIFIC GLASS WORKS LTD.** Address of Applicant :C-31/A, SARDAR ESTATE, AJWA ROAD, VADODARA - 390 019, GUJARAT, INDIA
(31) Priority Document No	:NA	(72)**Name of Inventor :**
(32) Priority Date	:NA	**1)GOEL HEMANT HARICHARAN**
(33) Name of priority country	:NA	
(86) International Application No	:NA	
Filing Date	:NA	
(87) International Publication No	: NA	
(61) Patent of Addition to Application Number	:NA	
Filing Date	:NA	
(62) Divisional to Application Number	:NA	
Filing Date	:NA	

(57) Abstract :
A portable stirrer for use in laboratories for stirring contents in a laboratory vessel, typically a glass flask, and replace conventional electric stirrers that are heavy and cumbersome to operate. The portable stirrer rests freely on a mouth of the glass flask. The portable comprises a stirring rod, a housing and a supporter coupled to the housing. The housing accommodates a motor and an electrical control unit therein. The stirring rod is coupled to the motor and extends out of the housing. The housing comprises a plurality of buttons to enable users to operate the stirrer. Users can set desired time duration and desired speed of rotation of the stirring rod. The support covers the mouth of the glass flask to prevent hazardous chemical vapours/fumes that may be produced during the stirring of the contents in the glass flask from escaping out of the glass flask.

No. of Pages : 18 No. of Claims : 9

(12) PATENT APPLICATION PUBLICATION
(19) INDIA
(22) Date of filing of Application :19/03/2013
(21) Application No.844/MUM/2013 A
(43) Publication Date : 31/01/2014

(54) Title of the invention : UNDER LIQUID ELECTRICITY PRODUCTION SYSTEM

(51) International classification :F17C9/04
(31) Priority Document No :NA
(32) Priority Date :NA
(33) Name of priority country :NA
(86) International Application No :PCT// /
Filing Date :01/01/1900
(87) International Publication No : NA
(61) Patent of Addition to Application Number :NA
Filing Date :NA
(62) Divisional to Application Number :NA
Filing Date :NA

(71)**Name of Applicant :**
1)Naidu Ranganathan
Address of Applicant :B-1 , Harishchandra Smruti Near Kurla Nagrik Bank Gavanpada, Mulund (East) Mumbai -400081, Maharashtra India
2)RajalakshmiNaidu
(72)**Name of Inventor :**
1)Naidu Ranganathan

(57) Abstract :
The use of mass of any liquid substance in cyclic order to capture its Kinetic Energy and Potential energy to produce Energy due to its relative motion and its molecular strength to resist and move any foreign object for the purpose of creating empty space inside its enclosed environment without involving any phase change or degradation will create an Energy production system which can run indefinitely without any additional mass input and any waste output.

No. of Pages : 96 No. of Claims : 10

(12) PATENT APPLICATION PUBLICATION
(19) INDIA
(22) Date of filing of Application :04/02/2013
(21) Application No.485/CHE/2013 A
(43) Publication Date : 31/01/2014

(54) Title of the invention : A METHOD FOR PREPARING MONOLAYER PROTECTED SILVER CLUSTERS AS ANTIBACTERIAL AGENTS

(51) International classification :C23C18/00
(31) Priority Document No :NA
(32) Priority Date :NA
(33) Name of priority country :NA
(86) International Application No :NA
Filing Date :NA
(87) International Publication No : NA
(61) Patent of Addition to Application Number :NA
Filing Date :NA
(62) Divisional to Application Number :NA
Filing Date :NA

(71)**Name of Applicant :**
1)INDIAN INSTITUTE OF TECHNOLOGY MADRAS
Address of Applicant :IIT P.O., CHENNAI - 600 036 Tamil Nadu India
(72)**Name of Inventor :**
1)THALAPPIL PRADEEP
2)INDRANATH CHAKRABORTY
3)THUMU UDAYABHASKARARAO
4)DEEPESH GOPALAKRISHNAN

(57) Abstract :
The present invention relates to a method for preparing monolayer protected, atomically precise silver clusters as antibacterial agents.

No. of Pages : 39 No. of Claims : 10

(12) PATENT APPLICATION PUBLICATION
(19) INDIA
(22) Date of filing of Application :17/01/2014
(21) Application No.201/CHE/2014 A
(43) Publication Date : 31/01/2014

(54) Title of the invention : THE CNS APPARATUS WITH INFORMATION VISUALIZATION ON LARGE DISPLAY

(51) International classification :G06F19/00
(31) Priority Document No :NA
(32) Priority Date :NA
(33) Name of priority country :NA
(86) International Application No :NA
Filing Date :NA
(87) International Publication No : NA
(61) Patent of Addition to Application Number :NA
Filing Date :NA
(62) Divisional to Application Number :NA
Filing Date :NA

(71)**Name of Applicant :**
1)SKANRAY HEALTHCARE PVT. LTD.
Address of Applicant :PLOT NO. 360, KIADB INDUSTRIAL AREA, HEBBAL, MYSORE, PIN 570 018 Karnataka India
(72)**Name of Inventor :**
1)NAGARAJAN, RAVINDRAN

(57) Abstract :
The present invention provides a central nursing system for remote monitoring the physiological parameters of the patients/victims. The present invention provides continuous expert - network critical care services from a remote location. The central nursing system for remote monitoring the physiological parameter(s) of the patient(s)/victim(s), the central nursing system comprising: a remote server (100) for streaming the vital signs of patient from remote area to a central nursing station (158) for monitoring; a patient monitor(s) (136, 138, 140, 142, 144)connected to patient(s) using a cable/ sensor (126, 128, 130, 132, 134)for displaying the physiological parameter(s) of the patient(s)/ victim(s); a network router switch (146) connected to the patient monitor(s) (136, 138, 140, 142, 144) for collecting the physiological parameter(s) of the patient(s)/victim(s) and transmitting the physiological parameter(s) to the central nursing station after multiplexing by using a cable(152). A public address module (148) is connected to the central nursing station (158) for announcing the instruction related to patient(s)/victim(s) and a workstation system connecting to the central nursing station through a LAN cable (162) for accessing a confidential information of the patient(s)/victim(s). The central nursing system provides remote monitoring of the patients by caregiver(s) thereby ensuring timely and accurate diagnosis.

No. of Pages : 50 No. of Claims : 18

(12) PATENT APPLICATION PUBLICATION
(19) INDIA
(22) Date of filing of Application :07/09/2012
(21) Application No.7728/CHENP/2012 A
(43) Publication Date : 31/01/2014

(54) Title of the invention : METHOD DEVICE AND SYSTEM FOR COMMUNICATION BETWEEN DOUBLE CENTRAL PROCESSING UNITS

(51) International classification :H04W 76/02
(31) Priority Document No :201010158687.3
(32) Priority Date :21/04/2010
(33) Name of priority country :China
(86) International Application No :PCT/CN2011/072987
Filing Date :19/04/2011
(87) International Publication No : NA
(61) Patent of Addition to Application Number :NA
Filing Date :NA
(62) Divisional to Application Number :NA
Filing Date :NA

(71)**Name of Applicant :**
1)HUAWEI DEVICE CO. LTD.
Address of Applicant :Building B2 Huawei Industrial Base Bantian Longgang District Shenzhen 518129 China
(72)**Name of Inventor :**
1)ZHENG Jianbing

(57) Abstract :
Embodiments of the present invention provide a method a device and a system for communication between double central processing units which relates to the field of mobile communications technologies. An embodiment of the present invention provides a method for communication between double central processing units where the method includes: receiving by a baseband function module a baseband function invocation request message sent by an application function module through a service channel and a virtual channel where the baseband function invocation request message carries a virtual channel identifier and the virtual channel identifier corresponds to the virtual channel; and in response to the baseband function invocation request message returning by the baseband function module a baseband function invocation response message to the application function module where the baseband function invocation response message carries the virtual channel identifier.

No. of Pages : 30 No. of Claims : 20

(12) PATENT APPLICATION PUBLICATION
(19) INDIA
(22) Date of filing of Application :07/02/2013
(21) Application No.525/CHE/2013 A
(43) Publication Date : 31/01/2014

(54) Title of the invention : WATER FILLED ORGANIC TEMPLATED METAL OXIDE/HYDROXIDE/OXYHYDROXIDE PARTICLE NETWORK FOR WATER PURIFICATION AND A DEVICE THEREOF

(51) International classification	:C02F1/00
(31) Priority Document No	:NA
(32) Priority Date	:NA
(33) Name of priority country	:NA
(86) International Application No	:NA
Filing Date	:NA
(87) International Publication No	: NA
(61) Patent of Addition to Application Number	:NA
Filing Date	:NA
(62) Divisional to Application Number	:NA
Filing Date	:NA

(71)**Name of Applicant :**
1)INDIAN INSTITUTE OF TECHNOLOGY MADRAS
Address of Applicant :IIT P.O., CHENNAI - 600 036 Tamil Nadu India
(72)**Name of Inventor :**
1)THALAPPIL PRADEEP
2)MOHAN UDHAYA SANKAR
3)ANSHUP
4)AVULA ANIL KUMAR
5)CHAUDHARY AMRITA

(57) Abstract :
The present invention discloses a method for preparation of adsorbent composition comprising of water insoluble aggregated nanoparticle network of organic polymer templated metal oxide/hydroxide/oxyhydroxide containing more than 90% water content, wherein the adsorbent composition is used for the rapid removal of contaminants from drinking water. Utility of adsorbent composition to remove a wide variety of contaminants is demonstrated. The present invention discloses a filtration device which removes specific contaminants from a fluid at high flow rate.

No. of Pages : 33 No. of Claims : 20

(12) PATENT APPLICATION PUBLICATION
(19) INDIA
(22) Date of filing of Application :20/12/2013
(21) Application No.5988/CHE/2013 A
(43) Publication Date : 31/01/2014

(54) Title of the invention : DECHLORINATION OF LINDANE AND ITS REMOVAL FROM WATER BY GRAPHENE NANOCOMPOSITES

(51) International classification :C02F1/00
(31) Priority Document No :NA
(32) Priority Date :NA
(33) Name of priority country :NA
(86) International Application No :NA
Filing Date :NA
(87) International Publication No : NA
(61) Patent of Addition to Application Number :NA
Filing Date :NA
(62) Divisional to Application Number :NA
Filing Date :NA

(71)**Name of Applicant :**
1)INDIAN INSTITUTE OF TECHNOLOGY MADRAS
Address of Applicant :IIT P.O, CHENNAI - 600 036 Tamil Nadu India
(72)**Name of Inventor :**
1)PRADEEP THALAPPIL
2)SOUJIT SENGUPTA
3)INDRANATH CHAKRABORTY
4)SHIHABUDHEEN MUNDAMPRA MALIYEKKAL

(57) Abstract :
The present invention relates to the degradation / dechlorination of lindane and its removal from water by graphene nanocomposites.

No. of Pages : 30 No. of Claims : 6

(12) PATENT APPLICATION PUBLICATION
(19) INDIA
(22) Date of filing of Application :30/12/2013
(21) Application No.6137/CHE/2013 A
(43) Publication Date : 31/01/2014

(54) Title of the invention : MOLECULAR IONIZATION FROM CARBON NANOTUBE PAPER

(51) International classification :H01J49/00
(31) Priority Document No :NA
(32) Priority Date :NA
(33) Name of priority country :NA
(86) International Application No :NA
Filing Date :NA
(87) International Publication No : NA
(61) Patent of Addition to Application Number :NA
Filing Date :NA
(62) Divisional to Application Number :NA
Filing Date :NA

(71)**Name of Applicant :**
1)INDIAN INSTITUTE OF TECHNOLOGY MADRAS
Address of Applicant :IIT P.O, CHENNAI - 600 036 Tamil Nadu India
(72)**Name of Inventor :**
1)PRADEEP THALAPPIL
2)RAHUL NARAYANAN
3)DEPANJAN SARKAR

(57) Abstract :
The present invention relates to ambient ionization from impregnated / coated paper source for mass spectrometry and methods thereof. The said impregnations / coatings are achieved using carbon nanotubes (CNTs). The CNT-impregnated paper is used to generate ions from organic molecules at potentials as low as 3V. Further the present invention demonstrates the possibility of analytical mass spectrometry with a battery.

No. of Pages : 25 No. of Claims : 10

Publication After 18 Months:

The following Patent Applications have been published under Section 11A (3) of The Patents (Amendment) Act, 2005. Any Person may file representation by way of opposition to the Controller of Patents at the appropriate office against the grant of the patent in the prescribed manner under section 25(1) of the Patents (Amendment) Act, 2005 read with the rule 55 of The Patents (Amendment) Rules, 2006:

(12) PATENT APPLICATION PUBLICATION

(21) Application No.1744/DEL/2012 A

(19) INDIA

(22) Date of filing of Application :07/06/2012

(43) Publication Date : 31/01/2014

(54) Title of the invention : A NOVEL MICROBIAL FUEL CELL

(51) International classification	:C12Q	(71)**Name of Applicant :**
(31) Priority Document No	:NA	**1)MATHURIYA, ABHILASHA SINGH**
(32) Priority Date	:NA	Address of Applicant :C/O SMT LATESH KUMARI
(33) Name of priority country	:NA	SHASTRI NAGAR, RAILWAY ROAD KAMALGANJ,
(86) International Application No	:NA	FARRUKHABAD UTTAR PRADESH-209724 India
Filing Date	:NA	(72)**Name of Inventor :**
(87) International Publication No	: NA	**1)MATHURIYA, ABHILASHA SINGH**
(61) Patent of Addition to Application Number	:NA	
Filing Date	:NA	
(62) Divisional to Application Number	:NA	
Filing Date	:NA	

(57) Abstract :

A novel Microbial Fuel Cell (MFC) that generates electricity from wastewater, that comprise of plurality of anode compartment which are attached to a cathode chamber (Figure 1). Plain carbon rods act as anode and graphite plates as cathode electrode in Anode compartment and cathode chambers. Anode chambers are filled with wastewater and are flushed with nitrogen and carbon dioxide to maintain anaerobic conditions. Cathode chamber which is aerobic chamber is filled with phosphate buffer. Wastewater is added to this arrangement which act as electrolyte; working of the cell is based on assumption that the anode serves as the depository of electrons during the redox reaction and multiple surface area of anode shall enhance the electricity generation due to more electrolyte consumption in given time frame.

No. of Pages : 28 No. of Claims : 7

(12) PATENT APPLICATION PUBLICATION
(19) INDIA
(22) Date of filing of Application :18/07/2012
(21) Application No.2214/DEL/2012 A
(43) Publication Date : 31/01/2014

(54) Title of the invention : PROCESS CONTROL SYSTEM

(51) International classification :G05B
(31) Priority Document No :10 2011 108 003.5
(32) Priority Date :19/07/2011
(33) Name of priority country :Germany
(86) International Application No :NA
Filing Date :NA
(87) International Publication No : NA
(61) Patent of Addition to Application Number :NA
Filing Date :NA
(62) Divisional to Application Number :NA
Filing Date :NA

(71)**Name of Applicant :**
1)ABB TECHNOLOGY AG
Address of Applicant :Affolternstrasse 44 CH-8050 Zurich Switzerland
(72)**Name of Inventor :**
1)GERD DEWITZ
2)GUNNAR PRYTZ
3)MICHAEL GIENKE
4)RAGNAR SCHIERHOLZ
5)STEFAN BOLLMEYER
6)THOMAS PAULY

(57) Abstract :
The invention relates to a process control system consisting of a plurality of spatially distributed, internetworked network subscribers (1, 2, 3, 4) with secure communication between the network subscribers (1, 2, 3, 4) via a communication network (6), the communication integrity being based on the interchange of certificates (7). In order to protect the communication integrity, it is proposed to provide the process control system with a central certification point (5) which is an integral part of the process control system and allocates and distributes certificates (7).

No. of Pages : 19 No. of Claims : 20

(12) PATENT APPLICATION PUBLICATION
(19) INDIA
(22) Date of filing of Application :23/07/2012
(21) Application No.2275/DEL/2012 A
(43) Publication Date : 31/01/2014

(54) Title of the invention : ADAPTER, CAMERA SYSTEM, AND ADAPTER CONTROL PROGRAM

(51) International classification :G03B
(31) Priority Document No :2011-161387
(32) Priority Date :22/07/2011
(33) Name of priority country :Japan
(86) International Application No :NA
Filing Date :NA
(87) International Publication No : NA
(61) Patent of Addition to Application Number :NA
Filing Date :NA
(62) Divisional to Application Number :NA
Filing Date :NA

(71)**Name of Applicant :**
1)NIKON CORPORATION
Address of Applicant :12-1, YURAKUCHO 1-CHOME, CHIYODA-KU, TOKYO, JAPAN
(72)**Name of Inventor :**
1)HASUDA, MASANORI
2)OIKAWA, MASAFUMI
3)NAKAJIMA, NORIAKI
4)NAGAYA, SHUNJI

(57) Abstract :
An adapter includes: a first mount section that is detachably attached to a camera body; a second mount section that is provided separately from the first mount section and is detachably attached to any one of a plurality of types of interchangeable lenses which are different from each other in a method of controlling a diaphragm; and an accessory control section that controls the diaphragm of the interchangeable lens in response to a common control command which is received from the camera body regardless of the type of the interchangeable lens mounted on the second mount section.

No. of Pages : 224 No. of Claims : 7

(12) PATENT APPLICATION PUBLICATION
(19) INDIA
(22) Date of filing of Application :23/07/2012
(21) Application No.2276/DEL/2012 A
(43) Publication Date : 31/01/2014

(54) Title of the invention : CAMERA SYSTEM, ACCESSORY, CAMERA, CAMERA SYSTEM CONTROL PROGRAM, ACCESSORY CONTROL PROGRAM, AND CAMERA CONTROL PROGRAM

(51) International classification :G03B
(31) Priority Document No :2011-161361
(32) Priority Date :22/07/2011
(33) Name of priority country :Japan
(86) International Application No :NA
Filing Date :NA
(87) International Publication No : NA
(61) Patent of Addition to Application Number :NA
Filing Date :NA
(62) Divisional to Application Number :NA
Filing Date :NA

(71)**Name of Applicant :**
1)NIKON CORPORATION
Address of Applicant :12-1, YURAKUCHO 1-CHOME, CHIYODA-KU, TOKYO, JAPAN
(72)**Name of Inventor :**
1)IDE, YUSUKE
2)IMAFUJI, KAZUHARU

(57) Abstract :
A camera system includes an image capture section, a positioning section that performs positioning and a control section that controls the positioning section. The control section causes at least one operation of the positioning section and the control section to transition to a power saving mode, while the image capture section continues a predetermined operation.

No. of Pages : 256 No. of Claims : 13

(12) PATENT APPLICATION PUBLICATION
(19) INDIA
(22) Date of filing of Application :23/07/2012
(21) Application No.2277/DEL/2012 A
(43) Publication Date : 31/01/2014

(54) Title of the invention : ADAPTER, CAMERA SYSTEM, AND ADAPTER CONTROL PROGRAM

(51) International classification :G03B
(31) Priority Document No :2011-160840
(32) Priority Date :22/07/2011
(33) Name of priority country :Japan
(86) International Application No :NA
Filing Date :NA
(87) International Publication No : NA
(61) Patent of Addition to Application Number :NA
Filing Date :NA
(62) Divisional to Application Number :NA
Filing Date :NA

(71)**Name of Applicant :**
1)NIKON CORPORATION
Address of Applicant :12-1, YURAKUCHO 1-CHOME, CHIYODA-KU, TOKYO, JAPAN
(72)**Name of Inventor :**
1)SUGIYAMA, HIDEAKI
2)TAGUCHI, FUMIYA
3)HASUDA, MASANORI
4)OIKAWA, MASAFUMI
5)NAKAJIMA, NORIAKI
6)NAGAYA, SHUNJI

(57) Abstract :
An adapter includes: a first mount section that is detachably attached to a camera body; a second mount section that is provided separately from the first mount section and is detachably attached to an interchangeable lens; and a power supply section that generates supply voltages of a third power supply system and a fourth power supply system, which are to be fed to the interchangeable lens mounted on the second mount section, from a second power supply system between a first power supply system of the camera body, which is mounted on the first mount section, and the second power supply system which is different from the first power supply system.

No. of Pages : 157 No. of Claims : 39

(12) PATENT APPLICATION PUBLICATION
(19) INDIA
(22) Date of filing of Application :18/07/2012
(21) Application No.2219/DEL/2012 A
(43) Publication Date : 31/01/2014

(54) Title of the invention : ULTRASOUND DIAGNOSTIC APPARATUS AND METHOD THEREOF

(51) International classification :G01N
(31) Priority Document No :2011-165000
(32) Priority Date :28/07/2011
(33) Name of priority country :Japan
(86) International Application No :NA
Filing Date :NA
(87) International Publication No : NA
(61) Patent of Addition to Application Number :NA
Filing Date :NA
(62) Divisional to Application Number :NA
Filing Date :NA

(71)**Name of Applicant :**
1)GE MEDICAL SYSTEMS GLOBAL TECHNOLOGY COMPANY, LLC
Address of Applicant :3000 NORTH GRANDVIEW BOULEVARD WAUKESHA, WI 53188-1696, U.S.A.
(72)**Name of Inventor :**
1)TANIGA WA, SHUNICHIRO

(57) Abstract :
An ultrasound diagnostic apparatus (1) includes a physical quantity calculating unit (5) which calculates a physical quantity related to elasticity of biological tissue, based on echo signals obtained by transmission/reception of ultrasound to and from a subject, and a three-dimensional elastic image data generating unit (66) which generates three-dimensional elastic image data by volume rendering processing for projecting data related to the physical quantity in a three-dimensional region of the subject in a predetermined visual line direction to thereby obtain data of respective pixels on a projection plane. The three-dimensional elastic image data generating unit (66) obtains data corresponding to the number of data related to the physical quantity in a prescribed range of elasticity in the visual line direction as the data of the respective pixels.

No. of Pages : 39 No. of Claims : 16

(12) PATENT APPLICATION PUBLICATION
(19) INDIA
(22) Date of filing of Application :23/07/2012
(21) Application No.2280/DEL/2012 A
(43) Publication Date : 31/01/2014

(54) Title of the invention : HEAT DISSIPATION STRUCTURE FOR INDUCTION COOKER

(51) International classification :F24C
(31) Priority Document No :201120550925.5
(32) Priority Date :26/12/2011
(33) Name of priority country :China
(86) International Application No :NA
Filing Date :NA
(87) International Publication No : NA
(61) Patent of Addition to Application Number :NA
Filing Date :NA
(62) Divisional to Application Number :NA
Filing Date :NA

(71)**Name of Applicant :**
1)MIDEA GROUP CO., LTD.
Address of Applicant :NO. 6, MIDEA ROAD, SHUNDE DISTRICT, FOSHAN CITY GUANGDONG PROVINCE 528311, CHINA
(72)**Name of Inventor :**
1)SU, JIAONENG
2)LI, XINFENG
3)WU, ZHIYONG
4)LIANG, JIANMIN

(57) Abstract :
A heat dissipation structure for induction cooker is provided, which comprises a top cover, a base, an air inlet, an air outlet and a fan, with the fan being mounted on the base. The air inlet is provided in an area of the base that is beyond the orthographic projection of the fan. In one aspect, because the air inlet is not disposed below the fan and keeps a sufficient distance from the latter, water is prevented from being sucked into the base. In another aspect, no network cover is necessary in the present invention, thus the rotating speed of the fan can be increased so as to ensure dissipation efficiency and in the meanwhile, the noise of the induction cooker can be greatly reduced.

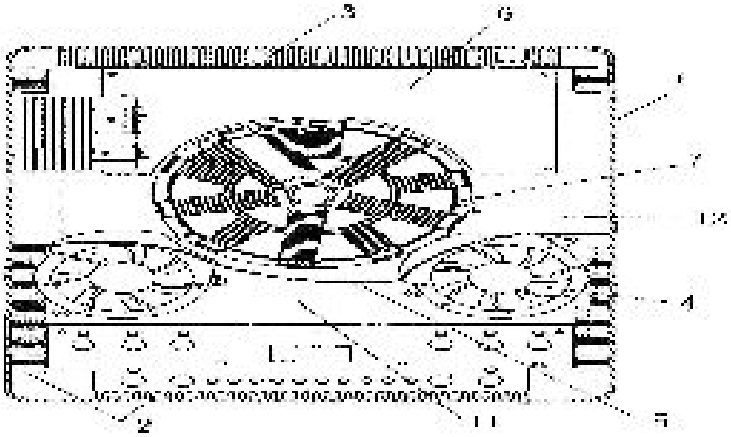

No. of Pages : 13 No. of Claims : 10

(12) PATENT APPLICATION PUBLICATION
(19) INDIA
(22) Date of filing of Application :23/07/2012

(21) Application No.2281/DEL/2012 A
(43) Publication Date : 31/01/2014

(54) Title of the invention : A METHOD FOR AUTOMATICALLY DETECTING POT ABNORMALITIES FOR INDUCTION COOKER

(51) International classification :F24C
(31) Priority Document No :201110447164.5
(32) Priority Date :28/12/2011
(33) Name of priority country :China
(86) International Application No :NA
Filing Date :NA
(87) International Publication No : NA
(61) Patent of Addition to Application Number :NA
Filing Date :NA
(62) Divisional to Application Number :NA
Filing Date :NA

(71)**Name of Applicant :**
1)MIDEA GROUP CO., LTD.
Address of Applicant :NO. 6, MIDEA ROAD, SHUNDE DISTRICT, FOSHAN CITY, GUANGDONG PROVICE 528311, CHINA
(72)**Name of Inventor :**
1)LI, BAOGANG
2)ZENG, YANXIA
3)YUE, JIAN

(57) Abstract :
A method for automatically detecting pot abnormalities for induction cooker is provided. The induction cooker comprises a microprocessor control unit (MCU), a timer, and at least two temperature sensors provided to detect temperatures at different heating areas on the panel. A temperature threshold value and a presetting time TO are predetermined in the MCU. The method comprises steps of (a) starting the timer when the induction cooker starts to work, and collecting AD values for each of the temperature sensors by using the MCU when the time counted by the timer is in excess of the presetting time TO; (b) comparing the AD values collected with each other to obtain a maximum value, and subtracting the maximum value by each of the remaining AD values to obtain a group of temperature difference values; and (c) comparing each of the temperature difference values with the temperature threshold value, if one or more of the temperature difference values is found greater than the temperature threshold value, an abnormality is considered to exist and the MCU takes actions; if none of the temperature difference values is greater than the temperature threshold value, return to step (b).

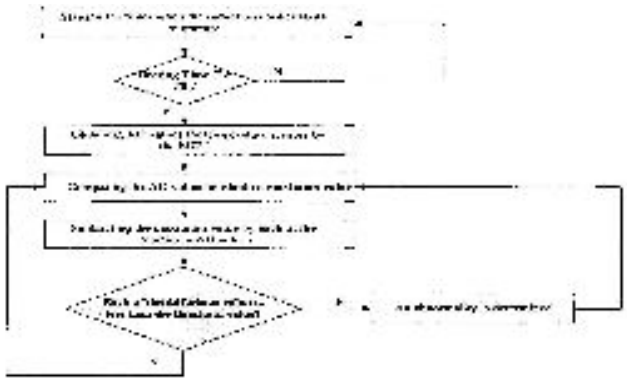

No. of Pages : 7 No. of Claims : 3

(12) PATENT APPLICATION PUBLICATION
(19) INDIA
(22) Date of filing of Application :23/07/2012
(21) Application No.2282/DEL/2012 A
(43) Publication Date : 31/01/2014

(54) Title of the invention : MAXIMUM POWER POINT TRACKING FOR POWER CONVERSION SYSTEM AND METHOD THEREOF

(51) International classification :G05F
(31) Priority Document No :201110217137.9
(32) Priority Date :29/07/2011
(33) Name of priority country :China
(86) International Application No :NA
Filing Date :NA
(87) International Publication No : NA
(61) Patent of Addition to Application Number :NA
Filing Date :NA
(62) Divisional to Application Number :NA
Filing Date :NA

(71)**Name of Applicant :**
1)GENERAL ELECTRIC COMPANY
Address of Applicant :1 RIVER ROAD, SCHENECTADY, NEW YORK 12345, U.S.A.
(72)**Name of Inventor :**
1)TAN, ZHUOHUI
2)WU, XUEQIN
3)WU, XINHUI
4)GONG, MAOZHONG

(57) Abstract :
An exemplary power conversion system comprises an MPPT unit, a DC bus, a power converter, and a converter controller. The MPPT unit receives a feedback current signal and a feedback voltage signal from a power source and generates an MPPT reference signal based at least in part on the feedback current and voltage signals. The DC bus receives DC power from the power source. The power converter converts the DC power on the DC bus to AC power. The converter controller receives the MPPT reference signal from the MPPT unit and an output power feedback signal measured at an output of the power converter; generates control signals for AC power regulation and maximum power extraction based at least in part on the MPPT reference signal and the output power feedback signal; and sends the control signals to the power converter.

No. of Pages : 37 No. of Claims : 20

(12) PATENT APPLICATION PUBLICATION
(19) INDIA
(22) Date of filing of Application :18/07/2012
(21) Application No.2223/DEL/2012 A
(43) Publication Date : 31/01/2014

(54) Title of the invention : SYSTEM AND METHODS FOR AUTOMATED TRIAGE AND SCHEDULING IN AN EMERGENCY DEPARTMENT

(51) International classification :G06F
(31) Priority Document No :13/194,495
(32) Priority Date :29/07/2011
(33) Name of priority country :U.S.A.
(86) International Application No :NA
Filing Date :NA
(87) International Publication No : NA
(61) Patent of Addition to Application Number :NA
Filing Date :NA
(62) Divisional to Application Number :NA
Filing Date :NA

(71)**Name of Applicant :**
1)GENERAL ELECTRIC COMPANY
Address of Applicant :1 RIVER ROAD, SCHENECTADY, NEW YORK 12345, U.S.A.
(72)**Name of Inventor :**
1)BAGWANDEEN, HANIF GEORGE
2)CARROLL, ALEXANDER KABER

(57) Abstract :
Systems and methods for automated triage and scheduling in an emergency department are described. An example computer-implemented method of automatically triaging and scheduling patients in an emergency department includes associating a patient with an identification bracelet and processing the patient using a patient evaluation device. The processing includes obtaining patient data with the patient evaluation device and dynamically determining a risk level associated with the patient based on the patient data obtained. The method also includes automatically prioritizing and scheduling the patient with a healthcare practitioner based on the risk level determined.

No. of Pages : 35 No. of Claims : 22

(12) PATENT APPLICATION PUBLICATION
(19) INDIA
(22) Date of filing of Application :18/07/2012
(21) Application No.2225/DEL/2012 A
(43) Publication Date : 31/01/2014

(54) Title of the invention : ACOUSTIC DAMPENING DEVICE FOR USE IN GAS TURBINE ENGINE

(51) International classification :G10K
(31) Priority Document No :13/207,074
(32) Priority Date :10/08/2011
(33) Name of priority country :U.S.A.
(86) International Application No :NA
Filing Date :NA
(87) International Publication No : NA
(61) Patent of Addition to Application Number :NA
Filing Date :NA
(62) Divisional to Application Number :NA
Filing Date :NA

(71)**Name of Applicant :**
1)GENERAL ELECTRIC COMPANY
Address of Applicant :1 RIVER ROAD, SCHENECTADY, NEW YORK 12345, U.S.A.
(72)**Name of Inventor :**
1)WANG, SHANWU
2)MUELLER, MARK ANTHONY
3)HAN, FEI

(57) Abstract :
An acoustic dampener comprises a first wall, orifice plate, and second wall. The first wall separates a first fluid source from a second fluid source. The first wall has a hole for allowing fluid communication between the first fluid source and a first cavity of the acoustic dampener. The office plate separates the first cavity of the acoustic dampener from a second cavity of the acoustic dampener. The second wall has a hole for allowing fluid communication between the first cavity of the acoustic dampener in the second cavity of the acoustic dampener. The second wall separates the second cavity of the acoustic dampener from the second fluid source. The second wall has a hole for allowing fluid communication between the second cavity of the acoustic dampener and the second fluid source. In one embodiment, the acoustic dampener is formed in a combustion chamber liner of a gas turbine engine.

No. of Pages : 18 No. of Claims : 7

(12) PATENT APPLICATION PUBLICATION
(19) INDIA
(22) Date of filing of Application :24/07/2012
(21) Application No.2289/DEL/2012 A
(43) Publication Date : 31/01/2014

(54) Title of the invention : POWER CONVERSION SYSTEM WITH TRANSIENT EVENT RIDE-THROUGH CAPABILITY AND METHOD THEREOF

(51) International classification :H02J
(31) Priority Document No :201110217135.X
(32) Priority Date :29/07/2011
(33) Name of priority country :China
(86) International Application No :NA
Filing Date :NA
(87) International Publication No : NA
(61) Patent of Addition to Application Number :NA
Filing Date :NA
(62) Divisional to Application Number :NA
Filing Date :NA

(71)**Name of Applicant :**
1)GENERAL ELECTRIC COMPANY
Address of Applicant :1 RIVER ROAD, SCHENECTADY, NEW YORK 12345, U.S.A.
(72)**Name of Inventor :**
1)TAN, ZHUOHUI
2)WU, XUEQIN
3)WU, XINHUI
4)GONG, MAOZHONG
5)GUO, XIAOMING

(57) Abstract :
An exemplary power conversion system is disclosed including a DC bus for receiving DC power; a line side converter electrically coupled to the DC bus for converting the DC power to AC power; and a voltage source controller to provide control signals to enable the line side converter to regulate the AC power. The voltage source controller comprises a signal generator to generate the control signals based at least in part on a power command signal and a power feedback signal. The voltage source controller further comprises a current limiter to, during a transient event, limit the control signals based at least in part on an electrical current threshold. The voltage source controller further comprises a voltage limiter to, during the transient event, limit the control signals based at least in part on a DC bus voltage feedback signal and a DC boundary voltage threshold.

No. of Pages : 50 No. of Claims : 20

(12) PATENT APPLICATION PUBLICATION
(19) INDIA
(22) Date of filing of Application :24/07/2012
(21) Application No.6508/DELNP/2012 A
(43) Publication Date : 31/01/2014

(54) Title of the invention : HIGH-STRENGTH COLD-ROLLED STEEL SHEET AND PROCESS FOR PRODUCTION THEREOF

(51) International classification :C22C 38/00
(31) Priority Document No :2010-014363
(32) Priority Date :26/01/2010
(33) Name of priority country :Japan
(86) International Application No :PCT/JP2011/051459
Filing Date :26/01/2011
(87) International Publication No : NA
(61) Patent of Addition to Application Number :NA
Filing Date :NA
(62) Divisional to Application Number :NA
Filing Date :NA

(71)**Name of Applicant :**
1)NIPPON STEEL & SUMITOMO METAL CORPORATION
Address of Applicant :6-1, MARUNOUCHI 2-CHOME, CHIYODA-KU, TOKYO 100-8071, JAPAN
(72)**Name of Inventor :**
1)KOHICHI SANO
2)CHISATO WAKABAYASHI
3)HIROYUKI KAWATA
4)RIKI OKAMOTO
5)NAOKI YOSHINAGA
6)KAORU KAWASAKI
7)NATSUKO SUGIURA
8)NOBUHIRO FUJITA

(57) Abstract :
A high-strength cold-rolled steel sheet includes, by mass%, C: 0.10% to 0.40%, Mn: 0.5% to 4.0%, Si: 0.005% to 2.5%, A]: 0.005% to 2.5%, Cr: 0% to 1.0%, and a balance of iron and inevitable impurities, in which an amount of P is limited to 0.05% or less, an amount of S is limited to 0.02% or less, an amount of N is limited to 0.006% or less, the microstructure includes 2% to 30% of retained austenite by area percentage, martensite is limited to 20% or less by area percentage in the microstructure, an average particle size of cementite is 0.01 μm to 1 μm, and 30% to 100% of the cementite has an aspect ratio of I to 3.

No. of Pages : 76 No. of Claims : 19

(12) PATENT APPLICATION PUBLICATION
(19) INDIA
(22) Date of filing of Application :19/07/2012
(21) Application No.2250/DEL/2012 A
(43) Publication Date : 31/01/2014

(54) Title of the invention : POWER PLANT AND CONTROL METHOD

(51) International classification :F02C
(31) Priority Document No :13/217727
(32) Priority Date :25/08/2011
(33) Name of priority country :U.S.A.
(86) International Application No :NA
Filing Date :NA
(87) International Publication No : NA
(61) Patent of Addition to Application Number :NA
Filing Date :NA
(62) Divisional to Application Number :NA
Filing Date :NA

(71)**Name of Applicant :**
1)GENERAL ELECTRIC COMPANY
Address of Applicant :1 RIVER ROAD, SCHENECTADY, NEW YORK 12345, U.S.A.
(72)**Name of Inventor :**
1)MINTO, KARL DEAN

(57) Abstract :
Ambient air is compressed into a compressed ambient gas flow (26) with a main air compressor (12). The compressed ambient gas flow (26) having a compressed ambient gas flow rate is delivered to a turbine combustor (32) and mixed with a fuel stream (28) having a fuel stream flow rate and a portion of a recirculated gas flow (50) to form a combustible mixture. The combustible mixture is burned and forms the recirculated gas flow (50) that drives a turbine (34). The recirculated gas flow (50) is recirculated from the turbine (34) to the turbine compressor (30) using a recirculation loop (52). At least one emission level is measured by a first emission sensor (53) in the recirculated gas flow (50) and a first control signal is generated. The fuel stream flow rate is adjusted based on the at least a first control signal to achieve substantially stoichiometric combustion.

No. of Pages : 66 No. of Claims : 10

(12) PATENT APPLICATION PUBLICATION
(19) INDIA
(22) Date of filing of Application :24/07/2012
(21) Application No.6510/DELNP/2012 A
(43) Publication Date : 31/01/2014

(54) Title of the invention : COMPLEX OXIDE METHOD FOR PRODUCING SAME AND EXHAUST GAS PURIFYING CATALYST

(51) International classification :C01F 17/00
(31) Priority Document No :2009-294338
(32) Priority Date :25/12/2009
(33) Name of priority country :Japan
(86) International Application No :PCT/JP2010/073306
Filing Date :24/12/2010
(87) International Publication No : NA
(61) Patent of Addition to Application Number :NA
Filing Date :NA
(62) Divisional to Application Number :NA
Filing Date :NA

(71)**Name of Applicant :**
1)ANAN KASEI CO. LTD.
Address of Applicant :210-51 Ohgata-cho Anan-shi Tokushima 774-0022 Japan
(72)**Name of Inventor :**
1)NAOTAKA OHTAKE
2)KAZUHIKO YOKOTA

(57) Abstract :
Disclosed are: a complex oxide which has excellent heat resistance and excellent catalytic activity and is capable of maintaining high pore volume even if used in a high temperature environment; a method for producing the complex oxide; and an exhaust gas purifying catalyst which uses the complex oxide. Specifically disclosed is a complex oxide which contains cerium and at least one element selected from aluminum, silicon and rare earth metals including yttrium but not including cerium, at a mass ratio within the range from 85:15 to 99:1 in terms of oxides. The complex oxide has physical properties such that the volume of pores having a pore diameter of 200 nm or less after 5-hour firing at 900°C is not less than 0.30 cm3/g, preferably not less than 0.40 cm3/g. In particular, the complex oxide is suitable as a promoter for an exhaust gas purifying catalyst that is used in an automobile or the like.

No. of Pages : 29 No. of Claims : 9

(12) PATENT APPLICATION PUBLICATION
(19) INDIA
(22) Date of filing of Application :24/07/2012
(21) Application No.6511/DELNP/2012 A
(43) Publication Date : 31/01/2014

(54) Title of the invention : METHODS FOR OPERATING A POLYMERIZATION REACTOR

(51) International classification :C08F 10/00
(31) Priority Document No :61/305,623
(32) Priority Date :18/02/2010
(33) Name of priority country :U.S.A.
(86) International Application No :PCT/US2011/025231
Filing Date :17/02/2011
(87) International Publication No : NA
(61) Patent of Addition to Application Number :NA
Filing Date :NA
(62) Divisional to Application Number :NA
Filing Date :NA

(71)**Name of Applicant :**
1)UNIVATION TECHNOLOGIES LLC
Address of Applicant :5555 San Felipe Suite 1950 Houston TX 77056 U.S.A.
(72)**Name of Inventor :**
1)ERIC J. MARKEL
2)ROBERT O. HAGERTY
3)RICHARD B. PANNELL
4)MICHAEL E. SIELOFF
5)JEROME HOLVECK

(57) Abstract :
Methods for shutting down and restarting polymerization in a gas phase polymerization reactor are provided. The method can include introducing a polymerization neutralizer to the reactor in an amount sufficient to stop polymerization therein. The method can also include stopping recovery of a polymer product from the reactor and stopping introduction of a catalyst feed and a reactor feed to the reactor. The method can also include adjusting a pressure within the reactor from an operating pressure to an idling pressure. The method can also include adjusting a superficial velocity of a cycle fluid through the reactor from an operating superficial velocity to an idling superficial velocity. The method can also include maintaining the reactor in an idled state for a period of time.

No. of Pages : 37 No. of Claims : 28

(12) PATENT APPLICATION PUBLICATION
(19) INDIA
(22) Date of filing of Application :24/07/2012
(21) Application No.6512/DELNP/2012 A
(43) Publication Date : 31/01/2014

(54) Title of the invention : METHOD FOR MANUFACTURING AN ELASTOMERIC COMPOSITION HAVING A SELF-SEALING PROPERTY

(51) International classification :C08J 3/00
(31) Priority Document No :1050598
(32) Priority Date :28/01/2010
(33) Name of priority country :France
(86) International Application No :PCT/EP2011/050859
Filing Date :21/01/2011
(87) International Publication No : NA
(61) Patent of Addition to Application Number :NA
Filing Date :NA
(62) Divisional to Application Number :NA
Filing Date :NA

(71)**Name of Applicant :**
1)COMPAGNIE GENERALE DES ETABLISSEMENTS MICHELIN
Address of Applicant :12 cours Sablon F-63000 CLERMONT-FERRAND France
2)MICHELIN RECHERCHE ET TECHNIQUE S.A.
(72)**Name of Inventor :**
1)BOZENA VOGE
2)JOSE CARLOS ARAUJO DA SILVA
3)JOSE MERINO LOPEZ

(57) Abstract :
Process for the manufacture of an elastomer composition having a self-sealing property which is based on at least (phr meaning parts by weight per 100 parts of solid elastomer): a solid unsaturated diene elastomer; between 30 and 90 phr of a hydrocarbon resin; from 0 to less than 30 phr of filler; between 0.5 and 15 phr of thiuram polysulphide, in which, during a first stage or stage (a), a masterbatch comprising at least the solid unsaturated diene elastomer and between 30 and 90 phr of a hydrocarbon resin is prepared by mixing these various components in a mixer at a hot compounding temperature or up to a hot compounding temperature which is greater than the softening temperature of the hydrocarbon resin.

No. of Pages : 34 No. of Claims : 41

(12) PATENT APPLICATION PUBLICATION
(19) INDIA
(22) Date of filing of Application :24/07/2012
(21) Application No.6513/DELNP/2012 A
(43) Publication Date : 31/01/2014

(54) Title of the invention : HIGH-STRENGTH STEEL PLATE AND METHOD FOR PRODUCING SAME

(51) International classification :C22C 38/00
(31) Priority Document No :2010-111603
(32) Priority Date :14/05/2010
(33) Name of priority country :Japan
(86) International Application No :PCT/JP2011/060495
Filing Date :22/04/2011
(87) International Publication No : NA
(61) Patent of Addition to Application Number :NA
Filing Date :NA
(62) Divisional to Application Number :NA
Filing Date :NA

(71)**Name of Applicant :**
1)NIPPON STEEL & SUMITOMO METAL CORPORATION
Address of Applicant :6-1, MARUNOUCHI 2-CHOME, CHIYODA-KU, TOKYO 100-8071, JAPAN
2)NIPPON STEEL & SUMITOMO METAL CORPORATION
(72)**Name of Inventor :**
1)TATSUYA KUMAGAI
2)MICHINORI GOTOH

(57) Abstract :
A high-strength steel plate which is superior in bendability, weldability and toughness, and has a yield strength of 885MPa or more and an average value of absorbed 5 energy of impact tests at -40°C of 33J/cm2 or more, the high-strength steel plate including as a chemical composition, by mass %, C : 0.10% to 0.18%, Si : 0.20% to 0.80%, Mn : 0.20% to 1.60% Mo : 0.10% to 0.60%, Nb : 0.010% to 0.050%, Ti : 0.005% to 0.030%, At : 0.01% to 0.10%, B : 0.0003% to 0.0030%, P : 0.012% or less, S 0.005% or less, N : 0.0060% or less, and Pcm : 0.29% or less, wherein the high-strength 10 steel plate has a softened layer with Hv of 250 or less and with a thickness of 50 μm or more and of not greater than 3% of a plate thickness of the steel plate in a surface of the steel plate, and average aspect ratio of prior austenite grains are 1.6 or more respectively in a L section and a T section at a position of a depth of 1/4 of the plate thickness from a surface.

No. of Pages : 35 No. of Claims : 4

(12) PATENT APPLICATION PUBLICATION
(19) INDIA
(22) Date of filing of Application :24/07/2012
(21) Application No.6514/DELNP/2012 A
(43) Publication Date : 31/01/2014

(54) Title of the invention : CATALYST FOR USE IN PRODUCTION OF MONOCYCLIC AROMATIC HYDROCARBON AND PROCESS FOR PRODUCTION OF MONOCYCLIC AROMATIC HYDROCARBON

(51) International classification :B01J 29/80
(31) Priority Document No :2010-010262
(32) Priority Date :20/01/2010
(33) Name of priority country :Japan
(86) International Application No :PCT/JP2011/050995
Filing Date :20/01/2011
(87) International Publication No : NA
(61) Patent of Addition to Application Number :NA
Filing Date :NA
(62) Divisional to Application Number :NA
Filing Date :NA

(71)**Name of Applicant :**
1)JX NIPPON OIL & ENERGY CORPORATION
Address of Applicant :6-3 Otemachi 2-Chome Chiyoda-ku Tokyo 100-8162 Japan
(72)**Name of Inventor :**
1)SHINICHIRO YANAGAWA
2)MASAHIDE KOBAYASHI
3)KAZUAKI HAYASAKA

(57) Abstract :
A catalyst is provided for production of monocyclic aromatic hydrocarbons having a carbon number of 6 to 8 from feedstock in which a 10 vol% distillation 5 temperature is 140°C or higher and a 90 vol% distillation temperature is 380°C or lower. The catalyst contains crystalline aluminosilicate including large-pore zeolite having a 12-membered ring structure, and intermediate-pore zeolite having a 10-membered ring structure.

No. of Pages : 37 No. of Claims : 9

(12) PATENT APPLICATION PUBLICATION
(19) INDIA
(22) Date of filing of Application :24/07/2012
(21) Application No.6515/DELNP/2012 A
(43) Publication Date : 31/01/2014

(54) Title of the invention : PRODUCTION METHOD FOR THICK STEEL PLATE

(51) International classification :C21D 8/02
(31) Priority Document No :2010-029608
(32) Priority Date :15/02/2010
(33) Name of priority country :Japan
(86) International Application No :PCT/JP2011/052188
Filing Date :27/01/2011
(87) International Publication No : NA
(61) Patent of Addition to Application Number :NA
Filing Date :NA
(62) Divisional to Application Number :NA
Filing Date :NA

(71)**Name of Applicant :**
1)NIPPON STEEL & SUMITOMO METAL CORPORATION
Address of Applicant :6-1, MARUNOUCHI 2-CHOME, CHIYODA-KU, TOKYO 100-8071, JAPAN
(72)**Name of Inventor :**
1)KIYOTAKA NAKASHIMA
2)MANABU HOSHINO

(57) Abstract :
A method of production of steel plate characterized by heating a steel slab which has a predetermined chemical compositions to 1000 to 1200°C, then rolling by first stage rolling at a plate thickness center temperature of 950 to 1200°C, a cumulative rolling reduction of 50 to 95%, and a number of passes of 4 to 16 passes, then rolling by second stage rolling at a plate thickness center temperature of 850 to 950°C, a number of passes of 2 to 8 passes, a rolling reduction at each pass of 10 to 25%, and a time between passes of 3 to 25 seconds, then cooling by first stage cooling from a plate thickness center temperature of 750°C or more by a 0.5 to 8°C/s cooling rate down to 630 to 700°C, then cooling by second stage cooling by a 10 to 50°C/s cooling rate down to 550°C or less in temperature so as to obtain to steel plate which has a plate thickness of 10 to 40 mm, a yield stress of 315 to 550 MPa, a microstructure of a mixed microstructure of one or more of soft phase ferrite and hard phase pearlite, bainite, and martensite, an area percentage of ferrite at the plate thickness center part of 70 to 95%, an average Vickers hardness of the hard phases of 250 to 500, and an average grain size of 5 to 20 μm.

No. of Pages : 34 No. of Claims : 2

(12) PATENT APPLICATION PUBLICATION
(19) INDIA
(22) Date of filing of Application :24/07/2012
(21) Application No.6516/DELNP/2012 A
(43) Publication Date : 31/01/2014

(54) Title of the invention : HIGH STRENGTH NON-WOVEN ELASTIC FABRICS

(51) International classification :D04H 1/56
(31) Priority Document No :61/297,951
(32) Priority Date :25/01/2010
(33) Name of priority country :U.S.A.
(86) International Application No :PCT/US2011/022181
Filing Date :24/01/2011
(87) International Publication No : NA
(61) Patent of Addition to Application Number :NA
Filing Date :NA
(62) Divisional to Application Number :NA
Filing Date :NA

(71)**Name of Applicant :**
1)LUBRIZOL ADVANCED MATERIALS INC
Address of Applicant :9911 Brecksville Road Cleveland OH 44141-3247 U.S.A.
(72)**Name of Inventor :**
1)RAVI R VEDULA
2)JAMES E. BRYSON JR
3)MOUH-WAHNG LEE

(57) Abstract :
Elastic non-woven fabrics are disclosed which are made in a melt blown process or a spun bond process. The fabric is made from a thermoplastic polyurethane polymer mixed with a crosslinking agent to give high strength elastic non-woven fabric. The crosslinking agent is added to the polymer melt prior to the melt passing through the die which forms the individual fibers. Further processing the non-woven is also disclosed.

No. of Pages : 23 No. of Claims : 24

(12) PATENT APPLICATION PUBLICATION
(19) INDIA
(22) Date of filing of Application :24/07/2012
(21) Application No.6553/DELNP/2012 A
(43) Publication Date : 31/01/2014

(54) Title of the invention : AN ADHESIVE COMPOSITION

(51) International classification :C08G 63/00
(31) Priority Document No :60/599,772
(32) Priority Date :06/08/2004
(33) Name of priority country :U.S.A.
(86) International Application No :PCT/US05/025691
Filing Date :20/07/2005
(87) International Publication No : NA
(61) Patent of Addition to Application Number :NA
Filing Date :NA
(62) Divisional to Application Number :867/DELNP/2007
Filed on :01/02/2007

(71)**Name of Applicant :**
1)OATEY CO.
Address of Applicant :4700 W. 160th Street Cleveland OH 44135 U.S.A.
(72)**Name of Inventor :**
1)AMRIT KAUR PARHAR
2)FOREST HAMPTON III
3)CHARLES NEAL BUSH
4)FRED RICHARD SCHOLER

(57) Abstract :
Adhesive compositions are described which comprise at least one organic sulfoxide, sulfone or sulfide and at least one ketone, ether, ester, amide or carbonate or a mixture thereof. The adhesive compositions also may contain one or more water insoluble polymers such as ABS, PVC and CPVC. Methods of adhesively bonding or welding a first plastic surface to a second plastic surface using these adhesive compositions also are described.

No. of Pages : 36 No. of Claims : 14

(12) PATENT APPLICATION PUBLICATION
(19) INDIA
(22) Date of filing of Application :24/07/2012
(21) Application No.6554/DELNP/2012 A
(43) Publication Date : 31/01/2014

(54) Title of the invention : HIGH-STRENGTH STEEL AND HIGH-STRENGTH BOLT WITH EXCELLENT RESISTANCE TO DELAYED FRACTURE AND MANUFACTURING METHOD THEREFOR

(51) International classification :C22C 38/00
(31) Priority Document No :2010-054648
(32) Priority Date :11/03/2010
(33) Name of priority country :Japan
(86) International Application No :PCT/JP2011/056482
Filing Date :11/03/2011
(87) International Publication No : NA
(61) Patent of Addition to Application Number :NA
Filing Date :NA
(62) Divisional to Application Number :NA
Filing Date :NA

(71)**Name of Applicant :**
1)NIPPON STEEL & SUMITOMO METAL CORPORATION
Address of Applicant :6-1, MARUNOUCHI 2-CHOME, CHIYODA-KU, TOKYO 100-8071, JAPAN
(72)**Name of Inventor :**
1)DAISUKE HIRAKAMI
2)TETSUSHI CHIDA
3)TOSHIMI TARUI

(57) Abstract :
A steel which is excellent in delayed fracture resistance containing, by mass%, C: 0.10 to 0.55%, Si: 0.01 to 3%, and Mn: 0.1 to 2%, further containing one or more of Cr: 0.05 to 1.5%, V: 0.05 to 0.2%, Mo: 0.05 to 0.4%, Nb: 0.001 to 0.05%, Cu: 0.01 to 4%, Ni: 0.01 to 4%, and B: 0.0001 to 0.005%, and having a balance of Fe and unavoidable impurities, the structure being a mainly tempered martensite structure, the surface of the steel being formed with (a) a nitrided layer having a thickness from the surface of the steel of 200 pm or more and a nitrogen concentration of 12.0 mass% or less and higher than the nitrogen concentration of the steel by 0.02 mass% or more and (b) a low carbon region having a depth from the surface of the steel of 100 pm or more to 1000 pm or less and having a carbon concentration of 0.05 mass% or more and 0.9 time or less the carbon concentration of the steel.

No. of Pages : 50 No. of Claims : 18

(12) PATENT APPLICATION PUBLICATION
(19) INDIA
(22) Date of filing of Application :24/07/2012
(21) Application No.6555/DELNP/2012 A
(43) Publication Date : 31/01/2014

(54) Title of the invention : DEVICE FOR COUPLING FLUID-CIRCULATION TUBES AND RELATED METHOD

(51) International classification :F16L 19/028
(31) Priority Document No :1050350
(32) Priority Date :20/01/2010
(33) Name of priority country :France
(86) International Application No :PCT/FR2011/050090
Filing Date :19/01/2011
(87) International Publication No : NA
(61) Patent of Addition to Application Number :NA
Filing Date :NA
(62) Divisional to Application Number :NA
Filing Date :NA

(71)**Name of Applicant :**
1)PERMASWAGE
Address of Applicant :ZI des Dames - BP 60025 F-78340 Les Clayes Sous Bois France
(72)**Name of Inventor :**
1)BENOŽT ARTAUD
2)ST‰PHANE HERAUD

(57) Abstract :
The invention relates mainly to a device for coupling fluid-circulation tubes including a first coupling (1a) connecting first (3a) and second (5a) tubes, in which first coupling (1a) the respective ends (2a, 4a) of the first (3a) and second (5a) tubes are arranged coaxially aligned with one another. Said device is essentially characterised in that at least one (11a) of the opposite ends of the first (3a) and second (5a) tubes is capable of being secured to a second coupling (60, 70, 80, 90), which is intended for coupling the first (3a) or second (5a) tube to a pipe (14) of a fluid circuit, said second coupling (60, 70, 80, 90) comprising at least one portion (61, 71, 81, 91, 100) made in one piece with the opposite end (11a) of the tube in question (3a), such that said portion (61, 71, 81, 91, 100) of the second coupling (60, 70, 80, 90) forms the opposite end (11a) of the tube in question (3a). The invention also relates to a method comprising at least one step of machining said portion (61, 71, 81, 91, 100) of the second coupling (60, 70, 80, 90) at the end (11a) of the tube in question (3a).

No. of Pages : 27 No. of Claims : 10

(12) PATENT APPLICATION PUBLICATION
(19) INDIA
(22) Date of filing of Application :24/07/2012
(21) Application No.6556/DELNP/2012 A
(43) Publication Date : 31/01/2014

(54) Title of the invention : SIMULATION DISTILLATION BY COMPREHENSIVE TWO-DIMENSIONAL GAS CHROMATOGRAPHY

(51) International classification :G01N 30/02
(31) Priority Document No :61/338,500
(32) Priority Date :19/02/2010
(33) Name of priority country :U.S.A.
(86) International Application No :PCT/US2011/024679
Filing Date :14/02/2011
(87) International Publication No : NA
(61) Patent of Addition to Application Number :NA
Filing Date :NA
(62) Divisional to Application Number :NA
Filing Date :NA

(71)**Name of Applicant :**
1)EXXONMOBIL RESEARCH AND ENGINEERING COMPANY
Address of Applicant :1545 Route 22 East P.O. Box 900 Annandale NJ 08801-0900 U.S.A.
(72)**Name of Inventor :**
1)FRANK CHENG-YU WANG
2)BRYAN E. HAGEE

(57) Abstract :
A method to simulate distillation of a petroleum stream by comprehensive two-dimensional gas chromatography including the step of separating said petroleum stream with a two-dimensional gas chromatograph to determine polarity as a function of temperature, and integrating vertically the two-dimensional gas chromatograph at a given temperature to determine signal intensity as a function of temperature.

No. of Pages : 15 No. of Claims : 8

(12) PATENT APPLICATION PUBLICATION
(19) INDIA
(22) Date of filing of Application :24/07/2012
(21) Application No.6557/DELNP/2012 A
(43) Publication Date : 31/01/2014

(54) Title of the invention : STEEL SHEET AND PROCESS FOR PRODUCING STEEL SHEET

(51) International classification :C22C 38/06
(31) Priority Document No :2010-019193
(32) Priority Date :29/01/2010
(33) Name of priority country :Japan
(86) International Application No :PCT/JP2011/051896
Filing Date :31/01/2011
(87) International Publication No : NA
(61) Patent of Addition to Application Number :NA
Filing Date :NA
(62) Divisional to Application Number :NA
Filing Date :NA

(71)**Name of Applicant :**
1)NIPPON STEEL & SUMITOMO METAL CORPORATION
Address of Applicant :6-1, MARUNOUCHI 2-CHOME, CHIYODA-KU, TOKYO 100-8071, JAPAN
(72)**Name of Inventor :**
1)RIKI OKAMOTO
2)NATSUKO SUGIURA
3)KOHICHI SANO
4)CHISATO WAKABAYASHI
5)NAOKI YOSHINAGA
6)KAORU KAWASAKI

(57) Abstract :
A steel sheet is provided, including: as chemical components, by mass%, 0.05% to 0.35% of C; 0.05% to 2.0% of Si; 0.8% to 3.0% of Mn; 0,01% to 2.0% of Al; equal to or less than 0.1% of P; equal to or less than 0.05% of S; equal to or less than 0.01% of N; and the balance including iron and inevitable impurities, wherein an area ratio of equal to or higher than 50% of a total of a ferrite phase, a bainite phase, and a tempered martensite phase is contained, an area ratio of equal to or higher than 3% of a retained austenite phase is contained, and crystal grains of the retained austenite phase having a number ratio of equal to or higher than 50% satisfy Expression 1, assuming that a carbon concentration at a position of center of gravity is Cgc and a carbon concentration at a grain boundary is Cgb.

No. of Pages : 53 No. of Claims : 12

(12) PATENT APPLICATION PUBLICATION
(19) INDIA
(22) Date of filing of Application :23/07/2012
(21) Application No.2270/DEL/2012 A
(43) Publication Date : 31/01/2014

(54) Title of the invention : DWELL TIME CONTROL METHOD AND SYSTEM WITH AUTOMATIC PRESSURE SWITCH POINT ADJUSTMENT

(51) International classification :C03B
(31) Priority Document No :13/232,039
(32) Priority Date :14/09/2011
(33) Name of priority country :U.S.A.
(86) International Application No :NA
Filing Date :NA
(87) International Publication No : NA
(61) Patent of Addition to Application Number :NA
Filing Date :NA
(62) Divisional to Application Number :NA
Filing Date :NA

(71)**Name of Applicant :**
1)EMHART GLASS S.A.
Address of Applicant :Hinterbergstrasse 22 Cham CH-6330 Switzerland
(72)**Name of Inventor :**
1)ANDREAS HELFENSTEIN
2)HARTMUT GEISEL
3)CHRISTIAN FROBA

(57) Abstract :
A DWELL TIME CONTROL SYSTEM AND METHOD FOR AUTOMATICALLY ADJUSTING THE SELECTION AND TIMING OF A SEQUENCE OF PRESSURES USED TO DRIVE THE PLUNGER IN A PARISON MOLD DURING THE PARISON FORMING PROCESS. THE TIMING OF CHARACTERISTICS OF THE OBSERVED PRESS CURVE FROM ONE OR MORE PREVIOUS PARISON FORMING CYCLES ARE ASCERTAINED AND USED TO CONTROL THE TIMING OF THE CHANGES IN PRESSURE DURING A SUBSEQUENT PARISON FORMING CYCLE. THE TIMINGS OF THESE CHANGES OF PRESSURE ARE DETERMINED AS PREDETERMINED PERCENTAGES OF THE TIMINGS OF THE CHARACTERISTICS IN ORDER TO PREVENT THE BLOW MOLD FROM BEING FORCED OPEN AND IN ORDER TO PREVENT THE OCCURRENCE OF AN OVERPRESSED FINISH.

No. of Pages : 34 No. of Claims : 20

(12) PATENT APPLICATION PUBLICATION
(19) INDIA
(22) Date of filing of Application :27/07/2012

(21) Application No.2330/DEL/2012 A
(43) Publication Date : 31/01/2014

(54) Title of the invention : CONVERTIPLANE

(51) International classification :B64C
(31) Priority Document No :11425210.9
(32) Priority Date :29/07/2011
(33) Name of priority country :EPO
(86) International Application No :NA
Filing Date :NA
(87) International Publication No : NA
(61) Patent of Addition to Application Number :NA
Filing Date :NA
(62) Divisional to Application Number :NA
Filing Date :NA

(71)**Name of Applicant :**
1)AGUSTAWESTLAND S.P.A.
Address of Applicant :520, FRAZIONE CASCINA COSTA - VIA GIOVANNI AGUSTA, SAMARATE ITALY.
(72)**Name of Inventor :**
1)JAMES WANG

(57) Abstract :
There is described a convertiplane (1) comprising a pair of semi-wings (3), a first and a second rotor (4) which may rotate about relative first axes (B) and tilt about relative second axes (C) together with first axes (B) with respect to semi-wings (3) between a helicopter mode and an aeroplane mode; first axes (B) are, in use, transversal to a longitudinal direction (A) of convertiplane (1) in helicopter mode, and are, in use, substantially parallel to longitudinal direction (A) in aeroplane mode; first and second rotors (4) may tilt about relative second axes (C) independently of each other. (Figure 18)

FIG. 18

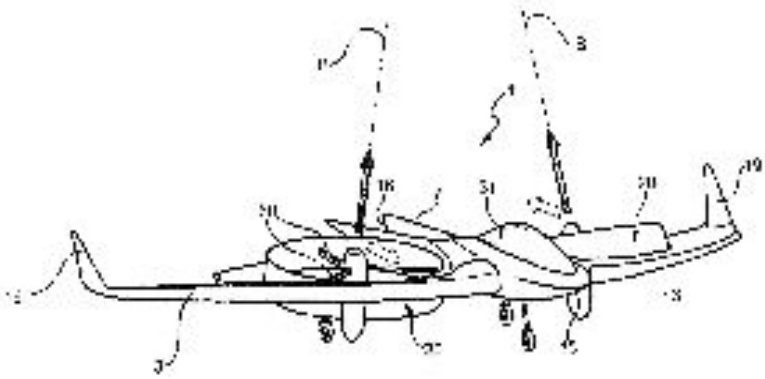

No. of Pages : 45 No. of Claims : 13

(12) PATENT APPLICATION PUBLICATION
(19) INDIA
(22) Date of filing of Application :27/07/2012
(21) Application No.2332/DEL/2012 A
(43) Publication Date : 31/01/2014

(54) Title of the invention : A CATALYTIC CRACKING PROCESS FOR PRODUCING PROPYLENE

(51) International classification :C07C
(31) Priority Document No :201110214337.9
(32) Priority Date :29/07/2011
(33) Name of priority country :China
(86) International Application No :NA
Filing Date :NA
(87) International Publication No : NA
(61) Patent of Addition to Application Number :NA
Filing Date :NA
(62) Divisional to Application Number :NA
Filing Date :NA

(71)**Name of Applicant :**
1)CHINA PETROLEUM CHEMICAL CORPORATION
Address of Applicant :22 CHAOYANGMEN NORTH STREET, CHAOYANG DISTRICT, BEIJING, 100728, P.R.CHNIA.
2)RESEARCH INSTITUTE OF PETROLEUM PROCESSING, SINOPEC
(72)**Name of Inventor :**
1)GAO YONGCAN
2)XIE CHAOGANG
3)LU WEIMIN
4)ZHU JINQUAN
5)CUI YAN
6)ZHANG JIUSHUN
7)YANG YI'NAN
8)SHA YOUXIN
9)MA JIANGUO

(57) Abstract :
The present invention discloses a catalytic cracking process for producing propylene, wherein a heavy feedstock and a catalyst are introduced into a first riser; a cracked heavy oil and a catalyst are introduced into a second riser communicated with a fluidized bed; a light hydrocarbon is introduced into a second riser after introducing the heavy oil; the reaction mixture from the second riser is introduced into the fluidized bed; the reaction mixtures from the first riser and the fluidized bed are separated in a product separation system to obtain a cracked heavy oil, which can be recycled back to the second riser. Said process is useful in the propylene production, and has a good conversion for heavy oil, high yields of propylene and butylene, and a good selectivity for dry gas and coke.

No. of Pages : 48 No. of Claims : 21

(12) PATENT APPLICATION PUBLICATION
(19) INDIA
(22) Date of filing of Application :18/07/2012
(21) Application No.2218/DEL/2012 A
(43) Publication Date : 31/01/2014

(54) Title of the invention : SYSTEM FOR RECOVERING HEAT FROM A BIOMASS GASIFIER

(51) International classification :F02C
(31) Priority Document No :13/190,425
(32) Priority Date :25/07/2011
(33) Name of priority country :U.S.A.
(86) International Application No :NA
Filing Date :NA
(87) International Publication No : NA
(61) Patent of Addition to Application Number :NA
Filing Date :NA
(62) Divisional to Application Number :NA
Filing Date :NA

(71)**Name of Applicant :**
1)GENERAL ELECTRIC COMPANY
Address of Applicant :1 RIVER ROAD, SCHENECTADY, NEW YORK 12345, U.S.A.
(72)**Name of Inventor :**
1)MAJMUDAR, JINMESH PRANAV
2)MALL, OMPRAKASH
3)SUBRAMANIAN, LAKSHMANAN
4)DSOUZA, AVISH IVAN

(57) Abstract :
Systems (10) for recovering heat from a biomass gasifier (12) are provided. One gasification system (10) includes a gasifier (12) having an inlet section (22) configured to receive a biomass feedstock (18) and air (30), and a reactor section (24) configured to gasify a mixture of the biomass feedstock (18) and the air (30) to generate a producer gas. The gasifier (12) also has an outlet section (26) configured to output the producer gas from the reactor section (24). The gasification system (10) also includes a heat exchanger system (110, 140, 180) coupled to the gasifier (12). The heat exchanger system (110, 140, 180) is configured to recover heat from the gasifier (12) by transferring heat to a fluid to create a heated fluid.

No. of Pages : 25 No. of Claims : 10

(12) PATENT APPLICATION PUBLICATION
(19) INDIA
(22) Date of filing of Application :23/07/2012

(21) Application No.2279/DEL/2012 A
(43) Publication Date : 31/01/2014

(54) Title of the invention : VOLTAGE SURGE DETECTION CIRCUIT

(51) International classification :H02H
(31) Priority Document No :201210197081.X
(32) Priority Date :14/06/2012
(33) Name of priority country :China
(86) International Application No :NA
Filing Date :NA
(87) International Publication No : NA
(61) Patent of Addition to Application Number :NA
Filing Date :NA
(62) Divisional to Application Number :NA
Filing Date :NA

(71)**Name of Applicant :**
1)MIDEA GROUP CO., LTD.
Address of Applicant :NO. 6, MIDEA ROAD, SHUNDE DISTRICT, FOSHAN CITY, GUANGDONG PROVINCE 528311, CHINA
(72)**Name of Inventor :**
1)LI, BAOGANG
2)XIE, BO
3)LIU, WENQI

(57) Abstract :
A voltage surge detection circuit is provided comprising a rectifying circuit for converting alternating current to direct current, a surge detecting circuit for detecting a pulse surge of the direct current, and a zero crossing detecting circuit for detecting zero crossing point, wherein the input of the surge detecting circuit and the input of the zero crossing detecting circuit are respectively connected with the rectifying circuit, and the output of the surge detecting circuit is connected with the output of the zero crossing detecting circuit. The circuit is capable of promptly and accurately detecting the surge in the circuit and outputting effective surge detection signal, such that the subsequent protection circuit can take actions in time to effectively protect the power semiconductor devices used in the circuit system from damage by the surge.

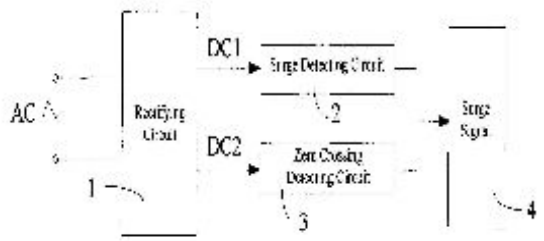

Fig. 1

No. of Pages : 15 No. of Claims : 7

(12) PATENT APPLICATION PUBLICATION
(19) INDIA
(22) Date of filing of Application :24/07/2012
(21) Application No.6517/DELNP/2012 A
(43) Publication Date : 31/01/2014

(54) Title of the invention : PROCESS FOR PRODUCTION OF POLYMER NANOCOMPOSITES

(51) International classification :C08F 8/22
(31) Priority Document No :10000568.5
(32) Priority Date :20/01/2010
(33) Name of priority country :EPO
(86) International Application No :PCT/EP2011/050506
Filing Date :17/01/2011
(87) International Publication No : NA
(61) Patent of Addition to Application Number :NA
Filing Date :NA
(62) Divisional to Application Number :NA
Filing Date :NA

(71)**Name of Applicant :**
1)LANXESS INTERNATIONAL SA
Address of Applicant :Route Louis Braille 12 CH-1763 Granges-Paccot Switzerland
(72)**Name of Inventor :**
1)DANA ADKINSON
2)ADAM GRONOWSKI
3)CARSTEN KREUDER
4)JOHN LOVEGROVE
5)PHIL MAGILL
6)HANNS-INGOLF PAUL
7)ROLF FELLER

(57) Abstract :
The invention relates to a processes for preparing nanocomposites comprising rubber ionomers which were prepared by an energy efficient, environmentally favourable process that uses a common medium for solution polymerization, bromination of rubber and optionally subsequent polymer nanocomposite formation. Polymer nanocomposites according to the present invention exhibit high oxygen impermeability.

No. of Pages : 26 No. of Claims : 19

(12) PATENT APPLICATION PUBLICATION
(19) INDIA
(22) Date of filing of Application :24/07/2012
(21) Application No.6518/DELNP/2012 A
(43) Publication Date : 31/01/2014

(54) Title of the invention : CATALYST AND METHOD OF CATALYST MANUFACTURE

(51) International classification :B01J 35/00
(31) Priority Document No :1000045.3
(32) Priority Date :04/01/2010
(33) Name of priority country :U.K.
(86) International Application No :PCT/GB2010/052203
Filing Date :23/12/2010
(87) International Publication No : NA
(61) Patent of Addition to Application Number :NA
Filing Date :NA
(62) Divisional to Application Number :NA
Filing Date :NA

(71)**Name of Applicant :**
1)JOHNSON MATTHEY PLC
Address of Applicant :5th Floor 25 Farringdon Street London EC4A 4AB United Kingdom
(72)**Name of Inventor :**
1)MARTIN GRAHAM PARTRIDGE
2)MARINUS JOHANNES VISSENBERG
3)ANDERS GABRIELSSON

(57) Abstract :
The catalyst of the invention is a particulate catalyst in the form of particles having a minimum dimension of at least 0.8 mm, comprising a transition metal or a compound thereof dispersed on a porous support material, characterised in that said catalyst particles comprise at least 35% w/w total transition metal; and the transition metal surface area of said catalyst is at least 110 m2 per gram of transition metal and the tapped bulk density of a bed of the catalyst particles is at least 0.7 g/ml. The method of making a catalyst includes multiple steps of impregnation of a porous support with a metal ammine solution followed by drying, calcination and reduction of the dried material. The catalyst is useful in hydrogenation reactions.

No. of Pages : 14 No. of Claims : 15

(12) PATENT APPLICATION PUBLICATION
(19) INDIA
(22) Date of filing of Application :27/07/2012
(21) Application No.2324/DEL/2012 A
(43) Publication Date : 31/01/2014

(54) Title of the invention : PULSE DETONATION COMBUSTOR WITH PLENUM

(51) International classification :F23C
(31) Priority Document No :13/210,603
(32) Priority Date :16/08/2011
(33) Name of priority country :U.S.A.
(86) International Application No :NA
Filing Date :NA
(87) International Publication No : NA
(61) Patent of Addition to Application Number :NA
Filing Date :NA
(62) Divisional to Application Number :NA
Filing Date :NA

(71)**Name of Applicant :**
1)GENERAL ELECTRIC COMPANY
Address of Applicant :1 RIVER ROAD, SCHENECTADY, NEW YORK 12345, U.S.A.
(72)**Name of Inventor :**
1)RASHEED, ADAM
2)TANGIRALA, VENKAT
3)JOSHI, NARENDRA
4)KENYON, ROSS

(57) Abstract :
A pulse detonation combustor (10) includes at least one plenum (24) located along the length of the pulse detonation combustor. The plenum (24) can be located: 1) proximate an air valve (12); 2) between a fuel injection port (18) and an ignition source (20); 3) downstream of both the fuel injection port and the ignition source; and 4) proximate an exit nozzle (14) of the pulse detonation combustor. In addition, the pulse detonation combustor (10) can have multiple plenums (24), for example, proximate the air valve and proximate the exit nozzle. The location and dimensions of the plenum (24) can be selectively adjusted to control mechanical loading on the wall, the velocity of fluid flowing within the combustor, and the pressure generated by the pulse detonation combustor.

No. of Pages : 17 No. of Claims : 10

(12) PATENT APPLICATION PUBLICATION
(19) INDIA
(22) Date of filing of Application :27/07/2012
(21) Application No.2325/DEL/2012 A
(43) Publication Date : 31/01/2014

(54) Title of the invention : HEAT RECOVERY FROM A GASIFICATION SYSTEM

(51) International classification :F01K
(31) Priority Document No :13/215090
(32) Priority Date :22/08/2011
(33) Name of priority country :U.S.A.
(86) International Application No :NA
Filing Date :NA
(87) International Publication No : NA
(61) Patent of Addition to Application Number :NA
Filing Date :NA
(62) Divisional to Application Number :NA
Filing Date :NA

(71)**Name of Applicant :**
1)GENERAL ELECTRIC COMPANY
Address of Applicant :1 RIVER ROAD, SCHENECTADY, NEW YORK 12345, U.S.A.
(72)**Name of Inventor :**
1)KIDAMBI, GANESH PRASADH
2)TYREE, RONALD FREDRERICK
3)VIJ, ATUL KUMAR
4)BALASUBRAMANIAN, PRIYANANDINI

(57) Abstract :
A heat recovery system for use with a gasification system (10) is provided. One system includes a gasification system (10) and an organic Rankine cycle system (90) coupled to the gasification system (10). The organic Rankine cycle system (90) is configured to receive heated fluid (94) from the gasification system (10) and to deliver cooled fluid (96) to the gasification system (10). The organic Rankine cycle system (90) is configured to produce power by converting heat energy in the heated fluid (94).

No. of Pages : 35 No. of Claims : 10

(12) PATENT APPLICATION PUBLICATION
(19) INDIA
(22) Date of filing of Application :18/07/2012
(21) Application No.2220/DEL/2012 A
(43) Publication Date : 31/01/2014

(54) Title of the invention : FLUORESCENT LAMPS HAVING HIGH CRI AND LPW

(51) International classification :C09K
(31) Priority Document No :13/192,017
(32) Priority Date :27/07/2011
(33) Name of priority country :U.S.A.
(86) International Application No :NA
Filing Date :NA
(87) International Publication No : NA
(61) Patent of Addition to Application Number :NA
Filing Date :NA
(62) Divisional to Application Number :NA
Filing Date :NA

(71)**Name of Applicant :**
1)GENERAL ELECTRIC COMPANY
Address of Applicant :1 RIVER ROAD, SCHENECTADY, NEW YORK 12345, U.S.A.
(72)**Name of Inventor :**
1)DU, FANGMING
2)BEERS, WILLIAM WINDER
3)JANSMA, JON BENNETT
4)COHEN, WILLIAM ERWIN

(57) Abstract :
A fluorescent lamp including the four rare earth phosphor system provided herein exhibits high color rendering index (CRI), of at least 87, while simultaneously achieving high lumen output, or lumens per watt (LPW), of at least 80. The phosphor coating may be disposed in a one or two layer coating format. The four rare earth phosphor system includes a red emitting phosphor, a green emitting phosphor, a blue emitting phosphor, and a blue-green emitting phosphor, all four phosphors being rare earth-doped phosphor compositions.

No. of Pages : 22 No. of Claims : 18

(12) PATENT APPLICATION PUBLICATION
(19) INDIA
(22) Date of filing of Application :18/07/2012
(21) Application No.2221/DEL/2012 A
(43) Publication Date : 31/01/2014

(54) Title of the invention : A SILICON-CARBIDE MOSFET CELL STRUCTURE AND METHOD FOR FORMING SAME

(51) International classification :H01L
(31) Priority Document No :13/190,723
(32) Priority Date :26/07/2011
(33) Name of priority country :U.S.A.
(86) International Application No :NA
Filing Date :NA
(87) International Publication No : NA
(61) Patent of Addition to Application Number :NA
Filing Date :NA
(62) Divisional to Application Number :NA
Filing Date :NA

(71)**Name of Applicant :**
1)GENERAL ELECTRIC COMPANY
Address of Applicant :1 RIVER ROAD, SCHENECTADY, NEW YORK 12345, U.S.A.
(72)**Name of Inventor :**
1)ARTHUR, STEPHEN DALEY
2)MATOCHA, KEVIN
3)SANDVIK, PETER
4)STUM, ZACHARY
5)LOSEE, PETER
6)MCMAHON, JAMES

(57) Abstract :
In one embodiment, the invention comprises a MOSFET comprising individual MOSFET cells. Each cell comprises a U-shaped well (228) (P type) and two parallel sources (260) (N type) formed within the well. A plurality of source rungs (262) (doped N) connect sources (260) at multiple locations. Regions between two rungs (262) comprise a body (252) (P type). These features are formed on an N-type epitaxial layer (220), which is formed on an N-type substrate (216). A contact (290) extends across and contacts a plurality of source rungs (262) and bodies (252). Gate oxide and a gate contact overlie a leg of a first well and a leg of a second adjacent well, inverting the conductivity responsive to a gate voltage. A MOSFET comprises a plurality of these cells to attain a desired low channel resistance. The cell regions are formed using self-alignment techniques at several states of the fabrication process.

No. of Pages : 29 No. of Claims : 10

(12) PATENT APPLICATION PUBLICATION
(19) INDIA
(22) Date of filing of Application :23/07/2012
(21) Application No.2284/DEL/2012 A
(43) Publication Date : 31/01/2014

(54) Title of the invention : DOUBLE SECTION CHAMBER PLATE

(51) International classification :B24B
(31) Priority Document No :MI 2011A001434
(32) Priority Date :29/07/2011
(33) Name of priority country :Italy
(86) International Application No :NA
Filing Date :NA
(87) International Publication No : NA
(61) Patent of Addition to Application Number :NA
Filing Date :NA
(62) Divisional to Application Number :NA
Filing Date :NA

(71)**Name of Applicant :**
1)VALENTINI, GUIDO
Address of Applicant :VIA CORRIDONI, 4, 20122 MILANO, ITALY
(72)**Name of Inventor :**
1)VALENTINI, GUIDO

(57) Abstract :
A plate (1) for machining surfaces is provided, comprising a body (2) with bores (3, 31) and channels (4) for aspirating dust, on the top of which a deflector (7, 700) is hooked. Said deflector (7, 700) includes at least one vertical curved wall (71) adapted to define a double suction chamber consisting of a peripheral chamber (20) and of a central chamber (21) (Fig.1).

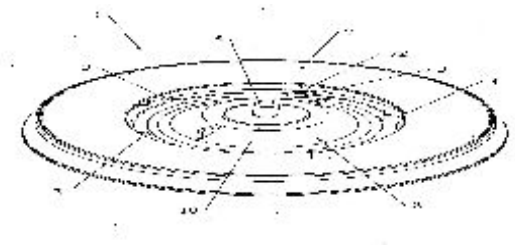

FIG.1

No. of Pages : 16 No. of Claims : 10

(12) PATENT APPLICATION PUBLICATION
(19) INDIA
(22) Date of filing of Application :23/05/2011
(21) Application No.1470/DEL/2011 A
(43) Publication Date : 31/01/2014

(54) Title of the invention : AN INTEGRATED MOUNTING FOR REAR SEAT BACKREST AND ISOFIX ANCHORAGE ON FLOOR OF A VEHICLE

(51) International classification	:B62K	(71)**Name of Applicant :**
(31) Priority Document No	:NA	**1)MARUTI SUZUKI INDIA LIMITED**
(32) Priority Date	:NA	Address of Applicant :1, NELSON MANDELA ROAD,
(33) Name of priority country	:NA	VASANT KUNJ, NEW DELHI-110070, INDIA.
(86) International Application No	:NA	(72)**Name of Inventor :**
Filing Date	:NA	**1)JANAK M PATEL**
(87) International Publication No	: NA	**2)JATINDER DHIMAN**
(61) Patent of Addition to Application Number	:NA	**3)PARVEEN KUMAR SHARMA**
Filing Date	:NA	**4)RATNESH KUMAR PANDEY**
(62) Divisional to Application Number	:NA	**5)GIRISH MANOHAR PATIL**
Filing Date	:NA	**6)SHILPI GUPTA**

(57) Abstract :
The present invention relates to an integrated mounting for rear seat backrest and Isofix anchorage of a vehicle comprising of bracket to mount rear seat backrest integrated to isofix anchorage mounting on each side.

No. of Pages : 12 No. of Claims : 4

(12) PATENT APPLICATION PUBLICATION
(19) INDIA
(22) Date of filing of Application :18/07/2012
(21) Application No.2227/DEL/2012 A
(43) Publication Date : 31/01/2014

(54) Title of the invention : MEDIA CONVEYANCE DEVICE, PRINTING DEVICE, AND MEDIA CONVEYANCE METHOD

(51) International classification :B65H
(31) Priority Document No :2011-178262
(32) Priority Date :17/08/2011
(33) Name of priority country :Japan
(86) International Application No :NA
Filing Date :NA
(87) International Publication No : NA
(61) Patent of Addition to Application Number :NA
Filing Date :NA
(62) Divisional to Application Number :NA
Filing Date :NA

(71)**Name of Applicant :**
1)SEIKO EPSON CORPORATION
Address of Applicant :4-1, NISHISHINJUKU 2-CHOME, SHINJUKU-KU, TOKYO 163-0811, JAPAN
(72)**Name of Inventor :**
1)NOGUCHI, AKIHIKO

(57) Abstract :
A conveyance device that holds a sheet medium in a roll and includes: a drive roller that feeds the sheet medium from the roll to a conveyance path; a roll rotating unit that rotates the roll and rewinds the fed sheet medium, and has a plurality of drive modes with different speeds of rotation; and a control unit that controls driving the drive roller and the roll rotating unit, and when starting a conveyance operation that rewinds the sheet medium, selects the drive mode to be used in the conveyance operation from among the plural drive modes based on the conveyance distance the sheet medium is to be conveyed in the conveyance operation and the diameter of the roll.

No. of Pages : 38 No. of Claims : 15

(12) PATENT APPLICATION PUBLICATION
(19) INDIA
(22) Date of filing of Application :23/07/2012
(21) Application No.2286/DEL/2012 A
(43) Publication Date : 31/01/2014

(54) Title of the invention : FINDER UNIT IMAGE CAPTURING APPARATUS AND DISPLAY CONTROL METHOD

(51) International classification :G03B
(31) Priority Document No :2011-177524
(32) Priority Date :15/08/2011
(33) Name of priority country :Japan
(86) International Application No :NA
Filing Date :NA
(87) International Publication No : NA
(61) Patent of Addition to Application Number :NA
Filing Date :NA
(62) Divisional to Application Number :NA
Filing Date :NA

(71)**Name of Applicant :**
1)NIKON CORPORATION
Address of Applicant :12-1 Yurakucho 1-chome Chiyoda-ku Tokyo 100-8331 JAPAN
(72)**Name of Inventor :**
1)HARA Shinya

(57) Abstract :
Provided is a finder unit including: a transmission-type display section that displays information as overlaid on a subject image; and a display controller that when an illuminating section illuminates the display section changes a first display state to a second display state where in the first display state a first region which is at least a part of an outer region of an effective image capturing range is displayed so that a transmission ratio of the subject image in the first region is lowered and in the second display state a second region which is a part of the outer region and is smaller in area than the first region is displayed so that a transmission ratio of the subject image in the second region is lowered.

No. of Pages : 57 No. of Claims : 21

(12) PATENT APPLICATION PUBLICATION
(19) INDIA
(22) Date of filing of Application :18/07/2012
(21) Application No.2212/DEL/2012 A
(43) Publication Date : 31/01/2014

(54) Title of the invention : TURBINE CASING AND METHOD OF MANUFACTURING THEREOF.

(51) International classification :B64C
(31) Priority Document No :11290328.1
(32) Priority Date :19/07/2011
(33) Name of priority country :EUROPEAN UNION
(86) International Application No :NA
Filing Date :NA
(87) International Publication No : NA
(61) Patent of Addition to Application Number :NA
Filing Date :NA
(62) Divisional to Application Number :NA
Filing Date :NA

(71)**Name of Applicant :**
1)ALSTOM TECHNOLOGY LTD
Address of Applicant :BROWN BOVERI STRASSE 7, CH-5400 BADEN, Switzerland
(72)**Name of Inventor :**
1)ERIC OLLIVAU

(57) Abstract :
A design for a casing of a large turbine is described with the casing including at least a front section, a middle section and an end section designed such that changes to the mold of the casing required to provide for a change in rotational speed to adapt the turbine to a different power grid frequency are limited to the mold for the middle section of the casing.

No. of Pages : 14 No. of Claims : 10

(12) PATENT APPLICATION PUBLICATION
(19) INDIA
(22) Date of filing of Application :23/07/2012

(21) Application No.2273/DEL/2012 A
(43) Publication Date : 31/01/2014

(54) Title of the invention : FUSE TERMINAL.

(51) International classification :H01J
(31) Priority Document No :102011052198.4
(32) Priority Date :27/07/2011
(33) Name of priority country :Germany
(86) International Application No :NA
Filing Date :NA
(87) International Publication No : NA
(61) Patent of Addition to Application Number :NA
Filing Date :NA
(62) Divisional to Application Number :NA
Filing Date :NA

(71)**Name of Applicant :**
1)PHOENIX CONTACT GMBH & CO. KG
Address of Applicant :FLACHSMARKTSTR. 8, 32825 BLOMBERG, GERMANY
(72)**Name of Inventor :**
1)REIBKE, HEINZ

(57) Abstract :
The aim in the case of a fuse terminal is to reduce the terminal spacing and to improve handling. This is achieved by the fuse terminal having a housing (1), a fuse carrier (2), which is arranged in a pivotable manner on the housing (1), and a fuse element (3), wherein the fuse carrier (2) has a pivoting arm (4), on which an accommodating element (5), in which the fuse element (3) is inserted, is arranged such that the fuse element (3) has its longitudinal axis (6) arranged at an angle of essentially 90° to the longitudinal axis (7) of the pivoting arm (4), and therefore the fuse element (3) can be introduced, by means of a pivoting movement of the fuse carrier (2), into an opening (19) formed vertically in the housing (1). (fig. 1)

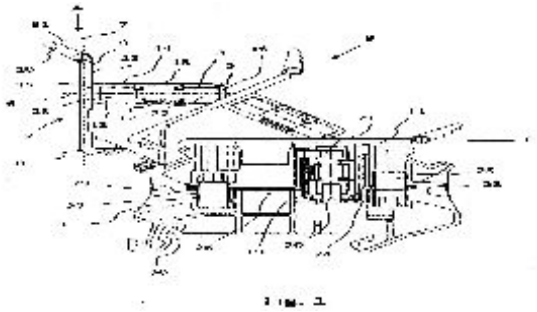

No. of Pages : 18 No. of Claims : 8

(12) PATENT APPLICATION PUBLICATION
(19) INDIA
(22) Date of filing of Application :23/07/2012
(21) Application No.2274/DEL/2012 A
(43) Publication Date : 31/01/2014

(54) Title of the invention : ADAPTER, CAMERA SYSTEM, AND ADAPTER CONTROL PROGRAM

(51) International classification :G03B
(31) Priority Document No :2011-160844
(32) Priority Date :22/07/2011
(33) Name of priority country :Japan
(86) International Application No :NA
Filing Date :NA
(87) International Publication No : NA
(61) Patent of Addition to Application Number :NA
Filing Date :NA
(62) Divisional to Application Number :NA
Filing Date :NA

(71)**Name of Applicant :**
1)NIKON CORPORATION
Address of Applicant :12-1, YURAKUCHO 1-CHOME, CHIYODA-KU, TOKYO, JAPAN
(72)**Name of Inventor :**
1)HASUDA, MASANORI
2)OIKAWA, MASAFUMI
3)NAKAJIMA, NORIAKI
4)NAGAYA, SHUNJI

(57) Abstract :
An adapter includes: a first mount section that is detachably attached to a camera body; a second mount section that is provided separately from the first mount section and is detachably attached to an interchangeable lens; and an adapter control section that is capable of communicating between the camera body mounted on the first mount section and the interchangeable lens mounted on the second mount section. The adapter control section provides body transmission lens information for transmission to the camera body, on the basis of lens information requested from the camera body and lens information received from the interchangeable lens, through mutually different methods according to types of the lens information.

No. of Pages : 228 No. of Claims : 19

(12) PATENT APPLICATION PUBLICATION
(19) INDIA
(22) Date of filing of Application :27/07/2012
(21) Application No.2333/DEL/2012 A
(43) Publication Date : 31/01/2014

(54) Title of the invention : YARN WINDING DEVICE

(51) International classification :D21D
(31) Priority Document No :2011-206414
(32) Priority Date :21/09/2011
(33) Name of priority country :Japan
(86) International Application No :NA
Filing Date :NA
(87) International Publication No : NA
(61) Patent of Addition to Application Number :NA
Filing Date :NA
(62) Divisional to Application Number :NA
Filing Date :NA

(71)**Name of Applicant :**
1)MURATA MACHINERY, LTD.
Address of Applicant :3 MINAMI OCHIAI-CHO, KISSHOIN, MINAMI-KU, KYOTO-SHI, KYOTO 601-8326, JAPAN
(72)**Name of Inventor :**
1)JINYAMA TATSUO

(57) Abstract :
A yarn winding unit is a device for forming a package . A cradle includes a winding bobbin clamping section for sandwiching and holding the package, and a package brake for controlling holding force and brake force application of the winding bobbin clamping section according to the supplied air pressure. An actuation air path includes a first air supply path for supplying a first air for supplying a holding force for the package brake to rotatably support the package through the winding bobbin clamping section to the package brake, and a second air supply path for supplying a second air for the package brake to apply brake force and stop the package through the winding bobbin clamping section to the package brake.

No. of Pages : 27 No. of Claims : 7

(12) PATENT APPLICATION PUBLICATION
(19) INDIA
(22) Date of filing of Application :13/07/2012
(21) Application No.2176/DEL/2012 A
(43) Publication Date : 31/01/2014

(54) Title of the invention : ROTARY INTERNAL COMBUSTION ENGINE WITH VARIABLE VOLUMETRIC COMPRESSION RATIO

(51) International classification :F01B
(31) Priority Document No :61/512,563
(32) Priority Date :28/07/2011
(33) Name of priority country :U.S.A.
(86) International Application No :NA
Filing Date :NA
(87) International Publication No : NA
(61) Patent of Addition to Application Number :NA
Filing Date :NA
(62) Divisional to Application Number :NA
Filing Date :NA

(71)**Name of Applicant :**
1)PRATT & WHITNEY CANADA CORP.
Address of Applicant :1000 MARIE VICTORIN (01BES), LONGUEUIL, QUEBEC J4G 1A1 CANADA.
(72)**Name of Inventor :**
1)THOMASSIN JEAN
2)JULIEN ANDRE
3)SCHULZ EDWIN
4)LANKTREE MICHAEL

(57) Abstract :
A method and apparatus for controlling an air input in a rotary engine, including selectively controlling a plurality of inlet ports communicating with an internal combustion cavity of the engine, the ports located serially downstream of the exhaust port relative direction of a revolution of a rotor of the engine. The inlet ports are controlled to alter air intake at various engine operational stages, such as start up, idle, etc., to allow for varying operational requirements to be met. For example: when a power demand on the engine lower than a predetermined threshold, control may be effected by opening a primary inlet port and closing a secondary inlet port; and, when the power demand exceeds the predetermined threshold, control may be effected by opening the primary inlet port and opening the secondary inlet port, the secondary inlet port being located such as to be in communication with the exhaust port throughout portions of the revolution of the engine to purge exhaust gases of the engine.

No. of Pages : 22 No. of Claims : 20

(12) PATENT APPLICATION PUBLICATION
(19) INDIA
(22) Date of filing of Application :18/07/2012
(21) Application No.2229/DEL/2012 A
(43) Publication Date : 31/01/2014

(54) Title of the invention : ELEVATOR GROUP MANAGEMENT SYSTEM

(51) International classification :B66B
(31) Priority Document No :2011-187965
(32) Priority Date :30/08/2011
(33) Name of priority country :Japan
(86) International Application No :NA
Filing Date :NA
(87) International Publication No : NA
(61) Patent of Addition to Application Number :NA
Filing Date :NA
(62) Divisional to Application Number :NA
Filing Date :NA

(71)**Name of Applicant :**
1)TOSHIBA ELEVATOR KABUSHIKI KAISHA
Address of Applicant :5-27, KITASHINAGAWA 6-CHOME, SHINAGAWA-KU, TOKYO,JAPAN
(72)**Name of Inventor :**
1)NORIMASA ASANO

(57) Abstract :
According to one embodiment, an elevator group management system includes a relative estimation calculator configured to calculate relative values obtained by estimating relative positions of the cars for a users passing gate, an assignment controller configured to select a car which is caused to respond to the destination floor of the user among the cars, based on the relative estimation values calculated by the relative estimation calculator and assignment estimation values of the cars obtained by ordinary assignment control, and a display unit configured to display information of the car selected by the assignment controller on the users passing gate.

No. of Pages : 33 No. of Claims : 7

(12) PATENT APPLICATION PUBLICATION
(19) INDIA
(22) Date of filing of Application :24/07/2012
(21) Application No.2292/DEL/2012 A
(43) Publication Date : 31/01/2014

(54) Title of the invention : TRANSFORMER FOR WIND POWER GENERATION AND WIND POWER GENERATION SYSTEM

(51) International classification :H01F
(31) Priority Document No :2011-161541
(32) Priority Date :25/07/2011
(33) Name of priority country :Japan
(86) International Application No :NA
Filing Date :NA
(87) International Publication No : NA
(61) Patent of Addition to Application Number :NA
Filing Date :NA
(62) Divisional to Application Number :NA
Filing Date :NA

(71)**Name of Applicant :**
1)HITACHI INDUSTRIAL EQUIPMENT SYSTEMS CO., LTD.
Address of Applicant :3, KANDA NERIBEI-CHO, CHIYODA-KU, TOKYO 101-0022, JAPAN
(72)**Name of Inventor :**
1)HAYASHI NORIYUKI
2)MATSUO TAKAHIDE
3)SHIRAHATA TOSHIKI
4)ONO JUNJI
5)OHAMA HIDEHARU

(57) Abstract :
A transformer for wind power generation is configured such that the transformers main body, which contains an insulating refrigerant in a tank where an iron core and windings mounted to the iron core are contained, is disposed in a tower which configures a wind power generation system, and that water surrounding the wind power generation system is used as a secondary refrigerant for cooling the aforementioned refrigerant.

No. of Pages : 36 No. of Claims : 14

(12) PATENT APPLICATION PUBLICATION
(19) INDIA
(22) Date of filing of Application :16/07/2012
(21) Application No.2195/DEL/2012 A
(43) Publication Date : 31/01/2014

(54) Title of the invention : CONTROL SYSTEM AND CONTROL METHOD FOR ELECTRIC BICYCLE

(51) International classification :H02J
(31) Priority Document No :201110204408.7
(32) Priority Date :18/07/2011
(33) Name of priority country :China
(86) International Application No :NA
Filing Date :NA
(87) International Publication No : NA
(61) Patent of Addition to Application Number :NA
Filing Date :NA
(62) Divisional to Application Number :NA
Filing Date :NA

(71)**Name of Applicant :**
1)O2 MICRO, INC.
Address of Applicant :3118 PATRICK HENRY DRIVE SANTA CLARA, CALIFORNIA 95054 U.S.A.
(72)**Name of Inventor :**
1)WENBO ZHANG
2)WENHUA CUI
3)WEI ZHANG

(57) Abstract :
A system and methods for controlling an electric motor in an electric vehicle is provided. The system includes a battery management system and a motor controller. The battery management system monitors output voltage of each individual cell unit in a battery pack with a plurality of cell units and generates a state signal and a count value according to the monitored output voltages. The motor controller receives the state signal and the count value from the battery management system and controls the output current to the electrical motor. The battery management system generates the state signal in a first state if none of the monitored output voltages is below a predefined voltage for a period longer than a predefined period. The battery management system increases the count value each time a monitored output voltage drops below the predefined voltage. The cell units in the battery pack are protected by the battery management system.

No. of Pages : 28 No. of Claims : 14

(12) PATENT APPLICATION PUBLICATION
(19) INDIA
(22) Date of filing of Application :20/07/2012
(21) Application No.2255/DEL/2012 A
(43) Publication Date : 31/01/2014

(54) Title of the invention : DISPLAY AND ELECTRONIC UNIT

(51) International classification :H05K
(31) Priority Document No :2011166667
(32) Priority Date :29/07/2011
(33) Name of priority country :Japan
(86) International Application No :NA
Filing Date :NA
(87) International Publication No : NA
(61) Patent of Addition to Application Number :NA
Filing Date :NA
(62) Divisional to Application Number :NA
Filing Date :NA

(71)**Name of Applicant :**
1)SONY CORPORATION
Address of Applicant :1-7-1 Konan Minato-ku Tokyo Japan
(72)**Name of Inventor :**
1)HIROFUMI NAKAMURA
2)NOBUHIDE YONEYA
3)TORU TANIKAWA
4)SHOTA NISHI
5)SHIN AKASAKA
6)SATOSHI KUMON

(57) Abstract :
THERE ARE PROVIDED A DISPLAY IN WHICH A SEALING SECTION IS PREVENTED FROM BEING SPREAD AND THE SEALING SECTION IS ALLOWED TO BE PROVIDED IN A DESIRED REGION, AND AN ELECTRONIC UNIT INCLUDING THE DISPLAY. THE DISPLAY INCLUDES: A SUBSTRATE INCLUDING A SEALING REGION AND A STEP SECTION, THE SEALING REGION SURROUNDING A DISPLAY REGION, AND THE STEP SECTION SURROUNDING THE SEALING REGION FROM OUTSIDE; A DISPLAY LAYER PROVIDED IN THE DISPLAY REGION; AND A SEALING SECTION PROVIDED IN THE SEALING REGION.

No. of Pages : 31 No. of Claims : 7

(12) PATENT APPLICATION PUBLICATION
(19) INDIA
(22) Date of filing of Application :27/07/2012
(21) Application No.2317/DEL/2012 A
(43) Publication Date : 31/01/2014

(54) Title of the invention : IMAGE PROCESSING APPARATUS IMAGE PROCESSING METHOD AND PROGRAM

(51) International classification :G01N
(31) Priority Document No :2011171039
(32) Priority Date :04/08/2011
(33) Name of priority country :Japan
(86) International Application No :NA
Filing Date :NA
(87) International Publication No : NA
(61) Patent of Addition to Application Number :NA
Filing Date :NA
(62) Divisional to Application Number :NA
Filing Date :NA

(71)**Name of Applicant :**
1)SONY CORPORATION
Address of Applicant :1-7-1 Konan Minato-ku Tokyo Japan
(72)**Name of Inventor :**
1)SEIJI KOBAYASHI
2)ATSUSHI ITO

(57) Abstract :
THERE IS PROVIDED AN IMAGING ELEMENT THAT PHOTOGRAPHS MULTIPLE VIEWING POINT IMAGES CORRESPONDING TO IMAGES OBSERVED FROM DIFFERENT VIEWING POINTS AND AN IMAGE PROCESSING UNIT SEPARATES AN OUTPUT SIGNAL OF THE IMAGING ELEMENT, ACQUIRES THE 5 PLURALITY OF VIEWING POINT IMAGES CORRESPONDING TO THE IMAGES OBSERVED FROM THE DIFFERENT VIEWING POINTS, AND GENERATES A LEFT EYE IMAGE AND A RIGHT EYE IMAGE FOR THREE-DIMENSIONAL IMAGE DISPLAY, ON THE BASIS OF THE PLURALITY OF ACQUIRED VIEWING POINT IMAGES. THE IMAGE PROCESSING UNIT GENERATES PARALLAX INFORMATION ON THE BASIS OF THE PLURALITY OF VIEWING POINT IMAGES OBTAINED FROM THE IMAGING ELEMENT AND 10 GENERATES A LEFT EYE IMAGE AND A RIGHT EYE IMAGE FOR THREE-DIMENSIONAL IMAGE DISPLAY BY 2D3D CONVERSION PROCESSING USING THE GENERATED PARALLAX INFORMATION. BY THIS CONFIGURATION, A PLURALITY OF VIEWING POINT IMAGES ARE ACQUIRED ON THE BASIS OF ONE PHOTOGRAPHED IMAGE AND IMAGES FOR THREE-DIMENSIONAL IMAGE DISPLAY ARE GENERATED.

No. of Pages : 105 No. of Claims : 15

(12) PATENT APPLICATION PUBLICATION
(19) INDIA
(22) Date of filing of Application :18/07/2012
(21) Application No.2232/DEL/2012 A
(43) Publication Date : 31/01/2014

(54) Title of the invention : APPARATUS AND METHOD FOR CONTACTING A SOLAR CELL

(51) International classification :G01R
(31) Priority Document No :EP11174549
(32) Priority Date :19/07/2011
(33) Name of priority country :EUROPEAN UNION
(86) International Application No :NA
Filing Date :NA
(87) International Publication No : NA
(61) Patent of Addition to Application Number :NA
Filing Date :NA
(62) Divisional to Application Number :NA
Filing Date :NA

(71)**Name of Applicant :**
1)Andr Richter
Address of Applicant :Am B¼senbach 60 Handeloh-Wrme Germany
(72)**Name of Inventor :**
1)Andr Richter

(57) Abstract :
The invention relates to an apparatus for electrically contacting a solar cell or a solar cell module particularly for testing its performance the solar cell or the solar cell module having an electrical contact the apparatus comprising: a receiving volume for receiving a solar cell or a solar cell module at least one fluid space for receiving an electrically conducting fluid the fluid space being arranged with respect to the receiving volume such that a fluid in the fluid space at least partially covers an electrical contact of a solar cell or a solar cell module when being received by the receiving volume and electrical transmitting means for connecting the fluid in the fluid space with a measurement device (I U) in an electrically conducting manner.

No. of Pages : 20 No. of Claims : 15

(12) PATENT APPLICATION PUBLICATION
(19) INDIA
(22) Date of filing of Application :24/07/2012
(21) Application No.2297/DEL/2012 A
(43) Publication Date : 31/01/2014

(54) Title of the invention : MEMS MICROPHONE WITH A BUILT-IN TEXTILE MATERIAL PROTECTING SCREEN

(51) International classification :D06N1/00
(31) Priority Document No :MI2011A001579
(32) Priority Date :02/09/2011
(33) Name of priority country :Italy
(86) International Application No :NA
Filing Date :NA
(87) International Publication No : NA
(61) Patent of Addition to Application Number :NA
Filing Date :NA
(62) Divisional to Application Number :NA
Filing Date :NA

(71)**Name of Applicant :**
1)SAATI S.p.A.
Address of Applicant :Via Milano 14 I-22070 Appiano Gentile Como Italy
(72)**Name of Inventor :**
1)MIETTA Marco
2)CANONICO Paolo

(57) Abstract :
A MEMS microphone with a built-in textile material protecting screen comprises a microphone body having an opening thereat is arranged a textile material protecting screen which is built-in in the microphone body during the production phase of the MEMS device called packaging□.

No. of Pages : 13 No. of Claims : 4

(12) PATENT APPLICATION PUBLICATION
(19) INDIA
(22) Date of filing of Application :22/06/2012
(21) Application No.1920/DEL/2012 A
(43) Publication Date : 31/01/2014

(54) Title of the invention : A SAFETY DOOR SYSTEM

(51) International classification :A47B
(31) Priority Document No :NA
(32) Priority Date :NA
(33) Name of priority country :NA
(86) International Application No :NA
Filing Date :NA
(87) International Publication No : NA
(61) Patent of Addition to Application Number :NA
Filing Date :NA
(62) Divisional to Application Number :NA
Filing Date :NA

(71)**Name of Applicant :**
1)AKHLAQ AHMED KHAN
Address of Applicant :D-1417, JAHANGIR PURI, DELHI - 110033 India
(72)**Name of Inventor :**
1)AKHLAQ AHMED KHAN

(57) Abstract :
This invention relates to a safety door system comprising of a lock, a hook attached with a switch holder for holding a switch in position and a plurality of conductors provided in connection with a buzzer.

No. of Pages : 11 No. of Claims : 10

(12) PATENT APPLICATION PUBLICATION
(19) INDIA
(22) Date of filing of Application :19/07/2012
(21) Application No.2243/DEL/2012 A
(43) Publication Date : 31/01/2014

(54) Title of the invention : METHOD AND DEVICE FOR DETECTING OBJECTS FROM THE VEHICLE SURROUNDINGS OF A VEHICLE

(51) International classification :B60Q
(31) Priority Document No :102011079707.6
(32) Priority Date :25/07/2011
(33) Name of priority country :Germany
(86) International Application No :NA
Filing Date :NA
(87) International Publication No : NA
(61) Patent of Addition to Application Number :NA
Filing Date :NA
(62) Divisional to Application Number :NA
Filing Date :NA

(71)**Name of Applicant :**
1)ROBERT BOSCH GMBH
Address of Applicant :POSTFACH 30 02 20, 70442 STUTTGART, GERMANY
(72)**Name of Inventor :**
1)KARL, MATTHIAS

(57) Abstract :
A method for detecting objects from vehicle surroundings of a vehicle, wherein a plurality of signals suitable for signal processing, particularly electrical signals, are generated by at least one sensor (20) for vehicle surroundings monitoring of acoustic signals is described. The method includes analyzing the plurality of signals with respect to comparable features and issuing a warning to a driver on presence of a possible collision of the vehicle with a detected object and/or actively intervening in the vehicle dynamics and/or activating functions to reduce or avoid an accident severity. In an implementation, the method includes using acoustic signals from the vehicle surroundings for detecting at least a first object from the vehicle surroundings that impinges from at least one first predefined direction on the vehicle and comprise functionally intrinsic noise and/or ambient noise of the vehicle surroundings generated from the vehicle.

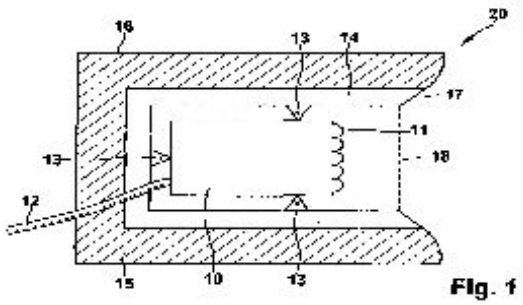

Fig. 1

No. of Pages : 16 No. of Claims : 11

(12) PATENT APPLICATION PUBLICATION
(19) INDIA
(22) Date of filing of Application :24/07/2012
(21) Application No.6509/DELNP/2012 A
(43) Publication Date : 31/01/2014

(54) Title of the invention : FLUID MACHINERY

(51) International classification :F04B 39/02
(31) Priority Document No :2010-018425
(32) Priority Date :29/01/2010
(33) Name of priority country :Japan
(86) International Application No :PCT/JP2011/000459
Filing Date :27/01/2011
(87) International Publication No : NA
(61) Patent of Addition to Application Number :NA
Filing Date :NA
(62) Divisional to Application Number :NA
Filing Date :NA

(71)**Name of Applicant :**
1)SANDEN CORPORATION
Address of Applicant :20 Kotobuki-cho Isesaki-shi Gunma 372-8502 Japan
(72)**Name of Inventor :**
1)NORIYUKI KOBAYASHI

(57) Abstract :
To provide a fluid machine improved in lubrication performance and reliability. [Means for Attaining the Purpose] A fluid machine (1), in which a driving unit (4) and a driven unit (6) to which driving force of the driving unit is transmitted through a rotary shaft (14) are housed in a hermetic container (2), includes anoil reservoir (76) located at an inside bottom (2a) of the hermetic container and storing lubricating oil, and an oil feed mechanism (70, 72) configured to rotate together with the rotary shaft to supply the lubricating oil in the oil reservoir to individual sliding parts of the driving and driven units, wherein the hermetic container has a baffle section (90) provided on an inner wall (80d) thereof and configured to disturb a circumferential flow of the lubricating oil along the inner wall.

No. of Pages : 29 No. of Claims : 8

(12) PATENT APPLICATION PUBLICATION
(19) INDIA
(22) Date of filing of Application :13/07/2012
(21) Application No.2180/DEL/2012 A
(43) Publication Date : 31/01/2014

(54) Title of the invention : POSITIONING APPARATUS OF CAM PLATE FOR VEHICULAR AIR CONDITIONING SYSTEM

(51) International classification	:F16H
(31) Priority Document No	:10-2011-0105743
(32) Priority Date	:17/10/2011
(33) Name of priority country	:Republic of Korea
(86) International Application No	:NA
Filing Date	:NA
(87) International Publication No	: NA
(61) Patent of Addition to Application Number	:NA
Filing Date	:NA
(62) Divisional to Application Number	:NA
Filing Date	:NA

(71)**Name of Applicant :**
1)HYUNDAI MOTOR COMPANY
Address of Applicant :231 YANGJAE-DONG, SEOCHO-KU, SEOUL, 137-938 REPUBLIC OF KOREA.
2)KIA MOTORS CORP.
3)HALLA CLIMATE CONTROL CORP.
(72)**Name of Inventor :**
1)LEE YOON HYUNG
2)PARK TAE YONG

(57) Abstract :
A positioning apparatus of a cam plate for a vehicular air conditioning system may include the cam plate rotatably coupled to an air conditioning case by a cam shaft and including a guide slot, a plurality of positioning holes formed in the cam plate, a detent mechanism projecting from the air conditioning case toward the cam plate, and an arm rotatably coupled to the air conditioning case and including a connecting pin that may be slidably coupled to the guide slot of the cam plate, wherein, while the cam plate rotates about the cam shaft and the connecting pin included in the arm performs a camming action along the guide slot formed in the cam plate, a leading end of the detent mechanism may be selectively inserted into one of the positioning holes to detent the position of the cam plate when the connecting

No. of Pages : 21 No. of Claims : 7

(12) PATENT APPLICATION PUBLICATION
(19) INDIA
(22) Date of filing of Application :24/07/2012
(21) Application No.2294/DEL/2012 A
(43) Publication Date : 31/01/2014

(54) Title of the invention : REDISPERSIBLE POLYMER POWDER FROM POLYOLEFIN DISPERSIONS AND THE USE THEREOF IN CONSTRUCTION APPLICATIONS

(51) International classification :C08F
(31) Priority Document No :61/512,154
(32) Priority Date :27/07/2011
(33) Name of priority country :U.S.A.
(86) International Application No :NA
Filing Date :NA
(87) International Publication No : NA
(61) Patent of Addition to Application Number :NA
Filing Date :NA
(62) Divisional to Application Number :NA
Filing Date :NA

(71)**Name of Applicant :**
1)DOW GLOBAL TECHNOLOGIES LLC
Address of Applicant :2040 Dow Center Midland Michigan 48674 U.S.A.
(72)**Name of Inventor :**
1)ROBERT BAUMANN
2)SANDRA D. HOFMANN
3)HARTMUT KUEHN
4)MARGARITA PERELLO

(57) Abstract :
THE PRESENT INVENTION PROVIDES COMPOSITIONS COMPRISING REDISPERSIBLE POLYMER POWDERS OF POLYOLEFINS WITH CARBOXYL GROUP CONTAINING DISPERSANT POLYMERS AND VINYL ESTER COPOLYMERS WHICH MAY FURTHER COMPRISE HYDRAULIC OR WATER CURABLE INORGANIC CEMENTS FOR 5 VARIOUS CONSTRUCTION APPLICATIONS, SUCH AS CEMENT TILE ADHESIVES. METHODS OF MAKING REDISPERSIBLE POLYMER POWDERS OF POLYOLEFINS ARE ALSO PROVIDED , INCLUDING FORMING AN AQUEOUS POLYOLEFIN DISPERSION, SUCH AS, FOR EXAMPLE, BY MECHANICAL DISPERSION , FOLLOWED BY DRYING TO FORM THE REDISPERSIBLE POLYMER POWDERS.

No. of Pages : 19 No. of Claims : 10

(12) PATENT APPLICATION PUBLICATION
(19) INDIA
(22) Date of filing of Application :24/07/2012
(21) Application No.2295/DEL/2012 A
(43) Publication Date : 31/01/2014

(54) Title of the invention : DOUBLE TUBE TYPE HEAT EXCHANGE PIPE

(51) International classification :F28D
(31) Priority Document No :20-2011-0006795
(32) Priority Date :26/07/2011
(33) Name of priority country :Republic of Korea
(86) International Application No :NA
Filing Date :NA
(87) International Publication No : NA
(61) Patent of Addition to Application Number :NA
Filing Date :NA
(62) Divisional to Application Number :NA
Filing Date :NA

(71)**Name of Applicant :**
1)CHOI GUN SHIK
Address of Applicant :102-702 Ssangyong Sweet Dot Home Apt. 30 34-gil Wau-ro Bongdam-eup Hwaseong-si Gyeonggi-do 445-726 REPUBLIC OF KOREA.
(72)**Name of Inventor :**
1)CHOI GUN SHIK

(57) Abstract :
Provided is a double tube type heat exchange pipe in which a gas or liquid coolant passes through a flow path hole to cool an inner tube the gas or liquid coolant supplied through through-holes of an outer tube is collected in a first collecting groove formed in an inner tube the gas and liquid coolant is guided to a spiral groove of the inner tube and continuously collides with a plurality of protrusions to undergo heat exchange and be cooled and the cooled gas and liquid coolant is collected in a second collecting groove of the inner tube to be discharged to the outside via the through-hole of the outer tube.....

No. of Pages : 20 No. of Claims : 6

(12) PATENT APPLICATION PUBLICATION
(19) INDIA
(22) Date of filing of Application :14/09/2010
(21) Application No.2187/DEL/2010 A
(43) Publication Date : 31/01/2014

(54) Title of the invention : AN IMPROVED DOOR

(51) International classification :B60J
(31) Priority Document No :NA
(32) Priority Date :NA
(33) Name of priority country :NA
(86) International Application No :NA
Filing Date :NA
(87) International Publication No :NA
(61) Patent of Addition to Application Number :NA
Filing Date :NA
(62) Divisional to Application Number :NA
Filing Date :NA

(71)**Name of Applicant :**
1)MARUTI SUZUKI INDIA LIMITED
Address of Applicant :1, NELSON MANDELA ROAD, VASANT KUNJ, NEW DELHI-110070, INDIA.
(72)**Name of Inventor :**
1)KARTIK KAPOOR
2)ARPIT KAPILA
3)CHINMOY MAZUMDAR
4)S. K. SRIRAM

(57) Abstract :
This invention relates to an improved door.

No. of Pages : 13 No. of Claims : 6

(12) PATENT APPLICATION PUBLICATION
(19) INDIA
(22) Date of filing of Application :16/07/2012
(21) Application No.2196/DEL/2012 A
(43) Publication Date : 31/01/2014

(54) Title of the invention : YARN PROCESSING DEVICE AND YARN WINDING DEVICE

(51) International classification :D01H1/00
(31) Priority Document No :2011-206334
(32) Priority Date :21/09/2011
(33) Name of priority country :Japan
(86) International Application No :NA
Filing Date :NA
(87) International Publication No : NA
(61) Patent of Addition to Application Number :NA
Filing Date :NA
(62) Divisional to Application Number :NA
Filing Date :NA

(71)**Name of Applicant :**
1)MURATA MACHINERY, LTD.
Address of Applicant :3 MINAMI OCHIAI-CHO, KISSHOIN, MINAMI-KU, KYOTO-SHI, KYOTO 601-8326 JAPAN
(72)**Name of Inventor :**
1)SATO MOTOHIKO
2)UMEOKA TOSHINARI

(57) Abstract :
A splicer (8) is a device that carries out processing of joining yarn ends as processing of a yarn, and includes an operation mechanism (80) that performs a plurality of operations to carry out the processing of joining the yarn ends, and a cam mechanism (60) that controls the operation of the operation mechanism (80). The cam mechanism (60) includes a plurality of pattern portions corresponding to each operation of the operation mechanism (80).

No. of Pages : 54 No. of Claims : 19

(12) PATENT APPLICATION PUBLICATION
(19) INDIA
(22) Date of filing of Application :16/07/2012
(21) Application No.2197/DEL/2012 A
(43) Publication Date : 31/01/2014

(54) Title of the invention : SEAT MOUNTING STRUCTURE FOR MOTORCYCLE

(51) International classification :B65G
(31) Priority Document No :2011-159277
(32) Priority Date :20/07/2011
(33) Name of priority country :Japan
(86) International Application No :NA
Filing Date :NA
(87) International Publication No : NA
(61) Patent of Addition to Application Number :NA
Filing Date :NA
(62) Divisional to Application Number :NA
Filing Date :NA

(71)**Name of Applicant :**
1)SUZUKI MOTOR CORPORATION
Address of Applicant :300 TAKATSUKA-CHO, MINAMI-KU, HAMAMATSU-SHI, SHIZUOKA-KEN 432-8611 JAPAN.
(72)**Name of Inventor :**
1)NATSUIZAKA HITOSHI

(57) Abstract :
A motorcycle is provided with a seat which is mounted to a vehicle body frame by a seat mounting structure so as to be detachable from the vehicle body frame by being moved relative to the vehicle body frame in a longitudinal direction of the vehicle body, and when a hook member of a seat hook provided at a seat bottom plate of the seat is held by a seat lock device arranged at the vehicle body frame, the seat is fixed to the vehicle body frame. The seat hook includes a front support portion and a rear support portion which are integrally provided so as to extend vertically from the seat bottom plate, and the hook member extends laterally between the front support portion and the rear support portion, and a load receiving portion which contacts a vehicle body support portion provided at the vehicle body frame is formed integrally with at least one of the front support portion and the rear support portion.

No. of Pages : 27 No. of Claims : 5

(12) PATENT APPLICATION PUBLICATION
(19) INDIA
(22) Date of filing of Application :27/07/2012
(21) Application No.2320/DEL/2012 A
(43) Publication Date : 31/01/2014

(54) Title of the invention : A BUSBAR ADAPTER COMPRISING A MOUNTING RAIL FOR ATTACHING A SWITCHING DEVICE

(51) International classification :H02J
(31) Priority Document No :102011052381.2
(32) Priority Date :03/08/2011
(33) Name of priority country :Germany
(86) International Application No :NA
Filing Date :NA
(87) International Publication No : NA
(61) Patent of Addition to Application Number :NA
Filing Date :NA
(62) Divisional to Application Number :NA
Filing Date :NA

(71)**Name of Applicant :**
1)RITTAL GMBH & CO. KG
Address of Applicant :AUF DEM STUTZELBERG, 35745 HERBON, GERMANY
(72)**Name of Inventor :**
1)KAYMA, JORG
2)PLATH, PIERRE
3)KUSTER, FRANK
4)KIENHOLZ, MATTHIAS

(57) Abstract :
The invention relates to a busbar adapter comprising a mounting rail for attaching a switching device to the busbar adapter wherein said mounting rail can be attached to the busbar adapter at different positions, characterized in that the mounting rail comprises leg elements and the busbar adapter comprises passages through which a respective one of the leg elements of the mounting rail extend with a latch from a first boundary surface of the passages on which the mounting rail rests, to a second boundary surface of the passages such that the respective latch of the leg elements is, with a retaining surface thereof, arranged in a distance to the second boundary surface which corresponds to a dimension of a slider positively insertable between the retaining surface and the second boundary surface.

No. of Pages : 11 No. of Claims : 7

(12) PATENT APPLICATION PUBLICATION
(19) INDIA
(22) Date of filing of Application :30/07/2012
(21) Application No.2339/DEL/2012 A
(43) Publication Date : 31/01/2014

(54) Title of the invention : IMPROVED SHELL FUNCTIONALIZED ION EXCHANGE RESINS

(51) International classification :B01J
(31) Priority Document No :61/529,469
(32) Priority Date :31/08/2011
(33) Name of priority country :U.S.A.
(86) International Application No :NA
Filing Date :NA
(87) International Publication No : NA
(61) Patent of Addition to Application Number :NA
Filing Date :NA
(62) Divisional to Application Number :NA
Filing Date :NA

(71)**Name of Applicant :**
1)DOW GLOBAL TECHNOLOGIES LLC
Address of Applicant :2040 Dow Center Midland Michigan 48674 U.S.A.
(72)**Name of Inventor :**
1)WILLIAM L. HARRIS

(57) Abstract :
THE PRESENT INVENTION RELATES TO A METHOD FOR THE PRODUCTION OF IMPROVED SHELL FUNCTIONALIZED ION EXCHANGE RESINS FROM CORE/SHELL COPOLYMER HAVING A HIGHLY CROSSLINKED 5 CORE.

No. of Pages : 14 No. of Claims : 12

(12) PATENT APPLICATION PUBLICATION
(19) INDIA
(22) Date of filing of Application :27/07/2012
(21) Application No.2336/DEL/2012 A
(43) Publication Date : 31/01/2014

(54) Title of the invention : DATA STORAGE SYSTEM AND OPERATING METHOD THEREOF

(51) International classification :G06F
(31) Priority Document No :100127097
(32) Priority Date :29/07/2011
(33) Name of priority country :Taiwan
(86) International Application No :NA
Filing Date :NA
(87) International Publication No : NA
(61) Patent of Addition to Application Number :NA
Filing Date :NA
(62) Divisional to Application Number :NA
Filing Date :NA

(71)**Name of Applicant :**
1)SAN DER SAVING ENERGY TECHNOLOGY, LTD.
Address of Applicant :2F., NO.8, LN.130, MINCYUAN RD., XINDIAN DIST., NEW TAIPEI CITY 231, TAIWAN
2)LIANG-TSE LIN
(72)**Name of Inventor :**
1)LIANG-TSE LIN

(57) Abstract :
A data storage system includes a sensor unit, a storage unit, and a data exchange unit. The data exchange unit connects to the sensor unit and the storage unit, and transmits a data message received from the sensor unit to the storage unit, wherein the data exchange unit need not know the addresses of the sensor unit and the storage unit ahead of time to be able to successfully transmit the data message to the storage unit requesting the data message.

No. of Pages : 34 No. of Claims : 16

(12) PATENT APPLICATION PUBLICATION
(19) INDIA
(22) Date of filing of Application :13/07/2012
(21) Application No.2184/DEL/2012 A
(43) Publication Date : 31/01/2014

(54) Title of the invention : TRACKLAYING GEAR

(51) International classification :F16B
(31) Priority Document No :11005873.2
(32) Priority Date :18/07/2011
(33) Name of priority country :EPO
(86) International Application No :NA
Filing Date :NA
(87) International Publication No : NA
(61) Patent of Addition to Application Number :NA
Filing Date :NA
(62) Divisional to Application Number :NA
Filing Date :NA

(71)**Name of Applicant :**
1)Joseph Vgele AG
Address of Applicant :Joseph-Vgele-Strae 1 67067 Ludwigshafen/Rhein GERMANY
(72)**Name of Inventor :**
1)Arthur BRAUN

(57) Abstract :
In a tracklaying gear (5) of a road finishing machine or a feeder (F) with a drive chain wheel (T) comprising circumferential teeth (36) and being rotatably driven about an axis (X) and at least one idler wheel (L) freely rotating about an axis (X) inside a caterpillar track (R) damping layers (D) comprising damping material and exclusively radial sliding guides are integrated in the drive chain wheel (T) and/or the idler wheel (L) between the axis (X) and the caterpillar track (R).

No. of Pages : 22 No. of Claims : 10

(12) PATENT APPLICATION PUBLICATION
(19) INDIA
(22) Date of filing of Application :27/07/2012
(21) Application No.2366/DEL/2012 A
(43) Publication Date : 31/01/2014

(54) Title of the invention : DISPLAY METHOD DISPLAY DEVICE ELECTRONIC SYSTEM AND LIGHTING UNIT

(51) International classification :H04N
(31) Priority Document No :2011171926
(32) Priority Date :05/08/2011
(33) Name of priority country :Japan
(86) International Application No :NA
Filing Date :NA
(87) International Publication No : NA
(61) Patent of Addition to Application Number :NA
Filing Date :NA
(62) Divisional to Application Number :NA
Filing Date :NA

(71)**Name of Applicant :**
1)SONY CORPORATION
Address of Applicant :1-7-1 Konan Minato-ku Tokyo Japan
(72)**Name of Inventor :**
1)KENICHI TAKAHASHI
2)SATOSHI TOMIOKA
3)YOSHIHISA SATO
4)TETSURO KUWAYAMA
5)YUICHI TAKAI
6)TADASHI MORIMOTO

(57) Abstract :
A LIGHTING UNIT INCLUDES: A PLURALITY OF TWO-DIMENSIONALLY-ARRAYED LIGHT EMITTING SECTIONS; AND A DRIVE SECTION THAT DRIVES THE PLURALITY OF LIGHT EMITTING SECTIONS ON AN INDIVIDUAL BASIS.

No. of Pages : 83 No. of Claims : 12

(12) PATENT APPLICATION PUBLICATION
(19) INDIA
(22) Date of filing of Application :13/07/2012
(21) Application No.2181/DEL/2012 A
(43) Publication Date : 31/01/2014

(54) Title of the invention : AIR CONDITIONING SYSTEM FOR VEHICLE

(51) International classification	:F16H
(31) Priority Document No	:10-2011-0106000
(32) Priority Date	:17/10/2011
(33) Name of priority country	:Republic of Korea
(86) International Application No	:NA
Filing Date	:NA
(87) International Publication No	: NA
(61) Patent of Addition to Application Number	:NA
Filing Date	:NA
(62) Divisional to Application Number	:NA
Filing Date	:NA

(71)**Name of Applicant :**
1)HYUNDAI MOTOR COMPANY
Address of Applicant :231 YANGJAE-DONG, DEOCHO-KU, SEOUL, 137-938 REPUBLIC OF KOREA.
2)KIA MOTORS CORP.
3)HALLA CLIMATE CONTROL CORP.
(72)**Name of Inventor :**
1)LEE YOON HYUNG
2)PARK TAE YONG

(57) Abstract :
A vehicular air conditioning system may include a cam plate rotatably coupled to an air conditioning case via a cam shaft, wherein a portion of the cam plate may be connected to a regulating knob via a cable for selecting an air conditioning mode and wherein a portion of the cam plate may be integrally formed with a cam pivot projecting toward the air conditioning case, and an arm rotatably coupled to the air conditioning case via a door shaft and formed with a guide slot into which the cam pivot may be inserted, wherein the arm may be configured to rotate about the door shaft while the cam pivot pushes a portion of the guide slot as the cam plate rotates.

No. of Pages : 15 No. of Claims : 7

(12) PATENT APPLICATION PUBLICATION
(19) INDIA
(22) Date of filing of Application :13/07/2012
(21) Application No.2182/DEL/2012 A
(43) Publication Date : 31/01/2014

(54) Title of the invention : DIAPHRAGM PUMP USING DUCKBILL VALVES

(51) International classification :F01B
(31) Priority Document No :13/183,866
(32) Priority Date :15/07/2011
(33) Name of priority country :U.S.A.
(86) International Application No :NA
Filing Date :NA
(87) International Publication No : NA
(61) Patent of Addition to Application Number :NA
Filing Date :NA
(62) Divisional to Application Number :NA
Filing Date :NA

(71)**Name of Applicant :**
1)XYLEM IP HOLDINGS LLC.
Address of Applicant :1133 WESTCHESTER AVENUE, WHITE PLAINS, NEW YORK 10604, U.S.A.
(72)**Name of Inventor :**
1)VILLAGOMEZ, MANUEL
2)MEZA, HUMBERTO VALENZUELA
3)PHILLIPS, DAVID L.

(57) Abstract :
A diaphragm pump is provided that features a valve housing configured with inlet openings and outlet openings; inlet duckbill check valve assemblies, each configured to be arranged in a respective inlet opening; and outlet duckbill check valve assemblies, each configured to be arranged in a respective outlet opening; each duckbill check valve assembly comprising: a duckbill check valve seat configured with an end having a slit to open to provide the fluid and particulate, and to close to prevent the backflow of the fluid and particulate; and a duckbill check valve support having a base portion configured to be inserted inside the duckbill check valve seat, and having a W-shaped portion configured with an opening to pass the fluid and particulate through the duckbill check valve support to the duckbill check valve seat and also configured to provide support for walls of the duckbill check valve seat in response to back pressure caused by the fluid and particulate.

No. of Pages : 41 No. of Claims : 16

(12) PATENT APPLICATION PUBLICATION
(19) INDIA
(22) Date of filing of Application :13/02/2012
(21) Application No.397/DEL/2012 A
(43) Publication Date : 31/01/2014

(54) Title of the invention : INTERNAL BY-PASS CIRCUIT FOR AIR BLEEDING TO IMPROVE THE COOLING PERFORMANCE OF CYLINDER HEAD

(51) International classification :B61D
(31) Priority Document No :NA
(32) Priority Date :NA
(33) Name of priority country :NA
(86) International Application No :NA
Filing Date :NA
(87) International Publication No :NA
(61) Patent of Addition to Application Number :NA
Filing Date :NA
(62) Divisional to Application Number :NA
Filing Date :NA

(71)**Name of Applicant :**
1)MARUTI SUZUKI INDIA LIMITED
Address of Applicant :1, NELSON MANDELA ROAD, VASANT KUNJ, NEW DELHI-110070, INDIA
(72)**Name of Inventor :**
1)NARINDER KUMAR
2)ANKIT JALAN
3)AMIT GAUTAM
4)PRASENJIT KHAN

(57) Abstract :
This invention relates to Internal by-pass circuit for air bleeding to improve the cooling performance of cylinder head comprising of a cylinder head mounted on a cylinder block wherein water from radiator enters into the cylinder block water jacket, pressurized water from which does the cooling of said cylinder head in which the water jacket is accumulated with air, which reduces cooling efficiency of cylinder head, wherein for removal of air from said water jacket the cylinder head water jacket is provided with atleast one boss, which is drilled/atleast one press fitted union to create a by-pass passage internally from water jacket as shown in the accompanying figures.

No. of Pages : 18 No. of Claims : 4

(12) PATENT APPLICATION PUBLICATION
(19) INDIA
(22) Date of filing of Application :20/07/2012

(21) Application No.2268/DEL/2012 A
(43) Publication Date : 31/01/2014

(54) Title of the invention : COOLING SYSTEM FOR AN AIR CONDITIONER CONTROL BOX AND AIR CONDITIONER INCORPORATED WITH THE SAME

(51) International classification :F24F
(31) Priority Document No :PI 2011004285
(32) Priority Date :12/09/2011
(33) Name of priority country :Malaysia
(86) International Application No :NA
Filing Date :NA
(87) International Publication No : NA
(61) Patent of Addition to Application Number :NA
Filing Date :NA
(62) Divisional to Application Number :NA
Filing Date :NA

(71)**Name of Applicant :**
1)PANASONIC APPLIANCES AIR-CONDITIONING R&D MALAYSIA SDN. BHD.
Address of Applicant :LOT 2, PERSIARAN TENGKU AMPUAN, SEKSYEN 21, SHAH ALAM INDUSTRIAL SITE, 40300 SHAH ALAM, SELANGOR, MALAYSIA
(72)**Name of Inventor :**
1)YASUYUKI DOI
2)VIJAYAKUMAR SELVARAJU
3)LEU MING

(57) Abstract :
There is disclosed an out-door unit (1) of an air-conditioning apparatus that is being provided with a cooling means (6) for the control box (5), the cooling means is adapted to control heat build up so as to enable the air-conditioner to operate normally in the adverse hot weather conditions. The cooling means (6) is realized by arranging a small heat exchanger (10) within the control box (5), the heat exchanger (10) is further provided with cooling fan (11) to force cooled air to circulate within the control box (5) so as to it cool down, therefore cooling the heat-emitting components such as control board (8) including all electronic components inside it when the air-conditioner is in operation. (The most illustrative figure is Figure 3)

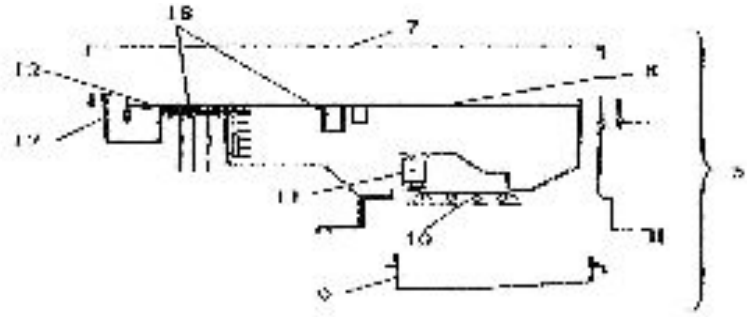

Figure 3

No. of Pages : 26 No. of Claims : 12

(12) PATENT APPLICATION PUBLICATION
(19) INDIA
(22) Date of filing of Application :27/07/2012
(21) Application No.2328/DEL/2012 A
(43) Publication Date : 31/01/2014

(54) Title of the invention : PLANETARY GEAR TRAIN AND CORRESPONDING PRODUCTION METHOD

(51) International classification :F16H
(31) Priority Document No :11425207.5
(32) Priority Date :29/07/2011
(33) Name of priority country :EPO
(86) International Application No :NA
Filing Date :NA
(87) International Publication No : NA
(61) Patent of Addition to Application Number :NA
Filing Date :NA
(62) Divisional to Application Number :NA
Filing Date :NA

(71)**Name of Applicant :**
1)AGUSTAWESTLAND S.P.A.
Address of Applicant :520 FRAZIONE CASCINA COSTA - VIA GIOVANNI AGUSTA, SAMARATE ITALY.
(72)**Name of Inventor :**
1)SARTORI SERGIO
2)OZZI FILIPPO
3)GASPARINI GIUSEPPE

(57) Abstract :
Described herein is a planetary gear train (6) for an aircraft (1) capable of fixed-point flight, comprising: a sun gear (7) that can turn about a first axis (A) and comprises a plurality of first teeth (11); a fixed crown wheel (8) comprising a plurality of second teeth (12); and at least two planetary gears (9a, 9b, 9c, 9d, 9e) , each comprising a plurality of third teeth (13), the planetary gears (9a, 9b, 9c, 9d, 9e) each meshing with the crown wheel (8) and the sun gear (7) and being able to turn about respective second axes (B), which are in turn able to turn about the first axis (A) ; at least two third teeth (13) simultaneously mesh with respective second teeth (12) and a further two third teeth (13) simultaneously mesh with respective first teeth (11) ; the third teeth (13) comprise a first side (16a) and a second side (16b), which have, respectively, a first pressure angle and a second pressure angle (α2) different from one another; and the number (ZP) of the third teeth (13) of each planetary gear (9a, 9b, 9c, 9d, 9e) is different from the absolute value of the semidifference ((ZC-ZS)/2) between the number (ZS) of the first teeth (11) of the sun gear (7) and the number (ZS) of the second teeth (12) of the crown wheel (8). (Figure 1)

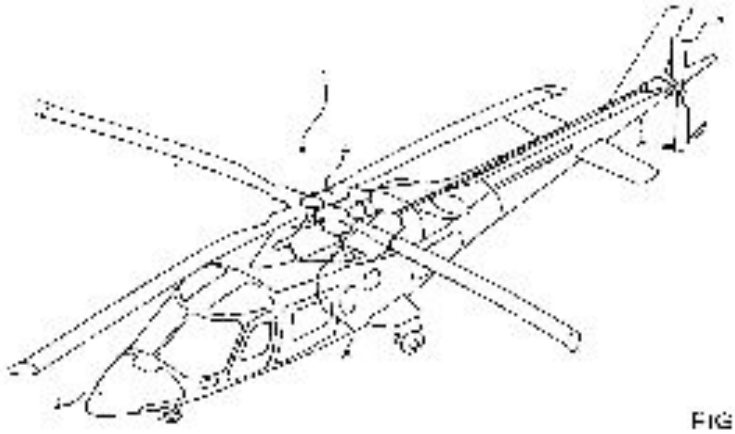

FIG. 1

No. of Pages : 31 No. of Claims : 17

(12) PATENT APPLICATION PUBLICATION
(19) INDIA
(22) Date of filing of Application :16/07/2012
(21) Application No.2191/DEL/2012 A
(43) Publication Date : 31/01/2014

(54) Title of the invention : ELECTROCHEMICAL DEVICE, METHOD AND ASSEMBLY

(51) International classification :H01M
(31) Priority Document No :13/189,867
(32) Priority Date :25/07/2011
(33) Name of priority country :U.S.A.
(86) International Application No :NA
Filing Date :NA
(87) International Publication No : NA
(61) Patent of Addition to Application Number :NA
Filing Date :NA
(62) Divisional to Application Number :NA
Filing Date :NA

(71)**Name of Applicant :**
1)GENERAL ELECTRIC COMPANY
Address of Applicant :1 RIVER ROAD, SCHENECTADY, NEW YORK 12345, U.S.A.
(72)**Name of Inventor :**
1)KALISH, PETER
2)SHAH, KASHYAP
3)FRUTSCHY, KRISTOPHER
4)TOWLE, STUART
5)BROWELL, JAMES
6)BULL, ROGER
7)KUMAR, AJITH KUTTANNAIR
8)MARLEY, MICHAEL PATRICK
9)BUTINE, JOHN D.
10)ELLSWORTH, HAROLD ALAN
11)DONNER, JOHN L.
12)PELKOWSKI, STEPHEN
13)QUIRION, OWEN SCOTT
14)JOHNSON, NEIL A.

(57) Abstract :
An electrochemical device (19) is disclosed that includes a plurality of cells (14) that each include a face (94), wherein a terminal (50,52) is disposed on the faces (94) of each respective cell (14). A bus bar (48) has a bus bar height and electrically couples the terminals (50,52) from cell-to-cell within the electrochemical device (19). A plurality of sheets (74) are disposed between the plurality of cells (14), the plurality of sheets (74) are substantially the same height as the combined height of each cell(14) and bus bar (48).

No. of Pages : 57 No. of Claims : 13

(12) PATENT APPLICATION PUBLICATION
(19) INDIA
(22) Date of filing of Application :16/07/2012
(21) Application No.2192/DEL/2012 A
(43) Publication Date : 31/01/2014

(54) Title of the invention : SYSTEM AND METHOD FOR AUTO -TUNING A COMBUSTION SYSTEM OF A GAS TURBINE

(51) International classification :B32D
(31) Priority Document No :CO2011A000028
(32) Priority Date :21/07/2011
(33) Name of priority country :Italy
(86) International Application No :NA
Filing Date :NA
(87) International Publication No : NA
(61) Patent of Addition to Application Number :NA
Filing Date :NA
(62) Divisional to Application Number :NA
Filing Date :NA

(71)**Name of Applicant :**
1)NUOVO PIGNONE S.P.A.
Address of Applicant :VIA FELICE MATTEUCCI, 2 50127 FLORENCE (IT) Italy
(72)**Name of Inventor :**
1)MOCHI, GIANNI
2)CECCHERINI, GIANNI
3)BARDI, FRANCESCO
4)GHELARDI, DAVID

(57) Abstract :
Controller, gas turbine, and method for auto-tuning a combustion system of a gas turbine. The method includes selecting a first tuning curve from a set of tuning curve for the gas turbine; unbalancing a stable operating point of the gas turbine by modifying one or more operational parameters based on a predefined recipe; determining tuning parameters and storing them while a current operating point of the gas turbine is brought back on the first tuning curve; and generating a backup of tuning parameters to recover the stable operating point.

No. of Pages : 31 No. of Claims : 10

(12) PATENT APPLICATION PUBLICATION
(19) INDIA
(22) Date of filing of Application :16/07/2012
(21) Application No.2193/DEL/2012 A
(43) Publication Date : 31/01/2014

(54) Title of the invention : HEAT RECOVERY SYSTEMS FOR BIOMASS GASIFICATION SYSTEMS

(51) International classification :C10J
(31) Priority Document No :13/215040
(32) Priority Date :22/08/2011
(33) Name of priority country :U.S.A.
(86) International Application No :NA
Filing Date :NA
(87) International Publication No : NA
(61) Patent of Addition to Application Number :NA
Filing Date :NA
(62) Divisional to Application Number :NA
Filing Date :NA

(71)**Name of Applicant :**
1)GENERAL ELECTRIC COMPANY
Address of Applicant :1 RIVER ROAD, SCHENECTADY, NEW YORK 12345, U.S.A.
(72)**Name of Inventor :**
1)MISHRA, NIRAJ KUMAR

(57) Abstract :
Biomass gasification systems including a reactor configured to gasify a dried biomass fuel in the presence of air to generate producer gas are provided. The biomass gasification systems also may include a heat exchanger adapted to transfer heat from the producer gas to a biomass feedstock to produce the dried biomass fuel and cooled producer gas.

No. of Pages : 31 No. of Claims : 20

(12) PATENT APPLICATION PUBLICATION
(19) INDIA
(22) Date of filing of Application :19/07/2012
(21) Application No.2251/DEL/2012 A
(43) Publication Date : 31/01/2014

(54) Title of the invention : FAULT DETECTION SYSTEM FOR A GENERATOR

(51) International classification :G01R
(31) Priority Document No :13/222441
(32) Priority Date :31/08/2011
(33) Name of priority country :U.S.A.
(86) International Application No :NA
Filing Date :NA
(87) International Publication No : NA
(61) Patent of Addition to Application Number :NA
Filing Date :NA
(62) Divisional to Application Number :NA
Filing Date :NA

(71)**Name of Applicant :**
1)GENERAL ELECTRIC COMPANY
Address of Applicant :1 RIVER ROAD, SCHENECTADY, NEW YORK 12345, U.S.A.
(72)**Name of Inventor :**
1)KLODOWSKI, ANTHONY MICHAEL
2)BARKER, SIDNEY ALLEN

(57) Abstract :
A fault detection system (50) is provided, and includes a generator (24), a power converter (26), a breaker (48), a current monitoring device (62), and a control module (28). The power converter (26) is selectively connected to the generator (24) and is selectively activated to produce a test voltage. The breaker (48) is located between the generator (24) and the power converter (26) for selectively connecting the generator (24) to the power converter (26). The breaker (48) includes an open position and a closed position. The current monitoring device (62) is located between the generator (24) and the power converter (26). The current monitoring device (62) measures a line current between the generator (24) and the power converter (26). The control module (28) is in communication with the current monitoring device (62) and the power converter (26). The control module (28) has a memory with a threshold current value.

No. of Pages : 22 No. of Claims : 10

(12) PATENT APPLICATION PUBLICATION
(19) INDIA
(22) Date of filing of Application :11/06/2010
(21) Application No.2569/DEL/2009 A
(43) Publication Date : 31/01/2014

(54) Title of the invention : AN IMPROVED FRONT SEAT BACK FOR CREATING SCOOP IN AUTOMOTIVE SEATING TO INCREASE LEG ROOM AND ENHANCE AESTHETICS

(51) International classification :B60N
(31) Priority Document No :NA
(32) Priority Date :NA
(33) Name of priority country :NA
(86) International Application No :NA
Filing Date :NA
(87) International Publication No :NA
(61) Patent of Addition to Application Number :NA
Filing Date :NA
(62) Divisional to Application Number :NA
Filing Date :NA

(71)**Name of Applicant :**
1)MARUTI SUZUKI INDIA LIMITED
Address of Applicant :1, NELSON MANDELA ROAD, VASANT KUNJ, NEW DELHI-110070, INDIA
(72)**Name of Inventor :**
1)RACHIT PANDAY
2)SUTAPA PATI
3)PRITPAL SINGH
4)NAVEEN SHEKHAR

(57) Abstract :
This invention relates to an improved front seat back for creating scoop in automotive seating to increase leg room and enhance aesthetics comprising of a seat back frame in contact with PU Pad in the front integrated with wires for clamping wherein the seat is covered by means of a trim including scoop area, generating additional leg space.

No. of Pages : 17 No. of Claims : 6

(12) PATENT APPLICATION PUBLICATION
(19) INDIA
(22) Date of filing of Application :27/08/2012
(21) Application No.2055/MUMNP/2012 A
(43) Publication Date : 31/01/2014

(54) Title of the invention : METHOD FOR MANUFACTURING GRAIN ORIENTED ELECTRICAL STEEL SHEET

(51) International classification :H01F1/16
(31) Priority Document No :2010-039389
(32) Priority Date :24/02/2010
(33) Name of priority country :Japan
(86) International Application No :PCT/JP2011/000989
Filing Date :22/02/2011
(87) International Publication No :WO/2011/105054
(61) Patent of Addition to Application Number :NA
Filing Date :NA
(62) Divisional to Application Number :NA
Filing Date :NA

(71)**Name of Applicant :**
1)JFE STEEL CORPORATION
Address of Applicant :2-3 Uchisaiwai-cho 2-chome Chiyoda-ku Tokyo 1000011 Japan.
(72)**Name of Inventor :**
1)OMURA Takeshi
2)HAYAKAWA Yasuyuki

(57) Abstract :
An object of the present invention is to propose a method for stably achieving a good iron loss reducing effect by rapid heating treatment of a steel sheet in a case where primary recrystallization annealing including rapid heating treatment is carried out in a method for manufacturing a grain oriented electrical steel sheet using an inhibitor-free material. Specifically, the present invention provides a method for manufacturing a grain oriented electrical steel sheet, comprising the steps of: preparing a steel slab in which contents of inhibitor components have been reduced, i.e. content of Al: 100 ppm or less, and contents of N, S and Se: 50 ppm, respectively; subjecting the steel slab to hot rolling and then either a single cold rolling process or two or more cold rolling processes interposing intermediate annealing(s) therebetween to obtain a steel sheet having the final sheet thickness; and subjecting the steel sheet to primary recrystallization annealing and then secondary recrystallization annealing, wherein the primary recrystallization annealing includes heating the steel sheet to temperature equal to or higher than 700°C at a heating rate of at least 150°C/s, cooling the steel sheet to a temperature range of 700°C or lower, and then heating the steel sheet to soaking temperature at the average heating rate not exceeding 40°C/s in a subsequent heating zone.

No. of Pages : 26 No. of Claims : 5

(12) PATENT APPLICATION PUBLICATION
(19) INDIA
(22) Date of filing of Application :27/08/2012
(21) Application No.2056/MUMNP/2012 A
(43) Publication Date : 31/01/2014

(54) Title of the invention : DEVICE FOR RECOVERING SWELL ENERGY

(51) International classification :F03B13/20
(31) Priority Document No :10 51388
(32) Priority Date :26/02/2010
(33) Name of priority country :France
(86) International Application No :PCT/EP2011/052725
Filing Date :24/02/2011
(87) International Publication No :WO/2011/104294
(61) Patent of Addition to Application Number :NA
Filing Date :NA
(62) Divisional to Application Number :NA
Filing Date :NA

(71)**Name of Applicant :**
1)RUIZ-DIEZ Jos-Antonio
Address of Applicant :24 ter route de Saint-Barthlmy 76930 OCTREVILLE SUR MER FRANCE.
(72)**Name of Inventor :**
1)RUIZ-DIEZ Jos-Antonio

(57) Abstract :
The invention relates to a device for recovering the energy of sea waves comprised of a floating structure comprising: - a rigid structural element (1) maintained floating on the sea thanks to at least one buoy or floater referred to as structural (2, 2), and - at least one mobile floater (3, 3) with regards to the structural element and cooperating with a means of generating recoverable energy (4; 14, 15, 16) under the effect of the movement of the waves, said means (4; 14, 15, 16) being fixed to the structural element. According to the invention, at least one mobile floater (3, 3) is connected to the structural element by at least one rigid arm (5, 5) mounted rotatingly around an axis substantially parallel to the surface of the sea and said means of generating energy (4; 14, 15, 16) is directly or indirectly linked to said rigid arm.

No. of Pages : 38 No. of Claims : 16

(12) PATENT APPLICATION PUBLICATION
(19) INDIA
(22) Date of filing of Application :27/08/2012
(21) Application No.2057/MUMNP/2012 A
(43) Publication Date : 31/01/2014

(54) Title of the invention : SURFACE TREATMENT AGENT FOR ZINC OR ZINC ALLOY COATED STEEL SHEET, ZINC OR ZINC ALLOY COATED STEEL SHEET, AND METHOD OF PRODUCING THE STEEL SHEET

(51) International classification	:C23C 22/40,B05D 7/14
(31) Priority Document No	:2010-043325
(32) Priority Date	:26/02/2010
(33) Name of priority country	:Japan
(86) International Application No	:PCT/JP2011/001098
Filing Date	:25/02/2011
(87) International Publication No	:WO/2011/105101
(61) Patent of Addition to Application Number	:NA
Filing Date	:NA
(62) Divisional to Application Number	:NA
Filing Date	:NA

(71)**Name of Applicant :**
1)JFE STEEL CORPORATION
Address of Applicant :2-3 Uchisaiwai-cho 2-chome Chiyoda-ku Tokyo 1000011 Japan.
(72)**Name of Inventor :**
1)IMOKAWA Toru
2)FUJIBAYASHI Nobue
3)KUBOTA Takahiro
4)HAMADA Etsuo
5)NAGOSHI Masayasu

(57) Abstract :
The present invention provides a chromium-free surface treatment agent, comprising: a resin compound having a specific bisphenol skeleton; cationic urethane resin emulsion; silane coupling agent; an organic titanium chelate compound; a quadrivalent vanadyl compound; a molybdic acid compound; and water, wherein these components are blended at predetermined ratios such that pH value of the surface treatment agent is in the range of 4 to 5. The one-pack type chromium-free surface treatment agent of the present invention exhibits good stability during storage and is capable of forming on a metal material surface a coating film excellent in corrosion resistance at a bending-processed portion of a steel sheet, solvent resistance and paintability after alkali degreasing.

No. of Pages : 50 No. of Claims : 4

(12) PATENT APPLICATION PUBLICATION
(19) INDIA
(22) Date of filing of Application :17/08/2012
(21) Application No.1987/MUMNP/2012 A
(43) Publication Date : 31/01/2014

(54) Title of the invention : MEDIUM AND HIGH VOLTAGE ELECTRIC SWITCH HAVING CLOSING RETURN AND DEVICE FOR INSERTING A RESISTOR

(51) International classification	:H01H 33/12,H01H33/16
(31) Priority Document No	:1051680
(32) Priority Date	:09/03/2010
(33) Name of priority country	:France
(86) International Application No	:PCT/EP2011/053466
Filing Date	:08/03/2011
(87) International Publication No	:WO/2011/110557
(61) Patent of Addition to Application Number	:NA
Filing Date	:NA
(62) Divisional to Application Number	:NA
Filing Date	:NA

(71)**Name of Applicant :**
1)ALSTOM TECHNOLOGY LTD
Address of Applicant :Brown Boveri Strasse 7 CH-5400 Baden Switzerland.
(72)**Name of Inventor :**
1)CIMALA Andr
2)MARQUEZIN Gwna«l

(57) Abstract :
Among other uses the switch is suitable for use in a resistance-inserting device that does not need additional mechanical moving parts. The device mainly comprises a flexible toroidal helical spring (8) placed in a groove of the control rod (1) and carrying the resistance-insertion contact (2) and springs (4) that are placed about the movable resistance-insertion contact and that are intended to be compressed until a certain value is reached at which value the flexible toroidal helical spring (8) deforms under the force and enables the movable resistance-insertion contact (2) to be withdrawn. For application to high- and very high-voltage circuit breakers and switches.

No. of Pages : 13 No. of Claims : 4

(12) PATENT APPLICATION PUBLICATION
(19) INDIA
(22) Date of filing of Application :17/08/2012
(21) Application No.1988/MUMNP/2012 A
(43) Publication Date : 31/01/2014

(54) Title of the invention : METHOD OF CALIBRATING GEAR MEASURING DEVICE

(51) International classification :G01B5/00,G01B5/20
(31) Priority Document No :2010085661
(32) Priority Date :02/04/2010
(33) Name of priority country :Japan
(86) International Application No :PCT/JP2011/057279
Filing Date :25/03/2011
(87) International Publication No :WO 2011/125533
(61) Patent of Addition to Application Number :NA
Filing Date :NA
(62) Divisional to Application Number :NA
Filing Date :NA

(71)**Name of Applicant :**
1)MITSUBISHI HEAVY INDUSTRIES LTD.
Address of Applicant :16 5 Konan 2 chome Minato ku Tokyo 1088215 Japan
(72)**Name of Inventor :**
1)MASUO Koichi
2)OTSUKI Naohiro
3)YANASE Yoshikoto

(57) Abstract :
A difference of tooth profile gradient errors (a) is calculated which is a deviation between the tooth profile gradient error (a1) when the tooth profile of a gear is calculated by a method of scanning in a tangential direction of a base circle; and the tooth profile gradient error (a2) when the tooth profile of a gear is calculated by scanning methods other than a method of scanning in a tangential direction of a base circle. The position error (x) is calculated using the difference of tooth profile gradient errors (a) and gear specifications and the position of the gauge head is calibrated depending on the position error (x). Hereby the position of the gauge head can be calibrated without using a mechanical reference member.

No. of Pages : 36 No. of Claims : 2

(12) PATENT APPLICATION PUBLICATION
(19) INDIA
(22) Date of filing of Application :17/08/2012
(21) Application No.1989/MUMNP/2012 A
(43) Publication Date : 31/01/2014

(54) Title of the invention : SHAPE MEASUREMENT DEVICE FOR MACHINE TOOL WORKPIECE

(51) International classification	:B23Q17/20,B23Q17/24,G05B19/409
(31) Priority Document No	:NA
(32) Priority Date	:NA
(33) Name of priority country	:NA
(86) International Application No	:PCT/JP2010/057262
Filing Date	:23/04/2010
(87) International Publication No	:WO 2011/132315
(61) Patent of Addition to Application Number	:NA
Filing Date	:NA
(62) Divisional to Application Number	:NA
Filing Date	:NA

(71)**Name of Applicant :**
1)MITSUBISHI HEAVY INDUSTRIES LTD.
Address of Applicant :16 5 Konan 2 chome Minato ku Tokyo 1088215 Japan
(72)**Name of Inventor :**
1)SUZUKI Kenichi
2)KURA Kenji
3)KAWAUCHI Naoto
4)SASANO Yuichi
5)MATSUMURA Akihiko
6)OISHI Hiroshi

(57) Abstract :
Disclosed is a shape measurement device for a machine tool workpiece that is capable of measuring in a short period of time in comparison to cases using a high precision sensor exclusively and is capable of measuring a prescribed spot with high precision which is equipped with a wide range sensor (11) that is capable of measuring across a wide range a first workpiece model generator (13) that generates an approximate 3D shape of the workpiece (1) on the basis of data measured by the sensor (11) a high precision sensor (12) that is capable of high precision measurement a second workpiece model generator (14) that generates a high precision 3D shape of the workpiece (1) on the basis of the data measured by the sensor (12) and a workpiece model integrator (15) that generates an entire 3D shape of the workpiece (1) by replacing on the basis of the approximate 3D shape of the workpiece (1) and the high precision 3D shape of the workpiece (1) spots on said approximate 3D shape of the workpiece (1) that match the high precision 3D shape of the workpiece (1) with the said high precision 3D shape of the workpiece (1).

No. of Pages : 32 No. of Claims : 3

(12) PATENT APPLICATION PUBLICATION
(19) INDIA
(22) Date of filing of Application :29/08/2012
(21) Application No.2071/MUMNP/2012 A
(43) Publication Date : 31/01/2014

(54) Title of the invention : METHOD OF DETERMINING SPEED AND COORDINATES OF VEHICLES WITH SUBSEQUENT IDENTIFICATION THEREOF AND AUTOMATIC RECORDING OF TRAFFIC OFFENCES AND DEVICE FOR REALISING SAID METHOD

(51) International classification :G08G1/054
(31) Priority Document No :NA
(32) Priority Date :NA
(33) Name of priority country :NA
(86) International Application No :PCT/RU2010/000048
Filing Date :08/02/2010
(87) International Publication No :WO/2011/096840
(61) Patent of Addition to Application Number :NA
Filing Date :NA
(62) Divisional to Application Number :NA
Filing Date :NA

(71)**Name of Applicant :**
1)OBSCHESTVO S OGRANICHENNOY OTVETSTVENNOSTIYU SISTEMY PEREDOVYKH TEKHNOLOGIY
Address of Applicant :per. Motalnvy 8 Nizhny Novgorod 603140 Russia
(72)**Name of Inventor :**
1)OSIPOV Sergey Konstantinovich
2)MALINKIN Aleksey Yurievich

(57) Abstract :
The invention relates to traffic control systems and more precisely to methods and devices for monitoring the observance of road traffic regulations including the observance of speed limits. The proposed automatic system makes it possible to reduce the probability of error when identifying the vehicle of an offender increases the length of a speed limit monitoring zone to several hundreds/thousands of metres and makes it possible to cut expenditure on the construction and maintenance of gantries for the installation of speed limit monitoring devices. For this purpose a novel method for the combined processing of signals from a radar and a panoramic video camera is proposed in which data flows from the video camera and the radar are independently obtained after which they are compared and data about the speed and coordinates are obtained with little probability of error in identifying the vehicle of an offender. The device for realizing the proposed method comprises a radar with a signal processing module, which makes it possible to calculate the speed and distance of all vihicles on a chosen section of road, and a panoramic video camera.

No. of Pages : 23 No. of Claims : 5

(12) PATENT APPLICATION PUBLICATION
(19) INDIA
(22) Date of filing of Application :17/08/2012
(21) Application No.1994/MUMNP/2012 A
(43) Publication Date : 31/01/2014

(54) Title of the invention : DENTAL ROOT CANAL TREATMENT INSTRUMENT AND MANUFACTURING METHOD THEREOF

(51) International classification	:A61C 5/02,A61C 5/04
(31) Priority Document No	:2010-041907
(32) Priority Date	:26/02/2010
(33) Name of priority country	:Japan
(86) International Application No	:PCT/JP2011/054259
Filing Date	:25/02/2011
(87) International Publication No	:WO/2011/105542
(61) Patent of Addition to Application Number	:NA
Filing Date	:NA
(62) Divisional to Application Number	:NA
Filing Date	:NA

(71)**Name of Applicant :**
1)MANI Inc.
Address of Applicant :8-3 Kiyohara Industrial Park Utsunomiya-shi Tochigi 3213231 Japan.
(72)**Name of Inventor :**
1)KATOH Kazuaki

(57) Abstract :
Manufacturing a working portion and a joined portion through the same processing method provides a dental root canal treatment instrument allowing a simplified manufacturing process. A metal, rod-like main frame 11 includes a working portion 11a having a tapered point to be inserted in a root canal during use, and a joined portion 11b buried within a handle 12, continuing to the end on the wide side of the working portion. The working portion and the joined portion are formed through the same processing method. Injection of a synthetic resin to cover the joined portion 11b prepares the handle 12, thereby forming a dental root canal treatment instrument 10. The joined portion has at least one concave portion or convex portion in order to reinforce the joint with the handle.

No. of Pages : 16 No. of Claims : 7

(12) PATENT APPLICATION PUBLICATION
(19) INDIA
(22) Date of filing of Application :20/08/2012
(21) Application No.1996/MUMNP/2012 A
(43) Publication Date : 31/01/2014

(54) Title of the invention : MEDICAL STAPLER AND MAGAZINE

(51) International classification :A61B 17/068
(31) Priority Document No :2010-042541
(32) Priority Date :26/02/2010
(33) Name of priority country :Japan
(86) International Application No :PCT/JP2011/054260
Filing Date :25/02/2011
(87) International Publication No :WO/2011/105543
(61) Patent of Addition to Application Number :NA
Filing Date :NA
(62) Divisional to Application Number :NA
Filing Date :NA

(71)**Name of Applicant :**
1)MANI Inc.
Address of Applicant :8-3 Kiyohara Industrial Park Utsunomiya-shi Tochigi 3213231 Japan.
(72)**Name of Inventor :**
1)MATSUTANI Kanji
2)KAMEI Toshiharu

(57) Abstract :
There is provided a magazine capable of preventing jamming of staples in a medical stapler, and reducing manufacturing cost. Width of a space for receiving staples 3 of a magazine 40 is greater than length of the staples 3 and is less than the value resulting from adding length of the staples 3 to1/2 of the diameter of the staples, preferably 1/3 thereof or less. In addition to the above configuration, the magazine 40 is formed as half split bodies 41 and 42 on either side of a rail along the length thereof, a convex positioning part 41a is provided on one of the half split bodies, a concavity 42a for engaging with the positioning convexity is formed on the other half split body, support holes 41c and 42c for engaging with positioning parts are formed in the half split bodies, a locking part 41b for holding engagement with the other half split body is provided on said one of the half split bodies, and a to-be-locked part 42b for engaging with the locking part is formed on the other half split body.

No. of Pages : 22 No. of Claims : 5

(12) PATENT APPLICATION PUBLICATION
(19) INDIA
(22) Date of filing of Application :27/08/2012
(21) Application No.2076/MUMNP/2012 A
(43) Publication Date : 31/01/2014

(54) Title of the invention : PLANE TRACTOR

(51) International classification :B64F1/22
(31) Priority Document No :1051078
(32) Priority Date :16/02/2010
(33) Name of priority country :France
(86) International Application No :PCT/IB2011/050626
Filing Date :15/02/2011
(87) International Publication No :WO/2011/101782
(61) Patent of Addition to Application Number :NA
Filing Date :NA
(62) Divisional to Application Number :NA
Filing Date :NA

(71)**Name of Applicant :**
1)ISRAEL AEROSPACE INDUSTRIES LTD.
Address of Applicant :Ben-Gurion International Airport Lod 70100 Israel.
(72)**Name of Inventor :**
1)DECOUX Laurent
2)ENAULT Eric
3)VERMALLE Nicolas

(57) Abstract :
The invention relates to a plane tractor (1) which grips the nose gear of a plane, including: a chassis (5); wheel modules (3) connected to the chassis, each wheel module including at least one actuator for inducing a vertical movement of the module in relation to the chassis; a gripping platform (2) for gripping the nose gear of a plane (4), the platform together with the chassis having freedom of movement substantially in circular translation; and a damping and actuating means connecting the platform and the chassis.

No. of Pages : 35 No. of Claims : 28

(12) PATENT APPLICATION PUBLICATION
(19) INDIA
(22) Date of filing of Application :11/09/2012
(21) Application No.2152/MUMNP/2012 A
(43) Publication Date : 31/01/2014

(54) Title of the invention : A VEHICLE WITH A FOUR BAR LINK SUSPENSION SYSTEM PROVIDED WITH IMPROVED ROLL CHARACTERISTICS

(51) International classification :B60P1/00
(31) Priority Document No :NA
(32) Priority Date :NA
(33) Name of priority country :NA
(86) International Application No :PCT/US2010/024093
Filing Date :12/02/2010
(87) International Publication No :WO 2011/099981
(61) Patent of Addition to Application Number :NA
Filing Date :NA
(62) Divisional to Application Number :NA
Filing Date :NA

(71)**Name of Applicant :**
1)VOLVO GROUP NORTH AMERICA LLC
Address of Applicant :7900 National Service Road Greensboro NC 27409 U.S.A.
(72)**Name of Inventor :**
1)KISELIS Gregory Paul
2)BROWN Michael Alwyn

(57) Abstract :
The present invention relates to a vehicle and a method for improving the roll characteristics of a vehicle. The vehicle includes an axle a sprung mass a first control arm a second control arm a third control arm a first pivotable joint a second pivotable joint a third pivotable joint and a fourth pivotable joint. The torsional stiffness of the first control arm the second control arm the first pivotable joint the second pivotable joint the third pivotable joint and the fourth pivotable joint are substantially equal to or greater than the torsional stiffness of the axle whereby the axle bends and twists during a sprung mass roll event in order to limit an amount of roll.

No. of Pages : 63 No. of Claims : 20

(12) PATENT APPLICATION PUBLICATION
(19) INDIA
(22) Date of filing of Application :09/08/2012
(21) Application No.1938/MUMNP/2012 A
(43) Publication Date : 31/01/2014

(54) Title of the invention : ROTARY ENDODONTIC FILE WITH FRICTIONAL GRIP

(51) International classification :A61C5/02
(31) Priority Document No :204195
(32) Priority Date :25/02/2010
(33) Name of priority country :Israel
(86) International Application No :PCT/IL2011/000179
Filing Date :22/02/2011
(87) International Publication No :WO 2011/104705
(61) Patent of Addition to Application Number :NA
Filing Date :NA
(62) Divisional to Application Number :NA
Filing Date :NA

(71)**Name of Applicant :**
1)MEDIC NRG LTD.
Address of Applicant :Kibbutz Afikim 15148 Israel
(72)**Name of Inventor :**
1)BECKER Arik
2)LEVY Haim
3)ROTHENSTEIN Simon

(57) Abstract :
An endodontic file (10) comprising at least a central longitudinal cord (12) a helically wound wire (14) at least partially surrounding the cord and an elastomeric grip (16) partially covering the helically wound wire near a first end thereof and having an outer diameter that is slightly wider than an internal diameter of a barrel of a dental instrument whereby on insertion into the barrel it is supported therein only by friction.

No. of Pages : 23 No. of Claims : 15

(12) PATENT APPLICATION PUBLICATION
(19) INDIA
(22) Date of filing of Application :21/08/2012
(21) Application No.2015/MUMNP/2012 A
(43) Publication Date : 31/01/2014

(54) Title of the invention : BISTABLE MAGNETIC ACTUATOR

(51) International classification	:H01F 7/122,H01F7/14
(31) Priority Document No	:10 2010 017 874.8
(32) Priority Date	:21/04/2010
(33) Name of priority country	:Germany
(86) International Application No	:PCT/DE2011/000371
Filing Date	:06/04/2011
(87) International Publication No	:WO/2011/131167
(61) Patent of Addition to Application Number	:NA
Filing Date	:NA
(62) Divisional to Application Number	:NA
Filing Date	:NA

(71)**Name of Applicant :**
1)JOHNSON ELECTRIC DRESDEN GMBH
Address of Applicant :Wilhelm-Liebknecht-Strasse 6 01257 Dresden Germany
(72)**Name of Inventor :**
1)GASSMANN Jrg
2)SCHNITTER Steffen
3)HERRMANN Marcus

(57) Abstract :
In a bistable magnetic actuator with a polarized magnetic circuit with parallel operating air gaps wherein between the outer legs of a U-shaped soft-iron yoke a flat permanent magnet is integrated that carries a soft-iron centre leg and applies a permanent-magnetically created magnetic flux to a rocking arma-ture supported on the centre leg wherein at each outer leg a separately con-trollable excitation winding provides swiveling pulses for the rocking armature to swivel from one permanent-magnetically self-holding swivel position into the other the permanent-magnetically created magnetic flux through the magnetic circuit closed over the rocking armature in each case for an electromagnetic magnetic flux created by the excitation winding of said magnetic circuit in a di-rection opposed to the permanent-magnetically created magnetic flux commu-tates into the other parallel magnetic circuit with the electromagnetically not excited excitation winding swiveling over the rocking armature.

No. of Pages : 17 No. of Claims : 7

(12) PATENT APPLICATION PUBLICATION
(19) INDIA
(22) Date of filing of Application :17/09/2012
(21) Application No.2183/MUMNP/2012 A
(43) Publication Date : 31/01/2014

(54) Title of the invention : MANUFACTURE METHOD OF HIGH EFFICIENCY NON ORIENTED SILICON STEEL HAVING GOOD MAGNETIC PERFORMANCE

(51) International classification :C21D8/12,C22C38/60
(31) Priority Document No :201010518012.5
(32) Priority Date :25/10/2010
(33) Name of priority country :China
(86) International Application No :PCT/CN2011/073373
Filing Date :27/04/2011
(87) International Publication No :WO 2012/055224
(61) Patent of Addition to Application Number :NA
Filing Date :NA
(62) Divisional to Application Number :NA
Filing Date :NA

(71)**Name of Applicant :**
1)BAOSHAN IRON & STEEL CO. LTD.
Address of Applicant :No.885 Fujin Road Baoshan District Shanghai 201900 China
(72)**Name of Inventor :**
1)MA Aihua
2)WANG Bo
3)XIE Shishu
4)HU Zhanyuan
5)ZOU Liang
6)WANG Zitao
7)ZHU Yuhua
8)HUANG Jie
9)JIN Bingzhong
10)LIU Xiandong

(57) Abstract :
Manufacture method of high efficiency non oriented silicon steel having good magnetic performance is disclosed. The method comprises the following steps: 1) smelting and casting wherein the non oriented silicon steel having the components (in wt%) as follows: C =0.0040% Si 0.1 0.8% Al 0.002 1.0% Mn 0.10 1.50% P = 0.2% Sb 0.04 0.08% S = 0.0030% N =0.0020% Ti =0.0020% balance Fe and inevitable impurities is subjected to smelting and casting to form casting blank; 2) hot rolling wherein blank heating temperature is 1100 1150 and final rolling temperature is 860 920 air cooling after hot rolling with cooling time of (2+30—Sb%)s=t=7s coiling at condition of =720; 3) acid cleaning and cold rolling wherein the reduction rate is 70 78%; 4) annealing at a temperature of 800 1000 with heating speed of =15/s and keeping for 10s 25s. High efficiency electric steel is manufactured in low cost by adding element beneficial for texture controlling the content of deteriorating elements during steel smelting controlling the time of air cooling for hot rolling and accompanying high temperature coiling with assuring magnetic performance.

No. of Pages : 17 No. of Claims : 2

(12) PATENT APPLICATION PUBLICATION
(19) INDIA
(22) Date of filing of Application :17/09/2012
(21) Application No.2185/MUMNP/2012 A
(43) Publication Date : 31/01/2014

(54) Title of the invention : METHOD FOR PRODUCING RECOMBINANT THROMBIN

(51) International classification :C12N9/74,C07K1/113
(31) Priority Document No :10160740.6
(32) Priority Date :22/04/2010
(33) Name of priority country :EPO
(86) International Application No :PCT/EP2011/056359
Filing Date :20/04/2011
(87) International Publication No :WO 2011/131736
(61) Patent of Addition to Application Number :NA
Filing Date :NA
(62) Divisional to Application Number :NA
Filing Date :NA

(71)**Name of Applicant :**
1)SCIL PROTEINS GMBH
Address of Applicant :Heinrich Damerow Strasse 1 06120 Halle/Saale Germany
(72)**Name of Inventor :**
1)ANTON Andreas
2)DIETRICH Arndt
3)KOETTER Jochen
4)SCHAEFFNER Joerg

(57) Abstract :
The invention relates to a method for producing folded prethrombin wherein inclusion bodies which contain unfolded prethrombin or a derivative thereof are solubilized in a solubilization buffer containing at least one chaotropic compound and at least one organic disulfide compound. The invention further relates to methods for producing thrombin and a thrombin and derivatives thereof. The invention also relates to solutions that contain folded proteins which can be produced by the methods according to the invention.

No. of Pages : 26 No. of Claims : 13

(12) PATENT APPLICATION PUBLICATION
(19) INDIA
(22) Date of filing of Application :09/08/2012
(21) Application No.1942/MUMNP/2012 A
(43) Publication Date : 31/01/2014

(54) Title of the invention : METHOD AND APPARATUS FOR ENCODING VIDEO AND METHOD AND APPARATUS FOR DECODING VIDEO BY CONSIDERING SKIP AND SPLIT ORDER

(51) International classification :H04N 7/24
(31) Priority Document No :10-2010-0003555
(32) Priority Date :14/01/2010
(33) Name of priority country :Republic of Korea
(86) International Application No :PCT/KR2011/000239
Filing Date :13/01/2011
(87) International Publication No :WO/2011/087292
(61) Patent of Addition to Application Number :NA
Filing Date :NA
(62) Divisional to Application Number :NA
Filing Date :NA

(71)**Name of Applicant :**
1)SAMSUNG ELECTRONICS CO. LTD.
Address of Applicant :129 Samsung-ro Yeongtong-gu Suwon-si Gyeonggi-do 443-742 Republic of Korea
(72)**Name of Inventor :**
1)KIM Il-Koo
2)MIN Jung-Hye
3)JUNG Hae-Kyung
4)LEE Sun-Il
5)CHEON Min-Su

(57) Abstract :
A method of encoding a video includes: determining coding units having a tree structure including coding units of coded depths and determining encoding modes for the coding units of the coded depths by performing encoding based on coding units according to depths, the coding units according to depths obtained by hierarchically splitting the maximum coding unit as a depth deepens; and outputting information indicating an order of split information and skip mode information which is selectively determined for the coding units according to depths, and information about the encoding modes for the coding units of the coded depths including the split information and the skip mode information which are arranged according to the order.

No. of Pages : 59 No. of Claims : 15

(12) PATENT APPLICATION PUBLICATION
(19) INDIA
(22) Date of filing of Application :22/08/2012
(21) Application No.2020/MUMNP/2012 A
(43) Publication Date : 31/01/2014

(54) Title of the invention : A PISTON POSITIONED FOR RECIPROCAL MOVEMENT IN A COMBUSTION ENGINE CYLINDER

(51) International classification :F02B23/06
(31) Priority Document No :1000163.4
(32) Priority Date :18/02/2010
(33) Name of priority country :Sweden
(86) International Application No :PCT/EP2011/000779
Filing Date :18/02/2011
(87) International Publication No :WO 2011/101154
(61) Patent of Addition to Application Number :NA
Filing Date :NA
(62) Divisional to Application Number :NA
Filing Date :NA

(71)**Name of Applicant :**
1)VOLVO TECHNOLOGY CORPORATION
Address of Applicant :S 405 08 Gteborg Sweden
(72)**Name of Inventor :**
1)EISMARK Jan
2)BALTHASAR Michael

(57) Abstract :
A piston (3) arranged for reciprocal movement in a combustion engine cylinder (2) and where half way between flame plume impingement areas in a plane perpendicular to said reciprocal movement are arranged protrusions (70) or ridge protruding into the combustion chamber having a smooth form adapted for preserving kinetic energy in a flame plume and where said ridge comprising a left side flank (80) a top section (81) and a right side flank (82) and where a transition section (83) between each of said side flanks and the top section comprising a deflection edge (71) in order to minimize flow losses.

No. of Pages : 22 No. of Claims : 8

(12) PATENT APPLICATION PUBLICATION
(19) INDIA
(22) Date of filing of Application :17/09/2012
(21) Application No.2191/MUMNP/2012 A
(43) Publication Date : 31/01/2014

(54) Title of the invention : METHOD OF TREATING HAIR

(51) International classification :A61K8/81,A61Q5/06
(31) Priority Document No :PCT/CN2010/071157
(32) Priority Date :19/03/2010
(33) Name of priority country :China
(86) International Application No :PCT/EP2011/052733
Filing Date :24/02/2011
(87) International Publication No :WO 2011/113675
(61) Patent of Addition to Application Number :NA
Filing Date :NA
(62) Divisional to Application Number :NA
Filing Date :NA

(71)**Name of Applicant :**
1)HINDUSTAN UNILEVER LIMITED
Address of Applicant :Unilever House B.D. Sawant Marg Chakala Andheri East Mumbai 400 099 Maharashtra India
(72)**Name of Inventor :**
1)BATCHELOR Stephen Norman
2)BIRD Jayne Michelle
3)CHEN Wei
4)TAO Qingsheng
5)WANG Jinfang

(57) Abstract :
A method for colouring hair comprising the step of applying to the hair a composition comprising a dye polymer in which the dye polymer is obtainable by the reaction of a NH group directly and covalently bound to an aromatic ring of a dye i) with a reactive group of a monomeric compound ii) in which the reactive group is selected from the group consisting of isocyanate; oxazolone; ester and epoxide followed by polymerising the resulting dye monomer to form a dye polymer iii).

No. of Pages : 16 No. of Claims : 13

(12) PATENT APPLICATION PUBLICATION
(19) INDIA
(22) Date of filing of Application :17/09/2012
(21) Application No.2192/MUMNP/2012 A
(43) Publication Date : 31/01/2014

(54) Title of the invention : METHOD OF TREATING HAIR

(51) International classification	:A61K8/91, A61Q5/06
(31) Priority Document No	:PCT/CN2010/071157
(32) Priority Date	:19/03/2010
(33) Name of priority country	:China
(86) International Application No	:PCT/EP2011/052735
Filing Date	:24/02/2011
(87) International Publication No	:WO 2011/113676
(61) Patent of Addition to Application Number	:NA
Filing Date	:NA
(62) Divisional to Application Number	:NA
Filing Date	:NA

(71)**Name of Applicant :**
1)HINDUSTAN UNILEVER LIMITED
Address of Applicant :Unilever House B.D. Sawant Marg Chakala Andheri East Mumbai 400 099 Maharashtra India
(72)**Name of Inventor :**
1)BATCHELOR Stephen Norman
2)BIRD Jayne Michelle
3)MENG Sheng
4)TAO Qingsheng
5)WANG Jinfang

(57) Abstract :
A method for colouring hair comprising the step of applying to the hair a composition comprising a dye polymer in which the dye polymer is obtainable by the reaction of a NH group directly and covalently bound to an aromatic ring of a dye i) with a reactive group of a polymeric compound ii) in which the reactive group is selected from the group consisting of isocyanate; oxazolone; epoxide; ester and anhydride.

No. of Pages : 18 No. of Claims : 13

(12) PATENT APPLICATION PUBLICATION
(19) INDIA
(22) Date of filing of Application :17/09/2012
(21) Application No.2193/MUMNP/2012 A
(43) Publication Date : 31/01/2014

(54) Title of the invention : COMPOSITION

(51) International classification :A61K8/81,A61K8/91,A61Q5/06
(31) Priority Document No :PCT/CN2010/071157
(32) Priority Date :19/03/2010
(33) Name of priority country :China
(86) International Application No :PCT/EP2011/052737
Filing Date :24/02/2011
(87) International Publication No:WO 2011/113677
(61) Patent of Addition to Application Number :NA
Filing Date :NA
(62) Divisional to Application Number :NA
Filing Date :NA

(71)**Name of Applicant :**
1)HINDUSTAN UNILEVER LIMITED
Address of Applicant :Unilever House B.D. Sawant Marg Chakala Andheri East Mumbai 400 099 Maharashtra India
(72)**Name of Inventor :**
1)BATCHELOR Stephen Norman
2)BIRD Jayne Michelle
3)CHEN Wei
4)DAS Julie Rosalyn
5)TAO Qingsheng
6)WANG Jinfang

(57) Abstract :
Hair composition and method for dying hair using a composition comprising a polymer dye said polymer dye obtainable by polymerizing: (a) a first dye monomer which has a structure according to Formula (I) where Y is selected from CONH or CHCH(OH)CH NH and R is selected from H alkyl; aryl; benzyl; halogen; ester; acid amide; and CN and (b) a second monomer according to a structure according to Formula (II) where X is an organic bridging group covalently connecting the amine to the alkene moiety of the monomer preferably X is CO(CH) where n = 1 to 6; where R is selected from: H alkyl; aryl; benzyl; halogen; ester; acid amide; and CN preferably R is CH or H; and where R R and R are independently selected from H or alkyl preferably at least two of R R and R are alkyl.

No. of Pages : 19 No. of Claims : 11

(12) PATENT APPLICATION PUBLICATION
(19) INDIA
(22) Date of filing of Application :21/05/2012
(21) Application No.1535/MUM/2012 A
(43) Publication Date : 31/01/2014

(54) Title of the invention : PURGING CONTROL VALVE FOR AIR DRYING SYSTEM

(51) International classification :B60T17/00
(31) Priority Document No :NA
(32) Priority Date :NA
(33) Name of priority country :NA
(86) International Application No :NA
Filing Date :NA
(87) International Publication No :N/A
(61) Patent of Addition to Application Number :NA
Filing Date :NA
(62) Divisional to Application Number :NA
Filing Date :NA

(71)**Name of Applicant :**
1)KNORR-BREMSE SYSTEMS FOR COMMERCIALS VEHICLES INDIA PVT. LTD
Address of Applicant :SURVEY NOS. 280 & 281, VILLAGE MANN, HINJAWADI, PHASE II, TALUKA MULSHI, PUNE-411057 Maharashtra India
(72)**Name of Inventor :**
1)MAHESH SHAHAPURE
2)ABHISHEK JADHAV
3)DEEPAK MUMBARE
4)JAYDEEP GANGURDE
5)RASHMI ARADHAYE

(57) Abstract :
The present invention provides an air drying system. The system comprises a compressor, an air dryer unit having an air inlet, an air outlet, a switching device and an air drying device with desiccators, a valve, an aperture configured thereupon, an air reservoir, and a purge valve configured externally to the air dryer unit through a pipe assembly . The air drying system effectively and easily controls purging of water without requiring an additional purge tank.

No. of Pages : 17 No. of Claims : 3

(12) PATENT APPLICATION PUBLICATION
(19) INDIA
(22) Date of filing of Application :28/08/2012
(21) Application No.2061/MUMNP/2012 A
(43) Publication Date : 31/01/2014

(54) Title of the invention : ASSOCIATIVE ACRYLIC EMULSION CONTAINING A MONOMER BASED ON OXO ALCOHOL PRODUCTION METHOD THEREOF AND METHOD FOR THICKENING AN AQUEOUS FORMULATION PRODUCED FROM SAID EMULSION

(51) International classification :C08F2/22,C08L33/02,C08L33/06
(31) Priority Document No :10 51368
(32) Priority Date :26/02/2010
(33) Name of priority country :France
(86) International Application No :PCT/IB2011/000328
Filing Date :17/02/2011
(87) International Publication No :WO 2011/104600
(61) Patent of Addition to Application Number :NA
Filing Date :NA
(62) Divisional to Application Number :NA
Filing Date :NA

(71)**Name of Applicant :**
1)COATEX S.A.S.
Address of Applicant :35 rue Amp¨re Z.I. Lyon Nord 69730 Genay France
(72)**Name of Inventor :**
1)SUAU Jean Marc
2)RUHLMANN Denis

(57) Abstract :
The present invention relates to particular HASE type rheology modifiers namely: aqueous emulsions having a solid content of up to approximately 25% based on acrylic thickeners including an associative monomer functionalized by a hydrophobic group based on oxo alcohols. The invention also relates to the synthesis method thereof and to a method for thickening an aqueous formulation containing same.

No. of Pages : 27 No. of Claims : 13

(12) PATENT APPLICATION PUBLICATION
(19) INDIA
(22) Date of filing of Application :24/09/2012
(21) Application No.2238/MUMNP/2012 A
(43) Publication Date : 31/01/2014

(54) Title of the invention : TRANSFER STATION FOR PLANT MATERIAL SAMPLING AND TRACKING SYSTEM

(51) International classification :A01H5/00
(31) Priority Document No :NA
(32) Priority Date :NA
(33) Name of priority country :NA
(86) International Application No :PCT/US2010/025620
Filing Date :26/02/2010
(87) International Publication No :WO 2011/106019
(61) Patent of Addition to Application Number :NA
Filing Date :NA
(62) Divisional to Application Number :NA
Filing Date :NA

(71)**Name of Applicant :**
1)SYNGENTA PARTICIPATIONS AG
Address of Applicant :Schwarzwaldalle 215 CH 4058 Basel Switzerland
(72)**Name of Inventor :**
1)LAFFERTY William Michael
2)BEAVER Scott Wayne
3)TWEEDY Charles Wilson
4)GEORGE Elizabeth Ann
5)FRANDSEN Walter James Jr.
6)BARGHINI Anthony David
7)KLINE Daniel Steven
8)SWAMER Shane Scott

(57) Abstract :
Systems and methods for processing plant material samples and a transfer station designed for use in such systems and methods. In one embodiment the system includes a controller a plant material sampling device and a transfer station. The plant material sampling device is configured to communicate with the controller and to read an identifier of a plant. The sampling device also has a removable magazine and is designed to take at least one plant sample from multiple plants place such samples in the magazine and track the identity of the plant from which each sample is taken. The transfer station is configured to hold at multiple positions multiple magazines and multiple trays such that the positions of the magazines are mirrored by the positions of the trays read an identifier of each magazine read an identifier of each tray map storage locations for each one of the magazines to storage locations of one of the trays and sequentially unload plant samples from the magazines to the trays.

No. of Pages : 44 No. of Claims : 15

(12) PATENT APPLICATION PUBLICATION
(19) INDIA
(22) Date of filing of Application :24/09/2012
(21) Application No.2239/MUMNP/2012 A
(43) Publication Date : 31/01/2014

(54) Title of the invention : A METHOD AND APPARATUS FOR WIRELESS COMMUNICATION

(51) International classification :H04B7/26, H04B7/02, H04B7/10
(31) Priority Document No :60/730,631
(32) Priority Date :26/10/2005
(33) Name of priority country :U.S.A.
(86) International Application No :PCT/US2006/060262
Filing Date :26/10/2006
(87) International Publication No :WO/2007/051140
(61) Patent of Addition to Application Number :NA
Filing Date :NA
(62) Divisional to Application Number :555/MUMNP/2008
Filed on :24/03/2008

(71)**Name of Applicant :**
1)QUALCOMM INCORPORATED
Address of Applicant :Attn: International IP Administration 5775 Morehouse Drive San Diego California 92121-1714 United States of America
(72)**Name of Inventor :**
1)GUPTA Rajarshi
2)SAMPATH Ashwin
3)JULIAN David Jonathan
4)HORN Gavin
5)STAMOULIS Anastasios
6)JAIN Nikhil
7)LI Husheng
8)PRAKASH Rajat

(57) Abstract :
Systems and methods are disclosed that facilitate wireless communication using resource utilization messages (RUMs), in accordance with various aspects. A RUM may be generated for a first node, such as an access point or an access terminal, to indicate that a first predetermined threshold has been met or exceeded. The RUM may be weighted to indicate a degree to which a second predetermined threshold has been exceeded. The first and/or second predetermined thresholds may be associated with various parameters associated with the node, such as latency, throughput, data rate, spectral efficiency, carrier-to-interference ratio, interference-over-thermal level, etc. The RUM may then be transmitted to one or more other nodes to indicate a level of disadvantage experienced by the first node.

No. of Pages : 63 No. of Claims : 39

(12) PATENT APPLICATION PUBLICATION
(19) INDIA
(22) Date of filing of Application :25/05/2012
(21) Application No.1578/MUM/2012 A
(43) Publication Date : 31/01/2014

(54) Title of the invention : LIFE SUPPORTING EVACUATION CAPSULE (LSEC)

(51) International classification :A62B 99/00
(31) Priority Document No :NA
(32) Priority Date :NA
(33) Name of priority country :NA
(86) International Application No :NA
Filing Date :NA
(87) International Publication No : NA
(61) Patent of Addition to Application Number :NA
Filing Date :NA
(62) Divisional to Application Number :NA
Filing Date :NA

(71)**Name of Applicant :**
1)HIMANSHU PATIL
Address of Applicant :A6/603, LOKDHARA KANCHANGANGA CHS, KALYAN (EAST), THANE Maharashtra India
2)LAXMIKANT YERAGI
(72)**Name of Inventor :**
1)HIMANSHU PATIL
2)LAXMIKANT YERAGI

(57) Abstract :
Natural and Artificial disasters are dangerous and fatal and most of the peoples are helpless during this situation therefore we developed a Life Supporting Evacuation Capsule (LSEC) which can give the guarantee of safety in earthquakes, floods, Tsunami, industrial accidents, fires, Tornados, Hurricanes and Landslides etc. This cube box (LSEB-Life Saving Evacuation.. Box) is useful in high fire and earthquake inside the house. This box is then fitted inside egg or conical shaped capsule which is made up of cast iron which remain erect in any condition. This is called as Life Supporting Evacuation Capsule (LSEC) Material Used for LSEC :- 1. Timber Wood - Compressive strength. 2. Magnesium oxide fireproof board - Protection from Fire. 3. Fireproof cushion - Protection from Shocks and Fire 4. Cast iron metal plates - Protection from falling material. . 5. Metal egg capsule - Free floating in Water. 6. Shock absorber spring - Protection from Shocks. 7. Iron metal rod - Emergency stretcher making. Advantages 1. LSEC have Facility to adjust itself to float on the water in any condition. 2. GPS Signal indication from box for detection after disaster. 3. Protection against overload and debris of cement. 4. Fully reliable system for life protection in natural and artificial disasters. 5. It will protect person for 3 to 4 days or more in adverse climatic conditions. 6. Relatively easy to make in reasonable cost according to demand.

No. of Pages : 11 No. of Claims : 2

(12) PATENT APPLICATION PUBLICATION
(19) INDIA
(22) Date of filing of Application :30/07/2012
(21) Application No.2174/MUM/2012 A
(43) Publication Date : 31/01/2014

(54) Title of the invention : CATALYTIC OLIGOMERIZATION OF OCTENES

(51) International classification	:C07C2/02, C07C2/04, C07C5/23
(31) Priority Document No	:NA
(32) Priority Date	:NA
(33) Name of priority country	:NA
(86) International Application No	:NA
Filing Date	:NA
(87) International Publication No	:N/A
(61) Patent of Addition to Application Number	:NA
Filing Date	:NA
(62) Divisional to Application Number	:NA
Filing Date	:NA

(71)**Name of Applicant :**
1)RELIANCE INDUSTRIES LIMITED
Address of Applicant :RELIANCE INDUSTRIES LTD., 3RD FLOOR,MAKER CHAMBER-IV, 222,NARIMAN POINT MUMBAI-400021, Maharashtra India
(72)**Name of Inventor :**
1)GHOSH RAJSHEKHAR
2)BANDYOPADHYAY ASHIS RANJAN
3)JASRA RAKSHVIR

(57) Abstract :
In accordance with the present disclosure there is provided a process for preparing a hydrogenated olefin polymer by hydrogenation of a polyoctene; said polyoctene being prepared by reacting a C8-olefm feed comprising an isomeric mixture of an alpha-olefin and a non-alpha olefin monomer in a controlled manner with the help of an ionic catalyst, while controlling at least one condition of the reaction selected from the group of condition consisting of exotherm, contact time of the olefin feed with ionic catalyst and molar ratio of the ionic catalyst to the olefin feed within predetermined ranges to obtain an oligomerized mixture comprising at least one polyoctene and unreacted ionic catalyst.

No. of Pages : 44 No. of Claims : 28

(12) PATENT APPLICATION PUBLICATION
(19) INDIA
(22) Date of filing of Application :25/09/2012
(21) Application No.2266/MUMNP/2012 A
(43) Publication Date : 31/01/2014

(54) Title of the invention : METHOD FOR PRODUCING ENGINE VALVE IN WHICH SODIUM METAL IS SEALED

(51) International classification :F01L3/14,F01L3/24
(31) Priority Document No :2010109882
(32) Priority Date :12/05/2010
(33) Name of priority country :Japan
(86) International Application No :PCT/JP2011/060503
Filing Date :02/05/2011
(87) International Publication No :WO 2011/142287
(61) Patent of Addition to Application Number :NA
Filing Date :NA
(62) Divisional to Application Number :NA
Filing Date :NA

(71)**Name of Applicant :**
1)MITSUBISHI HEAVY INDUSTRIES LTD.
Address of Applicant :16 5 Konan 2 chome Minato ku Tokyo 1088215 Japan
2)YOSHIMURA COMPANY
(72)**Name of Inventor :**
1)MARUYAMA Kazutaka
2)MORII Hirokazu
3)YOSHIMURA Hyoji

(57) Abstract :
Provided is a method for producing an engine valve (V) by subjecting a stem part (S) having a hollow part (H) to a drawing treatment using a series of dies (D1 D2 Dx Dx+1 Dn) such that the outer diameter and inner diameter of the stem part (S) become smaller in steps and the stem part (S) is thereby molded to the desired size whereby after the stem part (S) has been subjected to the drawing treatment until the inner diameter of the hollow part (H) of the stem part (S) has reached a specific size (steps S11 to S15) sodium metal (Na) in the form of a solid block is introduced to the hollow part (H) of the stem part (S) (step 16 1) and a protective agent(P) made from solid paraffin or naphthalene is also introduced to the hollow part (H) of the stem part (S) such as to form a barrier between the sodium metal (Na) and the atmosphere (step S16 2) after which the stem part (S) is further subjected to a cold drawing treatment (steps S17 S18).

No. of Pages : 15 No. of Claims : 3

(12) PATENT APPLICATION PUBLICATION
(19) INDIA
(22) Date of filing of Application :09/08/2012
(21) Application No.1940/MUMNP/2012 A
(43) Publication Date : 31/01/2014

(54) Title of the invention : METHOD FOR MILLING LONG FIBER REINFORCED COMPOSITE PLASTICS

(51) International classification :B23C3/00,B29C70/54
(31) Priority Document No :10 2010 004 570.5
(32) Priority Date :12/01/2010
(33) Name of priority country :Germany
(86) International Application No :PCT/EP2011/000042
Filing Date :07/01/2011
(87) International Publication No :WO 2011/085949
(61) Patent of Addition to Application Number :NA
Filing Date :NA
(62) Divisional to Application Number :NA
Filing Date :NA

(71)**Name of Applicant :**
1)TUTECH INNOVATION GMBH
Address of Applicant :Harburger Schlossstr. 6 12 21079 Hamburg Germany
2)TECHNISCHE UNIVERSIT„ET HAMBURG HARBURG
(72)**Name of Inventor :**
1)HINTZE Wolfgang
2)HARTMANN Dirk
3)SCHTTE Christoph

(57) Abstract :
The invention relates to a method for milling long fiber reinforced composite plastics having at least one unidirectional top layer using a rotating milling tool wherein the work piece and tool are moved in an advancing movement parallel to the work piece cutting face relative to each other wherein there is an edge fiber separation angle on the tool of 0° = = 90° and the blade of the tool mills the component edge in synchronization.

No. of Pages : 19 No. of Claims : 7

(12) PATENT APPLICATION PUBLICATION
(19) INDIA
(22) Date of filing of Application :21/08/2012
(21) Application No.2016/MUMNP/2012 A
(43) Publication Date : 31/01/2014

(54) Title of the invention : GENES ENCODING PROTEINS ABLE TO ENHANCE HEAT RESISTANCE OF PLANTS AND MICROORGANISMS AND USES THEREOF

(51) International classification	:C12N 15/29,C12N15/57
(31) Priority Document No	:201010300890.X
(32) Priority Date	:28/01/2010
(33) Name of priority country	:China
(86) International Application No	:PCT/CN2011/070745
Filing Date	:28/01/2011
(87) International Publication No	:WO/2011/091764
(61) Patent of Addition to Application Number	:NA
Filing Date	:NA
(62) Divisional to Application Number	:NA
Filing Date	:NA

(71)**Name of Applicant :**
1)SICHUAN BIODESIGN GENE ENGINEERING CO. LTD.
Address of Applicant :Room 5-18 Yulin Business Harbor No.47 Yongfeng Road Hi-Tech Industrial Development Zone Chengdu Sichuan 610000 P.R.China
(72)**Name of Inventor :**
1)YANG Yi

(57) Abstract :
Genes encoding proteins able to enhance heat resistance of plants and microorganisms proteins encoded by the same and uses thereof are provided wherein the genes contain nucleotide sequences encoding the following peptide fragments: N-CRICQE X7-45 PCAC X6 AHR X1 CVQ X13-27-C wherein X represents any amino acid and the subscript represents the number of amino acid.

No. of Pages : 97 No. of Claims : 56

(12) PATENT APPLICATION PUBLICATION
(19) INDIA
(22) Date of filing of Application :17/09/2012

(21) Application No.2190/MUMNP/2012 A
(43) Publication Date : 31/01/2014

(54) Title of the invention : COMPOSITION

(51) International classification :A61K8/84,A61K8/91,A61Q5/06
(31) Priority Document No :PCT/CN2010/071156
(32) Priority Date :19/03/2010
(33) Name of priority country :China
(86) International Application No :PCT/EP2011/052841
Filing Date :25/02/2011
(87) International Publication No:WO 2011/113680
(61) Patent of Addition to Application Number :NA
Filing Date :NA
(62) Divisional to Application Number :NA
Filing Date :NA

(71)**Name of Applicant :**
1)HINDUSTAN UNILEVER LIMITED
Address of Applicant :Unilever House B.D. Sawant Marg Chakala Andheri East Mumbai 400 099 Maharashtra India
(72)**Name of Inventor :**
1)BATCHELOR Stephen Norman
2)MENG Sheng
3)MURRAY Andrew Malcolm
4)TAO Qingsheng
5)WANG Jinfang

(57) Abstract :
Hair composition comprising a polymer dye said polymer dye comprising a positively charged polymer and a negatively charged reactive dye and a method for dying hair by applying to the hair a composition comprising a polymer dye said polymer dye comprising a positively charged polymer and a negatively charged reactive dye.

No. of Pages : 13 No. of Claims : 9

(12) PATENT APPLICATION PUBLICATION
(19) INDIA
(22) Date of filing of Application :08/08/2012
(21) Application No.2277/MUM/2012 A
(43) Publication Date : 31/01/2014

(54) Title of the invention : SPEAKER DEVICE

(51) International classification	:H04R9/02, H04R1/02
(31) Priority Document No	:2011180875
(32) Priority Date	:22/08/2011
(33) Name of priority country	:Japan
(86) International Application No	:NA
Filing Date	:NA
(87) International Publication No	: NA
(61) Patent of Addition to Application Number	:NA
Filing Date	:NA
(62) Divisional to Application Number	:NA
Filing Date	:NA

(71)**Name of Applicant :**
1)SONY CORPORATION
Address of Applicant :1-7-1 Konan Minato-ku Tokyo Japan
(72)**Name of Inventor :**
1)TAKAHISA TAGAMI
2)EMIKO IKEDA
3)KEISUKE NAKASHITA

(57) Abstract :
A speaker device including a magnet formed in a ring shape; a yoke having a center pole portion inserted in the center of the magnet; a plate formed in a ring shape and arranged on the outer circumferential surface of the center pole portion of the yoke while being attached to the magnet; a coil bobbin formed in a cylindrical shape and movable in the axial direction of the center pole portion while being partially fitted on the center pole portion of the yoke;.....

No. of Pages : 84 No. of Claims : 20

(12) PATENT APPLICATION PUBLICATION
(19) INDIA
(22) Date of filing of Application :26/09/2012
(21) Application No.2277/MUMNP/2012 A
(43) Publication Date : 31/01/2014

(54) Title of the invention : METHOD FOR MANUFACTURING A POROUS SYNTHETIC DIAMOND MATERIAL

(51) International classification	:C23C16/27,C23C 16/02
(31) Priority Document No	:1052613
(32) Priority Date	:07/04/2010
(33) Name of priority country	:France
(86) International Application No	:PCT/EP2011/055263
Filing Date	:05/04/2011
(87) International Publication No	:WO/2011/124568
(61) Patent of Addition to Application Number	:NA
Filing Date	:NA
(62) Divisional to Application Number	:NA
Filing Date	:NA

(71)**Name of Applicant :**
1)Commissariat lnergie atomique et aux nergies alternatives
Address of Applicant :25 rue Leblanc Btiment Le Ponant D F 75015 Paris FRANCE.
(72)**Name of Inventor :**
1)SCORSONE Emmanuel
2)GIRARD Hugues

(57) Abstract :
The invention relates to a method for manufacturing a diamond layer having a porous three-dimensional structure, the method being of the type which includes growing the diamond layer from a sacrificial material and gradually decomposing said sacrificial material during growth of the diamond layer, said method including the following steps: 1) provision of a substrate capable of supporting the plasma-enhanced chemical vapour deposition growth of the diamond layer on at least one of the surfaces of the substrate, the substrate comprising, on said at least one surface thereof, a layer made of a sacrificial material having a porous three-dimensional structure capable of gradually decomposing upon contact with said plasma, the layer of sacrificial material containing diamond grains of nanometric size; and 2) growth by plasma-enhanced chemical vapour deposition of the diamond layer from diamond grains and concomitant and gradual decomposition of the sacrificial material upon contact with said plasma.

No. of Pages : 26 No. of Claims : 8

(12) PATENT APPLICATION PUBLICATION
(19) INDIA
(22) Date of filing of Application :17/09/2012
(21) Application No.2186/MUMNP/2012 A
(43) Publication Date : 31/01/2014

(54) Title of the invention : CLINICAL DATA RECONCILIATION AS PART OF A REPORT GENERATION SOLUTION

(51) International classification :G06Q50/00,G06F17/40
(31) Priority Document No :61/308760
(32) Priority Date :26/02/2010
(33) Name of priority country :U.S.A.
(86) International Application No :PCT/US2011/026488
Filing Date :28/02/2011
(87) International Publication No :WO 2011/106776
(61) Patent of Addition to Application Number :NA
Filing Date :NA
(62) Divisional to Application Number :NA
Filing Date :NA

(71)**Name of Applicant :**
1)MMODAL IP LLC
Address of Applicant :9009 Carothers Parkway Ste. C 2 Franklin TN 37067 U.S.A.
(72)**Name of Inventor :**
1)KOLL Detlef
2)FRITSCH Juergen

(57) Abstract :
An automated system updates electronic medical records (EMRs) based on dictated reports without requiring manual data entry into on screen forms. A dictated report is transcribed by an automatic speech recognizer and facts are extracted from the report and stored in encoded form. Information from a patient s report is also stored in encoded form. The resulting encoded information from the report and EMR are reconciled with each other and changes to be made to the EMR are identified based on the reconciliation. The identified changes are made to the EMR automatially without requiring manual data entry into the EMR.

No. of Pages : 38 No. of Claims : 32

(12) PATENT APPLICATION PUBLICATION
(19) INDIA
(22) Date of filing of Application :27/09/2012
(21) Application No.2280/MUMNP/2012 A
(43) Publication Date : 31/01/2014

(54) Title of the invention : EASILY DOSABLE SOLID PREPARATION

(51) International classification :A61K47/32,A61K9/30,A61K47/02
(31) Priority Document No :2010082759
(32) Priority Date :31/03/2010
(33) Name of priority country :Japan
(86) International Application No :PCT/JP2011/058133
Filing Date :30/03/2011
(87) International Publication No :WO/2011/125798
(61) Patent of Addition to Application Number :NA
Filing Date :NA
(62) Divisional to Application Number :NA
Filing Date :NA

(71)**Name of Applicant :**
1)MOCHIDA PHARMACEUTICAL CO. LTD.
Address of Applicant :7 Yotsuya 1 chome Shinjuku ku Tokyo 1608515 Japan
(72)**Name of Inventor :**
1)KUDOU Yumio
2)WARABINO Kuniomi

(57) Abstract :
The object is to provide a preparation for oral administration having improved dosability and/or a coating composition to be used in an easily dosable preparation the coating composition not affecting elution properties. The object can be achieved by using a coating composition comprising a first thickener selected from the group consisting of a carboxyvinyl polymer and sodium alginate a polyvalent metal compound and a second thickener comprising at least one member selected from the group consisting of xanthan gum guar gum and sodium alginate (provided that when the first thickener is sodium alginate the second thickener is not sodium alginate) or a coating composition which comprises hydroxypropylmethylcellulose as a thickener and contains a sugar or sugar alcohol having a solubility at 20C of 30 or greater.

No. of Pages : 70 No. of Claims : 23

(12) PATENT APPLICATION PUBLICATION
(19) INDIA
(22) Date of filing of Application :27/09/2012
(21) Application No.2281/MUMNP/2012 A
(43) Publication Date : 31/01/2014

(54) Title of the invention : MACHINE TOOL

(51) International classification :B23Q1/00,B23Q3/06,B23Q1/48
(31) Priority Document No :10 2010 009 947.3
(32) Priority Date :02/03/2010
(33) Name of priority country :Germany
(86) International Application No:PCT/EP2011/000990
Filing Date :01/03/2011
(87) International Publication No :WO 2011/107252
(61) Patent of Addition to Application Number :NA
Filing Date :NA
(62) Divisional to Application Number :NA
Filing Date :NA

(71)**Name of Applicant :**
1)GROB WERKE GMBH & CO. KG
Address of Applicant :Industriestrasse 4 87719 Mindelheim Germany
(72)**Name of Inventor :**
1)GROB Burkhart
2)H–BEL Alfred

(57) Abstract :
The invention relates to a machine tool for machining one or more workpieces wherein the workpiece is held in the machine tool indirectly or directly by means of a chucking device on or at a workpiece table that cannot be rotated or in particular can be rotated about at least one axis. The invention is characterised in that the chucking device comprises at least one chucking element which interacts with the workpiece indirectly or directly. An electric motor which is operatively connected to the chucking element is provided for generating the chucking force.

No. of Pages : 65 No. of Claims : 22

(12) PATENT APPLICATION PUBLICATION
(19) INDIA
(22) Date of filing of Application :27/09/2012
(21) Application No.2283/MUMNP/2012 A
(43) Publication Date : 31/01/2014

(54) Title of the invention : PISTON COMPRESSOR

(51) International classification :F04B 27/08
(31) Priority Document No :NA
(32) Priority Date :NA
(33) Name of priority country :NA
(86) International Application No :PCT/JP2010/002388
Filing Date :31/03/2010
(87) International Publication No :WO 2011/121669
(61) Patent of Addition to Application Number :NA
Filing Date :NA
(62) Divisional to Application Number :NA
Filing Date :NA

(71)**Name of Applicant :**
1)Valeo Japan Co. Ltd.
Address of Applicant :39 Aza Higashihara Sendai Kumagaya shi Saitama 3600193 Japan
(72)**Name of Inventor :**
1)TAKAHASHI Tomoyasu
2)TERAYA Takanori

(57) Abstract :
Provided is a piston compressor wherein a centrifugal separation operation can be effectively performed by the rotation of a shaft to effectively reduce the leakage of oil to the outside of a compressor as well as to promote the cooling of inner components contained in a crank chamber. The piston compressor has a first intake path through which working fluid introduced from an intake port (30) is directly introduced to intake chambers (27a 27b) without passing through a crank chamber (7) and a second intake path through which working fluid introduced from the intake port (30) is introduced to the intake chambers (27a 27b) via the crank chamber (7). The second intake path is comprised of an oil separation passage (32) introduced from the crank chamber (7) to the intake chambers (27a 27b) via holes formed in the shaft and a bypass passage (33) introduced from the crank chamber (7) to the intake chambers (27a 27b) through cylinder blocks (1 2) without passing through the shaft (12).

No. of Pages : 27 No. of Claims : 5

(12) PATENT APPLICATION PUBLICATION
(19) INDIA
(22) Date of filing of Application :24/07/2012
(21) Application No.2116/MUM/2012 A
(43) Publication Date : 31/01/2014

(54) Title of the invention : A METHOD FOR REMOVING CHLORIDES FROM HYDROCARBON STREAM BY STEAM STRIPPING

(51) International classification	:C10G19/00, C10L3/10, C07B63/00, C10L3/0
(31) Priority Document No	:NA
(32) Priority Date	:NA
(33) Name of priority country	:NA
(86) International Application No	:NA
Filing Date	:NA
(87) International Publication No	:N/A
(61) Patent of Addition to Application Number	:NA
Filing Date	:NA
(62) Divisional to Application Number	:NA
Filing Date	:NA

(71)**Name of Applicant :**
1)RELIANCE INDUSTRIES LIMITED
Address of Applicant :RELIANCE INDUSTRIES LTD., 3RD FLOOR, MAKER CHAMBER-IV 222,NARIAMAN POINT, MUMBAI-400021, Maharashtra India
(72)**Name of Inventor :**
1)MARVE MAHESH G
2)PAREKH AMITKUMAR A.
3)DAS ASIT KUMAR
4)RAJESHWAR D
5)RANA D.P.S.
6)BISHT HARENDER
7)HITESH K.SAHU
8)SINGH JAY KUMAR
9)KALYAN NATH
10)YADAV MANOJ
11)NERIVETLA SAMPATH
12)MANDAL SUKUMAR

(57) Abstract :
A method for removing chloride impurities from a heavy hydrocarbon stream is disclosed. The heavy hydrocarbon stream is contacted with a stripping medium at a temperature ranging between 100 - 450 C and at a pressure ranging between 0.1 - 2 bar with ratio of the heavy hydrocarbon stream to the stripping medium ranging between 1 - 30; wherein the temperature is maintained below the initial boiling point of the hydrocarbon stream.

No. of Pages : 25 No. of Claims : 14

(12) PATENT APPLICATION PUBLICATION
(19) INDIA
(22) Date of filing of Application :29/09/2012
(21) Application No.2301/MUMNP/2012 A
(43) Publication Date : 31/01/2014

(54) Title of the invention : HIGH TENSILE STRENGTH HOT ROLLED STEEL SHEET HAVING EXCELLENT FORMABILITY AND METHOD FOR MANUFACTURING THE SAME

(51) International classification	:C22C38/00, C22C38/14
(31) Priority Document No	:2010-082425
(32) Priority Date	:31/03/2010
(33) Name of priority country	:Japan
(86) International Application No	:PCT/JP2011/001931
Filing Date	:30/03/2011
(87) International Publication No	:WO/2011/122031
(61) Patent of Addition to Application Number	:NA
Filing Date	:NA
(62) Divisional to Application Number	:NA
Filing Date	:NA

(71)**Name of Applicant :**
1)JFE STEEL CORPORATION
Address of Applicant :2-3 Uchisaiwai-cho 2-chome Chiyoda-ku Tokyo 1000011 Japan.
(72)**Name of Inventor :**
1)ARIGA Tamako
2)NAKAJIMA Katsumi
3)MEGA Tetsuya

(57) Abstract :
An object of the present invention is to provide a high tensile strength hot rolled steel sheet having sufficiently high strength and excellent formability (elongation and stretch-flange ability), as well as a method for manufacturing the hot rolled steel sheet. Specifically, the present invention provides a high tensile strength hot rolled steel sheet having tensile strength of at least 980 MPa and excellent formability, comprising: a composition including by mass %, C: 0.07% to 0.13% (inclusive of 0.07% and 0.13%), Si: 0.3% or less, Mn: 0.5% to 2.0% (inclusive of 0.5% and 2.0%), P: 0.025% or less, S: 0.005% or less, N: 0.0060% or less, Al: 0.06% or less, Ti: 0.08% to 0.14% (inclusive of 0.08% and 0.14%), V: 0.15% to 0.30% (inclusive of 0.15% and 0.30%), Solute V: 0.04% to 0.1% (inclusive of 0.04% and 0.1%), Solute Ti: 0.05% or less, and remainder consisting of Fe and incidental impurities; (ii) microstructure with fine carbides dispersion precipitated therein, the fine carbides containing Ti and V and having the average particle diameter of less than 10 nm, as well as volume ratio with respect to the entire microstructure of at least 0.007; and matrix as ferrite phase having area ratio with respect to the entire microstructure of at least 97%, wherein contents of C, Ti, V, S and N satisfy formula (1) and formula (2) below. Ti>0.08 + (N/14x48 + S/32x48) ... (1) 0.8<(Ti/48 + V/51)/(C/12)<1.2 ...(2) In formulae (1) and (2), C□, Ti□, V□, S□ and N□ represent contents (mass %) of corresponding elements, respectively. Bending properties of the hot rolled steel sheet is further improves by setting the total content of the solute V and the solute Ti to be at least 0.07 mass %.

No. of Pages : 37 No. of Claims : 8

(12) PATENT APPLICATION PUBLICATION
(19) INDIA
(22) Date of filing of Application :29/09/2012
(21) Application No.2302/MUMNP/2012 A
(43) Publication Date : 31/01/2014

(54) Title of the invention : METHOD FOR MANUFACTURING HOT DIP GALVANIZED STEEL SHEET

(51) International classification	:C23C22/40, B32B15/08
(31) Priority Document No	:2010-080878
(32) Priority Date	:31/03/2010
(33) Name of priority country	:Japan
(86) International Application No	:PCT/JP2011/001481
Filing Date	:14/03/2011
(87) International Publication No	:WO/2011/121910
(61) Patent of Addition to Application Number	:NA
Filing Date	:NA
(62) Divisional to Application Number	:NA
Filing Date	:NA

(71)**Name of Applicant :**
1)JFE STEEL CORPORATION
Address of Applicant :2-3 Uchisaiwai-cho 2-chome Chiyoda-ku Tokyo 1000011 Japan.
(72)**Name of Inventor :**
1)HOSHINO Katsuya
2)KUBOTA Takahiro
3)TADA Masahiko
4)NAGOSHI Masayasu
5)TANIMOTO Wataru
6)KIJIMA Hideo
7)HIGAI Kazuhiko

(57) Abstract :
An object of the present invention is to make it possible, without necessitating an alkali pretreatment, to form a zinc oxide layer having excellent sliding properties on a hot dip galvanized steel sheet not subjected to alloying after galvanizing and thus having a relatively low degree of surface activity. Another object of the present invention is to make it possible to manufacture a hot dip galvanized steel sheet having higher area ratio of Zn oxide layer formed on a coating surface and larger thickness of the Zn oxide layer. Specifically, the present invention provides a method for manufacturing a hot dip galvanized steel sheet comprising: subjecting a steel sheet to hot dip galvanizing and subsequent temper rolling; bringing the steel sheet into contact with acidic solution having pH buffering capacity; retaining the steel sheet for 1 second to 60 seconds after the contact with the acidic solution; and rinsing the steel sheet with water, to form a zinc oxide layer on a coating surface of the steel sheet, characterized in that the method further comprising: carrying out the temper rolling by either rolling the steel sheet first with a dull roll having Ra > 2.0mm at rolling reduction rate < 5% and then with a bright roll having Ra < 0.1mm at rolling reduction rate < 3% or rolling the steel sheet first with a bright roll having Ra < 0.1 mm at rolling reduction rate < 3% and then with a dull roll having Ra > 2.0mm at rolling reduction rate < 5%.

No. of Pages : 28 No. of Claims : 4

(12) PATENT APPLICATION PUBLICATION
(19) INDIA
(22) Date of filing of Application :11/08/2012
(21) Application No.1948/MUMNP/2012 A
(43) Publication Date : 31/01/2014

(54) Title of the invention : THIOXANTHONE-BASED AUTOPHAGY INHIBITOR THERAPIES TO TREAT CANCER

(51) International classification :A61K31/00,A61K31/138
(31) Priority Document No :61/311,736
(32) Priority Date :08/03/2010
(33) Name of priority country :U.S.A.
(86) International Application No :PCT/US2011/027606
Filing Date :08/03/2011
(87) International Publication No :WO/2011/112623
(61) Patent of Addition to Application Number :NA
Filing Date :NA
(62) Divisional to Application Number :NA
Filing Date :NA

(71)**Name of Applicant :**
1)SPECTRUM PHARMACEUTICALS INC.
Address of Applicant :157 Technology Drive Irvine CA 92618 United States of America
(72)**Name of Inventor :**
1)NAWROCKI Steffan T.
2)CAREW Jennifer S
3)REDDY Guru

(57) Abstract :
The present specification provides compositions comprising a thioxanthone-based autophagy inhibitor and/or a cancer therapeutic autophagy inducing compound pharmaceutical kits comprising these compositions and methods of treating cancer using such compounds compositions and kits. Additionally the present specification provides methods of treating cancer using a thioxanthone-based autophagy inhibitor and a radiotherapy.

No. of Pages : 58 No. of Claims : 25

(12) PATENT APPLICATION PUBLICATION
(19) INDIA
(22) Date of filing of Application :24/08/2012
(21) Application No.2039/MUMNP/2012 A
(43) Publication Date : 31/01/2014

(54) Title of the invention : ENGINE

(51) International classification :F01B13/06,F01L5/06
(31) Priority Document No :1001276.3
(32) Priority Date :27/01/2010
(33) Name of priority country :U.K.
(86) International Application No :PCT/GB2011/050132
Filing Date :27/01/2011
(87) International Publication No :WO 2011/092501
(61) Patent of Addition to Application Number :NA
Filing Date :NA
(62) Divisional to Application Number :NA
Filing Date :NA

(71)**Name of Applicant :**
1)TWO STROKE DEVELOPMENTS LIMTIED
Address of Applicant :BIRCHMOOR, THE COMMON, STANMORE, HA7 3HQ, UNITED KINGDOM
(72)**Name of Inventor :**
1)ELLIS Paul Fredric

(57) Abstract :
An internal combustion engine comprises a movable piston (2) at least one inlet port (21a 21b) for a working fluid at least one transfer/scavenging port (14) for a working fluid internally to a working space and at least one exhaust port (16) from the working space in which the said at least one transfer/scavenging port (14) is provided with closure means including a reciprocatable sleeve (1) which is parallel to the axis of and linked synchronously with the piston movement.

No. of Pages : 23 No. of Claims : 10

(12) PATENT APPLICATION PUBLICATION
(19) INDIA
(22) Date of filing of Application :29/09/2012
(21) Application No.2303/MUMNP/2012 A
(43) Publication Date : 31/01/2014

(54) Title of the invention : FOLDABLE STRUCTURES FOR A CONSTRUCTION

(51) International classification :E04H 1/00
(31) Priority Document No :61/324,836
(32) Priority Date :16/04/2010
(33) Name of priority country :U.S.A.
(86) International Application No :PCT/IB2011/000836
Filing Date :15/04/2011
(87) International Publication No :WO/2011/128769
(61) Patent of Addition to Application Number :NA
Filing Date :NA
(62) Divisional to Application Number :NA
Filing Date :NA

(71)**Name of Applicant :**
1)GRAF FERNANDEZ Rodrigo
Address of Applicant :Bosque de Ciruelos No. 227 Colonia Bosques de las Lomas 11700 Mexico D.F. MEXICO.
(72)**Name of Inventor :**
1)GRAF FERNANDEZ Rodrigo

(57) Abstract :
A roof, ceiling, dome, bridge, tunnel or similar structure for a construction, a system and method thereof, the structure configured to move between a folded position and an extended position, the structure comprising a folding structure unit with a first end and a second end, the first end being co-lineal with the second end when the structure is in an extended position, a first coupling and folding device between the first end and the second end, an actuating device connected from the first end to the second end, a first rod between the first end and the first coupling and folding device and a second rod between the second end and the first coupling and folding device, and wherein the actuating device and the coupling and folding device are configured to move the transportable and foldable structure from a folded position to an extended position and from an extended position to a folded position. A plurality of structures may be co-lineally connected between themselves. A plurality of structures may be connected in a parallel manner between themselves. A plurality of structures may be perpendicularly connected between themselves. Connection devices are also disclosed.

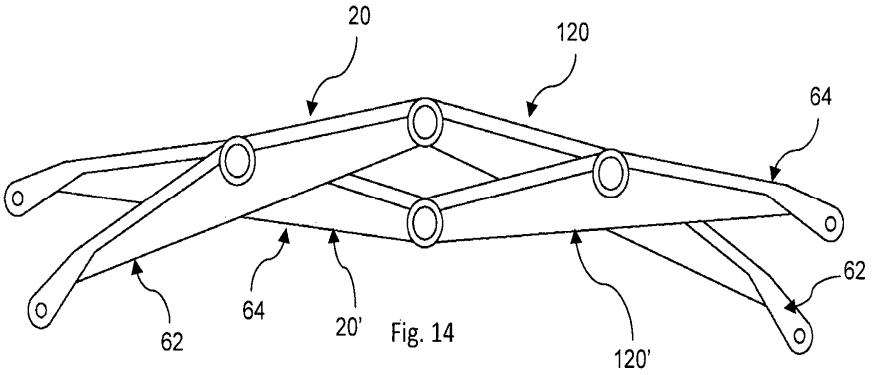

Fig. 14

No. of Pages : 73 No. of Claims : 15

(12) PATENT APPLICATION PUBLICATION
(19) INDIA
(22) Date of filing of Application :29/09/2012
(21) Application No.2304/MUMNP/2012 A
(43) Publication Date : 31/01/2014

(54) Title of the invention : VITROCERAMIC GLASS COMPOSITIONS FOR GASKETS OF APPARATUSES OPERATING AT HIGH TEMPERATURES AND ASSEMBLING METHOD USING SAID COMPOSITIONS

(51) International classification	:C03C10/00,C03C 29/00
(31) Priority Document No	:1052467
(32) Priority Date	:01/04/2010
(33) Name of priority country	:France
(86) International Application No	:PCT/EP2011/055057
Filing Date	:31/03/2011
(87) International Publication No	:WO/2011/121095
(61) Patent of Addition to Application Number	:NA
Filing Date	:NA
(62) Divisional to Application Number	:NA
Filing Date	:NA

(71)**Name of Applicant :**
1)Commissariat l™nergie atomique et aux nergies alternatives
Address of Applicant :25 rue Leblanc Btiment Le Ponant D 75015 Paris FRANCE.
(72)**Name of Inventor :**
1)NONNET Hl¨ne
2)CONNELLY Andrew
3)KHEDIM Hichem

(57) Abstract :
A vitroceramic glass composition consisting of SiO2, Al2O3, and CaO or of SiO2, Al2O3, CaO and SrO or of SiO2, Al2O3 and La2O3. Method and assembly of at least two parts using said composition. Gasket and assembly obtained by this method. High temperature electrolyzer (HTE) or solid oxide fuel cell (SOFC) comprising this gasket or this assembly.

No. of Pages : 95 No. of Claims : 21

(12) PATENT APPLICATION PUBLICATION
(19) INDIA
(22) Date of filing of Application :29/09/2012
(21) Application No.2305/MUMNP/2012 A
(43) Publication Date : 31/01/2014

(54) Title of the invention : A DEVICE FOR CONTROLLING A PLURALITY OF CURRENT-BREAKER DEVICES VIA ELECTRIC MOTORS

(51) International classification	:H01H 33/36,H01H51/00
(31) Priority Document No	:10 54161
(32) Priority Date	:28/05/2010
(33) Name of priority country	:France
(86) International Application No	:PCT/EP2011/058662
Filing Date	:26/05/2011
(87) International Publication No	:WO/2011/147928
(61) Patent of Addition to Application Number	:NA
Filing Date	:NA
(62) Divisional to Application Number	:NA
Filing Date	:NA

(71)**Name of Applicant :**
1)ALSTOM TECHNOLOGY LTD
Address of Applicant :Brown Boveri Strasse 7 CH-5400 Baden Switzerland.
(72)**Name of Inventor :**
1)JUGE Patrice
2)GRANELLI Guillaume
3)RAYON Jean-Luc

(57) Abstract :
This is a device for controlling a group of current-breaker devices (21, 22) via a respective motor (M1, M2) for each current-breaker device for operating at least one electrical contact of the current-breaker device. It includes a single changeover contactor (11) drived by driving means (12), intended to be connected to a power supply (V) of the motors and to be connected to the motors via means (R1, R2) for directing a current from the power supply (V) passing in transit through the changeover contactor (11). One application is controlling current-breaker devices of a bay of a high-voltage electrical substation.

No. of Pages : 31 No. of Claims : 12

(12) PATENT APPLICATION PUBLICATION
(19) INDIA
(22) Date of filing of Application :29/09/2012
(21) Application No.2306/MUMNP/2012 A
(43) Publication Date : 31/01/2014

(54) Title of the invention : SPRING STEEL AND METHOD FOR MANUFACTURING THE SAME

(51) International classification	:C22C38/24, C22C38/32
(31) Priority Document No	:2010-076315
(32) Priority Date	:29/03/2010
(33) Name of priority country	:Japan
(86) International Application No	:PCT/JP2011/001156
Filing Date	:28/02/2011
(87) International Publication No	:WO/2011/121887
(61) Patent of Addition to Application Number	:NA
Filing Date	:NA
(62) Divisional to Application Number	:NA
Filing Date	:NA

(71)**Name of Applicant :**
1)JFE STEEL CORPORATION
Address of Applicant :2-3 Uchisaiwai-cho 2-chome Chiyoda-ku Tokyo 1000011 Japan.
(72)**Name of Inventor :**
1)HONJO Minoru
2)HASE Kazukuni
3)KIMURA Hideto

(57) Abstract :
Disclosed is high strength spring steel that can limit the depth of pitting occurring when corroded and therefore possesses high strength as well as excellent pitting corrosion resistance and corrosion fatigue property, with a composition containing: C: greater than 0.35 mass % and less than 0.50 mass %; Si: greater than 1.75 mass % and less than or equal to 3.00 mass %; Mn: 0.2 mass % to 1.0 mass %; Cr: 0.01 mass % to 0.04 mass %; P: 0.025 mass % or less; S: 0.025 mass % or less; Mo: 0.1 mass % to 1.0 mass %; and O: 0.0015 mass % or less, under a condition that a PC value calculated by PC = 4.2—([C]+[Mn])+0.1—(1/[Si]+1/[Mo])+20.3—[Cr]+0.001—(1/[N]) is greater than 3.3 and equal to or less than 8.0. Also disclosed is a preferred method for manufacturing the same.

No. of Pages : 44 No. of Claims : 12

(12) PATENT APPLICATION PUBLICATION
(19) INDIA
(22) Date of filing of Application :29/09/2012
(21) Application No.2307/MUMNP/2012 A
(43) Publication Date : 31/01/2014

(54) Title of the invention : HIGH TENSILE STRENGTH GALVANIZED STEEL SHEET HAVING EXCELLENT FORMABILITY AND METHOD FOR MANUFACTURING THE SAME

(51) International classification	:C23C2/02, B32B15/01
(31) Priority Document No	:2010-082448
(32) Priority Date	:31/03/2010
(33) Name of priority country	:Japan
(86) International Application No	:PCT/JP2011/001930
Filing Date	:30/03/2011
(87) International Publication No	:WO/2011/122030
(61) Patent of Addition to Application Number	:NA
Filing Date	:NA
(62) Divisional to Application Number	:NA
Filing Date	:NA

(71)**Name of Applicant :**
1)JFE STEEL CORPORATION
Address of Applicant :2-3 Uchisaiwai-cho 2-chome Chiyoda-ku Tokyo 1000011 Japan.
(72)**Name of Inventor :**
1)ARIGA Tamako
2)NAKAJIMA Katsumi
3)FUNAKAWA Yoshimasa

(57) Abstract :
An object of the present invention is to provide a high tensile strength galvanized steel sheet having sufficiently high strength and excellent formability (elongation and stretch-flange ability), as well as a method for manufacturing the galvanized steel sheet. Specifically, the present invention provides a high tensile strength galvanized steel sheet having tensile strength of at least 980 MPa and excellent formability, comprising: a hot rolled steel sheet having (i) a composition including by mass %, C: 0.07% to 0.13% (inclusive of 0.07% and 0.13%), Si: 0.3% or less, Mn: 0.5% to 2.0% (inclusive of 0.5% and 2.0%), P: 0.025% or less, S: 0.005% or less, N: 0.0060% or less, Al: 0.06% or less, Ti: 0.10% to 0.14% (inclusive of 0.10% and 0.14%), V: 0.15% to 0.30% (inclusive of 0.15% and 0.30%), Solute V: 0.04% to 0.1% (inclusive of 0.04% and 0.1%), Solute Ti: 0.05% or less, and remainder as Fe and incidental impurities, (ii) microstructure with fine carbides dispersion precipitated therein, the fine carbides containing Ti and V and having the average particle diameter of less than 10 nm, as well as volume ratio with respect to the entire microstructure of at least 0.007, and (iii) matrix as ferrite phase having area ratio with respect to the entire microstructure of at least 97%; and hot-dip galvanized coating or galvannealed coating formed on a surface of the hot rolled steel sheet, wherein contents of C, Ti, V, S and N satisfy formula (1) Ti ³ 0.10 + (N/14 48 + S/32 48) and formula (2) 0.8 £ (Ti/48 + V/51)/(C/12) £ 1.2.

No. of Pages : 44 No. of Claims : 8

(12) PATENT APPLICATION PUBLICATION
(19) INDIA
(22) Date of filing of Application :02/11/2012
(21) Application No.2510/MUMNP/2012 A
(43) Publication Date : 31/01/2014

(54) Title of the invention : METHOD FOR PRODUCING ACYLOXYPYRANONE COMPOUND METHOD FOR PRODUCING ALKYNE COMPOUND AND METHOD FOR PRODUCING DIHYDROFURAN COMPOUND

(51) International classification	:C12P17/06,C07B53/00,C07D307/33
(31) Priority Document No	:2010088819
(32) Priority Date	:07/04/2010
(33) Name of priority country	:Japan
(86) International Application No	:PCT/JP2011/058835
Filing Date	:07/04/2011
(87) International Publication No	:WO 2011/126082
(61) Patent of Addition to Application Number	:NA
Filing Date	:NA
(62) Divisional to Application Number	:NA
Filing Date	:NA

(71)**Name of Applicant :**
1)NISSAN CHEMICAL INDUSTRIES LTD.
Address of Applicant :7 1 Kanda Nishiki cho 3 chome Chiyoda ku Tokyo 1010054 Japan
(72)**Name of Inventor :**
1)OOTSUKA Yoshikazu
2)AKEBOSHI Tomohiro
3)YAMAZAKI Akiko
4)IRIYAMA Yusuke

(57) Abstract :
An acyloxypyranone compound represented by formula (II) (wherein R represents an acyl group) is produced by causing an acylating agent and a hydrolase to act on hydroxypyranone represented by formula (I) in a hydrous organic solvent; an alkyne compound represented by formula (IV) is produced by causing an acetylene organic metal compound represented by formula (III) (wherein R represents a hydrogen atom or a trisubstituted silyl group and M represents an alkali metal atom aluminum or magnesium monohalide) and a coordinating additive to act on an acyloxypyranone compound represented by formula (II); and a dihydrofuran compound represented by formula (V) is produced by acid hydrolyzing an alkyne compound represented by formula (IV).

No. of Pages : 37 No. of Claims : 9

(12) PATENT APPLICATION PUBLICATION
(19) INDIA
(22) Date of filing of Application :06/11/2012
(21) Application No.2521/MUMNP/2012 A
(43) Publication Date : 31/01/2014

(54) Title of the invention : LOUVER MODULE AND LOUVER SYSTEM EMPLOYING SAME

(51) International classification	:F24F13/14, E06B7/02,
(31) Priority Document No	:10-2010-0059265
(32) Priority Date	:22/06/2010
(33) Name of priority country	:Republic of Korea
(86) International Application No	:PCT/KR2011/001928
Filing Date	:21/03/2011
(87) International Publication No	: WO/2011/162469
(61) Patent of Addition to Application Number	:NA
Filing Date	:NA
(62) Divisional to Application Number	:NA
Filing Date	:NA

(71)**Name of Applicant :**
1)BAUTEK CO. LTD.
Address of Applicant :114-108 Deogu-ri Paltan-myeon Hwaseong-si Gyeonggi-do 445-918 Republic of Korea.
(72)**Name of Inventor :**
1)BAEK Kee Han

(57) Abstract :
There are provided a louver module which has an improved ventilation control structure, operating method, material, and shape for imparting heat-resistance and water-tight properties and prevents a louver from deviating through mutual fixation and reinforcement among a plurality of materials, and a louver system employing the same. The louver module of includes a frame, an opening/closing mechanism, a louver unit and power transmission mechanism. The frame has vertical and horizontal frames made of a synthetic resin, which are assembled into a rectangular shape. The opening/closing mechanism is assembled with one of the vertical frames so as to provide torque using worm gears. The louver unit is made of a synthetic resin material and includes a plurality of louvers each having a compartment forming an air layer for heat resistance therein. In the louver unit, symmetrically-shaped brackets are respectively coupled to both ends in the length direction of the respective louvers, a reinforcing beam extended in the length direction is assembled inside each louver, at least one surface of outer surfaces of each louver has a streamline shape, and the plurality of louvers are rotatably mounted between the vertical frames constituting left and right sides of the frame while being horizontally spaced apart in vertical direction from one another. The power transmission mechanism includes a plurality of holders respectively disposed at positions corresponding to end portions of the louvers inside the vertical frames constituting the frame and a pair of shafts disposed inside each vertical frame.

No. of Pages : 50 No. of Claims : 13

(12) PATENT APPLICATION PUBLICATION
(19) INDIA
(22) Date of filing of Application :06/11/2012

(21) Application No.2522/MUMNP/2012 A
(43) Publication Date : 31/01/2014

(54) Title of the invention : COMPOUNDS

(51) International classification	:A61K31/553, A61K31/538
(31) Priority Document No	:1008209.7
(32) Priority Date	:17/05/2010
(33) Name of priority country	:U.K.
(86) International Application No	:PCT/EP2011/057902
Filing Date	:16/05/2011
(87) International Publication No	:WO/2011/144578
(61) Patent of Addition to Application Number	:NA
Filing Date	:NA
(62) Divisional to Application Number	:NA
Filing Date	:NA

(71)**Name of Applicant :**
1)BTG INTERNATIONAL LIMITED
Address of Applicant :5 Fleet Place London EC4M 7RD United Kingdom
(72)**Name of Inventor :**
1)HORWELL David Christopher
2)SCOPES David Ian Carter

(57) Abstract :
A compound of formula (I) or a pharmaceutically acceptable salt or prodrug thereof wherein X is N or CH; Q is NR6 or O; A1 and A2 are independently hydrogen or C1-6 alkyl or may together form a carbonyl group; R1 and R2 are independently hydrogen, halogen, CF3, CN, OR7, OR8, NR8R9, NR8COR10, NR8S02R10, S02NR8R9, SO2R10 or C1-6 alkyl optionally and independently substituted by one or more of hydroxyl, C1-6 alkoxy, halogen or NR8 R9; R 3 is hydrogen, halogen, CF3 or OR 7; R4 is hydrogen, halogen, CF3, OR8, NR8R9, NR8COR10, NR8S02R10 or C1-6 alkyl optionally substituted by hydroxyl, C1-6 alkoxy or NR 8 R 9; or when R3 and R4 are positioned ortho and taken together form -0(CH2)mO-, where m is 1-3; R5 is hydrogen or C1-6 alkyl optionally substituted by hydroxyl, C1-6 alkoxy or NR8 R9; R6 is hydrogen or C1-6 alkyl; R7 is hydrogen or C1-6 alkyl optionally substituted by OR8 or NR8R9; R8 is hydrogen, C1-6 alkyl, optionally substituted by hydroxyl or C1-6 alkoxy or C1-3 alkylphenyl wherein said phenyl group is optionally substituted by one or more substituents selected from halogen, C1-6 alkyl, CF3, OR7, NR8R9 or OCF3; or the groups R8 and R9 when they are attached to a nitrogen atom may together form a 5- or 6-membered ring which optionally contains one further heteroatom selected from NR7, S and O said 5 or 6 membered ring being optionally substituted by hydroxyl or C1-6 alkoxy; or the groups R8 and R9 when they are attached to a nitrogen atom may together form an azetidinyl ring optionally substituted by hydroxyl or C1-6 alkoxy; and R10 is C1-6 alkyl or a phenyl group optionally substituted by one or more substituents selected from halogen, C1-6 alkyl, CF3, OCF3 or OR7; and n is 1 or 2. The use of the compounds in treating amyloid disease is also disclosed.

No. of Pages : 78 No. of Claims : 11

(12) PATENT APPLICATION PUBLICATION
(19) INDIA
(22) Date of filing of Application :27/08/2012
(21) Application No.2053/MUMNP/2012 A
(43) Publication Date : 31/01/2014

(54) Title of the invention : HIGH TEMPERATURE ELECTROLYSER (EHT) HAVING A STACK OF ELECTROLYSIS CELLS WITH IMPROVED OPERATIONAL SATETY AND HIGH EFFICIENCY

(51) International classification :C25B1/04,C25B9/04,C25B9/18
(31) Priority Document No :1051783
(32) Priority Date :12/03/2010
(33) Name of priority country :France
(86) International Application No :PCT/EP2011/053723
Filing Date :11/03/2011
(87) International Publication No :WO 2011/110674
(61) Patent of Addition to Application Number :NA
Filing Date :NA
(62) Divisional to Application Number :NA
Filing Date :NA

(71)**Name of Applicant :**
1)COMMISSARIAT L‰NERGIE ATOMIQUE ET AUX ‰NERGIES ALTERNATIVES
Address of Applicant :25 rue Leblanc Btiment Le Ponant D F 75015 Paris France
(72)**Name of Inventor :**
1)LE GALLO Patrick
2)SARRO Jean Luc
3)PLANQUE Michel
4)REYTIER Magali

(57) Abstract :
The invention relates to a high temperature water electrolysis module having improved operating reliability wherein water vapor containing at most 1% hydrogen can be circulated simultaneously to each cathode (21 22) and to each anode (41 42) as a leaching gas of a cell stack. The cell stack is housed in a sealed casing (18) and clamping means (29 5 50 51 52) for compressing the stack are provided. The risks of leaks that can generate efficiency losses and breakage of all or part of an HTE electrolyzer are reduced while still ensuring high efficiency due to maintaining good electrical conduction by means of the compression of the stack.

No. of Pages : 35 No. of Claims : 5

(12) PATENT APPLICATION PUBLICATION
(19) INDIA
(22) Date of filing of Application :06/11/2012
(21) Application No.2530/MUMNP/2012 A
(43) Publication Date : 31/01/2014

(54) Title of the invention : IMAGE CAPTURE CONTROL FOR IN VIVO CAMERA

(51) International classification :A61B1/00,A61B1/04,A61B1/05
(31) Priority Document No :12/776434
(32) Priority Date :10/05/2010
(33) Name of priority country :U.S.A.
(86) International Application No:PCT/US2011/000526
Filing Date :21/03/2011
(87) International Publication No :WO 2011/142794
(61) Patent of Addition to Application Number :NA
Filing Date :NA
(62) Divisional to Application Number :NA
Filing Date :NA

(71)**Name of Applicant :**
1)CAPSO VISION INC.
Address of Applicant :18805 Cox Avenue Suite 250 Saratoga CA 95070 U.S.A.
(72)**Name of Inventor :**
1)LEE Chung Ta
2)WANG Kang Huai
3)WILSON Gordon C.

(57) Abstract :
Systems and methods are provided for capture control of video data from a capsule camera system having an on board storage or wireless transmission. The capsule camera system moves through the GI tract under the action of peristalsis and records images of the intestinal walls. For some periods of time the capsule camera system may move very slowly and there are little differences in the image data between different frames. These frames can be designated for discard to conserve storage space or conserve power. A capsule control processing unit is incorporated to evaluate motion metric based on image data associated with a current frame and a previous frame. A decision is made based on a profile of the motion metric to select an operation mode from a group comprising Capture Mode and Conservation Mode. The capsule camera system is then operated according to the selected operation mode.

No. of Pages : 50 No. of Claims : 22

(12) PATENT APPLICATION PUBLICATION
(19) INDIA
(22) Date of filing of Application :06/11/2012
(21) Application No.2531/MUMNP/2012 A
(43) Publication Date : 31/01/2014

(54) Title of the invention : SYSTEM AND METHOD FOR THE CONCENTRATION OF A SLURRY

(51) International classification :C02F1/469,B01D57/02,C02F11/12
(31) Priority Document No :10161498.0
(32) Priority Date :29/04/2010
(33) Name of priority country :EPO
(86) International Application No :PCT/EP2011/056728
Filing Date :28/04/2011
(87) International Publication No :WO 2011/135022
(61) Patent of Addition to Application Number :NA
Filing Date :NA
(62) Divisional to Application Number :NA
Filing Date :NA

(71)**Name of Applicant :**
1)OMYA DEVELOPMENT AG
Address of Applicant :Baslerstrasse 42 CH 4665 Oftringen Switzerland
(72)**Name of Inventor :**
1)S–TEMANN Jrg
2)EINSPIELER Herbert
3)SCHWARZ Martin

(57) Abstract :
The present invention relates to a system and a method for the concentration of slurry especially mineral containing slurry. The invention provides a system comprising an electrophoresis unit and a separation unit where the separation unit comprises a recipient preferably of half cylindrical form with adjusted flanks for separating the solid material or cake from the rotating anodes and a sliding carriage suitable for closing the recipient and stripping resting solid material from the flanks into the recipient before the solid material or cake is pressed out of the recipient by a piston.

No. of Pages : 28 No. of Claims : 39

(12) PATENT APPLICATION PUBLICATION
(19) INDIA
(22) Date of filing of Application :06/11/2012

(21) Application No.2532/MUMNP/2012 A
(43) Publication Date : 31/01/2014

(54) Title of the invention : IMPROVEMENTS IN OR RELATING TO STRUCTURAL ADHESIVES

(51) International classification :C09J5/06,C08G59/00,C09J163/00
(31) Priority Document No :1007793.1
(32) Priority Date :10/05/2010
(33) Name of priority country :U.K.
(86) International Application No :PCT/EP2011/002293
Filing Date :09/05/2011
(87) International Publication No :WO 2011/141148
(61) Patent of Addition to Application Number :NA
Filing Date :NA
(62) Divisional to Application Number :NA
Filing Date :NA

(71)**Name of Applicant :**
1)ZEPHYROS INC
Address of Applicant :160 McLean Drive Romeo MI 48065 U.S.A.
(72)**Name of Inventor :**
1)CZAPLICKI Michael

(57) Abstract :
A solid dry to the touch at ambient temperature structural adhesive which can be cured at elevated temperature and which can be moulded at an intermediate temperature is provided as well as the use of the adhesive for bonding metals.

No. of Pages : 22 No. of Claims : 13

(12) PATENT APPLICATION PUBLICATION
(19) INDIA
(22) Date of filing of Application :07/11/2012

(21) Application No.2534/MUMNP/2012 A
(43) Publication Date : 31/01/2014

(54) Title of the invention : REVERSE LINK POWER CONTROL FOR AN OFDMA SYSTEM

(51) International classification :H04B7/005
(31) Priority Document No :60/710,404
(32) Priority Date :22/08/2005
(33) Name of priority country :U.S.A.
(86) International Application No :PCT/US2006/032894
Filing Date :22/08/2006
(87) International Publication No :WO/2007/024931
(61) Patent of Addition to Application Number :NA
Filing Date :NA
(62) Divisional to Application Number :476/MUMNP/2008
Filed on :13/03/2008

(71)**Name of Applicant :**
1)QUALCOMM INCORPORATED
Address of Applicant :Attn: International IP Administration 5775 Morehouse Drive San Diego California 92121-1714 United States of America
(72)**Name of Inventor :**
1)KHANDEKAR Aamod

(57) Abstract :
Techniques for performing power control of multiple channels sent using multiple radio technologies are described. The transmit power of a reference channel, sent using a first radio technology (e.g., CDMA), is adjusted to achieve a target level of performance (e.g., a target erasure rate) for the reference channel. The transmit power of a data channel, sent using a second radio technology (e.g., OFDMA), is adjusted based on the transmit power of the reference channel. In one power control scheme, a reference power spectral density (PSD) level is determined based on the transmit power of the reference channel. A transmit PSD delta for the data channel is adjusted based on interference estimates. A transmit PSD of the data channel is determined based on the reference PSD level and the transmit PSD delta. The transmit power of the data channel is then set to achieve the transmit PSD for the data channel.

No. of Pages : 45 No. of Claims : 9

(12) PATENT APPLICATION PUBLICATION
(19) INDIA
(22) Date of filing of Application :17/09/2012
(21) Application No.2194/MUMNP/2012 A
(43) Publication Date : 31/01/2014

(54) Title of the invention : MICROCAPSULE INCORPORATION IN STRUCTURED LIQUID DETERGENTS

(51) International classification :C11D11/00,C11D17/00,C11D3/50
(31) Priority Document No :10158692.3
(32) Priority Date :31/03/2010
(33) Name of priority country :EPO
(86) International Application No :PCT/EP2011/053561
Filing Date :09/03/2011
(87) International Publication No :WO 2011/120772
(61) Patent of Addition to Application Number :NA
Filing Date :NA
(62) Divisional to Application Number :NA
Filing Date :NA

(71)**Name of Applicant :**
1)HINDUSTAN UNILEVER LIMITED
Address of Applicant :Unilever House B.D. Sawant Marg Chakala Andheri East Mumbai 400 099 Maharashtra India
(72)**Name of Inventor :**
1)CRAVEN Richard Michael
2)DOYLE Colin Lee
3)HUSSEY Ian James
4)LAVERY Aidan Joseph
5)PHILIP Jojo

(57) Abstract :
A process for the incorporation of microcapsules with anionic charge into a structured aqueous concentrated liquid detergent comprising at least 30 wt% preferably at most 65 wt% total surfactant of which at least 5 wt% based on the total composition is anionic surfactant including soap and an external structurant the process comprising the combining of two premixes; Premix A which is the structured aqueous concentrated liquid detergent composition without microcapsules and Premix B which comprises an aqueous dispersion of the microcapsules with anionic charge characterised in that: Premix B is a slurry of microcapsules with a maximum viscosity at 25°C of 100 mPas and at least 90 wt% of the microcapsules having a particle size in the range 5 to 30 microns and that Premix B is added to Premix A and the resulting combined mixture is passed through a static in line mixer with an energy input of from 20 to 500 J/kg to form immediately after the mixer a structured liquid comprising less than 10% based on the total number of groups of microcapsules agglomerated groups of microcapsules an agglomerated group of microcapsules being defined as a group having more than 5 microcapsules grouped together.

No. of Pages : 41 No. of Claims : 6

(12) PATENT APPLICATION PUBLICATION
(19) INDIA
(22) Date of filing of Application :28/09/2012
(21) Application No.2292/MUMNP/2012 A
(43) Publication Date : 31/01/2014

(54) Title of the invention : SITAGLIPTIN INTERMEDIATE COMPOUNDS PREPARATION METHODS AND USES THEREOF

(51) International classification :C07C229/34,C07C227/00,C07C59/90
(31) Priority Document No :201010135469.8
(32) Priority Date :25/03/2010
(33) Name of priority country :China
(86) International Application No :PCT/CN2011/072050
Filing Date :22/03/2011
(87) International Publication No :WO 2011/116686
(61) Patent of Addition to Application Number :NA
Filing Date :NA
(62) Divisional to Application Number :NA
Filing Date :NA

(71)**Name of Applicant :**
1)ZHEJIANG JIUZHOU PHARMACEUTICAL CO. LTD.
Address of Applicant :99 Wai Sha Road Jiaojiang District Taizhou Zhejiang 318000 China
(72)**Name of Inventor :**
1)GAO Hongjun
2)LI Min

(57) Abstract :
Sitagliptin intermediate compounds of formula (f) preparation methods and uses thereof are provided. The compounds of formula (f) are prepared by the following steps: compounds of formula (a) are subjected to electrophilic reaction with benzyl halides to form compounds of formula (b) which then react with compounds of formula (i) to form new compounds of formula (e); Grignard agents formed from 2 4 5 trifluoro bromobenzene react with compounds of formula (e) to form compounds of formula (f) which are new intermediate compounds for the preparation of Sitagliptin intermediates of formula (g) . The compounds of formula (f) are subjected to reduction by Pd/C debenzylation substitution of protecting group to form the compounds of formula (g). The mentioned compounds have the following structures wherein R is the protecting group of carboxyl R is (substituted) hydrocarbyl.

No. of Pages : 22 No. of Claims : 17

(12) PATENT APPLICATION PUBLICATION
(19) INDIA
(22) Date of filing of Application :08/11/2012
(21) Application No.2540/MUMNP/2012 A
(43) Publication Date : 31/01/2014

(54) Title of the invention : UNICONDYLAR KNEE REPLACEMENT

(51) International classification :A61B17/15,A61B17/17
(31) Priority Document No :1006590.2
(32) Priority Date :20/04/2010
(33) Name of priority country :U.K.
(86) International Application No :PCT/GB2011/050780
Filing Date :20/04/2011
(87) International Publication No :WO 2011/131983
(61) Patent of Addition to Application Number :NA
Filing Date :NA
(62) Divisional to Application Number :NA
Filing Date :NA

(71)**Name of Applicant :**
1)BIOMET UK LIMITED
Address of Applicant :Waterton Industrial Estate Bridgend Mid Glamorgan CF31 3XA U.K.
2)HUNSLEY Colin
(72)**Name of Inventor :**
1)OCONNOR John
2)DODD Chris
3)MURRAY David

(57) Abstract :
A kit of parts for use in unicondylar knee replacement of a patient having a femur and a tibia comprises a drill guide (4) and an intramedullary rod (5) the intramedullary rod being sized to fit within the intramedullary canal of the femur of the patient. The drill guide is arranged so as to engage a distal end of the intramedullary rod to that which engages the patient s intramedullary canal and is formed with a foot portion (9) sized to fit between the patient s femur and tibia before any bone is removed from the femur or tibia. The drill guide provides a guide for drilling of at least one hole in the femur. A further kit of parts for use in unicondylar knee replacement of a patient having a femur and a tibia comprises a femoral component (3) for implantation in the femur the femoral component having a bearing surface having a radius of curvature and a guide spoon (13). The guide spoon has a bowl shaped portion (14) with an internal radius of curvature the same as that of the bearing surface and a handle portion (16) extending from the bowl shaped portion. Methods of performing unicondylar knee replacement are also described.

No. of Pages : 23 No. of Claims : 22

(12) PATENT APPLICATION PUBLICATION
(19) INDIA
(22) Date of filing of Application :25/09/2012
(21) Application No.2244/MUMNP/2012 A
(43) Publication Date : 31/01/2014

(54) Title of the invention : RAPIER AND GRIPPER WEAVING MACHINE

(51) International classification :D03D47/20,D03D47/23
(31) Priority Document No :BE 2010/0257
(32) Priority Date :29/04/2010
(33) Name of priority country :Belgium
(86) International Application No :PCT/EP2011/056558
Filing Date :26/04/2011
(87) International Publication No :WO 2011/134953
(61) Patent of Addition to Application Number :NA
Filing Date :NA
(62) Divisional to Application Number :NA
Filing Date :NA

(71)**Name of Applicant :**
1)PICANOL
Address of Applicant :Karel Steverlyncklaan 15 B 8900 Ieper Belgium
(72)**Name of Inventor :**
1)MOENECLAEY Denis

(57) Abstract :
Rapier for a gripper weaving machine and gripper weaving machine wherein the rapier (1) comprises a gripper band (2) and a wear resistant element (20) which is added to the gripper band (2) the gripper band (2) comprises a stiff top (10) to which the wear resistant element (20) can be connected the stiff top (10) and the wear resistant element (20) comprise complementary connecting parts (6 7) which comprise a tongue (11) and a recess (21) the tongue (11) can be introduced by sliding it into the recess (21) in an introduction direction (I) and the tongue (11) is held in the recess (21) in a form fitted manner in the directions other than the introduction direction (I) wherein a gripper (3) can be attached to the stiff top (10) and to the wear resistant element (20) by fastening elements (14 24) which are positioned in zones (15 16) which do not coincide with a connecting part (6) of the wear resistant element (20) or with a connecting part (7) of the stiff top (10).

No. of Pages : 29 No. of Claims : 14

(12) PATENT APPLICATION PUBLICATION
(19) INDIA
(22) Date of filing of Application :25/09/2012
(21) Application No.2245/MUMNP/2012 A
(43) Publication Date : 31/01/2014

(54) Title of the invention : METHOD FOR THE ABSORPTIVE DRYING OF PURIFIED BIOGAS AND FOR REGENERATING LADEN ADSORBENTS

(51) International classification :B01D53/26
(31) Priority Document No :10 2010 011 347.6
(32) Priority Date :12/03/2010
(33) Name of priority country :Germany
(86) International Application No :PCT/EP2011/001116
Filing Date :08/03/2011
(87) International Publication No :WO 2011/110322
(61) Patent of Addition to Application Number :NA
Filing Date :NA
(62) Divisional to Application Number :NA
Filing Date :NA

(71)**Name of Applicant :**
1)DGE DR. ING. GNTHER ENGINEERING GMBH
Address of Applicant :Dessauer Strasse 6a 06886 Wittenberg Germany
(72)**Name of Inventor :**
1)GNTHER Lothar

(57) Abstract :
The invention relates to a method for the adsorptive drying of purified biogas and for regenerating laden absorbents wherein the dried biogas is forwarded for further usage. Proceeding from the drawbacks of the known prior art a method is to be provided in which no foreign matter can enter the purified biogas the content of methane in the gas to be purified remains virtually unchanged and the effort involved in regenerating the laden adsorbent is reduced. According to the invention drying and regeneration are carried out as a closed biogas cycle wherein separate layers on the basis of silica gel and molecular sieves are used as the adsorbent wherein the biogas to be dried flows first through the silica gel layer. In order to regenerate the adsorbent exclusively heated dried biomethane having a temperature of up to 150°C is used which after contact with adsorbent is recirculated to the outflow of purified biogas. Once regeneration has been effected the bed is cooled by means of biomethane which is subsequently recirculated to the outflow of purified biogas. Methane containing water accumulating during drying and regeneration is recirculated to the biogas generation and/or purification.

No. of Pages : 16 No. of Claims : 11

(12) PATENT APPLICATION PUBLICATION
(19) INDIA
(22) Date of filing of Application :12/11/2012
(21) Application No.2552/MUMNP/2012 A
(43) Publication Date : 31/01/2014

(54) Title of the invention : WEARABLE THERAPEUTIC DEVICE

(51) International classification :A61N1/39
(31) Priority Document No :61/345947
(32) Priority Date :18/05/2010
(33) Name of priority country :U.S.A.
(86) International Application No :PCT/US2011/036767
Filing Date :17/05/2011
(87) International Publication No :WO 2011/146448
(61) Patent of Addition to Application Number :NA
Filing Date :NA
(62) Divisional to Application Number :NA
Filing Date :NA

(71)**Name of Applicant :**
1)ZOLL MEDICAL CORPORATION
Address of Applicant :269 Mill Road Cheimsford MA 01824 U.S.A.
(72)**Name of Inventor :**
1)KAIB Thomas E.
2)VOLPE Shane S.
3)OSKIN Emil

(57) Abstract :
A wearable therapeutic device that includes a garment configured to contain an external defibrillaior. The garment is configured to house at least one of an alann module and a monitor and to house a first therapy electrode and a second therapy electrode. The garment is also configured to releasably receive a receptacle that contains a conductive fluid proximate to at least one of the first therapy electrode and the second therapy electrode and to electrically couple the receptacle with the garment.

No. of Pages : 55 No. of Claims : 31

(12) PATENT APPLICATION PUBLICATION
(19) INDIA
(22) Date of filing of Application :12/11/2012
(21) Application No.2554/MUMNP/2012 A
(43) Publication Date : 31/01/2014

(54) Title of the invention : WEARABLE AMBULATORY MEDICAL DEVICE WITH MULTIPLE SENSING ELECTRODES

(51) International classification :A61B5/0402
(31) Priority Document No :61/345914
(32) Priority Date :18/05/2010
(33) Name of priority country :U.S.A.
(86) International Application No :PCT/US2011/036805
Filing Date :17/05/2011
(87) International Publication No :WO 2011/146482
(61) Patent of Addition to Application Number :NA
Filing Date :NA
(62) Divisional to Application Number :NA
Filing Date :NA

(71)**Name of Applicant :**
1)ZOLL MEDICAL CORPORATION
Address of Applicant :269 Mill Road Chelmsford MA 01824 U.S.A.
(72)**Name of Inventor :**
1)KAIB Thomas E.
2)VOLPE Shane S.
3)MACHO John D.

(57) Abstract :
An ambulatory medical device including a plurality of electrodes configured to be disposed at spaced apart positions about a patient s body an electrode signal acquisition circuit and a monitoring circuit. The acquisition circuit has a plurality of inputs each electrically coupled to a respective electrode of the plurality of electrodes and is configured to sense a respective signal provided by a plurality of different pairings of the plurality of electrodes. The monitoring circuit is electrically coupled to an output of the acquisition circuit and is configured to analyze the respective signal provided by each of the plurality of different pairings and to instruct the acquisition circuit to select at least one of the plurality of different pairings to monitor based on at least one of the quality of the respective signal a phase difference between the respective signal and that of other pairings and other criteria.

No. of Pages : 65 No. of Claims : 40

(12) PATENT APPLICATION PUBLICATION
(19) INDIA
(22) Date of filing of Application :20/08/2012
(21) Application No.1997/MUMNP/2012 A
(43) Publication Date : 31/01/2014

(54) Title of the invention : SURGICAL CUTLERY AND MANUFACTURING METHOD THEREOF

(51) International classification :A61B 17/06
(31) Priority Document No :2010-040003
(32) Priority Date :25/02/2010
(33) Name of priority country :Japan
(86) International Application No :PCT/JP2011/054258
Filing Date :25/02/2011
(87) International Publication No :WO/2011/105541
(61) Patent of Addition to Application Number :NA
Filing Date :NA
(62) Divisional to Application Number :NA
Filing Date :NA

(71)**Name of Applicant :**
1)MANI Inc.
Address of Applicant :8-3 Kiyohara Industrial Park Utsunomiya-shi Tochigi 3213231 Japan.
(72)**Name of Inventor :**
1)MATSUTANI Kanji

(57) Abstract :
A surgical cutlery and a manufacturing method thereof which prevent over-etching and reduce pierce resistance are provided. The manufacturing method of the surgical cutlery made of a round bar material 15 of austenitic stainless steel with a fibrous structure includes the steps of: forming a working portion 16 of the cutlery from the round bar material 15 for piercing or cutting a living tissue wherein the fibrous structure runs along an axis a; forming a wheel mark 24 on the working portion of the surgical cutlery; and etching the working portion 23 after etching. The etching is performed to the limit that allows creation of a plurality of craters on the working portion but does not allow creation of grooves along the fibrous structure. Afterwards application of silicone is performed on the resulting surface .

No. of Pages : 19 No. of Claims : 4

(12) PATENT APPLICATION PUBLICATION
(19) INDIA
(22) Date of filing of Application :20/08/2012
(21) Application No.1998/MUMNP/2012 A
(43) Publication Date : 31/01/2014

(54) Title of the invention : METHODS FOR PREPARING AND DECODING TWO-DIMENSIONAL COLOR CODES

(51) International classification	:G06K 19/06,G06K 1/12
(31) Priority Document No	:2010-049219
(32) Priority Date	:05/03/2010
(33) Name of priority country	:Japan
(86) International Application No	:PCT/JP2011/054794
Filing Date	:02/03/2011
(87) International Publication No	:WO/2011/108605
(61) Patent of Addition to Application Number	:NA
Filing Date	:NA
(62) Divisional to Application Number	:NA
Filing Date	:NA

(71)**Name of Applicant :**
1)Colour Code Technologies Co. Ltd.
Address of Applicant :1-29-13 Shinkawa Chuo-ku Tokyo 104-0033 Japan
(72)**Name of Inventor :**
1)Yoshiyuki TAKURA
2)Kenji ICHINOSE
3)Tatahiro MIWA

(57) Abstract :
In order to obtain a multicolor and reduced cell for recoding electronic data into two-dimensional color code with high density, needed are a guide code portion having a code system easy to read and decode and a data record code portion having a code system enabling high-precision record. By reading and decoding the guide code portion with an image receiving apparatus, the position of the date record code portion is judged and decoded. Through obtaining numerical information including the number of cells, for example, the position of measurement pixels used for judgment of the color of each cell of the data record code portion can be judged with high precision for a short period of time. In addition, when there is decoding error, the error is revised through displacement of the position of the measurement pixels. No judgment is made by confrontation between whether the each cell has a color belonging to what used colors and the reference colors displayed around the two-dimensional code. Through quantization of the colors of the pixels in the cell into used colors, record density can be heightened while maintaining the precision of discrimination of the cell color.

No. of Pages : 38 No. of Claims : 5

(12) PATENT APPLICATION PUBLICATION
(19) INDIA
(22) Date of filing of Application :20/08/2012
(21) Application No.1999/MUMNP/2012 A
(43) Publication Date : 31/01/2014

(54) Title of the invention : TURBINE

(51) International classification	:F01D 11/08,F01D11/02
(31) Priority Document No	:2010-040920
(32) Priority Date	:25/02/2010
(33) Name of priority country	:Japan
(86) International Application No	:PCT/JP2011/051576
Filing Date	:27/01/2011
(87) International Publication No	:WO/2011/105155
(61) Patent of Addition to Application Number	:NA
Filing Date	:NA
(62) Divisional to Application Number	:NA
Filing Date	:NA

(71)**Name of Applicant :**
1)MITSUBISHI HEAVY INDUSTRIES LTD.
Address of Applicant :16-5 Konan 2-chome Minato-ku Tokyo 1088215 Japan
(72)**Name of Inventor :**
1)MATSUMOTO Kazuyuki
2)KUWAMURA Yoshihiro
3)OYAMA Hiroharu
4)TANAKA Yoshinori
5)MATSUO Asaharu

(57) Abstract :
Provided is a turbine in which seal fins (15) are provided to a hub shroud (41) to protrude toward a bottom surface (33a) of an annular groove (33), small gaps (H) are formed between the tip ends of the seal fins and the bottom surface of the annular groove, and assuming that the axial distance between a first seal fin (15a) disposed on the front edge side of the hub shroud among the seal fins and a front edge (41a) of the hub shroud is (L) and the axial distance between the front edge of the hub shroud and an inside surface (33b) of the annular groove is (Bu), the first seal fin is disposed to satisfy L/Bu<0.3.

No. of Pages : 41 No. of Claims : 5

(12) PATENT APPLICATION PUBLICATION
(19) INDIA
(22) Date of filing of Application :12/11/2012
(21) Application No.2555/MUMNP/2012 A
(43) Publication Date : 31/01/2014

(54) Title of the invention : OCEAN BOTTOM SEISMIC CABLE RECORDING APPARATUS

(51) International classification :G01V1/38,G01V1/16
(31) Priority Document No :20100660
(32) Priority Date :07/05/2010
(33) Name of priority country :Norway
(86) International Application No :PCT/NO2011/000147
Filing Date :06/05/2011
(87) International Publication No :WO 2011/139159
(61) Patent of Addition to Application Number :NA
Filing Date :NA
(62) Divisional to Application Number :NA
Filing Date :NA

(71)**Name of Applicant :**
1)MAGSEIS AS
Address of Applicant :Gaustadallen 21 N 0349 Oslo Norway
(72)**Name of Inventor :**
1)GATEMAN Jan
2)GIMSE Ivar

(57) Abstract :
An ocean bottom seismic cable recording apparatus comprising a plurality of seismic node casings (1) said node casings being separated from each other by separate stress member sections (2) each stress member section having acoustic decoupling arrangements (3) at each end connecting to said seismic node casings (1) and where each seismic node casing comprising an autonomous sensor capsule (5) for sensing and recording seismic data and wherein the autonomous sensor capsule (5) is removable from said seismic node casing (1) and wherein each seismic node casing (1) further comprising an inner compartment (4) accommodating the autonomous sensor capsule (5).

No. of Pages : 36 No. of Claims : 31

(12) PATENT APPLICATION PUBLICATION
(19) INDIA
(22) Date of filing of Application :25/09/2012
(21) Application No.2251/MUMNP/2012 A
(43) Publication Date : 31/01/2014

(54) Title of the invention : HAIR CARE COMPOSITION COMPRISING ALKYL MODIFIED SILOXANE

(51) International classification :A61K8/891,A61Q5/02,A61Q5/12
(31) Priority Document No :10158148.6
(32) Priority Date :29/03/2010
(33) Name of priority country :EPO
(86) International Application No :PCT/EP2011/052113
Filing Date :14/02/2011
(87) International Publication No :WO 2011/120736
(61) Patent of Addition to Application Number :NA
Filing Date :NA
(62) Divisional to Application Number :NA
Filing Date :NA

(71)**Name of Applicant :**
1)HINDUSTAN UNILEVER LIMITED
Address of Applicant :Unilever House B.D. Sawant Marg Chakala Andheri East Mumbai 400 099 Maharashtra India
(72)**Name of Inventor :**
1)MURRAY Andrew Malcolm
2)PHAM Thuy Anh

(57) Abstract :
A hair care composition comprising: i) a cleaning phase comprising a cleansing anionic surfactant which is a salt and comprises an alkyl group with from 8 to 14 carbons; ii) an aqueous conditioning gel network having no overall charge or is anionic the gel network comprising: (a) fatty material; (b) a gel network anionic surfactant comprising an alkyl group with from 16 to 30 carbons; (c) cationic surfactant; and iii) a silicone system comprising emulsified particles of an alkyl modified silicone wherein the alkyl modified silicone is characterised by the general formula (I): (CH)Si O [Si(CH)(R)O] [Si(CH)O] Si(CH) in which m has a value of 1 to 450 n has a value of 1 to 3000 and R is a monovalent alkyl radical of from 8 to 60 carbon atoms and is fluid under ambient conditions.

No. of Pages : 35 No. of Claims : 12

(12) PATENT APPLICATION PUBLICATION
(19) INDIA
(22) Date of filing of Application :13/11/2012
(21) Application No.2561/MUMNP/2012 A
(43) Publication Date : 31/01/2014

(54) Title of the invention : A COMBINED COMPRESSION AND ABSORPTION DRESSING/BANDAGE

(51) International classification :A61F13/15
(31) Priority Document No :2010/03269 (ZA)
(32) Priority Date :07/05/2010
(33) Name of priority country :South Africa
(86) International Application No :PCT/IB2011/052034
Filing Date :09/05/2011
(87) International Publication No :WO/2011/138771
(61) Patent of Addition to Application Number :NA
Filing Date :NA
(62) Divisional to Application Number :NA
Filing Date :NA

(71)**Name of Applicant :**
1)IWMT INTELLECTUAL PROPERTY HOLDINGS (PTY) LTD
Address of Applicant :Display Gardens Unit 2 No. 6 Sarel Baard Crescent Gateway Industrial Park 0157 Centurion Republic of South Africa
(72)**Name of Inventor :**
1)MOUTON Johannes Petrus

(57) Abstract :
A combined compression and absorption dressing/bandage which includes a short stretch compression bandage and at least one absorptive wound dressing comprising at least one absorbent layer of a non-woven fabric of any one or more of cotton viscose and polyester fibres the absorbent layer having an operative inner face and an operative outer face the at least one wound dressing being bonded to the short stretch compression bandage with its inner face towards the bandage and the outer face facing away from the bandage.

No. of Pages : 23 No. of Claims : 33

(12) PATENT APPLICATION PUBLICATION
(19) INDIA
(22) Date of filing of Application :15/11/2012
(21) Application No.2563/MUMNP/2012 A
(43) Publication Date : 31/01/2014

(54) Title of the invention : TOILET SEAT LIFTER AND ROTARY SPRING-LOADED ACTUATOR

(51) International classification	:A47K13/12, A47K13/10
(31) Priority Document No	:P391078
(32) Priority Date	:27/04/2010
(33) Name of priority country	:Poland
(86) International Application No	:PCT/PL2011/000039
Filing Date	:20/04/2011
(87) International Publication No	:WO/2011/136669
(61) Patent of Addition to Application Number	:NA
Filing Date	:NA
(62) Divisional to Application Number	:NA
Filing Date	:NA

(71)**Name of Applicant :**
1)ZBIGNIEW KORZELSKI - DELKI POLPOINT
Address of Applicant :ul. Wadowicka 12/405 PL-30-415 Krak³w Poland
(72)**Name of Inventor :**
1)KORZELSKI Zbigniew

(57) Abstract :
The toilet seat lifter is mounted together with the toilet seat on a toilet bowl. The design of the lifter as invented enables the lifting and lowering of a toilet cover and/or toilet seat by means of a lifter controlling device or in the traditional manner. During the lifting of the toilet seat the gear of the device assists the lifting of its components while in the case of lowering them the gear prevents their inert from falling. The design of the lifter enables the positioning of the toilet seat in a lifted position preventing their resting against the wall or toilet cistern. In case of improper use consisting in the lifting of the toilet seat components by means of a controlling device and simultaneously lowering them in the traditional manner (or inversely) the disconnection of the gear will result precluding its damage.

No. of Pages : 78 No. of Claims : 17

(12) PATENT APPLICATION PUBLICATION
(19) INDIA
(22) Date of filing of Application :15/11/2012
(21) Application No.2564/MUMNP/2012 A
(43) Publication Date : 31/01/2014

(54) Title of the invention : SYSTEM AND METHOD FOR PARALLELING ELECTRICAL POWER GENERATORS

(51) International classification :H02J3/00
(31) Priority Document No :12/873608
(32) Priority Date :01/09/2010
(33) Name of priority country :U.S.A.
(86) International Application No :PCT/US2011/049949
Filing Date :31/08/2011
(87) International Publication No :WO 2012/030947
(61) Patent of Addition to Application Number :NA
Filing Date :NA
(62) Divisional to Application Number :NA
Filing Date :NA

(71)**Name of Applicant :**
1)KOHLER CO.
Address of Applicant :444 Highland Drive Kohler WI 53044 U.S.A.
(72)**Name of Inventor :**
1)DORN Douglas W.
2)FRAMPTON Isaac S.

(57) Abstract :
A plurality of generators can be connected in parallel to a common electrical bus. Each generator has a controller that regulates the voltage and frequency of the electricity being produced. Before a given generator connects to the electrical bus its controller senses whether electricity is present on the bus and if not the connection is made. Otherwise the controller synchronizes the electricity being produced to the electricity is present on the bus before the connection occurs. The controller in each generator may also implement a load sharing function which ensures that the plurality of generators equitably share in providing the total amount of power demanded by the loads. The load sharing can be accomplished by controlling the generators to operate a substantially identical percentages of their individual maximum power generation capacity.

No. of Pages : 33 No. of Claims : 26

(12) PATENT APPLICATION PUBLICATION
(19) INDIA
(22) Date of filing of Application :17/11/2012
(21) Application No.2575/MUMNP/2012 A
(43) Publication Date : 31/01/2014

(54) Title of the invention : MONO-COMPONENT POLYURETHANE RESIN COMPOUND TO PREVENT PEELING OF CONCRETE SHEETS AND TILE AND PEELING PREVENTION METHOD FOR CONCRETE SHEETS AND TILES USING SAME

(51) International classification	:E01D22/00, E04F13/18, E04G23/00,
(31) Priority Document No	:2010-125657
(32) Priority Date	:01/06/2010
(33) Name of priority country	:Japan
(86) International Application No	:PCT/JP2011/062590
Filing Date	:01/06/2011
(87) International Publication No	:WO/2011/152450
(61) Patent of Addition to Application Number	:NA
Filing Date	:NA
(62) Divisional to Application Number	:NA
Filing Date	:NA

(71)**Name of Applicant :**
1)DYFLEX CORPORATION
Address of Applicant :2-4-1 Nishi-Shinjuku Shinjuku-ku Tokyo 1630825 Japan
2)AUTO CHEMICAL INDUSTRY CO. LTD.
(72)**Name of Inventor :**
1)YANO Noriyoshi
2)TAKEDA Tsuyoshi
3)SATO Koji
4)YAOITA Megumi

(57) Abstract :
The present invention provides a one-component type polyurethane resin composition for preventing detachment of concrete pieces and tiles containing an isocyanate group-containing urethane prepolymer (A) and a thixotropy-imparting agent (B) and a method for forming a reinforcing layer on a surface of a concrete structure or tiled wall containing a resin coated film composed thereof in order to provide a one-component type polyurethane resin composition for preventing detachment of concrete pieces and tiles which has superior workability by being able to be applied with a trowel or brush forms a transparent resin coated film after reactive curing that has superior weather resistance without applying a top coat facilitates diagnosis of deterioration of concrete by being carried out visually during maintenance of concrete structures is able to maintain the existing appearance of the tiled exteriors of buildings and other structures and eliminates dispersion to surrounding areas during application.

No. of Pages : 53 No. of Claims : 10

(12) PATENT APPLICATION PUBLICATION
(19) INDIA
(22) Date of filing of Application :17/11/2012
(21) Application No.2576/MUMNP/2012 A
(43) Publication Date : 31/01/2014

(54) Title of the invention : INTERLAMINAR BONDING AGENT AND WATERPROOF STRUCTURE AND WATERPROOFING METHOD

(51) International classification	:C09J163/00, C09J175/04, C09J5/00
(31) Priority Document No	:2010-149117
(32) Priority Date	:30/06/2010
(33) Name of priority country	:Japan
(86) International Application No	:PCT/JP2011/064917
Filing Date	:29/06/2011
(87) International Publication No	:WO/2012/002437
(61) Patent of Addition to Application Number	:NA
Filing Date	:NA
(62) Divisional to Application Number	:NA
Filing Date	:NA

(71)**Name of Applicant :**
1)DYFLEX CORPORATION
Address of Applicant :2-4-1 Nishi-Shinjuku Shinjuku-ku Tokyo 1630825 Japan
(72)**Name of Inventor :**
1)HIGASHI Katsuhiro
2)YANO Noriyoshi

(57) Abstract :
One object of the present invention is to provide an interlayer adhesive which can firmly adhere a waterproof layer and an inorganic material layer and problems of water leak or the like can be suppressed over the long term and the present invention provides an interlayer adhesive which is interposed between a waterproof layer formed from a resin-coated film and an inorganic material layer using mortar or concrete to adhere the waterproof layer and the inorganic material layer to each other the interlayer adhesive containing a resin composition obtained by reacting (a) a base resin including an emulsion of a main resin containing at least one of an acrylic-based resin an ethylene-vinyl acetate-based resin and an epoxy-based resin with (b) an isocyanate compound having an isocyanate group.

No. of Pages : 52 No. of Claims : 17

(12) PATENT APPLICATION PUBLICATION
(19) INDIA
(22) Date of filing of Application :17/11/2012
(21) Application No.2577/MUMNP/2012 A
(43) Publication Date : 31/01/2014

(54) Title of the invention : AN INTRAMEDULLARY FIXATION ASSEMBLY AND METHOD OF USE

(51) International classification :A61B17/56
(31) Priority Document No :12/802,187
(32) Priority Date :01/06/2010
(33) Name of priority country :U.S.A.
(86) International Application No :PCT/US2011/038785
Filing Date :01/06/2011
(87) International Publication No :WO/2011/153258
(61) Patent of Addition to Application Number :NA
Filing Date :NA
(62) Divisional to Application Number :NA
Filing Date :NA

(71)**Name of Applicant :**
1)EXTREMITY MEDICAL LLC
Address of Applicant :300 Interpace Parkway Suite 410 Parsippany NJ 07054 UNITED STATES OF AMERICA
(72)**Name of Inventor :**
1)TYBER Jeff
2)GANNOE Jamy
3)KIEFER Lawrence
4)DONLEY Brian Gerard
5)ADAMS Brian

(57) Abstract :
A method for applying compression to a joint includes providing an intramedullary fixation assembly having a proximal screw member positioned at a proximal end of the intramedullary fixation assembly and a lag screw member positioned at a distal end of the intramedullary fixation assembly. Medullary canals are drilled in a first and second bone and the medullary canals are reamed. The proximal screw member is inserted into the first bone and a drill is used create a dorsal hole in the first bone. The lag screw member is slideably coupled to the dorsal hole and to the proximal screw member and into the second medullary canal. A torque is applied to the lag screw member to apply compression to the joint.

No. of Pages : 44 No. of Claims : 62

(12) PATENT APPLICATION PUBLICATION
(19) INDIA
(22) Date of filing of Application :19/11/2012
(21) Application No.2578/MUMNP/2012 A
(43) Publication Date : 31/01/2014

(54) Title of the invention : NEW USES OF OXYTOCIN LIKE MOLECULES AND RELATED METHODS

(51) International classification :A61K38/11,A61P3/10,A61P3/04
(31) Priority Document No :61/345616
(32) Priority Date :18/05/2010
(33) Name of priority country :U.S.A.
(86) International Application No :PCT/IB2011/052156
Filing Date :17/05/2011
(87) International Publication No :WO 2011/145051
(61) Patent of Addition to Application Number :NA
Filing Date :NA
(62) Divisional to Application Number :NA
Filing Date :NA

(71)**Name of Applicant :**
1)UNIVERSIT‰ DE GENˆVE
Address of Applicant :24 rue du Gnral Dufour CH 1211 Geneva 4 Switzerland
(72)**Name of Inventor :**
1)ROHNER JEANRENAUD Fran§oise
2)DEBLON Nicolas

(57) Abstract :
The present invention is directed to a derivative selected from oxytocin an oxytocin derivative and an oxytocin agonist useful for the treatment of a disorder selected from obesity and insulin resistance and related methods and pharmaceutical formulations. In particular the invention relates to a derivative selected from oxytocin an oxytocin derivative and an oxytocin agonist useful in the treatment of metabolic syndrome.

No. of Pages : 48 No. of Claims : 20

(12) PATENT APPLICATION PUBLICATION
(19) INDIA
(22) Date of filing of Application :06/11/2012
(21) Application No.2523/MUMNP/2012 A
(43) Publication Date : 31/01/2014

(54) Title of the invention : PROCESS FOR THE PURIFICATION OF RECOMBINANT HUMAN IL-1 1

(51) International classification :C07K1/18,C07K1/20,C07K14/31
(31) Priority Document No :608/KOL/2010
(32) Priority Date :04/06/2010
(33) Name of priority country :India
(86) International Application No :PCT/IB2011/001220
Filing Date :03/06/2011
(87) International Publication No :WO 2011/151716
(61) Patent of Addition to Application Number :NA
Filing Date :NA
(62) Divisional to Application Number :NA
Filing Date :NA

(71)**Name of Applicant :**
1)LUPIN LIMITED
Address of Applicant :159 CST Road Kalina Santacruz (East) 400 098 Mumbai State of Maharashtra India
(72)**Name of Inventor :**
1)MUNESHWAR Praveen
2)PADMANABHAN Sriram

(57) Abstract :
The invention relates to process for purification of recombinant human IL 1 1 from microbial cells. The method involves purification using hydrophobic interaction chromatography and ion exchange chromatography. The method further comprises use one or more fusion tags which provides solubility to the protein and also simplifies the purification of the target protein.

No. of Pages : 17 No. of Claims : 9

(12) PATENT APPLICATION PUBLICATION
(19) INDIA
(22) Date of filing of Application :06/11/2012
(21) Application No.2524/MUMNP/2012 A
(43) Publication Date : 31/01/2014

(54) Title of the invention : PROCESS FOR PRODUCTION OF FUSION PROTEINS USING TRUNCATED E. COLI THIOREDOXIN

(51) International classification :C12N9/02,C12N15/62
(31) Priority Document No :609/KOL/2010
(32) Priority Date :04/06/2010
(33) Name of priority country :India
(86) International Application No :PCT/IB2011/001246
Filing Date :03/06/2011
(87) International Publication No :WO 2011/151721
(61) Patent of Addition to Application Number :NA
Filing Date :NA
(62) Divisional to Application Number :NA
Filing Date :NA

(71)**Name of Applicant :**
1)LUPIN LIMITED
Address of Applicant :159 CST Road Kalina Santacruz (East) Mumbai 400 098 State of Maharashtra India
(72)**Name of Inventor :**
1)SALUNKHE Shardul
2)PRASAD Bhaskarjyoti
3)PADMANABHAN Sriram
4)PRASAD Ketaki Sabnis
5)RAIKER Veena Pai

(57) Abstract :
The present invention relates in general to a process of production of recombinant heterologous proteins using fusion proteins of truncated E. coli thioredoxin. Further the invention relates to the fusion proteins of truncated thioredoxin to increase the production activity stability or solubility of recombinant heterologous proteins. The peptide or protein may be fused to the carboxyl terminus of the truncated thioredoxin molecule. The protein of interest includes PTH (1 34).

No. of Pages : 23 No. of Claims : 12

(12) PATENT APPLICATION PUBLICATION
(19) INDIA
(22) Date of filing of Application :27/11/2012
(21) Application No.2635/MUMNP/2012 A
(43) Publication Date : 31/01/2014

(54) Title of the invention : PROCESS FOR THE PREPARATION OF CHIRAL BETA AMINO CARBOXAMIDE DERIVATIVES

(51) International classification :C07C231/02,C07D487/04
(31) Priority Document No :1358/MUM/2010
(32) Priority Date :28/04/2010
(33) Name of priority country :India
(86) International Application No :PCT/IN2011/000289
Filing Date :28/04/2011
(87) International Publication No :WO 2011/135586
(61) Patent of Addition to Application Number :NA
Filing Date :NA
(62) Divisional to Application Number :NA
Filing Date :NA

(71)**Name of Applicant :**
1)SUN PHARMACEUTICAL INDUSTRIES LTD.
Address of Applicant :17/b Mahal Industrial Estate Off Mahakali Caves Road Andheri East Mumbai 400 093 Maharashtra India
(72)**Name of Inventor :**
1)JADAV Kanaksinh Jesingbhai
2)BHATT Rutvij Manharlal
3)BORKHATARIA Kamleshkumar Naranbhai
4)CHITTURI Trinadha Rao
5)THENNATI Rajamannar

(57) Abstract :
The present invention provides a process for preparing a compound of formula (I) or a pharmaceutically acceptable salt thereof having the configuration of formula (IA) or configuration of formula (IB) selectively over the other enantiomer.

No. of Pages : 31 No. of Claims : 15

(12) PATENT APPLICATION PUBLICATION
(19) INDIA
(22) Date of filing of Application :27/11/2012
(21) Application No.2636/MUMNP/2012 A
(43) Publication Date : 31/01/2014

(54) Title of the invention : HIGH REFRACTIVE INDEX, ACRYLIC OPHTHALMIC DEVICE MATERIALS WITH REDUCED GLISTENINGS

(51) International classification :A61L 27/16
(31) Priority Document No :61/356,963
(32) Priority Date :21/06/2010
(33) Name of priority country :U.S.A.
(86) International Application No :PCT/US2011/041070
Filing Date :20/06/2011
(87) International Publication No :WO/2011/163126
(61) Patent of Addition to Application Number :NA
Filing Date :NA
(62) Divisional to Application Number :NA
Filing Date :NA

(71)**Name of Applicant :**
1)NOVARTIS AG
Address of Applicant :Lichtstrasse 35 CH-4056 Basal Switzerland
(72)**Name of Inventor :**
1)LAREDO Walter R.
2)FREEMAN Charles
3)CALLAGHAN Thomas A.

(57) Abstract :
High refractive index copolymers with reduced glistenings are disclosed. The copolymers which are particularly suitable for use as ophthalmic device materials comprise a high molecular weight reactive linear polyethylene glycol component.

No. of Pages : 30 No. of Claims : 19

(12) PATENT APPLICATION PUBLICATION
(19) INDIA
(22) Date of filing of Application :27/11/2012

(21) Application No.2637/MUMNP/2012 A
(43) Publication Date : 31/01/2014

(54) Title of the invention : A CONTINUOUS ROD PUMP DRIVE SYSTEM

(51) International classification :F04B47/02,E21B17/03,E21B17/042
(31) Priority Document No :61/330095
(32) Priority Date :30/04/2010
(33) Name of priority country :U.S.A.
(86) International Application No :PCT/CA2011/050259
Filing Date :29/04/2011
(87) International Publication No :WO 2011/134085
(61) Patent of Addition to Application Number :NA
Filing Date :NA
(62) Divisional to Application Number :NA
Filing Date :NA

(71)**Name of Applicant :**
1)OIL LIFT TECHNOLOGY INC.
Address of Applicant :#37 19 Aero Drive N.E. Calgary Alberta T2E 8Z9 Canada
(72)**Name of Inventor :**
1)HULT Vern A.
2)WIDNEY Mark

(57) Abstract :
In a downhole rod driven pump continuous rod is used to drive the pump. The continuous rod is connected directly to the drive eliminating the need for a polish rod and an uphole coupling. A coupling is used to connect the continuous rod to the pump reducing restrictions in the production annulus and wear on the production tubing. Further clean out tubing can be inserted into the production tubing beside the continuous rod and can extend therein to the pump without restriction. When the coupling is a threaded coupling the continuous rod can be rotated in an appropriate direction to release the continuous rod from the pump when the pump is stuck. When the coupling is a shear coupling the shear coupling can be sheared for releasing the pump from the continuous rod. When the pump is a progressing cavity pump and the coupling is a shear coupling the continuous rod can be reverse rotated for changing the direction of pumping and if the rotor thereafter remains stuck the shear coupling can be sheared.

No. of Pages : 46 No. of Claims : 34

(12) PATENT APPLICATION PUBLICATION
(19) INDIA
(22) Date of filing of Application :06/11/2012
(21) Application No.2526/MUMNP/2012 A
(43) Publication Date : 31/01/2014

(54) Title of the invention : RANDOM PALL RING PACKING ELEMENTS

(51) International classification :B01J19/30,C03C3/089
(31) Priority Document No :10004229.0
(32) Priority Date :21/04/2010
(33) Name of priority country :EPO
(86) International Application No :PCT/EP2011/056352
Filing Date :20/04/2011
(87) International Publication No :WO 2011/131730
(61) Patent of Addition to Application Number :NA
Filing Date :NA
(62) Divisional to Application Number :NA
Filing Date :NA

(71)**Name of Applicant :**
1)DE DIETRICH PROCESS SYSTEMS GMBH
Address of Applicant :Hattenbergstrae 36 55122 Mainz Germany
(72)**Name of Inventor :**
1)DICHTL Gottfried

(57) Abstract :
The invention relates to random Pall ring packing elements (1) in the form of hollow cylinders (2) or semi cylinders in which sections (3) of the cylinder wall are bent inward in a web like manner in the direction of the cylinder axis and which are produced completely from a temperature and chemical resistant glass in particular borosilicate glass 3.3. The packing elements are preferably produced by cutting and deforming starting from glass tubes.

No. of Pages : 20 No. of Claims : 19

(12) PATENT APPLICATION PUBLICATION
(19) INDIA
(22) Date of filing of Application :06/11/2012
(21) Application No.2528/MUMNP/2012 A
(43) Publication Date : 31/01/2014

(54) Title of the invention : METHOD FOR CALCULATING WEIGHT RATIO BY QUALITY GRADE IN GRAIN APPEARANCE QUALITY GRADE DISCRIMINATION DEVICE

(51) International classification	:G01N21/85, G06K9/62
(31) Priority Document No	:2010115425
(32) Priority Date	:19/05/2010
(33) Name of priority country	:Japan
(86) International Application No	:PCT/JP2011/002583
Filing Date	:10/05/2011
(87) International Publication No	:WO 2011/145287
(61) Patent of Addition to Application Number	:NA
Filing Date	:NA
(62) Divisional to Application Number	:NA
Filing Date	:NA

(71)**Name of Applicant :**
1)SATAKE CORPORATION
Address of Applicant :7 2 Sotokanda 4 chome Chiyoda ku Tokyo 1010021 Japan
(72)**Name of Inventor :**
1)ISHIZUKI Hiroki
2)EMORI Takayuki
3)NAKATA Yoshihisa

(57) Abstract :
Disclosed is a method that can accurately calculate a weight ratio even when calculating said weight ratio by quality of grain using a grain appearance quality discrimination device. The method for calculating the weight ratio by quality in a grain appearance quality discrimination device that images grain by means of an imaging means and on the basis of said imaging data discriminates the quality of the grain is characterized by imaging a plurality of grain discriminating the quality of the aforementioned plurality of grain on the basis of said imaging data tallying by quality the number of pixels in the aforementioned imaging data of said plurality of grain of which the quality has been discriminated converting the aforementioned number of pixels to a weight by quality by means of multiplying said number of pixels tallied by quality by a weight conversion factor per pixel that is set by quality ahead of time and calculating the weight ratio by quality of said grain on the basis of said weight by quality.

No. of Pages : 26 No. of Claims : 2

(12) PATENT APPLICATION PUBLICATION
(19) INDIA
(22) Date of filing of Application :27/11/2012
(21) Application No.2640/MUMNP/2012 A
(43) Publication Date : 31/01/2014

(54) Title of the invention : METHOD AND APPARATUS FOR SEARCHING OF CONTENT USING SEMANTIC SYNTHESIS

(51) International classification	:G06F17/27, G06F17/30
(31) Priority Document No	:61/357,512 (US)
(32) Priority Date	:22/06/2010
(33) Name of priority country	:U.S.A.
(86) International Application No	:PCT/CA2011/000718
Filing Date	:22/06/2011
(87) International Publication No	:WO/2011/160204
(61) Patent of Addition to Application Number	:NA
Filing Date	:NA
(62) Divisional to Application Number	:NA
Filing Date	:NA

(71)**Name of Applicant :**
1)Primal Fusion Inc.
Address of Applicant :7 258 King Street N. Waterloo Ontario N2J 2Y9 Canada
(72)**Name of Inventor :**
1)Peter Joseph Sweeney
2)Robert Charles Good
3)Naim Khan

(57) Abstract :
There are disclosed systems and methods for semantic searching. In an embodiment the method may include receiving a first search query obtaining a disambiguation term for semantically disambiguating the first search query and creating with a processor a second search query based at least in part on the first search query and the disambiguation term. The method may also include at least one of outputting search results obtained from a search conducted based at least in part on the second search query and sending the second search query to a search service for outputting search results.

No. of Pages : 66 No. of Claims : 33

(12) PATENT APPLICATION PUBLICATION
(19) INDIA
(22) Date of filing of Application :27/11/2012
(21) Application No.2641/MUMNP/2012 A
(43) Publication Date : 31/01/2014

(54) Title of the invention : SYSTEMS AND METHODS FOR ANALYZING AND SYNTHESIZING COMPLEX KNOWLEDGE REPRESENTATIONS

(51) International classification	:G06F17/30, G06N5/02
(31) Priority Document No	:61/357,266
(32) Priority Date	:22/06/2010
(33) Name of priority country	:U.S.A.
(86) International Application No	:PCT/CA2011/000745
Filing Date	:22/06/2011
(87) International Publication No	:WO/2011/160214
(61) Patent of Addition to Application Number	:NA
Filing Date	:NA
(62) Divisional to Application Number	:NA
Filing Date	:NA

(71)**Name of Applicant :**
1)Primal Fusion Inc.
Address of Applicant :7 258 King Street N. Waterloo Ontario N2J 2Y9 Canada
(72)**Name of Inventor :**
1)Peter Joseph Sweeney
2)Alexander David Black
3)Ihab Francis Ilyas
4)Anne Jude Hunt

(57) Abstract :
Techniques for analyzing and synthesizing complex knowledge representations (KRs) may utilize an atomic knowledge representation model including both an elemental data structure and knowledge processing rules stored as machine-readable data and/or programming instructions. One or more of the knowledge processing rules may be applied to analyze an input complex KR to deconstruct its complex concepts and/or concept relationships to elemental concepts and/or concept relationships to be included in the elemental data structure. One or more of the knowledge processing rules may be applied to synthesize an output complex KR from the stored elemental data structure in accordance with an input context. Multiple input complex KRs of various types may be analyzed and deconstructed to populate the elemental data structure and input complex KRs may be transformed through the elemental data structure to output complex KRs of different types providing semantic interoperability to KRs of different types and/or KR models.

No. of Pages : 77 No. of Claims : 111

(12) PATENT APPLICATION PUBLICATION
(19) INDIA
(22) Date of filing of Application :28/08/2012
(21) Application No.2060/MUMNP/2012 A
(43) Publication Date : 31/01/2014

(54) Title of the invention : COMPOSITION FOR NASAL ADMINISTRATION AND METHOD FOR PREPARING IT

(51) International classification :A61K 38/00,A61K38/22
(31) Priority Document No :2010-065042
(32) Priority Date :19/03/2010
(33) Name of priority country :Japan
(86) International Application No :PCT/JP2011/056625
Filing Date :18/03/2011
(87) International Publication No :WO/2011/115264
(61) Patent of Addition to Application Number :NA
Filing Date :NA
(62) Divisional to Application Number :NA
Filing Date :NA

(71)**Name of Applicant :**
1)Daiichi Sankyo Company Limited
Address of Applicant :3-5-1 Nihonbashi Honcho Chuo-ku Tokyo 103-8426 Japan.
(72)**Name of Inventor :**
1)Masaru Matsumoto
2)Shuji Takeda
3)Kyohei Nobori

(57) Abstract :
Disclosed is a powder composition for transnasal administration, which contains a biologically active peptide and cellulose acetate that serves as a base. The powder composition for transnasal administration has excellent transnasal absorption of the biologically active peptide.

No. of Pages : 38 No. of Claims : 14

(12) PATENT APPLICATION PUBLICATION
(19) INDIA
(22) Date of filing of Application :07/11/2012

(21) Application No.2536/MUMNP/2012 A
(43) Publication Date : 31/01/2014

(54) Title of the invention : OVERMOLDING EXTRUDED PROFILES

(51) International classification	:B29D99/00, B62D29/00, B29C45/14
(31) Priority Document No	:10163774.2 (EP)
(32) Priority Date	:25/05/2010
(33) Name of priority country	:EPO
(86) International Application No	:PCT/EP2011/058563
Filing Date	:25/05/2011
(87) International Publication No	:WO/2011/147872
(61) Patent of Addition to Application Number	:NA
Filing Date	:NA
(62) Divisional to Application Number	:NA
Filing Date	:NA

(71)**Name of Applicant :**
1)SIKA TECHNOLOGY AG
Address of Applicant :Zugerstrasse 50 CH-6340 Baar Switzerland
(72)**Name of Inventor :**
1)BELPAIRE Vincent

(57) Abstract :
A exemplary method of for instance forming a baffle (100) or reinforcer includes extruding an expandable material (110) to have a particular cross-sectional profile inserting the expandable material (110) into a molding tool (135) cutting the expandable material (110) to a predetermined length within the molding tool (135) and overmolding a carrier material (105) onto a portion of the expandable material (110) within the molding tool (135).

No. of Pages : 21 No. of Claims : 15

(12) PATENT APPLICATION PUBLICATION
(19) INDIA
(22) Date of filing of Application :28/11/2012
(21) Application No.2651/MUMNP/2012 A
(43) Publication Date : 31/01/2014

(54) Title of the invention : VIRTUAL TESTING AND INSPECTION OF A VIRTUAL WELDMENT

(51) International classification :G09B19/24
(31) Priority Document No :61/349,029
(32) Priority Date :27/05/2010
(33) Name of priority country :U.S.A.
(86) International Application No :PCT/IB2011/001157
Filing Date :27/05/2011
(87) International Publication No :WO/2011/148258
(61) Patent of Addition to Application Number :NA
Filing Date :NA
(62) Divisional to Application Number :NA
Filing Date :NA

(71)**Name of Applicant :**
1)LINCOLN GLOBAL INC.
Address of Applicant :17721 Railroad Street City of Industry CA 91748 UNITED STATES OF AMERICA
(72)**Name of Inventor :**
1)WALLACE Matthew Wayne
2)PETERS Carl

(57) Abstract :
Arc welding simulations that provide simulation of virtual destructive and non destructive testing and inspection of virtual weldments for training purposes. The virtual testing simulations may be performed on virtual weldments created using a virtual reality welding simulator system (e.g. a virtual reality arc welding (VRAW) system). The virtual inspection simulations may be performed on pre-canned (i.e. pre-defined) virtual weldments or using virtual weldments created using a virtual reality welding simulator system. In general virtual testing may be performed using a virtual reality welding simulator system (e.g. a virtual reality arc welding (VRAW) system) and virtual inspection may be performed using a standalone virtual weldment inspection (VWI) system or using a virtual reality welding simulator system (e.g. a virtual reality arc welding (VRAW) system). However in accordance with certain enhanced embodiments of the present invention virtual testing may also be performed on a standalone VWI system.

No. of Pages : 78 No. of Claims : 15

(12) PATENT APPLICATION PUBLICATION
(19) INDIA
(22) Date of filing of Application :29/11/2012
(21) Application No.2653/MUMNP/2012 A
(43) Publication Date : 31/01/2014

(54) Title of the invention : SYNTHESIS AND ANTICANCER ACTIVITY OF ARYL AND HETEROARYL-QUINOLIN DERIVATIVES

(51) International classification	:A61K31/4741, C07D215/22, C07D215/233,
(31) Priority Document No	:61/364,760
(32) Priority Date	:15/07/2010
(33) Name of priority country	:U.S.A.
(86) International Application No	:PCT/US2011/043985
Filing Date	:14/07/2011
(87) International Publication No	:WO/2012/009519
(61) Patent of Addition to Application Number	:NA
Filing Date	:NA
(62) Divisional to Application Number	:NA
Filing Date	:NA

(71)**Name of Applicant :**
1)TaiRx Inc.
Address of Applicant :7F-5 No. 66 San-Chung Rd. Nankang Business Park Taipei 115 Taiwan Republic of China
(72)**Name of Inventor :**
1)KUO Sheng-Chu
2)LEE Kuo-Hsiung
3)HUANG Li-Jiau
4)CHOU Li-Chen
5)WU Tian-Shung
6)WAY Tzong-Der
7)CHUNG Jing-Gung
8)YANG Jai-Sing
9)HUANG Chi-Hung
10)TSAI Meng-Tung

(57) Abstract :
A class of compounds that are derivatives and analogues of aryl and heteroaryl-quinolin is disclosed. Also disclosed are synthesis and use of the aryl and heteroaryl -quinolin derivatives and analogues for anticancer activities.

No. of Pages : 116 No. of Claims : 20

(12) PATENT APPLICATION PUBLICATION
(19) INDIA
(22) Date of filing of Application :29/11/2012
(21) Application No.2654/MUMNP/2012 A
(43) Publication Date : 31/01/2014

(54) Title of the invention : ELECTRICAL ENERGY STORAGE DEVICE

(51) International classification :H01G 4/33,H01G 4/005
(31) Priority Document No :2010-133453
(32) Priority Date :10/06/2010
(33) Name of priority country :Japan
(86) International Application No :PCT/JP2010/060914
Filing Date :25/06/2010
(87) International Publication No :WO/2011/155078
(61) Patent of Addition to Application Number :NA
Filing Date :NA
(62) Divisional to Application Number :NA
Filing Date :NA

(71)**Name of Applicant :**
1)Kanji SHIMIZU
Address of Applicant :11-1 Imadera Nishi-ku Kobe-shi Hyogo 651-2114 Japan
2)K.S. INTERNATIONAL CO. LTD.
3)ENZO PLANNING CO. LTD.
4)Kazuhiko TAKANASHI
(72)**Name of Inventor :**
1)Kanji SHIMIZU

(57) Abstract :
The invention provides a compact electrical energy storage device which has large capacity and can produce a high electrical energy. In accordance with the electrical energy storage device of the invention the electrical energy storage device 1 comprising a first electrode 4 a dielectric layer 6 and a second electrode 7 is characterized in that between the first electrode 4 and the dielectric layer 6 and between the second electrode 7 and the dielectric layer 6 there is formed an electron collector layer 6 comprising electron collector microparticles 5a made up of metal semiconductor or surface-modified ceramics.

No. of Pages : 23 No. of Claims : 5

(12) PATENT APPLICATION PUBLICATION
(19) INDIA
(22) Date of filing of Application :28/11/2012
(21) Application No.2650/MUMNP/2012 A
(43) Publication Date : 31/01/2014

(54) Title of the invention : COLORED JOINTING ADHESIVE FOR STONE

(51) International classification	:C09J9/00, C09J11/04, C09J11/06,
(31) Priority Document No	:201010201018.X
(32) Priority Date	:08/06/2010
(33) Name of priority country	:China
(86) International Application No	:PCT/CN2011/074041
Filing Date	:13/05/2011
(87) International Publication No	: WO/2011/153893
(61) Patent of Addition to Application Number	:NA
Filing Date	:NA
(62) Divisional to Application Number	:NA
Filing Date	:NA

(71)**Name of Applicant :**
1)WUHAN KEDA MARBLE PROTECTIVE MATERIALS CO. LTD.
Address of Applicant :No.2 Zhangbai Road Dongxihu District Wuhan Hubei 430040 China
(72)**Name of Inventor :**
1)DU Kunwen
2)DU Kunwu

(57) Abstract :
A colored jointing agent for stone is provided which at least comprises 100 parts by weight of air-dried unsaturated polyester resin 0 to 5 parts by weight of hydrogenated castor oil 1 to 20 parts by weight of nano powder 10 to 250 parts by weight of a filler and 1 to 15 parts by weight of an antishrinking agent. It overcomes disadvantages of conventional jointing adhesive made by common marble glue such as low air drying performance low antishrinking capacity low penetrability and the like. The colored jointing agent for stone can be used to fill the gaps between constructional materials such as stones tiles and the like.

No. of Pages : 23 No. of Claims : 13

(12) PATENT APPLICATION PUBLICATION
(19) INDIA
(22) Date of filing of Application :14/12/2012
(21) Application No.2780/MUMNP/2012 A
(43) Publication Date : 31/01/2014

(54) Title of the invention : PARTICLES COMPRISING HYDROPHOBIC POLYMER AND HYDROPHOBIC PHENOLIC COMPOUND

(51) International classification :A23L1/275,A23L1/30,A23L1/305
(31) Priority Document No :10167853.0
(32) Priority Date :30/06/2010
(33) Name of priority country :EPO
(86) International Application No :PCT/EP2011/059502
Filing Date :08/06/2011
(87) International Publication No :WO 2012/000757
(61) Patent of Addition to Application Number :NA
Filing Date :NA
(62) Divisional to Application Number :NA
Filing Date :NA

(71)**Name of Applicant :**
1)HINDUSTAN UNILEVER LIMITED
Address of Applicant :Unilever House B.D. Sawant Marg Chakala Andheri East Mumbai 400 099 Maharashtra India
(72)**Name of Inventor :**
1)PATEL AshokRanchodbhai
2)TIWARI Jyoti Kumar
3)VELIKOV Krassimir Petkov

(57) Abstract :
The present invention has as an objective to provide a composition comprising a hydrophobic phenolic compound selected from the group existing of curcuminoids theaflavins isoflavones and polymethoxylated flavones wherein the phenolic compound has an enhanced water dispersibility and stability against aggregation and sedimentation and enhanced bio availability. These objectives are met by submicron particles containing hydrophobic phenolic compound and a hydrophobic polymer comprising one or more prolamines.

No. of Pages : 30 No. of Claims : 13

(12) PATENT APPLICATION PUBLICATION
(19) INDIA
(22) Date of filing of Application :14/12/2012

(21) Application No.2782/MUMNP/2012 A
(43) Publication Date : 31/01/2014

(54) Title of the invention : METHOD FOR BREWING BEVERAGE AND CARTRIDGE CONTAINING INFUSIBLE MATERIAL

(51) International classification :A47J31/40,B65D85/804
(31) Priority Document No :10169485.9
(32) Priority Date :14/07/2010
(33) Name of priority country :EPO
(86) International Application No :PCT/EP2011/060538
Filing Date :23/06/2011
(87) International Publication No :WO 2012/007257
(61) Patent of Addition to Application Number :NA
Filing Date :NA
(62) Divisional to Application Number :NA
Filing Date :NA

(71)**Name of Applicant :**
1)HINDUSTAN UNILEVER LIMITED
Address of Applicant :Unilever House B.D. Sawant Marg Chakala Andheri East Mumbai 400 099 Maharashtra India
(72)**Name of Inventor :**
1)QUINN Anthony Edward
2)MAFFEI Osvaldo
3)BRONWASSER Robert Wim
4)ZANDONA Raffaele

(57) Abstract :
The present invention provides a method for brewing a beverage in a brewing apparatus wherein a cartridge containing infusible material is connected to a brew chamber and will form the bottom of the brew chamber. By the introduction of air through the filter of the cartridge water and infusible material are mixed and an effective brewing process is conducted. After brewing the beverage is discharged into a receptacle through the filter of the cartridge leaving infusible material behind in the cartridge. The invention also provides a cartridge for use in the method.

No. of Pages : 50 No. of Claims : 15

(12) PATENT APPLICATION PUBLICATION
(19) INDIA
(22) Date of filing of Application :14/12/2012
(21) Application No.2784/MUMNP/2012 A
(43) Publication Date : 31/01/2014

(54) Title of the invention : APPARATUS FOR CHARGING THIN FILM CAPACITOR

(51) International classification :H02J7/00
(31) Priority Document No :NA
(32) Priority Date :NA
(33) Name of priority country :NA
(86) International Application No :PCT/JP2010/061287
Filing Date :01/07/2010
(87) International Publication No :WO/2012/001810
(61) Patent of Addition to Application Number :NA
Filing Date :NA
(62) Divisional to Application Number :NA
Filing Date :NA

(71)**Name of Applicant :**
1)SHIMIZU Kanji
Address of Applicant :11-1 Imadera Nishi-ku Kobe-shi Hyogo 6512114 Japan
(72)**Name of Inventor :**
1)SHIMIZU Kanji

(57) Abstract :
Disclosed is an apparatus for charging thin film capacitors wherein an excess current generated at the time of charging the thin film capacitors is eliminated with a low-cost configuration. The apparatus has: a direct current power supply (DC) which supplies direct currents to a plurality of thin film capacitors; resistors which are connected in series to the thin film capacitors respectively and which limit the current value of the direct currents to be supplied to the thin film capacitors from the direct current power supply (DC); and series-parallel system changeover switches (SW) each of which is connected in series to each thin film capacitor (C) performs switching to series connection by short-circuiting both the ends of each thin film capacitor when one contact is selected and performs switching to parallel connection when the other contact is selected, and supplies a direct current to each thin film capacitor by supplying a direct current to the resistor. At the time of charging each thin film capacitor (C), a current to be supplied to the thin film capacitor is suppressed by resistance by means of parallel connection, and at the time of discharging electricity from the thin film capacitor, electricity is permitted to be discharged by series connection, irrespective of the resistors, by switching a charging operation switch (SW1) and a discharge operation switch (SW2).

No. of Pages : 10 No. of Claims : 1

(12) PATENT APPLICATION PUBLICATION
(19) INDIA
(22) Date of filing of Application :17/12/2012
(21) Application No.2792/MUMNP/2012 A
(43) Publication Date : 31/01/2014

(54) Title of the invention : FLOW FILTER FOR SEPARATING BLOOD INTO PLASMA AND CELLULAR CONSTITUENTS

(51) International classification	:A61M1/34, A61M1/02
(31) Priority Document No	:10 2010 030 238.4
(32) Priority Date	:17/06/2010
(33) Name of priority country	:Germany
(86) International Application No	:PCT/EP2011/060108
Filing Date	:17/06/2011
(87) International Publication No	:WO 2011/157822
(61) Patent of Addition to Application Number	:NA
Filing Date	:NA
(62) Divisional to Application Number	:NA
Filing Date	:NA

(71)**Name of Applicant :**
1)Lmb Lab med Blutbank Technologie GmbH
Address of Applicant :Mslstrae 17 85445 Schwaig Germany
(72)**Name of Inventor :**
1)STUTE Reinhard
2)JENTSCH Klaus

(57) Abstract :
A flow filter for separating blood into plasma and cellular constituents comprises a filter housing which has a blood delivery line a plasma removal line and a cell removal line a fine pore membrane which comprises a bundle of parallel hollow fibres arranged in the filter housing has an inflow end connected to the blood delivery line and which divides the filter housing into a first flow chamber that is connected to the cell removal line and a second flow chamber that is connected to the plasma removal line. The filter also comprises a pressure adjusting device for adjusting the pressure in the hollow fibres said device being connected to an outflow end of the bundle.

No. of Pages : 16 No. of Claims : 12

(12) PATENT APPLICATION PUBLICATION
(19) INDIA
(22) Date of filing of Application :17/12/2012
(21) Application No.2793/MUMNP/2012 A
(43) Publication Date : 31/01/2014

(54) Title of the invention : BACTERIAL INJECTION IN SUGARCANE

(51) International classification :A01N63/00,A01G7/06
(31) Priority Document No :61/346963
(32) Priority Date :21/05/2010
(33) Name of priority country :U.S.A.
(86) International Application No :PCT/EP2011/058270
Filing Date :20/05/2011
(87) International Publication No :WO 2011/144741
(61) Patent of Addition to Application Number :NA
Filing Date :NA
(62) Divisional to Application Number :NA
Filing Date :NA

(71)**Name of Applicant :**
1)SYNGENTA PARTICIPATIONS AG
Address of Applicant :Schwarzwaldallee 215 CH 4058 Basel Switzerland
(72)**Name of Inventor :**
1)MARTINHO Leandro
2)MOREIRA Murlio
3)CLAUDIONIR Jose

(57) Abstract :
Methods of treating sugarcane methods of growing sugarcane and sugarcane propagation systems are shown and described. In one example a method of treating includes injecting a mixture including nitrogen fixing bacteria into a stem section.

No. of Pages : 20 No. of Claims : 67

(12) PATENT APPLICATION PUBLICATION
(19) INDIA
(22) Date of filing of Application :17/12/2012
(21) Application No.2794/MUMNP/2012 A
(43) Publication Date : 31/01/2014

(54) Title of the invention : AUTOMATED SYSTEM FOR ANALYZING PHYTOTOXICITY

(51) International classification :A01B79/00,A01G7/00
(31) Priority Document No :61/349018
(32) Priority Date :27/05/2010
(33) Name of priority country :U.S.A.
(86) International Application No :PCT/EP2011/052531
Filing Date :21/02/2011
(87) International Publication No :WO 2011/147596
(61) Patent of Addition to Application Number :NA
Filing Date :NA
(62) Divisional to Application Number :NA
Filing Date :NA

(71)**Name of Applicant :**
1)Syngenta Participations AG
Address of Applicant :Schwarzwaldallee 215 CH 4058 Basel Switzerland
(72)**Name of Inventor :**
1)STACHON Walt
2)TERPSTRA Karolyn

(57) Abstract :
A system for evaluating the phytotoxicity and/or injury of plants is described. Plants are planted in row sections and a cart is used to pass a radiometric sensor over the row sections. The cart has a radiometric sensor assembly positioned above the row section. Each sensor assembly generates a data signal and a computer receives and stores the data signals. The field cart is positioned above the row sections and measures the existence of plants in the row section and the quantity of vegetation in the row section.

No. of Pages : 42 No. of Claims : 17

(12) PATENT APPLICATION PUBLICATION
(19) INDIA
(22) Date of filing of Application :17/12/2012
(21) Application No.2795/MUMNP/2012 A
(43) Publication Date : 31/01/2014

(54) Title of the invention : THIN-FILM CAPACITOR DISCHARGING APPARATUS

(51) International classification :H02J7/00
(31) Priority Document No :NA
(32) Priority Date :NA
(33) Name of priority country :NA
(86) International Application No :PCT/JP2010/061288
Filing Date :01/07/2010
(87) International Publication No :WO/2012/001811
(61) Patent of Addition to Application Number :NA
Filing Date :NA
(62) Divisional to Application Number :NA
Filing Date :NA

(71)**Name of Applicant :**
1)Kanji SHIMIZU
Address of Applicant :11-1, Imadera, Nishi-ku, Kobe-shi, Hyogo, 651-2114, Japan
(72)**Name of Inventor :**
1)Kanji SHIMIZU

(57) Abstract :
The invention provides a thin-film capacitor discharging apparatus with an inexpensive configuration that can stably produce a constant voltage upon discharging a thin-film capacitor. The thin-film capacitor discharging apparatus is featured by discharging a thin-film capacitor for use in a direct current circuit, and including a discharging function serving as a hybrid such that direct current is received from the thin-film capacitor with voltage becoming lowered to temporarily store electric charge to supply the direct current to a DC/DC inverter while a basic voltage remains until the thin-film capacitor becomes completely empty of electric charge.

No. of Pages : 9 No. of Claims : 1

(12) PATENT APPLICATION PUBLICATION
(19) INDIA
(22) Date of filing of Application :18/12/2012
(21) Application No.2797/MUMNP/2012 A
(43) Publication Date : 31/01/2014

(54) Title of the invention : COMBINED CYCLE POWER GENERATOR

(51) International classification :F01D25/12,F01D25/24,F01K23/10
(31) Priority Document No :2010159304
(32) Priority Date :14/07/2010
(33) Name of priority country :Japan
(86) International Application No :PCT/JP2011/061111
Filing Date :13/05/2011
(87) International Publication No :WO 2012/008213
(61) Patent of Addition to Application Number :NA
Filing Date :NA
(62) Divisional to Application Number :NA
Filing Date :NA

(71)**Name of Applicant :**
1)MITSUBISHI HEAVY INDUSTRIES LTD.
Address of Applicant :16 5 Konan 2 chome Minato ku Tokyo 1088215 Japan
(72)**Name of Inventor :**
1)MARUYAMA Takashi

(57) Abstract :
Disclosed is a combined cycle power generator that reheats steam discharged from a high pressure chamber of a steam turbine with the waste heat of a gas turbine introduces said steam to a mid pressure chamber thereby driving the steam turbine. Cooling steam which is hotter than the steam discharged from the high pressure chamber and which has cooled the gas turbine is cooled after being introduced to the mid pressure chamber from a cooling steam inlet which is separate to a reheated steam inlet to which the reheated steam that was reheated with the waste heat of the gas turbine is introduced.

No. of Pages : 34 No. of Claims : 4

(12) PATENT APPLICATION PUBLICATION
(19) INDIA
(22) Date of filing of Application :18/12/2012
(21) Application No.2800/MUMNP/2012 A
(43) Publication Date : 31/01/2014

(54) Title of the invention : DRAFTING DEVICE FOR SPINNING MACHINERY

(51) International classification :D01H5/22,D01H5/44
(31) Priority Document No :10 007018.4
(32) Priority Date :07/07/2010
(33) Name of priority country :EPO
(86) International Application No :PCT/EP2011/003350
Filing Date :06/07/2011
(87) International Publication No :WO/2012/003972
(61) Patent of Addition to Application Number :NA
Filing Date :NA
(62) Divisional to Application Number :NA
Filing Date :NA

(71)**Name of Applicant :**
1)VANTEX TECHNOLOGIES GMBH
Address of Applicant :Miesingstr. 11 83727 Schliersee Germany
(72)**Name of Inventor :**
1)Umberto MICHELETTI

(57) Abstract :
Drafting device (10) for use in spinning machinery and for drafting discontinuous fibers, such as cotton, linen, wool, jute, ramie, hemp or man-made fibers, with a pair of feed rollers (2), a pair of draft rollers (3), a pair of control rollers (4) and a pair of delivery rollers (5), being arranged in this order in a rove feed direction (F) defining a drafting zone (D) composed of three sub-drafting zones (A, B, C), whereby the rollers (2, 3, 4) are driven at a respective predetermined speed in such a manner that a drafting action is exerted on the rove (1), wherein said control rollers (4) are both provided with an active drive mechanism and said control rollers (4) are mounted in a fixed but contact-free manner with a defined control gap (6) between them of a predetermined dimension.

No. of Pages : 21 No. of Claims : 14

(12) PATENT APPLICATION PUBLICATION
(19) INDIA
(22) Date of filing of Application :18/12/2012
(21) Application No.2801/MUMNP/2012 A
(43) Publication Date : 31/01/2014

(54) Title of the invention : GUIDE MECHANISM OF ANCHOR CHAIN FOR CONVEYING LADLE

(51) International classification	:B65G21/22, B65G17/10
(31) Priority Document No	:2010-143803
(32) Priority Date	:24/06/2010
(33) Name of priority country	:Japan
(86) International Application No	:PCT/JP2010/063558
Filing Date	:10/08/2010
(87) International Publication No	:WO/2011/161836
(61) Patent of Addition to Application Number	:NA
Filing Date	:NA
(62) Divisional to Application Number	:NA
Filing Date	:NA

(71)**Name of Applicant :**
1)DENKI KAGAKU KOGYO KABUSHIKI KAISHA
Address of Applicant :1-1,Nihonbashi-Muromachi 2-chome,Chuo-ku, Tokyo 1038338, Japan
(72)**Name of Inventor :**
1)TANIMURA,Kyoichi
2)KAMAMOTO,Junpei
3)SAGAWA,Masanori
4)NANASAWA,Takashi

(57) Abstract :
There is provided a guide mechanism of an anchor chain for conveying ladles, which can prevent an anchor chain from being twisted or sagged and can transmit motive power to the anchor chain reliably and efficiently. A linear anchor chain guide 30 is provided in a motive power transmission region where the motive power is transmitted from a conveyer chain 21 to the anchor chain 10, and the anchor chain 10 is introduced and guided to the anchor chain guide 30. The guide side parts 32 in the left and right guide half members 31, 31 constituting the anchor chain guide 30 can limit a leftward or rightward movement of the anchor chain 10. The guide upper parts 33 can limit an upward movement of the anchor chain 10.

No. of Pages : 15 No. of Claims : 2

(12) PATENT APPLICATION PUBLICATION
(19) INDIA
(22) Date of filing of Application :18/12/2012
(21) Application No.2804/MUMNP/2012 A
(43) Publication Date : 31/01/2014

(54) Title of the invention : METHOD FOR MANUFACTURING GRAIN ORIENTED ELECTRICAL STEEL SHEET

(51) International classification :C21D8/12,B21B3/02
(31) Priority Document No :2010-150152
(32) Priority Date :30/06/2010
(33) Name of priority country :Japan
(86) International Application No :PCT/JP2011/003724
Filing Date :29/06/2011
(87) International Publication No :WO/2012/001971
(61) Patent of Addition to Application Number :NA
Filing Date :NA
(62) Divisional to Application Number :NA
Filing Date :NA

(71)**Name of Applicant :**
1)JFE STEEL CORPORATION
Address of Applicant :2-3 Uchisaiwai-cho 2-chome Chiyoda-ku Tokyo 1000011 Japan.
(72)**Name of Inventor :**
1)YAMAGUCHI Hiroi
2)OKABE Seiji
3)SENDA Kunihiro
4)OMURA Takeshi

(57) Abstract :
According to the present invention iron loss of a grain oriented electrical steel sheet can be reduced as compared with the prior art by: controllably setting coating weight and the average grain size of forsterite coating formed on a surface of the steel sheet during final annealing in manufacturing processes of the steel sheet to be at least 4.0 g/m2 and 0.9 m or less respectively; setting magnetic flux density B8 of the steel sheet to be at least 1.91T; and linearly and iteratively irradiating the steel sheet with a laser beam having wavelength of 0.2 m to 0.9 m in a direction intersecting the rolling direction of the steel sheet.

No. of Pages : 18 No. of Claims : 5

(12) PATENT APPLICATION PUBLICATION
(19) INDIA
(22) Date of filing of Application :18/12/2012
(21) Application No.2805/MUMNP/2012 A
(43) Publication Date : 31/01/2014

(54) Title of the invention : CURRENT COLLECTOR HAVING BUILT-IN SEALING MEANS, AND BIPOLAR BATTERY INCLUDING SUCH A COLLECTOR

(51) International classification :H01M2/26,H01M10/0525
(31) Priority Document No :10 54773
(32) Priority Date :16/06/2010
(33) Name of priority country :France
(86) International Application No :PCT/EP2011/059943
Filing Date :15/06/2011
(87) International Publication No :WO/2011/157751
(61) Patent of Addition to Application Number :NA
Filing Date :NA
(62) Divisional to Application Number :NA
Filing Date :NA

(71)**Name of Applicant :**
1)Commissariat Lnergie Atomique et aux nergies alternatives
Address of Applicant :25 rue Leblanc Btiment Le Ponant D 75015 PARIS FRANCE.
(72)**Name of Inventor :**
1)CHAMI Marianne

(57) Abstract :
The invention relates to lithium bipolar batteries. According to the invention to improve the sealing against electrolytes between adjacent electrochemical cells novel mixed current collector-electrode supports are produced in the form of a metal grate (101) or raised metal sheet housed in a strip (100) made of electrical insulator material the function of the periphery of which is to constitute the sealing area.

No. of Pages : 35 No. of Claims : 21

(12) PATENT APPLICATION PUBLICATION
(19) INDIA
(22) Date of filing of Application :29/08/2012
(21) Application No.2065/MUMNP/2012 A
(43) Publication Date : 31/01/2014

(54) Title of the invention : CYCLOPROPANECARBOXYLIC ACID DERIVATIVE

(51) International classification :C07D 401/04
(31) Priority Document No :2010-062156
(32) Priority Date :18/03/2010
(33) Name of priority country :Japan
(86) International Application No :PCT/JP2011/055954
Filing Date :14/03/2011
(87) International Publication No :WO/2011/115065
(61) Patent of Addition to Application Number :NA
Filing Date :NA
(62) Divisional to Application Number :NA
Filing Date :NA

(71)**Name of Applicant :**
1)Daiichi Sankyo Company Limited
Address of Applicant :3-5-1 Nihonbashi Honcho Chuo-ku Tokyo 103-8426 Japan.
(72)**Name of Inventor :**
1)NAGATA Tsutomu
2)KOBAYASHI Jun
3)ONISHI Yoshiyuki
4)KISHIDA Masamichi
5)NOGUCHI Kengo

(57) Abstract :
Compounds represented by general formula (I) (wherein R represents a C1-6 alkyl group optionally substituted by 1-3 substituents selected from substituent group A, which consists of hydroxy groups, halogcno groups, cyano groups, nitro groups, amino groups, carboxy groups and C1-3 alkyl groups; R2, R3 and R8 each individually represents a hydrogen atom or a C1-3 alkyl group; R4, R5, R6, R7, R9 and R10 each individually represents a hydrogen atom or the like; and R11 represents a hydrogen atom or the like) and pharmacologically-acceptable salts thereof exhibit a TAFIa-inhibiting activity, and thus arc useful as therapeutic drugs for myocardial infarction, angina, acute coronary syndrome, cerebral infarction, dccp vcin thrombosis, pulmonary embolism, etc.

No. of Pages : 353 No. of Claims : 39

(12) PATENT APPLICATION PUBLICATION
(19) INDIA
(22) Date of filing of Application :10/11/2012
(21) Application No.2548/MUMNP/2012 A
(43) Publication Date : 31/01/2014

(54) Title of the invention : DEVICE FOR ALIGNING AND CONVEYING ARTICLES

(51) International classification	:B65G47/08,B65G 17/00
(31) Priority Document No	:2010-166032
(32) Priority Date	:23/07/2010
(33) Name of priority country	:Japan
(86) International Application No	:PCT/JP2011/064431
Filing Date	:23/06/2011
(87) International Publication No	:WO/2012/011360
(61) Patent of Addition to Application Number	:NA
Filing Date	:NA
(62) Divisional to Application Number	:NA
Filing Date	:NA

(71)**Name of Applicant :**
1)ZUIKO CORPORATION
Address of Applicant :15-21 Minamibefu-cho Settu-Shi Osaka 5660045 Japan
(72)**Name of Inventor :**
1)FUJITA Yukihiko

(57) Abstract :
A device for aligning and transferring articles including: a counter 3 for aligning at a gathering position P an article set W composed of a predetermined number of uncompressed articles; a discharger 4 for discharging the article set W aligned at the gathering position P to a receiving position P0; and at least one transfer bed for supporting a bottom surface of the article set W and reciprocating between the receiving position P0 and a hand-over position P1 P2 thereby receiving the article set W at the receiving position P0 transferring the article set W to the hand-over position P1 P2 and returning to the receiving position P0. The transfer bed L1 R1 and the second support section 20 for compressing the article set W are driven by first and second motors respectively.

No. of Pages : 47 No. of Claims : 7

(12) PATENT APPLICATION PUBLICATION
(19) INDIA
(22) Date of filing of Application :30/11/2012
(21) Application No.2663/MUMNP/2012 A
(43) Publication Date : 31/01/2014

(54) Title of the invention : METHOD OF USING A BYPASS VALVE

(51) International classification :F02B39/02
(31) Priority Document No :61/359,860 (US)
(32) Priority Date :30/06/2010
(33) Name of priority country :U.S.A.
(86) International Application No :PCT/US2011/041990
Filing Date :27/06/2011
(87) International Publication No :WO/2012/012116
(61) Patent of Addition to Application Number :NA
Filing Date :NA
(62) Divisional to Application Number :NA
Filing Date :NA

(71)**Name of Applicant :**
1)Orbital Traction Ltd.
Address of Applicant :8760 Westpark Drive Houston TX 77063 UNITED STATES OF AMERICA
(72)**Name of Inventor :**
1)Roy Venton-Walters
2)Michael P. Bujold

(57) Abstract :
A method of controlling a pump (43) including operating an engine (23) having an engine intake (49) coupled to a pump output (51) of a pump and a transmission (41)coupled to the engine and to the pump and operating a valve (58) between a pump input of the pump and the engine intake such that the valve can be opened during a ratio change of the transmission.

No. of Pages : 44 No. of Claims : 10

(12) PATENT APPLICATION PUBLICATION
(19) INDIA
(22) Date of filing of Application :30/11/2012
(21) Application No.2666/MUMNP/2012 A
(43) Publication Date : 31/01/2014

(54) Title of the invention : MULTIPLE PURPOSE EATING UTENSIL ASSEMBLY

(51) International classification :A47G21/02
(31) Priority Document No :1007437.5
(32) Priority Date :01/05/2010
(33) Name of priority country :U.K.
(86) International Application No :PCT/US2011/000764
Filing Date :02/05/2011
(87) International Publication No :WO 2011/139353
(61) Patent of Addition to Application Number :NA
Filing Date :NA
(62) Divisional to Application Number :NA
Filing Date :NA

(71)**Name of Applicant :**
1)FAZAL Fatima
Address of Applicant :266 Elizabeth Street Unit 5 New York NY 10012 U.S.A.
(72)**Name of Inventor :**
1)FAZAL Fatima

(57) Abstract :
A multi purpose device assembly for eating and for non eating purposes. In addition to having the functionality of an eating utensil the device is generally or nearly flattened or planar to accommodate non eating functions that would otherwise be difficult or impossible using an eating utensil according to a conventional configuration.

No. of Pages : 17 No. of Claims : 11

(12) PATENT APPLICATION PUBLICATION
(19) INDIA
(22) Date of filing of Application :19/12/2012
(21) Application No.2810/MUMNP/2012 A
(43) Publication Date : 31/01/2014

(54) Title of the invention : CHARGING APPARATUS FOR ELECTRIC VEHICLE

(51) International classification :H02J7/00,H02G11/00
(31) Priority Document No :2010156909
(32) Priority Date :09/07/2010
(33) Name of priority country :Japan
(86) International Application No :PCT/JP2011/065030
Filing Date :30/06/2011
(87) International Publication No :WO 2012/005160
(61) Patent of Addition to Application Number :NA
Filing Date :NA
(62) Divisional to Application Number :NA
Filing Date :NA

(71)**Name of Applicant :**
1)ALPHA CORPORATION
Address of Applicant :6 8 Fukuura 1 chome Kanazawa ku Yokohama shi Kanagawa 2360004 Japan
(72)**Name of Inventor :**
1)NAKAMURA Makoto
2)NAKAMURA Shuuji

(57) Abstract :
Disclosed is a recharging device for an electric vehicle that may comprise: a recharging cable (4) which includes a base end connected to a device main body (1) a connector (2) disposed at the tip thereof; and absorption section (3) with excess length; a measurement unit (5) configured so as to detect extensions from the initial length of the recharging cable (4); and a power supply control unit (6) configured to start supply of power to the recharging cable (4) on the condition that an extension that exceeds the threshold value for the recharging cable (4) has been detected by the measurement unit (5).

No. of Pages : 25 No. of Claims : 9

(12) PATENT APPLICATION PUBLICATION
(19) INDIA
(22) Date of filing of Application :21/08/2012
(21) Application No.2433/MUM/2012 A
(43) Publication Date : 31/01/2014

(54) Title of the invention : BOOM ASSEMBLY JOINTS

(51) International classification :B05B1/20
(31) Priority Document No :13/228539
(32) Priority Date :09/09/2011
(33) Name of priority country :U.S.A.
(86) International Application No :NA
Filing Date :NA
(87) International Publication No : NA
(61) Patent of Addition to Application Number :NA
Filing Date :NA
(62) Divisional to Application Number :NA
Filing Date :NA

(71)**Name of Applicant :**
1)DEERE & COMPANY
Address of Applicant :ONE JOHN DEERE PLACE, MOLINE, LLLINOIS, 61265-8098, U.S.A.
(72)**Name of Inventor :**
1)MARK E. BARKER
2)ROGER E. DANIELS
3)RICHARD M. HUMPAL

(57) Abstract :
A boom structure for a mobile agricultural implement. The boom structure includes a first transversely extending beam member having a first protrusion. The boom structure includes a second transversely extending beam member having a second protrusion. The second transversely extending beam member is spatially offset from the first transversely extending beam member. A plurality of first coupling members are coupled to the first protrusion and a plurality of second coupling members coupled to the second protrusion. A plurality of connecting members are coupled to the first and second coupling members to connect the first and second fransyerseJy extending beam members,

No. of Pages : 17 No. of Claims : 27

(12) PATENT APPLICATION PUBLICATION
(19) INDIA
(22) Date of filing of Application :22/08/2012
(21) Application No.2437/MUM/2012 A
(43) Publication Date : 31/01/2014

(54) Title of the invention : THREAD TENSILE FORCE SENSOR

(51) International classification	:G01G21/28, G01L1/04, G01G3/12
(31) Priority Document No	:102011112012.6
(32) Priority Date	:30/08/2011
(33) Name of priority country	:Germany
(86) International Application No	:NA
Filing Date	:NA
(87) International Publication No	: NA
(61) Patent of Addition to Application Number	:NA
Filing Date	:NA
(62) Divisional to Application Number	:NA
Filing Date	:NA

(71)**Name of Applicant :**
1)OERLIKON TEXTILE GMBH & CO. KG
Address of Applicant :LEVERKUSER STRASSE 65, D-42897 REMSCHEID, Germany
(72)**Name of Inventor :**
1)PETER HENNIG
2)MICHAEL IDING
3)FRANK LOEWENFOSS

(57) Abstract :
The present invention relates to a thread tensile force sensor (1) for measuring the thread tensile force of a running thread, comprising a rod-shaped force transmission -element (2) with a first end, which has an operative connection to the running thread, guide means (3, 4), which guide the rod-shaped force transmission element (2) in its movement in the direction oi its longitudinal axis transverse to the running direction of the thread/ measuring means (9), which have an operative connection to the second end of the rod-shaped force transmission element (2), receiving means (7, 8) to receive the measuring means and a housing (11), in which the rod-shaped force transmission element (2), the guide means (3,4), the measuring means (9) and the receiving means (7, 8) are arranged. According to the invention the thread tensile force sensor (1) comprises holding means (6) to hold the guide means (3, 4), the holding means (6) are fastened to the housing (11) and the receiving means (7,8) are only held by a rigid connection to the holding means (6).

No. of Pages : 13 No. of Claims : 17

(12) PATENT APPLICATION PUBLICATION
(19) INDIA
(22) Date of filing of Application :20/12/2012
(21) Application No.2817/MUMNP/2012 A
(43) Publication Date : 31/01/2014

(54) Title of the invention : ACCESS CONTROL SYSTEM FOR A GATE OR A DOOR

(51) International classification :G07C9/00
(31) Priority Document No :20 2010 011 390.3
(32) Priority Date :14/08/2010
(33) Name of priority country :Germany
(86) International Application No :PCT/EP2011/003425
Filing Date :08/07/2011
(87) International Publication No :WO 2012/022398
(61) Patent of Addition to Application Number :NA
Filing Date :NA
(62) Divisional to Application Number :NA
Filing Date :NA

(71)**Name of Applicant :**
1)SOMMER ANTRIEBS UND FUNKTECHNIK GMBH
Address of Applicant :Hans Bckler Str. 21 27 73230 Kirchheim/Teck Germany
(72)**Name of Inventor :**
1)SCHAAF Gerd

(57) Abstract :
The access control system (1) according to the invention for a gate or a door comprises a fingerprint sensor (4) a scanner (5) for capturing a fingerprint as a user identifier for a user a sensor element (6) for activating the scanner (5) and a computer unit (7) which stores a number of user identifiers. A fingerprint captured using the scanner (5) is compared as a currently input user identifier with the user identifiers which are stored in the computer unit (7). If there is a match between the currently input user identifier and a stored user identifier the fingerprint sensor (4) outputs a control signal to a control unit (3) as a result of which the latter operates the gate or the door. Signals generated in the scanner (5) are used to selectively call individual memory locations in the computer unit (7) in order to erase or store individual user identifiers therein.

No. of Pages : 18 No. of Claims : 14

(12) PATENT APPLICATION PUBLICATION
(19) INDIA
(22) Date of filing of Application :20/12/2012
(21) Application No.2818/MUMNP/2012 A
(43) Publication Date : 31/01/2014

(54) Title of the invention : ASPHALT PAVEMENT CONSTRUCTING MACHINE AND METHOD OF OPERATION

(51) International classification :E01C19/38
(31) Priority Document No :NA
(32) Priority Date :NA
(33) Name of priority country :NA
(86) International Application No :PCT/US2011/032970
Filing Date :19/04/2011
(87) International Publication No :WO 2012/144986
(61) Patent of Addition to Application Number :NA
Filing Date :NA
(62) Divisional to Application Number :NA
Filing Date :NA

(71)**Name of Applicant :**
1)VOLVO CONSTRUCTION EQUIPMENT AB
Address of Applicant :SE 631 85 Eskilstuna Sweden
(72)**Name of Inventor :**
1)HAUPT John R.
2)MACDONALD Michael P.

(57) Abstract :
The present invention relates to an asphalt pavement constructing machine and a method for operating an asphalt pavement constructing machine provided with an asphalt compacting surface for compacting asphalt mix on a paving surface during an asphalt pavement formation operation. At least one exciter is provided that vibrates the compacting surface at one or more frequencies selected to prevent the asphalt mix from adhering to the compacting surface.

No. of Pages : 16 No. of Claims : 12

(12) PATENT APPLICATION PUBLICATION
(19) INDIA
(22) Date of filing of Application :21/08/2012
(21) Application No.2001/MUMNP/2012 A
(43) Publication Date : 31/01/2014

(54) Title of the invention : MICRON GAP THERMAL PHOTOVOLTAIC LARGE SCALE SUB MICRON GAP METHOD AND APPARATUS

(51) International classification :H01L35/00
(31) Priority Document No :61/308972
(32) Priority Date :28/02/2010
(33) Name of priority country :U.S.A.
(86) International Application No :PCT/US2011/026544
Filing Date :28/02/2011
(87) International Publication No :WO 2012/108887
(61) Patent of Addition to Application Number :NA
Filing Date :NA
(62) Divisional to Application Number :NA
Filing Date :NA

(71)**Name of Applicant :**
1)MTPV POWER CORPORATION
Address of Applicant :13915 Burnet Road Suite 420 Austin TX 78728 U.S.A.
(72)**Name of Inventor :**
1)BROWN Eric L.
2)DIMATTEO Robert S.
3)NARDELLI Bruno A.
4)PENG Bin
5)LI Xiao

(57) Abstract :
The present invention relates to micron gap thermal photovoltaic (MTPV) technology for the solid state conversion of heat to electricity. The problem is forming and then maintaining the close spacing between two bodies at a sub micron gap in order to maintain enhanced performance. While it is possible to obtain the sub micron gap spacing the thermal effects on the hot and cold surfaces induce cupping warping or deformation of the elements resulting in variations in gap spacing thereby resulting in uncontrollable variances in the power output. A major aspect of the design is to allow for intimate contact of the emitter chips to the shell inside surface so that there is good heat transfer. The photovoltaic ceils are pushed outward against the emitter chips in order to press them against the inner wail. A high temperature thermal interface material improves the heat transfer between the shell inner surface and the emitter chip.

No. of Pages : 34 No. of Claims : 25

(12) PATENT APPLICATION PUBLICATION
(19) INDIA
(22) Date of filing of Application :26/09/2012
(21) Application No.2271/MUMNP/2012 A
(43) Publication Date : 31/01/2014

(54) Title of the invention : SECURING METHOD AND SECURING APPARATUS FOR BEARING HOUSING

(51) International classification :F01D25/16,F01D25/00,F01D25/24
(31) Priority Document No :2010161998
(32) Priority Date :16/07/2010
(33) Name of priority country :Japan
(86) International Application No :PCT/JP2011/065229
Filing Date :01/07/2011
(87) International Publication No :WO 2012/008322
(61) Patent of Addition to Application Number :NA
Filing Date :NA
(62) Divisional to Application Number :NA
Filing Date :NA

(71)**Name of Applicant :**
1)MITSUBISHI HEAVY INDUSTRIES LTD.
Address of Applicant :16 5 Konan 2 chome Minato ku Tokyo 1088215 Japan
(72)**Name of Inventor :**
1)ADACHI Mitsuhiro
2)SHIMADA Masamitsu
3)KOBAYASHI Yasuhiro

(57) Abstract :
Disclosed are a method and an apparatus for affixing a bearing box wherein in order to affix high pressure or low pressure steam turbine casings (LP1 LP2 HP) in storage spaces (S to S) provided in a concrete mount (12) so that the steam turbine casings do not move in a direction (arrow a direction) perpendicular to the direction of a rotor shaft a cubic block (16) from which transverse anchors (20a 20b) are upward projected is provided and concrete is casted into a concrete introduction space of the cubic block (16) to affix the cubic block (16) in the concrete mount (12).

No. of Pages : 36 No. of Claims : 8

(12) PATENT APPLICATION PUBLICATION
(19) INDIA
(22) Date of filing of Application :08/08/2012
(21) Application No.2273/MUM/2012 A
(43) Publication Date : 31/01/2014

(54) Title of the invention : MULTI-PUMP SYSTEM WITH PUMP-FLOW DIVERSION

(51) International classification	:F15B11/08, F15B13/00
(31) Priority Document No	:13/240,789
(32) Priority Date	:22/09/2011
(33) Name of priority country	:U.S.A.
(86) International Application No	:NA
Filing Date	:NA
(87) International Publication No	: NA
(61) Patent of Addition to Application Number	:NA
Filing Date	:NA
(62) Divisional to Application Number	:NA
Filing Date	:NA

(71)**Name of Applicant :**
1)DEERE & COMPANY
Address of Applicant :ONE JOHN DEERE PLACE, MOLINE, LLLINOIS, 61265-8098, U.S.A.
(72)**Name of Inventor :**
1)ANDERSON MARK D
2)MCWETHY ERIK W

(57) Abstract :
A work vehicle has a pump group with two fixed-displacement pumps, an electro-hydraulic diverter openable to divert flow from one of the pumps to a fluid reservoir, and a controller configured to command the diverter to open.

No. of Pages : 38 No. of Claims : 19

(12) PATENT APPLICATION PUBLICATION
(19) INDIA
(22) Date of filing of Application :26/09/2012
(21) Application No.2273/MUMNP/2012 A
(43) Publication Date : 31/01/2014

(54) Title of the invention : STEAM VALVE

(51) International classification :F01D17/10
(31) Priority Document No :2010126845
(32) Priority Date :02/06/2010
(33) Name of priority country :Japan
(86) International Application No :PCT/JP2011/062510
Filing Date :31/05/2011
(87) International Publication No :WO 2011/152409
(61) Patent of Addition to Application Number :NA
Filing Date :NA
(62) Divisional to Application Number :NA
Filing Date :NA

(71)**Name of Applicant :**
1)MITSUBISHI HEAVY INDUSTRIES LTD.
Address of Applicant :16 5 Konan 2 chome Minato ku Tokyo 1088215 Japan
(72)**Name of Inventor :**
1)NISHIMURA Toshinari

(57) Abstract :
A steam valve (1) varies the area of a flow path between a valve seat (4) and a valve body (2) by moving the valve body (2) relative to the valve seat (4) in order to regulate the amount of steam flowing in the flow path. The valve body (2) is constructed in such a way that if r is the radius of curvature of a valve head section (2A) thereof which comes into contact with the valve seat (4) and D is the seat diameter of the valve seat (4) then r > 0.6D is satisfied. The valve body (2) comprises upstream of the valve head section (2A) a tapered surface (2B) which is inclined further towards the relative movement direction (22) of the valve body (2) with respect to the valve seat (4) than the valve head section (2A)

No. of Pages : 33 No. of Claims : 6

(12) PATENT APPLICATION PUBLICATION
(19) INDIA
(22) Date of filing of Application :09/04/2012
(21) Application No.880/MUMNP/2012 A
(43) Publication Date : 31/01/2014

(54) Title of the invention : PRESSED LAMINAR SHEET COMPRISING A RETICULAR ROOT MAT AND ADHESIVE, METHOD THEREOF AND WOOD-LIKE PANEL MADE USING SAID LAMINAR SHEET

(51) International classification :B27N3/04
(31) Priority Document No :1830-2009
(32) Priority Date :08/09/2009
(33) Name of priority country :Chile
(86) International Application No :PCT/CL2009/000017
Filing Date :21/10/2009
(87) International Publication No :WO/2011/029210
(61) Patent of Addition to Application Number :NA
Filing Date :NA
(62) Divisional to Application Number :NA
Filing Date :NA

(71)**Name of Applicant :**
1)ZUNIGA BRAVO, IGNACIO PATRICIO
Address of Applicant :CAMINO OTONAL NRO. 1452, LAS CONDES 7591296 SANTIAGO, CHILE
2)GARCIA CASTELBLANCO, ROBERTO
(72)**Name of Inventor :**
1)ZUNIGA BRAVO, IGNACIO PATRICIO
2)GARCIA CASTELBLANCO, ROBERTO

(57) Abstract :
The invention relates to a pressed laminar radicle sheet comprising an extended layer of a reticular mat, originating from a hydroponic seed culture, and sufficient adhesive to form the laminar sheet. The method for the production of said laminar sheet comprises: a) selecting, disinfecting, steeping, airing, sowing and germinating the seeds; b) producing a reticular component formed by a root mat and a low percentage of ungerminated seeds, as well as a leaf component; c) cutting back the leaf growth, leaving only 1 to 1.5 cm height; d) allowing further leaf growth; e) cutting the leaf growth back again, leaving only 1 to 1.5 cm; f) draining, drying and weighing and measuring the reticular mat; g) forming the unpressed laminar sheet, adding the adhesive to the reticular mat and pressing said mat with adhesive in a cold press; and h) pressing the unpressed laminar sheet with a hot press and leaving said laminar sheet to rest in the cold press. In addition, the invention relates to: the use of the laminar sheet as a substitute for wood in the production of panels, boards, laminar sheets or similar wood-based products; a panel similar to a chipboard panel and the method for the production thereof, said panel comprising the laminar sheet, at least a second layer of said laminar sheet and at least one layer of adhesive between the layers of laminar sheet; and a pressed plywood laminar radicle sheet comprising at least one layer of a pressed laminar radicle sheet, at least two layers of some other material and at least one layer of adhesive between the layers.

No. of Pages : 21 No. of Claims : 13

(12) PATENT APPLICATION PUBLICATION
(19) INDIA
(22) Date of filing of Application :19/12/2012
(21) Application No.2806/MUMNP/2012 A
(43) Publication Date : 31/01/2014

(54) Title of the invention : NOVEL ANTIFUNGAL 5 6 DIHYDRO 4 [(DIFLUOROETHYL)PHENYL] 4H PYRROLO[1 2 A][1 4]BENZODIAZEPINE AND 4 (DIFLUOROETHYL)PHENYL 6H PYRROLO[1 2 A][1 4]BENZODIAZEPINE DERIVATIVES

(51) International classification :C07D487/04,A61K31/5517,A61P31/10
(31) Priority Document No :10165076.0
(32) Priority Date :07/06/2010
(33) Name of priority country :EPO
(86) International Application No :PCT/EP2011/059058
Filing Date :01/06/2011
(87) International Publication No :WO 2011/154298
(61) Patent of Addition to Application Number :NA
Filing Date :NA
(62) Divisional to Application Number :NA
Filing Date :NA

(71)**Name of Applicant :**
1)JANSSEN PHARMACEUTICA NV
Address of Applicant :Turnhoutseweg 30 B 2340 Beerse Belgium
(72)**Name of Inventor :**
1)MEERPOEL Lieven
2)MAES Louis Jules Roger Marie
3)DE WIT Kelly

(57) Abstract :
The present invention concerns novel compounds of Formula (I) wherein R R R R R and R have the meaning defined in the claims. The compounds according to the present invention are active mainly against dermatophytes and systemic fungal infections. The invention further relates to processes for preparing such novel compounds pharmaceutical compositions comprising said compounds as an active ingredient as well as the use of said compounds as a medicament.

No. of Pages : 62 No. of Claims : 13

(12) PATENT APPLICATION PUBLICATION
(19) INDIA
(22) Date of filing of Application :19/12/2012
(21) Application No.2808/MUMNP/2012 A
(43) Publication Date : 31/01/2014

(54) Title of the invention : METHODS AND COMPOSITIONS FOR DIAGNOSIS AND PROGNOSIS OF RENAL INJURY AND RENAL FAILURE

(51) International classification :G01N33/48,G01N33/53
(31) Priority Document No :61/357,956
(32) Priority Date :23/06/2010
(33) Name of priority country :U.S.A.
(86) International Application No :PCT/US2011/001127
Filing Date :23/06/2011
(87) International Publication No :WO/2011/162820
(61) Patent of Addition to Application Number :NA
Filing Date :NA
(62) Divisional to Application Number :NA
Filing Date :NA

(71)**Name of Applicant :**
1)ASTUTE MEDICAL, INC.
Address of Applicant :Blg 2, R. 645 3550 General Atomics Court San Diego, CA 92121, UNITED STATES OF AMERICA
(72)**Name of Inventor :**
1)ANDERBERG, Joseph
2)GRAY, Jeff
3)MCPHERSON, Paul
4)NAKAMURA, Kevin
5)KAMPF, James, Patrick

(57) Abstract :
The present invention relates to methods and compositions for monitoring, diagnosis, prognosis, and determination of treatment regimens in subjects suffering from or suspected of having a renal injury. In particular, the invention relates to using a one or more assays configured to detect a kidney injury marker selected from the group consisting of Cancer antigen CA 15-3, C-C Motif chemokine 18, C-C Motif chemokine 24, Cathepsin D, C-X-C Motif chemokine 13, C-C motif chemokine 8, Interleukin-2 receptor alpha chain, Insulin-like growth factor-binding protein 3, Interleukin-11, Matrix Metalloproteinase-8, Transforming growth factor alpha, IgG1, and IgG2 as diagnostic and prognostic biomarkers in renal injuries.

No. of Pages : 458 No. of Claims : 108

(12) PATENT APPLICATION PUBLICATION
(19) INDIA
(22) Date of filing of Application :25/09/2012
(21) Application No.2268/MUMNP/2012 A
(43) Publication Date : 31/01/2014

(54) Title of the invention : GEAR GRINDING MACHINE AND GEAR GRINDING METHOD

(51) International classification :B23F1/02,B23F23/00
(31) Priority Document No :2010162428
(32) Priority Date :20/07/2010
(33) Name of priority country :Japan
(86) International Application No :PCT/JP2011/065533
Filing Date :07/07/2011
(87) International Publication No :WO 2012/011392
(61) Patent of Addition to Application Number :NA
Filing Date :NA
(62) Divisional to Application Number :NA
Filing Date :NA

(71)**Name of Applicant :**
1)MITSUBISHI HEAVY INDUSTRIES LTD.
Address of Applicant :16 5 Konan 2 chome Minato ku Tokyo 1088215 Japan
(72)**Name of Inventor :**
1)OTSUKI Naohiro
2)MASUO Koichi

(57) Abstract :
The actual axial center position of a helical gear (10) relative to the axial center position of a rotary table (112) is calculated on the basis of input gear dimensions and information from a touch probe (120) (S1 to S3). Correction values for the positions and motions of the rotary table (112) and a grindstone (118) are calculated on the basis of the actual axial center position of the helical gear (10) (S8). Operation values for the rotary table (112) a column (113) a saddle (114) and a grindstone head (116) are calculated by adding the correction values to reference values for the positions and motions of the rotary table (112) and the grindstone (118) (S9). Motors (112M to 114M 116M) are controlled in such a way that operation is carried out at the operation values to thereby carry out form grinding (S10).

No. of Pages : 31 No. of Claims : 4

(12) PATENT APPLICATION PUBLICATION
(19) INDIA
(22) Date of filing of Application :19/11/2012
(21) Application No.2580/MUMNP/2012 A
(43) Publication Date : 31/01/2014

(54) Title of the invention : BARRIER ASSEMBLY FOR SHORELINE

(51) International classification :E02B3/04,E02B3/06,E02B3/12
(31) Priority Document No :1009802.8
(32) Priority Date :11/06/2010
(33) Name of priority country :U.K.
(86) International Application No :PCT/GB2011/050983
Filing Date :24/05/2011
(87) International Publication No :WO 2011/154714
(61) Patent of Addition to Application Number :NA
Filing Date :NA
(62) Divisional to Application Number :NA
Filing Date :NA

(71)**Name of Applicant :**
1)HESCO BASTION LIMITED
Address of Applicant :Unit 37 Knowsthorpe Gate Cross Green Industrial Estate Leeds Yorkshire LS9 0NP U.K.
(72)**Name of Inventor :**
1)HESELDEN James

(57) Abstract :
There is disclosed a barrier assembly (1) for shoreline preservation or restoration comprising a gabion having opposed side walls (13 15) connected together at spaced intervals along the length of the gabion by a plurality of partition walls (7 9) the spaces between neighbouring pairs of partition walls defining together with the side walls at least one individual compartment (7) of the gabion the at least one individual compartment of the gabion being bounded by the respective opposed side walls or by opposed side wall sections of the respective opposed side walls the partition walls being pivotally connected to the side walls the individual compartment of the gabion having extending therefrom in a direction away from the individual compartment convergent at least partly open framework panels (21) forming or forming part of a protuberant compartment (5) on the gabion. A method of preserving and restoring a shoreline and use of a barrier assembly is also disclosed.

No. of Pages : 40 No. of Claims : 38

(12) PATENT APPLICATION PUBLICATION
(19) INDIA
(22) Date of filing of Application :20/11/2012
(21) Application No.2584/MUMNP/2012 A
(43) Publication Date : 31/01/2014

(54) Title of the invention : CORD TENSION CONTROL FOR TOP DOWN/BOTTOM UP COVERING FOR ARCHITECTURAL OPENINGS

(51) International classification :E06B9/322
(31) Priority Document No :PCT/US2011/034239
(32) Priority Date :28/04/2011
(33) Name of priority country :U.S.A.
(86) International Application No :PCT/US2011/036122
Filing Date :11/05/2011
(87) International Publication No :WO/2012/150946
(61) Patent of Addition to Application Number :NA
Filing Date :NA
(62) Divisional to Application Number :NA
Filing Date :NA

(71)**Name of Applicant :**
1)HUNTER DOUGLAS INC.
Address of Applicant :One Blue Hill Plaza P.O. Box 740 Pearl River New York 10965 United States of America
(72)**Name of Inventor :**
1)Terrence M. Drew
2)Jon C. Fearnow
3)Suzanne M. Fujita
4)Jeffrey L. Spray

(57) Abstract :
Cord tensioning systems are provided for top down/bottom up coverings to prevent entanglement of lift cords about associated wrap spools by correlating rotation of the wrap spools with translating threaded nuts mounted on threaded shafts rotating in unison with the wrap spools whereby abutment of nuts associated with lift spools prevent over movement of rails associated with the spools and thus entanglement of the lift cords associated therewith.

No. of Pages : 55 No. of Claims : 8

(12) PATENT APPLICATION PUBLICATION
(19) INDIA
(22) Date of filing of Application :22/08/2012
(21) Application No.2023/MUMNP/2012 A
(43) Publication Date : 31/01/2014

(54) Title of the invention : TAPERED SPLINE CONNECTION FOR DRILL PIPE CASING AND TUBING

(51) International classification :E21B17/02
(31) Priority Document No :12/695569
(32) Priority Date :28/01/2010
(33) Name of priority country :U.S.A.
(86) International Application No :PCT/IB2011/050329
Filing Date :25/01/2011
(87) International Publication No :WO 2011/092630
(61) Patent of Addition to Application Number :NA
Filing Date :NA
(62) Divisional to Application Number :NA
Filing Date :NA

(71)**Name of Applicant :**
1)SUNSTONE TECHNOLOGIES LLC
Address of Applicant :Suite 800 101 N Robinson Oklahoma City Oklahoma 73102 U.S.A.
(72)**Name of Inventor :**
1)HUGHES William James
2)LANE Bryan
3)BRIGGS Gary Marshall

(57) Abstract :
An apparatus comprises a first number of splines located near a first end of a first joint section and a second number of splines located near a second end of a second joint section. The first number of splines extends in an axial direction of the first joint section and spans a circumferential surface of the first joint section. Each of the first number of splines has a base a tip and a pair of flanks that extends from the base to the tip and forms an acute angle. Each of the first number of splines are configured to be received between adjacent pairs of splines in the second number of splines as the first end of the first joint section and the second end of the second joint section are joined.

No. of Pages : 61 No. of Claims : 15

(12) PATENT APPLICATION PUBLICATION
(19) INDIA
(22) Date of filing of Application :24/07/2012
(21) Application No.2107/MUM/2012 A
(43) Publication Date : 31/01/2014

(54) Title of the invention : AN IMPROVED PROCESS FOR PREPARATION OF CLOPIDOGREL BISULPHATE POLYMORPHIC FORM I.

(51) International classification :C07D495/04
(31) Priority Document No :NA
(32) Priority Date :NA
(33) Name of priority country :NA
(86) International Application No :NA
Filing Date :NA
(87) International Publication No :N/A
(61) Patent of Addition to Application Number :NA
Filing Date :NA
(62) Divisional to Application Number :NA
Filing Date :NA

(71)**Name of Applicant :**
1)CALYX CHEMICALS AND PHARMACEUTICALS LTD.
Address of Applicant :2,MARWAH'S COMPLEX, SAKIVIHAR ROAD, SAKINAKA, ANDHERI(E),MUMBAI-400 072, MAHARASHTRA,INDIA.
(72)**Name of Inventor :**
1)KAUL, VIJAY KUMAR
2)LAL, BANSI
3)POTADAR, SANTOSHKUMAR MAHADEV
4)SURYAVANSHI, JITENDRA PANDURANG
5)PEDDIREDDY, JAGANMOHAN REDDY

(57) Abstract :
The present invention relates to an improved process for preparation of stable and pure Clopidogrel bisulfate polymorphic form I from Clopidogrel base.

No. of Pages : 16 No. of Claims : 7

(12) PATENT APPLICATION PUBLICATION
(19) INDIA
(22) Date of filing of Application :20/11/2012
(21) Application No.2585/MUMNP/2012 A
(43) Publication Date : 31/01/2014

(54) Title of the invention : CORD TENSION CONTROL FOR TOP DOWN/BOTTOM UP COVERING FOR ARCHITECTURAL OPENINGS

(51) International classification :E06B9/322
(31) Priority Document No :12/771,101
(32) Priority Date :30/04/2010
(33) Name of priority country :U.S.A.
(86) International Application No :PCT/US2011/034239
Filing Date :28/04/2011
(87) International Publication No :WO/2011/137205
(61) Patent of Addition to Application Number :NA
Filing Date :NA
(62) Divisional to Application Number :NA
Filing Date :NA

(71)**Name of Applicant :**
1)HUNTER DOUGLAS INC.
Address of Applicant :1 Blue Hill Plaza PO Box 740 Pearl River NY 10965 United States of America
(72)**Name of Inventor :**
1)DREW Terrence M.
2)FEARNOW Jon C.
3)FUJITA Suzanne M.
4)SPRAY Jeffrey L.

(57) Abstract :
Cord tensioning systems are provided for top down/bottom up coverings to prevent entanglement of lift cords about associated wrap spools by correlating rotation of the wrap spools with translating threaded nuts mounted on threaded shafts rotating in unison with the wrap spools whereby abutment of nuts associated with lift spools prevent over movement of rails associated with the spools and thus entanglement of the lift cords associated therewith.

No. of Pages : 52 No. of Claims : 9

(12) PATENT APPLICATION PUBLICATION
(19) INDIA
(22) Date of filing of Application :07/09/2012
(21) Application No.2130/MUMNP/2012 A
(43) Publication Date : 31/01/2014

(54) Title of the invention : DISINFECTANT COMPOSITION AND ITS USE IN DENTAL TREATMENT

(51) International classification :A61K6/00,A61K9/00,A61K47/12
(31) Priority Document No :2004260
(32) Priority Date :18/02/2010
(33) Name of priority country :Netherlands
(86) International Application No :PCT/NL2011/050118
Filing Date :18/02/2011
(87) International Publication No :WO 2011/102724
(61) Patent of Addition to Application Number :NA
Filing Date :NA
(62) Divisional to Application Number :NA
Filing Date :NA

(71)**Name of Applicant :**
1)NIKINC PHARMA B.V.
Address of Applicant :High Tech Campus 9 (Beta Building) NL 5656 AE Eindhoven Netherlands
(72)**Name of Inventor :**
1)VAN DER WAAL Suzette Veronica
2)BRUL Stanley
3)DE SOET Johannes Jacob
4)VAN DER SLUIS Lucas Wilhelmus Maria

(57) Abstract :
The present invention concerns a disinfectant or antimicrobial composition for use in dental treatment such as treatment and/or prevention of periodontitis gingivitis or other forms of oral infection. The present Inventor found that microorganisms that infect the dental tissues and cause inflammation thereof are susceptible to osmotic stress to such extent that the application of a hypertonic composition is effective in curing or preventing infection and/or inflammations. It was furthermore found that these microorganisms are also susceptible to acidic stress. The present invention therefore provides compositions that induce osmotic stress in microorganisms causing infection of dental tissue when topically applied thereto preferably osmotic as well as acidic stress. The present invention also concerns the methods and uses involving the compositions of the invention

No. of Pages : 37 No. of Claims : 19

(12) PATENT APPLICATION PUBLICATION
(19) INDIA
(22) Date of filing of Application :21/09/2012
(21) Application No.2228/MUMNP/2012 A
(43) Publication Date : 31/01/2014

(54) Title of the invention : PYRROLIDINE SUBSTITUTED FLAVONES FOR THE TREATMENT OF INFLAMMATORY DISORDERS

(51) International classification :A61K31/4025,C07D405/04,A61P1/00
(31) Priority Document No :NA
(32) Priority Date :NA
(33) Name of priority country :NA
(86) International Application No :PCT/IB2010/050837
Filing Date :26/02/2010
(87) International Publication No :WO 2011/104584
(61) Patent of Addition to Application Number :NA
Filing Date :NA
(62) Divisional to Application Number :NA
Filing Date :NA

(71)**Name of Applicant :**
1)PIRAMAL HEALTHCARE LIMITED
Address of Applicant :Piramal Tower Ganpatrao Kadam Marg Lower Parel Mumbai 400 013 Maharashtra India
(72)**Name of Inventor :**
1)JOSHI Kalpana Sanjay
2)PARIKH Sapna Hasit

(57) Abstract :
The present invention relates to the use of a compound of formula 1 a stereoisomer or a tautomer thereof or a pharmaceutically acceptable salt or a pharmaceutically acceptable solvate thereof for the treatment of an inflammatory disorder. The invention further relates to a pharmaceutical composition comprising a compound of formula 1 and at least one pharmaceutically acceptable carrier for use in the treatment of an inflammatory disorder. The invention also relates to a method for the treatment of an inflammatory disorder by administering a therapeutically effective amount of the compound of formula 1 to a subject in need thereof.

No. of Pages : 75 No. of Claims : 16

(12) PATENT APPLICATION PUBLICATION
(19) INDIA
(22) Date of filing of Application :26/09/2012
(21) Application No.2278/MUMNP/2012 A
(43) Publication Date : 31/01/2014

(54) Title of the invention : METHOD OF MANUFACTURING CERAMIC PRIMARY CROWN AND CERAMIC PRIMARY CROWN MANUFACTURED BY THE SAME

(51) International classification	:A61C5/09, A61C13/08
(31) Priority Document No	:10-2010-0031516
(32) Priority Date	:06/04/2010
(33) Name of priority country	:Republic of Korea
(86) International Application No	:PCT/KR2010/008914
Filing Date	:14/12/2010
(87) International Publication No	:WO/2011/126200
(61) Patent of Addition to Application Number	:NA
Filing Date	:NA
(62) Divisional to Application Number	:NA
Filing Date	:NA

(71)**Name of Applicant :**
1)HASS CO. LTD.
Address of Applicant :301 306 Venture Plaza 2 Block Ga-2-3 Gangneung Science Park Daejeon-dong Gangneung-si Gangwon-do 210-340 Republic of Korea.
(72)**Name of Inventor :**
1)KIM Yong-Su
2)JEON Hyun-Jun
3)OH Kyung Sik
4)KIM Sung Ki
5)KIM Se-Hoon
6)KIM Joon Hyung
7)HONG Young Pyo

(57) Abstract :
Provided are a method of manufacturing a ceramic primary crown including mixing a source material including zirconia or alumina that configures a frame of a primary crown, a polymer for reducing viscosity and applying ductility upon injection molding, and a toner for providing the same or similar color as baby teeth, heating the polymer contained in the mixed source material to have ductility, injection molding the heated source material, extracting the polymer to reduce brittleness and increase ductility with respect to the injection-molded matter, removing fat to completely eliminate the polymer element from the injection-molded matter, from which the polymer is partially extracted through the polymer extraction, sintering the fat-removed body, from which the polymer is removed, to improve mechanical properties, and polishing an outer surface of the sintered body to provide gloss, and performing barrel-finishing to remove a burr. Therefore, aesthetic appreciation and bioaffinity can be improved using a source material such as zirconia or alumina having high strength and toughness, and easy manufacture and mass production become possible using injection molding to reduce manufacturing cost and product price, widely utilizing the primary crown for children™s prosthesis.

No. of Pages : 19 No. of Claims : 10

(12) PATENT APPLICATION PUBLICATION
(19) INDIA
(22) Date of filing of Application :01/11/2012
(21) Application No.2498/MUMNP/2012 A
(43) Publication Date : 31/01/2014

(54) Title of the invention : DIGITAL WORK PROMOTION SERVER

(51) International classification :G06Q 30/00
(31) Priority Document No :61/320,601
(32) Priority Date :02/04/2010
(33) Name of priority country :U.S.A.
(86) International Application No :PCT/US2011/031023
Filing Date :01/04/2011
(87) International Publication No :WO/2011/123838
(61) Patent of Addition to Application Number :NA
Filing Date :NA
(62) Divisional to Application Number :NA
Filing Date :NA

(71)**Name of Applicant :**
1)MENDEZ Samuel J.
Address of Applicant :3620 Huffines Blvd. #834 Carrollton TX 75010 United States of America
2)OJEDA Winston Samuel Jr.
3)OJEDA, WINSTON, SAMUEL, JR.
(72)**Name of Inventor :**
1)MENDEZ Samuel J.
2)OJEDA Winston Samuel Jr.

(57) Abstract :
A computer server for promotion of digital works is provided in one exemplary embodiment of the present invention. The computer server is configured to receive a digital work from a publisher over a first network connection. The computer server is configured to sell over a second network connection to a premium buyer a copy of the digital work to the premium buyer at a premium price. The computer server is configured to sell over a third network connection to a subsequent buyer a copy of the digital work to the subsequent buyer at the premium price or at a regular price. The computer server is configured to in response to the sale to the subsequent buyer provide a reward to the premium buyer.

No. of Pages : 21 No. of Claims : 20

(12) PATENT APPLICATION PUBLICATION
(19) INDIA
(22) Date of filing of Application :27/11/2012
(21) Application No.2639/MUMNP/2012 A
(43) Publication Date : 31/01/2014

(54) Title of the invention : SIMPLIFIED LOW INSERTION FORCE SEALING DEVICE CAPABLE OF SELF RESTRAINT AND JOINT DEFLECTION

(51) International classification :F16L21/03
(31) Priority Document No :61/347612
(32) Priority Date :24/05/2010
(33) Name of priority country :U.S.A.
(86) International Application No :PCT/US2011/037565
Filing Date :23/05/2011
(87) International Publication No :WO 2011/149840
(61) Patent of Addition to Application Number :NA
Filing Date :NA
(62) Divisional to Application Number :NA
Filing Date :NA

(71)**Name of Applicant :**
1)MUELLER INTERNATIONAL LLC
Address of Applicant :1200 Abernathy Rd Suite 1200 Atlanta Georgia 30328 U.S.A.
(72)**Name of Inventor :**
1)HOLMES IV William W.
2)OWEN William H.

(57) Abstract :
A conduit coupling system sealing device bell and method of use are disclosed herein. The system comprises at least two piping components and a sealing device. A first component has a bell and a second component has a spigot the spigot is adapted to mate with the bell. The bell comprises a first end and a second end the first end coupled to the first component. The bell has a concave annular inner surface and a diameter of the annular inner surface adjacent to the first end of the bell is greater than a diameter of the annular inner surface adjacent to the second end of the bell. The sealing device comprises a locking segment comprising a convex outer surface and a K type gasket coupled to a locking segment or a non restraining anti extrusion segment. The sealing device is adapted to fit between the bell and the spigot.

No. of Pages : 35 No. of Claims : 20

(12) PATENT APPLICATION PUBLICATION
(19) INDIA
(22) Date of filing of Application :13/12/2012
(21) Application No.2769/MUMNP/2012 A
(43) Publication Date : 31/01/2014

(54) Title of the invention : SOLID INTERFACE JOINT WITH OPEN POROSITY, FOR NUCLEAR CONTROL ROD

(51) International classification :G21C7/08,G21C7/10
(31) Priority Document No :10 54781
(32) Priority Date :16/06/2010
(33) Name of priority country :France
(86) International Application No :PCT/EP2011/060001
Filing Date :16/06/2011
(87) International Publication No :WO/2011/157782
(61) Patent of Addition to Application Number :NA
Filing Date :NA
(62) Divisional to Application Number :NA
Filing Date :NA

(71)**Name of Applicant :**
1)Commissariat lnergie atomique et aux nergies alternatives
Address of Applicant :25 Rue Leblanc Btiment Le Ponant D 75015 PARIS FRANCE.
(72)**Name of Inventor :**
1)ZABIEGO Maxime
2)DAVID Patrick
3)RAVENET Alain
4)ROCHAIS Denis

(57) Abstract :
The invention relates to a new interface between the cladding and the stack of pellets in a nuclear control rod. According to the invention an interface joint (3) made of a material transparent to neutrons in the form of a structure (3) with a high thermal conductivity and open pores adapted to deform by compression across its thickness is inserted between the cladding and the stack of pellets made of B4C neutron absorber material over at least the height of the stack. The invention also relates to associated production methods.

No. of Pages : 41 No. of Claims : 21

(12) PATENT APPLICATION PUBLICATION
(19) INDIA
(22) Date of filing of Application :18/12/2012
(21) Application No.2798/MUMNP/2012 A
(43) Publication Date : 31/01/2014

(54) Title of the invention : SOLAR-PANEL MOUNTING RACK

(51) International classification :E04H5/00,E04D13/18,H01L31/042
(31) Priority Document No :2010267719
(32) Priority Date :30/11/2010
(33) Name of priority country :Japan
(86) International Application No :PCT/JP2011/074362
Filing Date :21/10/2011
(87) International Publication No :WO 2012/073616
(61) Patent of Addition to Application Number :NA
Filing Date :NA
(62) Divisional to Application Number :NA
Filing Date :NA

(71)**Name of Applicant :**
1)MITSUBISHI HEAVY INDUSTRIES MECHATRONICS SYSTEMS LTD.
Address of Applicant :1 16 Komatsu dori 5 chome Hyogo ku Kobe shi Hyogo 6520865 Japan
(72)**Name of Inventor :**
1)TANAKA Takao
2)NAKAYAMA Yutaka

(57) Abstract :
In order that this mounting base for photovoltaic power generation panels can be installed easily, water can be supplied easily, the mounting base is highly convenient and reliable, and the mounting base has low manufacturing cost and can be installed with good space efficiency, the mounting base for photovoltaic power generation panels is characterized in that the mounting base has: base tanks (2A) formed in the shape of a hollow tank, the base tanks (2A) having load water storage spaces (3) within which load water is stored and having provided thereto panel mounting sections (upper surfaces (7)) on which the photovoltaic power generation panels (P) are mounted; and connection pipes (11A) serving as water supply sections which supply the load water to the load water storage space (3) and which connect and affix the base tanks (2A) to each other to enable the load water to flow between the connected base tanks (2A). The mounting base for photovoltaic power generation panels is also provided with stress relieving joints (15) (parallelly positioning means) for positioning the base tanks (2A) in such a manner that, in a plan view, the base tanks (2A) are parallel to each other when connected to each other through the connection pipes (11A). The base tanks (2A) can have recesses, which are recessed upward, formed in the bottom surfaces thereof and airflow openings which connect to the recesses can be formed in side surfaces (9).

No. of Pages : 68 No. of Claims : 15

(12) PATENT APPLICATION PUBLICATION
(19) INDIA
(22) Date of filing of Application :31/08/2012
(21) Application No.2081/MUMNP/2012 A
(43) Publication Date : 31/01/2014

(54) Title of the invention : STATIC VAR COMPENSATOR WITH MULTILEVEL CONVERTER

(51) International classification :H02J 3/18
(31) Priority Document No :NA
(32) Priority Date :NA
(33) Name of priority country :NA
(86) International Application No :PCT/EP2010/053290
Filing Date :15/03/2010
(87) International Publication No :WO/2011/113471
(61) Patent of Addition to Application Number :NA
Filing Date :NA
(62) Divisional to Application Number :NA
Filing Date :NA

(71)**Name of Applicant :**
1)ALSTOM TECHNOLOGY LTD
Address of Applicant :Brown Boveri Strasse 7 - 5400 Baden Switzerland.
(72)**Name of Inventor :**
1)CROOKES William
2)TRAINER David Reginald
3)OATES Donald Colin Murray

(57) Abstract :
A static synchronous compensator (36) for use in reactive power compensation, the static synchronous compensator (36) comprising at least one primary compensator limb (38) including first and second DC terminals (40, 42), and an AC terminal {44) for connection in use to an AC network (58) , the or each primary compensator limb (38) defining first and second limb portions (50, 52) , each limb portion (50, 52) including at least one switching element (54) connected in series with a chain-link converter (56) between a respective one of the first and second DC terminals (40, 42) and the AC terminal (44), the switching elements (54) of the first and second limb portions (50, 52) being operable to switch the respective chain-link converters (5 6) in and out of circuit between the respective DC terminal (40, 42) and the AC terminal (44) and the chain-link converters (56) being operable to generate a voltage waveform at the AC terminal (44) ; and a secondary compensator limb (4 6) including at least one DC link capacitor (48) connected between the first and second-DC terminals (40, 42), the secondary compensator limb (4 6) being connected in parallel with the or each primary compensator limb (38) .

No. of Pages : 39 No. of Claims : 16

(12) PATENT APPLICATION PUBLICATION
(19) INDIA
(22) Date of filing of Application :15/11/2012
(21) Application No.2565/MUMNP/2012 A
(43) Publication Date : 31/01/2014

(54) Title of the invention : DISK BRAKE APPARATUS FOR A RAILWAY VEHICLE

(51) International classification	:F16D65/092, B61H5/00
(31) Priority Document No	:10-2010-0054051
(32) Priority Date	:08/06/2010
(33) Name of priority country	:Republic of Korea
(86) International Application No	:PCT/KR2011/000557
Filing Date	:27/01/2011
(87) International Publication No	:WO/2011/155684
(61) Patent of Addition to Application Number	:NA
Filing Date	:NA
(62) Divisional to Application Number	:NA
Filing Date	:NA

(71)**Name of Applicant :**
1)YUJINKIKONG MFG. CO. LTD.
Address of Applicant :770-2 Wonsi-dong Danwon-gu Ansan-si Gyeonggi-do 425-852 Republic of Korea
(72)**Name of Inventor :**
1)LEE Jae-Young

(57) Abstract :
The present invention relates to a disk brake apparatus for a railway vehicle and more particularly to a disk brake apparatus for a railway vehicle which is a brake apparatus installed on a railway vehicle and operated by using a lever mechanism so that: manufacturing costs thereof can be reduced due to the simplified structure of the apparatus; stopping force is increased due to easy lever adjustment; and maintenance and repair can be easily performed. To achieve the above objectives the disk brake apparatus for a railway vehicle according to the present invention includes a pair of caliper levers actuated by the operation of a cylinder rod of the cylinder and a lever mechanism connected and coupled between the cylinder rod of the cylinder and the pair of caliper levers.

No. of Pages : 24 No. of Claims : 6

(12) PATENT APPLICATION PUBLICATION
(19) INDIA
(22) Date of filing of Application :12/11/2012
(21) Application No.2557/MUMNP/2012 A
(43) Publication Date : 31/01/2014

(54) Title of the invention : METHODS FOR MANAGEMENT OF MACRO NETWORK KEY PERFORMANCE INDICATORS IMPACTS FOR A MASS DEPLOYMENT OF FEMTOCELLS

(51) International classification	:H04W52/24, H04W52/28,
(31) Priority Document No	:1007268.4
(32) Priority Date	:30/04/2010
(33) Name of priority country	:U.K.
(86) International Application No	:PCT/GB2011/050804
Filing Date	:21/04/2011
(87) International Publication No	:WO 2011/135342
(61) Patent of Addition to Application Number	:NA
Filing Date	:NA
(62) Divisional to Application Number	:NA
Filing Date	:NA

(71)**Name of Applicant :**
1)UBIQUISYS LIMITED
Address of Applicant :Windmill Hill Business Park Swindon Wiltshire SN5 6QR U.K.
(72)**Name of Inventor :**
1)CARTER Alan James Auchmuty

(57) Abstract :
Power management is provided in a femtocell basestation in a cellular communications network in order to ensure that the effect of a mass deployment of femtocells on the key performance indicators of the surrounding macro network is bounded for all femtocell traffic profiles. An expected area density of femtocells is determined; a macro layer quality criterion is set; a network performance indicator impact level is set; a maximum impact area allowed for the femtocell is calculated based on the expected area density of femtocells the macro layer quality criterion and the network performance indicator impact level; a distance of a macro layer user from the femtocell is estimated; and the downlink power in the femtocell is controlled based on the estimated distance of the macro layer user from the femtocell and based on the calculated maximum impact area.

No. of Pages : 27 No. of Claims : 12

(12) PATENT APPLICATION PUBLICATION
(19) INDIA
(22) Date of filing of Application :12/11/2012
(21) Application No.2558/MUMNP/2012 A
(43) Publication Date : 31/01/2014

(54) Title of the invention : MEMORY CARD CARRIER, THE METHOD OF FIRST DATA STORAGE INTO THE MEMORY CARD

(51) International classification	:G06K19/073, G06K19/077
(31) Priority Document No	:PP50020-2010
(32) Priority Date	:10/05/2010
(33) Name of priority country	:Slovakia
(86) International Application No	:PCT/IB2011/052041
Filing Date	:09/05/2011
(87) International Publication No	:WO/2011/141864
(61) Patent of Addition to Application Number	:NA
Filing Date	:NA
(62) Divisional to Application Number	:NA
Filing Date	:NA

(71)**Name of Applicant :**
1)LOGOMOTION S.R.O.
Address of Applicant :Winterova 15 921 01 PieÅ¡#any Slovakia
(72)**Name of Inventor :**
1)FLOREK Miroslav
2)MASARYK Michal

(57) Abstract :
The carrier of a memory card (2) is in the shape of a flat card (1) with a contact field (6) which is connected to inner circuits of the memory card (2) over a conductive connection (8). Mechanical connection of the memory card (2) with the remaining body of the flat card (1) can be in the form of connection strips (5) that interrupt the snap-out line (3). A conductive connection (8) can run through a connection strip (5). The flat card (1) can be equipped with a foil (9). The flat card (1) can be inserted into an automated device which operates with it as if it was a standard card with a contact field (6). The user snaps out the memory card (2) from the carrier´s body by which the conductive connection (8) is mechanically interrupted.

No. of Pages : 21 No. of Claims : 11

(12) PATENT APPLICATION PUBLICATION
(19) INDIA
(22) Date of filing of Application :18/12/2012
(21) Application No.2799/MUMNP/2012 A
(43) Publication Date : 31/01/2014

(54) Title of the invention : A BODY PART SHAPED MOULD AND A METHOD FOR USING SUCH A MOULD

(51) International classification :A61F2/52,A41C3/14
(31) Priority Document No :10506509
(32) Priority Date :21/06/2010
(33) Name of priority country :Sweden
(86) International Application No :PCT/SE2011/050804
Filing Date :20/06/2011
(87) International Publication No :WO 2011/162704
(61) Patent of Addition to Application Number :NA
Filing Date :NA
(62) Divisional to Application Number :NA
Filing Date :NA

(71)**Name of Applicant :**
1)NOVOAIM AB
Address of Applicant :Stenbocksgatan 4 S 11430 Stockholm Sweden
(72)**Name of Inventor :**
1)SJUNNESSON Hkan
2)HEDˆN Per

(57) Abstract :
The invention relates to a body part shaped mould for example for creating a test breast a customized bra or a test body part and a method for using such a mould. The mould is characterised in that it is made of a formstable material having a predetermined shape forming at least one cup. The cup is having a breast like appearance or a body part appearance with a specific size and shape and is adapted to be fitted to a patient s chest or corresponding body part !t is also adapted to be filled with a hardening mixture in a cavity formed between the mould and the chest or corresponding body part. An object of the present invention is to make it possible to try out a suitable size and shape of a breast or other body part before an implantation is made.

No. of Pages : 21 No. of Claims : 12

(12) PATENT APPLICATION PUBLICATION
(19) INDIA
(22) Date of filing of Application :27/11/2012

(21) Application No.2642/MUMNP/2012 A
(43) Publication Date : 31/01/2014

(54) Title of the invention : SYSTEMS OF COMPUTERIZED AGENTS AND USER-DIRECTED SEMANTIC NETWORKING

(51) International classification	:G06F17/30, H04L12/28
(31) Priority Document No	:61/357,509 (US)
(32) Priority Date	:22/06/2010
(33) Name of priority country	:U.S.A.
(86) International Application No	:PCT/CA2011/000719
Filing Date	:22/06/2011
(87) International Publication No	:WO/2011/160205
(61) Patent of Addition to Application Number	:NA
Filing Date	:NA
(62) Divisional to Application Number	:NA
Filing Date	:NA

(71)**Name of Applicant :**
1)PRIMAL FUSION INC.
Address of Applicant :7 258 King Street N. Waterloo Ontario N2J 2Y9 Canada
(72)**Name of Inventor :**
1)Peter Joseph Sweeney

(57) Abstract :
A system method and computer program product in which semi-autonomous agents interact with a semantic network. In a basic embodiment of the system a data structure providing a semantic network is provided in a non-transitory computer-readable medium within a computer network. A plurality of computer-implemented agents are deployed within the computer network and interactive with the semantic network. A user interface is provided and configured to permit a user to create and/or modify the semantic network. The agents are configured to read and modify the semantic network without receiving explicit instructions from a user after their initial deployment whereby the agents operate as assistants to support the users use of the network.

No. of Pages : 89 No. of Claims : 29

(12) PATENT APPLICATION PUBLICATION
(19) INDIA
(22) Date of filing of Application :24/07/2012
(21) Application No.2109/MUM/2012 A
(43) Publication Date : 31/01/2014

(54) Title of the invention : PHARMACEUTICAL FORMULATION OF TADALAFIL AND PROCESS FOR THE PREPARATION THEREOF

(51) International classification	:A61K31/4985, C07D471/14
(31) Priority Document No	:NA
(32) Priority Date	:NA
(33) Name of priority country	:NA
(86) International Application No	:NA
Filing Date	:NA
(87) International Publication No	:N/A
(61) Patent of Addition to Application Number	:NA
Filing Date	:NA
(62) Divisional to Application Number	:NA
Filing Date	:NA

(71)**Name of Applicant :**
1)V-ENSURE PHARMA TECHNOLOGIES PRIVATE LIMITED
Address of Applicant :1004,IRIS,KESAR GARDEN, SECTOR-20, KHARGHAR, NAVI MUMBAI-410210, MAHARASHTRA,INDIA.
(72)**Name of Inventor :**
1)SATHYANARAYANA VEMULA
2)MOUSUMI S. VEMULA
3)SASWAT ABHISHEK PADHI

(57) Abstract :
An improved pharmaceutical formulation of tadalafil i.e., (6R-trans)-6-(l,3-benzodioxol-5-yl)-2,3,6,7,12,12a-hexahydro-2-methylpyrazino-[1,2:l,6] pyrido[3,4-b]indole-l,4-dione or a pharmaceutically acceptable salt thereof and process for the preparing thereof are disclosed.

No. of Pages : 20 No. of Claims : 12

(12) PATENT APPLICATION PUBLICATION
(19) INDIA
(22) Date of filing of Application :08/08/2012
(21) Application No.2295/MUM/2012 A
(43) Publication Date : 31/01/2014

(54) Title of the invention : IMAGE PROCESSING APPARATUS, METHOD AND PROGRAM

(51) International classification	:G06T1/00, A63F13/10
(31) Priority Document No	:2011197180
(32) Priority Date	:09/09/2011
(33) Name of priority country	:Japan
(86) International Application No	:NA
Filing Date	:NA
(87) International Publication No	: NA
(61) Patent of Addition to Application Number	:NA
Filing Date	:NA
(62) Divisional to Application Number	:NA
Filing Date	:NA

(71)**Name of Applicant :**
1)SONY CORPORATION
Address of Applicant :1-7-1 Konan Minato-ku Tokyo Japan
(72)**Name of Inventor :**
1)KENTARO FUKAZAWA

(57) Abstract :
Provided is an image processing apparatus including an enlargement ratio setting section which sets a region of data in an original image including a designated position designated as an object to be enlarged within the original image as a region to be enlarged and sets an enlargement ratio to the region to be enlarged based on an image feature amount showing complexity of an image of the region to be enlarged and an enlarged image generation section which generates enlarged image data for the data of the original image by applying an enlargement process by the enlargement ratio set by the enlargement ratio setting section.

No. of Pages : 46 No. of Claims : 9

(12) PATENT APPLICATION PUBLICATION
(19) INDIA
(22) Date of filing of Application :16/11/2012
(21) Application No.2573/MUMNP/2012 A
(43) Publication Date : 31/01/2014

(54) Title of the invention : STEM CELL BANK FOR PERSONALIZED MEDICINE

(51) International classification :C12N5/071,A01N63/00
(31) Priority Document No :61/331842
(32) Priority Date :06/05/2010
(33) Name of priority country :U.S.A.
(86) International Application No :PCT/IL2011/000362
Filing Date :05/05/2011
(87) International Publication No :WO 2011/138786
(61) Patent of Addition to Application Number :NA
Filing Date :NA
(62) Divisional to Application Number :NA
Filing Date :NA

(71)**Name of Applicant :**
1)STEM CELL MEDICINE LTD.
Address of Applicant :16 Einstein Street Weizmann Science Park 74140 Ness Ziona Israel
(72)**Name of Inventor :**
1)MAROM Ehud

(57) Abstract :
A stem cell bank is disclosed which stores stem cells collected from individuals throughout their entire life. The stem cell bank stores stem cells of various types which are obtained from a plurality of sources from a single individual. Also provided are methods of personalized medicine that utilizes cells stored in a bank and compositions of stem cells for the treatment of various types of diseases.

No. of Pages : 36 No. of Claims : 43

(12) PATENT APPLICATION PUBLICATION
(19) INDIA
(22) Date of filing of Application :01/11/2012
(21) Application No.2500/MUMNP/2012 A
(43) Publication Date : 31/01/2014

(54) Title of the invention : METHOD AND DEVICE FOR PRODUCING A COMPOSITE MOLDED PART FROM FIBER REINFORCED PLASTIC

(51) International classification :B29C70/44
(31) Priority Document No :10 2010 014 545.9
(32) Priority Date :10/04/2010
(33) Name of priority country :Germany
(86) International Application No :PCT/DE2011/000379
Filing Date :07/04/2011
(87) International Publication No :WO 2011/124216
(61) Patent of Addition to Application Number :NA
Filing Date :NA
(62) Divisional to Application Number :NA
Filing Date :NA

(71)**Name of Applicant :**
1)PREMIUM AEROTEC GMBH
Address of Applicant :Haunstetter Str. 225 86179 Augsburg Germany
2)EADS DEUTSCHLAND GMBH
(72)**Name of Inventor :**
1)LLOPART PRIETO Llorenc
2)NEUMAIER Rainer
3)SCHOLLER Jochen
4)KLUG Markus

(57) Abstract :
The invention relates to a method for producing a composite molded part from fiber reinforced plastic comprising the following steps: a) providing a pre preg semifinished product (1) comprising fibers (12) pre impregnated with a matrix material (10); b) encasing the pre preg semifinished product (1) with a flexible sheet material (2; 2) which has a gas permeable membrane (20) that nevertheless holds back the matrix material and at least one inner planar gas conducting device (22); c) encasing the inner arrangement (3) formed by the pre preg semifinished product (1) and the sheet material (2 2) with a first gas tight casing (4; 4); d) positioning the inner arrangement (3) provided with the first gas tight casing (4; 4) on a mold surface (60) of a first mold (6); e) encasing the inner arrangement (3) provided with the first gas tight casing (4; 4) and the mold surface (60) having a second gas tight casing (7); f) applying a first vacuum to the inner planar gas conducting device (22) and the inside of the first gas tight casing (4; 4); g) heating the entire arrangement for a first specified time under the influence of a first specified temperature; h) applying a second vacuum to the inside of the second gas tight casing (7); and i) heating the entire arrangement for a second specified time under the influence of a second specified temperature.

No. of Pages : 22 No. of Claims : 10

(12) PATENT APPLICATION PUBLICATION
(19) INDIA
(22) Date of filing of Application :01/11/2012
(21) Application No.2501/MUMNP/2012 A
(43) Publication Date : 31/01/2014

(54) Title of the invention : METHOD FOR PRODUCING TERT-BUTYL ALCOHOL

(51) International classification	:C07C31/12, C07C29/04
(31) Priority Document No	:2010117945
(32) Priority Date	:04/05/2010
(33) Name of priority country	:Russia
(86) International Application No	:PCT/RU2010/000561
Filing Date	:07/10/2010
(87) International Publication No	:WO/2011/139177
(61) Patent of Addition to Application Number	:NA
Filing Date	:NA
(62) Divisional to Application Number	:NA
Filing Date	:NA

(71)**Name of Applicant :**
1)OBSHESTVO S OGRANICHENNOI OTVETSTVENNOSIU EUROCHIM-SPB-TRADING
Address of Applicant :Mitrofanievskoe shosse 6A liter D St.Petersburg 198095 Federation Russia
(72)**Name of Inventor :**
1)BUSYGIN Vladimir Mikhajlovich
2)DYKMAN Arkadij Samuilovich
3)GILMANOV Hamit Hamisovich
4)POLYAKOV Sergej Aleksandrovich
5)SINICYN Aleksandr Vasilevich
6)FEDORCOVA Elena Vladimirovna
7)FLEGONTOV Aleksej Michaylovich

(57) Abstract :
The invention relates to the field of petroleum chemistry to be more precise to methods for producing tert-butyl alcohol a semifinished product in organic synthesis and can be used in the production of isobutylene and isoprene which are used in the manufacture of butyl rubber. What is proposed is: a method for producing tert-butyl alcohol by liquid-phase hydration of isobutylene or an isobutylene-containing hydrocarbon mixture which comprise 0.1-1.2 % by mass of isoprene with water at elevated temperature in the presence of tert-butyl alcohol as solvent with a single-pass feed of feedstock into a column-type reactor which is filled with a sulfocationic catalyst. The end product is separated off from the resultant reaction mixture by fractional distillation. The proposed method makes it possible to reduce the amount of byproducts produced to 0.35 % or lower and at the same time to extend the service life of the catalyst to 12-14 thousand hours whilst maintaining the productivity of the process.

No. of Pages : 9 No. of Claims : 1

(12) PATENT APPLICATION PUBLICATION
(19) INDIA
(22) Date of filing of Application :23/08/2012
(21) Application No.2034/MUMNP/2012 A
(43) Publication Date : 31/01/2014

(54) Title of the invention : METHODS AND APPARATUS FOR COMMUNICATING AND/OR USING TRANSMISSION POWER INFORMATION

(51) International classification :H04B7/005
(31) Priority Document No :60/752,973
(32) Priority Date :22/12/2005
(33) Name of priority country :U.S.A.
(86) International Application No :PCT/US2006/048506
Filing Date :20/12/2006
(87) International Publication No :WO/2007/075731
(61) Patent of Addition to Application Number :NA
Filing Date :NA
(62) Divisional to Application Number :1140/MUMNP/2008
Filed on :05/06/2008

(71)**Name of Applicant :**
1)QUALCOMM INCORPORATED
Address of Applicant :Attn: International IP Administration 5775 Morehouse Drive San Diego California 92121-1714 United States of America
(72)**Name of Inventor :**
1)DAS Arnab
2)RANGAN Sundeep

(57) Abstract :
A wireless terminal determines the transmission power used for its dedicated control channel at a point in time and generates a power report indicating a ratio of a maximum wireless terminal transmit power to the transmit power of the dedicated control channel at the point in time. The power report provides a measure of available transmit power for wireless terminal use for other purposes e.g. uplink traffic channels after taking into consideration the transmit power used for the dedicated control channel. The point in time has a known time offset from the start of a communications segment in which the power report is transmitted. This allows the base station receiving dedicated control channel uplink signals from the wireless terminal to measure the received signals receive and process the communicated power report and correlate information to be used for accurate wireless terminal closed loop power control.

No. of Pages : 206 No. of Claims : 15

(12) PATENT APPLICATION PUBLICATION
(19) INDIA
(22) Date of filing of Application :24/07/2012
(21) Application No.2114/MUM/2012 A
(43) Publication Date : 31/01/2014

(54) Title of the invention : METHOD FOR MANUFACTURING WOODEN BILLET, WOODEN BASEBALL BAT AND BILLIARD/SNOOKER CUES

(51) International classification	:B32B21/14, B27N3/18, B32B21/00, B27N3/0
(31) Priority Document No	:NA
(32) Priority Date	:NA
(33) Name of priority country	:NA
(86) International Application No	:NA
Filing Date	:NA
(87) International Publication No	:N/A
(61) Patent of Addition to Application Number	:NA
Filing Date	:NA
(62) Divisional to Application Number	:NA
Filing Date	:NA

(71)**Name of Applicant :**
1)SUTHAR PRAKASHKUMAR NARMADASHANKAR
Address of Applicant :54, WEST WIND CHS LIMITED, 3RD CROSS ROAD,LOKHANDWALA COMPLEX,ANDHERI(WEST),MUMBAI- 400 053, MAHARASHTRA, INDIA.
(72)**Name of Inventor :**
1)SUTHAR PRAKASHKUMAR NARMADASHANKAR

(57) Abstract :
A process for manufacturing wooden billets, baseball bats and billiard/snooker cues is disclosed. The process comprises softening the hardwoods and willow, which are typically North American Hardwoods and English and Kashmir willow having moisture content between 30 - 70%, by steaming, and then compressing the softened hardwoods and willow by longitudinal compression processes along the length to cause the axial fibres to cross-link. The process aims at providing wooden billets, baseball bats and snooker cues having uniform performance standardization, improvement in durability, strength, acceptability, anti-breakage and flexibility.

No. of Pages : 18 No. of Claims : 6

(12) PATENT APPLICATION PUBLICATION
(19) INDIA
(22) Date of filing of Application :01/11/2012
(21) Application No.2499/MUMNP/2012 A
(43) Publication Date : 31/01/2014

(54) Title of the invention : EXCIPIENT FROM TRIGONELLA FOENUM GRACEUM SEEDS AND PROCESS FOR PREPARATION THEREOF

(51) International classification	:A23L1/36,A61K8/97,A61K31/736
(31) Priority Document No	:1152/MUM/2010
(32) Priority Date	:06/04/2010
(33) Name of priority country	:India
(86) International Application No	:PCT/IB2011/000744
Filing Date	:06/04/2011
(87) International Publication No	:WO 2011/124973
(61) Patent of Addition to Application Number	:NA
Filing Date	:NA
(62) Divisional to Application Number	:NA
Filing Date	:NA

(71)**Name of Applicant :**
1)RUBICON RESEARCH PRIVATE LIMITED
Address of Applicant :221 Annexe Building Goregaon Mulund Link Road Opposite Indira Container Yard Off L.B.S. Marg Bhandup (West) Mumbai 400 078 Maharashtra India
(72)**Name of Inventor :**
1)PILGAONKAR Pratibha Sudhir
2)RUSTOMJEE Maharukh Tehmasp
3)GANDHI Anilkumar Surendrakumar

(57) Abstract :
An excipient from Trigonella foenum-graceum seeds and a process for preparation thereof is disclosed. The excipient obtained from Trigonella foenum-graceum seeds, comprising insoluble and soluble dietary fibers can be used in various phar maceutical or cosmetic compositions and food, nutritional or dietary preparations.

No. of Pages : 43 No. of Claims : 17

(12) PATENT APPLICATION PUBLICATION
(19) INDIA
(22) Date of filing of Application :14/12/2012
(21) Application No.2785/MUMNP/2012 A
(43) Publication Date : 31/01/2014

(54) Title of the invention : GRAIN ORIENTED ELECTRICAL STEEL SHEET

(51) International classification :C22C38/00,C21D8/12
(31) Priority Document No :2010-177629
(32) Priority Date :06/08/2010
(33) Name of priority country :Japan
(86) International Application No :PCT/JP2011/004448
Filing Date :04/08/2011
(87) International Publication No :WO/2012/017675
(61) Patent of Addition to Application Number :NA
Filing Date :NA
(62) Divisional to Application Number :NA
Filing Date :NA

(71)**Name of Applicant :**
1)JFE STEEL CORPORATION
Address of Applicant :2-3 Uchisaiwai-cho 2-chome Chiyoda-ku Tokyo 1000011 Japan.
(72)**Name of Inventor :**
1)YAMAGUCHI Hiroi
2)OKABE Seiji
3)OMURA Takeshi
4)NAKANISHI Tadashi

(57) Abstract :
Provided is an oriented electromagnetic steel plate with a magnetic domain structure that has been changed by the introduction of a distortion without traces of processing, and wherein noise generated when said oriented electromagnetic steel plate is used laminated on a transformer iron core is effectively suppressed by: setting a magnetic flux density (B8) to 1.92 T or greater; then setting the ratio between an average magnetic domain width (W0) prior to distortion-introducing processing and the average magnetic domain width (Wa) of a processing surface after distortion-introducing processing to Wa/W0<0.4; setting the ratio between an average magnetic domain width (Wb) in an unprocessed surface and Wa to Wa/Wb>0.7; setting the ratio between an average width (Wc) for a magnetic domain non-continuous section in the processing surface as a result of distortion-introduction processing and an average width (Wd) for the magnetic domain non-continuous section in the unprocessed surface to Wd/Wc>0.8; and setting Wc<0.35.

No. of Pages : 22 No. of Claims : 3

(12) PATENT APPLICATION PUBLICATION
(19) INDIA
(22) Date of filing of Application :14/12/2012
(21) Application No.2786/MUMNP/2012 A
(43) Publication Date : 31/01/2014

(54) Title of the invention : GRAIN ORIENTED ELECTRICAL STEEL SHEET AND METHOD FOR MANUFACTURING THE SAME

(51) International classification :C22C38/00,B21B3/02
(31) Priority Document No :2010-150404
(32) Priority Date :30/06/2010
(33) Name of priority country :Japan
(86) International Application No :PCT/JP2011/003685
Filing Date :28/06/2011
(87) International Publication No :WO/2012/001953
(61) Patent of Addition to Application Number :NA
Filing Date :NA
(62) Divisional to Application Number :NA
Filing Date :NA

(71)**Name of Applicant :**
1)JFE STEEL CORPORATION
Address of Applicant :2-3 Uchisaiwai-cho 2-chome Chiyoda-ku Tokyo 1000011 Japan.
(72)**Name of Inventor :**
1)YAMAGUCHI Hiroi
2)TODA Hiroaki
3)OMURA Takeshi
4)OKABE Seiji

(57) Abstract :
The present invention proposes in manufacturing a grain oriented electrical steel sheet : (1) suppressing content of Cr in the grain oriented electrical steel sheet to 0.1 mass % or less; (2) setting coating weight of forsterite coating in terms of basis weight of oxygen therein to be at least 3.0 g/m2 and thickness of an anchor portion as a lower portion of forsterite coating to be 1.5 m or less; and (3) controllably setting magnitude of deflection of a test specimen having length: 280 mm to be at least 10 mm when forsterite coating is provided on only one surface thereof and at least 20 mm when forsterite coating and the tension coating are provided on the surface. According to the present invention there can be provided a grain oriented electrical steel sheet causing an improved iron-loss reducing effect in reducing iron loss through laser irradiation.

No. of Pages : 25 No. of Claims : 3

(12) PATENT APPLICATION PUBLICATION
(19) INDIA
(22) Date of filing of Application :14/12/2012
(21) Application No.2787/MUMNP/2012 A
(43) Publication Date : 31/01/2014

(54) Title of the invention : MAGNETIC STEEL SHEET WITH SEMI-ORGANIC INSULATION COATING FILM

(51) International classification :C23C22/00,B32B15/08
(31) Priority Document No :2010-165380
(32) Priority Date :22/07/2010
(33) Name of priority country :Japan
(86) International Application No :PCT/JP2011/004123
Filing Date :21/07/2011
(87) International Publication No :WO/2012/011286
(61) Patent of Addition to Application Number :NA
Filing Date :NA
(62) Divisional to Application Number :NA
Filing Date :NA

(71)**Name of Applicant :**
1)JFE STEEL CORPORATION
Address of Applicant :2-3 Uchisaiwai-cho 2-chome Chiyoda-ku Tokyo 1000011 Japan.
(72)**Name of Inventor :**
1)SASHI Kazumichi
2)OGATA Hiroyuki
3)TADA Chiyoko
4)NAKAGAWA Nobuko
5)FUJIBAYASHI Nobue
6)SHIGEKUNI Tomofumi
7)SASAKI Kenichi

(57) Abstract :
In a semi-organic insulation coating comprising an inorganic component and an organic resin a Zr compound and an Si compound containing a plate-like silica as an inorganic component are included in a ratio in a dry coating of 20 to 70 mass% of Zr compound (converted to ZrO2) and 10 to 50 mass% of Si compound containing plate-like silica (converted to SiO2) and the remainder is substantially an organic resin whereby there can be provided a magnetic steel sheet with a semi-organic insulation coating having no deterioration of corrosion resistance and water resistance without containing a chromium compound and being excellent in the powdering resistance scratch resistance sticking resistance TIG weldability and punchability but also the coating appearance.

No. of Pages : 29 No. of Claims : 5

(12) PATENT APPLICATION PUBLICATION
(19) INDIA
(22) Date of filing of Application :15/12/2012
(21) Application No.2788/MUMNP/2012 A
(43) Publication Date : 31/01/2014

(54) Title of the invention : FACILITY FOR PRODUCING ELECTRICAL ENERGY FROM WIND

(51) International classification :F03D3/04
(31) Priority Document No :61/397,665 (US)
(32) Priority Date :15/06/2010
(33) Name of priority country :U.S.A.
(86) International Application No :PCT/US2011/040596
Filing Date :15/06/2011
(87) International Publication No :WO/2011/159848
(61) Patent of Addition to Application Number :NA
Filing Date :NA
(62) Divisional to Application Number :NA
Filing Date :NA

(71)**Name of Applicant :**
1)BAKER Brookes H.
Address of Applicant :5 Chelsea Dr. Fort Worth Texas 76134 UNITED STATES OF AMERICA
(72)**Name of Inventor :**
1)BAKER Brookes H.

(57) Abstract :
A facility for producing electrical energy has a plurality of shrouds a plurality of wind turbines a power system a plurality of modules a pivotal mounting system and a support structure. Each shroud has a throat which increases the velocity of the prevailing wind passing through the shroud. The plurality of wind turbines are each operably positioned in the throat of one of the plurality of shrouds. The power system is adapted for converting mechanical energy from the plurality of wind turbines to electrical energy. The support tower includes a central tower for supporting the shrouds and wind turbines above the surface and may further include peripheral towers guys and/or other structural components.

No. of Pages : 50 No. of Claims : 17

(12) PATENT APPLICATION PUBLICATION
(19) INDIA
(22) Date of filing of Application :15/12/2012
(21) Application No.2789/MUMNP/2012 A
(43) Publication Date : 31/01/2014

(54) Title of the invention : LID FOR GLASS BOTTLES

(51) International classification :B65D41/16,B65D41/00
(31) Priority Document No :P201000971
(32) Priority Date :27/07/2010
(33) Name of priority country :Spain
(86) International Application No :PCT/ES2011/000238
Filing Date :26/07/2011
(87) International Publication No :WO/2012/013839
(61) Patent of Addition to Application Number :NA
Filing Date :NA
(62) Divisional to Application Number :NA
Filing Date :NA

(71)**Name of Applicant :**
1)CLIPPS ALUMINIUM SYSTEMS S.L.
Address of Applicant :C/ Fray Junpero Serra 70 pta. 23 E-46014 Valencia Spain
2)ACTIVO MARK S.L.
(72)**Name of Inventor :**
1)MARTINEZ RAMIREZ Vicente
2)MOYA ALISES Hip³lito

(57) Abstract :
The present invention relates to a lid for glass bottles preferably made of metal or any other type of suitable plastic material comprising a body (1) with a skirt or external flange (2) that is segmented by conical slits characterised in that said flange (2) comprises a plurality of longitudinal conical slits transverse to the axis of the lid and running around the periphery of the flange (2) designed to snugly fit over the external surface of the lip (4) of the neck (3) of the bottle to be sealed; the body (1) having been provided with a concentric V-shaped annular rib (5) which snugly fits against the internal contour of the mouth of the neck (3) of the bottle which has a liner (7) said rib (5) defining an upwardly domed surface (6).

No. of Pages : 8 No. of Claims : 2

(12) PATENT APPLICATION PUBLICATION
(19) INDIA
(22) Date of filing of Application :10/01/2012
(21) Application No.105/CHE/2012 A
(43) Publication Date : 31/01/2014

(54) Title of the invention : MUTATED CEPHALOSPORIN HYDROXYLASE AND ITS APPLICATION IN DEACETYL CEPHALOSPORANIC ACID SYNTHESIS

(51) International classification	:C12N, C12P
(31) Priority Document No	:NA
(32) Priority Date	:NA
(33) Name of priority country	:NA
(86) International Application No	:NA
Filing Date	:NA
(87) International Publication No	: NA
(61) Patent of Addition to Application Number	:NA
Filing Date	:NA
(62) Divisional to Application Number	:NA
Filing Date	:NA

(71)**Name of Applicant :**
1)ORCHID CHEMICALS & PHARMACEUTICALS LTD
Address of Applicant :ORCHID TOWERS, 313, VALLUVAR KOTTAM HIGH ROAD, NUNGAMBAKKAM, CHENNAI - 600 034 Tamil Nadu India
(72)**Name of Inventor :**
1)MICHEAL DURAIRAAJ
2)THIRUMOORTHY RAMANAN
3)MISHRA KANHU CHARAN
4)CHINNATHAMBI THANGADURAI
5)KRISHNAN CAVERY MANIAN
6)RAJASEKARAN PADMA
7)SUBRAMANI SUGUMAR
8)SEL VARAJ KAVITHA DAFFROSE
9)BALAKRISHNAN NATARAJ
10)RAVIKUMAR CHAKRAVARTHY SATHISH

(57) Abstract :
The present invention relates to a mutant hydroxylase with increased activity and greater substrate specificity towards phenylacetyl-7-ADCA derivatives for the production of phenylacetyl-7-HACA derivatives, which carries one or more amino acid modification at residue positions when compared with the wild type hydroxylase from the following group of residues, Proline at position 7, Alanine at position 40, Threonine 51, Methionine at position 53, Glutamic acid at position 82, Arginine at position 91, Threonine at position 96, Glycine at position 108, Isoleucine at position 149, Valine at position 171, Alanine at position 177, Arginine at position 182, Methioinine at position 184, Isoleucine at position 193, Phenylalanine at position 195, Glutamine at position 209, Alanine at position 210, Valine at position 226, Methionine at position 233, Leucine at position 236, Alanine at position 237, Alanine at position 241, Valine at position 249, Arginine at position 250, Serine at position 251, Glycine at position 255, Glutamic Acid at position 258, Serine at position 260, Phenylalanine at position 267, Alanine at position 280, Valine at position 307 and Asparagine at position 313.. The invention further provides a process for the preparation of deacetyl cephalosporanic acid from the corresponding deacetoxy cephalosporanic acid using an enzyme of the present invention. The invention also provides the method for producing and processing of such enzymes.

No. of Pages : 57 No. of Claims : 17

(12) PATENT APPLICATION PUBLICATION
(19) INDIA
(22) Date of filing of Application :28/12/2010
(21) Application No.3990/CHE/2010 A
(43) Publication Date : 31/01/2014

(54) Title of the invention : A SUSPENSION SYSTEM FOR A VEHICLE

(51) International classification :B60G3/00
(31) Priority Document No :NA
(32) Priority Date :NA
(33) Name of priority country :NA
(86) International Application No :NA
Filing Date :NA
(87) International Publication No : NA
(61) Patent of Addition to Application Number :NA
Filing Date :NA
(62) Divisional to Application Number :NA
Filing Date :NA

(71)**Name of Applicant :**
1)BAJAJ AUTO LIMITED
Address of Applicant :LOCAL BUSINESS ADDRESS:-NEW NO. 6, OLD NO. 157, II FLOOR, HABIBULLAH ROAD, T. NAGAR, CHENNAI - 600 017 Tamil Nadu India
(72)**Name of Inventor :**
1)UPADHYAY PRASHANT PREMNATH
2)KSHIRSAGAR ROHAN CHANDRASHEKHAR
3)SHARAN ADTIYA ARUN

(57) Abstract :
A suspension system (10) for a steered vehicle having a chassis with each wheel (40) of a pair of wheels being rotatably mounted to an axle connected to the vehicle chassis. Each wheel (40) is steerable by a steering system including a steering mechanism connected to the wheel and is provided with a suspension means of double arm type extending longitudinally. Thus, each suspension means (15) comprises vertically disposed upper and lower arms (11,12) extending parallel to a longitudinal axis or plane of the vehicle. Upper and lower arms (11,12) of the suspension means (15) are pivotally connected by a vertical link (14) to form a suspension assembly located outboard of each wheel (40) and wheel track for the vehicle. The vertical link (14 is operatively connected to the steering mechanism (65) and defines a steering axis (610) located outboard of each wheel (40). Vertical link (14) is connected to steering mechanism by a simple linkage arrangement (23, 24, 25, 26) including tie rods (23) which overlap each wheel (40). Such linkage arrangement (23, 24, 25, 26) allows a beneficial operative connection between steering mechanism (65) and wheel (40).

No. of Pages : 29 No. of Claims : 23

(12) PATENT APPLICATION PUBLICATION
(19) INDIA
(22) Date of filing of Application :28/12/2010
(21) Application No.3991/CHE/2010 A
(43) Publication Date : 31/01/2014

(54) Title of the invention : SUSPENSION AND STEERING MODULES FOR A VEHICLE

(51) International classification :B60G
(31) Priority Document No :NA
(32) Priority Date :NA
(33) Name of priority country :NA
(86) International Application No :NA
Filing Date :NA
(87) International Publication No : NA
(61) Patent of Addition to Application Number :NA
Filing Date :NA
(62) Divisional to Application Number :NA
Filing Date :NA

(71)**Name of Applicant :**
1)BAJAJ AUTO LIMITED
Address of Applicant :LOCAL BUSINESS ADDRESS:-NEW NO. 6, OLD NO. 157, II FLOOR, HABIBULLAH ROAD, T. NAGAR, CHENNAI - 600 017 Tamil Nadu India
(72)**Name of Inventor :**
1)UPADHYAY PRASHANT PREMNATH
2)KSHIRSAGAR ROHAN CHANDRASHEKHAR
3)SHARAN ADTIYA ARUN

(57) Abstract :
A suspension module (10) for a wheeled vehicle, the module (10) being connectable to a vehicle body frame (90) and comprising a suspension assembly (15) for each wheel of a pair of wheels, for example of front wheels, of the vehicle with suspension components (11,12) commonised so that the module (10) provides for location of the same suspension assembly (15) either outboard or inboard of each wheel (40) of the vehicle. The suspension module (10) may also be connected to a vehicle steering module (65) which comprises steering components at least substantially commonised so that the steering module (65) provides for location of the same suspension assembly (15) outboard or inboard of each wheel (40) of the vehicle. Manufacturing and inventory costs are potentially reduced by the ability to use the same suspension and steering modules (10, 65) to construct a vehicle irrespective of vehicle track and irrespective of location of suspension assembly (15) inboard or outboard of vehicle wheels (40).

No. of Pages : 35 No. of Claims : 36

(12) PATENT APPLICATION PUBLICATION
(19) INDIA
(22) Date of filing of Application :29/03/2012
(21) Application No.1210/CHE/2012 A
(43) Publication Date : 31/01/2014

(54) Title of the invention : INDUCTION SYSTEM FOR AN INTERNAL COMBUSTION ENGINE

(51) International classification :F02M,H02P
(31) Priority Document No :NA
(32) Priority Date :NA
(33) Name of priority country :NA
(86) International Application No :NA
Filing Date :NA
(87) International Publication No : NA
(61) Patent of Addition to Application Number :NA
Filing Date :NA
(62) Divisional to Application Number :NA
Filing Date :NA

(71)**Name of Applicant :**
1)TVS MOTOR COMPANY LIMITED
Address of Applicant :JAYALAKSHMI ESTATES NO.29(OLD NO.8) HADDOWS ROAD, CHENNAI 600 006 Tamil Nadu India
(72)**Name of Inventor :**
1)YEMALURU RAMACHANRA BABU
2)ANUKKAVOOR SUBRAMANIAN ANBUKKARASU
3)KANNAN PRABHU

(57) Abstract :
An induction system for an internal combustion engine for a vehicle is described. The present invention provides a gas supply nozzle 201 having a tube 202 provided with hole(s) 202a and is connected to gas regulator 206; and an air intake path 204; wherein the gas supply nozzle 201 is placed across the airflow path in air intake path 204 at tube outlet 203; and wherein the tube 202 draws gas and delivers it through the holes 202a.

No. of Pages : 13 No. of Claims : 6

(12) PATENT APPLICATION PUBLICATION
(19) INDIA
(22) Date of filing of Application :26/05/2009
(21) Application No.1212/CHE/2009 A
(43) Publication Date : 31/01/2014

(54) Title of the invention : COMPACT WAVEGUIDE COUPLER

(51) International classification :H01P5/00
(31) Priority Document No :NA
(32) Priority Date :NA
(33) Name of priority country :NA
(86) International Application No :NA
Filing Date :NA
(87) International Publication No : NA
(61) Patent of Addition to Application Number :NA
Filing Date :NA
(62) Divisional to Application Number :NA
Filing Date :NA

(71)**Name of Applicant :**
1)DEPARTMENT OF SPACE, INDIAN SPACE RESEARCH ORGANIZATION (ISRO)
Address of Applicant :ANTARIKSH BHAVAN, ISRO HQ, NEW BEL ROAD BANGALORE 560 094 Karnataka India
(72)**Name of Inventor :**
1)A. BHASKARANARAYANAN
2)S.B.SHARMA
3)S.B.CHAKRABARTY
4)RANAJIT DEV

(57) Abstract :
The subject matter described herein relates to a waveguide coupler of reduced length for coupling electromagnetic power from a primary waveguide to a secondary waveguide. Each of the waveguide interacts along a common wall. One transverse slot and one longitudinal slot are formed on the common wall of the waveguide coupler. The transverse slot in conjunction with the longitudinal slot forms a Jerusalem configuration to couple the electromagnetic power from the primary waveguide to the secondary waveguide.

No. of Pages : 15 No. of Claims : 4

(12) PATENT APPLICATION PUBLICATION
(19) INDIA
(22) Date of filing of Application :12/07/2011
(21) Application No.2384/CHE/2011 A
(43) Publication Date : 31/01/2014

(54) Title of the invention : AN ASSEMBLY AND METHOD FOR CHANGING POSITION OF A PANEL IN A CABINET

(51) International classification :E05B
(31) Priority Document No :NA
(32) Priority Date :NA
(33) Name of priority country :NA
(86) International Application No :NA
Filing Date :NA
(87) International Publication No : NA
(61) Patent of Addition to Application Number :NA
Filing Date :NA
(62) Divisional to Application Number :NA
Filing Date :NA

(71)**Name of Applicant :**
1)SCHNEIDER ELECTRIC INDUSTRIES SAS
Address of Applicant :35, RUE JOSEPH MONIER, F-92500 RUEIL MALMAISON France
(72)**Name of Inventor :**
1)NAVEEN, JESURAJ
2)YATHINDRA, BHAT
3)THIBAULT, DURAND-ALIKER

(57) Abstract :
An assembly and method for changing position of a panel in a cabinet The present invention relates to an assembly and method for changing position of a panel in a cabinet. The assembly comprises brackets (20) formed of a first flange member (22) through which the brackets are attached to the cabinet, and a second flange member (24) having protruding members (24a) and at least one aperture (26). A panel (30) is formed of sliding flange members (34) that is arranged with a set of apertures (36). Locking units (10) are configured with a base portion (12), latch portions (14) and projection members (16). The panel and the brackets are assembled together in such a way that the sliding flange members of the panel slide through the protruding members of the brackets. Once at least one of the apertures in the panel is aligned with the aperture in the brackets in relation with a desired position of the panel, the locking units are positioned and inserted into the aligned apertures, such that the locking units are engaged with the panel and the brackets to lock the panel and the brackets together in the desired position. Such assembly facilitates interchangeability of the panel from flush to recessed position or vice versa in the cabinet in an easy and rapid manner and without using any additional tools.

No. of Pages : 19 No. of Claims : 11

(12) PATENT APPLICATION PUBLICATION
(19) INDIA
(22) Date of filing of Application :31/12/2010
(21) Application No.4050/CHE/2010 A
(43) Publication Date : 31/01/2014

(54) Title of the invention : FRAME FOR A SCOOTER TYPE VEHICLE

(51) International classification :B62K11/00
(31) Priority Document No :NA
(32) Priority Date :NA
(33) Name of priority country :NA
(86) International Application No :NA
Filing Date :NA
(87) International Publication No : NA
(61) Patent of Addition to Application Number :NA
Filing Date :NA
(62) Divisional to Application Number :NA
Filing Date :NA

(71)**Name of Applicant :**
1)TVS MOTOR COMPANY LIMITED
Address of Applicant :JAYALAKSHMI ESTATES, NO.29, (OLD NO.8) HADDOWS ROAD, CHENNAI - 600 006 Tamil Nadu India
(72)**Name of Inventor :**
1)MOHAN GANGADURAI
2)AMIT JAIN
3)VENKATA MANGARAJU KARANAM
4)RENGARAJAN BABU

(57) Abstract :
Present invention provides a frame for a scooter type vehicle with a head tube member, a closed front frame member and a rear frame member. Said rear frame member has a right rear frame member, a left rear frame member connected through multiple connecting bridges and extends into said closed front frame member such that front frame member rear cover is secured between extended parts of right rear frame member and left rear frame member.

No. of Pages : 15 No. of Claims : 6

(12) PATENT APPLICATION PUBLICATION
(19) INDIA
(22) Date of filing of Application :31/12/2010
(21) Application No.4051/CHE/2010 A
(43) Publication Date : 31/01/2014

(54) Title of the invention : TRANSMISSION SYSTEM FOR A MOTORCYCLE

(51) International classification :B60K17/00
(31) Priority Document No :NA
(32) Priority Date :NA
(33) Name of priority country :NA
(86) International Application No :NA
Filing Date :NA
(87) International Publication No : NA
(61) Patent of Addition to Application Number :NA
Filing Date :NA
(62) Divisional to Application Number :NA
Filing Date :NA

(71)**Name of Applicant :**
1)TVS MOTOR COMPANY LIMITED
Address of Applicant :JAYALAKSHMI ESTATES, NO.29, (OLD NO.8) HADDOWS ROAD, CHENNAI - 600 006 Tamil Nadu India
(72)**Name of Inventor :**
1)CHITHAMBARAM SUBRAMONIAM
2)DURGA SHANKAR GUPTA

(57) Abstract :
A drive gear is located on the drive shaft for rotation thereby and an axle gear is located on the rear axle for driving the rear axle. A pinion shaft is provided and supported by a housing so as to be rotatable about its longitudinal axis, the pinion shaft having a front pinion gear meshing with the drive gear and a rear pinion gear meshing with the axle gear so that when the drive shaft is driven by the engine wherein, the drive gear is a multi-strut worm gear and front pinion gear meshing with the drive gear is a corresponding worm wheel, the axle gear and the rear pinion gear are bevel gears forming a bevel gear pair.

No. of Pages : 12 No. of Claims : 2

(12) PATENT APPLICATION PUBLICATION
(19) INDIA
(22) Date of filing of Application :09/07/2009
(21) Application No.4038/CHENP/2009 A
(43) Publication Date : 31/01/2014

(54) Title of the invention : OPERATING MACHINE FOR FILLING AND CLOSING CONTAINERS

(51) International classification :B65B7/28
(31) Priority Document No :10 2006 058 752.9
(32) Priority Date :12/12/2006
(33) Name of priority country :Germany
(86) International Application No :PCT/EP2007/060911
Filing Date :12/10/2007
(87) International Publication No :WO 2008/071474
(61) Patent of Addition to Application Number :NA
Filing Date :NA
(62) Divisional to Application Number :NA
Filing Date :NA

(71)**Name of Applicant :**
1)ROBERT BOSCH GMBH
Address of Applicant :POSTFACH 30 02 20, 70442 STUTTGART, Germany
(72)**Name of Inventor :**
1)KRAUSS, ULRICH,
2)MAYER, WERNER,

(57) Abstract :
The present invention relates to an operating machine, particularly a cyclically operating machine, for filling containers (5) and closing the containers (5) with caps (4), comprising a closure station (1) having a cap feeder (2) for feeding the caps (4) to the containers (5) and having a sorting device (3) for aligning and separating the caps (4) and transferring caps (4) to the cap feeder (2), wherein the cap feeder (2) positions the caps (4) individually on a respective container (5) and closes the container with the cap (4), and wherein the cap feeder (2) is arranged such that the cap feeder (2) can be moved back and forth, and it comprises a drive which is designed for moving the cap feeder (2).

No. of Pages : 16 No. of Claims : 12

(12) PATENT APPLICATION PUBLICATION
(19) INDIA
(22) Date of filing of Application :09/07/2009
(21) Application No.4040/CHENP/2009 A
(43) Publication Date : 31/01/2014

(54) Title of the invention : COGNITIVE MULTI-USER OFDMA

(51) International classification :H04B7/208
(31) Priority Document No :11/637,449
(32) Priority Date :12/12/2006
(33) Name of priority country :U.S.A.
(86) International Application No :PCT/US2007/085556
Filing Date :27/11/2007
(87) International Publication No :WO 2008/073697
(61) Patent of Addition to Application Number :NA
Filing Date :NA
(62) Divisional to Application Number :NA
Filing Date :NA

(71)**Name of Applicant :**
1)MICROSOFT CORPORATION.,
Address of Applicant :ONE MICROFT WAY, REDMOND, WASHINGTON 98052-6399 U.S.A.
(72)**Name of Inventor :**
1)HASSAN, AMER A
2)HUITEMA, CHRISTIAN,

(57) Abstract :
A computing device operating according to a frequency division multiplexed protocol in which communication occurs over a signal formed from a plurality of sub-channels selected from anywhere in a frequency spectrum. A computing device may select sub-channels cognitively by using information about sub-channels previously deemed suitable or unsuitable by that computing device or other computing devices. A described technique for determining sub-channel suitability includes analyzing radio frequency energy in the sub-channel to detect signals generated by another computing device or high noise levels. Information may also be used to cognitively select sub-channels to be analyzed, such as by selecting for analysis previously-used sub-channels.

No. of Pages : 30 No. of Claims : 20

(12) PATENT APPLICATION PUBLICATION
(19) INDIA
(22) Date of filing of Application :27/12/2011
(21) Application No.4603/CHE/2011 A
(43) Publication Date : 31/01/2014

(54) Title of the invention : A CABIN MODULE

(51) International classification :B60H
(31) Priority Document No :NA
(32) Priority Date :NA
(33) Name of priority country :NA
(86) International Application No :NA
Filing Date :NA
(87) International Publication No : NA
(61) Patent of Addition to Application Number :NA
Filing Date :NA
(62) Divisional to Application Number :NA
Filing Date :NA

(71)**Name of Applicant :**
1)BAJAJ AUTO LIMITED
Address of Applicant :2ND & 3RD FLOOR, KHIVRAJ BUILDING, NO.616, ANNASALAI, CHENNAI - 600 006 Tamil Nadu India
(72)**Name of Inventor :**
1)JOSEPH ABRAHAM
2)UPADHYAY PRASHANT
3)SHARAN ADTIYA ARUN
4)WANJARI LALIT NIVRUTTI

(57) Abstract :
A cabin module (100, 100a) forming at least part of a cabin structure for a vehicle (1000,1000a) comprises structural members (116,118,130; 116a, 118a, 130a, 150) defining part of the cabin structure. Cabin module (100, 100a) or structural members (116, 118, 130; 116a, 118a, 130a, 150) are connectable to a plurality of vehicle component modules (400; 300a, 400a) for vehicle assembly. Vehicle component modules (400;300a,400a) connectable to the cabin module (100, 100a) or its structural members are selected from the group consisting of vehicle component modules for three wheel vehicles (400) and vehicle component modules for four wheel vehicles (300a, 400a). Conveniently, the vehicle component modules comprise steering system modules (400, 400a) and suspension system modules (300a). The cabin module provides an ergonomic seat position (900, 900a) common for both three and four wheel vehicles (1000,1000a).

No. of Pages : 29 No. of Claims : 22

(12) PATENT APPLICATION PUBLICATION
(19) INDIA
(22) Date of filing of Application :03/09/2012

(21) Application No.7564/CHENP/2012 A
(43) Publication Date : 31/01/2014

(54) Title of the invention : DATABASE BACKING-UP AND RECOVERING METHOD AND DEVICE

(51) International classification :G06F 17/30
(31) Priority Document No :201010233924.8
(32) Priority Date :20/07/2010
(33) Name of priority country :China
(86) International Application No :PCT/CN2010/078972
Filing Date :22/11/2010
(87) International Publication No : NA
(61) Patent of Addition to Application Number :NA
Filing Date :NA
(62) Divisional to Application Number :NA
Filing Date :NA

(71)**Name of Applicant :**
1)ZTE CORPORATION
Address of Applicant :ZTE Plaza Keji Road South Hi-Tech Industrial Park Nanshan District Shenzhen Guangdong Province 518057 China
(72)**Name of Inventor :**
1)TAO LONG

(57) Abstract :
A method and an apparatus for recovering a database backup is provided by the present invention, wherein the method comprises: backing up an old version database, wherein table structures of the old version database are stored; clearing records of all tables in a new version database, and acquiring table structures of the new version database; comparing the table structures of the old version database with the table structures of the new version database, and determining that the table structures changes; and recovering a backup of the old version database into the new version database according to a type of the change and a corresponding preset strategy. The; forward compatibility of database backup recovery is achieved by the present invention.

No. of Pages : 24 No. of Claims : 11

(12) PATENT APPLICATION PUBLICATION
(19) INDIA
(22) Date of filing of Application :28/08/2012
(21) Application No.3549/CHE/2012 A
(43) Publication Date : 31/01/2014

(54) Title of the invention : FLEXIBLE TUBULAR MOULDED BODY, SUCH AS BELLOWS, AND METHOD FOR THE MANUFACTURE THEREOF

(51) International classification :F16L
(31) Priority Document No :12178108.2
(32) Priority Date :26/07/2012
(33) Name of priority country :EPO
(86) International Application No :NA
Filing Date :NA
(87) International Publication No : NA
(61) Patent of Addition to Application Number :NA
Filing Date :NA
(62) Divisional to Application Number :NA
Filing Date :NA

(71)**Name of Applicant :**
1)MATZEN, RALPH-GUNTHER
Address of Applicant :MAX-JENNE-STRABE 16-20, 21337, LUNEBURG Germany
(72)**Name of Inventor :**
1)MATZEN, RALPH-GUNTHER

(57) Abstract :
The flexible tubular moulded body (10) comprises an unprofiled or profiled straight or bent shaped and a circumferential wall (11) provided with a corrugated profile (12), which is formed from a strength support insert embedded in a thermoplastic material comprising cord surfaces running in the longitudinal direction of the moulded body as pressure support elements and fixing threads running transversely to the threads and holding these in position.

No. of Pages : 70 No. of Claims : 15

(12) PATENT APPLICATION PUBLICATION
(19) INDIA
(22) Date of filing of Application :18/02/2011
(21) Application No.465/CHE/2011 A
(43) Publication Date : 31/01/2014

(54) Title of the invention : STENT GRAFT WITH STAGEERED RINGS

(51) International classification :A61F
(31) Priority Document No :NA
(32) Priority Date :NA
(33) Name of priority country :NA
(86) International Application No :NA
Filing Date :NA
(87) International Publication No : NA
(61) Patent of Addition to Application Number :NA
Filing Date :NA
(62) Divisional to Application Number :NA
Filing Date :NA

(71)**Name of Applicant :**
1)AGADA MEDICAL TECHNOLOGIES
Address of Applicant :NO.104/5, ARIHANT VTN SQUARE G.N. CHETTY ROAD T. NAGAR, CHENNAI-600 017. Tamil Nadu India
(72)**Name of Inventor :**
1)DR. MOHAN THANIKACHALAM
2)DR. RAMANATHAN
3)MRS. LAKSHMI GOPAL
4)MS. JOHANNA RAJAN
5)MS. KIRITHIGHA SHANMUGHAM

(57) Abstract :
The invention relates to a stent graft device that includes a tubular body having a proximal end, a distal end and a middle region. The proximal end of the tubular body in particular would require rings that would need to be placed in such a manner that it affixes firmly to the vessel wall for a good seal so as to prevent endoleaks. The invention relies on the number of struts present in a ring and the amplitude of the strut to provide enough radial force to achieve good fixation. Thus, the stent graft according to the present invention avoids the tapered ends, or the presence of hooks, barbs etc. to ensure that proximal fixation is strong and in turn resists migration of the device with the blood flow.

No. of Pages : 22 No. of Claims : 6

(12) PATENT APPLICATION PUBLICATION
(19) INDIA
(22) Date of filing of Application :03/09/2012
(21) Application No.7608/CHENP/2012 A
(43) Publication Date : 31/01/2014

(54) Title of the invention : PYROELECTRIC INFRARED DETECTION ELEMENT AND INFRARED SENSOR USING THE SAME

(51) International classification :G01J 1/02
(31) Priority Document No :2010-145393
(32) Priority Date :25/06/2010
(33) Name of priority country :Japan
(86) International Application No :PCT/JP2011/064348
Filing Date :23/06/2011
(87) International Publication No : NA
(61) Patent of Addition to Application Number :NA
Filing Date :NA
(62) Divisional to Application Number :NA
Filing Date :NA

(71)**Name of Applicant :**
1)Panasonic Corporation
Address of Applicant :1006 Oaza Kadoma Kadoma-shi Osaka 571-8501 Japan
(72)**Name of Inventor :**
1)Takahiro SONO
2)Teruki HATATANI
3)Suguru FUKUI
4)Takayuki NISHIKAWA

(57) Abstract :
The pyroelectric infrared detection element has a pyroelectric element including a first electrode and a second electrode opposite to each other and an infrared absorption part. The first electrode and the second electrode are formed on a first surface and a second surface of a pyroelectric substrate in a thickness direction, respectively. The pyroelectric infrared detection element further includes an output terminal unit including a first output terminal and a second output terminal formed on the pyroelectric substrate, a first wiring part designed to connect the first output terminal to the first electrode, and a second wiring part designed to connect the second output terminal to the second electrode. The first wiring part includes a connecting line which is an electrically conductive layer formed on the first surface so as to connect the first output terminal to the first electrode, and a canceling line designed to cancel electric charges generated at the connecting line in response to a change in a temperature of the pyroelectric substrate. The canceling line is an electrically conductive layer formed on the second surface so as to be electrically insulated from the second electrode and to be electrically connected to the connecting line.

No. of Pages : 74 No. of Claims : 11

(12) PATENT APPLICATION PUBLICATION
(19) INDIA
(22) Date of filing of Application :03/09/2012
(21) Application No.7609/CHENP/2012 A
(43) Publication Date : 31/01/2014

(54) Title of the invention : CONCRETE PUMPING STRUCTURE AND CONTROL METHOD THEREOF

(51) International classification :F04B 9/113
(31) Priority Document No :201010125240.6
(32) Priority Date :16/03/2010
(33) Name of priority country :China
(86) International Application No :PCT/CN2011/071872
Filing Date :16/03/2011
(87) International Publication No : NA
(61) Patent of Addition to Application Number :NA
Filing Date :NA
(62) Divisional to Application Number :NA
Filing Date :NA

(71)**Name of Applicant :**
1)HUNAN SANY INTELLIGENT CONTROL EQUIPMENT CO. LTD.
Address of Applicant :Sany Industry Town Economic and Technological Development Zone Changsha Hunan 410100 China
2)SANY HEAVY INDUSTRY CO. LTD.
(72)**Name of Inventor :**
1)YI Xiaogang
2)MIAO Xionghui
3)LIU Shijian

(57) Abstract :
A concrete pumping structure and a control method thereof are disclosed. The concrete pumping structure comprises a first pumping cylinder structure and a second pumping cylinder structure. Each pumping cylinder structure comprises a delivery cylinder (1), a water tank (3) and a driving oil cylinder (7). The delivery cylinder (1) is provided with a concrete piston assembly (2) inside, and during the pumping process, a piston rod (6) of the driving oil cylinder (7) drives the concrete piston assembly (2) to reciprocate in the delivery cylinder (1), and the water tank (3) is positioned between the delivery cylinder (1) and the driving oil cylinder (7). The concrete pumping structure also comprises a concrete return hydraulic system, which controls the two driving oil cylinders (7) and drives the two concrete piston assemblies (2) to return back to the water tank (3) during returning the concrete. It ensures that the two concrete pistons can be returned back at the same time, and improves the efficiency of returning and replacing the concrete pistons.

No. of Pages : 54 No. of Claims : 24

(12) PATENT APPLICATION PUBLICATION
(19) INDIA
(22) Date of filing of Application :04/09/2012
(21) Application No.7629/CHENP/2012 A
(43) Publication Date : 31/01/2014

(54) Title of the invention : METHOD AND DEVICE FOR NON-INVASIVE ANATOMICAL AND SYSTEMIC COOLING AND NEUROPROTECTION

(51) International classification :A61B 18/02
(31) Priority Document No :61/305,038
(32) Priority Date :16/02/2010
(33) Name of priority country :U.S.A.
(86) International Application No :PCT/US2011/025121
Filing Date :16/02/2011
(87) International Publication No : NA
(61) Patent of Addition to Application Number :NA
Filing Date :NA
(62) Divisional to Application Number :NA
Filing Date :NA

(71)**Name of Applicant :**
1)THE JOHNS HOPKINS UNIVERSITY
Address of Applicant :3400 N. Charles St. Baltimore MD 21218 United States of America..
(72)**Name of Inventor :**
1)HARIKRISHNA Tandri
2)ZVIMAN Menekhem Muz

(57) Abstract :
The present invention provides a method and device for non-invasive anatomical and systemic cooling. The method and device provide for cooling of various bodily fluid-containing spaces or surfaces such as mucus-containing spaces or surfaces via delivery of a dry fluid not including a coolant into or upon the mucus-containing space or surface. Exposure of such mucus to the dry fluid results in evaporation and cooling of the anatomical feature and/or systemic cooling as intended. In this fashion therapeutic hypothermia may be achieved to provide for neuroprotection of various organs after ischemic insult such the brain after cardiac arrest.

No. of Pages : 34 No. of Claims : 43

(12) PATENT APPLICATION PUBLICATION
(19) INDIA
(22) Date of filing of Application :04/09/2012

(21) Application No.7630/CHENP/2012 A
(43) Publication Date : 31/01/2014

(54) Title of the invention : COMPOSITIONS AND METHODS FOR TREATING OBESITY AND OBESITY-RELATED CONDITIONS

(51) International classification	:A61K 31/335, A01N43/02
(31) Priority Document No	:12/658,331
(32) Priority Date	:08/02/2010
(33) Name of priority country	:U.S.A.
(86) International Application No	:PCT/US2010/042835
Filing Date	:22/07/2010
(87) International Publication No	: NA
(61) Patent of Addition to Application Number	:NA
Filing Date	:NA
(62) Divisional to Application Number	:NA
Filing Date	:NA

(71)**Name of Applicant :**
1)CHELATEXX LLC
Address of Applicant :110 Stanbery Ridge Fort Thomas Kentucky 41075 United States of America
(72)**Name of Inventor :**
1)Ronald THOMPSON

(57) Abstract :
A method to effectively treat the adverse events of ingested lipase inhibitor such as orlistat and to maintain the effectiveness of ingested orlistat the method comprising the steps of: ingesting a compound of orlistat to irreversibly bind with lipase enzymes of the gastrointestinal tract; ingesting a compound of simethicone to cause undigested fats to remain in an emulsified state in the bowel; and ingesting an enteric-coated activated charcoal to absorb emulsified fats only in the lower bowel thus preventing the adverse events associated with the ingestion of orlistat alone.

No. of Pages : 31 No. of Claims : 31

(12) PATENT APPLICATION PUBLICATION
(19) INDIA
(22) Date of filing of Application :04/09/2012
(21) Application No.7631/CHENP/2012 A
(43) Publication Date : 31/01/2014

(54) Title of the invention : ROLLER SKATE

(51) International classification :A63C 17/06
(31) Priority Document No :1000121-2
(32) Priority Date :09/02/2010
(33) Name of priority country :Sweden
(86) International Application No :PCT/SE2011/000016
Filing Date :02/02/2011
(87) International Publication No : NA
(61) Patent of Addition to Application Number :NA
Filing Date :NA
(62) Divisional to Application Number :NA
Filing Date :NA

(71)**Name of Applicant :**
1)MARSBLADE AB
Address of Applicant :Brunflovgen 13 SE-831 37 – STERSUND Sweden.
(72)**Name of Inventor :**
1)Per M…RS

(57) Abstract :
The present invention relates to an inline frame (1) for an inline skate designed to mimic the properties of an ice hockey skate blade on ice. The inline frame (1) includes at least one first connection part (8) intended to be connected to a boot (2) and at least two wheels positioned essentially in the inline frame™s (1) longitudinal direction. The unique thing about the inline frame is that it includes an upper chassis section (5) and a lower chassis section (6) which via a coupling element (7) are arranged to be rotatable in the inline frame™s (1) longitudinal direction and that the upper chassis section (5) includes at least one first contact surface (11) and that the lower chassis section (6) includes at least one second contact surface (19) where at least one of the first contact surface and the second contact surface is curvilinear.

No. of Pages : 27 No. of Claims : 14

(12) PATENT APPLICATION PUBLICATION
(19) INDIA
(22) Date of filing of Application :04/09/2012
(21) Application No.7632/CHENP/2012 A
(43) Publication Date : 31/01/2014

(54) Title of the invention : COMPOSITION AND METHOD FOR THE OXIDATIVE CONSUMPTION OF SALIVARY BIOMOLECULES

(51) International classification :A61K 8/00
(31) Priority Document No :12/704,360
(32) Priority Date :11/02/2010
(33) Name of priority country :U.S.A.
(86) International Application No :PCT/US2010/038012
Filing Date :09/06/2010
(87) International Publication No : NA
(61) Patent of Addition to Application Number :NA
Filing Date :NA
(62) Divisional to Application Number :NA
Filing Date :NA

(71)**Name of Applicant :**
1)MICROPURE INC.
Address of Applicant :16100 N. Greenway-Hayden Loop F-400 Scottsdale AZ 85260 United States of America
(72)**Name of Inventor :**
1)Martin C. GROOTVELD
2)Christopher J. L. SILWOOD
3)James L. RATCLIFF

(57) Abstract :
The composition and method for the use of stabilized chlorine dioxide as an antimicrobial agent against oral microorganisms for the treatment and prevention of halitosis and prevention of oral diseases through its oxidative consumption and inactivation of volatile sulfur compounds and their amino acid precursors is disclosed. Preferred concentrations of stabilized chlorine dioxide in this invention are in the range of 0.005% to 2.0% (w/v).

No. of Pages : 39 No. of Claims : 10

(12) PATENT APPLICATION PUBLICATION
(19) INDIA
(22) Date of filing of Application :04/09/2012
(21) Application No.7633/CHENP/2012 A
(43) Publication Date : 31/01/2014

(54) Title of the invention : SET-UP DEVICE FOR SCISSOR LIFTS

(51) International classification :B66F7/08
(31) Priority Document No :10 2010 001 727.2
(32) Priority Date :09/02/2010
(33) Name of priority country :Germany
(86) International Application No :PCT/EP2011/000252
Filing Date :21/01/2011
(87) International Publication No : NA
(61) Patent of Addition to Application Number :NA
Filing Date :NA
(62) Divisional to Application Number :NA
Filing Date :NA

(71)**Name of Applicant :**
1)MAHA MASCHINENBAU HALDENWANG GMBH & CO. KG
Address of Applicant :Hoyen 20 87490 Haldenwang Germany.
(72)**Name of Inventor :**
1)Veronika BLEEKER
2)Andreas GARTNER
3)Thomas GR–TZINGER

(57) Abstract :
The present invention relates to a lifting device for scissor lifts in particular for raising motor vehicles which during the starting phase of the lifting movement requires a reduced force for raising. The lifting device for scissor lifts comprises at least two scissor arms (60 70) which cross one another a linear actuator (10) for raising a scissor arm a double lever joint (20) which is pivotably mounted on a scissor arm (60); wherein the double lever joint (20) couples the lifting movement of the linear actuator to at least one scissor arm (60).

No. of Pages : 24 No. of Claims : 11

(12) PATENT APPLICATION PUBLICATION
(19) INDIA
(22) Date of filing of Application :28/12/2010
(21) Application No.3982/CHE/2010 A
(43) Publication Date : 31/01/2014

(54) Title of the invention : TONER WHEEL COVER FOR MOTORCYCLE

(51) International classification :B60T8/00
(31) Priority Document No :NA
(32) Priority Date :NA
(33) Name of priority country :NA
(86) International Application No :NA
Filing Date :NA
(87) International Publication No : NA
(61) Patent of Addition to Application Number :NA
Filing Date :NA
(62) Divisional to Application Number :NA
Filing Date :NA

(71)**Name of Applicant :**
1)TVS MOTOR COMPANY LIMITED
Address of Applicant :JAYALAKSHMI ESTATES NO.29 (OLD NO.8) HADDOWS ROAD, CHENNAI 600 006 Tamil Nadu India
(72)**Name of Inventor :**
1)R. SASIKUMAR
2)WINNEY K MATHEWS
3)RENGARAJAN BABU

(57) Abstract :
A toner wheel cover adapted for use in a motorcycle having an anti-locking braking system with a toner wheel disposed on wheel is provided with a cover, partially encasing the toner wheel and having a collar portion. The collar portion of cover is enmoulded with the spacer and is disposed on axle of wheel. The cover is partially cut at one side to accommodate sensor device.

No. of Pages : 13 No. of Claims : 5

(12) PATENT APPLICATION PUBLICATION
(19) INDIA
(22) Date of filing of Application :28/12/2010
(21) Application No.3983/CHE/2010 A
(43) Publication Date : 31/01/2014

(54) Title of the invention : MAIN STAND LAYOUT FOR TWO WHEELED VEHICLE

(51) International classification :F16M11/00
(31) Priority Document No :NA
(32) Priority Date :NA
(33) Name of priority country :NA
(86) International Application No :NA
Filing Date :NA
(87) International Publication No : NA
(61) Patent of Addition to Application Number :NA
Filing Date :NA
(62) Divisional to Application Number :NA
Filing Date :NA

(71)**Name of Applicant :**
1)TVS MOTOR COMPANY LIMITED
Address of Applicant :JAYALAKSHMI ESTATES NO.29 (OLD NO.8) HADDOWS ROAD, CHENNAI 600 006 Tamil Nadu India
(72)**Name of Inventor :**
1)AMIT JAIN
2)VENKATA MANGARAJU KARANAM
3)RENGARAJAN BABU

(57) Abstract :
The present invention presents a scooter type vehicle with a different mounting arrangement of the frame, crank case, toggle link and the main stand unit. The crank case is placed between the parallel members of the frame and the toggle link having a toggle link upper tube, a toggle link lower tube and a bridge structure is connected with the frame at its upper tube through bracket structures and the toggle link lower tube is secured with the extended mounting bosses of the power unit case. The main stand unit has two main stand tubes spaced in width wise direction of the vehicle. The extended mounting bosses of the crank case are secured between the toggle link lower tube structure and the main stand tube structures in the same horizontal axis.

No. of Pages : 15 No. of Claims : 10

(12) PATENT APPLICATION PUBLICATION
(19) INDIA
(22) Date of filing of Application :28/12/2010
(21) Application No.3984/CHE/2010 A
(43) Publication Date : 31/01/2014

(54) Title of the invention : SIDE COVER ASSEMBLY FOR MOTORCYCLE

(51) International classification :B62J17/00
(31) Priority Document No :NA
(32) Priority Date :NA
(33) Name of priority country :NA
(86) International Application No :NA
Filing Date :NA
(87) International Publication No : NA
(61) Patent of Addition to Application Number :NA
Filing Date :NA
(62) Divisional to Application Number :NA
Filing Date :NA

(71)**Name of Applicant :**
1)TVS MOTOR COMPANY LIMITED
Address of Applicant :JAYALAKSHMI ESTATES NO.29 (OLD NO.8) HADDOWS ROAD, CHENNAI 600 006 Tamil Nadu India
(72)**Name of Inventor :**
1)RAJAMANI RAVISANKAR
2)THANIKACHALAM GUNALAN
3)RAMANATHAN ANANTHA NARAYANAN
4)DEVENDRA KUMAR

(57) Abstract :
A side cover assembly for a two wheeler is provided with a side cover mounting panel fixed to the frame of the vehicle and a depending side cover mounted to the side cover mounting panel. The side cover mounting panel has at least one locator on front portion of side cover mounting panel to get inserted into fuel tank of the vehicle. The side cover mounting panel has provision on the rear portion of the side cover mounting panel to fix it to frame of the vehicle. An edge guide is provided between the side cover mounting panel and depending side cover.

No. of Pages : 11 No. of Claims : 5

(12) PATENT APPLICATION PUBLICATION
(19) INDIA
(22) Date of filing of Application :28/12/2010
(21) Application No.3985/CHE/2010 A
(43) Publication Date : 31/01/2014

(54) Title of the invention : MOTORCYCLE WITH ANTI LOCK BRAKE PIPES

(51) International classification	:B60T8/00	(71)**Name of Applicant :**
(31) Priority Document No	:NA	**1)TVS MOTOR COMPANY LIMITED**
(32) Priority Date	:NA	Address of Applicant :JAYALAKSHMI ESTATES NO.29
(33) Name of priority country	:NA	(OLD NO.8) HADDOWS ROAD, CHENNAI 600 006 Tamil
(86) International Application No	:NA	Nadu India
Filing Date	:NA	(72)**Name of Inventor :**
(87) International Publication No	: NA	**1)R. SASIKUMAR**
(61) Patent of Addition to Application Number	:NA	**2)CHANDAN MANDIKAL RAGHURAM**
Filing Date	:NA	**3)KRISHNABHATTA NAGARAJA**
(62) Divisional to Application Number	:NA	**4)RENGARAJAN BABU**
Filing Date	:NA	

(57) Abstract :
A motorcycle provided with anti-lock brake system comprises a plurality of brake pipes extending forwardly and rearwardly of ABS unit wherein a portion of brake pipe is metal brake line and rest portion is rubber brake hose.

No. of Pages : 17 No. of Claims : 4

(12) PATENT APPLICATION PUBLICATION
(19) INDIA
(22) Date of filing of Application :28/12/2010
(21) Application No.3986/CHE/2010 A
(43) Publication Date : 31/01/2014

(54) Title of the invention : FOUR-CYCLE ENGINE

(51) International classification :F16D43/00
(31) Priority Document No :NA
(32) Priority Date :NA
(33) Name of priority country :NA
(86) International Application No :NA
Filing Date :NA
(87) International Publication No : NA
(61) Patent of Addition to Application Number :NA
Filing Date :NA
(62) Divisional to Application Number :NA
Filing Date :NA

(71)**Name of Applicant :**
1)TVS MOTOR COMPANY LIMITED
Address of Applicant :JAYALAKSHMI ESTATES NO.29 (OLD NO.8) HADDOWS ROAD, CHENNAI 600 006 Tamil Nadu India
(72)**Name of Inventor :**
1)KANDREGULA SRINIVASA RAO
2)KRISHNABHATTA NAGARAJA
3)PALNATI SIVA SATYANARAYANA

(57) Abstract :
A motorcycle is provided with a centrifugal clutch coupling transmission system and crankshaft; a crankcase defining a first wet chamber for housing the said crankshaft and the transmission system, a second wet chamber for housing the centrifugal clutch assembly.

No. of Pages : 14 No. of Claims : 5

(12) PATENT APPLICATION PUBLICATION
(19) INDIA
(22) Date of filing of Application :28/12/2010
(21) Application No.3987/CHE/2010 A
(43) Publication Date : 31/01/2014

(54) Title of the invention : STARTING MEANS FOR A TWO-WHEELER

(51) International classification :F16D43/00
(31) Priority Document No :NA
(32) Priority Date :NA
(33) Name of priority country :NA
(86) International Application No :NA
Filing Date :NA
(87) International Publication No : NA
(61) Patent of Addition to Application Number :NA
Filing Date :NA
(62) Divisional to Application Number :NA
Filing Date :NA

(71)**Name of Applicant :**
1)TVS MOTOR COMPANY LIMITED
Address of Applicant :JAYALAKSHMI ESTATES NO.29 (OLD NO.8) HADDOWS ROAD, CHENNAI 600 006 Tamil Nadu India
(72)**Name of Inventor :**
1)KANDREGULA SRINIVASA RAO
2)KRISHNABHATTA NAGARAJA
3)PALNATI SIVA SATYANARAYANA

(57) Abstract :
The present invention provides a drive having a centrifugal clutch that move into frictional engagement by application of centrifugal force to provide a drive to an output shaft. For normal starting the vehicle an electric-starter is provided whereas, for push starting the vehicle a gear operably coupled to the oil pump drive gear is provided on the output shaft.

No. of Pages : 15 No. of Claims : 3

(12) PATENT APPLICATION PUBLICATION
(19) INDIA
(22) Date of filing of Application :04/09/2012
(21) Application No.7650/CHENP/2012 A
(43) Publication Date : 31/01/2014

(54) Title of the invention : SUBFRAME DEPENDENT PHYSICAL UPLINK CONTROL CHANNEL (PUCCH) REGION DESIGN

(51) International classification :H04L 5/00
(31) Priority Document No :61/317,652
(32) Priority Date :25/03/2010
(33) Name of priority country :U.S.A.
(86) International Application No :PCT/US2011/030083
Filing Date :25/03/2011
(87) International Publication No : NA
(61) Patent of Addition to Application Number :NA
Filing Date :NA
(62) Divisional to Application Number :NA
Filing Date :NA

(71)**Name of Applicant :**
1)QUALCOMM Incorporated
Address of Applicant :Attn: International IP Administration 5775 Morehouse Drive San Diego California 92121-1714 USA.
(72)**Name of Inventor :**
1)JI Tingfang
2)CHEN Wanshi
3)MALLADI Durga Prasad
4)GAAL Peter

(57) Abstract :
According to certain aspects resources allocated to a user equipment (UE) for physical uplink control channel (PUCCH) transmissions may be determined in a subframe-type dependent manner. As a result PUCCH regions for different subframes may vary based on the subframe types.

No. of Pages : 54 No. of Claims : 48

(12) PATENT APPLICATION PUBLICATION
(19) INDIA
(22) Date of filing of Application :27/09/2012
(21) Application No.4029/CHE/2012 A
(43) Publication Date : 31/01/2014

(54) Title of the invention : ENGINE ASSEMBLY COMPRISING A BEARING BLOCK AND METHOD FOR ITS INSTALLATION

(51) International classification :F16C
(31) Priority Document No :10 2011 114 786.5
(32) Priority Date :01/10/2011
(33) Name of priority country :Germany
(86) International Application No :NA
Filing Date :NA
(87) International Publication No : NA
(61) Patent of Addition to Application Number :NA
Filing Date :NA
(62) Divisional to Application Number :NA
Filing Date :NA

(71)**Name of Applicant :**
1)MAN TRUCK & BUS AG
Address of Applicant :DACHAUER STR. 667, 80995 MUNCHEN Germany
(72)**Name of Inventor :**
1)VOGEL, WERNER

(57) Abstract :
Engine assembly comprising a base body (1), a shaft (2) and at least one bearing block (3), wherein the bearing block (3) comprises an opening (4) for receiving and rotatably mounting the shaft (2), wherein the bearing block (3) is attached to the base body (1) via at least one fixing means (5) and in the final mounted state the shaft is rotatably mounted on the base body, wherein in the contact region (6) of bearing block (3) and base body (1) at least one engagement element (7) engages in a counter-element region (8), characterised in that the counter-element region (8) comprises at least one edge of a recess (9) formed as a line (10) or a line (10) within a face of a recess (9), preferably in a groove like recess (9), and the counter-element region (8) and the at least one engagement element (7) are formed such that the bearing block (3) and the base body (1) in the assembled state and without installation of the fixing means (5) form no form-fit connection along the line (10) at least in one direction.

No. of Pages : 30 No. of Claims : 15

(12) PATENT APPLICATION PUBLICATION
(19) INDIA
(22) Date of filing of Application :27/09/2012
(21) Application No.4030/CHE/2012 A
(43) Publication Date : 31/01/2014

(54) Title of the invention : UNIT OF A MEDIA DEPOSITORY

(51) International classification :B65H
(31) Priority Document No :13/250,639
(32) Priority Date :30/09/2011
(33) Name of priority country :U.S.A.
(86) International Application No :NA
Filing Date :NA
(87) International Publication No : NA
(61) Patent of Addition to Application Number :NA
Filing Date :NA
(62) Divisional to Application Number :NA
Filing Date :NA

(71)**Name of Applicant :**
1)NCR CORPORATION
Address of Applicant :3097 SATELLITE BLVD., DULUTH, GEORGIA 30096 U.S.A.
(72)**Name of Inventor :**
1)THOMAS PETEREK

(57) Abstract :
A unit of a media depository is described. The unit comprises: a body adapted to be supported by at least one support member of the depository in a working position and further adapted to be slidably moveable on the at least one supporting member between the working position and a pivot position; a first hinge member adapted to be movably mounted on the at least one support member; and, a second hinge member attached to or integral with the body. When the body is moved from the working position to the pivot position, the first and second hinge members engage such that the first hinge member is forced by the second hinge member to move with the body to the pivot position at which the first and second hinge members form a pivoting mechanism by which the body is pivotally attached to the at least one support member.

No. of Pages : 22 No. of Claims : 15

(12) PATENT APPLICATION PUBLICATION
(19) INDIA
(22) Date of filing of Application :06/09/2012
(21) Application No.7692/CHENP/2012 A
(43) Publication Date : 31/01/2014

(54) Title of the invention : PLANTS HAVING ENHANCED YIELD-RELATED TRAITS AND METHOD FOR MAKING THE SAME

(51) International classification :A01H1/00
(31) Priority Document No :10156928.3
(32) Priority Date :18/03/2010
(33) Name of priority country :EPO
(86) International Application No :PCT/IB2011/051055
Filing Date :14/03/2011
(87) International Publication No : NA
(61) Patent of Addition to Application Number :NA
Filing Date :NA
(62) Divisional to Application Number :NA
Filing Date :NA

(71)**Name of Applicant :**
1)BASF PLANT SCIENCE COMPANY GmbH
Address of Applicant :67056 Ludwigshafen Germany;
(72)**Name of Inventor :**
1)HATZFELD Yves

(57) Abstract :
The present invention relates generally to the field of molecular biology and concerns a method for enhancing various economically important yield-related traits in plants. More specifically the present invention concerns a method for enhancing yield-related traits in plants by modulating expression in a plant of a nucleic acid encoding an POI (Protein Of Interest) polypeptide. The present invention also concerns plants having modulated expression of a nucleic acid encoding an POI polypeptide which plants have enhanced yield-related traits relative to control plants. The invention also provides hitherto unknown POI-encoding nucleic acids and constructs comprising the same useful in performing the methods of the invention.

No. of Pages : 94 No. of Claims : 26

(12) PATENT APPLICATION PUBLICATION
(19) INDIA
(22) Date of filing of Application :06/09/2012
(21) Application No.7693/CHENP/2012 A
(43) Publication Date : 31/01/2014

(54) Title of the invention : METHOD FOR PREPARING CHEMICAL COMPOUNDS OF INTEREST BY AROMATIC NUCLEOPHILIC SUBSTITUTION

(51) International classification :C07C 51/353
(31) Priority Document No :1051226
(32) Priority Date :19/02/2010
(33) Name of priority country :France
(86) International Application No :PCT/FR2011/050337
Filing Date :17/02/2011
(87) International Publication No : NA
(61) Patent of Addition to Application Number :NA
Filing Date :NA
(62) Divisional to Application Number :NA
Filing Date :NA

(71)**Name of Applicant :**
1)CENTRE NATIONAL DE LA RECHERCHE SCIENTIFIQUE
Address of Applicant :3 rue Michel Ange F-75016 Paris France
2)UNIVERSIT‰ DU MAINE
(72)**Name of Inventor :**
1)MORTIER Jacques
2)CASTANET Anne-Sophie
3)BELAUD-ROTUREAU Mickael

(57) Abstract :
The aim of the invention is to provide a method for preparing carboxylic acid derivatives by aromatic nucleophilic substitution in which a carboxylic acid derivative having a single carboxyl functional group or one of the salts thereof said carboxylic acid derivative having in the ortho position of the carboxyl functional group a leaving group which is preferably an atom of fluorine or of chlorine or an alkoxy group chiral or not preferably a methoxy group said carboxylic acid derivative not being substituted by an electroattractive group other than the leaving group if any; is reacted with a reactant MNu where M is a metal and Nu is a nucleophile chiral or not said aromatic nucleophilic substitution reaction being carried out without a catalyst and without a step of protecting/deprotecting the acid functional group of the starting compound.

No. of Pages : 60 No. of Claims : 14

(12) PATENT APPLICATION PUBLICATION
(19) INDIA
(22) Date of filing of Application :29/12/2010
(21) Application No.4005/CHE/2010 A
(43) Publication Date : 31/01/2014

(54) Title of the invention : PIPE AND COUPLER SYSTEM

(51) International classification :F16L15/00
(31) Priority Document No :NA
(32) Priority Date :NA
(33) Name of priority country :NA
(86) International Application No :NA
Filing Date :NA
(87) International Publication No : NA
(61) Patent of Addition to Application Number :NA
Filing Date :NA
(62) Divisional to Application Number :NA
Filing Date :NA

(71)**Name of Applicant :**
1)AJAY SHAND
Address of Applicant :#50, 7TH CROSS WILSON GARDEN, BANGALORE - 560 027 Karnataka India
(72)**Name of Inventor :**
1)AJAY SHAND

(57) Abstract :
The present subject matter relates to a coupler (106) for a pipe system. The coupler (106) has a first end (108) to receive one end (136) of a fixed pipe (102) and a second end (110) to receive one end of a removable pipe (104). The first end (108) is provided with first internal threads (116) corresponding to first external threads (118) on the one end (136) of the fixed pipe (102). Further, the second end (110) is provided with second internal threads (114) corresponding to second external threads (120) on the one end of the removable pipe (104). The coupler (106) has a coupler bonding surface (122) on an internal surface between a central region (138) of the coupler (106) and the first internal threads (116) of the first end (108). The coupler bonding surface (122) corresponds to a fixed pipe bonding surface (126) of the fixed pipe (102).

No. of Pages : 18 No. of Claims : 12

(12) PATENT APPLICATION PUBLICATION
(19) INDIA
(22) Date of filing of Application :06/09/2012
(21) Application No.7724/CHENP/2012 A
(43) Publication Date : 31/01/2014

(54) Title of the invention : APPARATUS AND METHOD FOR USER EQUIPMENT BATTERY INFORMATION REPORTING

(51) International classification :H04W 24/08
(31) Priority Document No :61/309,666
(32) Priority Date :02/03/2010
(33) Name of priority country :U.S.A.
(86) International Application No :PCT/US2011/026661
Filing Date :01/03/2011
(87) International Publication No : NA
(61) Patent of Addition to Application Number :NA
Filing Date :NA
(62) Divisional to Application Number :NA
Filing Date :NA

(71)**Name of Applicant :**
1)QUALCOMM Incorporated
Address of Applicant :Attn: International IP Administration 5775 Morehouse Drive San Diego California 92121-1714 USA
(72)**Name of Inventor :**
1)PICA Francesco
2)CATOVIC Amer
3)DUAN Long

(57) Abstract :
An apparatus and method for reporting battery information includes receiving configuration information including a reporting mode from a network entity; collecting the battery information of a user equipment (UE); preparing the battery information in the reporting mode; and sending the battery information in the reporting mode over a communications transport mechanism to the network entity. In one aspect the apparatus and method for receiving battery information includes selecting and configuring a reporting mode; sending configuration information comprising the reporting mode over a communications transport mechanism to a user equipment (UE); and receiving the battery information from the UE wherein the UE uses the configuration information and the reporting mode.

No. of Pages : 43 No. of Claims : 35

(12) PATENT APPLICATION PUBLICATION
(19) INDIA
(22) Date of filing of Application :06/09/2012
(21) Application No.7725/CHENP/2012 A
(43) Publication Date : 31/01/2014

(54) Title of the invention : LINE MULTIPLYING TO ENABLE INCREASED REFRESH RATE OF A DISPLAY

(51) International classification :G09G 3/34
(31) Priority Document No :61/313,577
(32) Priority Date :12/03/2010
(33) Name of priority country :U.S.A.
(86) International Application No :PCT/US2011/027978
Filing Date :10/03/2011
(87) International Publication No : NA
(61) Patent of Addition to Application Number :NA
Filing Date :NA
(62) Divisional to Application Number :NA
Filing Date :NA

(71)**Name of Applicant :**
1)QUALCOMM MEMS Technologies Inc.
Address of Applicant :5775 Morehouse Drive San Diego California 92121 USA.
(72)**Name of Inventor :**
1)CUMMINGS William

(57) Abstract :
This disclosure provides systems methods and apparatus for reducing a frame write time or increasing a refresh rate of a display. In one aspect displays may include a plurality of pixels arranged along segment lines and common lines and all or a portion of the display may be driven in a manner which simultaneously addresses multiple common lines. Display resolution or color range of all or a portion of the display may thus be temporarily sacrificed in exchange for a reduced frame write time enabling the use of higher refresh rates.

No. of Pages : 57 No. of Claims : 28

(12) PATENT APPLICATION PUBLICATION
(19) INDIA
(22) Date of filing of Application :07/09/2012
(21) Application No.7727/CHENP/2012 A
(43) Publication Date : 31/01/2014

(54) Title of the invention : IMPROVEMENTS IN AND RELATING TO IMPLEMENTS

(51) International classification :B25G 3/04
(31) Priority Document No :583181
(32) Priority Date :08/02/2010
(33) Name of priority country :New Zealand
(86) International Application No :PCT/NZ2011/000017
Filing Date :08/02/2011
(87) International Publication No : NA
(61) Patent of Addition to Application Number :NA
Filing Date :NA
(62) Divisional to Application Number :NA
Filing Date :NA

(71)**Name of Applicant :**
1)IRVIN Timothy James
Address of Applicant :16 Bodkin Street Lake Hawea RD2 Wanaka 9382 New Zealand
(72)**Name of Inventor :**
1)IRVIN Timothy James

(57) Abstract :
An implement including: - a shaft; - a plug; - a tool portion the implement characterised in that the plug is received and retained at one end of the shaft and wherein the plug and/or the tool portion are adapted to engage with one another.

No. of Pages : 21 No. of Claims : 20

(12) PATENT APPLICATION PUBLICATION
(19) INDIA
(22) Date of filing of Application :07/09/2012
(21) Application No.7729/CHENP/2012 A
(43) Publication Date : 31/01/2014

(54) Title of the invention : METHODS AND APPARATUSES FOR FACILITATING LOCATION SELECTION

(51) International classification :G06F 3/03
(31) Priority Document No :12/715,899
(32) Priority Date :02/03/2010
(33) Name of priority country :U.S.A.
(86) International Application No :PCT/FI2011/050113
Filing Date :09/02/2011
(87) International Publication No : NA
(61) Patent of Addition to Application Number :NA
Filing Date :NA
(62) Divisional to Application Number :NA
Filing Date :NA

(71)**Name of Applicant :**
1)NOKIA CORPORATION
Address of Applicant :Keilalahdentie 4 FIN-02150 Espoo Finland
(72)**Name of Inventor :**
1)Tomi Ilvessalmi
2)Rosalinde Belzer
3)Katri Laakso
4)Roope Rainisto
5)Jan Krebber

(57) Abstract :
Methods and apparatuses are provided for facilitating location selection. A method may include causing display of a user interface for selecting a location associated with a calendar entry. The method may further include determining a location selected via the user interface. The method may additionally include associating the determined location with the calendar entry. Corresponding apparatuses are also provided

No. of Pages : 34 No. of Claims : 20

(12) PATENT APPLICATION PUBLICATION
(19) INDIA
(22) Date of filing of Application :07/09/2012
(21) Application No.7773/CHENP/2012 A
(43) Publication Date : 31/01/2014

(54) Title of the invention : PROCESSING OF MULTI-DEVICE AUDIO CAPTURE

(51) International classification :H04R 3/00
(31) Priority Document No :NA
(32) Priority Date :NA
(33) Name of priority country :NA
(86) International Application No :PCT/IB2010/050704
Filing Date :17/02/2010
(87) International Publication No : NA
(61) Patent of Addition to Application Number :NA
Filing Date :NA
(62) Divisional to Application Number :NA
Filing Date :NA

(71)**Name of Applicant :**
1)NOKIA CORPORATION
Address of Applicant :Keilalahdentie 4 FIN-02150 Espoo Finland
(72)**Name of Inventor :**
1)Juha Petteri Ojanper

(57) Abstract :
It is inter alia disclosed to select, by a first apparatus (21), one or more recording devices (20) to obtain a set of selected recording devices, or to receive, at the first apparatus (21), information on a set of one or more selected recording devices. The selected recording devices in the set of selected recording devices are selected from a set of recording devices at least based on relevance levels determined for the recording devices of the set of recording devices. A combination of audio signals recorded by the selected recording devices of the set of selected recording devices in an audio scene to obtain one or more combined audio signals for rendering is performed or caused by the first apparatus (21).

No. of Pages : 91 No. of Claims : 67

(12) PATENT APPLICATION PUBLICATION
(19) INDIA
(22) Date of filing of Application :07/09/2012
(21) Application No.7774/CHENP/2012 A
(43) Publication Date : 31/01/2014

(54) Title of the invention : MAP DATA MANAGEMENT DEVICE MAP DATA MANAGEMENT METHOD AND INFORMATION TERMINAL

(51) International classification :G01C 21/32
(31) Priority Document No :2010-081269
(32) Priority Date :31/03/2010
(33) Name of priority country :Japan
(86) International Application No :PCT/JP2011/056141
Filing Date :09/03/2011
(87) International Publication No : NA
(61) Patent of Addition to Application Number :NA
Filing Date :NA
(62) Divisional to Application Number :NA
Filing Date :NA

(71)**Name of Applicant :**
1)AISIN AW CO. LTD.
Address of Applicant :10 Takane Fujii-cho Anjo-shi Aichi-ken 444-1192 Japan
(72)**Name of Inventor :**
1)SUZUKI Seiichi
2)KURAUCHI Naoyuki

(57) Abstract :
When information related to a first country selected through an information terminal is received a server control portion of a management server classifies other countries besides the first country into a first group and a second group. If information related to a second country included in the first group is subsequently received from the information terminal (a Yes determination at step S1-14) the server control portion generates common map data that includes the first country and the second country and controls such that the common map data is transmitted to the information terminal.

No. of Pages : 65 No. of Claims : 6

(12) PATENT APPLICATION PUBLICATION
(19) INDIA
(22) Date of filing of Application :07/09/2012
(21) Application No.7775/CHENP/2012 A
(43) Publication Date : 31/01/2014

(54) Title of the invention : METHOD SYSTEM AND BASE STATION SUBSYSTEM FOR REALIZING HANDOVER IN LOCAL SWITCH

(51) International classification :H04W 36/08
(31) Priority Document No :201010165412.2
(32) Priority Date :30/04/2010
(33) Name of priority country :China
(86) International Application No :PCT/CN2011/072854
Filing Date :15/04/2011
(87) International Publication No : NA
(61) Patent of Addition to Application Number :NA
Filing Date :NA
(62) Divisional to Application Number :NA
Filing Date :NA

(71)**Name of Applicant :**
1)ZTE CORPORATION
Address of Applicant :ZTE Plaza Keji Road South Hi-Tech Industrial Park Nanshan Shenzhen Guangdong 518057 China
(72)**Name of Inventor :**
1)Jing LI
2)Xinhui WANG

(57) Abstract :
The present invention provides a method for implementing a handover in a local switch, and the method comprises: when one party Mobile Station of a call implementing a local switch mode performs a Base Station Subsystem handover, the Base Station Subsystem handover transmits uplink speech data of the Mobile Station which does not need to perform the handover on a local switch link of the Base Station Subsystem and a link between the Base Station Subsystem and a Media Gateway simultaneously. A Base Station Subsystem implementing a handover in a local switch is also provided by the present invention. The present invention can efficiently avoid the speech loss of the Mobile Station performing the handover during the handover, and guarantees that the Mobile Station which needs to perform the handover can receive the speech data of the other party user no matter the Mobile Station is in the original BSS or the target BSS, thus maintaining the call between the two Mobile Stations efficiently.

No. of Pages : 18 No. of Claims : 10

(12) PATENT APPLICATION PUBLICATION
(19) INDIA
(22) Date of filing of Application :07/09/2012
(21) Application No.7776/CHENP/2012 A
(43) Publication Date : 31/01/2014

(54) Title of the invention : SYSTEM METHOD AND BASE STATION SUBSYSTEM FOR REALIZING HANDOVER IN LOCAL SWITCH

(51) International classification :H04W 36/08
(31) Priority Document No :201010165403.3
(32) Priority Date :30/04/2010
(33) Name of priority country :China
(86) International Application No :PCT/CN2011/072858
Filing Date :15/04/2011
(87) International Publication No : NA
(61) Patent of Addition to Application Number :NA
Filing Date :NA
(62) Divisional to Application Number :NA
Filing Date :NA

(71)**Name of Applicant :**
1)ZTE CORPORATION
Address of Applicant :ZTE Plaza Keji Road South Hi-Tech Industrial Park Nanshan Shenzhen Guangdong 518057 China
(72)**Name of Inventor :**
1)Jing LI
2)Xinhui WANG

(57) Abstract :
The present invention discloses a method for implementing a handover in a local switch, and the method includes: a core network transmitting indication information to a source base station subsystem during any terminal of communication parties which carries out a local switch is performing a base station subsystem handover, and the source base station subsystem determining whether to transmit user-plane speech data received from a media gateway to the terminal which has not performed the base station subsystem handover, or to transmit the user-plane speech data received from an internal link to the terminal which has not performed the base station subsystem handover, according to the indication information. The present invention also discloses a system for implementing a handover in a local switch as well as a base station subsystem. The present invention can accomplish the base station subsystem (BSS) handover of terminals while realizing a local switch, thus effectively avoiding the loss of speech data.

No. of Pages : 20 No. of Claims : 15

(12) PATENT APPLICATION PUBLICATION
(19) INDIA
(22) Date of filing of Application :13/07/2009
(21) Application No.4107/CHENP/2009 A
(43) Publication Date : 31/01/2014

(54) Title of the invention : TRACKING SYSTEM FOR BLAST HOLES

(51) International classification :F24D1/00
(31) Priority Document No :20066907079
(32) Priority Date :18/12/2006
(33) Name of priority country :Australia
(86) International Application No :PCT/AU2007/001957
Filing Date :18/12/2007
(87) International Publication No :WO 2008/074071
(61) Patent of Addition to Application Number :NA
Filing Date :NA
(62) Divisional to Application Number :NA
Filing Date :NA

(71)**Name of Applicant :**
1)GLOBAL TRACKING SOLUTIONS PTY LTD.,
Address of Applicant :35 GODDARD STREET, LATHLAIN, WESTERN AUSTRALIA 6100 Australia
(72)**Name of Inventor :**
1)MOORE, JOHN, VINCENT,

(57) Abstract :
A system and method is provided for identifying any one or more of a plurality of blast holes in a drill pattern. The method involves providing each blast hole in a drill pattern with an individually identifiable first identifier and a GPS device capable of relaying identification and location data for the respective blast hole. A data reception system is provided to receive the data and store it in a database for processing purposes. The information may be later used to correlate any one or more of the blast holes with a corresponding detonator.

No. of Pages : 36 No. of Claims : 31

(12) PATENT APPLICATION PUBLICATION
(19) INDIA
(22) Date of filing of Application :05/09/2012
(21) Application No.7686/CHENP/2012 A
(43) Publication Date : 31/01/2014

(54) Title of the invention : SUBMERSIBLE MOTOR PUMP MOTOR PUMP AND TANDEM MECHANICAL SEAL

(51) International classification :F04D 13/06
(31) Priority Document No :2010-028863
(32) Priority Date :12/02/2010
(33) Name of priority country :Japan
(86) International Application No :PCT/JP2010/068099
Filing Date :07/10/2010
(87) International Publication No : NA
(61) Patent of Addition to Application Number :NA
Filing Date :NA
(62) Divisional to Application Number :NA
Filing Date :NA

(71)**Name of Applicant :**
1)EBARA CORPORATION
Address of Applicant :11-1 Haneda Asahi-cho Ohta-ku Tokyo 144-8510 Japan
(72)**Name of Inventor :**
1)KAWABATA Junya
2)MAKINO Chikara
3)AIYOSHIZAWA Shunichi

(57) Abstract :
A submersible motor pump includes a water jacket (11) having a circulation passage (24A, 24B, 24C, and 24D) of a coolant, a centrifugal impeller (20) for circulating the coolant, a suction passage configured to provide fluid communication between the circulation passage (24A, 24B, 24C, and 24D) and a fluid inlet of the centrifugal impeller (20), and a discharge passage configured to provide fluid communication between a fluid outlet of the centrifugal impeller (20) and the circulation passage (24A, 24B, 24C, and 24D). The discharge passage includes a heat-exchange passage (80) formed by two wall surfaces, one of which is constituted by a member which contacts a liquid conveyed by a main impeller (12). The heat-exchange passage (80) has a circular shape extending radially outwardly from the fluid outlet of the centrifugal impeller (20). The heat-exchange passage (80) includes at least one axial passage section having a length component in an axial direction of the rotational shaft (1).

No. of Pages : 35 No. of Claims : 22

(12) PATENT APPLICATION PUBLICATION
(19) INDIA
(22) Date of filing of Application :05/09/2012
(21) Application No.7687/CHENP/2012 A
(43) Publication Date : 31/01/2014

(54) Title of the invention : APPARATUS AND METHOD FOR THE PRODUCTION OF SEMICONDUCTOR MATERIAL FOILS

(51) International classification :C30B 28/10
(31) Priority Document No :2004209
(32) Priority Date :08/02/2010
(33) Name of priority country :Netherlands
(86) International Application No :PCT/NL2011/050087
Filing Date :08/02/2011
(87) International Publication No : NA
(61) Patent of Addition to Application Number :NA
Filing Date :NA
(62) Divisional to Application Number :NA
Filing Date :NA

(71)**Name of Applicant :**
1)RGS DEVELOPMENT B.V.
Address of Applicant :Bijlestaal 54a NL-1721 PW Broek op Langedijk Netherlands
(72)**Name of Inventor :**
1)SCH–NECKER Axel Georg
2)PICHON Pierre-Yves
3)HOEK Eelko Gelbert
4)DE JAGER Eric

(57) Abstract :
A casting device for producing semiconductor material foil includes a casting frame and a substrate band. The casting frame is arranged for holding a molten semiconductor material and includes sidewalls of which an exit sidewall is located at an output position for the semiconductor material foil. The exit side wall is provided with an exit slit. The casting device further includes a local force exerting means to exert at the location of the exit slit a locally enlarged external force on the molten semiconductor material to enlarge an outer pressure on the molten material at the exit slit.

No. of Pages : 21 No. of Claims : 21

(12) PATENT APPLICATION PUBLICATION
(19) INDIA
(22) Date of filing of Application :05/09/2012
(21) Application No.7688/CHENP/2012 A
(43) Publication Date : 31/01/2014

(54) Title of the invention : SYSTEM AND METHOD FOR TIMING AND FREQUENCY SYNCHRONIZATION BY A FEMTO ACCESS POINT

(51) International classification :H04W 56/00
(31) Priority Document No :61/309,730
(32) Priority Date :02/03/2010
(33) Name of priority country :U.S.A.
(86) International Application No :PCT/US2011/026800
Filing Date :02/03/2011
(87) International Publication No : NA
(61) Patent of Addition to Application Number :NA
Filing Date :NA
(62) Divisional to Application Number :NA
Filing Date :NA

(71)**Name of Applicant :**
1)QUALCOMM Incorporated
Address of Applicant :Attn: International IP Administration 5775 Morehouse Drive San Diego California 92121-1714 USA.
(72)**Name of Inventor :**
1)SOLIMAN Samir Salib
2)AWONIYI Olufunmilola O.
3)CHAKRABORTY Kaushik

(57) Abstract :
Techniques are provided for frequency and timing synchronization of a femto access point (FAP). In one example the FAP may be configured to establish an out-of-band (OOB) link with at least user equipment (UE) and receive aiding parameters from the at least one UE via the OOB link. The FAP may be configured to extract frequency and timing information from at least one uplink packet of the at least one UE based at least in part on the aiding parameters. Extracting the frequency and timing information may involve sniffing the at least one uplink packet to a macro base station (e.g. eNB).

No. of Pages : 72 No. of Claims : 83

(12) PATENT APPLICATION PUBLICATION
(19) INDIA
(22) Date of filing of Application :11/09/2012
(21) Application No.7876/CHENP/2012 A
(43) Publication Date : 31/01/2014

(54) Title of the invention : METHOD SHORT MESSAGE CENTER HOME LOCATION REGISTER AND SYSTEM FOR ACHIEVING SHORT MESSAGE USER ROAMING BETWEEN NETWORKS

(51) International classification :H04W 4/14
(31) Priority Document No :201010233148.1
(32) Priority Date :21/07/2010
(33) Name of priority country :China
(86) International Application No :PCT/CN2010/077142
Filing Date :20/09/2010
(87) International Publication No : NA
(61) Patent of Addition to Application Number :NA
Filing Date :NA
(62) Divisional to Application Number :NA
Filing Date :NA

(71)**Name of Applicant :**
1)ZTE CORPORATION
Address of Applicant :ZTE Plaza Keji Road South Hi-Tech Industrial Park Nanshan Shenzhen Guangdong 518057 China
(72)**Name of Inventor :**
1)Daoping ZHANG
2)Jian SHI
3)Lei HE
4)Xinfeng CUI
5)Lei SUN

(57) Abstract :
A method for implementing inter-network roaming of short message user is disclosed in the present invention, which includes: a short message center initiating a terminating call request to a Home Location Register (HLR); the HLR responding to the terminating call request, and returning a terminating call Mobile Switching Centre (MSC) address; the short message center judging whether the terminating call MSC address contains a special number; and when the terminating call MSC address contains the special number, the short message center re-initiating a corresponding terminating call request to the HLR according to the special number. A short message center, HLR and system for implementing the inter-network roaming of short message user are provided in the present invention correspondingly. In the present invention, whether the terminating call MSC address returned by the HLR contains the special number is queried through the short message center, thereby performing special processing for inter-network roaming according to the special number. Not only the message delivery between inter-network roaming users is implemented effectively, but also no additional interface or network element is required to be added, which saves the cost greatly compared with the related art.

No. of Pages : 28 No. of Claims : 12

(12) PATENT APPLICATION PUBLICATION
(19) INDIA
(22) Date of filing of Application :27/09/2012
(21) Application No.4019/CHE/2012 A
(43) Publication Date : 31/01/2014

(54) Title of the invention : TRANSFER ROBOT

(51) International classification :B25J
(31) Priority Document No :2011-278220
(32) Priority Date :20/12/2011
(33) Name of priority country :Japan
(86) International Application No :NA
Filing Date :NA
(87) International Publication No : NA
(61) Patent of Addition to Application Number :NA
Filing Date :NA
(62) Divisional to Application Number :NA
Filing Date :NA

(71)**Name of Applicant :**
1)KABUSHIKI KAISHA YASKAWA DENKI
Address of Applicant :2-1, KUROSAKI-SHIROISHI, YAHATANISHI-KU, KITAKYUSHU-SHI, FUKUOKA 806-0004 Japan
(72)**Name of Inventor :**
1)NOBUYUKI FURUKAWA
2)YUUKI OHARA

(57) Abstract :
A transfer robot includes a first arm having a base end portion rotatably connected to an arm base, a second arm having a base end portion rotatably connected to a tip end portion of the first arm, and a hand having a hand base rotatably connected to a tip end portion of the second arm, the hand serving to hold a substrate. The first arm includes a specified drive system arranged therein, and the second arm is driven by the first arm. A reflector plate is arranged between the first arm and the second arm and configured to upwardly reflect heat coming from the substrate held on the hand. Most Illustrative Drawing

No. of Pages : 32 No. of Claims : 6

(12) PATENT APPLICATION PUBLICATION
(19) INDIA
(22) Date of filing of Application :27/09/2012
(21) Application No.4020/CHE/2012 A
(43) Publication Date : 31/01/2014

(54) Title of the invention : TRANSFER ROBOT

(51) International classification :B25J
(31) Priority Document No :2011-278221
(32) Priority Date :20/12/2011
(33) Name of priority country :Japan
(86) International Application No :NA
Filing Date :NA
(87) International Publication No : NA
(61) Patent of Addition to Application Number :NA
Filing Date :NA
(62) Divisional to Application Number :NA
Filing Date :NA

(71)**Name of Applicant :**
1)KABUSHIKI KAISHA YASKAWA DENKI
Address of Applicant :2-1, KUROSAKI-SHIROISHI, YAHATANISHI-KU KITAKYUSHU-SHI, FUKUOKA 806-0004 Japan
(72)**Name of Inventor :**
1)NOBUYUKI FURUKAWA
2)KENSUKE OHNI

(57) Abstract :
A transfer robot includes a first arm having a base end portion rotatably connected to an arm base, the first arm including a specified drive system arranged therein, a second arm having a base end portion rotatably connected to a tip end portion of the first arm, and a hand having a hand base rotatably connected to a tip end portion of the second arm, the hand serving to hold a substrate. The first arm includes an arm housing provided with a plurality of air injection holes and at least one air exhaust hole are provided. The first arm is configured such that a compressed air injected through the air injection holes flows along an inner wall surface of the arm housing and flows out through the air exhaust hole. Most Illustrative Drawing:

No. of Pages : 33 No. of Claims : 7

(12) PATENT APPLICATION PUBLICATION
(19) INDIA
(22) Date of filing of Application :14/07/2009
(21) Application No.4133/CHENP/2009 A
(43) Publication Date : 31/01/2014

(54) Title of the invention : LINKED SHELL

(51) International classification :G06F1/32
(31) Priority Document No :11/627,860
(32) Priority Date :26/01/2007
(33) Name of priority country :U.S.A.
(86) International Application No :PCT/US2007/089228
Filing Date :31/12/2007
(87) International Publication No :WO 2008/091479
(61) Patent of Addition to Application Number :NA
Filing Date :NA
(62) Divisional to Application Number :NA
Filing Date :NA

(71)**Name of Applicant :**
1)MICROSOFT CORPORATION.,
Address of Applicant :ONE MICROSOFT WAY, REDMOND, WASHINGTON 98052-6399 U.S.A.
(72)**Name of Inventor :**
1)PARKS, GREGORY H
2)GEIDL, ERIK, MICHAEL,
3)FULLER, ANDREW JOHN

(57) Abstract :
An apparatus and method is provided for controlling a display device for displaying a user interface associated with an application. A processor for controlling peripheral devices and/or the display may be selected based on characteristics of a requested function to be performed. For example, a processor may be selected with a power characteristic corresponding to a power level needed to perform the requested function. Also, an instantiation of a user interface may be switched based on selection of the processor for controlling peripheral devices. In another example, the transition from one instantiation of the user interface to another instantiation of the user interface may be smooth such that a user may be unaware a change has been made.

No. of Pages : 37 No. of Claims : 20

(12) PATENT APPLICATION PUBLICATION
(19) INDIA
(22) Date of filing of Application :06/09/2012
(21) Application No.7711/CHENP/2012 A
(43) Publication Date : 31/01/2014

(54) Title of the invention : TRANSFER COATING FOR TEMPORARY PROTECTION

(51) International classification :B05D1/28, C09D5/00
(31) Priority Document No :61/305,382
(32) Priority Date :17/02/2010
(33) Name of priority country :U.S.A.
(86) International Application No :PCT/EP2011/052084
Filing Date :14/02/2011
(87) International Publication No : NA
(61) Patent of Addition to Application Number :NA
Filing Date :NA
(62) Divisional to Application Number :NA
Filing Date :NA

(71)**Name of Applicant :**
1)AKZO NOBEL COATINGS INTERNATIONAL B.V.
Address of Applicant :Velperweg 76 NL-6824 BM Arnhem The Netherlands
(72)**Name of Inventor :**
1)VAN DEN BERG Keimpe Jan
2)FORT Dominique
3)VAN GINNEKEN Mark Johannes Maria
4)VAN DER PUT Petrus Leonardus

(57) Abstract :
The invention relates to a process of applying a temporary protective coating to a substrate comprising the steps of: a) providing a laminate comprising i) a flexible carrier substrate and ii) a coating layer prepared by applying by spreading spraying or flow coating an aqueous coating composition comprising at least one water based film- forming polymer and solid particles of an amino resin based polymer to the flexible carrier substrate and drying the applied coating composition and b) transferring the coating from the flexible carrier substrate to a second substrate to provide the second substrate with a temporary protective coating.

No. of Pages : 14 No. of Claims : 10

(12) PATENT APPLICATION PUBLICATION
(19) INDIA
(22) Date of filing of Application :12/09/2012
(21) Application No.7904/CHENP/2012 A
(43) Publication Date : 31/01/2014

(54) Title of the invention : THE USE OF LINEAR TRIETHYLENTETRAMINE AS CURING AGENT FOR EPOXY RESINS

(51) International classification :C08G 59/40
(31) Priority Document No :10155179.4
(32) Priority Date :02/03/2010
(33) Name of priority country :EPO
(86) International Application No :PCT/EP2011/053119
Filing Date :02/03/2011
(87) International Publication No : NA
(61) Patent of Addition to Application Number :NA
Filing Date :NA
(62) Divisional to Application Number :NA
Filing Date :NA

(71)**Name of Applicant :**
1)BASF SE
Address of Applicant :67056 Ludwigshafen Germany
(72)**Name of Inventor :**
1)SUTER Dominic
2)KINSCHERFF Manfred
3)DAHMEN Kirsten
4)HEISING Hendrik
5)KAFFEE Achim
6)MELDER Johann-Peter
7)BUSCHHAUS Boris
8)HUYGHE Kevin
9)CAUWENBERGE Gunther van

(57) Abstract :
The present invention relates to an amine composition comprising linear triethylenetetramine and one or more amine compounds selected from the group consisting of tertiary amines derived from the condensation of ethylenediamine and methyl- substituted compounds derived from linear triethylenetetramine as well as a method of production for said composition. The present invention also relates to the use of linear triethylenetetramine or an amine composition according to the invention as amine curing agents. The present invention also relates to amine curing agent compositions comprising linear triethylenetetramine as well as to curable compositions comprising linear triethylenetetramine and to a method for producing said curable compositions. Additionally, the present invention relates to a cured epoxy resin comprising linear triethylenetetramine, especially a reinforced composite, and a method for producing said cured epoxy resins. Furthermore, the present invention relates to reactive polyamide resins obtainable from linear triethylenediamine and dimer fatty acids. The present invention relates to an amine compositioncomprising linear triethylene-tetramine andone or more amine compounds selected from the group consisting of tertiary amines derived from the condensation of ethylenediamine and methyl- substituted compounds derived from linear triethylenetetramine as well as a method of production for said composition. The present invention also relates to the use of linear triethylenetetramine or an amine composition according to the invention as amine curing agents. The present invention also relates to amine curing agent compositions comprising linear triethylenetetramine as well as to curable compositions comprising linear triethyl- enetetramineand to a method for producing said curable compositions. Additionally, the present invention relates to a cured epoxy resin comprising linear triethylenetetramine, especially a reinforced composite, and a method for producing said cured epoxy resins. Furthermore, the present invention relates to reactive polyamide resins obtainable from linear triethylenediamine and dimer fatty acids.

No. of Pages : 39 No. of Claims : 22

(12) PATENT APPLICATION PUBLICATION
(19) INDIA
(22) Date of filing of Application :30/12/2010
(21) Application No.4015/CHE/2010 A
(43) Publication Date : 31/01/2014

(54) Title of the invention : AN IMPROVED SLIVER CAN ARRANGEMENT IN A TEXTILE SPINNING PREPARATORY MACHINE

(51) International classification :D01H
(31) Priority Document No :NA
(32) Priority Date :NA
(33) Name of priority country :NA
(86) International Application No :NA
Filing Date :NA
(87) International Publication No : NA
(61) Patent of Addition to Application Number :NA
Filing Date :NA
(62) Divisional to Application Number :NA
Filing Date :NA

(71)**Name of Applicant :**
1)LAKSHMI MACHINE WORKS LTD.
Address of Applicant :PERIANAICKENPALAYAM, COIMBATORS 641 020 Tamil Nadu India
(72)**Name of Inventor :**
1)SELVARAJ GANESHKUMAR
2)VELANGANNI JOHN LAWRENCE

(57) Abstract :
According to the present invention, the improved sliver can arrangement in a combing machine comprises a plurality of combing heads which are arranged in series along the machine; a suction unit; a sliver delivery station at the end of the machine; a plurality of reserve cans provided on the platform of said sliver delivery station; a sliver filling station; a drafting unit over the said sliver filling station; a sliver filling can placed on the rotating plate of the said filling station, in which at least one reserve can is placed between the combing head and said sliver filling station. Figure-2

‘

No. of Pages : 18 No. of Claims : 9

(12) PATENT APPLICATION PUBLICATION
(19) INDIA
(22) Date of filing of Application :27/09/2012
(21) Application No.4016/CHE/2012 A
(43) Publication Date : 31/01/2014

(54) Title of the invention : ELECTRICALLY-OPERATED TWO-WHEELED VEHICLE

(51) International classification :B62K25/00
(31) Priority Document No :20116-217102
(32) Priority Date :30/09/2011
(33) Name of priority country :Japan
(86) International Application No :NA
Filing Date :NA
(87) International Publication No : NA
(61) Patent of Addition to Application Number :NA
Filing Date :NA
(62) Divisional to Application Number :NA
Filing Date :NA

(71)**Name of Applicant :**
1)HONDA MOTOR CO., LTD.
Address of Applicant :1-1, MINAMI-AOYAMA 2-CHOME, MINATO-KU, TOKYO, 107-8556 Japan
(72)**Name of Inventor :**
1)KAJIHARA, EISUKE
2)KATAOKA, DAI
3)ADACHI, JUN
4)ONO, JUNYA
5)ITO, ASUKA

(57) Abstract :
[Designation of Document] [Problem] To provide an electrically-operated two-wheeled vehicle which can prevent a height position of a lower surface of a swing unit from becoming excessively low even when two rotary electric machines are arranged in the swing unit, can make the swing unit thin, and can cope with a wide operation region. [Means for Resolution] In the electrically-operated two-wheeled vehicle 10 provided with a swing unit 12 which pivotally supports a drive wheel WR in a state where the swing unit 12 is mounted on a vehicle body, the swing unit 12 includes: a first rotary electric machine 24 which includes a first rotor 3 8; a second rotary electric machine 64 which includes a second rotor 78; and a planetary gear mechanism 3 0 which combines a rotational drive force of the first rotor 3 8 and a rotational drive force of the second rotor 78 to each other and transmits a product of rotational drive forces to a drive wheel WR in a state where a rotational speed is increased, and the first rotary electric machine 24 and the second rotary electric machine 64 are arranged parallel to each other in the longitudinal direction of a vehicle such that an axis Ax2 of the second rotor 78 is positioned in front of an axis Ax1 of the first rotor 3 8 along the vehicle body. ‘’

‘

No. of Pages : 64 No. of Claims : 6

(12) PATENT APPLICATION PUBLICATION
(19) INDIA
(22) Date of filing of Application :27/09/2012
(21) Application No.4017/CHE/2012 A
(43) Publication Date : 31/01/2014

(54) Title of the invention : SOLID RAIL BI BOND (SRBB)

(51) International classification :E01B7/00
(31) Priority Document No :PI 2012003399
(32) Priority Date :27/07/2012
(33) Name of priority country :Malaysia
(86) International Application No :NA
Filing Date :NA
(87) International Publication No : NA
(61) Patent of Addition to Application Number :NA
Filing Date :NA
(62) Divisional to Application Number :NA
Filing Date :NA

(71)**Name of Applicant :**
1)R.P.RAJAN
Address of Applicant :23, JALAN SS14/6M, 47500 SUBANG JAYA, SELANGOR, MALAYSIA'
(72)**Name of Inventor :**
1)R.P.RAJAN

(57) Abstract :
The invention related to innovation of Railway turnout is to enhance many aspects for comfortable railway locomotion and reducing complicated manufacturing process. In any part of the Solid Rail Bi Bond (SRBB) the innovated railway turnout, the rails involved will be of full cross section without any cut, splice or reducing the original size of the rail section. The canting system is available throughout the turnout even without an exemption on switches and crossing if canted rails are used in the manufacturing process.

No. of Pages : 12 No. of Claims : 10

(12) PATENT APPLICATION PUBLICATION
(19) INDIA
(22) Date of filing of Application :14/07/2009
(21) Application No.4127/CHENP/2009 A
(43) Publication Date : 31/01/2014

(54) Title of the invention : FUSED AROMATIC PTP-IB INHIBITORS

(51) International classification :C07F9/60
(31) Priority Document No :60/897,700
(32) Priority Date :26/01/2007
(33) Name of priority country :U.S.A.
(86) International Application No :PCT/CA2008/000172
Filing Date :24/01/2008
(87) International Publication No :WO 2008/089581
(61) Patent of Addition to Application Number :NA
Filing Date :NA
(62) Divisional to Application Number :NA
Filing Date :NA

(71)**Name of Applicant :**
1)MERCK FROSST CANADA LTD.
Address of Applicant :16711 TRANS-CANADA HIGHWAY, KIRKLAND, QUEBEC H9H 3LI, Canada
(72)**Name of Inventor :**
1)COLUCCI, JOHN
2)WILSON, MARIE-CLAIRE
3)HAN, YONGXIN,
4)DUFRESNE, CLAUDE
5)BELLEY, MICHEL
6)LAU, CHEUK,.K.
7)AYLY, CHRISTOPHER,

(57) Abstract :
The invention encompasses the novel class of compounds represented by the formula below, which are inhibitors of the PTP-IB enzyme. The invention also encompasses pharmaceutical compositions which include the compounds shown (Formula I) above and methods of treating or preventing PTP-IB mediated diseases, including diabetes.

No. of Pages : 45 No. of Claims : 12

(12) PATENT APPLICATION PUBLICATION
(19) INDIA
(22) Date of filing of Application :13/09/2012
(21) Application No.7911/CHENP/2012 A
(43) Publication Date : 31/01/2014

(54) Title of the invention : METHOD AND APPARATUS FOR RELIABLE TRANSMISSION OF CONTROL INFORMATION IN A WIRELESS COMMUNICATION NETWORK

(51) International classification :H04L 1/00
(31) Priority Document No :61/318,168
(32) Priority Date :26/03/2010
(33) Name of priority country :U.S.A.
(86) International Application No :PCT/US2011/030079
Filing Date :25/03/2011
(87) International Publication No : NA
(61) Patent of Addition to Application Number :NA
Filing Date :NA
(62) Divisional to Application Number :NA
Filing Date :NA

(71)**Name of Applicant :**
1)QUALCOMM Incorporated
Address of Applicant :Attn: International IP Administration 5775 Morehouse Drive San Diego California 92121-1714 USA.
(72)**Name of Inventor :**
1)CHEN Wanshi
2)LUO Tao

(57) Abstract :
Techniques for reliably transmitting and receiving control information in a wireless network are described. A ceil may typically send control information on a control channel and associated data (e.g., system information) on a data channel in the same subframe. This subframe may have strong interference from other cells. For cross-subframe signaling, the cell may transmit the control information in a first subframe and the associated data in a second subframe. The first subframe may be a usable subframe for the cell and may have less interference from other cells. A UE may not know the location of the first subframe and may perform window-based decoding. The UE may decode the control channel in at least one subframe within a decoding window covering the first subframe to obtain the control information. The UE may then decode the data channel in the second subframe based on the control information to obtain the data.

No. of Pages : 44 No. of Claims : 39

(12) PATENT APPLICATION PUBLICATION
(19) INDIA
(22) Date of filing of Application :13/09/2012
(21) Application No.7912/CHENP/2012 A
(43) Publication Date : 31/01/2014

(54) Title of the invention : METHOD SYSTEM AND APPARATUS OF MULTI-SUBFRAME SCHEDULING

(51) International classification :H04W 72/00
(31) Priority Document No :201010131399.9
(32) Priority Date :22/03/2010
(33) Name of priority country :China
(86) International Application No :PCT/CN2011/072026
Filing Date :22/03/2011
(87) International Publication No : NA
(61) Patent of Addition to Application Number :NA
Filing Date :NA
(62) Divisional to Application Number :NA
Filing Date :NA

(71)**Name of Applicant :**
1)Huawei Technologies Co. Ltd.
Address of Applicant :Huawei Administration Building Bantian Longgang District Shenzhen Guangdong 518129 P.R. China. China
(72)**Name of Inventor :**
1)LI Bo
2)LV Yongxia
3)CHEN Yuhua
4)LI Chaojun

(57) Abstract :
The present invention discloses a method, system and apparatus of multi-subframe scheduling. The method of multi-subframe scheduling comprises: sending a terminal a continuous scheduling indication, a Hybrid Automatic Repeat Request process number corresponding to a first scheduled subframe, and a scheduling configuration parameter of multi-subframe scheduling; acquiring a Hybrid Automatic Repeat Request process number corresponding to a currently-scheduling subframe according to the Hybrid Automatic Repeat Request process number corresponding to the first scheduled subframe and the continuous scheduling indication, and performing a data packet transmission of the corresponding Hybrid Automatic Repeat Request process number in the currently-scheduling subframe by using the scheduling configuration parameter, each scheduled subframe of the multi-subframe scheduling carrying one data packet, and each scheduled suframe of the multi-subframe scheduling using the scheduling configuration parameter. The embodiments of the present invention can realize multi-subframe scheduling by sending the Hybrid Automatic Repeat Request process number of the each currently-scheduling subframe and the continuous scheduling indication, saving control signaling overhead of the system and improving spectrum efficiency of the system.

No. of Pages : 55 No. of Claims : 23

(12) PATENT APPLICATION PUBLICATION
(19) INDIA
(22) Date of filing of Application :13/09/2012
(21) Application No.7913/CHENP/2012 A
(43) Publication Date : 31/01/2014

(54) Title of the invention : SYSTEM AND METHOD FOR FRAME BUFFER STORAGE AND RETRIEVAL IN ALTERNATING ORIENTATIONS

(51) International classification :G06F 3/147
(31) Priority Document No :12/726,259
(32) Priority Date :17/03/2010
(33) Name of priority country :U.S.A.
(86) International Application No :PCT/US2011/027434
Filing Date :07/03/2011
(87) International Publication No : NA
(61) Patent of Addition to Application Number :NA
Filing Date :NA
(62) Divisional to Application Number :NA
Filing Date :NA

(71)**Name of Applicant :**
1)QUALCOMM MEMS Technologies Inc.
Address of Applicant :5775 Morehouse Drive San Diego California 92121 USA
(72)**Name of Inventor :**
1)TODOROVICH Mark M.

(57) Abstract :
The present invention provides a method and apparatus for storing image data for successive frames in a frame buffer. Specifically, the method and apparatus allow for a display-sized frame buffer to be utilized where a host system provides image data in a format different from (hat which the display requires to be written to it while retaining the beneficial aspects of concurrent read and write operations from and to the frame buffer. Using this method a buffer controller receives image data from a host, system in a first format (e.g. row-by-row) and writes it to the frame buffer in the first format. When the buffer is completely filled with the first frame, it is read out in a second format (e.g. column-by-column) by the buffer controller and provided to a display driver that writes the data to the display. As the first frame is read out in the second format, the buffer controller receives image data for a second frame from the host system in the first format, but rotates it before writing it to the frame buffer such that it is written to the frame buffer in the second format. This rotation allows the buffer controller to write to the frame buffer and the display driver to read from the frame buffer concurrently, despite the different image data format requirements of the host system and display. When the second frame is completely written to the buffer in the second format, the buffer controller then reads the buffer in the first format, and writes it to the display. At this point the process repeals. Thus, the benefits of concurrent read and write are preserved.

No. of Pages : 41 No. of Claims : 22

(12) PATENT APPLICATION PUBLICATION
(19) INDIA
(22) Date of filing of Application :13/09/2012
(21) Application No.7914/CHENP/2012 A
(43) Publication Date : 31/01/2014

(54) Title of the invention : COMMUNICATION SYSTEM AND ELECTRONIC CHOKE CIRCUIT

(51) International classification :H03H 11/40
(31) Priority Document No :2010-031576
(32) Priority Date :16/02/2010
(33) Name of priority country :Japan
(86) International Application No :PCT/JP2010/062199
Filing Date :21/07/2010
(87) International Publication No : NA
(61) Patent of Addition to Application Number :NA
Filing Date :NA
(62) Divisional to Application Number :NA
Filing Date :NA

(71)**Name of Applicant :**
1)Panasonic Corporation
Address of Applicant :1006 Oaza Kadoma Kadoma-shi Osaka 571-8501 Japan
(72)**Name of Inventor :**
1)Kenji KUNIYOSHI

(57) Abstract :
The object of the invention is to propose a communication system using an electronic choke circuit which has impedance slightly varied with a load variation and is prevented from having negative resistance and can stabilize circuit operation. A terminal device includes an electronic choke circuit separating DC power supplied from a management device and a communication signal from each other. The electronic choke circuit includes a variable impedance element constituted by a transistor having its collector and its emitter respectively connected to a first terminal and a third terminal, and an inductor and a resistor connected in series with the variable impedance element. A series circuit of a first resistor and a first capacitor is interposed between the first terminal and a second terminal, and the first capacitor has its one end connected to a base of the variable impedance element. A second capacitor is interposed between the third terminal and a fourth terminal. A second resistor suppresses a phenomenon that resistance characteristics of a circuit between an input terminal and an output terminal have a negative resistance region within a frequency band including a frequency of the communication signal.

No. of Pages : 32 No. of Claims : 5

(12) PATENT APPLICATION PUBLICATION
(19) INDIA
(22) Date of filing of Application :31/12/2010
(21) Application No.4046/CHE/2010 A
(43) Publication Date : 31/01/2014

(54) Title of the invention : A METHOD AND AN APPARATUS FOR SUPERVISION OF CURRENT TRANSFORMER IN A DIFFERENTIAL PROTECTION SYSTEM

(51) International classification :H02H3/00
(31) Priority Document No :NA
(32) Priority Date :NA
(33) Name of priority country :NA
(86) International Application No :NA
Filing Date :NA
(87) International Publication No : NA
(61) Patent of Addition to Application Number :NA
Filing Date :NA
(62) Divisional to Application Number :NA
Filing Date :NA

(71)**Name of Applicant :**
1)ABB TECHNOLOGY LTD
Address of Applicant :AFFOLTERNSTRASSE 44, CH-8050 ZURICH Switzerland
(72)**Name of Inventor :**
1)JUHA YLINEN
2)NAYAN SHAH
3)MURALI KANDAKATKA

(57) Abstract :
A method and an apparatus for supervising the operation of a plurality of current transformers and prevention of any malfunction, more specifically, false tripping of power in an electrical system is provided. The method used according to an embodiment in the invention involves measurement of current parameters (magnitude and phase angle) for each phase current separately from each winding with the CT sets (triplets). Negative sequence current, a condition parameter, is calculated for each CT set from measured phase currents and on detection of current zero state, a fault condition, the change in the negative sequence current from measurements made with a reference healthy CT in the electrical system is determined. The extent of change in the negative sequence current is used for determining the health of electrical equipments in the electrical system. The invention provides phase angle difference parameter derived from phase measurements between two healthy CT as an additional condition parameter for reliable operation of equipments in the electrical system. A suitable condition parameter or set of condition parameters are selected based on the power equipment load condition.

No. of Pages : 26 No. of Claims : 10

(12) PATENT APPLICATION PUBLICATION
(19) INDIA
(22) Date of filing of Application :10/09/2012
(21) Application No.7779/CHENP/2012 A
(43) Publication Date : 31/01/2014

(54) Title of the invention : SYSTEM AND METHOD OF PROCESSING HIERARCHICAL VERY LONG INSTRUCTION PACKETS

(51) International classification :G06F 9/30
(31) Priority Document No :12/716,359
(32) Priority Date :03/03/2010
(33) Name of priority country :U.S.A.
(86) International Application No :PCT/US2011/026815
Filing Date :02/03/2011
(87) International Publication No : NA
(61) Patent of Addition to Application Number :NA
Filing Date :NA
(62) Divisional to Application Number :NA
Filing Date :NA

(71)**Name of Applicant :**
1)QUALCOMM INCORPORATED
Address of Applicant :Attn: International IP Administration 5775 Morehouse Drive San Diego California 92121-1714 United States of America
(72)**Name of Inventor :**
1)CODRESCU Lucian
2)PLONDKE Erich James
3)INGLE Ajay Anant
4)VENKUMAHANTI Suresh K.
5)TABONY Charles Joseph

(57) Abstract :
A system and method of processing a hierarchical very long instruction word (VLIW) packet is disclosed. In a particular embodiment a method of processing instructions is disclosed. The method includes receiving a hierarchical VLIW packet of instructions and decoding an instruction from the packet to determine whether the instruction is a single instruction or whether the instruction includes a subpacket that includes a plurality of sub-instructions. The method also includes in response to determining that the instruction includes the subpacket executing each of the sub-instructions.

No. of Pages : 29 No. of Claims : 23

(12) PATENT APPLICATION PUBLICATION
(19) INDIA
(22) Date of filing of Application :10/09/2012
(21) Application No.7780/CHENP/2012 A
(43) Publication Date : 31/01/2014

(54) Title of the invention : ENCODING DEVICE AND ENCODING METHOD DECODING DEVICE AND DECODING METHOD AND PROGRAM

(51) International classification :G10L 19/02
(31) Priority Document No :2010-061171
(32) Priority Date :17/03/2010
(33) Name of priority country :Japan
(86) International Application No :PCT/JP2011/055294
Filing Date :08/03/2011
(87) International Publication No : NA
(61) Patent of Addition to Application Number :NA
Filing Date :NA
(62) Divisional to Application Number :NA
Filing Date :NA

(71)**Name of Applicant :**
1)SONY CORPORATION
Address of Applicant :1-7-1 Konan Minato-ku Tokyo 108-0075 Japan
(72)**Name of Inventor :**
1)SHIRO SUZUKI
2)YUUKI MATSUMURA
3)YASUHIRO TOGURI
4)YUUJI MAEDA

(57) Abstract :
The present invention relates to an encoding device and an encoding method, a decoding device and a decoding method, and a program that reduce deterioration of sound quality due to encoding of audio signals, An envelope emphasis part (51) emphasizes an envelope (ENV). A noise shaping part (52) divides an emphasized envelope (D) formed by emphasis of the envelope (ENV) by a value larger than 1, and subtracts noise shaping (G) specified by information (NS) from a result of the division. A quantization part (14} sets a result of the subtraction as a quantization bit count (WL), and quantizes a normalized spectrum (S1) formed by normalization of a spectrum (SO) based on the quantization bit count (WL) . A multiplexing part (53) multiplexes the information (NS), a quantized spectrum (QS) formed by quantization of the normalized spectrum (S1) , and the envelope- (ENV) . The present invention can be applied to an encoding device encoding audio signals, for example.

No. of Pages : 103 No. of Claims : 14

(12) PATENT APPLICATION PUBLICATION
(19) INDIA
(22) Date of filing of Application :14/09/2012
(21) Application No.7976/CHENP/2012 A
(43) Publication Date : 31/01/2014

(54) Title of the invention : NEGOTIATION OF QUALITY OF SERVICE (QOS) INFORMATION FOR NETWORK MANAGEMENT TRAFFIC IN A WIRELESS LOCAL AREA NETWORK (WLAN)

(51) International classification :H04W 72/12
(31) Priority Document No :2696037
(32) Priority Date :15/03/2010
(33) Name of priority country :Canada
(86) International Application No :PCT/IB2011/051044
Filing Date :11/03/2011
(87) International Publication No : NA
(61) Patent of Addition to Application Number :NA
Filing Date :NA
(62) Divisional to Application Number :NA
Filing Date :NA

(71)**Name of Applicant :**
1)Research In Motion Limited
Address of Applicant :295 Phillip Street Waterloo Ontario N2L 3W8 Canada. Canada
(72)**Name of Inventor :**
1)MONTEMURRO Michael Peter
2)MCCANN Stephen

(57) Abstract :
An access point (10 100) advertises a management frame quality of service MFQ policy (133) that defines an access category used for transmitting a first type of management frame. Each mobile station (14 200) associated with the access point is to prioritize transmission of management frames according to the MFQ policy advertised by the access point unless a policy configuration request for the mobile station to prioritize transmission of management frames according to a different MFQ policy has been accepted.

No. of Pages : 37 No. of Claims : 25

(12) PATENT APPLICATION PUBLICATION
(19) INDIA
(22) Date of filing of Application :07/09/2012
(21) Application No.7777/CHENP/2012 A
(43) Publication Date : 31/01/2014

(54) Title of the invention : PUBLIC POWER SOURCE SYSTEM

(51) International classification :H02J 13/00
(31) Priority Document No :2010-058486
(32) Priority Date :15/03/2010
(33) Name of priority country :Japan
(86) International Application No :PCT/JP2011/055984
Filing Date :14/03/2011
(87) International Publication No : NA
(61) Patent of Addition to Application Number :NA
Filing Date :NA
(62) Divisional to Application Number :NA
Filing Date :NA

(71)**Name of Applicant :**
1)TOKYO ELECTRIC POWER COMPANY INCORPORATED
Address of Applicant :1-3 UCHISAIWAI-CHO 1-CHOME CHIYODA-KU TOKYO 100-8560 Japan.
(72)**Name of Inventor :**
1)TOMIYAMA Shota
2)MURAKI Kengo
3)SHIGEHARA Masayuki

(57) Abstract :
To provide a public power source system by which it is possible to use power in a public location both conveniently and safely without erroneous operations. A outlet 11, to which power is supplied from a distribution line 13, is installed in advance in a predetermined public location and a communication terminal 32 requesting the outlet 11 to supply power and a center server 31 are connected in advance via an Internet 33 and when there is a request to the outlet 11 to supply power, the center server 31 outputs a current supply command to a current control unit 14 via a communication network (Internet 24 or telephone network 25) and the current control unit 14 permits supply of a current to be supplied to the outlet 11 when there is a current supply command and there is information to allow supply of a current to the outlet generated using a remote control prevention device installed near the outlet.

No. of Pages : 91 No. of Claims : 22

(12) PATENT APPLICATION PUBLICATION
(19) INDIA
(22) Date of filing of Application :14/09/2012
(21) Application No.7971/CHENP/2012 A
(43) Publication Date : 31/01/2014

(54) Title of the invention : MANAGEMENT SYSTEM AND COMPUTER SYSTEM MANAGEMENT METHOD

(51) International classification :G06F 11/30
(31) Priority Document No :NA
(32) Priority Date :NA
(33) Name of priority country :NA
(86) International Application No :PCT/JP2010/060064
Filing Date :14/06/2010
(87) International Publication No : NA
(61) Patent of Addition to Application Number :NA
Filing Date :NA
(62) Divisional to Application Number :NA
Filing Date :NA

(71)**Name of Applicant :**
1)HITACHI LTD.
Address of Applicant :6-6 Marunouchi 1-chome Chiyoda-ku Tokyo 100-8280 Japan
(72)**Name of Inventor :**
1)SUGATA Yuki
2)KURODA Takaki
3)HASHIMOTO Yoshihiro

(57) Abstract :
A system management device for managing a computer system receives plug-in distribution data from a plug-in distribution device. The plug-in distribution data has plug-in definition information and template definition information. The system management device obtains information from a device to be managed by using the plug-in definition information and determines whether or not to issue a warning on the basis of the template definition information. A user can set a threshold without hesitation by distributing together the plug-in and the template.

No. of Pages : 106 No. of Claims : 12

(12) PATENT APPLICATION PUBLICATION
(19) INDIA
(22) Date of filing of Application :14/09/2012
(21) Application No.7972/CHENP/2012 A
(43) Publication Date : 31/01/2014

(54) Title of the invention : MANAGEMENT SYSTEM AND COMPUTER SYSTEM MANAGEMENT METHOD

(51) International classification :G06F 13/00
(31) Priority Document No :NA
(32) Priority Date :NA
(33) Name of priority country :NA
(86) International Application No :PCT/JP2010/060999
Filing Date :28/06/2010
(87) International Publication No : NA
(61) Patent of Addition to Application Number :NA
Filing Date :NA
(62) Divisional to Application Number :NA
Filing Date :NA

(71)**Name of Applicant :**
1)HITACHI LTD.
Address of Applicant :6-6 Marunouchi 1-chome Chiyoda-ku Tokyo 100-8280 Japan
(72)**Name of Inventor :**
1)MATSUMOTO Masayoshi
2)KURODA Takaki
3)FUKUDA Satoshi
4)BENIYAMA Nobuo
5)SATOMI Mitsunori

(57) Abstract :
A management device for managing a computer systems stores configuration information of a plurality of management target devices on the basis of a plurality of pieces of first information received from the plurality of management target devices. The management device determines whether or not a plurality of pieces of second information should be acquired from the plurality of management target devices using a plurality of pieces of additional component information on the basis of the configuration information and a plurality pieces of additional component application condition information. When the management device determines to acquire the information the management device uses the plurality of pieces of additional component information to receive the plurality of pieces of second information from the plurality of management target devices and creates or updates information for managing the plurality of management target devices on the basis of the plurality of pieces of second information.

No. of Pages : 111 No. of Claims : 13

(12) PATENT APPLICATION PUBLICATION
(19) INDIA
(22) Date of filing of Application :14/09/2012
(21) Application No.7974/CHENP/2012 A
(43) Publication Date : 31/01/2014

(54) Title of the invention : NETWORK REGISTRATION PROCEDURES

(51) International classification :H04W 8/18
(31) Priority Document No :61/320,598
(32) Priority Date :02/04/2010
(33) Name of priority country :U.S.A.
(86) International Application No :PCT/US2011/031016
Filing Date :01/04/2011
(87) International Publication No : NA
(61) Patent of Addition to Application Number :NA
Filing Date :NA
(62) Divisional to Application Number :NA
Filing Date :NA

(71)**Name of Applicant :**
1)QUALCOMM Incorporated
Address of Applicant :Attn: International IP Administration 5775 Morehouse Drive San Diego California 92121-1714 USA.
(72)**Name of Inventor :**
1)ATARIUS Roozbeh
2)TINNAKORNSRISUPHAP Peerapol
3)OTT David A.
4)SUBRAMANIAN Ramachandran

(57) Abstract :
A method of communication involves sending (204) a request from a first network entity (e.g. a femto convergence server) to a second network entity (e.g. a home subscriber server) for user data relating to an access point receiving (208) a response to the request wherein the response identifies at least one application server and sending (210) registration status information to the identified at least one application server.

No. of Pages : 77 No. of Claims : 68

(12) PATENT APPLICATION PUBLICATION
(19) INDIA
(22) Date of filing of Application :14/09/2012
(21) Application No.7975/CHENP/2012 A
(43) Publication Date : 31/01/2014

(54) Title of the invention : ADVERTISEMENT OF QUALITY OF SERVICE (QOS) INFORMATION FOR NETWORK MANAGEMENT TRAFFIC IN A WIRELESS LOCAL AREA NETWORK (WLAN)

(51) International classification :H04W 72/12
(31) Priority Document No :2696037
(32) Priority Date :15/03/2010
(33) Name of priority country :Canada
(86) International Application No :PCT/IB2011/051040
Filing Date :11/03/2011
(87) International Publication No : NA
(61) Patent of Addition to Application Number :NA
Filing Date :NA
(62) Divisional to Application Number :NA
Filing Date :NA

(71)**Name of Applicant :**
1)Research In Motion Limited
Address of Applicant :295 Phillip Street Waterloo Ontario N2L 3W8 Canada.
(72)**Name of Inventor :**
1)MONTEMURRO Michael Peter
2)MCCANN Stephen

(57) Abstract :
An access point (10 100) advertises a management frame quality of service MFQ policy (133) that defines an access category used for transmitting a first type of management frame. Each mobile station (14 200) associated with the access point is to prioritize transmission of management frames according to the MFQ policy advertised by the access point unless a policy configuration request for the mobile station to prioritize transmission of management frames according to a different MFQ policy has been accepted.

No. of Pages : 38 No. of Claims : 33

(12) PATENT APPLICATION PUBLICATION
(19) INDIA
(22) Date of filing of Application :10/09/2012
(21) Application No.7815/CHENP/2012 A
(43) Publication Date : 31/01/2014

(54) Title of the invention : DEVICE AND METHOD FOR DYNAMICALLY CONFIGURING DISCONTINUOUS RECEPTION PARAMETERS

(51) International classification :H04W 52/02
(31) Priority Document No :201010219907.9
(32) Priority Date :06/07/2010
(33) Name of priority country :China
(86) International Application No :PCT/CN2011/072810
Filing Date :14/04/2011
(87) International Publication No : NA
(61) Patent of Addition to Application Number :NA
Filing Date :NA
(62) Divisional to Application Number :NA
Filing Date :NA

(71)**Name of Applicant :**
1)ZTE CORPORATION
Address of Applicant :ZTE Plaza Keji Road South Hi-Tech Industrial Park Nanshan Shenzhen Guangdong 518057 China
(72)**Name of Inventor :**
1)Haisheng XU

(57) Abstract :
The present invention provides a device and a method for dynamically configuring Discontinuous Reception parameters and the method includes: when DRX parameters of a terminal need to be adjusted the DRX parameters are adjusted until the terminal satisfies the requirement of the Guaranteed Bit Rate after the adjustment of DRX and then the DRX parameters are no longer adjusted. Adopting the technical scheme of the present invention can make a base station adapt to the power-saving and performance requirement of the terminal in real time by a dynamic estimation of the DRX adjusted parameters of the terminal in addition it can also satisfy the requirement for the signaling load in different circumstances by configuring an adjusted cycle.

No. of Pages : 26 No. of Claims : 16

(12) PATENT APPLICATION PUBLICATION
(19) INDIA
(22) Date of filing of Application :10/09/2012
(21) Application No.7816/CHENP/2012 A
(43) Publication Date : 31/01/2014

(54) Title of the invention : METHOD AND DEVICE FOR SENDING INTER-FREQUENCY MEASUREMENT CONFIGURATIONS DOWNWARDS

(51) International classification :H04W 36/00
(31) Priority Document No :201010195666.9
(32) Priority Date :01/06/2010
(33) Name of priority country :China
(86) International Application No :PCT/CN2010/080649
Filing Date :31/12/2010
(87) International Publication No : NA
(61) Patent of Addition to Application Number :NA
Filing Date :NA
(62) Divisional to Application Number :NA
Filing Date :NA

(71)**Name of Applicant :**
1)ZTE CORPORATION
Address of Applicant :ZTE Plaza Keji Road South Hi-Tech Industrial Park Nanshan Shenzhen Guangdong 518057 China
(72)**Name of Inventor :**
1)Xingang WANG
2)Jiaying YOU
3)Xiaoxi JING

(57) Abstract :
A method for sending inter-frequency measurement configurations is disclosed, including: an eNB performing a swap action on a measurement configuration copy formed according to a measurement configuration to obtain a first measurement configuration; the eNB generating a second measurement configuration according to its own configuration and UE capability, and comparing the second measurement configuration with the first one; if the first and second measurement configuration are the same, the measurement configurations being not filled in the controlling message; if the first measurement configuration is a part of the second measurement configuration, in the controlling message, the extra measurement configuration being put in an adding list at the destination side; if they are different, in the controlling message, the first measurement configuration being put in a deleting list, the second one being put in the adding list; and the eNB sending a RRC connection reconfiguring message to the UE.

No. of Pages : 35 No. of Claims : 15

(12) PATENT APPLICATION PUBLICATION
(19) INDIA
(22) Date of filing of Application :10/09/2012
(21) Application No.7817/CHENP/2012 A
(43) Publication Date : 31/01/2014

(54) Title of the invention : TRANSMISSION RATE CONTROL METHOD MOBILE STATION AND RADIO NETWORK CONTROLLER

(51) International classification :H04L 29/08
(31) Priority Document No :2005-004546
(32) Priority Date :11/01/2005
(33) Name of priority country :Japan
(86) International Application No :PCT/JP2006/300203
Filing Date :11/01/2006
(87) International Publication No : NA
(61) Patent of Addition to Application Number :NA
Filing Date :NA
(62) Divisional to Application Number :3519/CHENP/2007
Filed on :13/08/2007

(71)**Name of Applicant :**
1)NTT DoCoMo Inc.
Address of Applicant :11-1 Nagatacho 2-chome Chiyoda-ku Tokyo 100-6510 Japan
(72)**Name of Inventor :**
1)USUDA Masafumi
2)UMESH Anil
3)NAKAMURA Takehiro

(57) Abstract :
A transmission control rate method for controlling a transmission rate of user data transmitted by a mobile station via an uplink include: notifying at a radio network controller a maximum allowable transmission rate of the user data to the mobile station when a mobile station starts communications or when a cell to which the mobile station is to be connected is changed; and automatically increasing at the mobile station the transmission rate of the user data to the maximum allowable transmission rate that is notified by the radio network controller.

No. of Pages : 42 No. of Claims : 2

(12) PATENT APPLICATION PUBLICATION
(19) INDIA
(22) Date of filing of Application :10/09/2012
(21) Application No.7818/CHENP/2012 A
(43) Publication Date : 31/01/2014

(54) Title of the invention : VAPOR COMPRESSIONS STEAM STRIPPING

(51) International classification :C07C 51/44
(31) Priority Document No :61/305,530
(32) Priority Date :17/02/2010
(33) Name of priority country :U.S.A.
(86) International Application No :PCT/US2011/025225
Filing Date :17/02/2011
(87) International Publication No : NA
(61) Patent of Addition to Application Number :NA
Filing Date :NA
(62) Divisional to Application Number :NA
Filing Date :NA

(71)**Name of Applicant :**
1)ALGENOL BIOFUELS INC.
Address of Applicant :28100 Bonita Grande Drive Suite 200 Bonita Springs FL 34135 United States of America
(72)**Name of Inventor :**
1)MOLL Benjamin
2)MALKIEL Edwin
3)DONG Rong

(57) Abstract :
The invention provides systems and methods for the pre-concentration of a target molecule from feed solution comprising a low concentration of the target molecule.

No. of Pages : 39 No. of Claims : 30

(12) PATENT APPLICATION PUBLICATION
(19) INDIA
(22) Date of filing of Application :17/09/2012
(21) Application No.8013/CHENP/2012 A
(43) Publication Date : 31/01/2014

(54) Title of the invention : MANUAL CHAIN BLOCK

(51) International classification :B66D 3/16
(31) Priority Document No :2010-069912
(32) Priority Date :25/03/2010
(33) Name of priority country :Japan
(86) International Application No :PCT/JP2011/057060
Filing Date :16/03/2011
(87) International Publication No : NA
(61) Patent of Addition to Application Number :NA
Filing Date :NA
(62) Divisional to Application Number :NA
Filing Date :NA

(71)**Name of Applicant :**
1)KITO CORPORATION
Address of Applicant :2000 Tsuijiarai Showa-cho Nakakoma-gun Yamanashi 4093853 Japan
(72)**Name of Inventor :**
1)ISHIKAWA Kazumitsu

(57) Abstract :
Disclosed is a manual chain block that achieves a more compact overall device and also does not lose the strength of the device itself by means of the position of a reduction gear of a speed reduction mechanism section being able to be positioned closer to the center regardless of the bearing of a load sheave. In the manual chain block, a load sheave (12) is supported rotatably by a first and second primary frame {11a, lib) by means of bearings (13a, 13b) with axle sections (12a, 12b) therebetween. A supplemental plate (30)-which forms, in the direction of thrust: a bearing hole (33) of an axle section (16br) of a first reduction gear (16b) ,- and a drawn section (31)- is, in a manner so as to supplement the aforementioned first primary frame (11a), disposed at the periphery of the bearing (13a) that supports the axle section (12a) of the load sheave (12) at the first primary frame (11a).

No. of Pages : 27 No. of Claims : 5

(12) PATENT APPLICATION PUBLICATION
(19) INDIA
(22) Date of filing of Application :04/09/2012
(21) Application No.7651/CHENP/2012 A
(43) Publication Date : 31/01/2014

(54) Title of the invention : METHODS SYSTEMS AND COMPUTER READABLE MEDIA FOR ENHANCED SERVICE DETECTION AND POLICY RULE DETERMINATION

(51) International classification :H04L 12/24
(31) Priority Document No :61/310,872
(32) Priority Date :05/03/2010
(33) Name of priority country :U.S.A.
(86) International Application No :PCT/US2011/027427
Filing Date :07/03/2011
(87) International Publication No : NA
(61) Patent of Addition to Application Number :NA
Filing Date :NA
(62) Divisional to Application Number :NA
Filing Date :NA

(71)**Name of Applicant :**
1)Tekelec Inc.
Address of Applicant :5200 Paramount Parkway Morrisville NC 27560 USA.
(72)**Name of Inventor :**
1)RILEY Yusun Kim
2)BANIEL Uri

(57) Abstract :
Methods systems and computer readable media for enhanced service detection and policy rule determination are disclosed. According to one method a policy charging and rules function (PCRF) node requests from a deep packet inspection (DPI) node notification of detection of traffic relating to a service. The DPI node identifies at least one traffic classifier usable to detect traffic corresponding to the service uses the traffic classifier to detect traffic corresponding to the service and notifies the PCRF of the detection and of the traffic classifier. The PCRF node receives the at least one traffic classifier determines a policy rule based on the at least one traffic classifier and communicates the policy rule to a policy enforcement node.

No. of Pages : 19 No. of Claims : 27

(12) PATENT APPLICATION PUBLICATION
(19) INDIA
(22) Date of filing of Application :04/09/2012
(21) Application No.7652/CHENP/2012 A
(43) Publication Date : 31/01/2014

(54) Title of the invention : SYSTEM AND METHOD OF PROVIDING VOICE UPDATES

(51) International classification :G01C 21/36
(31) Priority Document No :12/763,061
(32) Priority Date :19/04/2010
(33) Name of priority country :U.S.A.
(86) International Application No :PCT/US2011/026263
Filing Date :25/02/2011
(87) International Publication No : NA
(61) Patent of Addition to Application Number :NA
Filing Date :NA
(62) Divisional to Application Number :NA
Filing Date :NA

(71)**Name of Applicant :**
1)QUALCOMM Incorporated
Address of Applicant :Attn: International IP Administration 5775 Morehouse Drive San Diego California 92121-1714 USA.
(72)**Name of Inventor :**
1)RYCHLIK Bohuslav

(57) Abstract :
A method of providing voice updates is disclosed and may include receiving a voice update. The method may also include scheduling a voice update window. The voice update window may be a predetermined time window in which a voice update is broadcast.

No. of Pages : 49 No. of Claims : 40

(12) PATENT APPLICATION PUBLICATION
(19) INDIA
(22) Date of filing of Application :04/09/2012
(21) Application No.7653/CHENP/2012 A
(43) Publication Date : 31/01/2014

(54) Title of the invention : METHOD AND APPARATUS TO CONTROL LOCAL INTERNET PROTOCOL ACCESS FOR DEVICES

(51) International classification :H04W 8/04
(31) Priority Document No :61/311,215
(32) Priority Date :05/03/2010
(33) Name of priority country :U.S.A.
(86) International Application No :PCT/US2011/027293
Filing Date :04/03/2011
(87) International Publication No : NA
(61) Patent of Addition to Application Number :NA
Filing Date :NA
(62) Divisional to Application Number :NA
Filing Date :NA

(71)**Name of Applicant :**
1)QUALCOMM Incorporated
Address of Applicant :Attn: International IP Administration 5775 Morehouse Drive San Diego California 92121-1714 USA.
(72)**Name of Inventor :**
1)HORN Gavin Bernard

(57) Abstract :
Methods and apparatuses are provided that facilitate controlling device local internet protocol (IP) access (LIPA) with one or more restricted groups of access points (104) in a visited network. An indicator can be provided by a home network that specifies whether a device registering with a visited network is allowed utilize LIPA in the visited networks (118). If so one or more components of the visited network (504) can provide LIPA services to the device which can include establishing IP flows for device access.

No. of Pages : 56 No. of Claims : 65

(12) PATENT APPLICATION PUBLICATION
(19) INDIA
(22) Date of filing of Application :05/09/2012
(21) Application No.7654/CHENP/2012 A
(43) Publication Date : 31/01/2014

(54) Title of the invention : VARIANTS AND COMPOSITIONS COMPRISING VARIANTS WITH HIGH STABILITY IN PRESENCE OF A CHELATING AGENT

(51) International classification :C11D 3/386
(31) Priority Document No :10153180.4
(32) Priority Date :10/02/2010
(33) Name of priority country :EUROPEAN UNION
(86) International Application No :PCT/EP2011/051982
Filing Date :10/02/2011
(87) International Publication No : NA
(61) Patent of Addition to Application Number :NA
Filing Date :NA
(62) Divisional to Application Number :NA
Filing Date :NA

(71)**Name of Applicant :**
1)NOVOZYMES A/S
Address of Applicant :Krogshoejvej 36 DK-2880 Bagsvaerd Denmark
(72)**Name of Inventor :**
1)SVENDSEN Allan
2)JOHANSEN Annette Helle
3)BJˇRNVAD Mads Eskelund
4)RASMUSSEN Frank W.
5)SKJˇT Michael
6)LARSEN Signe Eskildsen
7)ˇBRO Jens
8)KAASGAARD Svend
9)BEIER Lars

(57) Abstract :
The present invention relates to variants of an alpha-amylase having improved stability to chelating agents relative to its parent enzyme compositions comprising the variants nucleic acids encoding the variants methods of producing the variants and methods for using the variants.

No. of Pages : 253 No. of Claims : 25

(12) PATENT APPLICATION PUBLICATION
(19) INDIA
(22) Date of filing of Application :05/09/2012
(21) Application No.7655/CHENP/2012 A
(43) Publication Date : 31/01/2014

(54) Title of the invention : COMPOUNDS FOR TREATMENT OF CANCER

(51) International classification :A01N 43/78
(31) Priority Document No :61/309,360
(32) Priority Date :01/03/2010
(33) Name of priority country :U.S.A.
(86) International Application No :PCT/US2010/062418
Filing Date :29/12/2010
(87) International Publication No : NA
(61) Patent of Addition to Application Number :NA
Filing Date :NA
(62) Divisional to Application Number :NA
Filing Date :NA

(71)**Name of Applicant :**
1)GTX INC.
Address of Applicant :175 Toyota Plaza 7th Floor Memphis TN 38103 United States of America
2)UNIVERSITY OF TENNESSEE RESEARCH FOUNDATION
(72)**Name of Inventor :**
1)DALTON James T.
2)MILLER Duane D.
3)AHN Sunjoo
4)CHEN Jianjun
5)DUKE Charles
6)LI Chien-ming
7)LI Wei
8)LU Yan
9)WANG Zhao

(57) Abstract :
The present invention relates to novel compounds having anti-cancer activity methods of making these compounds and their use for treating cancer and drug-resistant tumors e.g. melanoma metastatic melanoma drug resistant melanoma prostate cancer and drug resistant prostate cancer.

No. of Pages : 287 No. of Claims : 47

(12) PATENT APPLICATION PUBLICATION
(19) INDIA
(22) Date of filing of Application :18/09/2012
(21) Application No.8028/CHENP/2012 A
(43) Publication Date : 31/01/2014

(54) Title of the invention : SPIGOT-AND-SOCKET CONDUIT JOINT WITH ANCHOR STRUCTURE AND INSTALLATION METHOD THEREOF

(51) International classification :F16L 25/10
(31) Priority Document No :NA
(32) Priority Date :NA
(33) Name of priority country :NA
(86) International Application No :PCT/CN2011/078071
Filing Date :05/08/2011
(87) International Publication No : NA
(61) Patent of Addition to Application Number :NA
Filing Date :NA
(62) Divisional to Application Number :NA
Filing Date :NA

(71)**Name of Applicant :**
1)XINXING DUCTILE IRON PIPES CO. LTD.
Address of Applicant :Research Institute Xinxing ductile iron pipes industry area Wuan city Hebei Province 056300 China.
(72)**Name of Inventor :**
1)ZHANG Tongbo
2)LI Jun
3)LIU Junfeng
4)XU Jun
5)FU Jian
6)YAN Guodong
7)LI Congfa
8)YANG Chumou
9)LI Jiushi
10)LIU Zhili
11)XI Jie

(57) Abstract :
A spigot-and-socket conduit joint with an anchor structure is disclosed. At least one group of anti-slip bosses is provided on a stopper. A fixing hole is provided in the panel of the stopper between the projections of every group of bosses. A rubber block is fixed to the stopper through the fixing hole. After the stopper is inserted between the socket and the spigot through the stopper mounting groove in an annual wall at the end of the socket the stopper is installed in position by rotating circumferentially along the outer wall of the spigot. The rubber block attached to the stopper is located at the right side of the inner incline of the annual wall at the end of the socket the stopper is pressed against the outer surface of the spigot tightly by the rubber block enabling to effectively prevent the stopper from displacing or rather dropping out

No. of Pages : 24 No. of Claims : 10

(12) PATENT APPLICATION PUBLICATION
(19) INDIA
(22) Date of filing of Application :28/12/2010
(21) Application No.3978/CHE/2010 A
(43) Publication Date : 31/01/2014

(54) Title of the invention : FOUR CYCLE INTERNAL COMBUSTION ENGINE

(51) International classification :F16D43/00
(31) Priority Document No :NA
(32) Priority Date :NA
(33) Name of priority country :NA
(86) International Application No :NA
Filing Date :NA
(87) International Publication No : NA
(61) Patent of Addition to Application Number :NA
Filing Date :NA
(62) Divisional to Application Number :NA
Filing Date :NA

(71)**Name of Applicant :**
1)TVS MOTOR COMPANY LIMITED
Address of Applicant :JAYALAKSHMI ESTATES NO.29 (OLD NO.8) HADDOWS ROAD, CHENNAI 600 006 Tamil Nadu India
(72)**Name of Inventor :**
1)KANDREGULA SRINIVASA RAO
2)KRISHNABHATTA NAGARAJA
3)PALNATI SIVA SATYANARAYANA
4)AJITH VENKATESWARA PAI
5)VIPINDAS CHONAMKANDY

(57) Abstract :
The present invention provides a four cycle internal combustion engine with a centrifugal clutch assembly having an output member and an input member. Said output member is provided with an output shaft with a drive gear fixed on it. Said engine further has a crank shaft assembly defining the clutch housing and a crank case defining a wet chamber for housing the crank shaft assembly, the centrifugal clutch and the transmission system. Said centrifugal clutch and the transmission system are housed in the crankcase left. Further a cover clutch assembly is provided to cover the crankcase left and an oil pump assembly is housed in the enclosed area of the cover clutch assembly.

No. of Pages : 15 No. of Claims : 5

(12) PATENT APPLICATION PUBLICATION
(19) INDIA
(22) Date of filing of Application :18/02/2011
(21) Application No.466/CHE/2011 A
(43) Publication Date : 31/01/2014

(54) Title of the invention : AN IMPROVED PROCESS FOR THE PREPARATION OF NAFTOPIDIL

(51) International classification :C07D
(31) Priority Document No :NA
(32) Priority Date :NA
(33) Name of priority country :NA
(86) International Application No :NA
Filing Date :NA
(87) International Publication No : NA
(61) Patent of Addition to Application Number :NA
Filing Date :NA
(62) Divisional to Application Number :NA
Filing Date :NA

(71)**Name of Applicant :**
1)MATRIX LABORATORIES LTD
Address of Applicant :1-1-151/1, IV FLOOR, SAIRAM TOWERS, ALEXANDER ROAD, SECUNDERABAD - 500 003 Andhra Pradesh India
(72)**Name of Inventor :**
1)KARUSALA, NAGESWARA RAO
2)RATHINAPANDIAN, JEBARAJ
3)BHAUSAHEB, CHAVHAN
4)CHANDUPTLA, SHIVA KUMAR
5)GHANTA, NAGARAJI

(57) Abstract :
The present invention relates to a process for the preparation of pure Naftopidii by reacting 2,3-epoxy-l-(l-naphthyloxy)-propane and l-(2-methoxy-phenyl)-piperazine or its acid addition acid salt in biphasic medium. The present invention also relates to a purification of Naftopidii. The present invention fiirther relates to a process for the preparation of intermediate of Naftopidii, 2, 3-epoxy-l-(l-naphthyloxy)-propane.

No. of Pages : 13 No. of Claims : 9

(12) PATENT APPLICATION PUBLICATION
(19) INDIA
(22) Date of filing of Application :18/09/2012
(21) Application No.8067/CHENP/2012 A
(43) Publication Date : 31/01/2014

(54) Title of the invention : METHOD AND BASE STATION SUBSYSTEM (BSS) FOR ACCELERATING ACKNOWLEDGEMENT OF RADIO LINK CONTROL (RLC) WINDOW STATE

(51) International classification :H04L 1/16
(31) Priority Document No :201010167323.1
(32) Priority Date :06/05/2010
(33) Name of priority country :China
(86) International Application No :PCT/CN2011/073337
Filing Date :26/04/2011
(87) International Publication No : NA
(61) Patent of Addition to Application Number :NA
Filing Date :NA
(62) Divisional to Application Number :NA
Filing Date :NA

(71)**Name of Applicant :**
1)ZTE CORPORATION
Address of Applicant :ZTE Plaza Keji Road South Hi-Tech Industrial Park Nanshan Shenzhen Guangdong 518057 China
China
(72)**Name of Inventor :**
1)Jinyin ZHU
2)Zhiying WANG
3)Hongtao LV

(57) Abstract :
A method and a Base Station Subsystem (BSS) for accelerating a Radio Link Control (RLC) window state acknowledgement are disclosed in the present invention. The method includes: at a signaling point in the Mobile Station (MS) reselection or handover process judging whether there is an uplink and/or a downlink Temporary Block Flow (TBF) corresponding to the MS wherein if there is an uplink TBF corresponding to the MS then for an uplink RLC sending-receiving window a BSS continuously sends M uplink acknowledgements to the MS; if there is a downlink TBF corresponding to the MS then for a downlink RLC sending-receiving window the BSS sets Relative Reserved Block Period (RRBP) indicators in N data blocks allocated in a corresponding downlink TBF.

No. of Pages : 32 No. of Claims : 11

(12) PATENT APPLICATION PUBLICATION
(19) INDIA
(22) Date of filing of Application :18/09/2012
(21) Application No.8068/CHENP/2012 A
(43) Publication Date : 31/01/2014

(54) Title of the invention : DUAL TONE MULTI-FREQUENCY SIGNAL TRANSMISSION METHOD AND DEVICE

(51) International classification :H04M 7/00
(31) Priority Document No :201010142002.6
(32) Priority Date :01/04/2010
(33) Name of priority country :China
(86) International Application No :PCT/CN2010/080120
Filing Date :22/12/2010
(87) International Publication No : NA
(61) Patent of Addition to Application Number :NA
Filing Date :NA
(62) Divisional to Application Number :NA
Filing Date :NA

(71)**Name of Applicant :**
1)ZTE CORPORATION
Address of Applicant :ZTE Plaza Keji Road South Hi-Tech Industrial Park Nanshan Shenzhen Guangdong 518057 China
(72)**Name of Inventor :**
1)Qiansheng ZHOU

(57) Abstract :
A method and apparatus for transmitting a dual tone multi-frequency (DTMF) signal are disclosed by the present invention. The scheme of the present invention includes: when receiving an input instruction for inputting a DTMF character transmitted by a network side, obtaining the DTMF character to be transmitted and caching the DTMF character in a character queue (102); when receiving a character modification command, modifying the cached character queue according to character modification indication information carried in the character modification command (104); and when determining that all DTMF characters to be transmitted are already cached, transmitting the DTMF characters in the cached character queue to the network side according to the order of the DTMF characters in the character queue (106). The technical scheme of the present invention can improve the operability of the service and the accuracy of character input, facilitate the user operation, provide convenience for the user to edit the DTMF characters to be transmitted during the process of service use and improve the experience effect of the user using interactive control service.

No. of Pages : 27 No. of Claims : 13

(12) PATENT APPLICATION PUBLICATION
(19) INDIA
(22) Date of filing of Application :21/02/2011
(21) Application No.493/CHE/2011 A
(43) Publication Date : 31/01/2014

(54) Title of the invention : AN IMPROVED PROCESS FOR THE PREPARATION OF ILOPERIDONE

(51) International classification :C07D
(31) Priority Document No :NA
(32) Priority Date :NA
(33) Name of priority country :NA
(86) International Application No :NA
Filing Date :NA
(87) International Publication No : NA
(61) Patent of Addition to Application Number :NA
Filing Date :NA
(62) Divisional to Application Number :NA
Filing Date :NA

(71)**Name of Applicant :**
1)MATRIX LABORATORIES LTD
Address of Applicant :1-1-151/1, IV FLOOR, SAIRAM, TOWERS, ALEXANDER ROAD, SECUNDERABAD INDIA-500 003. Andhra Pradesh India
(72)**Name of Inventor :**
1)VELLANKI, SIVA RAMA PRASAD
2)ARABINDA, SAHU
3)PHADHURI, NAVEEN KUMAR
4)CHAVVA, BALA RAJSHEKAR REDDY

(57) Abstract :
The present relates to an improved process for the preparation of Iloperidone or its pharmaceutically acceptable salt by reacting l-[4-(3-chloropropoxy)-3-methoxyphenyl] ethanone of formula III with 6-fluoro-3-(4-piperidinyl)-l,2-benzisoxazole of formula II or its salt in presence of organic base in a solvent.

No. of Pages : 20 No. of Claims : 9

(12) PATENT APPLICATION PUBLICATION
(19) INDIA
(22) Date of filing of Application :18/09/2012
(21) Application No.8071/CHENP/2012 A
(43) Publication Date : 31/01/2014

(54) Title of the invention : MECHANICAL LAYER AND METHODS OF SHAPING THE SAME

(51) International classification :B81B3/00
(31) Priority Document No :12/731,583
(32) Priority Date :25/03/2010
(33) Name of priority country :U.S.A.
(86) International Application No :PCT/US2011/028549
Filing Date :15/03/2011
(87) International Publication No : NA
(61) Patent of Addition to Application Number :NA
Filing Date :NA
(62) Divisional to Application Number :NA
Filing Date :NA

(71)**Name of Applicant :**
1)QUALCOMM MEMS Technologies Inc.
Address of Applicant :5775 Morehouse Drive San Diego CA 92121 USA.
(72)**Name of Inventor :**
1)TAO Yi
2)ZHONG Fan
3)SASAGAWA Teruo

(57) Abstract :
Mechanical layers and methods of shaping mechanical layers are disclosed. In one embodiment a method includes depositing a support layer (85) a sacrificial layer (84) and a mechanical layer (34) over a substrate (20) and forming a support post (60) from the support layer. A kink (90) is formed adjacent to the support post in the mechanical layer. The kink comprises a rising edge (91) and a falling edge (92) and the kink is configured to control the shaping and curvature of the mechanical layer upon removal of the sacrificial layer.

No. of Pages : 58 No. of Claims : 36

(12) PATENT APPLICATION PUBLICATION
(19) INDIA
(22) Date of filing of Application :18/09/2012
(21) Application No.8072/CHENP/2012 A
(43) Publication Date : 31/01/2014

(54) Title of the invention : LOAD CONTROL IN UPLINK INTERFERENCE CANCELLATION SYSTEMS WITH SOFT DECISION

(51) International classification :H04W 52/34
(31) Priority Document No :61/324,700
(32) Priority Date :15/04/2010
(33) Name of priority country :U.S.A.
(86) International Application No :PCT/US2011/032772
Filing Date :15/04/2011
(87) International Publication No : NA
(61) Patent of Addition to Application Number :NA
Filing Date :NA
(62) Divisional to Application Number :NA
Filing Date :NA

(71)**Name of Applicant :**
1)QUALCOMM Incorporated
Address of Applicant :Attn: International IP Administration 5775 Morehouse Drive San Diego California 92121-1714 USA
(72)**Name of Inventor :**
1)SAMBHWANI Sharad Deepak
2)ZENG Wei

(57) Abstract :
A method for load control in uplink interference cancellation systems with soft decision is disclosed. It is determined whether interference is to be cancelled from a received signal based on a packet size of the received signal. If the signal is to be cancelled a maximal correlation factor between an interfering portion and a useful portion of the received signal is determined based on a transport block size of the received signal. If the signal is to be cancelled a reduced target load for a base station is also determined based on the maximal correlation factor. If the signal is to be cancelled uplink transmit power for one or more wireless communication devices is adjusted based on the reduced target load.

No. of Pages : 40 No. of Claims : 15

(12) PATENT APPLICATION PUBLICATION
(19) INDIA
(22) Date of filing of Application :18/09/2012
(21) Application No.8073/CHENP/2012 A
(43) Publication Date : 31/01/2014

(54) Title of the invention : METHOD AND SYSTEM FOR ALLOCATING NETWORK TEMPORARY IDENTITIES

(51) International classification :H04W 8/02
(31) Priority Document No :201010155157.3
(32) Priority Date :13/04/2010
(33) Name of priority country :China
(86) International Application No :PCT/CN2011/072485
Filing Date :07/04/2011
(87) International Publication No : NA
(61) Patent of Addition to Application Number :NA
Filing Date :NA
(62) Divisional to Application Number :NA
Filing Date :NA

(71)**Name of Applicant :**
1)Huawei Technologies Co. Ltd.
Address of Applicant :Huawei Administration Building Bantian Longgang District Shenzhen Guangdong 518129 P.R. China. China
(72)**Name of Inventor :**
1)XU Min
2)CHEN Dong
3)ZHOU Zheng
4)XU Bin

(57) Abstract :
The present invention discloses a method and system for allocating Network Temporary Identities. The method comprises: obtaining capability information of a Home NodeB; allocating information for performing identity allocation to the Home NodeB according to the capability information; sending the allocated information for performing identity allocation to the Home NodeB so that the Home NodeB implements network temporary identity allocation according to the information for performing identity allocation; wherein the different information for performing identity allocation corresponds to different Home NodeBs to implement the network temporary identity allocation. The technical solution disclosed by the present invention can reduce the implementation complexity of Home NodeB Gateway and the time delay.

No. of Pages : 50 No. of Claims : 33

(12) PATENT APPLICATION PUBLICATION
(19) INDIA
(22) Date of filing of Application :19/09/2012
(21) Application No.8076/CHENP/2012 A
(43) Publication Date : 31/01/2014

(54) Title of the invention : EXHAUST GAS PURIFYING DEVICE

(51) International classification :F01N3/24
(31) Priority Document No :2011-060067
(32) Priority Date :18/03/2011
(33) Name of priority country :Japan
(86) International Application No :PCT/JP2012/053792
Filing Date :17/02/2012
(87) International Publication No : NA
(61) Patent of Addition to Application Number :NA
Filing Date :NA
(62) Divisional to Application Number :NA
Filing Date :NA

(71)**Name of Applicant :**
1)KOMATSU LTD.
Address of Applicant :2-3-6 Akasaka Minato-ku Tokyo 107-8414 Japan
(72)**Name of Inventor :**
1)NAGASAKA Shouhei
2)SATO Hiroki
3)HARA Issei
4)OBUCHI Yosuke
5)ITOH Tatsushi
6)KASAOKA Yuuki

(57) Abstract :
An exhaust gas emission control system (1) includes: a cylindrical inflow body (22); an inflow pipe (21) into which exhaust gas flows; a cylindrical outflow body (42); and an outflow pipe (41) from which the exhaust gas flows. The inflow pipe (21) is provided with a louver member (24) that covers an opening of the inflow body (22) near an upstream side of an exhaust gas flow direction. The louver member (24) is provided with slits (2411) and inclined plates (2412) capable of changing a flow direction of the exhaust gas passing through the slits (2411) into a desired direction.

No. of Pages : 30 No. of Claims : 8

(12) PATENT APPLICATION PUBLICATION
(19) INDIA
(22) Date of filing of Application :11/09/2012
(21) Application No.7877/CHENP/2012 A
(43) Publication Date : 31/01/2014

(54) Title of the invention : TRANSMISSION RATE CONTROL METHOD MOBILE STATION AND RADIO NETWORK CONTROLLER

(51) International classification :H04L 29/08
(31) Priority Document No :2005-004588
(32) Priority Date :11/01/2005
(33) Name of priority country :Japan
(86) International Application No :PCT/JP2006/300228
Filing Date :11/01/2006
(87) International Publication No : NA
(61) Patent of Addition to Application Number :NA
Filing Date :NA
(62) Divisional to Application Number :3520/CHENP/2007
Filed on :13/08/2007

(71)**Name of Applicant :**
1)NTT DoCoMo Inc.
Address of Applicant :11-1 Nagatacho 2-chome Chiyoda-ku Tokyo 100-6510 Japan
(72)**Name of Inventor :**
1)USUDA Masafumi
2)UMESH Anil
3)NAKAMURA Takehiro

(57) Abstract :
The present invention relates to a transmission rate control method for controlling a transmission rate of user data to be transmitted via an uplink by a mobile station. A radio network controller notifies an initial maximum allowable transmission rate of the user data to the mobile station when a serving cell of the mobile station is to be changed. The mobile station increases the transmission rate of the user data up to the initial maximum allowable transmission rate notified from the radio network controller automatically while the serving cell is being changed. The mobile station increases the transmission rate of the user data up to a maximum allowable transmission rate in the changed serving cell of the mobile station automatically after the serving cell has been changed.

No. of Pages : 43 No. of Claims : 3

(12) PATENT APPLICATION PUBLICATION
(19) INDIA
(22) Date of filing of Application :19/09/2012
(21) Application No.8081/CHENP/2012 A
(43) Publication Date : 31/01/2014

(54) Title of the invention : PROCESS FOR PRODUCTION AND PURIFICATION OF RECOMBINANT LYSOSOMAL ALPHA-MANNOSIDASE

(51) International classification :A61K38/46
(31) Priority Document No :PA 201070067
(32) Priority Date :24/02/2010
(33) Name of priority country :Denmark
(86) International Application No :PCT/DK2011/050054
Filing Date :23/02/2011
(87) International Publication No : NA
(61) Patent of Addition to Application Number :NA
Filing Date :NA
(62) Divisional to Application Number :NA
Filing Date :NA

(71)**Name of Applicant :**
1)ZYMENEX A/S
Address of Applicant :Roskildevej 12 C DK-3400 Hiller¸d Denmark.
2)Jens FOGH
3)Claes ANDERSSON
4)Cecilia WEIGELT
5)Pia HYD‰N
6)Helena REUTERWALL
7)Stefan NILSSON
(72)**Name of Inventor :**
1)Jens FOGH
2)Claes ANDERSSON
3)Cecilia WEIGELT
4)Pia HYD‰N
5)Helena REUTERWALL
6)Stefan NILSSON

(57) Abstract :
The present invention relates to a process for purification of recombinant alpha-mannosidase a process for production of alpha-mannosidase a composition comprising alpha-mannosidase use of the composition as a medicament use as a medicament for the treatment of alpha-mannosidosis and a method of treating alpha-mannosidosis and/or alleviating the symptoms of alpha-mannosidosis.

No. of Pages : 70 No. of Claims : 22

(12) PATENT APPLICATION PUBLICATION
(19) INDIA
(22) Date of filing of Application :19/09/2012
(21) Application No.8082/CHENP/2012 A
(43) Publication Date : 31/01/2014

(54) Title of the invention : CONDUCTIVE POLYMER QUALITY CONTROL METHOD FOR CONDUCTIVE POLYMER AND METHOD FOR PURIFYING CONDUCTIVE POLYMER

(51) International classification :C08G73/00
(31) Priority Document No :2010-080734
(32) Priority Date :01/03/2010
(33) Name of priority country :Japan
(86) International Application No :PCT/JP2011/056930
Filing Date :23/03/2011
(87) International Publication No : NA
(61) Patent of Addition to Application Number :NA
Filing Date :NA
(62) Divisional to Application Number :NA
Filing Date :NA

(71)**Name of Applicant :**
1)MITSUBISHI RAYON CO. LTD.
Address of Applicant :1-1 Marunouchi 1-chome Chiyoda-ku Tokyo 1008253 Japan
(72)**Name of Inventor :**
1)SAKAI Takahiro
2)TAKAGI Tamae
3)YAMAZAKI Akira
4)HORIUCHI Yasushi
5)TAKAHARA Mamiko
6)NAKAYAMA Masaki
7)HOSHINO Manabu
8)IRIYAMA Hiroaki
9)MOMOSE Fumino

(57) Abstract :
The present invention provides a conductive polymer in which when being formed into a coating film foreign materials are difficult to be generated even the passage of time and a quality control method for a conductive polymer and has a repeating unit which is represented by the following general formula (1). The present invention also provides a quality control method for conductive polymers wherein conductive polymers with an area ratio (Y/X) of 0.60 or less are selected. In the formula R1 to R4 are each independently H a linear or branched alkyl group having 1 to 24 carbon atoms a linear or branched alkoxy group having 1 to 24 carbon atoms an acidic group a hydroxyl group a nitro group F Cl Br or I; and at least one of R1 to R4 is an acidic group or a salt thereof.

No. of Pages : 90 No. of Claims : 3

(12) PATENT APPLICATION PUBLICATION
(19) INDIA
(22) Date of filing of Application :20/09/2012
(21) Application No.8083/CHENP/2012 A
(43) Publication Date : 31/01/2014

(54) Title of the invention : MANAGING NETWORK COMMUNICATIONS BETWEEN NETWORK NODES AND STREAM TRANSPORT PROTOCOL

(51) International classification :H04L12/24
(31) Priority Document No :61/318,156
(32) Priority Date :26/03/2010
(33) Name of priority country :U.S.A.
(86) International Application No :PCT/US2011/029723
Filing Date :24/03/2011
(87) International Publication No : NA
(61) Patent of Addition to Application Number :NA
Filing Date :NA
(62) Divisional to Application Number :8050/CHENP/2012
Filed on :18/09/2012

(71)**Name of Applicant :**
1)SOCIAL COMMUNICATIONS COMPANY
Address of Applicant :2086 Potter Street Eugene Oregon 97405 United States of America
(72)**Name of Inventor :**
1)JOSEPH ALTMAIER
2)ROBERT BUTLER
3)DAVID VAN WIE

(57) Abstract :
A stream transport protocol supports realtime network communications between communicants operating on respective client network nodes (12 14). The stream transport protocol supports remote management of client communication sessions including provisioning of each pair of client network nodes (12 14) with a respective session definition defining a respective peer-to-peer session over a network connection between the constituent client network nodes (12 14) of the pair. The stream transport protocol has relatively low computational resource requirements so that realtime communications performance can be achieved using a wide range of computing devices and network connections that currently are available.

No. of Pages : 85 No. of Claims : 22

(12) PATENT APPLICATION PUBLICATION
(19) INDIA
(22) Date of filing of Application :20/09/2012
(21) Application No.8085/CHENP/2012 A
(43) Publication Date : 31/01/2014

(54) Title of the invention : IRONMAKING PROCESS AND IRONMAKING SYSTEM

(51) International classification :C21B15/00
(31) Priority Document No :2010-046055
(32) Priority Date :03/03/2010
(33) Name of priority country :Japan
(86) International Application No :PCT/JP2011/054713
Filing Date :02/03/2011
(87) International Publication No : NA
(61) Patent of Addition to Application Number :NA
Filing Date :NA
(62) Divisional to Application Number :NA
Filing Date :NA

(71)**Name of Applicant :**
1)NATIONAL UNIVERSITY CORPORATION HOKKAIDO UNIVERSITY
Address of Applicant :Kita 8-jyo Nishi 5-chome Kita-ku Sapporo-shi Hokkaido 060-0808 JAPAN
2)JFE Steel Corporation
(72)**Name of Inventor :**
1)AKIYAMA Tomohiro
2)OKINAKA Noriyuki
3)HOSOKAI Sou
4)MATSUI Kousuke

(57) Abstract :
An ironmaking process and an ironmaking system are provided in which ammonia which is transported by an established method is used as a reducing agent to thereby lower the temperature for the reduction reaction and make it possible to reduce the amount of the reducing agent to be used fuel consumption and carbon dioxide emission. [Solution] A feed material for ironmaking and ammonia are supplied to a reactor (3) and subjected to reduction reaction thereby producing iron. The ammonia may be supplied to the reactor (3) after being preheated to at least the temperature at which the feed material for ironmaking is reduced. Oxygen or air may be supplied to the reactor (3).

No. of Pages : 38 No. of Claims : 10

(12) PATENT APPLICATION PUBLICATION
(19) INDIA
(22) Date of filing of Application :27/09/2012
(21) Application No.4023/CHE/2012 A
(43) Publication Date : 31/01/2014

(54) Title of the invention : A CHITINASE FROM BREVIBACILLUS LATEROSPORUS, ITS PRODUCTION AND USE THEREOF

(51) International classification :A01N63/00
(31) Priority Document No :61545120
(32) Priority Date :08/10/2011
(33) Name of priority country :U.S.A.
(86) International Application No :NA
Filing Date :NA
(87) International Publication No : NA
(61) Patent of Addition to Application Number :NA
Filing Date :NA
(62) Divisional to Application Number :NA
Filing Date :NA

(71)**Name of Applicant :**
1)DR. GANGACARAMU LAKSHMI PRASANNA
Address of Applicant :J-45, ROBERT LINES, TRIMULGHERRY, SECUNDERABAD, A.P. 500 015 Andhra Pradesh India
(72)**Name of Inventor :**
1)DR. GANGACARAMU LAKSHMI PRASANNA

(57) Abstract :
The present invention relates to a newly discovered, novel strain of Brevibacillus laterosporus LAK 1210 as dual producer of insecticidal proteins and inducible chitinolytic enzymes with a potential utility in agriculture, forest pest management and mosquito control programs. The multiple effects of this novel strain of Brevibacillus laterosporus LAK 1210 , as a chitinase producer with insecticidal activity and the ability to degrade marine wastes finds many biotechnological applications in the areas of agriculture, forestry, medicine and environment. Futhermore, the object of the invention is directed to a new chitinase with novel characteristics from a newer source of microorganism and its novel applications in biomass utilization and waste management. Methods and compositions of the invention utilize the vegetative cells, their derivatives (spores, cellular extracts, enzyme fractions) and the polypeptides for control of insects and phytopathogenic fungi. Another object of this invention is to expand the synergistic effect of chitinases on insecticidal activity for an improved pesticidal activity where a wider range of pests are impacted.

No. of Pages : 30 No. of Claims : 16

(12) PATENT APPLICATION PUBLICATION
(19) INDIA
(22) Date of filing of Application :27/09/2012
(21) Application No.4027/CHE/2012 A
(43) Publication Date : 31/01/2014

(54) Title of the invention : DISENGAGEMENT DEVICE OF MOTORISATION OF THE RESET DEVICE OF THE CONTACT CLOSING DEVICE IN AN ELECTRIC PROTECTION APPARATUS AND APPARATUS COMPRISING SAME

(51) International classification :H01H
(31) Priority Document No :11 02977
(32) Priority Date :30/09/2011
(33) Name of priority country :France
(86) International Application No :NA
Filing Date :NA
(87) International Publication No : NA
(61) Patent of Addition to Application Number :NA
Filing Date :NA
(62) Divisional to Application Number :NA
Filing Date :NA

(71)**Name of Applicant :**
1)SCHNEIDER ELECTRIC INDUSTRIES SAS
Address of Applicant :35, RUE JOSEPH MONIER F-92500 RUEIL MALMAISON France
(72)**Name of Inventor :**
1)TAMISIER, DIDIER

(57) Abstract :
The present invention relates to a disengagement device of the motorisation device M of the reset device R of the contact closing device in an electric protection apparatus, said apparatus comprising at least one stationary contact and at least one movable contact supported by a pole operating shaft (2), said shaft (2) being able to take a first position in which the contacts are closed and a second position in which the contacts are open, and a reset device comprising an energy storage device (1) designed to participate in closing of the contacts, said disengagement device comprising disengagement means designed to disunite the motorisation device M and the reset device R at the end of the reset operation, this device being characterized in that it comprises means for maintaining the above-mentioned disengagement substantially throughout the whole of the closing operation of the operating shaft (2).

No. of Pages : 23 No. of Claims : 12

(12) PATENT APPLICATION PUBLICATION
(19) INDIA
(22) Date of filing of Application :27/09/2012
(21) Application No.4028/CHE/2012 A
(43) Publication Date : 31/01/2014

(54) Title of the invention : AN AUXILIARY CONTACT DEVICE FOR MV SWITCHING APPARATUSES

(51) International classification :H01H
(31) Priority Document No :11183877.7
(32) Priority Date :04/10/2011
(33) Name of priority country :EPO
(86) International Application No :NA
Filing Date :NA
(87) International Publication No : NA
(61) Patent of Addition to Application Number :NA
Filing Date :NA
(62) Divisional to Application Number :NA
Filing Date :NA

(71)**Name of Applicant :**
1)ABB TECHNOLOGY AG
Address of Applicant :AFFOLTERNSTRASSE 44, CH-8050 ZURICH Switzerland
(72)**Name of Inventor :**
1)CATTANEO, DAVIDE
2)INVERNIZZI,PIERLUIGI
3)BONFANTI, ALESSANDRO
4)MAGONI, STEFANO

(57) Abstract :
An auxiliary contact device for medium voltage switching apparatuses comprising a fixed contact sub-assembly comprising at least a pair of fixed contacts, a movable contact subassembly comprising at least a movable contact that is rotary couplable with said fixed contacts, an operating shaft comprising a first shaft portion, operatively coupled with a linear actuator, and a second shaft portion, operatively coupled with said movable contact subassembly. The first and second shaft portions of said shaft are coupled each other and move linearly together between a first position and a second position. The second shaft portion of said shaft is free to rotate with respect to said first shaft portion, between a third and fourth position.

No. of Pages : 27 No. of Claims : 13

(12) PATENT APPLICATION PUBLICATION
(19) INDIA
(22) Date of filing of Application :20/09/2012
(21) Application No.8121/CHENP/2012 A
(43) Publication Date : 31/01/2014

(54) Title of the invention : NOVEL ENVIRONMENTAL ENGINEERED WOOD LAMINATE FLOORING MANUFACTURING METHOD

(51) International classification :E04F 15/04
(31) Priority Document No :201010215063.0
(32) Priority Date :01/07/2010
(33) Name of priority country :China
(86) International Application No :PCT/CN2011/076744
Filing Date :01/07/2011
(87) International Publication No : NA
(61) Patent of Addition to Application Number :NA
Filing Date :NA
(62) Divisional to Application Number :NA
Filing Date :NA

(71)**Name of Applicant :**
1)ZHEJIANG LINGGE WOOD CO. LTD
Address of Applicant :The West of Nianfeng Road Nanxun Town Huzhou Zhejiang 313009 China China
(72)**Name of Inventor :**
1)LIU Binbin

(57) Abstract :
An environmental engineered wood laminate flooring manufacturing method comprising the following: using a wood veneer layer (2) as the top layer, adhering on the wood veneer layer (2) a wear layer (1), and pressing on the bottom surface of the wood veneer layer (2) a layer of glue-soaked paper (3), so as to accentuate the clear and natural wood lines on the wood veneer layer (2); using a high density board (4) as a base board layer, and adhering on the bottom surface thereof a balancing layer (5); stacking the wood veneer layer (1), the wear layer (2), the glue-soaked paper (3), the base board layer (4), and the balancing layer (5); heat pressing with a heat press at a temperature between 170 and 190°C, at a pressure between 16 and 22 Mpa, and for 20 to 50s. Corresponding tongues and grooves are provided on the four lateral faces of the manufactured flooring.

No. of Pages : 9 No. of Claims : 4

(12) PATENT APPLICATION PUBLICATION
(19) INDIA
(22) Date of filing of Application :13/09/2012
(21) Application No.7915/CHENP/2012 A
(43) Publication Date : 31/01/2014

(54) Title of the invention : ADAPTIVE PLACEMENT OF AUXILIARY MEDIA IN RECOMMENDER SYSTEMS

(51) International classification :H04N 7/173
(31) Priority Document No :10153751.2
(32) Priority Date :16/02/2010
(33) Name of priority country :EPO
(86) International Application No :PCT/EP2011/050853
Filing Date :21/01/2011
(87) International Publication No : NA
(61) Patent of Addition to Application Number :NA
Filing Date :NA
(62) Divisional to Application Number :NA
Filing Date :NA

(71)**Name of Applicant :**
1)AXEL SPRINGER DIGITAL TV GUIDE GMBH
Address of Applicant :Schiffbauerdamm 22 10117 Berlin Germany
(72)**Name of Inventor :**
1)ZIER Thomas
2)ROSENGART Frank

(57) Abstract :
The present invention relates to an apparatus method and computer program product for controlling a recommender system wherein placement of auxiliary media in relation to at least one content item presented to a user is controlled. A first scheduler (111) is provided for scheduling the at least one content item based on a user profile obtained from a recommender system. Additionally a second scheduler (118) is provided for scheduling placement of the auxiliary media in response to the first scheduler (111) wherein the second scheduler (118) is adapted to receive information about a scheduled content from the first scheduler (111) and to decide which auxiliary media to place into a presentation space based on the received information.

No. of Pages : 32 No. of Claims : 16

(12) PATENT APPLICATION PUBLICATION
(19) INDIA
(22) Date of filing of Application :13/09/2012
(21) Application No.7916/CHENP/2012 A
(43) Publication Date : 31/01/2014

(54) Title of the invention : BLUETONGUE VIRUS RECOMBINANT VACCINES AND USES THEREOF

(51) International classification :C07K 14/14
(31) Priority Document No :61/313,164
(32) Priority Date :12/03/2010
(33) Name of priority country :U.S.A.
(86) International Application No :PCT/US2011/028131
Filing Date :11/03/2011
(87) International Publication No : NA
(61) Patent of Addition to Application Number :NA
Filing Date :NA
(62) Divisional to Application Number :NA
Filing Date :NA

(71)**Name of Applicant :**
1)MERIAL LIMITED
Address of Applicant :3239 Satelitte Blvd. Duluth GA 30096 (US) U.S.A.
2)BIOLEX THERAPEUTICS
(72)**Name of Inventor :**
1)AUDONNET Jean-Christophe
2)GUO Xuan
3)COX Kevin

(57) Abstract :
The present invention encompasses BTV vaccines or compositions. The vaccine or composition may be a vaccine or composition containing BTV antigens. The invention also encompasses recombinant vectors encoding and expressing BTV antigens epitopes or immunogens which can be used to protect animals such as ovines bovines or caprines against BTV.

No. of Pages : 115 No. of Claims : 25

(12) PATENT APPLICATION PUBLICATION
(19) INDIA
(22) Date of filing of Application :14/09/2012
(21) Application No.7917/CHENP/2012 A
(43) Publication Date : 31/01/2014

(54) Title of the invention : LINK DETECTING METHOD APPARATUS AND SYSTEM

(51) International classification :H04L 12/24
(31) Priority Document No :201010117164.4
(32) Priority Date :20/02/2010
(33) Name of priority country :China
(86) International Application No :PCT/CN2010/078877
Filing Date :18/11/2010
(87) International Publication No : NA
(61) Patent of Addition to Application Number :NA
Filing Date :NA
(62) Divisional to Application Number :NA
Filing Date :NA

(71)**Name of Applicant :**
1)ZTE CORPORATION
Address of Applicant :ZTE Plaza Keji Road South Hi-Tech Industrial Park Nanshan Shenzhen Guangdong 518057 China
(72)**Name of Inventor :**
1)Aimin LI

(57) Abstract :
A link detecting method apparatus and system are disclosed in the present invention and are related to the field of IP network communications. The method comprises: updating link path information if changes occur in a link path; and sending and receiving the bidirectional forwarding detection messages according to the updated link path information. The present invention solves the problem that the connection state of the link between the nodes cannot be detected accuratel

No. of Pages : 20 No. of Claims : 10

(12) PATENT APPLICATION PUBLICATION
(19) INDIA
(22) Date of filing of Application :14/09/2012
(21) Application No.7918/CHENP/2012 A
(43) Publication Date : 31/01/2014

(54) Title of the invention : AMPLIFIER APPARATUS RADIO TRANSMITTING APPARATUS INCLUDING SAME AND METHOD OF ADJUSTING GAIN OF AMPLIFIER APPPARATUS

(51) International classification :H03F 1/32
(31) Priority Document No :2010-031630
(32) Priority Date :16/02/2010
(33) Name of priority country :Japan
(86) International Application No :PCT/JP2011/050943
Filing Date :20/01/2011
(87) International Publication No : NA
(61) Patent of Addition to Application Number :NA
Filing Date :NA
(62) Divisional to Application Number :NA
Filing Date :NA

(71)**Name of Applicant :**
1)SUMITOMO ELECTRIC INDUSTRIES LTD.
Address of Applicant :5-33 Kitahama 4-chome Chuo-ku Osaka-shi Osaka 5410041 Japan
(72)**Name of Inventor :**
1)YAMAMOTO Takashi

(57) Abstract :
An object of the present invention is to provide an amplifier apparatus 1 in which even if a gain of a returning analog circuit 4 fluctuates, the fluctuation in the gain can be corrected, making it possible to accurately perform a distortion compensation process by a DPD 20. The present invention relates to an amplifier apparatus 1 including an amplifier 11 and a digital pre-distorter (DPD) 20 that performs a distortion compensation process of the amplifier 11. The amplifier apparatus 1 includes a transmitting analog circuit 3 including the amplifier 11; a returning analog circuit 4 including an attenuator 15; a power measurement circuit 16 that measures output power of the amplifier 11; and an amount-of-change calculating unit 27 that calculates an amount of change ΔGrx in a gain Grx of the returning analog circuit 4, based on a measured value of the power measurement circuit

No. of Pages : 45 No. of Claims : 11

(12) PATENT APPLICATION PUBLICATION
(19) INDIA
(22) Date of filing of Application :20/09/2012
(21) Application No.8129/CHENP/2012 A
(43) Publication Date : 31/01/2014

(54) Title of the invention : FIXED STRUCTURE OF AN ECCENTRIC ROD AND VIBRATION GENERATOR

(51) International classification :A61C 17/22
(31) Priority Document No :2010-043068
(32) Priority Date :26/02/2010
(33) Name of priority country :Japan
(86) International Application No :PCT/JP2011/053274
Filing Date :16/02/2011
(87) International Publication No : NA
(61) Patent of Addition to Application Number :NA
Filing Date :NA
(62) Divisional to Application Number :NA
Filing Date :NA

(71)**Name of Applicant :**
1)OMRON HEALTHCARE Co. LTD.
Address of Applicant :53 Kunotsubo Terado-cho Muko-shi Kyoto 617-0002 Japan
(72)**Name of Inventor :**
1)Yasunori HATA

(57) Abstract :
An electric toothbrush as a vibration generator is provided with a case (10), a motor (20), an eccentric rod (30A), a stem (40), and an oral hygiene member. The eccentric rod (30A) has an eccentric weight portion (33) and a rod portion (34) connected to a drive shaft (21) of the motor (20). The angle 9 between the first central axis (33t) of the eccentric weight portion (33) and an extension line (34s), defined by extending the second central axis (34t) of the rod portion (34) towards the eccentric weight portion (33), is greater than 0 degrees and equal to or less than approximately 10 degrees in a state in which one end (31) of the eccentric rod (30 A) is not inserted into a shaft receiving portion (44). In this way, a fixed structure of an eccentric rod and a vibration generator are obtained which reduce noise generated by vibration when run at high as well as at low rotation speeds.

No. of Pages : 27 No. of Claims : 6

(12) PATENT APPLICATION PUBLICATION
(19) INDIA
(22) Date of filing of Application :20/09/2012
(21) Application No.8123/CHENP/2012 A
(43) Publication Date : 31/01/2014

(54) Title of the invention : METHOD FOR TRANSMITTING CAPABILITY OF USER EQUIPMENT METHOD AND SYSTEM FOR RELOCATION AND INTER-SYSTEM HANDOVER

(51) International classification :H04W72/04
(31) Priority Document No :201010155414.3
(32) Priority Date :30/03/2010
(33) Name of priority country :China
(86) International Application No :PCT/CN2010/079711
Filing Date :13/12/2010
(87) International Publication No : NA
(61) Patent of Addition to Application Number :NA
Filing Date :NA
(62) Divisional to Application Number :NA
Filing Date :NA

(71)**Name of Applicant :**
1)ZTE CORPORATION
Address of Applicant :ZTE Plaza Keji Road South Hi-Tech Industrial Park Nanshan Shenzhen Guangdong 518057 China.
(72)**Name of Inventor :**
1)Bo YU
2)Meifang HE
3)Lirong SHI

(57) Abstract :
A method and system for transmitting a capability of a terminal supporting multi-carrier multiple-input multiple-output, a method and system for a relocation and an inter-system handover are disclosed in the present invention. The method for transmitting the capability of the terminal supporting multi-carrier MIMO includes: when a User Equipment (UE) supports multi-carrier, carrying the capability of the UE supporting the number of downlink carriers configured as Multiple-Input Multiple-Output (MIMO) in interaction message interacted with a Radio Network Controller (RNC) to send to the RNC; and, the RNC acquiring the capability of the UE supporting the number of downlink carriers configured as MIMO according to the interaction message, and allocating resources for the UE according to the acquired capability of the UE supporting the number of downlink carriers configured as MIMO. With the present invention, a network side is enabled to acquire the capability of the UE supporting the number of downlink carriers configured as MIMO and allocate the resources reasonably according to the capability.

No. of Pages : 47 No. of Claims : 20

(12) PATENT APPLICATION PUBLICATION
(19) INDIA
(22) Date of filing of Application :20/09/2012
(21) Application No.8124/CHENP/2012 A
(43) Publication Date : 31/01/2014

(54) Title of the invention : SINTERED CUBIC BORON NITRIDE COMPACT AND SINTERED CUBIC BORON NITRIDE COMPACT TOOL

(51) International classification :B23B 27/14
(31) Priority Document No :2010-240646
(32) Priority Date :27/10/2010
(33) Name of priority country :Japan
(86) International Application No :PCT/JP2011/074628
Filing Date :26/10/2011
(87) International Publication No : NA
(61) Patent of Addition to Application Number :NA
Filing Date :NA
(62) Divisional to Application Number :NA
Filing Date :NA

(71)**Name of Applicant :**
1)SUMITOMO ELECTRIC HARDMETAL CORP.
Address of Applicant :1-1 Koyakita 1-chome Itami-shi Hyogo 664-0016 JAPAN
(72)**Name of Inventor :**
1)OKAMURA Katsumi
2)ABE Machiko
3)KUKINO Satoru

(57) Abstract :
It is an object of the present invention to provide a sintered cBN compact having excellent wear resistance and fracture resistance even in machining centrifugally cast iron having a property of being difficult to machine, and to provide a sintered cBN compact tool. A sintered cBN compact of the present invention contains 20% by volume or more and 65% by volume or less of cBN and, as a binder, 34% by volume or more and less than 80% by volume of AI2O3, at least one selected from the group consisting of nitrides, carbides, carbonitrides, borides, and boronitrides of Zr and solid solutions thereof (hereinafter, referred to as X), and ZrO2, the total amount of X and ZrO2 being 1.0% by volume or more and 6.0% by volume or less, the volume ratio of ZrO2 to AI2O3, ZrO2/AI2O3, being 0.010 or more and less than 0.100, in which the ratio Itetragonal zrO2(101)/IαAI2O3(110) is 0.1 or more and 3 or less, where Itetragonai zrO2(l01) is the intensity of the (101) plane of tetragonal ZrO2 and IαAI2O3(110) is the intensity of the (110) plane of αAI2O3 among X-ray diffraction peaks of the sintered cBN compact.

No. of Pages : 15 No. of Claims : 4

(12) PATENT APPLICATION PUBLICATION
(19) INDIA
(22) Date of filing of Application :20/09/2012
(21) Application No.8125/CHENP/2012 A
(43) Publication Date : 31/01/2014

(54) Title of the invention : METHOD FOR PRODUCING NEGATIVE ELECTRODE PRECURSOR MATERIAL FOR BATTERY NEGATIVE ELECTRODE PRECURSOR MATERIAL FOR BATTERY AND BATTERY

(51) International classification :H01M 4/04
(31) Priority Document No :2010-049394
(32) Priority Date :05/03/2010
(33) Name of priority country :Japan
(86) International Application No :PCT/JP2011/055107
Filing Date :04/03/2011
(87) International Publication No : NA
(61) Patent of Addition to Application Number :NA
Filing Date :NA
(62) Divisional to Application Number :NA
Filing Date :NA

(71)**Name of Applicant :**
1)SUMITOMO ELECTRIC INDUSTRIES LTD.
Address of Applicant :5-33 Kitahama 4-chome Chuo-ku Osaka-shi Osaka 5410041 Japan
(72)**Name of Inventor :**
1)SAKAI Shoichiro
2)FUKUNAGA Atsushi
3)NITTA Koji
4)MAJIMA Masatoshi
5)INAZAWA Shinji

(57) Abstract :
To provide a method for producing a negative electrode precursor material for a battery capable of preparing a negative electrode which has good adhesiveness between an Al current collector and a Sn-plated film therein and therefore can be reduced in thickness has good current collecting performance and suppresses deformation and generation of dendrites during operation; the negative electrode precursor material for a battery; and a battery equipped with the negative electrode precursor material for a battery as a negative electrode.

No. of Pages : 56 No. of Claims : 8

(12) PATENT APPLICATION PUBLICATION
(19) INDIA
(22) Date of filing of Application :20/09/2012
(21) Application No.8126/CHENP/2012 A
(43) Publication Date : 31/01/2014

(54) Title of the invention : AMPLIFIER APPARATUS SIGNAL PROCESSING APPARATUS RADIO COMMUNICATION APPARATUS CONNECTOR MOUNTING STRUCTURE AND COAXIAL CONNECTOR

(51) International classification :H03F 1/06
(31) Priority Document No :2010-038276
(32) Priority Date :24/02/2010
(33) Name of priority country :Japan
(86) International Application No :PCT/JP2011/053814
Filing Date :22/02/2011
(87) International Publication No : NA
(61) Patent of Addition to Application Number :NA
Filing Date :NA
(62) Divisional to Application Number :NA
Filing Date :NA

(71)**Name of Applicant :**
1)SUMITOMO ELECTRIC INDUSTRIES LTD.
Address of Applicant :5-33 Kitahama 4-chome Chuo-ku Osaka-shi Osaka 5410041 Japan
(72)**Name of Inventor :**
1)KUROKAWA Yorinao
2)SHIMURA Tatsuhiro

(57) Abstract :
There is provided an amplifier apparatus and a signal processing apparatus that reduce a delay or distortion of a power supply voltage used for drain modulation. An amplifier apparatus 10 is an amplifier apparatus that performs drain modulation, and includes a printed circuit board 400 having a first principal surface 401a and a second principal surface 401b that face each other; an amplifier circuit 100 disposed on the first principal surface 400a; and a modulation power supply circuit 200 that supplies a variable power supply voltage for performing drain modulation, to the amplifier circuit 100. The modulation power supply circuit 200 has an output portion 250 that outputs the power supply voltage. The amplifier circuit 100 has an input portion 150 to which the power supply voltage is supplied. The output portion 250 is located on the side of the second principal surface 400b of the printed circuit board 400 and is connected to the input portion 150 through a conductor penetrating through the printed circuit board 400.

No. of Pages : 134 No. of Claims : 22

(12) PATENT APPLICATION PUBLICATION
(19) INDIA
(22) Date of filing of Application :12/09/2012
(21) Application No.7883/CHENP/2012 A
(43) Publication Date : 31/01/2014

(54) Title of the invention : METHOD AND APPARATUS FOR PROVIDING AUTHENTICATION SESSION SHARING

(51) International classification :H04L 29/06
(31) Priority Document No :12/707,941
(32) Priority Date :18/02/2010
(33) Name of priority country :U.S.A.
(86) International Application No :PCT/FI2011/050092
Filing Date :03/02/2011
(87) International Publication No : NA
(61) Patent of Addition to Application Number :NA
Filing Date :NA
(62) Divisional to Application Number :NA
Filing Date :NA

(71)**Name of Applicant :**
1)NOKIA CORPORATION
Address of Applicant :Keilalahdentie 4 FIN-02150 Espoo Finland
(72)**Name of Inventor :**
1)Jari Otranen
2)Anssi Karhinen

(57) Abstract :
An approach is provided for providing separation of authentication protocols and/or authentication contexts for client-server and server-server communication in network communication. A proxy server receives a request to initiate a service session. The request includes a first authentication context. The proxy server request verification of the first authentication context from an authentication server and validates the first authentication context based, at least in part, on the verification. The proxy server implements a second authentication context based, at least in part, on the verification of the first authentication context to initiate the service session.

No. of Pages : 41 No. of Claims : 24

(12) PATENT APPLICATION PUBLICATION
(19) INDIA
(22) Date of filing of Application :18/09/2012
(21) Application No.8070/CHENP/2012 A
(43) Publication Date : 31/01/2014

(54) Title of the invention : METHODS SYSTEMS AND COMPUTER READABLE MEDIA FOR COMMUNICATING POLICY INFORMATION BETWEEN A POLICY AND CHARGING RULES FUNCTION AND A SERVICE NODE

(51) International classification :H04W 8/18
(31) Priority Document No :61/313,953
(32) Priority Date :15/03/2010
(33) Name of priority country :U.S.A.
(86) International Application No :PCT/US2011/028520
Filing Date :15/03/2011
(87) International Publication No : NA
(61) Patent of Addition to Application Number :NA
Filing Date :NA
(62) Divisional to Application Number :NA
Filing Date :NA

(71)**Name of Applicant :**
1)Tekelec Inc.
Address of Applicant :5200 Paramount Parkway Morrisville NC 27560 USA
(72)**Name of Inventor :**
1)DELSESTO Mark
2)MERCURIO Michael
3)ABOU-ASSALI Tarek
4)BANIEL Uri

(57) Abstract :
According to one aspect the subject matter described herein includes a method for communicating policy information. The method includes steps occurring at a policy charging and rules function (PCRF) node. The method also includes receiving from a service node a message requesting a policy rule wherein the message includes an Internet protocol (IP) address associated with a subscriber. The method further includes determining a network access identifier (NAI) for the subscriber based on the IP address. The method further includes selecting a policy rule for the subscriber based on the NAI. The method further includes communicating the policy rule to the service node.

No. of Pages : 65 No. of Claims : 20

(12) PATENT APPLICATION PUBLICATION
(19) INDIA
(22) Date of filing of Application :18/09/2012
(21) Application No.8050/CHENP/2012 A
(43) Publication Date : 31/01/2014

(54) Title of the invention : MANAGING NETWORK COMMUNICATIONS BETWEEN NETWORK NODES AND STREAM TRANSPORT PROTOCOL

(51) International classification :H04L12/24
(31) Priority Document No :61/318,156
(32) Priority Date :26/03/2010
(33) Name of priority country :U.S.A.
(86) International Application No :PCT/US2011/029723
Filing Date :24/03/2011
(87) International Publication No : NA
(61) Patent of Addition to Application Number :NA
Filing Date :NA
(62) Divisional to Application Number :NA
Filing Date :NA

(71)**Name of Applicant :**
1)SOCIAL COMMUNICATIONS COMPANY
Address of Applicant :2086 Potter Street Eugene Oregon 97405 United States of America
(72)**Name of Inventor :**
1)JOSEPH ALTMAIER
2)ROBERT BUTLER
3)DAVID VAN WIE

(57) Abstract :
A stream transport protocol supports realtime network communications between communicants operating on respective client network nodes (12 14). The stream transport protocol supports remote management of client communication sessions including provisioning of each pair of client network nodes (12 14) with a respective session definition defining a respective peer-to-peer session over a network connection between the constituent client network nodes (12 14) of the pair. The stream transport protocol has relatively low computational resource requirements so that realtime communications performance can be achieved using a wide range of computing devices and network connections that currently are available.

No. of Pages : 99 No. of Claims : 71

(12) PATENT APPLICATION PUBLICATION
(19) INDIA
(22) Date of filing of Application :18/09/2012
(21) Application No.8051/CHENP/2012 A
(43) Publication Date : 31/01/2014

(54) Title of the invention : AN OPERATION PLATFORM

(51) International classification :F41H7/00
(31) Priority Document No :61/323,614
(32) Priority Date :13/04/2010
(33) Name of priority country :U.S.A.
(86) International Application No :PCT/IL2011/000294
Filing Date :07/04/2011
(87) International Publication No : NA
(61) Patent of Addition to Application Number :NA
Filing Date :NA
(62) Divisional to Application Number :NA
Filing Date :NA

(71)**Name of Applicant :**
1)AGRITECHNIQUE ENGINEERING LTD.
Address of Applicant :P.O. Box 65205 61652 Tel Aviv Israel Israel
(72)**Name of Inventor :**
1)AVNER OPPERMAN

(57) Abstract :
An operation platform comprising: a platform base; a movement mechanism connectable to said platform base and when so connected configured for displacement of the platform base; at least one operation tool zone on said platform base configured for accommodating thereat at least one operation tool; and at least one boom assembly having a first end fixable to said platform base and a second free end the boom assembly being controllable for displacing said second free end towards at least said one operation tool zone coupling the second free end to at least said one operation tool accommodated within the operation tool zone and maneuvering said second free end with at least said one operation tool coupled thereto

No. of Pages : 40 No. of Claims : 36

(12) PATENT APPLICATION PUBLICATION
(19) INDIA
(22) Date of filing of Application :15/09/2012
(21) Application No.7977/CHENP/2012 A
(43) Publication Date : 31/01/2014

(54) Title of the invention : METHOD FOR PROTECTING PERSONAL INFORMATION IN AUDIENCE MEASUREMENT OF DIGITAL BROADCASTING SYSTEM

(51) International classification :H04N 7/16
(31) Priority Document No :10-2010-0014849
(32) Priority Date :18/02/2010
(33) Name of priority country :Republic of Korea
(86) International Application No :PCT/KR2011/001008
Filing Date :16/02/2011
(87) International Publication No : NA
(61) Patent of Addition to Application Number :NA
Filing Date :NA
(62) Divisional to Application Number :NA
Filing Date :NA

(71)**Name of Applicant :**
1)SAMSUNG ELECTRONICS CO. LTD.
Address of Applicant :129 Samsung-ro Yeongtong-gu Suwon-si Gyeonggi-do 443-742 Republic of Korea Republic of Korea
(72)**Name of Inventor :**
1)Sung-Oh HWANG
2)Sergey Nikolayevich SELEZNEV

(57) Abstract :
A method for protecting personal information in Audience Measurement (AM) of a digital broadcasting system is provided including inserting an indicator which notifies whether a consumption pattern of a service or content provided by a service provider can be measured into a service guide to which the information of the service or content is provided by a service provider; and determining whether the AM can be executed for the service or content in accordance with the indicator when the AM function is implemented in a terminal.

No. of Pages : 19 No. of Claims : 36

(12) PATENT APPLICATION PUBLICATION
(19) INDIA
(22) Date of filing of Application :17/09/2012
(21) Application No.7978/CHENP/2012 A
(43) Publication Date : 31/01/2014

(54) Title of the invention : METHOD AND APPARATUS FOR A HYBRID APPROACH FOR RULE SETTING BY ONLINE SERVICE PROVIDERS

(51) International classification	:G06Q30/00, G06F17/30
(31) Priority Document No	:61/315,725
(32) Priority Date	:19/03/2010
(33) Name of priority country	:U.S.A.
(86) International Application No	:PCT/FI2011/050133
Filing Date	:14/02/2011
(87) International Publication No	: NA
(61) Patent of Addition to Application Number	:NA
Filing Date	:NA
(62) Divisional to Application Number	:NA
Filing Date	:NA

(71)**Name of Applicant :**
1)NOKIA CORPORATION
Address of Applicant :Keilalahdentie 4 FIN-02150 Espoo Finland
(72)**Name of Inventor :**
1)Anthony Oddo
2)Michael Bramlage
3)Maggie Nelson

(57) Abstract :
An approach is presented for providing automatic and manual rule setting rule setting by online service providers. A content programming platform receives a first input for defining one or more automatic rules for a plurality of landing spots in a content repository, the content programming platform will further receive a second input for defining at least one override rule for at least one of the landing spots, the at least one override rule superseding the automatic rule corresponding to the at least one landing spot. Based, at least in part, on the entries the landing spots are populated with respective content items.

No. of Pages : 48 No. of Claims : 53

(12) PATENT APPLICATION PUBLICATION
(19) INDIA
(22) Date of filing of Application :17/09/2012
(21) Application No.7979/CHENP/2012 A
(43) Publication Date : 31/01/2014

(54) Title of the invention : ELECTROSTATIC PARALLEL PLATE ACTUATORS AND METHODS USEFUL IN CONJUNCTION THEREWITH

(51) International classification :H01R1/40
(31) Priority Document No :61/312,797
(32) Priority Date :11/03/2010
(33) Name of priority country :U.S.A.
(86) International Application No :PCT/IL2011/000226
Filing Date :10/03/2011
(87) International Publication No : NA
(61) Patent of Addition to Application Number :NA
Filing Date :NA
(62) Divisional to Application Number :NA
Filing Date :NA

(71)**Name of Applicant :**
1)AUDIO PIXELS LTD.
Address of Applicant :3 Pekris Street 76702 Rehovot Israel
(72)**Name of Inventor :**
1)Yuval COHEN
2)Shay KAPLAN
3)Daniel LEWIN
4)Meir BEN SIMON
5)Eric Andreas HABER

(57) Abstract :
Actuator apparatus for generating a physical effect at least one attribute of which corresponds to at least one characteristic of a digital input signal sampled periodically in accordance with a sampling clock comprising at least one actuator device including an array of moving elements wherein each moving element is operative to be constrained to travel alternately back and forth along a respective axis responsive to an individual first electrostatic force operative thereupon and has at-rest position and driven away from at rest position solely by the first electrostatic force; at least one electrode operative to apply a controlled temporal sequence of potential differences with individual moving element from among array of moving elements thereby to selectably generate first electrostatic force; a controller operative to receive digital input signal and to control at least one of at least one electrode and individual moving element to apply sequence of potential differences.

No. of Pages : 55 No. of Claims : 25

(12) PATENT APPLICATION PUBLICATION
(19) INDIA
(22) Date of filing of Application :20/09/2012
(21) Application No.8130/CHENP/2012 A
(43) Publication Date : 31/01/2014

(54) Title of the invention : VEHICLE DOOR LOCK DEVICE

(51) International classification :E05B 65/20
(31) Priority Document No :2010-067897
(32) Priority Date :24/03/2010
(33) Name of priority country :Japan
(86) International Application No :PCT/JP2011/054907
Filing Date :03/03/2011
(87) International Publication No : NA
(61) Patent of Addition to Application Number :NA
Filing Date :NA
(62) Divisional to Application Number :NA
Filing Date :NA

(71)**Name of Applicant :**
1)AISIN SEIKI KABUSHIKI KAISHA
Address of Applicant :1 Asahi-machi 2-chome Kariya-shi Aichi 448-8650 Japan
(72)**Name of Inventor :**
1)Ryujiro AKIZUKI
2)Takashi NISHIO
3)Nobuko WATANABE
4)Yasuhiko SONO
5)Kazunori KOJIMA

(57) Abstract :
A vehicle door lock device includes a latch mechanism having a lift lever and further includes an inside open lever an outside open lever an open link and an active lever. A spring is interposed between the outside open lever and the open link. In the housing provided is an unlocked state holding guide for holding the open link in an unlocked state when the active lever is in an unlock position and when the outside open lever rotates. In the active lever provided is a locked state holding guide for holding the open link in a locked state when the active lever is in a lock position and when the outside open lever rotates. This construction enables reduction of the number of components and construction of the device in a simple and inexpensive manner.

No. of Pages : 50 No. of Claims : 8

(12) PATENT APPLICATION PUBLICATION
(19) INDIA
(22) Date of filing of Application :20/09/2012
(21) Application No.8127/CHENP/2012 A
(43) Publication Date : 31/01/2014

(54) Title of the invention : METHOD AND SYSTEM FOR HOST ROUTE REACHABILITY IN PACKET TRANSPORT NETWORK ACCESS RING

(51) International classification :H04L 12/56
(31) Priority Document No :201010122773.9
(32) Priority Date :11/03/2010
(33) Name of priority country :China
(86) International Application No :PCT/CN2010/078661
Filing Date :12/11/2010
(87) International Publication No : NA
(61) Patent of Addition to Application Number :NA
Filing Date :NA
(62) Divisional to Application Number :NA
Filing Date :NA

(71)**Name of Applicant :**
1)ZTE CORPORATION
Address of Applicant :ZTE Plaza Keji Road South Hi-Tech Industrial Park Nanshan Shenzhen Guangdong 518057 China
(72)**Name of Inventor :**
1)Wei LI
2)Daofeng LIU

(57) Abstract :
The disclosure discloses a method for realizing the reachability of a host route in an access ring of a Packet Transport Network (PTN), including: the layer-three interface of a convergence node is provided with a function of linkage between an Address Resolution Protocol (ARP) module and a static route module; the convergence node automatically updates a learned static route entry corresponding to a host address of an access node according to a learned ARP entry about each access node; and, the convergence node reports a current learned static route entry corresponding to the host address of the access node to a core node and other networks according to a dynamic route protocol. The disclosure discloses a system for realizing the reachability of a host route in an access ring of a PTN at the same time. By the method and system, when breaks simultaneously occur on the links between the access nodes of the access ring and the heartbeat wire between convergence nodes, all the access nodes associated with the other convergence node can normally communicate with the core node and other networks, so as to improve the fault resist capability of the access node in the PTN.

No. of Pages : 25 No. of Claims : 10

(12) PATENT APPLICATION PUBLICATION
(19) INDIA
(22) Date of filing of Application :20/09/2012
(21) Application No.8128/CHENP/2012 A
(43) Publication Date : 31/01/2014

(54) Title of the invention : METHOD FOR PRODUCING A HIGH-PURITY AROMATIC METHYL ALCOHOL AND HIGH-PURITY AROMATIC METHYL ALCOHOL COMPOSITION HAVING EXCELLENT PRESERVATION STABILITY

(51) International classification :C07C 43/23
(31) Priority Document No :2010-039618
(32) Priority Date :25/02/2010
(33) Name of priority country :Japan
(86) International Application No :PCT/JP2011/054349
Filing Date :25/02/2011
(87) International Publication No : NA
(61) Patent of Addition to Application Number :NA
Filing Date :NA
(62) Divisional to Application Number :NA
Filing Date :NA

(71)**Name of Applicant :**
1)UBE INDUSTRIES LTD.
Address of Applicant :1978-96 Oaza Kogushi Ube-shi Yamaguchi 755-8633 Japan
(72)**Name of Inventor :**
1)DOI Takashi
2)YOSHIDA Yoshihiro
3)DOUYAMA Daisuke
4)KATSURA Ryousuke
5)FUJITSU Satoru
6)YASUDA Shinji
7)KIMURA Keisuke
8)OOMORI Kiyoshi

(57) Abstract :
An object of the present invention is to provide a high-purity aromatic methyl alcohol compound having reduced a bis(arylmethyl) ether compound as a side product mixed thereinto and a high-purity aromatic methyl alcohol composition having excellent preservation stability and methods for producing them. The object of the present invention is achieved by a method for producing a high-purity aromatic methyl alcohol compound, which comprises obtaining a high-purity aromatic methyl alcohol compound in high yield from an aromatic methyl alcohol-containing crude product by subjecting the crude product to distillation in the presence of an anti-decomposition agent. Further, the object for the preservation stability is achieved by producing a high-purity aromatic methyl alcohol composition using the obtained high-purity aromatic methyl alcohol compound.

No. of Pages : 51 No. of Claims : 21

(12) PATENT APPLICATION PUBLICATION
(19) INDIA
(22) Date of filing of Application :30/12/2010
(21) Application No.4037/CHE/2010 A
(43) Publication Date : 31/01/2014

(54) Title of the invention : PROCESS FOR PREPARATION OF 2-HYDROXYBENZONITRILE

(51) International classification :C01B21/00
(31) Priority Document No :NA
(32) Priority Date :NA
(33) Name of priority country :NA
(86) International Application No :NA
Filing Date :NA
(87) International Publication No : NA
(61) Patent of Addition to Application Number :NA
Filing Date :NA
(62) Divisional to Application Number :NA
Filing Date :NA

(71)**Name of Applicant :**
1)Bhagiradha Chemicals & Industries Limited
Address of Applicant :Plot No.3 Sagar Society Road No.2 Banjara Hills Hyderabad - 500034 Andhra Pradesh India. Rwanda
(72)**Name of Inventor :**
1)Vinay Durgam
2)Naveen Krishna Bondalapati
3)Chandra Sekhar Singavarapu
4)Koteswara Rao Singavarapu

(57) Abstract :
1. The process for preparation of 2-hydroxybenzonitrile using salicylaldehyde as the starting material by a reaction, comprising; (a), salicylaldehyde and hydroxylamine or its derivatives in a molar ratio to produce salicylaldoxime using a base. (b). And further reacting salicylaldoxime with acid chloride to produce 2-hydroxybenzonitrile, in presence of a solvent

No. of Pages : 10 No. of Claims : 9

(12) PATENT APPLICATION PUBLICATION
(19) INDIA
(22) Date of filing of Application :07/09/2012
(21) Application No.7741/CHENP/2012 A
(43) Publication Date : 31/01/2014

(54) Title of the invention : CURABLE COMPOSITION

(51) International classification :C08L 71/02
(31) Priority Document No :2010-056554
(32) Priority Date :12/03/2010
(33) Name of priority country :Japan
(86) International Application No :PCT/JP2011/055700
Filing Date :10/03/2011
(87) International Publication No : NA
(61) Patent of Addition to Application Number :NA
Filing Date :NA
(62) Divisional to Application Number :NA
Filing Date :NA

(71)**Name of Applicant :**
1)Asahi Glass Company Limited
Address of Applicant :5-1 Marunouchi 1-chome Chiyoda-ku Tokyo 1008405 Japan
(72)**Name of Inventor :**
1)Yoshitaka Sunayama
2)Yuki Hatanaka
3)Hideaki Tanaka

(57) Abstract :
An odorless curable composition containing a hydrolyzable silyl group-containing urethane compound with good storage stability is provided. A curable composition comprising 100 parts by mass of a polymer (P) obtained by a urethane-forming reaction of a polymer (pP) having a polyoxyalkylene chain and hydroxyl groups and a compound (U) represented by the following formula (I): Si(X1)m(R1)3-m-Q-NCO (I) (wherein Q is a C2-20 bivalent linear hydrocarbon group, X1 is a C1-6 alkoxy group, R1 is a C1-6 alkyl group, and m is an integer of from 1 to 3) in the presence of a urethaneforming catalyst and from 0.0001 to 0.1 part by mass of an inorganic acid or an organic acid having an active hydrogen bonded to an oxygen atom.

No. of Pages : 33 No. of Claims : 8

(12) PATENT APPLICATION PUBLICATION
(19) INDIA
(22) Date of filing of Application :07/09/2012
(21) Application No.7742/CHENP/2012 A
(43) Publication Date : 31/01/2014

(54) Title of the invention : HEAT EXCHANGER AND HEAT-EXCHANGER-INTEGRATED OXYGENATOR

(51) International classification :A61M 1/36
(31) Priority Document No :2010-030296
(32) Priority Date :15/02/2010
(33) Name of priority country :Japan
(86) International Application No :PCT/JP2011/053073
Filing Date :15/02/2011
(87) International Publication No : NA
(61) Patent of Addition to Application Number :NA
Filing Date :NA
(62) Divisional to Application Number :NA
Filing Date :NA

(71)**Name of Applicant :**
1)NIPRO CORPORATION
Address of Applicant :9-3 Honjo-nishi 3-chome Kita-ku Osaka-shi Osaka 531-8510 Japan
(72)**Name of Inventor :**
1)Shin-ichi KAWAMURA
2)Kazuhisa ISHIHARA
3)Naoaki YASUMURA

(57) Abstract :
A heat exchanger includes a heat exchanger case, a bottom member (90B) attached to one end of the heat exchanger case, and a plurality of heat transfer pipes (a pipe group 80) loaded in the inside of the heat exchanger case, in which blood flows from one end through the bottom member (90B). The bottom member (90B) has an annular wall (93), a bottom surface (96), and a blood inlet port (98). The bottom surface (96) is opposed to one end of the heat transfer pipe. The bottom surface (96) includes a groove portion (96c) and a raised bottom portion (96a, 96b) provided on each of opposing end sides of the groove portion (96c). The raised bottom portion (96a, 96b) is inclined such that a distance (H2) between the raised bottom portion (96a, 96b) on a side where the blood inlet port (98) is provided and one end of the heat transfer pipe is smaller than a distance (H1) between the raised bottom portion (96a, 96b) opposite to the side where the blood inlet port (98) is provided and one end of the heat transfer pipe. Flow of blood to each heat transfer pipe (pipe group 80) becomes uniform and high heat exchange performance can be obtained.

No. of Pages : 52 No. of Claims : 7

(12) PATENT APPLICATION PUBLICATION
(19) INDIA
(22) Date of filing of Application :14/09/2012
(21) Application No.7932/CHENP/2012 A
(43) Publication Date : 31/01/2014

(54) Title of the invention : PROCESS FOR THE PREPARATION OF COATED MONOLITHS

(51) International classification :B01J 37/02
(31) Priority Document No :61/319,888
(32) Priority Date :01/04/2010
(33) Name of priority country :U.S.A.
(86) International Application No :PCT/IB2011/051377
Filing Date :31/03/2011
(87) International Publication No : NA
(61) Patent of Addition to Application Number :NA
Filing Date :NA
(62) Divisional to Application Number :NA
Filing Date :NA

(71)**Name of Applicant :**
1)BASF SE
Address of Applicant :67056 Ludwigshafen Germany
2)BASF CORPORATION
(72)**Name of Inventor :**
1)LINSENBHLER Markus
2)SACHWEH Bernd
3)NEMEH Saadallah
4)DEEBA Michel
5)MERTLER Michael
6)MEIER Matthias Wilhelm

(57) Abstract :
The invention relates to a monolithic support member comprising channels with walls separating the channels from each other and having a coating deposited thereon, the non-coated channels having a polygonal cross-section profile, wherein the mean thickness dC of the coating in a corner of said cross-section profile is smaller than or equal to the mean thickness dE of the coating on an edge of said cross-section profile plus 85 micrometer; and further relates to a method for the preparation of such coated monolithic support member, the method comprising (i) providing a suspension having a viscosity in the range of from 0.5 to 100 mPas and having a solid content in the range of from 1 to 40 wt.-%, (ii) dispersing the suspension into a gas stream to obtain a gas stream comprising droplets having a droplet size in the range of from d10 greater than or equal to 1 micrometer to d90 smaller than or equal to 100 micrometer; and (iii) directing said gas stream comprising said droplet towards the monolithic support member along the axial direction of the channels of the support; and still further relates to the use of such coated monolithic support member, in particular as catalytic article in the automotive exhaust gas treatment.

No. of Pages : 46 No. of Claims : 38

(12) PATENT APPLICATION PUBLICATION
(19) INDIA
(22) Date of filing of Application :13/09/2012
(21) Application No.7906/CHENP/2012 A
(43) Publication Date : 31/01/2014

(54) Title of the invention : SYSTEM FOR PREVENTING DETERIORATION OF STORAGE CAPACITY OF LEAD ACID BATTERY AND REUSING LEAD ACID BATTERY BY ELECTRICAL TREATMENT

(51) International classification :H01M 10/42
(31) Priority Document No :2010-031600
(32) Priority Date :16/02/2010
(33) Name of priority country :Japan
(86) International Application No :PCT/JP2011/052336
Filing Date :04/02/2011
(87) International Publication No : NA
(61) Patent of Addition to Application Number :NA
Filing Date :NA
(62) Divisional to Application Number :NA
Filing Date :NA

(71)**Name of Applicant :**
1)JSV CO. LTD.
Address of Applicant :4128-8 Tagami-chou Kagoshima-shi Kagoshima 8900035 Japan
2)TATENO Hiroto
(72)**Name of Inventor :**
1)TATENO Hiroto

(57) Abstract :
A system for removing a layer of lead sulfate insulation crystals in which lead sulfate is selectively subjected to heating by dielectric relaxation loss at a peak frequency of lead sulfate dielectric relaxation loss of 10 MHz thereby finely decomposing the crystals which have turned into poor conductors to oxidize positive electrodes of lead oxide and reduce negative electrodes of elemental lead by charging current.

No. of Pages : 17 No. of Claims : 6

(12) PATENT APPLICATION PUBLICATION
(19) INDIA
(22) Date of filing of Application :13/09/2012
(21) Application No.7907/CHENP/2012 A
(43) Publication Date : 31/01/2014

(54) Title of the invention : CORNEAL REMODELLING CONTACT LENSES AND METHODS OF TREATING REFRACTIVE ERROR USING CORNEAL REMODELLING

(51) International classification :G02C 7/04
(31) Priority Document No :2010900903
(32) Priority Date :03/03/2010
(33) Name of priority country :Australia
(86) International Application No :PCT/AU2011/000234
Filing Date :03/03/2011
(87) International Publication No : NA
(61) Patent of Addition to Application Number :NA
Filing Date :NA
(62) Divisional to Application Number :NA
Filing Date :NA

(71)**Name of Applicant :**
1)BRIEN HOLDEN VISION INSTITUTE
Address of Applicant :Level 4 North Wing Rupert Myers Building Gate 14 Barker Street University of New South Wales Sydney New South Wales 2052 Australia
(72)**Name of Inventor :**
1)HO Arthur
2)SANKARIDURG Padmaja Rajagopal
3)HOLDEN Brien Anthony
4)LAZON Percy Fabian
5)CHEN Xiang
6)CONRAD Fabian
7)SMITH Earl Leo III

(57) Abstract :
Contact lenses are described with a corneal remodelling effect. This corneal remodelling effect is one or both of broad-area corneal remodelling and localised remodelling. The contact lenses may also have a refractive power. The refractive power may vary across the lens and for myopia may have increased power centrally. The increased power may be provided over a lens area that has increased thickness due to localised remodelling.

No. of Pages : 34 No. of Claims : 30

(12) PATENT APPLICATION PUBLICATION
(19) INDIA
(22) Date of filing of Application :19/09/2012
(21) Application No.8077/CHENP/2012 A
(43) Publication Date : 31/01/2014

(54) Title of the invention : AN ECHO CANCELLER AND A METHOD THEREOF

(51) International classification :H04B3/23
(31) Priority Document No :NA
(32) Priority Date :NA
(33) Name of priority country :NA
(86) International Application No :PCT/SE2010/050441
Filing Date :22/04/2010
(87) International Publication No : NA
(61) Patent of Addition to Application Number :NA
Filing Date :NA
(62) Divisional to Application Number :NA
Filing Date :NA

(71)**Name of Applicant :**
1)TELEFONAKTIEBOLAGET LM ERICSSON (PUBL)
Address of Applicant :SE-164 83 Stockholm Sweden Sweden
(72)**Name of Inventor :**
1)ERIKSSON Anders
2)…HGREN Per

(57) Abstract :
The present invention relates to an echo canceller (300) for estimating a model of an echo signal and a method thereof. The echo canceller comprises at least an adaptive main filter (301) for modeling the echo signal and an adaptive shadow filter (302) for modeling the echo signal. The adaptive main filter is an adaptive filter for which the adaptation speed is proportional to a system noise estimate and the adaptation speed of the shadow filter (302) is faster than the adaptation speed of the adaptive main filter (301). The echo canceller (300) comprises a processor (303) for determining whether the adaptive shadow filter models the echo signal better than the adaptive main filter and an updater (304) for updating the system noise estimate of the adaptive main filter (301) if the adaptive shadow filter models (302) the echo signal better than the adaptive main filter (301).

No. of Pages : 21 No. of Claims : 14

(12) PATENT APPLICATION PUBLICATION
(19) INDIA
(22) Date of filing of Application :19/09/2012
(21) Application No.8078/CHENP/2012 A
(43) Publication Date : 31/01/2014

(54) Title of the invention : CONTINUOUS SILICA PRODUCTION PROCESS AND SILICA PRODUCT PREPARED FROM SAME

(51) International classification	:A61K8/25, C01B33/193
(31) Priority Document No	:12/711,321
(32) Priority Date	:24/02/2010
(33) Name of priority country	:U.S.A.
(86) International Application No	:PCT/US2011/025626
Filing Date	:21/02/2011
(87) International Publication No	: NA
(61) Patent of Addition to Application Number	:NA
Filing Date	:NA
(62) Divisional to Application Number	:NA
Filing Date	:NA

(71)**Name of Applicant :**
1)J.M. HUBER CORPORATION
Address of Applicant :3100 Cumberland Blvd Suite 600 Atlanta GA 30399 United States of America
(72)**Name of Inventor :**
1)HAGAR William J.
2)GALLIS Karl W.

(57) Abstract :
Disclosed herein is a continuous process for preparing a silica product comprising: (a) continuously feeding an acidulating agent and an alkali metal silicate into a loop reaction zone comprising a stream of liquid medium; wherein at least a portion of the acidulating agent and the alkali metal silicate react to form a silica product in the liquid medium of the loop reaction zone; (b) continuously recirculating the liquid medium through the loop reaction zone; and (c) continuously discharging from the loop reaction zone a portion of the liquid medium comprising the silica product. Silica products and dentifrice compositions comprising the silica products are also disclosed. A continuous loop reactor is also disclosed.

No. of Pages : 66 No. of Claims : 35

(12) PATENT APPLICATION PUBLICATION
(19) INDIA
(22) Date of filing of Application :19/09/2012
(21) Application No.8079/CHENP/2012 A
(43) Publication Date : 31/01/2014

(54) Title of the invention : PROCESSES FOR THE SYNTHESIS OF DIARYLTHIOHYDANTOIN AND DIARYLHYDANTOIN COMPOUNDS

(51) International classification	:A01N43/50, A61K31/415
(31) Priority Document No	:61/307,796
(32) Priority Date	:24/02/2010
(33) Name of priority country	:U.S.A.
(86) International Application No	:PCT/US2011/026135
Filing Date	:24/02/2011
(87) International Publication No	: NA
(61) Patent of Addition to Application Number	:NA
Filing Date	:NA
(62) Divisional to Application Number	:NA
Filing Date	:NA

(71)**Name of Applicant :**
1)MEDIVATION PROSTATE THERAPEUTICS INC.
Address of Applicant :201 Spear Street 3rd Floor San Francisco CA 94105 United States of America
(72)**Name of Inventor :**
1)JAIN Rajendra Parasmal
2)ANGELAUD Remy
3)THOMPSON Andrew
4)LAMBERSON Carol
5)GREENFIELD Scott

(57) Abstract :
Processes are provided for the synthesis of diarylthiohydantoin and diarylhydantoin compounds such as compounds of the formula: wherein X Y1 Y2 R1 and R2 are as defined herein. Medicinal products containing the same find particular use in treating prostate cancer including castration-resistant prostate cancer and/or hormone-sensitive prostate cancer.

No. of Pages : 63 No. of Claims : 39

(12) PATENT APPLICATION PUBLICATION
(19) INDIA
(22) Date of filing of Application :03/09/2012
(21) Application No.7610/CHENP/2012 A
(43) Publication Date : 31/01/2014

(54) Title of the invention : ALUMINUM ALLOY HEAT EXCHANGER

(51) International classification :F28F 21/08
(31) Priority Document No :2010-045734
(32) Priority Date :02/03/2010
(33) Name of priority country :Japan
(86) International Application No :PCT/JP2011/054319
Filing Date :25/02/2011
(87) International Publication No : NA
(61) Patent of Addition to Application Number :NA
Filing Date :NA
(62) Divisional to Application Number :NA
Filing Date :NA

(71)**Name of Applicant :**
1)Mitsubishi Aluminum Co. Ltd.
Address of Applicant :3-3 Shiba 2-chome Minato-ku Tokyo 105-8546 Japan
(72)**Name of Inventor :**
1)Yasunori HYOGO
2)Michihide YOSHINO

(57) Abstract :
An aluminum alloy heat exchanger formed by assembling and brazing an aluminum alloy tube and an aluminum alloy fin to each other, wherein a coating for brazing comprising 1 to 5 g/m2 of Si powder, 3 to 20 g/m2 of Zn containing flux, and 0.2 to 8.3 g/m2 of binder is formed on the surface of the aluminum alloy tube; the fin contains 0.8 to 2.0% by mass of Mn, Si in an amount of 1/2.5 to 1/3.5 of Mn content; less than 0.30% by mass of Fe, and Zn in an amount that is controlled in relation with the amount of the Zn containing flux in the coating for brazing to be in a region enclosed by points A, B, C, D, E, F of FIG. 5; a fillet comprising brazing filler of the coating for brazing is formed between the tube and the aluminum alloy fin after the brazing; a primary crystal portion that joins the fin and the tube is formed in the fillet; a eutectic crystal portion is formed in a portion other than the primary crystal portion; and an electric potential of the primary crystal portion is set equal to an electric potential of the aluminum alloy fin or higher than the electric potential of the aluminum alloy fin.

No. of Pages : 41 No. of Claims : 4

(12) PATENT APPLICATION PUBLICATION
(19) INDIA
(22) Date of filing of Application :03/09/2012

(21) Application No.7596/CHENP/2012 A
(43) Publication Date : 31/01/2014

(54) Title of the invention : A VIBRATORY INSTRUMENT WITH AN INTERCHANGEABLE TOOL

(51) International classification :A61C 1/14
(31) Priority Document No :1051803
(32) Priority Date :12/03/2010
(33) Name of priority country :France
(86) International Application No :PCT/FR2011/050444
Filing Date :03/03/2011
(87) International Publication No : NA
(61) Patent of Addition to Application Number :NA
Filing Date :NA
(62) Divisional to Application Number :NA
Filing Date :NA

(71)**Name of Applicant :**
1)SOCIETE POUR LA CONCEPTION DES APPLICATIONS DES TECHNIQUES ELECTRONIQUES
Address of Applicant :17 avenue Gustave Eiffel Zone Industrielle du Phare F-33700 Merignac France
2)LESAGE Patrick
(72)**Name of Inventor :**
1)LESAGE Patrick
2)RICHER Jean-Michel
3)PINEL Alain

(57) Abstract :
A vibratory instrument (200) comprising a tool (220) releasably mounted on a tool carrier (210), said tool carrier being designed to be mechanically coupled in rigid manner with a vibration generator device. The tool (220) comprises in succession along a longitudinal axis: a working portion (221) presenting a free end for reproducing the vibration transmitted by the vibration generator device; a coupling portion (223); and an elastically-deformable attachment portion (222) disposed upstream from the coupling portion (223). The tool carrier (210) comprises in succession along a longitudinal axis: a housing (214) receiving the attachment portion (222) of said tool; and a coupling bearing (215) surrounding the coupling portion (223) of the tool (220), at least in part. The attachment portion (222) of the tool (220) presents outside dimensions that are adapted relative to the inside dimensions of the housing (214) of the tool carrier (210) so as to prevent contact between said attachment portion and said housing when the coupling portion (223) of the tool (220) is in contact with the coupling bearing (215) of the tool carrier (210).

No. of Pages : 37 No. of Claims : 13

(12) PATENT APPLICATION PUBLICATION
(19) INDIA
(22) Date of filing of Application :31/12/2010
(21) Application No.4047/CHE/2010 A
(43) Publication Date : 31/01/2014

(54) Title of the invention : CIRCUIT BREAKER

(51) International classification :H01H3/00
(31) Priority Document No :NA
(32) Priority Date :NA
(33) Name of priority country :NA
(86) International Application No :NA
Filing Date :NA
(87) International Publication No : NA
(61) Patent of Addition to Application Number :NA
Filing Date :NA
(62) Divisional to Application Number :NA
Filing Date :NA

(71)**Name of Applicant :**
1)ABB TECHNOLOGY LTD
Address of Applicant :AFFOLTERNSTRASSE 44, CH-8050 ZURICH Switzerland
(72)**Name of Inventor :**
1)SUBBIAHTHEVER DUKKAIAPPAN
2)BHUSHAN KULKARNI
3)PRASAD DEOLE
4)VIKAS VISWARAO JAKATE

(57) Abstract :
The invention provides a circuit breaker comprising a transmission mechanism. The transmission mechanism is connected to an appropriate link of the operating mechanism of the circuit breaker at its one end and to the movable contact of the circuit breaker at its other end. The transmission mechanism of the circuit breaker is provided for transmitting the movement provided by the operating mechanism to the movable contact. The transmission mechanism comprises at least one wire rope connected to the operating mechanism at its one end and to a lever at its other end for operating the movable contact, and the wire rope is movable over a pulley.

No. of Pages : 16 No. of Claims : 10

(12) PATENT APPLICATION PUBLICATION
(19) INDIA
(22) Date of filing of Application :22/08/2012
(21) Application No.3455/CHE/2012 A
(43) Publication Date : 31/01/2014

(54) Title of the invention : OPERTING METHOD FOR A VEHICLE

(51) International classification :G01F23/00
(31) Priority Document No :10 2011 111 555.6
(32) Priority Date :26/08/2011
(33) Name of priority country :Germany
(86) International Application No :NA
Filing Date :NA
(87) International Publication No : NA
(61) Patent of Addition to Application Number :NA
Filing Date :NA
(62) Divisional to Application Number :NA
Filing Date :NA

(71)**Name of Applicant :**
1)MAN TRUCK & BUS AG
Address of Applicant :DACHAUER STR. 667, 80995 MUNCHEN Germany
(72)**Name of Inventor :**
1)FRANCESCO BRUNO
2)OLAF FRANKE

(57) Abstract :
The invention relates to an operating method for a vehicle. The operating method com prises the steps of measurement (S1) of a filling level of a liquid in a vehicle container by means of a measuring means, assignment (S2) of a measured filling level to a closest filling level threshold from a multiplicity of known filling level thresholds, wherein each fill ing level threshold represents a defined filling value, activation (S3) of at least one filling level threshold from the multiplicity of filling level thresholds by means of the measuring means, analysis (S4.1, S4.2) of the frequention of an activation of a filling level threshold and/or a frequention of an assignment of a measured filling level to a closest filling level threshold, and determination (S5) of the filling level threshold which has a maximum fre quention relative to a defined period of time and therefore represents a realistic filling val ue, in particular for the time during which the next determination is carried out. A realistic filling value can advantageously be determined, from which measuring errors which arise due to sloshing of the liquid as a function of the driving situation and interfering variables, for example measuring noise or other errors caused by measuring technology, are elimi nated.

No. of Pages : 19 No. of Claims : 20

(12) PATENT APPLICATION PUBLICATION
(19) INDIA
(22) Date of filing of Application :28/12/2010
(21) Application No.3979/CHE/2010 A
(43) Publication Date : 31/01/2014

(54) Title of the invention : INDUCTION CONDUITS FOR AN ENGINE

(51) International classification :F02M
(31) Priority Document No :NA
(32) Priority Date :NA
(33) Name of priority country :NA
(86) International Application No :NA
Filing Date :NA
(87) International Publication No : NA
(61) Patent of Addition to Application Number :NA
Filing Date :NA
(62) Divisional to Application Number :NA
Filing Date :NA

(71)**Name of Applicant :**
1)TVS MOTOR COMPANY LIMITED
Address of Applicant :JAYALAKSHMI ESTATES NO.29 (OLD NO.8) HADDOWS ROAD, CHENNAI 600 006 Tamil Nadu India
(72)**Name of Inventor :**
1)VARADHA IYENGAR LAKSHMINARASIMHAN
2)DHARMAPURI NAGENDRA KUMAR
3)MALUVADU SUNDARAMAN ANAND KUMAR

(57) Abstract :
As per an embodiment, on acceleration the first fluid charge (air fuel mixture) is provided through primary intake port and then second fluid charge through the secondary intake port only when primary intake port is substantially open. The opening of secondary intake passage is done mechanically after a predetermined percentage throttle pull of a throttle cable is reached.

No. of Pages : 15 No. of Claims : 9

(12) PATENT APPLICATION PUBLICATION
(19) INDIA
(22) Date of filing of Application :28/12/2010
(21) Application No.3980/CHE/2010 A
(43) Publication Date : 31/01/2014

(54) Title of the invention : TAIL COVER ASSEMBLY

(51) International classification :B62J6/00
(31) Priority Document No :NA
(32) Priority Date :NA
(33) Name of priority country :NA
(86) International Application No :NA
Filing Date :NA
(87) International Publication No : NA
(61) Patent of Addition to Application Number :NA
Filing Date :NA
(62) Divisional to Application Number :NA
Filing Date :NA

(71)**Name of Applicant :**
1)TVS MOTOR COMPANY LIMITED
Address of Applicant :JAYALAKSHMI ESTATES NO.29 (OLD NO.8) HADDOWS ROAD, CHENNAI 600 006 Tamil Nadu India
(72)**Name of Inventor :**
1)RAJAMANI RAVISANKAR
2)THANIKACHALAM GUNALAN
3)RAMANATHAN ANANTHA NARAYANAN
4)NITHIN KUMAR PADAVU

(57) Abstract :
The present invention provides a tail cover assembly for use in a two wheeler which comprises a tail cover right piece, a tail cover left piece and a tail cover centre piece disposed between the tail cover right and tail cover left. At least one slot is provided on the rear side of the tail cover centre piece. The slot on the rear side of the tail cover centre piece accommodates a respective projection from the tail lamp and the tail cover right piece and tail cover left piece is mounted to the upper tubes of the vehicle body frame.

No. of Pages : 16 No. of Claims : 2

(12) PATENT APPLICATION PUBLICATION
(19) INDIA
(22) Date of filing of Application :28/12/2010
(21) Application No.3981/CHE/2010 A
(43) Publication Date : 31/01/2014

(54) Title of the invention : HEADLAMP HOUSING FOR MOTORCYCLE

(51) International classification :B60Q1/00
(31) Priority Document No :NA
(32) Priority Date :NA
(33) Name of priority country :NA
(86) International Application No :NA
Filing Date :NA
(87) International Publication No : NA
(61) Patent of Addition to Application Number :NA
Filing Date :NA
(62) Divisional to Application Number :NA
Filing Date :NA

(71)**Name of Applicant :**
1)TVS MOTOR COMPANY LIMITED
Address of Applicant :JAYALAKSHMI ESTATES NO.29 (OLD NO.8) HADDOWS ROAD, CHENNAI 600 006 Tamil Nadu India
(72)**Name of Inventor :**
1)RAJAMANI RAVISANKAR
2)THANIKACHALAM GUNALAN
3)RAMANATHAN ANANTHA NARAYANAN
4)SOLOMON DURAISAMY MATHANKUMAR JEBARAJ

(57) Abstract :
A headlamp housing assembly for two wheelers is provided with a headlamp housing front and a headlamp housing rear. A flap is provided on the front edge of the headlamp housing rear and two rubber grommets are attached to the flap. An extended screen is provided on the headlamp housing front to avoid light leakage and a depression is provided in the headlamp housing rear to carry any small article.

No. of Pages : 15 No. of Claims : 3

(12) PATENT APPLICATION PUBLICATION
(19) INDIA
(22) Date of filing of Application :18/09/2012
(21) Application No.8029/CHENP/2012 A
(43) Publication Date : 31/01/2014

(54) Title of the invention : MULTI-PILLAR STRUCTURE FOR MOLECULAR ANALYSIS

(51) International classification :G01N 21/65
(31) Priority Document No :NA
(32) Priority Date :NA
(33) Name of priority country :NA
(86) International Application No :PCT/US2010/031790
Filing Date :20/04/2010
(87) International Publication No : NA
(61) Patent of Addition to Application Number :NA
Filing Date :NA
(62) Divisional to Application Number :NA
Filing Date :NA

(71)**Name of Applicant :**
1)HEWLETT-PACKARD DEVELOPMENT COMPANY L.P.
Address of Applicant :11445 Compaq Center Drive West Houston Texas 77070 United States of America
(72)**Name of Inventor :**
1)ZHIYONG LI
2)MIN HU
3)FUNG SUONG OU
4)WEI WU
5)R. STANLEY WILLIAMS

(57) Abstract :
A multi-pillar structure for molecular analysis is provided. The structure comprises at least two nanopoles each nanopole attached at one end to a substrate and freely movable along its length. The opposite ends of the at least two nanopoles are each capable of movement toward each other to trap at least one analyte molecule at their opposite ends. Each nanopole is coated with a metal coating. An array of such multi-pillar structures is also provided. A method for preparing the multi-pillar structure is further provided.

No. of Pages : 25 No. of Claims : 14

(12) PATENT APPLICATION PUBLICATION
(19) INDIA
(22) Date of filing of Application :18/09/2012
(21) Application No.8030/CHENP/2012 A
(43) Publication Date : 31/01/2014

(54) Title of the invention : METHOD AND APPARATUS FOR IDENTITY FEDERATION GATEWAY

(51) International classification :H04L 29/06
(31) Priority Document No :12/708,764
(32) Priority Date :19/02/2010
(33) Name of priority country :U.S.A.
(86) International Application No :PCT/FI2011/050118
Filing Date :10/02/2011
(87) International Publication No : NA
(61) Patent of Addition to Application Number :NA
Filing Date :NA
(62) Divisional to Application Number :NA
Filing Date :NA

(71)**Name of Applicant :**
1)NOKIA CORPORATION
Address of Applicant :Keilalahdentie 4 FIN-02150 Espoo Finland
(72)**Name of Inventor :**
1)Jari Otranen
2)Jari Anssi Petteri Mononen
3)Jari Mikael Pehkonen
4)Pasi Allan Lantiainen

(57) Abstract :
Techniques for an ID federation gateway include determining whether a user associated with a request for a particular network resource is to be identified by the provider of the particular service or by a different party. The service also comprises causing the different party to provide identification data that indicates an identity for the user, if the user is to be identified by the different party. The method further comprises causing user credentials data, based on the identification data, to be sent to an authentication process of the provider for a set of one or more network resources that includes the particular network resource requested by the user, if the data indicates that the user is successfully identified.

No. of Pages : 42 No. of Claims : 25

(12) PATENT APPLICATION PUBLICATION
(19) INDIA
(22) Date of filing of Application :18/11/2011
(21) Application No.3950/CHE/2011 A
(43) Publication Date : 31/01/2014

(54) Title of the invention : AN IMPROVED HOLDING ARRANGEMENT FOR PLUCKING HEAD

(51) International classification	:A22C 21/00
(31) Priority Document No	:NA
(32) Priority Date	:NA
(33) Name of priority country	:NA
(86) International Application No	:NA
Filing Date	:NA
(87) International Publication No	: NA
(61) Patent of Addition to Application Number	:NA
Filing Date	:NA
(62) Divisional to Application Number	:NA
Filing Date	:NA

(71)**Name of Applicant :**
1)LAKSHMI MACHINE WORKS LTD.
Address of Applicant :PERIANAICKENPALAYAM, COIMBATORE 641 020 Tamil Nadu India
(72)**Name of Inventor :**
1)GOVINDHARAJULU MANI
2)RAMASAMY DAKSHINAMOORTHY
3)SULUR ANGANNAN SARAVANAKUMAR

(57) Abstract :
A bale plucking machine for plucking fibers from bales arranged on both sides of the machine comprising a carriage (2); at least two beams (8, 8') mounted on platform (9) of the carriage (2); swing structure (6) for sliding in vertical direction against the beams (8, 8'); a plucking head (5) mounted on said swing structure (6) by means of connecting elements (19) and locking elements (11, 11'); wherein rolling members (7a, 7a', 7a) are provided for sliding.

No. of Pages : 13 No. of Claims : 8

(12) PATENT APPLICATION PUBLICATION
(19) INDIA
(22) Date of filing of Application :28/09/2012
(21) Application No.4065/CHE/2012 A
(43) Publication Date : 31/01/2014

(54) Title of the invention : METHOD FOR LOCATING CURRENT-CONSUMING POINTS IN AN ELECTRICAL CURRENT DISTRIBUTION SYSTEM, ASSOCIATED PROCESSING DEVICE, CURRENT SENSOR AND CURRENT METER

(51) International classification :G01R31/00
(31) Priority Document No :11 58918
(32) Priority Date :03/10/2011
(33) Name of priority country :France
(86) International Application No :NA
Filing Date :NA
(87) International Publication No : NA
(61) Patent of Addition to Application Number :NA
Filing Date :NA
(62) Divisional to Application Number :NA
Filing Date :NA

(71)**Name of Applicant :**
1)SCHNEIDER ELECTRIC INDUSTRIES SAS
Address of Applicant :35, RUE JOSEPH MONIER, F-92500 RUEIL MALMAISON France
(72)**Name of Inventor :**
1)CLEMENCE, MICHEL
2)CONTINI, ERICK
3)COUTELOU, OLIVIER
4)WATERLOT, FREDERIC

(57) Abstract :
Method for locating current-consuming points in an electrical current distribution system, associated processing device, current sensor and current meter. The invention relates to a method for locating current-consuming points (10a1, 10b1) in a current distribution system (1) each associated with at least one electric charge, respective current cables (20a1, 20b1) connecting each consumer point to the central node, the distribution system comprising a processing module (40); comprising the following steps, after installation on the cables of current sensors (21a1> 21M), suitable for measuring the current circulating in the respective associated cables: - selection of a consumer point by the processing module (40); - implementation, at the consumer point and upon reception of a command transmitted by that processing module, of a connection and/or disconnection operation to said electric charge associated with the selected consumer point; - selection, among the current sensors (21a1, 21b1) and as a function at least of respective measurements done by said sensors and a standard current variation profile determined as a function of the commanded operation, of the current sensor associated with a cable connecting the selected consumer point.

No. of Pages : 25 No. of Claims : 24

(12) PATENT APPLICATION PUBLICATION
(19) INDIA
(22) Date of filing of Application :29/12/2010
(21) Application No.4009/CHE/2010 A
(43) Publication Date : 31/01/2014

(54) Title of the invention : SYSTEM AND METHOD FOR TRACKING SHAPE CHANGING BODIES

(51) International classification :G01D5/00
(31) Priority Document No :NA
(32) Priority Date :NA
(33) Name of priority country :NA
(86) International Application No :NA
Filing Date :NA
(87) International Publication No : NA
(61) Patent of Addition to Application Number :NA
Filing Date :NA
(62) Divisional to Application Number :NA
Filing Date :NA

(71)**Name of Applicant :**
1)LOGICA PRIVATE LIMITED
Address of Applicant :Divyasree Technopolis 124-125 Yemlur Main Road Yemlur P.O. Off Airport Road Bangalore 560037 Karnataka India
(72)**Name of Inventor :**
1)Shanmugasundaram Murugesan

(57) Abstract :
The present invention provides a system and method for tracking shape changing bodies loaded on a material handling device. In one embodiment, a shape tracking system includes a first three dimensional sensor unit operable for scanning a section of shape changing bodies loaded on a material handling device at a first location, and a second three dimensional sensor unit operable for scanning the section of shape changing bodies loaded on the material handling device at a second location. The shape tracking system further includes a processor operable for creating a first signature and a second signature associated with the section of the shape changing bodies at the first location and the second location respectively, and comparing the first signature and the second signature of the section of the shape changing bodies. Moreover, the shape tracking system includes a display operable for outputting a result based on the outcome of comparison.

No. of Pages : 16 No. of Claims : 24

(12) PATENT APPLICATION PUBLICATION
(19) INDIA
(22) Date of filing of Application :01/09/2012
(21) Application No.7562/CHENP/2012 A
(43) Publication Date : 31/01/2014

(54) Title of the invention : ALARM CONSOLIDATION SYSTEM AND METHOD

(51) International classification :G08B 26/00
(31) Priority Document No :12/700,665
(32) Priority Date :04/02/2010
(33) Name of priority country :U.S.A.
(86) International Application No :PCT/US2011/023548
Filing Date :03/02/2011
(87) International Publication No : NA
(61) Patent of Addition to Application Number :NA
Filing Date :NA
(62) Divisional to Application Number :NA
Filing Date :NA

(71)**Name of Applicant :**
1)AMERICAN POWER CONVERSION CORPORATION
Address of Applicant :132 Fairgrounds Road West Kingston RI 02892 United States of America
(72)**Name of Inventor :**
1)FISKE Adam M.
2)HARGRAVES Katie M.
3)CONDOR Michael B.

(57) Abstract :
Methods and system for consolidating alarms using a data center monitoring appliance are provided. The method includes receiving at least one alarm from an physical infrastructure device via the network, determining that the at least one alarm is subject to a consolidation filter, the consolidation filter specifying characteristics of a consolidated alarm and generating the consolidated alarm according to the characteristics specified in the consolidation filter. The system includes a network interface, a memory and a controller coupled to the network interface and the memory and configured to receive at least one alarm from an physical infrastructure device via the network interface, determine that the at least one alarm is subject to a consolidation filter, the consolidation filter specifying characteristics of a consolidated alarm and generate the consolidated alarm according to the characteristics specified in the consolidation filter.

No. of Pages : 38 No. of Claims : 16

(12) PATENT APPLICATION PUBLICATION
(19) INDIA
(22) Date of filing of Application :01/09/2012
(21) Application No.7563/CHENP/2012 A
(43) Publication Date : 31/01/2014

(54) Title of the invention : DETECTION OF ISLANDING FOR GRID CONNECTED INVERTER

(51) International classification :H02J 3/38
(31) Priority Document No :12/699,652
(32) Priority Date :03/02/2010
(33) Name of priority country :U.S.A.
(86) International Application No :PCT/US2011/023100
Filing Date :31/01/2011
(87) International Publication No : NA
(61) Patent of Addition to Application Number :NA
Filing Date :NA
(62) Divisional to Application Number :NA
Filing Date :NA

(71)**Name of Applicant :**
1)XANTREX TECHNOLOGY INC.
Address of Applicant :161-C South Vasco Road Livermore CA 94551 United States of America
(72)**Name of Inventor :**
1)YIN Jun
2)FAN Chi-Sheng
3)GARABANDIC Djordje

(57) Abstract :
An anti-islanding implementation that introduces a small continuously varying phase shift pattern in the output current of an inverter. In grid-connected mode this phase shift pattern has no impact on the frequency of the inverter™s output voltage. However when islanded the phase shift will cause the voltage frequency to deviate from nominal. Changes in the output current phase thus correlate well with the voltage frequency so a covariance index is used to detect an islanding configuration. When this index exceeds a threshold a larger phase shift pattern is introduced in the output current large enough to cause the voltage frequency to fall outside the inverter™s trip protection window without compromising the inverter™s power quality yet ensuring reliable tripping of the inverter.

No. of Pages : 23 No. of Claims : 20

(12) PATENT APPLICATION PUBLICATION
(19) INDIA
(22) Date of filing of Application :10/09/2012
(21) Application No.7789/CHENP/2012 A
(43) Publication Date : 31/01/2014

(54) Title of the invention : METHOD AND APPARATUS FOR PROVIDING AN AUTHENTICATION CONTEXT-BASED SESSION

(51) International classification :H04L 29/06
(31) Priority Document No :12/707,097
(32) Priority Date :17/02/2010
(33) Name of priority country :U.S.A.
(86) International Application No :PCT/FI2011/050066
Filing Date :28/01/2011
(87) International Publication No : NA
(61) Patent of Addition to Application Number :NA
Filing Date :NA
(62) Divisional to Application Number :NA
Filing Date :NA

(71)**Name of Applicant :**
1)NOKIA CORPORATION
Address of Applicant :Keilalahdentie 4 FIN-02150 Espoo Finland
(72)**Name of Inventor :**
1)Jari Otranen
2)Lauri Tarkkala
3)Deepali Khushraj

(57) Abstract :
An approach is provided for providing separation of authentication protocols and/or authentication contexts for client-server and server-server communication in network communication. A proxy server receives a request to initiate a service session. The request includes a first authentication context. The proxy server request verification of the first authentication context from an authentication server and validates the first authentication context based, at least in part, on the verification. The proxy server implements a second authentication context based, at least in part, on the verification of the first authentication context to initiate the service session.

No. of Pages : 37 No. of Claims : 25

(12) PATENT APPLICATION PUBLICATION
(19) INDIA
(22) Date of filing of Application :17/09/2012
(21) Application No.7990/CHENP/2012 A
(43) Publication Date : 31/01/2014

(54) Title of the invention : EMPLOYMENT PORTAL ENABLING INTERACTIVE MOBILE CONTACT AND FEEDBACK

(51) International classification :G06Q10/00
(31) Priority Document No :12/656,995
(32) Priority Date :23/02/2010
(33) Name of priority country :U.S.A.
(86) International Application No :PCT/CA2011/000179
Filing Date :17/02/2011
(87) International Publication No : NA
(61) Patent of Addition to Application Number :NA
Filing Date :NA
(62) Divisional to Application Number :NA
Filing Date :NA

(71)**Name of Applicant :**
1)Rahman Nadimur
Address of Applicant :9220 Sanfrancisco Ave Brossard Quebec J4X 2N9 Canada
(72)**Name of Inventor :**
1)Rahman Nadimur

(57) Abstract :
The present invention relates to an enabled real time interaction between an employer and a job seeker. The job seeker submits resume information on a job portal and may enable a chat session option should an employer request one. The job seeker may download a chat client on his or her computer as well as a wireless mobile device. An employer that wants to contact a matched job seeker sends a chat request that activates the downloaded chat client on a computer or a mobile device of the job seeker without the job seeker logged on the website. The employer may be enabled to chat via a similar downloaded chat software module as the job seeker. The job seeker may be provided with job related feedback statistics before or after the application is made.

No. of Pages : 31 No. of Claims : 16

(12) PATENT APPLICATION PUBLICATION
(19) INDIA
(22) Date of filing of Application :04/09/2012
(21) Application No.7634/CHENP/2012 A
(43) Publication Date : 31/01/2014

(54) Title of the invention : ON-VEHICLE NITROGEN OXIDE AFTERTREATMENT SYSTEM

(51) International classification :F01N 3/10
(31) Priority Document No :61/305,272
(32) Priority Date :17/02/2010
(33) Name of priority country :U.S.A.
(86) International Application No :PCT/US2011/025043
Filing Date :16/02/2011
(87) International Publication No : NA
(61) Patent of Addition to Application Number :NA
Filing Date :NA
(62) Divisional to Application Number :NA
Filing Date :NA

(71)**Name of Applicant :**
1)TENNECO AUTOMOTIVE OPERATING COMPANY INC.
Address of Applicant :500 North Field Drive Lake Forest Illinois 60045 United States of America.
(72)**Name of Inventor :**
1)Gabriel SALANTA
2)Timothy JACKSON
3)Henry SULLIVAN
4)Adam J. KOTRBA

(57) Abstract :
An emissions system for reducing nitrogen oxides in engine exhaust includes an emissions catalyst having an inlet adapted to receive an exhaust from the engine. A fuel tank is adapted to provide fuel for combustion within the engine. A first injector is operable to inject fuel into the exhaust upstream of the catalyst. A second injector is operable to inject supplemental reductant from a supplemental reductant tank into the exhaust upstream of the catalyst. A controller is operable to control the first and second injectors and vary the supply of fuel and supplemental reductant into the exhaust to reduce nitrogen oxides within the exhaust.

No. of Pages : 20 No. of Claims : 19

(12) PATENT APPLICATION PUBLICATION
(19) INDIA
(22) Date of filing of Application :01/09/2012
(21) Application No.7635/CHENP/2012 A
(43) Publication Date : 31/01/2014

(54) Title of the invention : METHOD AND DEVICE FOR ADAPTIVE ADJUSTING UPLINK AND DOWNLINK BANDWIDTH

(51) International classification :H04L 12/56
(31) Priority Document No :201010220682.9
(32) Priority Date :28/06/2010
(33) Name of priority country :China
(86) International Application No :PCT/CN2010/078412
Filing Date :04/11/2010
(87) International Publication No : NA
(61) Patent of Addition to Application Number :NA
Filing Date :NA
(62) Divisional to Application Number :NA
Filing Date :NA

(71)**Name of Applicant :**
1)ZTE CORPORATION
Address of Applicant :ZTE Plaza Keji Road South Hi-Tech Industrial Park Nanshan District Shenzhen City Guangdong Province 518057 P. R. China China
(72)**Name of Inventor :**
1)LI Yan
2)PENG Aihua
3)ZHAO Nan
4)LI Feng

(57) Abstract :
The present invention discloses a method for adaptively adjusting uplink and downlink bandwidth, which includes: a base station counting a usage status of the uplink and downlink bandwidth in a preset time, and obtaining a bandwidth amount ΔBW DL required to be coordinated of downlink bandwidth and a bandwidth amount ΔBWUL required to be coordinated of uplink bandwidth; the base station determining a direction, amount and location of the required change of the uplink and downlink bandwidth according to the obtained ΔBW DL and ΔBWUL ; the base station carrying the determined direction, amount and location of the required change of the uplink and downlink bandwidth through residual ten bits in a logical channel message corresponding to a Physical Broadcast Channel (PBCH) and informing a terminal of the direction, amount and location. The present invention also discloses a device for adaptively adjusting the uplink and downlink bandwidth. With the present invention, utilization efficiency of frequency spectrum in a Long Term Evolution Frequency Division Duplex (LTE FDD) system is improved.

No. of Pages : 24 No. of Claims : 10

(12) PATENT APPLICATION PUBLICATION
(19) INDIA
(22) Date of filing of Application :04/09/2012
(21) Application No.7637/CHENP/2012 A
(43) Publication Date : 31/01/2014

(54) Title of the invention : A MEMORY CARD AND METHOD FOR SEARCHING WIRELESS NETWORK USING APPARATUS HAVING THE MEMORY CARD

(51) International classification :G06F 3/00
(31) Priority Document No :-
(32) Priority Date : -
(33) Name of priority country :Argentina
(86) International Application No :PCT/SG2008/000327
Filing Date :04/09/2008
(87) International Publication No : NA
(61) Patent of Addition to Application Number :NA
Filing Date :NA
(62) Divisional to Application Number :1786/CHENP/2010
Filed on :29/03/2010

(71)**Name of Applicant :**
1)T-Data Systems (S) Pte Ltd.
Address of Applicant :1 Palm Drive Singapore 456458 Singapore
(72)**Name of Inventor :**
1)Wayne Joon Yong TAN

(57) Abstract :
A memory card to be used in an apparatus having an inbuilt processor incapable of independently exporting digital data externally of the apparatus the digital data being captured by the apparatus the memory card comprising a central processor configured to control the export of data from the apparatus a storage module operably connected to the central processor and being configured to store the data to be exported and a wireless module configured to export the digital data from the storage module and being operably connected to one of: the central processor and the memory. A corresponding method is also disclosed

No. of Pages : 18 No. of Claims : 10

(12) PATENT APPLICATION PUBLICATION
(19) INDIA
(22) Date of filing of Application :27/07/2012
(21) Application No.848/KOL/2012 A
(43) Publication Date : 31/01/2014

(54) Title of the invention : A PORTABLE METAL TUBE FLARING DEVICE AND METHOD THEREOF

(51) International classification :B25B
(31) Priority Document No :NA
(32) Priority Date :NA
(33) Name of priority country :NA
(86) International Application No :NA
Filing Date :NA
(87) International Publication No : NA
(61) Patent of Addition to Application Number :NA
Filing Date :NA
(62) Divisional to Application Number :NA
Filing Date :NA

(71)**Name of Applicant :**
1)BHARAT HEAVY ELECTRICALS LIMITED
Address of Applicant :REGIONAL OPERATIONS DIVISION(ROD), PLOT NO:9/1, DJBLOCK 3RD FLOOR, KARUNAMOYEE,SALTLAKE CITY, KOLKATA-700091, HAVING ITS REGISTERED OFFICE AT BHEL HOUSE, SIRI FORT, NEW DELHI - 110049, INDIA.
(72)**Name of Inventor :**
1)VEERAIAH RAMESHKUMAR
2)SETHURAMAN PRABAKARAN
3)SADRAS PADMANABAN VIJAYKUMAR

(57) Abstract :
The invention relates to a device for portable incremental metal tube end flaring in straight end of tubes. To facilitate clamping, sets of clamp pads were used. A compact base plate was provided to house the powered cylinder and to facilitate axial movement of drift pins. The flaring set-up was coupled to the base plate so as to form a compact unit which can take care of the flaring reaction within itself. From the powered cylinder stroke, the power was transferred to the drift pin shaped like a cone. The invention further relates to a process of smooth and controlled flaring of tube with portable tube flaring unit, by suitable locking and positioning of tube.

No. of Pages : 9 No. of Claims : 6

(12) PATENT APPLICATION PUBLICATION
(19) INDIA
(22) Date of filing of Application :25/07/2013
(21) Application No.892/KOL/2013 A
(43) Publication Date : 31/01/2014

(54) Title of the invention : BICYCLE

(51) International classification :B62D 5/00
(31) Priority Document No :101127275
(32) Priority Date :27/07/2012
(33) Name of priority country :Taiwan
(86) International Application No :NA
Filing Date :NA
(87) International Publication No : NA
(61) Patent of Addition to Application Number :NA
Filing Date :NA
(62) Divisional to Application Number :NA
Filing Date :NA

(71)**Name of Applicant :**
1)CHUN-TI CHANG
Address of Applicant :NO.32, EAST LN. 267, SEC.2, TIANXIN RD., FENGYUAN DIST., TAICHUNG CITY, TAIWAN, POSTAL CODE: 420 Taiwan
2)YUNG-TAI CHANG
3)WAN-TAI CHANG
(72)**Name of Inventor :**
1)CHUN-TI CHANG
2)YUNG-TAI CHANG
3)WAN-TAI CHANG

(57) Abstract :
A bicycle includes a front wheel (13) that is driven rotatably by operation of a drive unit (2) connected thereto, and a rear folk (14) that is mounted with a rear wheel (15) and that is operable for steering the bicycle via a steering unit (4) and a transmission unit (5) that interconnects a handle (41) of the steering unit (4) and the rear wheel (15). Rotation of the handle (41) in a first rotational direction drives the rear folk (14) to rotate in a second rotational direction opposite to the first rotational direction via the transmission unit (5).

No. of Pages : 23 No. of Claims : 10

(12) PATENT APPLICATION PUBLICATION
(19) INDIA
(22) Date of filing of Application :13/05/2013
(21) Application No.538/KOL/2013 A
(43) Publication Date : 31/01/2014

(54) Title of the invention : METHOD AND SYSTEM FOR CONDUCTING VIDEO CONFERENCES OF DIVERSE PARTICIPATING DEVICES

(51) International classification	:H04L 12/00
(31) Priority Document No	:61/677,200
(32) Priority Date	:30/07/2012
(33) Name of priority country	:U.S.A.
(86) International Application No	:NA
Filing Date	:NA
(87) International Publication No	: NA
(61) Patent of Addition to Application Number	:NA
Filing Date	:NA
(62) Divisional to Application Number	:NA
Filing Date	:NA

(71)**Name of Applicant :**
1)POLYCOM, INC.
Address of Applicant :6001 AMERICA CENTER DRIVE, SAN JOSE, CALIFORNIA 95002 U.S.A.
(72)**Name of Inventor :**
1)HALAVY AVISHAY

(57) Abstract :
A novel universal bridge (UB) can handle and conduct multimedia multipoint conferences between a plurality of MREs and LEPs without using an MRM, an MCU and a gateway. Further, a UB can be configured to allocate and release resources dynamically according to the current needs of each conferee and the session.

No. of Pages : 66 No. of Claims : 45

(12) PATENT APPLICATION PUBLICATION
(19) INDIA
(22) Date of filing of Application :27/07/2012
(21) Application No.844/KOL/2012 A
(43) Publication Date : 31/01/2014

(54) Title of the invention : DOUBLE-LAYER NYLON ZIPPER

(51) International classification :a44b
(31) Priority Document No :NA
(32) Priority Date :NA
(33) Name of priority country :NA
(86) International Application No :NA
Filing Date :NA
(87) International Publication No : NA
(61) Patent of Addition to Application Number :NA
Filing Date :NA
(62) Divisional to Application Number :NA
Filing Date :NA

(71)**Name of Applicant :**
1)ROGER C. Y. CHUNG
Address of Applicant :2F, NO.1, ALLEY 3, LANE 106, LUNG-AN ROAD, HSINCHUANG DIST., NEW TAIPEI CITY 24257, TAIWAN
(72)**Name of Inventor :**
1)ROGER C. Y. CHUNG

(57) Abstract :
A double-layer nylon zipper includes two zipper tapes (1)eaeh having two series of teeth respectively disposed at opposing top and bottom sides of the fabric strip thereof, and a zipper slider (2) coupled between the interlocking series of teeth (12,12) of the two zipper tapes (l)and having opposing top guard frame wall (21) and bottom guard frame wall (22), a division wall (23) between the top and bottom guard frame walls (21,22), a nose (24) located on the top guard frame wall (21) and a pull tap (25) coupled to the nose (24). The top guard frame wall (21) and bottom guard frame wall (22) have respective first ends (211,221) kept in flush and respective second ends (212,222) in different lengths so that an accommodation space (26) is defined right below the second end (212) of the top guard frame wall (21) outside the second end (222) of the bottom guard frame wall (22) to facilitate smooth interlocking of the interlocking series of teeth (12,12).

No. of Pages : 23 No. of Claims : 8

(12) PATENT APPLICATION PUBLICATION
(19) INDIA
(22) Date of filing of Application :27/07/2012
(21) Application No.845/KOL/2012 A
(43) Publication Date : 31/01/2014

(54) Title of the invention : A SHEAR ENHANCED MEMBRANE MODULE WITH INBUILT SELF CLEANING MECHANISM

(51) International classification :B01D
(31) Priority Document No :NA
(32) Priority Date :NA
(33) Name of priority country :NA
(86) International Application No :NA
Filing Date :NA
(87) International Publication No : NA
(61) Patent of Addition to Application Number :NA
Filing Date :NA
(62) Divisional to Application Number :NA
Filing Date :NA

(71)**Name of Applicant :**
1)SARKAR, DEBASISH
Address of Applicant :ASSISTANT PROFESSOR, DEPARTMENT OF CHEMICAL ENGINEERING, UNIVERSITY OF CALCUTTA, KOLKATA-700 009, WEST BENGAL, INDIA.
2)BHATTACHARJEE, PROF. CHIRANJIB
3)SARKAR, ANKUR
(72)**Name of Inventor :**
1)SARKAR, DEBASISH
2)BHATTACHARJEE, PROF. CHIRANJIB
3)SARKAR, ANKUR

(57) Abstract :
A dynamic high shear membrane module having a self cleaning mechanism is disclosed. The module consists of a hollow basket with four radial arms, fitted with four flat membranes on alternate sides of adjacent radial arms, and was mounted on a central hollow shaft fitted with a pulley drive. The whole system with suitable sealing arrangement was placed in a stainless steel cylindrical tank fed by a triplex piston pump. The invention relates particularly to a new shear enhanced membrane module, named as Spinning Basket Membrane (SBM) module with a unique hydrodynamic self cleaning facility to make the process continuous without any intermediate cleaning of membranes using chemicals. The shear enhanced membrane module for the invention and its method of operation would thus have wide scale application in dairy and food industry or in any effluent treatment plant.

No. of Pages : 22 No. of Claims : 12

(12) PATENT APPLICATION PUBLICATION
(19) INDIA
(22) Date of filing of Application :08/02/2010
(21) Application No.109/KOL/2010 A
(43) Publication Date : 31/01/2014

(54) Title of the invention : AN IMPROVED METHOD FOR MSK AND MSK-CDMA DEMODULATION AND THE DEMODULATOR THEREOF

(51) International classification :H04B1/69
(31) Priority Document No :NA
(32) Priority Date :NA
(33) Name of priority country :NA
(86) International Application No :NA
Filing Date :NA
(87) International Publication No : NA
(61) Patent of Addition to Application Number :NA
Filing Date :NA
(62) Divisional to Application Number :NA
Filing Date :NA

(71)**Name of Applicant :**
1)AMIT KUMAR DUTTA
Address of Applicant :19, NAINEN PARA LANE, KOLKATA-700 036, WEST BENGAL, INDIA
(72)**Name of Inventor :**
1)AMIT KUMAR DUTTA

(57) Abstract :
The present invention relates to An improved method for MSK-CDMA demodulation comprising the steps of determining the error rate for the different combinations of the input bit pairs; choosing the bit pair with minimum error possible for transmitted bits by coherent demodulation; performing the least square solution by squaring the error and differentiating it with respect to different variables of the received signal; and equating out the coefficient of the bit error rate and an optimum receiver configured for MSK-CDMA demodulation to carry out the said method.

No. of Pages : 14 No. of Claims : 10

(12) PATENT APPLICATION PUBLICATION
(19) INDIA
(22) Date of filing of Application :25/07/2012
(21) Application No.835/KOL/2012 A
(43) Publication Date : 31/01/2014

(54) Title of the invention : REINFORCEMENT STRUCTURE AND REINFORCEMENT METHOD FOR UNDER WATER STRUCTURE

(51) International classification :E02D
(31) Priority Document No :NA
(32) Priority Date :NA
(33) Name of priority country :NA
(86) International Application No :NA
Filing Date :NA
(87) International Publication No : NA
(61) Patent of Addition to Application Number :NA
Filing Date :NA
(62) Divisional to Application Number :NA
Filing Date :NA

(71)**Name of Applicant :**
1)JFE STEEL CORPORATION
Address of Applicant :2-3, UCHISAIWAI-CHO 2-CHOME, CHIYODA-KU, TOKYO 100-0011 JAPAN
(72)**Name of Inventor :**
1)OKA, YOSHITAKE

(57) Abstract :
A reinforcement structure and a reinforcement method for an underwater structure are provided. In a reinforcement structure (D) of an underwater structure, a gap (7) between a steel pipe pile (1) and casing pipes (4) and (5) is filled with a grout material (8) in a state where the steel pipe pile (1) is inserted into the casing pipes (4) and (5), thereby joining a horizontal brace member (2) and an inclined brace member (3) to the steel pipe pile (1).

No. of Pages : 41 No. of Claims : 9

(12) PATENT APPLICATION PUBLICATION
(19) INDIA
(22) Date of filing of Application :27/07/2012
(21) Application No.851/KOL/2012 A
(43) Publication Date : 31/01/2014

(54) Title of the invention : A FIXTURE FOR MAKING SMALL FILLERS ADAPTED IN THE MANUFACTURING OF ROTOR COILS OF 600 MW TURBO GENERATOR SETS AND THE METHOD OF MAKING THE SAME ON A MILLING

(51) International classification :H02K
(31) Priority Document No :NA
(32) Priority Date :NA
(33) Name of priority country :NA
(86) International Application No :NA
Filing Date :NA
(87) International Publication No : NA
(61) Patent of Addition to Application Number :NA
Filing Date :NA
(62) Divisional to Application Number :NA
Filing Date :NA

(71)**Name of Applicant :**
1)BHARAT HEAVY ELECTRICALS LIMITED
Address of Applicant :REGIONAL OPERATIONS DIVISION(ROD), PLOT NO:9/1, DJ BLOCK 3RD FLOOR, KARUNAMOYEE,SALTLAKE CITY, KOLKATA-700091, HAVING ITS REGISTERED OFFICE AT BHEL HOUSE, SIRI FORT, NEW DELHI - 110049, INDIA.
(72)**Name of Inventor :**
1)ASHWANI KUMAR SHARMA
2)YOGESH KUMAR

(57) Abstract :
A fixture for making small fillers adapted in the manufacturing of Rotor Coils of 600 MW turbo generator sets consists of a block having a plurality of slots for accommodating the slitting cutters mounted on the machine for cutting the filler rods on one side of the block, a locking plate is fixed to act as a stopper plate for maintaining the required length of the filler rod. A parallel plate is disposed beneath the filler rod during clamping of the filler rod in a vice.

No. of Pages : 12 No. of Claims : 5

(12) PATENT APPLICATION PUBLICATION
(19) INDIA
(22) Date of filing of Application :22/07/2013
(21) Application No.869/KOL/2013 A
(43) Publication Date : 31/01/2014

(54) Title of the invention : TOOL HOLDER FOR RECEIVING AND LOCKING A TOOL TAPER ON A TOOL MAGAZINE, UNLOCKING DEVICE AND TOOL MAGAZINE

(51) International classification :B23Q 3/00
(31) Priority Document No :10 2012 213 207.4
(32) Priority Date :26/07/2012
(33) Name of priority country :Germany
(86) International Application No :NA
Filing Date :NA
(87) International Publication No : NA
(61) Patent of Addition to Application Number :NA
Filing Date :NA
(62) Divisional to Application Number :NA
Filing Date :NA

(71)**Name of Applicant :**
1)DECKEL MAHO PFRONTEN GMBH
Address of Applicant :DECKEL MAHO-STRASSE 1, 87459 PFRONTEN, GERMANY
(72)**Name of Inventor :**
1)LECHLEITER, KARL
2)MAYR, MATTHIAS
3)TRENKLE, MICHAEL

(57) Abstract :
The present invention relates to a tool holder 6 to receive and lock a tool taper 8 on a tool maga zine, an unlocking device 7 to unlock a tool taper 8, which is received and is locked in a tool holder 6 of this type, and a tool magazine for a machine tool comprising one or more tool holders of this type and an unlocking device of this type.

No. of Pages : 42 No. of Claims : 18

(12) PATENT APPLICATION PUBLICATION
(19) INDIA
(22) Date of filing of Application :04/11/2011
(21) Application No.1425/KOL/2011 A
(43) Publication Date : 31/01/2014

(54) Title of the invention : A 6DOF PLATFORM FOR MICROMANIPULATION WITH PIEZOELECTRIC ACTUATORS AND COMPLIANT MECHANISM

(51) International classification :B25J7/00
(31) Priority Document No :NA
(32) Priority Date :NA
(33) Name of priority country :NA
(86) International Application No :NA
Filing Date :NA
(87) International Publication No : NA
(61) Patent of Addition to Application Number :NA
Filing Date :NA
(62) Divisional to Application Number :NA
Filing Date :NA

(71)**Name of Applicant :**
1)INDIAN INSTITUTE OF TECHNOLOGY, KHARAGPUR
Address of Applicant :SPONSORED RESEARCH & INDUSTRIAL CONSULTANCY, INDIAN INSTITUTE OF TECHNOLOGY, KHARAGPUR-721302, WEST BENGAL, INDIA
(72)**Name of Inventor :**
1)KUMAR, CHERUVU SIVA
2)VIRANI, NURALI NIZAR

(57) Abstract :
The present invention relates to Stewart Platform based manipulator systems in robotic application and more particularly, is directed to workspace enhancement for Stewart Platform such as providing 6DOF platform for micromanipulation with piezoelectric actuators and compliant mechanism. Importantly, workspace enhancement in the Stewart Platform of the invention is provided for increasing the effective range of the links. The invention would thus enable increasing the effective workspace by almost 1000 times, for a gain factor of 10, compared to the conventional Stewart Platform with compliant mechanism and piezoelectric actuators. Moreover, the Stewart platform of the invention is scalable in the sense, a user can demand the limit on workspace based on which the specific gain factor can be computed and the robot can be constructed accordingly. The platform according to the invention is thus capable of wide scale application and use in laboratories, industries needing micromanipulation platform for research and study of control theory, or in high end microscopes or for precision alignment or micro-positioning as manipulation platform for Electron beam machining/Ion beam machining, precise alignments in robots with task of autonomous assembly.

No. of Pages : 11 No. of Claims : 10

(12) PATENT APPLICATION PUBLICATION
(19) INDIA
(22) Date of filing of Application :22/07/2013
(21) Application No.867/KOL/2013 A
(43) Publication Date : 31/01/2014

(54) Title of the invention : POWER CONVERTER

(51) International classification	:H02M 3/00
(31) Priority Document No	:2012-166878
(32) Priority Date	:27/07/2012
(33) Name of priority country	:Japan
(86) International Application No	:NA
Filing Date	:NA
(87) International Publication No	: NA
(61) Patent of Addition to Application Number	:NA
Filing Date	:NA
(62) Divisional to Application Number	:NA
Filing Date	:NA

(71)**Name of Applicant :**
1)DAIKIN INDUSTRIES, LTD,
Address of Applicant :UMEDA CENTER BUILDING, 4-12, NAKAZAKI-NISHI 2-CHOME, KITA-KU, OSAKA-SHI, OSAKA 530-8323, JAPAN
(72)**Name of Inventor :**
1)TOMOISA TANIGUCHI
2)MORIMITSU SEKIMOTO
3)NOBUYOSHI TAKATA

(57) Abstract :
[Purpose] In a power converter having a protection function against overvoltage, both protection against overvoltage and automatic restart can be achieved. [Solution] Components of a power converter are divided into components in a first circuit section (2) and components in a second circuit section (3). When the second circuit section (3) starts its operation, a first control section (15) in the first circuit section (2) closes a switch (SW1) to start a power supply to the second circuit section (3). When the voltage of the power supply (1) exceeds a first predetermined value, the switch (SW1) is opened to stop the power supply to the second circuit section (3). Then, after the voltage of the power supply (1) has decreased below a second predetermined value lower than the first predetermined value, the first control section (15) closes the switch (SW1) to start the power supply to the second circuit section (3).

No. of Pages : 24 No. of Claims : 7

(12) PATENT APPLICATION PUBLICATION
(19) INDIA
(22) Date of filing of Application :30/07/2012
(21) Application No.856/KOL/2012 A
(43) Publication Date : 31/01/2014

(54) Title of the invention : 'A PROCESS FOR PRODUCING ALUMINA GRINDING MEDIA BALLS FOR COAL PULVERIZATION IN THERMAL POWER STATION'

(51) International classification :C04B
(31) Priority Document No :NA
(32) Priority Date :NA
(33) Name of priority country :NA
(86) International Application No :NA
Filing Date :NA
(87) International Publication No : NA
(61) Patent of Addition to Application Number :NA
Filing Date :NA
(62) Divisional to Application Number :NA
Filing Date :NA

(71)**Name of Applicant :**
1)BHARAT HEAVY ELECTRICALS LIMITED
Address of Applicant :REGIONAL OPERATIONS DIVISION(ROD), PLOT NO:9/1, DJBLOCK 3RD FLOOR, KARUNAMOYEE,SALTLAKE CITY, KOLKATA-700091, HAVING ITS REGISTERED OFFICE AT BHEL HOUSE, SIRI FORT, NEW DELHI - 110049, INDIA.
(72)**Name of Inventor :**
1)HARISHANKER
2)DR LAKSHMI NARAYAN SATAPATHY
3)JOHN BOSCO ABRAHAM

(57) Abstract :
The invention relates to a process for producing high impact resistant ceramic balls which are suitable for coal pulverization in thermal power stations. The process is based on the application of equal hydrostatic pressure technology which is capable of developing maximum fluid pressure of 1000 Kgs/cm2 and producing balls with a minimum output of 60-120 balls /h preferably 80-100 balls /h of sizes in the range of 20 -80 mm in diameter preferably in 30-50 mm diameter range. The mold design plays an important role to produce defect free components. The balls having nominal composition of alumina content of exceeding 95 % and with other additives were fired at 1570-1650 °C preferably in the range of 1580-1620 °C both in pure microwave kiln and in gas fired batch kiln. The balls produced are having green density >2.30 g/cc, Fired bulk density >3.76 g/cc with <0.1 %, water absorption. The balls are having micro-hardness 13 GPa, fracture toughness of > 4.2 MPa m1/2 volume loss of < 3.0 mm3. Most significant result of the balls is the impact resistance withstanding capability of ball exceeding 8,000 impacts. The balls produced in this development will be used for grinding coal in thermal power station promising huge savings in electrical energy due to low density and high abrasion resistance of these products. These balls also can be used in other industries for low abrasion and high grinding efficiency.

No. of Pages : 21 No. of Claims : 8

(12) PATENT APPLICATION PUBLICATION
(19) INDIA
(22) Date of filing of Application :30/07/2012
(21) Application No.857/KOL/2012 A
(43) Publication Date : 31/01/2014

(54) Title of the invention : A DEVICE FOR ALIGNING THE INNER AND OUTER CASING FOR HP/IP MODULE STEAM TURBINE

(51) International classification :F01D
(31) Priority Document No :NA
(32) Priority Date :NA
(33) Name of priority country :NA
(86) International Application No :NA
Filing Date :NA
(87) International Publication No : NA
(61) Patent of Addition to Application Number :NA
Filing Date :NA
(62) Divisional to Application Number :NA
Filing Date :NA

(71)**Name of Applicant :**
1)BHARAT HEAVY ELECTRICALS LIMITED
Address of Applicant :REGIONAL OPERATIONS DIVISION(ROD), PLOT NO:9/1, DJBLOCK 3RD FLOOR, KARUNAMOYEE,SALTLAKE CITY, KOLKATA-700091, HAVING ITS REGISTERED OFFICE AT BHEL HOUSE, SIRI FORT, NEW DELHI - 110049, INDIA.
(72)**Name of Inventor :**
1)NILAMADHAB SAHU
2)DIBYA SINHA SARKAR

(57) Abstract :
The invention relates to a device and method for aligning the Inner casing with respect to Outer casing for HP/IP module steam turbine where there exists a close dimensional clearance between the blades and outer casing. The device comprising a block body (2), supported between an eccentric bolt (7) and holding plate (3), the holding plate (3) suspended from outer casing (8), the block body (2) having plurality of teeths (2c) which fit into grove (7a) of the eccentric bolt (7) such that a forged spanner (4) rotates the block body (2) which in turn transmit the rotation to inner casing (9) via eccentric bolt (7) and fitted key (10) thus aligning the inner casing (9) with respect to outer casing (8).

No. of Pages : 13 No. of Claims : 5

(12) PATENT APPLICATION PUBLICATION
(19) INDIA
(22) Date of filing of Application :24/07/2013
(21) Application No.885/KOL/2013 A
(43) Publication Date : 31/01/2014

(54) Title of the invention : CONSUMABLE ELECTRODE ARC WELDING METHOD

(51) International classification :B23K 9/00
(31) Priority Document No :2012-168004
(32) Priority Date :30/07/2012
(33) Name of priority country :Japan
(86) International Application No :NA
Filing Date :NA
(87) International Publication No : NA
(61) Patent of Addition to Application Number :NA
Filing Date :NA
(62) Divisional to Application Number :NA
Filing Date :NA

(71)**Name of Applicant :**
1)DAIHEN CORPORATION
Address of Applicant :2-1-11, TAGAWA, YODOGAWA-KU, OSAKA-SHI, OSAKA 532-8512 JAPAN
(72)**Name of Inventor :**
1)TAKADA KENTO
2)NAKAMATA TOSHIAKI

(57) Abstract :
A consumable electrode arc welding method includes the detecting of a constriction formed in a molten droplet of the welding wire so as to reduce the welding current, the detecting of a smoothed value of the welding current, and the feedback controlling of the feed rate of the welding wire so as to make the smoothed value of the welding current correspond to a predetermined current setting value. The constriction detection is performed repetitively in a predetermined cycle.In each time of the repetition, the length of a constriction time, from the constriction detection till the arc generation,is measured. The number of constriction time lengths falling outside a predetermined range is counted. When the counted number is not less than a reference number, the transient response time of the feedback control is made longer.

No. of Pages : 27 No. of Claims : 3

(12) PATENT APPLICATION PUBLICATION
(19) INDIA
(22) Date of filing of Application :27/07/2012
(21) Application No.849/KOL/2012 A
(43) Publication Date : 31/01/2014

(54) Title of the invention : A MEASURING DEVICE FOR MEASUREMENT OF 'V'-GROOVE WALL THICKNESS OF IMPELLER DISC OF COMPRESSOR BY MODIFICATION OF A VERNIER CALIPER

(51) International classification :G01B
(31) Priority Document No :NA
(32) Priority Date :NA
(33) Name of priority country :NA
(86) International Application No :NA
Filing Date :NA
(87) International Publication No : NA
(61) Patent of Addition to Application Number :NA
Filing Date :NA
(62) Divisional to Application Number :NA
Filing Date :NA

(71)**Name of Applicant :**
1)BHARAT HEAVY ELECTRICALS LIMITED
Address of Applicant :REGIONAL OPERATIONS DIVISION(ROD), PLOT NO:9/1, DJBLOCK 3RD FLOOR, KARUNAMOYEE,SALTLAKE CITY, KOLKATA-700091, HAVING ITS REGISTERED OFFICE AT BHEL HOUSE, SIRI FORT, NEW DELHI - 110049, INDIA.
(72)**Name of Inventor :**
1)PANDI SOMAIAH

(57) Abstract :
A measuring device for measurement of V groove wall thickness of impeller disc of compressor comprises of a vernier scale of a old vernier caliper having the two original jaws welded with 12 mm square rod of 100 mm length for making an extended jaw when an anvil and a spindle is brazed to the jaws to facilitate the measurement. Out of two jaws, one is a fixed jaw and other is moveable.

No. of Pages : 12 No. of Claims : 3

(12) PATENT APPLICATION PUBLICATION
(19) INDIA
(22) Date of filing of Application :24/09/2009
(21) Application No.3395/KOLNP/2009 A
(43) Publication Date : 31/01/2014

(54) Title of the invention : INFORMATION STORAGE MEDIUM STORING TEXT-BASED SUBTITLE, AND APPARATUS AND METHOD FOR PROCESSING TEXT-BASED SUBTITLE

(51) International classification :G11B20/10
(31) Priority Document No :10-2003-0069023
(32) Priority Date :04/10/2003
(33) Name of priority country :Republic of Korea
(86) International Application No :PCT/KR2004/002504
Filing Date :30/09/2004
(87) International Publication No : NA
(61) Patent of Addition to Application Number :NA
Filing Date :NA
(62) Divisional to Application Number :766/KOLNP/2006
Filed on :30/03/2006

(71)**Name of Applicant :**
1)SAMSUNG ELECTRONICS CO. LTD.
Address of Applicant :416 Maetan-dong Yeongtong-gu Suwon-si Gyeonggi-do 442-742 Republic of Korea
(72)**Name of Inventor :**
1)KANG Man-Seok
2)MOON Seong-Jin
3)JUNG Kil-Soo
4)PARK Sung-Wook
5)CHUNG Hyun-Kwon

(57) Abstract :
An information storage medium storing subtitle text-based information, and a method and apparatus utilizing same, process a subtitle The information storage medium includes: dialog information which contains script text information of the subtitle and information specifying an output type of the script text; and presentation information which contains style information used to convert the script text into a bitmap format through rendering. With this structure, the amount of data required for a subtitle and the amount of data that should be processed when a subtitle is output may be greatly reduced.

No. of Pages : 31 No. of Claims : 5

(12) PATENT APPLICATION PUBLICATION
(19) INDIA
(22) Date of filing of Application :30/07/2012
(21) Application No.853/KOL/2012 A
(43) Publication Date : 31/01/2014

(54) Title of the invention : MICRO PARTICLES

(51) International classification :A61K
(31) Priority Document No :NA
(32) Priority Date :NA
(33) Name of priority country :NA
(86) International Application No :NA
Filing Date :NA
(87) International Publication No : NA
(61) Patent of Addition to Application Number :NA
Filing Date :NA
(62) Divisional to Application Number :NA
Filing Date :NA

(71)**Name of Applicant :**
1)UNIVERSITY OF CALCUTTA
Address of Applicant :SENATE HOUSE, 87/1 COLLEGE STREET, KOLKATA 700073, WEST BENGAL, INDIA.
(72)**Name of Inventor :**
1)DASGUPTA ANJAN KR.
2)SARKAR SOUNIK

(57) Abstract :
A bio-synthetic method for the preparation of micro-particles; said method comprising the following steps: - preparing a cell-preparation containing isolated cells comprising isolated cells, a medium and at least one excipient; - preparing a drug solution in a solvent by dissolving at least one drug, optionally with a labeling agent; - mixing the cell-preparation with the drug solution to obtain a mixture; and - stirring the mixture at 200 to 2000 rpm for a time period ranging between 1 min 15 min to obtain a micro-particle containing fraction.

No. of Pages : 27 No. of Claims : 11

(12) PATENT APPLICATION PUBLICATION
(19) INDIA
(22) Date of filing of Application :30/07/2012
(21) Application No.854/KOL/2012 A
(43) Publication Date : 31/01/2014

(54) Title of the invention : UNIQUE MODEL OF LOCK-GATE SYSTEM FOR WATER HARVESTING

(51) International classification :A01B
(31) Priority Document No :NA
(32) Priority Date :NA
(33) Name of priority country :NA
(86) International Application No :NA
Filing Date :NA
(87) International Publication No : NA
(61) Patent of Addition to Application Number :NA
Filing Date :NA
(62) Divisional to Application Number :NA
Filing Date :NA

(71)**Name of Applicant :**
1)SRI KAJAL MONDAL
Address of Applicant :VILL.: BELSARA, P.O.: PERUA GOPALPUR, DIST.: BIRBHUM, PIN- 731123 West Bengal India
(72)**Name of Inventor :**
1)SRI KAJAL MONDAL

(57) Abstract :
To benefit the villagers by water harvesting with a simple technology for agricultural output with income index level high and to restore the fishes of the pond to have economic gain. Water resource being main resource of agricultural land and rain water be harvested with a systematic planning and to keep the ponds intact with the fish resource not disturbing, then it will benefit both owner of the pond and the farmer of the agricultural land. This is a lock gate system having three holes. The three holes are made within the concrete structure of the gate, each one will have its distance of 1 foot. The holes are closed by mud and may open according to the depth of the water and thus to stop the passage of fishes going out of the pond will be full of fishes and water will be flowed according to its depth just by opening the passage through the hole and to stop the hole.

No. of Pages : 6 No. of Claims : 1

PUBLICATION U/S.60 IN RESPECT OF APPLICATION FOR RESTORATION OF PATENTS

Notice is hereby given that application for restoration of under mentioned Patents have been allowed and said Patents are restored.

Sl.No.	Appln. No.	Patent No.	Applicants	Title	Date of Publication U/R.84(3)	Appropriate Office
1.	IN/PCT/2001/460/KOL	201712	TEIJIN SEIKI CO.LTD.	Threading apparatus and threading method in textile machine	12.06.2009	Kolkata

Publication Under Section 43(2) in Respect of the Grant

Following Patents have been granted and any person interested in opposing these patents under Section 25(2) may at any time within one year from the date of this issue, give notice to the Controller of Patents at the appropriate office, on the prescribed form-7 along with written statement and evidence, if any.

Serial Number	Patent Number	Application Number	Date of Application	Date of Priority	Title of Invention	Name of Patentee	Date of Publication of Abstract u/s 11(A)	Appropriate Office
1	190034	118/DEL/1998	16/01/1998		WATERPROFING WOOD PERSERVATIVE COMPOSITIONS	LONZA, INC.	03/06/2005	DELHI
2	258615	1612/DELNP/2007	24/08/2005	24/08/2004	SYSTEM AND METHOD FOR TRANSMITTING GRAPHICS DATA IN A PUSH-TO TALK SYSTEM	QUALCOMM INCORPORATED	03/08/2007	DELHI
3	258619	2185/DELNP/2006	03/11/2004	03/11/2003	A STOPPER ROD SYSTEM FOR USE IN A METALLURGICAL VESSEL	VESUVIUS CRUCIBLE COMPANY	15/06/2007	DELHI
4	258621	2703/DEL/2005	03/03/1998	04/03/1997	VALUE AND SECURITY PRODUCT WITH LUMINESCENT SAFETY ELEMENT AND PROCESS FOR THE MANUFACTURE THEREOF AND ARRANGEMENT FOR CHECKING THE AUTHENTICITY VISUALLY AND BY MACHINE	BUNDESDRUCKEREI GMBH	24/08/2007	DELHI
5	258627	6199/DELNP/2007	02/03/2005	02/03/2005	'PIPE REACTOR AND PLANT FOR MANUFACTURING OF ESPECIALLY UREA AMMONIUM SULPHATE	YARA INTERNATIONAL ASA	31/08/2007	DELHI
6	258634	6074/DELNP/2008	22/02/2007	24/02/2006	SINTERED CERAMIC, SLIDE PART THEREFROM, AND PROCESS FOR PRODUCING SINTERED CERAMIC	HITACHI CHEMICAL COMPANY, LTD	26/09/2008	DELHI
7	258636	2762/DELNP/2007	19/10/2005	20/10/2004	NOVEL 3-ARYLAMINO PYRIDINE DERIVATIVES	APPLIED RESEARCH SYSTEMS ARS HOLDING N.V.	03/08/2007	DELHI
8	258637	1255/DEL/2007	12/06/2007	21/06/2006	FEMALE TERMINAL FITTING	SUMITOMO WIRING SYSTEMS, LTD.	04/01/2008	DELHI
9	258646	1366/DEL/2007	26/06/2007 10:43:01		A NON-INVASIVE DNA ISOLATION METHODOLOGY IN DAIRY ANIMALS	NATIONAL RESEARCH DEVELOPMENT CORPORATION	16/01/2009	DELHI
10	258649	2464/DELNP/2007	03/09/2005	03/09/2004	PYRROLO[3,2-C] PYRIDINE DERIVATIVE OF FORMULA (1) AND PROCESSES FOR THE PREPARATION THEREOF	YUHAN CORPORATION	03/08/2007	DELHI

11	258650	1540/DEL/2007	20/07/2007 16:01:10	21/07/2006	METHOD AND SYSTEM FOR DETECTING DATA CONGESTION AND APPLYING A CELL RESELECTION OFFSET	RESEARCH IN MOTION LIMITED	25/01/2008	DELHI
12	258654	6132/DELNP/2006	26/04/2005	27/04/2004	INTERFACE ADAPTER MODULE.	TYCO ELECTRONICS CORPORATION	17/08/2007	DELHI
13	258655	9669/DELNP/2008	27/04/2007	23/06/2006	A POST - POLYMERIZATION PROCESS FOR SEPARATING A HYDROCARBON-RUBBER FROM A POLYMER SLURRY	EXXONMOBIL CHEMICAL PATENTS, INC.	27/03/2009	DELHI
14	258656	6840/DELNP/2006	29/04/2005	03/05/2004	HANDLING OF IDENTITIES IN A TRUST DOMAIN OF AN NETWORK	NOKIA CORPORATION	31/08/2007	DELHI
15	258663	788/DEL/2006	22/03/2006 12:16:40		A NOVEL SOLID SEPARATOR	COUNCIL OF SCIENTIFIC & INDUSTRIAL RESEARCH	30/03/2012	DELHI
16	258665	7225/DELNP/2008	15/01/2007	24/02/2006	AN IRON ALLOY THERMOELECTRIC MATERIAL	YANMAR CO.,LTD	26/09/2008	DELHI
17	258667	4069/DELNP/2007	09/12/2005	15/12/2004	'PROCESS FOR PREPARING PURIFIED TEREPHTHALIC ACID'	SAUDI BASIC INDUSTRIES CORPORATION.	24/08/2007	DELHI

Publication Under Section 43(2) in Respect of the Grant

Following Patents have been granted and any person interested in opposing these patents under Section 25(2) may at any time within one year from the date of this issue, give notice to the Controller of Patents at the appropriate office, on the prescribed form-7 along with written statement and evidence, if any.

Serial Number	Patent Number	Application Number	Date of Application	Date of Priority	Title of Invention	Name of Patentee	Date of Publication of Abstract u/s 11(A)	Appropriate Office
1	258612	703/MUMNP/2008	14/08/2006	06/10/2005	A SECTION INSULATOR WITH NEUTRAL SECTION FOR RIGID CATENARY	METRO DE MADRID, S. A.	02/05/2008	MUMBAI
2	258618	559/MUM/2008	19/03/2008 12:12:13	23/03/2007	BROADCASTING RECEIVING APPARUTUS, AND METHOD FOR EXECUTING APLLICATIONS IN BROADCASTING RECEVING APPRATUS	SAMSUNG ELECTRONICS CO., LTD.	20/08/2010	MUMBAI
3	258630	921/MUMNP/2008	21/11/2006	28/11/2005	A CONNECTION FOR THE TORQUE TRANSMITTING CONNECTION OF A HOLLOW SHAFT	ZF FRIEDRICHSHAFEN AG	27/06/2008	MUMBAI
4	258631	1941/MUM/2006	24/11/2006		DEVICE FOR PUMPING FLUIDS FROM SUMPS	KIRLOSKAR BROTHERS LIMITED	04/01/2008	MUMBAI
5	258642	1565/MUMNP/2007	17/03/2006	18/03/2005	DYNAMIC SPACE-TIME CODING FOR A COMMUNICATION SYSTEM	QUALCOMM INCORPORATED	02/11/2007	MUMBAI
6	258644	412/MUMNP/2008	29/08/2006	05/09/2005	MARTENSITE BASED STAINLESS STEEL SHEET FOR HEAT RESISTANT DISK BRAKE EXCHELLENT IN HARDENABILITY	NIPPON STEEL & SUMIKIN STAINLESS STEEL CORPORATION	21/03/2008	MUMBAI
7	258648	449/MUMNP/2008	12/09/2006	26/09/2005	METHOD OF CONTROLLING A BROWSER WINDOW	KONINKLIJKE KPN N. V.	04/04/2008	MUMBAI
8	258662	1497/MUMNP/2008	09/02/2007	10/02/2006	PROCESS AND APPARATUS FOR THE COMBUSTION OF SULFUR	OUTOTEC OYJ	17/10/2008	MUMBAI

Publication Under Section 43(2) in Respect of the Grant

Following Patents have been granted and any person interested in opposing these patents under Section 25(2) may at any time within one year from the date of this issue, give notice to the Controller of Patents at the appropriate office, on the prescribed form-7 along with written statement and evidence, if any.

Serial Number	Patent Number	Application Number	Date of Application	Date of Priority	Title of Invention	Name of Patentee	Date of Publication of Abstract u/s 11(A)	Appropriate Office
1	258613	1632/CHENP/2007	13/10/2005	21/10/2004	A POLYURETHANE ELASTOMER OF HIGH CLARITY	DOW GLOBAL TECHNOLOGIES , LLC	31/08/2007	CHENNAI
2	258614	2948/CHENP/2008	14/12/2006	22/12/2005	PROCESS FOR THE PREPARATION OF IRREGULARLY SHAPED NON-SPHERICAL SUPPORTED CATALYST	INSTITUT FRANCAIS DU PETROLE	06/03/2009	CHENNAI
3	258624	2790/CHENP/2006	28/01/2004	28/01/2004	A METHOD FOR TRANSFORMING A HETEROGENEOUS COMPOUND DOCUMENT	SANKHYA TECHNOLOGIES PRIVATE LIMITED	08/06/2007	CHENNAI
4	258625	2191/CHENP/2007	18/11/2005	19/11/2004	REACTOR AND METHOD FOR REACTING AT LEAST TWO GASES IN THE PRESENCE OF A LIQUID PHASE	SOLVAY (SOCIETE ANONYME)	07/09/2007	CHENNAI
5	258626	549/CHENP/2008	22/05/2006	03/08/2005	OZONE GENERATOR	DEGREMONT S.A	19/09/2008	CHENNAI
6	258628	2108/CHENP/2007	11/11/2005	16/11/2004	DEVICE AND METHOD FOR DETERMINING MATERIAL PROPERTIES BY MEANS OF HPLC	JOINT ANALYTICAL SYSTEMS GmbH	07/09/2007	CHENNAI
7	258629	2426/CHENP/2007	11/11/2005	06/12/2004	A PROCESS AND THE PRODUCTION UNIT FOR PRODUCING AN AQUEOUS SOLUTION COMPRISING CHLORINE DIOXIDE	AKZO NOBEL N.V.	07/09/2007	CHENNAI
8	258635	5155/CHENP/2007	13/04/2006	15/04/2005	METHOD FOR TREATING A LAUNDRY ITEM	RECKITT BENCKISER N.V	27/06/2008	CHENNAI
9	258640	873/CHE/2004	30/08/2004		DOUBLE VALVE CONSTRUCTED FROM UNITARY SINGLE VALVES	Ross Operating Valve Company	04/03/2005	CHENNAI
10	258641	1016/CHE/2006	12/06/2006 15:25:56		A GEAR SHIFT SYSTEM FOR QUICKER START OF DIESEL ENGINE BY INCREASING THE RATE OF RAIL PRESSURE IN THE COMMON RAIL SYSTEM	Robert Bosch India Limited	21/12/2007	CHENNAI

11	258645	2256/CHE/2007	08/10/2007		AUTOMATIC SIDE STAND RELIEVER SYSTEM	SENTHILKUMAR DURAISAMY,NAGENDRA N ARUMUGAM,RAVI SUBRAMANIAM	02/11/2007	CHENNAI
12	258647	709/CHE/2005	09/06/2005		FUEL MONITORING SYSTEM FOR MOTOR VEHICLES	MEMAT, LLC	27/07/2007	CHENNAI
13	258651	580/CHE/2004	18/06/2004		SLIDER CUM RECLINER FOR AUTOMOTIVE SEATS	IFB AUTOMOTIVE PVT LTD	04/03/2005	CHENNAI
14	258653	2273/CHE/2008	17/09/2008 16:33:35	19/09/2007	SADDLE-RIDE TYPE FUEL CELL THREE-WHEELED VEHICLE	HONDA MOTOR CO., LTD.	02/04/2010	CHENNAI
15	258658	1571/CHENP/2007	14/09/2005	17/09/2004	A PHARMACEUTICAL COMPOSITION COMPRISING A NITROGEN CONTAINING AROMATIC RING DERIVATIVE	EISAI R&D MANAGEMENT CO., LTD.,	31/08/2007	CHENNAI
16	258660	2639/CHE/2008	30/10/2008 15:30:35	02/11/2007	BOARDING DETECTION STRUCTURE FOR VEHICLE	HONDA MOTOR CO., LTD.	02/04/2010	CHENNAI
17	258668	4247/CHENP/2007	24/02/2006	25/02/2005	A PACK FOR CIGARETTES	FOCKE & CO. (GMBH & CO. KG)	21/12/2007	CHENNAI
18	258672	760/CHE/2006	25/04/2006	27/04/2005	METHOD AND DEVICE FOR INSTALLATION OF GUIDE RAILS IN A LIFT SHAFT	INVENTIO AG	22/06/2007	CHENNAI
19	258673	88/CHENP/2007	27/06/2005	08/07/2004	FUSE FOR A CHIP	VISHAY BCcomponents BEYSCHLAG GmbH	24/08/2007	CHENNAI

Publication Under Section 43(2) in Respect of the Grant

Following Patents have been granted and any person interested in opposing these patents under Section 25(2) may at any time within one year from the date of this issue, give notice to the Controller of Patents at the appropriate office, on the prescribed form-7 along with written statement and evidence, if any.

Serial Number	Patent Number	Application Number	Date of Application	Date of Priority	Title of Invention	Name of Patentee	Date of Publication of Abstract u/s 11(A)	Appropriate Office
1	258616	4905/KOLNP/2007	07/06/2002	08/06/2001	A MEASURING DEVICE FOR AN ELECTRICAL INSTALLATION TO DETECT RESIDUAL CURRENT	EATON ELECTRIC LIMITED	01/08/2008	KOLKATA
2	258617	3050/KOLNP/2006	05/08/2005	05/08/2004	A METHOD OF SELECTING A CELL BY A MOBILE TERMINAL IN A WIRELESS COMMUNICATION SYSTEM AND A MOBILE TERMINAL	LG ELECTRONICS INC.	08/06/2007	KOLKATA
3	258620	328/KOLNP/2008	20/03/2006	27/07/2005	CELLULAR COMMUNICATIONS SYSTEM AND THE UNITS THEREOF	GROMAKOV YURY ALEXEEVICH	08/08/2008	KOLKATA
4	258622	1723/KOLNP/2008	30/10/2006	02/11/2005	METHOD FOR ESTABLISHING A TEMPORARY BUFFER FOR PACKET DATA TRANSMITTED FROM A MOBILE STATION TO A WIRELESS NETWORK	NOKIA SIEMENS NETWORKS GMBH & CO. KG.	26/12/2008	KOLKATA
5	258623	847/KOLNP/2006	03/12/2004	03/12/2003	TUBULIN INHIBITORS	YM BIOSCIENCES AUSTRALIA PTY LTD	13/04/2007	KOLKATA
6	258632	3220/KOLNP/2006	06/05/2005	06/05/2004	IMIDAZOYL BENZAMIDE ANTI CANCER AGENTS	CYTOKINETICS, INC.	08/06/2007	KOLKATA
7	258633	4638/KOLNP/2007	10/05/2006	18/05/2005	DEVICE FOR CHECKING THE END POSITIONS OF MOVABLE PARTS OF A RAILWAY SWITCH	VAE EISENBAHNSYSTEM E GMBH.,VAE GMBH	02/01/2009	KOLKATA
8	258638	1053/KOLNP/2008	08/06/2006	12/09/2005	HOLLOW FIBER MEMBRANE SEPARATION DEVICE	FRESENIUS MEDICAL CARE DEUTSCHLAND GMBH	19/12/2008	KOLKATA
9	258639	301/KOLNP/2008	15/09/2006	15/09/2005	ABSORBENT CONTAINING FERROUS CARBONATE FOR REMOVAL OF SULFUR CONTAINING COMPOUNDS	NEW TECHNOLOGY VENTURES, INC.	05/12/2008	KOLKATA

10	258643	2353/KOLNP/2007	06/01/2006	27/01/2005	METHOD AND DEVICE FOR GRINDING CERAMIC SPHERES	ATLANTIC GMBH	17/08/2007	KOLKATA
11	258652	1682/KOLNP/2008	25/09/2006	26/09/2005	SINTERED REFRACTORY PRODUCT EXHIBITING ENHANCED THERMAL SHOCK RESISTANCE	SAINT-GOBAIN CENTRE DE RECHERCHES ET D'ETUDES EUROPEEN	26/12/2008	KOLKATA
12	258657	3716/KOLNP/2007	14/09/2005	14/09/2004	A SENSOR FOR OBTAINING AN ACTUAL VALUE OF CYCLIC USER PROPULSION EFFORT FOR PROPELLING A MOTOR ASSISTED USER-PROPELLED VEHICLE AND A METHOD FOR MEASURING CYCLIC PARAMETER VARIATIONS OF A MOTOR-ASSISTED USER-PROPELLED VEHICLE	SYSTEMES D'ENERGIE ET PROPULSION EPS INC. / EPS ENERGY AND PROPULSION SYSTEMS INC.	23/05/2008	KOLKATA
13	258659	3431/KOLNP/2007	20/04/2006	21/04/2005	METHOD FOR PRODUCING NICOTINIC ACID DERIVATIVE OR SALT THEREOF	ISHIHARA SANGYO KAISHA, LTD.	18/01/2008	KOLKATA
14	258661	1706/KOLNP/2006	22/03/2005	02/04/2004	HIGH-LIGHT FASTNESS INKS FOR DIGITAL TEXTILE PRINTING	DYSTAR COLOURS DISTRIBUTION GMBH	11/05/2007	KOLKATA
15	258664	3556/KOLNP/2007	16/03/2006	18/03/2005	FILTER ELEMENT PROVIDED WITH A COATING FOR SURFACE FILTRATION	HERDING GMBH FILTERTECHNIK	13/06/2008	KOLKATA
16	258666	368/KOL/2003	01/07/2003	16/07/2002	METHOD FOR THE PRODUCTION OF ACRYCLIC ACID	NIPPON SHOKUBAI CO., LTD.	04/02/2005	KOLKATA
17	258669	743/KOLNP/2007	06/09/2005	23/09/2004	A ROUTER	MOTOROLA MOBILITY, INC	13/07/2007	KOLKATA
18	258670	248/KOLNP/2007	19/07/2005	20/07/2004	DEVICE FOR ELECTRICAL CONNECTION OF DISCONTINUOUS CONDUCTORS	ITALGENIO S.R.L.	29/06/2007	KOLKATA
19	258671	301/KOLNP/2007	03/08/2005	04/08/2004	BROADCAST/MULTICAST SERVICE SYSTEM AND METHOD PROVIDING INTER-NETWORK ROAMING	LG ELECTRONICS, INC.	06/07/2007	KOLKATA
20	258674	3248/KOLNP/2009	23/07/2007	25/04/2007	PROCESS FOR PREPARING BISMUTH OXIDE, AND THE APPARATUS THEREFOR	DANSUK INDUSTRIAL CO., LTD.	04/12/2009	KOLKATA

CONTINUED TO PART- 2

CONTINUED FROM PART- 1

INTRODUCTION

In view of the recent amendment made in the Designs (Amendment) Rules, 2008 with effect from 17/06/2008, Publication of the matter relating to Designs is being published in the Official Journal of The Patent Office. This Journal is being published on weekly basis on every Friday covering the various proceedings on Designs as required according to the provisions of under Rule 22, 25, 27 and 39 of the Design (Amendment) Rules, 2008. All the enquiries on this Official Journal and other information as required by the public should be addressed to the Controller General of Patents, Designs & Trade Marks. Suggestions and comments are requested from all quarters so that the content can be enriched.

DESIGN
CORRIGENDUM

The Registered Design No. 250440 which has been erroneously published in the official Journal of India dated 03/01/2014, part –II, at page 575, column 3 in the name of BOSE CORPORATION, A CORPORATION OF THE STATE OF DELAWARE, OF THE MOUNTAIN, MS40 FRAMINGHAM, MASSACHUSETTS 01701-9168, UNITED STATES OF AMERICA Class 14-03, Date of Registration 24/12/2012, Titled as HEADPHONES SET, Priority Number 29/426,761, DATE 10/07/2012, COUNTRY U.S.A. should read as BOSE CORPORATION, A CORPORATION OF THE STATE OF DELAWARE, OF THE MOUNTAIN, MS40 FRAMINGHAM, MASSACHUSETTS 01701-9168, UNITED STATES OF AMERICA Class 14-03, Date of Registration 24/12/2012, Titled as HEADPHONE SET, Priority Number 29/426,761, DATE 10/07/2012, COUNTRY U.S.A.

COPYRIGHT PUBLICATION

SL NO	CASE NUMBERS	RENEWED ON
1.	191221	17.01.2014
2.	191350	17.01.2014
3.	184077	28.11.2013
4.	187318	20.12.2013
5.	188760	20.12.2013
6.	188949	20.12.2013
7.	191067	20.12.2013
8.	192000	20.12.2013
9.	192002	20.12.2013
10.	193199	20.12.2013
11.	193887	18.12.2013
12.	250210	18.12.2013
13.	251472	18.12.2013
14.	185719	17.01.2014
15.	185721	17.01.2014
16.	194857	09.01.2014
17.	194858	07.01.2014
18.	195330	31.12.2013
19.	248346	20.01.2014
20.	248347	20.01.2014
21.	248348	20.01.2014
22.	252128	09.01.2014

DESIGNS ACT 2000
(Under Section 31)
RECTIFICATION OF REGISTER

PULK PTE. LTD, a company of Singapore has filed an application on Form-17 through their agent Prashant Phillips of Lakshmikumaran & Sridharan, New Delhi on 18/12/2013 for the rectification of name of the Assignee in the Register of Designs are as follows:-

Design No.	Entered name of the Assignee	Changed to
244773	PULK PTE LTD	PULK PTE. LTD

Notice of opposition to the Rectification of Register of Designs may be given as per rule 40 of the Design Rules, 2001 as amended Design (amendment) Rules, 2008.

REGISTRATION OF DESIGNS

The following designs have been registered. They are now open for public inspection. In the following each entry the Date of Registration is shown. The Priority Number, Priority Date and Priority Country are also shown

DESIGN NUMBER	252179
CLASS	21-01
1)PLAYTONE PRODUCTS, F-4, GALI NO. 33, MAHENDRA PARK, DELHI-110033, INDIA. (AN INDIAN PROPRIETORSHIP FIRM WHOSE PROPRIETOR IS :- SH. MANJEET LAL SEHGAL. AN INDIAN NATIONAL OF THE ABOVE ADDRESS	
DATE OF REGISTRATION	07/03/2013
TITLE	TOY
PRIORITY NA	

DESIGN NUMBER	254217
CLASS	11-01
1)RADIUS CORPORATION LTD. WHOSE ADDRESS IS 57-58, VARDHMAN NAGAR, RAJNANDGAON-491441, STATE-CHHATTISGARH, INDIA A REGISTERED COMPANY SITUATED IN INDIA	
DATE OF REGISTRATION	31/05/2013
TITLE	JEWELLERY CLASP
PRIORITY NA	

DESIGN NUMBER	255169
CLASS	26-06
1)VOLVO TRUCK CORPORATION, OF 405 08 GÖTEBORG, SWEDEN	
DATE OF REGISTRATION	11/07/2013
TITLE	DIRECTION INDICATOR FOR VEHICLES

PRIORITY

PRIORITY NUMBER	DATE	COUNTRY
002179564-0003	06/02/2013	OHIM

DESIGN NUMBER	255298
CLASS	06-03
1)KISH HANDICRAFTS PRIVATE LIMITED, AN INDIAN COMPANY, OF D-174, SECTOR 63, NOIDA, U. P.-201301, INDIA	
DATE OF REGISTRATION	17/07/2013
TITLE	TABLE
PRIORITY NA	

DESIGN NUMBER	255320
CLASS	07-03
1)MA DESIGN INDIA PRIVATE LIMITED, A COMPANY INCORPORATED IN INDIA HAVING ITS PRINCIPAL PLACE OF BUSINESS AT A-41, SECTOR-80, PHASE-II, NOIDA-201305, U.P. INDIA	
DATE OF REGISTRATION	18/07/2013
TITLE	CHEESE KNIFE
PRIORITY NA	

DESIGN NUMBER	255368
CLASS	18-02
1)KYOCERA DOCUMENT SOLUTIONS INC., A COMPANY DULY ORGANIZED AND EXISTING UNDER THE LAWS OF JAPAN, OF THE ADDRESS 1-2-28, TAMATSUKURI, CHUO-KU, OSAKA-SHI, OSAKA 540-8585, JAPAN	
DATE OF REGISTRATION	22/07/2013
TITLE	TONER CARTRIDGE

PRIORITY

PRIORITY NUMBER	DATE	COUNTRY
2013-006564	26/03/2013	JAPAN

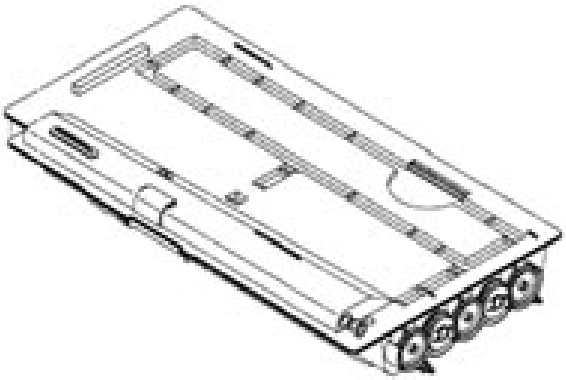

DESIGN NUMBER	255000
CLASS	14-03
1)NEC CORPORATION, A JAPANESE COMPANY OF 7-1, SHIBA 5-CHOME, MINATO-KU, TOKYO, JAPAN	
DATE OF REGISTRATION	04/07/2013
TITLE	WIRELESS COMMUNICATION REPEATER

PRIORITY

PRIORITY NUMBER	DATE	COUNTRY
2013-001119	23/01/2013	JAPAN

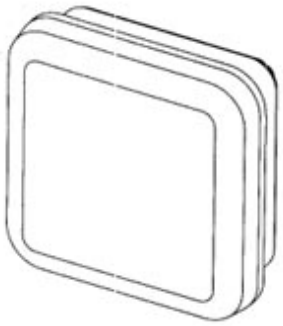

DESIGN NUMBER	255020
CLASS	28-03
1)LASER SHAVING (INDIA) PRIVATE LIMITED, A COMPANY DULY ORGANIZED UNDER THE INDIAN COMPANIES ACT, 1956 AND HAVING ITS REGISTERED OFFICE AT MALHOTRA HOUSE, 6-3-1186, BEGUMPET, HYDERABAD 500016, ANDHRA PRADESH, INDIA.	
DATE OF REGISTRATION	05/07/2013
TITLE	RAZOR
PRIORITY NA	

DESIGN NUMBER	255046
CLASS	08-06
1)AMITBHAI M. CHOVATIYA AND ASHISHBHAI G. GADHIYA BOTH INDIAN NATIONAL PARTNERS OF FORAM SALES CORPORATION AN INDIAN PARTNERSHIP FIRM HAVING ITS PRINCIPAL PLACE OF BUSINESS AT PLOT NO. 7, PATEL IND. AREA, OPP. RIDDHI SIDDHI PARK, NEAR SANDHIYA POOL, (KOTHARIYA), RAJKOT, GUJARAT-INDIA	
DATE OF REGISTRATION	05/07/2013
TITLE	HANDLE
PRIORITY NA	

DESIGN NUMBER	229357	
CLASS	13-03	
1)LARSEN & TOUBRO LIMITED L & T HOUSE, BALLARD ESTATE, MUMBAI-400 001, STATE OF MAHARASHTRA, INDIA.		
DATE OF REGISTRATION	17/05/2010	
TITLE	SHUNT RELEASE FOR MINIATURE CIRCUIT BREAKER	
PRIORITY NA		
DESIGN NUMBER	255499	
CLASS	26-02	
1)ANDSLITE PVT. LTD., 103, FIE, PATPARGANJ INDL. AREA, DELHI-110092, INDIA (AN INDIAN COMPANY DULY REGISTERED UNDER THE COMPANIES ACT, 1956)		
DATE OF REGISTRATION	29/07/2013	
TITLE	SOLAR LED LANTERN	
PRIORITY NA		
DESIGN NUMBER	256910	
CLASS	05-05	
1)M/S. BIBA APPARELS PRIVATE LIMITED, AN INDIAN PRIVATE LIMITED COMPANY INCORPORATED UNDER THE PROVISION OF THE COMPANIES ACT, 1956, AND HAVING ITS'S REGISTERED OFFICE AT RELIABLE HOUSE, SITUATED AT HANUMAN SILK MILL COMPOUND, KANJURMARG (WEST), OPP. HUMA MALL, MUMBAI-400 078 MAHARASHTRA, INDIA.		
DATE OF REGISTRATION	30/09/2013	
TITLE	TEXTILE FABRIC	
PRIORITY NA		

DESIGN NUMBER	256942	
CLASS	05-05	
1)M/S. BIBA APPARELS PRIVATE LIMITED, AN INDIAN PRIVATE LIMITED COMPANY INCORPORATED UNDER THE PROVISION OF THE COMPANIES ACT, 1956, AND HAVING ITS'S REGISTERED OFFICE AT RELIABLE HOUSE, SITUATED AT HANUMAN SILK MILL COMPOUND, KANJURMARG (WEST), OPP. HUMA MALL, MUMBAI-400078 MAHARASHTRA, INDIA		
DATE OF REGISTRATION	30/09/2013	
TITLE	TEXTILE FABRIC	
PRIORITY NA		
DESIGN NUMBER	256960	
CLASS	05-05	
1)M/S. BIBA APPARELS PRIVATE LIMITED, AN INDIAN PRIVATE LIMITED COMPANY INCORPORATED UNDER THE PROVISION OF THE COMPANIES ACT, 1956, AND HAVING ITS'S REGISTERED OFFICE AT RELIABLE HOUSE, SITUATED AT HANUMAN SILK MILL COMPOUND, KANJURMARG (WEST), OPP. HUMA MALL, MUMBAI-400 078 MAHARASHTRA, INDIA.		
DATE OF REGISTRATION	30/09/2013	
TITLE	TEXTILE FABRIC	
PRIORITY NA		
DESIGN NUMBER	257022	
CLASS	05-05	
1)M/S. BIBA APPARELS PRIVATE LIMITED, AN INDIAN PRIVATE LIMITED COMPANY INCORPORATED UNDER THE PROVISION OF THE COMPANIES ACT, 1956, AND HAVING ITS'S REGISTERED OFFICE AT RELIABLE HOUSE, SITUATED AT HANUMAN SILK MILL COMPOUND, KANJURMARG (WEST), OPP. HUMA MALL, MUMBAI-400078 MAHARASHTRA, INDIA		
DATE OF REGISTRATION	30/09/2013	
TITLE	TEXTILE FABRIC	
PRIORITY NA		

DESIGN NUMBER	257058
CLASS	05-05
1)M/S. BIBA APPARELS PRIVATE LIMITED, AN INDIAN PRIVATE LIMITED COMPANY INCORPORATED UNDER THE PROVISION OF THE COMPANIES ACT, 1956, AND HAVING ITS'S REGISTERED OFFICE AT RELIABLE HOUSE, SITUATED AT HANUMAN SILK MILL COMPOUND, KANJURMARG (WEST), OPP. HUMA MALL, MUMBAI-400 078 MAHARASHTRA, INDIA.	
DATE OF REGISTRATION	30/09/2013
TITLE	TEXTILE FABRIC
PRIORITY NA	

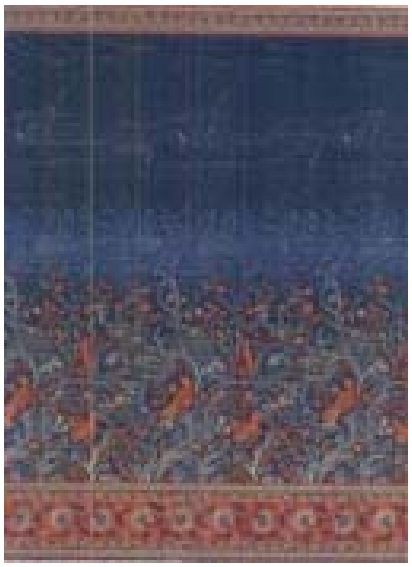

DESIGN NUMBER	257066
CLASS	05-05
1)M/S. BIBA APPARELS PRIVATE LIMITED, AN INDIAN PRIVATE LIMITED COMPANY INCORPORATED UNDER THE PROVISION OF THE COMPANIES ACT, 1956, AND HAVING ITS'S REGISTERED OFFICE AT RELIABLE HOUSE, SITUATED AT HANUMAN SILK MILL COMPOUND, KANJURMARG (WEST), OPP. HUMA MALL, MUMBAI-400 078 MAHARASHTRA, .	
DATE OF REGISTRATION	30/09/2013
TITLE	TEXTILE FABRIC
PRIORITY NA	

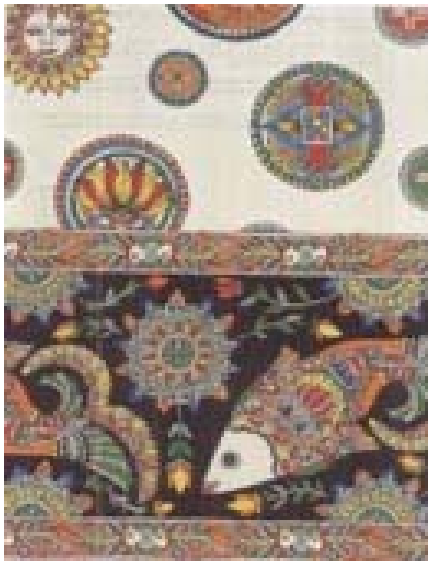

DESIGN NUMBER	194816
CLASS	19-99
1)MERZ & KRELL GMBH & CO. KGAA BAHNHOFSTRASSE 76, 64401 GROSS-BIEBERAU, GERMANY	
DATE OF REGISTRATION	11/03/2004
TITLE	COMPONENT OF WRITING
PRIORITY NA	

DESIGN NUMBER	255133
CLASS	12-08
1)VOLVO TRUCK CORPORATION, OF 40508 GOTEBORG, SWEDEN	
DATE OF REGISTRATION	11/07/2013
TITLE	VEHICLE CAB

PRIORITY

PRIORITY NUMBER	DATE	COUNTRY
002179234-0001	06/02/2013	OHIM

DESIGN NUMBER	255255
CLASS	02-04
1)THAIKATTIL JOSE, THAIKATTIL HOUSE, OLLUKARA P.O., THRISSUR, KERALA STATE 680655, INDIA, AN INDIAN NATIONAL	
DATE OF REGISTRATION	16/07/2013
TITLE	FOOTWEAR
PRIORITY NA	

DESIGN NUMBER	255270
CLASS	09-05
1)CELEBRATION FOODS PRIVATE LIMITED, OF FF-111, 1ST FLOOR, MOHTA BUILDING, 4, BHIKAJI CAMA PLACE, NEW DELHI-110066, INDIA, AN INDIAN PRIVATE LIMITED COMPANY	
DATE OF REGISTRATION	16/07/2013
TITLE	SACHET FOR BETEL LEAF
PRIORITY NA	

DESIGN NUMBER	255299	
CLASS	06-03	
1)KISH HANDICRAFTS PRIVATE LIMITED, AN INDIAN COMPANY, OF D-174, SECTOR 63, NOIDA, U. P.-201301, INDIA		
DATE OF REGISTRATION	17/07/2013	
TITLE	TABLE	
PRIORITY NA		
DESIGN NUMBER	254987	
CLASS	23-01	
1)BHAVESH GORDHANBHAI ZALAVADIYA, INDIVIDUAL, AN INDIAN NATIONAL, PROPRIETOR OF ROYAL TECHNOLOGIES, A SOLE PROPRIETARY CONCERN, NATIONALITY-INDIAN, HAVING ITS OFFICE AT B-14, GAYATRI INDUSTRIAL ESTATE, NEAR BHIKSHUK GRUH, ODHAV, AHMEDABAD, GUJARAT STATE, INDIA		
DATE OF REGISTRATION	04/07/2013	
TITLE	WATER FILTER CABINET	
PRIORITY NA		
DESIGN NUMBER	255047	
CLASS	07-04	
1)JAGDISHBHAI B. PATEL AN INDIAN NATIONAL SOLE PROPRIETOR OF J.B. INDUSTRIES AN INDIAN PROPRIETORSHIP FIRM HAVING ITS PRINCIPAL PLACE OF BUSINESS AT ADDRESS GONDAL ROAD, B/H. GOKULDHAM, GOKUL NAGAR-3, RAJKOT, GUJARAT-INDIA		
DATE OF REGISTRATION	05/07/2013	
TITLE	POTATO SLICE CUTTER	
PRIORITY NA		

DESIGN NUMBER	255091
CLASS	10-02
1)BULGARI HORLOGERIE SA, A COMPANY ORGANIZED AND EXISTING UNDER THE LAWS OF SWITZERLAND, OF THE ADDRESS RUE DE MONRUZ 34, 2000 NEUCHATEL, SWITZERLAND	
DATE OF REGISTRATION	09/07/2013
TITLE	WRISTWATCH

PRIORITY

PRIORITY NUMBER	DATE	COUNTRY
716681101	28/01/2013	WIPO

DESIGN NUMBER	255518
CLASS	08-08
1)HITESH N. THUMMAR, INDIAN NATIONALITY, PARTNER OF M/S. BRAHMANI STEEL INDUSTRIES, INDIAN NATIONALITY, HAVING ADDRESS AT PATEL NAGAR 5/11 CORNER, 2ND FLOOR, BHAGAT BHUVAN COMPLEX, NR. 80, FEET ROAD, SORATHIYAWADI, RAJKOT, GUJARAT STATE, INDIA	
DATE OF REGISTRATION	26/07/2013
TITLE	CURTAIN BRACKET
PRIORITY NA	

DESIGN NUMBER	255565
CLASS	23-01
1)TORAY INDUSTRIES, INC., A JAPANESE COMPANY OF 1-1, NIHONBASHI MUROMACHI 2-CHOME, CHUO-KU, TOKYO 103-8666, JAPAN	
DATE OF REGISTRATION	30/07/2013
TITLE	WATER PURIFIER

PRIORITY

PRIORITY NUMBER	DATE	COUNTRY
201330032338.1	01/02/2013	CHINA

DESIGN NUMBER	256902
CLASS	05-05
1)M/S. BIBA APPARELS PRIVATE LIMITED, AN INDIAN PRIVATE LIMITED COMPANY INCORPORATED UNDER THE PROVISION OF THE COMPANIES ACT, 1956, AND HAVING ITS'S REGISTERED OFFICE AT RELIABLE HOUSE, SITUATED AT HANUMAN SILK MILL COMPOUND, KANJURMARG (WEST), OPP. HUMA MALL, MUMBAI-400 078 MAHARASHTRA, INDIA.	
DATE OF REGISTRATION	30/09/2013
TITLE	TEXTILE FABRIC
PRIORITY NA	

DESIGN NUMBER	256911
CLASS	05-05
1)M/S. BIBA APPARELS PRIVATE LIMITED, AN INDIAN PRIVATE LIMITED COMPANY INCORPORATED UNDER THE PROVISION OF THE COMPANIES ACT, 1956, AND HAVING ITS'S REGISTERED OFFICE AT RELIABLE HOUSE, SITUATED AT HANUMAN SILK MILL COMPOUND, KANJURMARG (WEST), OPP. HUMA MALL, MUMBAI-400078 MAHARASHTRA, INDIA	
DATE OF REGISTRATION	30/09/2013
TITLE	TEXTILE FABRIC
PRIORITY NA	

DESIGN NUMBER	256919
CLASS	05-05
1)M/S. BIBA APPARELS PRIVATE LIMITED, AN INDIAN PRIVATE LIMITED COMPANY INCORPORATED UNDER THE PROVISION OF THE COMPANIES ACT, 1956, AND HAVING ITS'S REGISTERED OFFICE AT RELIABLE HOUSE, SITUATED AT HANUMAN SILK MILL COMPOUND, KANJURMARG (WEST), OPP. HUMA MALL, MUMBAI-400078 MAHARASHTRA, INDIA	
DATE OF REGISTRATION	30/09/2013
TITLE	TEXTILE FABRIC
PRIORITY NA	

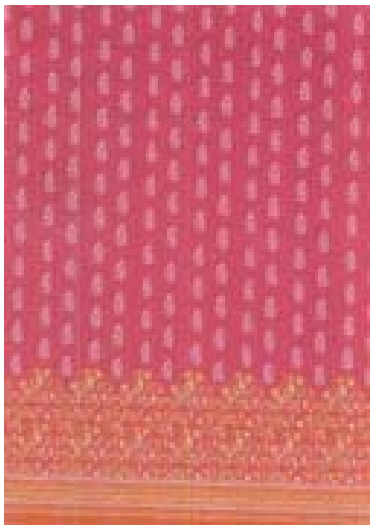

DESIGN NUMBER	256934	
CLASS	05-05	
1)M/S. BIBA APPARELS PRIVATE LIMITED, AN INDIAN PRIVATE LIMITED COMPANY INCORPORATED UNDER THE PROVISION OF THE COMPANIES ACT, 1956, AND HAVING ITS'S REGISTERED OFFICE AT RELIABLE HOUSE, SITUATED AT HANUMAN SILK MILL COMPOUND, KANJURMARG (WEST), OPP. HUMA MALL, MUMBAI-400078 MAHARASHTRA, INDIA		
DATE OF REGISTRATION	30/09/2013	
TITLE	TEXTILE FABRIC	
PRIORITY NA		
DESIGN NUMBER	256946	
CLASS	05-05	
1)M/S. BIBA APPARELS PRIVATE LIMITED, AN INDIAN PRIVATE LIMITED COMPANY INCORPORATED UNDER THE PROVISION OF THE COMPANIES ACT, 1956, AND HAVING ITS'S REGISTERED OFFICE AT RELIABLE HOUSE, SITUATED AT HANUMAN SILK MILL COMPOUND, KANJURMARG (WEST), OPP. HUMA MALL, MUMBAI-400 078 MAHARASHTRA, INDIA.		
DATE OF REGISTRATION	30/09/2013	
TITLE	TEXTILE FABRIC	
PRIORITY NA		
DESIGN NUMBER	256963	
CLASS	05-05	
1)M/S. BIBA APPARELS PRIVATE LIMITED, AN INDIAN PRIVATE LIMITED COMPANY INCORPORATED UNDER THE PROVISION OF THE COMPANIES ACT, 1956, AND HAVING ITS'S REGISTERED OFFICE AT RELIABLE HOUSE, SITUATED AT HANUMAN SILK MILL COMPOUND, KANJURMARG (WEST), OPP. HUMA MALL, MUMBAI-400 078 MAHARASHTRA, INDIA.		
DATE OF REGISTRATION	30/09/2013	
TITLE	TEXTILE FABRIC	
PRIORITY NA		

DESIGN NUMBER	257023	
CLASS	05-05	
1)M/S. BIBA APPARELS PRIVATE LIMITED, AN INDIAN PRIVATE LIMITED COMPANY INCORPORATED UNDER THE PROVISION OF THE COMPANIES ACT, 1956, AND HAVING ITS'S REGISTERED OFFICE AT RELIABLE HOUSE, SITUATED AT HANUMAN SILK MILL COMPOUND, KANJURMARG (WEST), OPP. HUMA MALL, MUMBAI-400078 MAHARASHTRA, INDIA		
DATE OF REGISTRATION	30/09/2013	
TITLE	TEXTILE FABRIC	
PRIORITY NA		
DESIGN NUMBER	257067	
CLASS	05-05	
1)M/S. BIBA APPARELS PRIVATE LIMITED, AN INDIAN PRIVATE LIMITED COMPANY INCORPORATED UNDER THE PROVISION OF THE COMPANIES ACT, 1956, AND HAVING ITS'S REGISTERED OFFICE AT RELIABLE HOUSE, SITUATED AT HANUMAN SILK MILL COMPOUND, KANJURMARG (WEST), OPP. HUMA MALL, MUMBAI-400 078 MAHARASHTRA, INDIA.		
DATE OF REGISTRATION	30/09/2013	
TITLE	TEXTILE FABRIC	
PRIORITY NA		
DESIGN NUMBER	215270	
CLASS	15-09	
1)AERO PRODUCTS, A PROPRIETARY FIRM HAVING ADDRESS AT 212, KIRTI ESTATE, OPP. RAILWAY RESERVATION COUNTER, BHAYANDER (EAST),THANE (DIST)-401105, MAHARASHTRA, INDIA,		
DATE OF REGISTRATION	13/03/2008	
TITLE	SILVER RECOVERY UNITS	
PRIORITY NA		

DESIGN NUMBER	254230	
CLASS	12-16	
1)MAHINDRA & MAHINDRA LTD., A COMPANY INCORPORATED UNDER THE INDIAN COMPANIES ACT, 1913 OF GATEWAY BUILDING, APOLLO BUNDER, MUMBAI 400001, MAHARASHTRA, INDIA		
DATE OF REGISTRATION	31/05/2013	
TITLE	WHEEL RIM FOR VEHICLE	
PRIORITY NA		
DESIGN NUMBER	252613	
CLASS	10-05	
1)PRESTO STANTEST PRIVATE LIMITED OF I-42A, DLF INDUSTRIAL AREA, PHASE-1, DELHI MATHURA ROAD, FARIDABAD-121003, HARYANA, INDIA, A COMPANY DULY ORGANIZED AND EXISTING UNDER THE LAWS OF INDIA		
DATE OF REGISTRATION	22/03/2013	
TITLE	TOP LOAD TESTER	
PRIORITY NA		
DESIGN NUMBER	255286	
CLASS	08-06	
1)(1) MAYURBHAI RADADIYA (2) BHAVESHBHAI RAKHOLIYA BOTH INDIAN NATIONAL PARTNERS OF PLANET ENTERPRISE AN INDIAN PARTNERSHIP FIRM HAVING ITS PRINCIPAL PLACE OF BUSINESS AT 4-PARSANA SOCIETY, NEAR 50 FEET MAIN ROAD, OPP. 73 NO. SCHOOL, PATEL NAGAR RAJKOT, GUJARAT-INDIA		
DATE OF REGISTRATION	17/07/2013	
TITLE	HANDLE	
PRIORITY NA		

DESIGN NUMBER	254994
CLASS	02-04
1)THAIKATTIL JOSE, THAIKATTIL HOUSE, OLLUKARA P.O., THRISSUR, KERALA STATE 680655, INDIA, AN INDIAN NATIONAL	
DATE OF REGISTRATION	04/07/2013
TITLE	FOOTWEAR
PRIORITY NA	

DESIGN NUMBER	255070
CLASS	31-00
1)TTK PRESTIGE LIMITED, AN INDIAN COMPANY, INCORPORATED UNDER THE COMPANIES ACT 1956, HAVING ITS PRINCIPAL PLACE OF BUSINESS AT 11TH FLOOR, BRIGADE TOWERS, 135 BRIGADE ROAD, BANGALORE-560 025, STATE OF KARNATAKA, INDIA	
DATE OF REGISTRATION	08/07/2013
TITLE	HOUSEHOLD MIXING MACHINE
PRIORITY NA	

DESIGN NUMBER	253478
CLASS	08-07
1)M/S GODANI METAL CO., B-14, INDUSTRIAL ESTATE, ALIGARH-202001 (UTTAR PRADESH), AN INDIAN PARTNERSHIP FIRM WHOSE PARTNERS ARE SH. RAJNEESH GODANI AND SH. RAVI MAHESHWARI (INDIAN NATIONALS)	
DATE OF REGISTRATION	29/04/2013
TITLE	DOOR BOLT
PRIORITY NA	

DESIGN NUMBER	255972
CLASS	05-05
1)CHAMUNDI TEXTILES (SILK MILLS) LTD., A COMPANY INCORPORATED UNDER THE INDIAN COMPANIES ACT, 1956, HAVING ITS BUSINESS AT B 206, BRIGADE MAJESTIC, NO. 26, 1ST MAIN ROAD, GANDHI NAGAR, BANGALORE 560009	
DATE OF REGISTRATION	22/08/2013
TITLE	TEXTILE FABRIC
PRIORITY NA	

DESIGN NUMBER	253736
CLASS	02-01
1)UNICHARM CORPORATION, OF 182, SHIMOBUN, KINSEI-CHO, SHIKOKUCHUO-SHI, EHIME 799-0111, JAPAN; NATIONALITY: JAPAN	
DATE OF REGISTRATION	09/05/2013
TITLE	DISPOSABLE DIAPER
PRIORITY	

PRIORITY NUMBER	DATE	COUNTRY
2012-027502	11/11/2012	JAPAN

DESIGN NUMBER	256305
CLASS	02-04
1)LIBERTY SHOES LIMITED, AN INDIAN COMPANY, OF LIBERTY SHOES LIMITED, AN INDIAN COMPANY, OF LIBERTY PURAM, 13, MILESTONE, GT KARNAL ROAD, KUTAIL, DT-KARNAL - 132001, HARYANA, INDIA	
DATE OF REGISTRATION	06/09/2013
TITLE	SOLE FOR FOOTWEAR
PRIORITY NA	

DESIGN NUMBER	255396
CLASS	07-01
1)VIPIN JAIN AN INDIAN NATIONAL GOKUL INTERNATIONAL, GALA NO. 2 ROOPAL INDUSTRIAL ESTATE, H.P. GAS GODOWN GALLI, BHAYANDAR EAST, THANE-401105	
DATE OF REGISTRATION	25/07/2013
TITLE	WATER JUG
PRIORITY NA	

DESIGN NUMBER	255513
CLASS	07-05
1)ROWENTA WERKE GMBH, HERRNRAINWEG 5, 63067 OFFENBACH AM MAIN, GERMANY, A GERMAN CORPORATION	
DATE OF REGISTRATION	26/07/2013
TITLE	SOLEPLATE FOR STEAM IRON
PRIORITY	

PRIORITY NUMBER	DATE	COUNTRY
002174094-0001	29/01/2013	OHIM

DESIGN NUMBER	256907
CLASS	05-05
1)M/S. BIBA APPARELS PRIVATE LIMITED, AN INDIAN PRIVATE LIMITED COMPANY INCORPORATED UNDER THE PROVISION OF THE COMPANIES ACT, 1956, AND HAVING ITS'S REGISTERED OFFICE AT RELIABLE HOUSE, SITUATED AT HANUMAN SILK MILL COMPOUND, KANJURMARG (WEST), OPP. HUMA MALL, MUMBAI-400078 MAHARASHTRA, INDIA	
DATE OF REGISTRATION	30/09/2013
TITLE	TEXTILE FABRIC
PRIORITY NA	

DESIGN NUMBER	256915	
CLASS	05-05	
1)M/S. BIBA APPARELS PRIVATE LIMITED, AN INDIAN PRIVATE LIMITED COMPANY INCORPORATED UNDER THE PROVISION OF THE COMPANIES ACT, 1956, AND HAVING ITS'S REGISTERED OFFICE AT RELIABLE HOUSE, SITUATED AT HANUMAN SILK MILL COMPOUND, KANJURMARG (WEST), OPP. HUMA MALL, MUMBAI-400 078 MAHARASHTRA, INDIA.		
DATE OF REGISTRATION	30/09/2013	
TITLE	TEXTILE FABRIC	
PRIORITY NA		
DESIGN NUMBER	256926	
CLASS	05-05	
1)M/S. BIBA APPARELS PRIVATE LIMITED, AN INDIAN PRIVATE LIMITED COMPANY INCORPORATED UNDER THE PROVISION OF THE COMPANIES ACT, 1956, AND HAVING ITS'S REGISTERED OFFICE AT RELIABLE HOUSE, SITUATED AT HANUMAN SILK MILL COMPOUND, KANJURMARG (WEST), OPP. HUMA MALL, MUMBAI-400078 MAHARASHTRA, INDIA		
DATE OF REGISTRATION	30/09/2013	
TITLE	TEXTILE FABRIC	
PRIORITY NA		
DESIGN NUMBER	256950	
CLASS	05-05	
1)M/S. BIBA APPARELS PRIVATE LIMITED, AN INDIAN PRIVATE LIMITED COMPANY INCORPORATED UNDER THE PROVISION OF THE COMPANIES ACT, 1956, AND HAVING ITS'S REGISTERED OFFICE AT RELIABLE HOUSE, SITUATED AT HANUMAN SILK MILL COMPOUND, KANJURMARG (WEST), OPP. HUMA MALL, MUMBAI-400 078 MAHARASHTRA, INDIA.		
DATE OF REGISTRATION	30/09/2013	
TITLE	TEXTILE FABRIC	
PRIORITY NA		

DESIGN NUMBER	256967
CLASS	05-05
1)M/S. BIBA APPARELS PRIVATE LIMITED, AN INDIAN PRIVATE LIMITED COMPANY INCORPORATED UNDER THE PROVISION OF THE COMPANIES ACT, 1956, AND HAVING ITS'S REGISTERED OFFICE AT RELIABLE HOUSE, SITUATED AT HANUMAN SILK MILL COMPOUND, KANJURMARG (WEST), OPP. HUMA MALL, MUMBAI-400 078 MAHARASHTRA, INDIA.	
DATE OF REGISTRATION	30/09/2013
TITLE	TEXTILE FABRIC
PRIORITY NA	

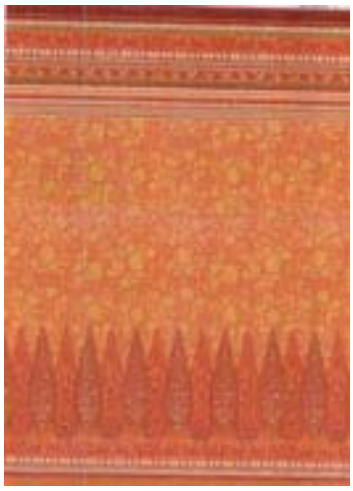

DESIGN NUMBER	257045
CLASS	05-05
1)M/S. BIBA APPARELS PRIVATE LIMITED, AN INDIAN PRIVATE LIMITED COMPANY INCORPORATED UNDER THE PROVISION OF THE COMPANIES ACT, 1956, AND HAVING ITS'S REGISTERED OFFICE AT RELIABLE HOUSE, SITUATED AT HANUMAN SILK MILL COMPOUND, KANJURMARG (WEST), OPP. HUMA MALL, MUMBAI-400078 MAHARASHTRA, INDIA	
DATE OF REGISTRATION	30/09/2013
TITLE	TEXTILE FABRIC
PRIORITY NA	

DESIGN NUMBER	257055
CLASS	05-05
1)M/S. BIBA APPARELS PRIVATE LIMITED, AN INDIAN PRIVATE LIMITED COMPANY INCORPORATED UNDER THE PROVISION OF THE COMPANIES ACT, 1956, AND HAVING ITS'S REGISTERED OFFICE AT RELIABLE HOUSE, SITUATED AT HANUMAN SILK MILL COMPOUND, KANJURMARG (WEST), OPP. HUMA MALL, MUMBAI-400 078 MAHARASHTRA, INDIA.	
DATE OF REGISTRATION	30/09/2013
TITLE	TEXTILE FABRIC
PRIORITY NA	

DESIGN NUMBER	257063
CLASS	05-05
1)M/S. BIBA APPARELS PRIVATE LIMITED, AN INDIAN PRIVATE LIMITED COMPANY INCORPORATED UNDER THE PROVISION OF THE COMPANIES ACT, 1956, AND HAVING ITS'S REGISTERED OFFICE AT RELIABLE HOUSE, SITUATED AT HANUMAN SILK MILL COMPOUND, KANJURMARG (WEST), OPP. HUMA MALL, MUMBAI-400 078 MAHARASHTRA, INDIA.	
DATE OF REGISTRATION	30/09/2013
TITLE	TEXTILE FABRIC
PRIORITY NA	

DESIGN NUMBER	255167
CLASS	26-06
1)VOLVO TRUCK CORPORATION, OF 405 08 GÖTEBORG, SWEDEN	
DATE OF REGISTRATION	11/07/2013
TITLE	DIRECTION INDICATOR FOR VEHICLES

PRIORITY

PRIORITY NUMBER	DATE	COUNTRY
002179564-0001	06/02/2013	OHIM

DESIGN NUMBER	254888
CLASS	12-16
1)TATA MOTORS LIMITED, AN INDIAN COMPANY OF BOMBAY HOUSE, 24 HOMI MODY STREET, HUTATMA CHOWK, MUMBAI 400001, INDIA	
DATE OF REGISTRATION	01/07/2013
TITLE	WHEEL OF A CAR
PRIORITY NA	

DESIGN NUMBER	254792	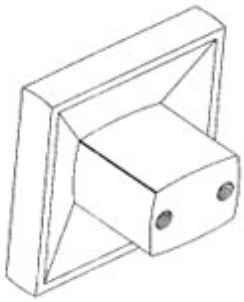
CLASS	08-06	
1)ITALIK METALWARE PVT. LTD., G: 212-215, LODHIKA, G.I.D.C., KALAWAD ROAD, METODA, RAJKOT-360003, STATE OF GUJARAT INDIA, / A PRIVATE LIMITED COMPANY INCORPORATED UNDER INDIAN COMPANIES ACT., ABOVE ADDRESS		
DATE OF REGISTRATION	25/06/2013	
TITLE	KNOB	
PRIORITY NA		
DESIGN NUMBER	255524	
CLASS	09-03	
1)PUNEET DUGGAL, DEEPAK DUGGAL AND MANJU DUGGAL (DIRECTOR), NATIONALITY INDIAN TRADING AS KAP CONES PVT. LTD. (THIS IS PVT. LTD COMPANY), NATIONALITY INDIAN. WHOES ADDRESS IS A-31/4, MAYAPURI INDUSTRIAL AREA, PHASE-I, NEW DELHI-110064		
DATE OF REGISTRATION	30/07/2013	
TITLE	CONTAINER	
PRIORITY NA		
DESIGN NUMBER	255547	
CLASS	02-04	
1)M/S SATYAM FOOTWEAR, 308/5-A, SHAHZADA BAGH, DAYA BASTI INDUSTRIAL AREA, NEW DELHI-110035, AN INDIAN PROPRIETORSHIP FIRM, WHOSE PROPRIETOR IS RAM KISHORE SHARMA, OF ABOVE ADDRESS, AN INDIAN NATIONAL		
DATE OF REGISTRATION	31/07/2013	
TITLE	FOOTWEAR	
PRIORITY NA		

DESIGN NUMBER	256916	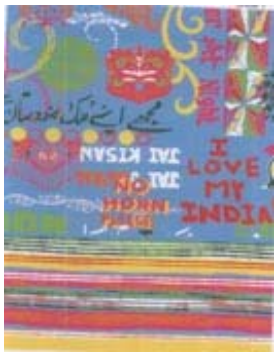
CLASS	05-05	
1)M/S. BIBA APPARELS PRIVATE LIMITED, AN INDIAN PRIVATE LIMITED COMPANY INCORPORATED UNDER THE PROVISION OF THE COMPANIES ACT, 1956, AND HAVING ITS'S REGISTERED OFFICE AT RELIABLE HOUSE, SITUATED AT HANUMAN SILK MILL COMPOUND, KANJURMARG (WEST), OPP. HUMA MALL, MUMBAI-400078 MAHARASHTRA, INDIA		
DATE OF REGISTRATION	30/09/2013	
TITLE	TEXTILE FABRIC	
PRIORITY NA		
DESIGN NUMBER	256927	
CLASS	05-05	
1)M/S. BIBA APPARELS PRIVATE LIMITED, AN INDIAN PRIVATE LIMITED COMPANY INCORPORATED UNDER THE PROVISION OF THE COMPANIES ACT, 1956, AND HAVING ITS'S REGISTERED OFFICE AT RELIABLE HOUSE, SITUATED AT HANUMAN SILK MILL COMPOUND, KANJURMARG (WEST), OPP. HUMA MALL, MUMBAI-400078 MAHARASHTRA, INDIA		
DATE OF REGISTRATION	30/09/2013	
TITLE	TEXTILE FABRIC	
PRIORITY NA		
DESIGN NUMBER	256951	
CLASS	05-05	
1)M/S. BIBA APPARELS PRIVATE LIMITED, AN INDIAN PRIVATE LIMITED COMPANY INCORPORATED UNDER THE PROVISION OF THE COMPANIES ACT, 1956, AND HAVING ITS'S REGISTERED OFFICE AT RELIABLE HOUSE, SITUATED AT HANUMAN SILK MILL COMPOUND, KANJURMARG (WEST), OPP. HUMA MALL, MUMBAI-400 078 MAHARASHTRA, INDIA.		
DATE OF REGISTRATION	30/09/2013	
TITLE	TEXTILE FABRIC	
PRIORITY NA		

DESIGN NUMBER	256968
CLASS	05-05
1)M/S. BIBA APPARELS PRIVATE LIMITED, AN INDIAN PRIVATE LIMITED COMPANY INCORPORATED UNDER THE PROVISION OF THE COMPANIES ACT, 1956, AND HAVING ITS'S REGISTERED OFFICE AT RELIABLE HOUSE, SITUATED AT HANUMAN SILK MILL COMPOUND, KANJURMARG (WEST), OPP. HUMA MALL, MUMBAI-400 078 MAHARASHTRA, INDIA.	
DATE OF REGISTRATION	30/09/2013
TITLE	TEXTILE FABRIC
PRIORITY NA	

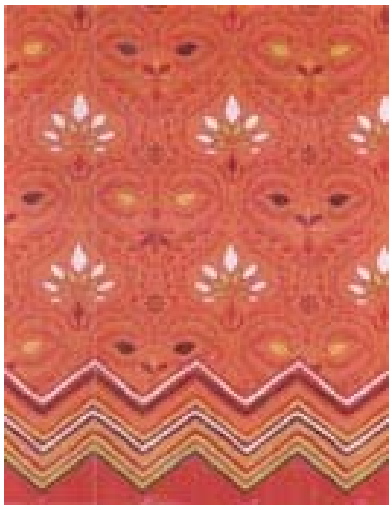

DESIGN NUMBER	257046
CLASS	05-05
1)M/S. BIBA APPARELS PRIVATE LIMITED, AN INDIAN PRIVATE LIMITED COMPANY INCORPORATED UNDER THE PROVISION OF THE COMPANIES ACT, 1956, AND HAVING ITS'S REGISTERED OFFICE AT RELIABLE HOUSE, SITUATED AT HANUMAN SILK MILL COMPOUND, KANJURMARG (WEST), OPP. HUMA MALL, MUMBAI-400078 MAHARASHTRA, INDIA.	
DATE OF REGISTRATION	30/09/2013
TITLE	TEXTILE FABRIC
PRIORITY NA	

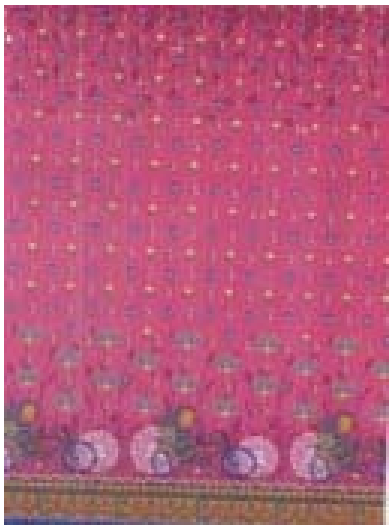

DESIGN NUMBER	257056
CLASS	05-05
1)M/S. BIBA APPARELS PRIVATE LIMITED, AN INDIAN PRIVATE LIMITED COMPANY INCORPORATED UNDER THE PROVISION OF THE COMPANIES ACT, 1956, AND HAVING ITS'S REGISTERED OFFICE AT RELIABLE HOUSE, SITUATED AT HANUMAN SILK MILL COMPOUND, KANJURMARG (WEST), OPP. HUMA MALL, MUMBAI-400 078 MAHARASHTRA, INDIA.	
DATE OF REGISTRATION	30/09/2013
TITLE	TEXTILE FABRIC
PRIORITY NA	

DESIGN NUMBER	257064	
CLASS	05-05	
1)M/S. BIBA APPARELS PRIVATE LIMITED, AN INDIAN PRIVATE LIMITED COMPANY INCORPORATED UNDER THE PROVISION OF THE COMPANIES ACT, 1956, AND HAVING ITS'S REGISTERED OFFICE AT RELIABLE HOUSE, SITUATED AT HANUMAN SILK MILL COMPOUND, KANJURMARG (WEST), OPP. HUMA MALL, MUMBAI-400 078 MAHARASHTRA, INDIA.		
DATE OF REGISTRATION	30/09/2013	
TITLE	TEXTILE FABRIC	
PRIORITY NA		
DESIGN NUMBER	257072	
CLASS	05-05	
1)M/S. BIBA APPARELS PRIVATE LIMITED, AN INDIAN PRIVATE LIMITED COMPANY INCORPORATED UNDER THE PROVISION OF THE COMPANIES ACT, 1956, AND HAVING ITS'S REGISTERED OFFICE AT RELIABLE HOUSE, SITUATED AT HANUMAN SILK MILL COMPOUND, KANJURMARG (WEST), OPP. HUMA MALL, MUMBAI-400 078 MAHARASHTRA, INDIA.		
DATE OF REGISTRATION	30/09/2013	
TITLE	TEXTILE FABRIC	
PRIORITY NA		
DESIGN NUMBER	194817	
CLASS	19-99	
1)MERZ & KRELL GMBH & CO. KGAA BAHNHOFSTRASSE 76, 64401 GROSS-BIEBERAU, GERMANY.		
DATE OF REGISTRATION	11/03/2004	
TITLE	COMPONENT OF WRITING	
PRIORITY NA		

DESIGN NUMBER	252849	
CLASS	10-01	
1)AJANTA LIMITED, AN INDIAN COMPANY OF ORPAT INDUSTRIAL ESTATE, RAJKOT-MORBI HIGHWAY, MORBI 363641, STATE OF GUJARAT, INDIA		
DATE OF REGISTRATION	03/04/2013	
TITLE	CLOCK	
PRIORITY NA		

DESIGN NUMBER	252013	
CLASS	26-05	
1)KONINKLIJKE PHILIPS ELECTRONICS N.V., A COMPANY ORGANIZED AND EXISTING UNDER THE LAWS OF THE KINGDOM OF THE NETHERLANDS, RESIDING AT EINDHOVEN, WHOSE POST-OFFICE ADDRESS IS HIGH TECH CAMPUS 5, 5656 AE EINDHOVEN, THE NETHERLANDS		
DATE OF REGISTRATION	04/03/2013	
TITLE	LED LIGHT	
PRIORITY		

PRIORITY NUMBER	DATE	COUNTRY
002096834-0002	04/09/2012	OHIM

DESIGN NUMBER	256850	
CLASS	10-04	
1)FREEMANS MEASURES PVT. LTD, AN INDIAN COMPANY, G. T. ROAD, JUGIANA, LUDHIANA - 141117, PUNJAB, INDIA, AN INDIAN COMPANY		
DATE OF REGISTRATION	27/09/2013	
TITLE	MEASURING TAPE	
PRIORITY NA		

DESIGN NUMBER	252478
CLASS	10-02
1)TURLEN HOLDING SA, A SWISS COMPANY, C/O SIPO S.A., CHEMIN DU CHÂTEAU 26A, 2805 SOYHIÈRES, SWITZERLAND	
DATE OF REGISTRATION	20/03/2013
TITLE	WATCH

PRIORITY

PRIORITY NUMBER	DATE	COUNTRY
699496001	25/10/2012	WIPO

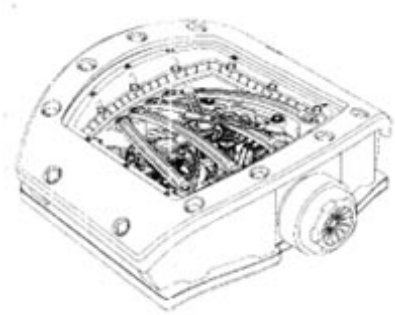

DESIGN NUMBER	255300
CLASS	06-03
1)KISH HANDICRAFTS PRIVATE LIMITED, AN INDIAN COMPANY, OF D-174, SECTOR 63, NOIDA, U. P.-201301, INDIA	
DATE OF REGISTRATION	17/07/2013
TITLE	TABLE

PRIORITY NA

DESIGN NUMBER	255375
CLASS	09-03
1)PANASONIC CORPORATION, A JAPANESE COMPANY ORGANIZED AND EXISTING UNDER THE LAWS OF JAPAN, OF 1006, OAZA KADOMA, KADOMA-SHI, OSAKA 571-8501, JAPAN	
DATE OF REGISTRATION	23/07/2013
TITLE	PACKAGE BOX

PRIORITY

PRIORITY NUMBER	DATE	COUNTRY
A00201300175	23/01/2013	INDONESIA

DESIGN NUMBER	254923
CLASS	09-01
1)JAGATJIT INDUSTRIES LIMITED, A COMPANY INCORPORATED UNDER THE INDIAN COMPANIES ACT, 1956, INDIAN COMPANY, P.O. JAGATJIT NAGAR-144802, DISTRICT-KAPURTHALA, PUNJAB	
DATE OF REGISTRATION	02/07/2013
TITLE	BOTTLE
PRIORITY NA	

DESIGN NUMBER	255022
CLASS	16-02
1)SHARP KABUSHIKI KAISHA, 22-22, NAGAIKE-CHO, ABENO-KU, OSAKA, JAPAN	
DATE OF REGISTRATION	05/07/2013
TITLE	VIDEO PROJECTOR

PRIORITY

PRIORITY NUMBER	DATE	COUNTRY
2013-000149	09/01/2013	JAPAN

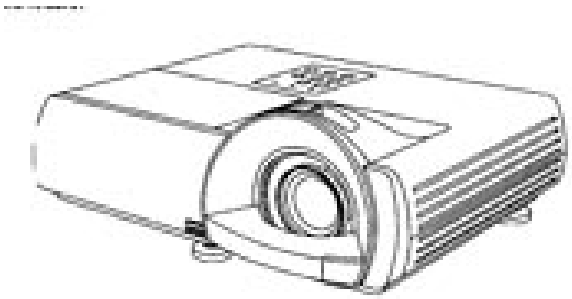

DESIGN NUMBER	255039
CLASS	19-06
1)JOYFUL PLASTICS PRIVATE LIMITED, A COMPANY REGISTERED IN INDIA, HAVING ITS REGISTERED OFFICE AT 20, A/F, NEW EMPIRE INDUSTRIAL ESTATE, KONDIVITA ROAD, J.B. NAGAR, ANDHERI (E), MUMBAI-400059, STATE OF MAHARASHTRA, INDIA, OF ABOVE ADDRESS	
DATE OF REGISTRATION	05/07/2013
TITLE	PENCIL BOX
PRIORITY NA	

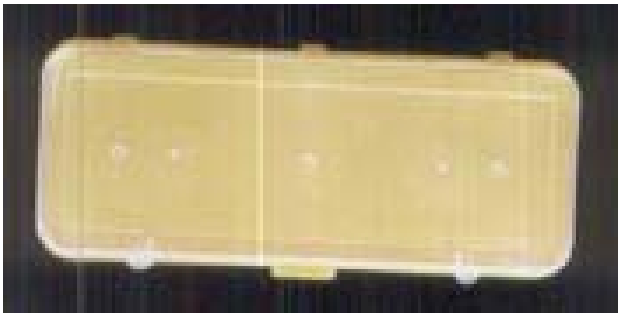

DESIGN NUMBER	255380	
CLASS	09-01	
1)VARDHMAN PLASTOCHEM PVT. LTD., (AN INDIAN PRIVATE LIMITED COMPANY REGISTERED UNDER THE INDIAN COMPANIES ACT, 1956), OF 'KASTURI' SANGHAVI CORPORATE PARK, GOVANDI (EAST), MUMBAI-400088. MAHARASHTRA, INDIA		
DATE OF REGISTRATION	23/07/2013	
TITLE	BOTTLE	
PRIORITY NA		
DESIGN NUMBER	255406	
CLASS	08-06	
1)(1) RAMESHBHAI PANCHABHAI PAMBHAR (2) MAGANBHAI PANCHABHAI PAMBHAR (3) TRIBHOVANBHAI PANCHABHAI PAMBHAR (ALL THE PARTNERS ARE ADULT & INDIAN NATIONALS) PARTNERS OF SHREE KHODIYAR INDUSTRIES (INDIAN PARTNERSHIP FIRM) HAVING PLACE OF BUSINESS 2/8, GOKUL NAGAR, 50, FEET ROAD, RAJKOT-360002 GUJARAT-(INDIA)		
DATE OF REGISTRATION	26/07/2013	
TITLE	HANDLE	
PRIORITY NA		
DESIGN NUMBER	255506	
CLASS	07-02	
1)AMRAPALI PLASTIC INDUSTRIES, 5, RASIK APPARTMENT, OFF. AAREY ROAD, GOREGAON (EAST), MUMBAI - 400063, INDIAN NATIONAL, STATE OF MAHARASHTRA, (INDIA), AN INDIAN PARTNERSHIP FIRM, WHOSE PARTNERS ARE (1) RAVJI JETHALAL CHHEDA. (2) SATISH RAVJI CHHEDA. INDIAN NATIONALS, OF ABOVE ADDRESS		
DATE OF REGISTRATION	30/07/2013	
TITLE	HANDLE FOR UTENSILS	
PRIORITY NA		

DESIGN NUMBER	255519	
CLASS	06-06	
1)M/S GHP AUTO INDUSTRIES, 145/3, STREET NO. 1, OPP PSEB OFFICE, GIASPURA ROAD, INDUSTRIAL AREA-C, LUDHIANA-141010 (PUNJAB) INDIA AN INDIAN PROPRIETORSHIP FIRM WHOSE PROPRIETOR IS:- SWARAN SINGH BEING INDIAN NATIONALS OF THE ABOVE ADDRESS		
DATE OF REGISTRATION	26/07/2013	
TITLE	LEGS FOR THE FOLDING COT	
PRIORITY NA		
DESIGN NUMBER	256903	
CLASS	05-05	
1)M/S. BIBA APPARELS PRIVATE LIMITED, AN INDIAN PRIVATE LIMITED COMPANY INCORPORATED UNDER THE PROVISION OF THE COMPANIES ACT, 1956, AND HAVING ITS'S REGISTERED OFFICE AT RELIABLE HOUSE, SITUATED AT HANUMAN SILK MILL COMPOUND, KANJURMARG (WEST), OPP. HUMA MALL, MUMBAI-400 078 MAHARASHTRA, INDIA.		
DATE OF REGISTRATION	30/09/2013	
TITLE	TEXTILE FABRIC	
PRIORITY NA		
DESIGN NUMBER	256912	
CLASS	05-05	
1)M/S. BIBA APPARELS PRIVATE LIMITED, AN INDIAN PRIVATE LIMITED COMPANY INCORPORATED UNDER THE PROVISION OF THE COMPANIES ACT, 1956, AND HAVING ITS'S REGISTERED OFFICE AT RELIABLE HOUSE, SITUATED AT HANUMAN SILK MILL COMPOUND, KANJURMARG (WEST), OPP. HUMA MALL, MUMBAI-400 078 MAHARASHTRA, INDIA.		
DATE OF REGISTRATION	30/09/2013	
TITLE	TEXTILE FABRIC	
PRIORITY NA		

DESIGN NUMBER	256922	
CLASS	05-05	
1)M/S. BIBA APPARELS PRIVATE LIMITED, AN INDIAN PRIVATE LIMITED COMPANY INCORPORATED UNDER THE PROVISION OF THE COMPANIES ACT, 1956, AND HAVING ITS'S REGISTERED OFFICE AT RELIABLE HOUSE, SITUATED AT HANUMAN SILK MILL COMPOUND, KANJURMARG (WEST), OPP. HUMA MALL, MUMBAI-400078 MAHARASHTRA, INDIA		
DATE OF REGISTRATION	30/09/2013	
TITLE	TEXTILE FABRIC	
PRIORITY NA		
DESIGN NUMBER	256935	
CLASS	05-05	
1)M/S. BIBA APPARELS PRIVATE LIMITED, AN INDIAN PRIVATE LIMITED COMPANY INCORPORATED UNDER THE PROVISION OF THE COMPANIES ACT, 1956, AND HAVING ITS'S REGISTERED OFFICE AT RELIABLE HOUSE, SITUATED AT HANUMAN SILK MILL COMPOUND, KANJURMARG (WEST), OPP. HUMA MALL, MUMBAI-400078 MAHARASHTRA, INDIA		
DATE OF REGISTRATION	30/09/2013	
TITLE	TEXTILE FABRIC	
PRIORITY NA		
DESIGN NUMBER	256964	
CLASS	05-05	
1)M/S. BIBA APPARELS PRIVATE LIMITED, AN INDIAN PRIVATE LIMITED COMPANY INCORPORATED UNDER THE PROVISION OF THE COMPANIES ACT, 1956, AND HAVING ITS'S REGISTERED OFFICE AT RELIABLE HOUSE, SITUATED AT HANUMAN SILK MILL COMPOUND, KANJURMARG (WEST), OPP. HUMA MALL, MUMBAI-400 078 MAHARASHTRA, INDIA.		
DATE OF REGISTRATION	30/09/2013	
TITLE	TEXTILE FABRIC	
PRIORITY NA		

DESIGN NUMBER	257052
CLASS	05-05
1)M/S. BIBA APPARELS PRIVATE LIMITED, AN INDIAN PRIVATE LIMITED COMPANY INCORPORATED UNDER THE PROVISION OF THE COMPANIES ACT, 1956, AND HAVING ITS'S REGISTERED OFFICE AT RELIABLE HOUSE, SITUATED AT HANUMAN SILK MILL COMPOUND, KANJURMARG (WEST), OPP. HUMA MALL, MUMBAI-400078 MAHARASHTRA, INDIA	
DATE OF REGISTRATION	30/09/2013
TITLE	TEXTILE FABRIC
PRIORITY NA	

DESIGN NUMBER	257060
CLASS	05-05
1)M/S. BIBA APPARELS PRIVATE LIMITED, AN INDIAN PRIVATE LIMITED COMPANY INCORPORATED UNDER THE PROVISION OF THE COMPANIES ACT, 1956, AND HAVING ITS'S REGISTERED OFFICE AT RELIABLE HOUSE, SITUATED AT HANUMAN SILK MILL COMPOUND, KANJURMARG (WEST), OPP. HUMA MALL, MUMBAI-400 078 MAHARASHTRA, INDIA.	
DATE OF REGISTRATION	30/09/2013
TITLE	TEXTILE FABRIC
PRIORITY NA	

DESIGN NUMBER	257068
CLASS	05-05
1)M/S. BIBA APPARELS PRIVATE LIMITED, AN INDIAN PRIVATE LIMITED COMPANY INCORPORATED UNDER THE PROVISION OF THE COMPANIES ACT, 1956, AND HAVING ITS'S REGISTERED OFFICE AT RELIABLE HOUSE, SITUATED AT HANUMAN SILK MILL COMPOUND, KANJURMARG (WEST), OPP. HUMA MALL, MUMBAI-400 078 MAHARASHTRA, INDIA.	
DATE OF REGISTRATION	30/09/2013
TITLE	TEXTILE FABRIC
PRIORITY NA	

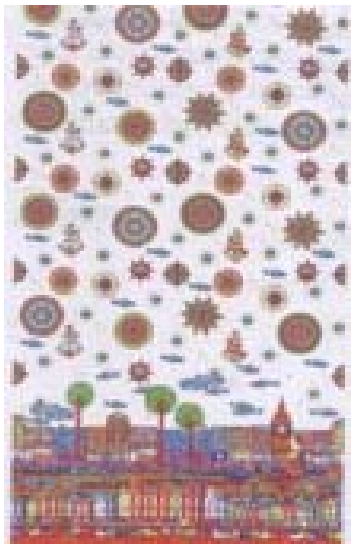

DESIGN NUMBER	252623
CLASS	13-03
1)TLV CO., LTD. A JAPANESE CORPORATION OF 881, NAGASUNA, NOGUCHICHO, KAKOGAWA-SHI, HYOGO 6758511, JAPAN	
DATE OF REGISTRATION	22/03/2013
TITLE	LIMIT SWITCH

PRIORITY

PRIORITY NUMBER	DATE	COUNTRY
2012-023377	26/09/2012	JAPAN

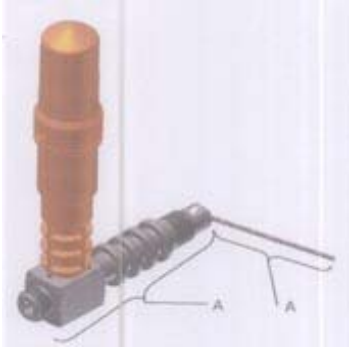

DESIGN NUMBER	255209
CLASS	23-02
1)RAJHANS CHEMICALS & PLASTIC INDUSTRIES, B-70/76, DSIDC INDUSTRIAL AREA, LAWRENCE ROAD, DELHI-110035, INDIA. (AN INDIAN PARTNERSHIP FIRM WHOSE PARTNERS ARE :- SH. SANJEEV JAIN AND SMT. SHAKUNTLA DEVI JAIN AN INDIAN NATIONAL OF THE ABOVE ADDRESS	
DATE OF REGISTRATION	12/07/2013
TITLE	BALLCOCK FOR FLUSHING CISTERN
PRIORITY NA	

DESIGN NUMBER	255228
CLASS	26-05
1)ZUMTOBEL LIGHTING GMBH OF GREVENMARSCHSTRAßE 74-78, 32657 LEMGO GERMANY; NATIONALITY: GERMAN	
DATE OF REGISTRATION	15/07/2013
TITLE	REFLECTOR FOR LUMINAIRE

PRIORITY

PRIORITY NUMBER	DATE	COUNTRY
001 364 624	20/03/2013	OHIM

DESIGN NUMBER	255297	
CLASS	26-05	
1)KISH HANDICRAFTS PRIVATE LIMITED, AN INDIAN COMPANY, OF D-174, SECTOR 63, NOIDA, U. P.-201301, INDIA		
DATE OF REGISTRATION	17/07/2013	
TITLE	LAMP STAND	
PRIORITY NA		

DESIGN NUMBER	255319	
CLASS	07-06	
1)MA DESIGN INDIA PRIVATE LIMITED, A COMPANY INCORPORATED IN INDIA HAVING ITS PRINCIPAL PLACE OF BUSINESS AT A-41, SECTOR-80, PHASE-II, NOIDA-201305, U.P. INDIA		
DATE OF REGISTRATION	18/07/2013	
TITLE	DISH HOLDER	
PRIORITY NA		

DESIGN NUMBER	255367	
CLASS	18-02	
1)KYOCERA DOCUMENT SOLUTIONS INC., A COMPANY DULY ORGANIZED AND EXISTING UNDER THE LAWS OF JAPAN, OF THE ADDRESS 1-2-28, TAMATSUKURI, CHUO-KU, OSAKA-SHI, OSAKA 540-8585, JAPAN		
DATE OF REGISTRATION	22/07/2013	
TITLE	TONER CARTRIDGE	
PRIORITY		

PRIORITY NUMBER	DATE	COUNTRY
2013-006563	26/03/2013	JAPAN

DESIGN NUMBER	254910
CLASS	08-06
1)SANDIPBHAI VALJIBHAI SOJITRA (ADULT & INDIAN NATIONAL) PROPRIETOR OF BHAVYA TRADING (INDIAN PROPRIETORSHIP CONCERN) HAVING PLACE OF BUSINESS AT-P-93, RAM NAGAR-1, OPP: GEL DIAMOND, KOTHARIYA CHOWKADI, RAJKOT-360002-GUJARAT-(INDIA)	
DATE OF REGISTRATION	02/07/2013
TITLE	HANDLE
PRIORITY NA	

DESIGN NUMBER	254999
CLASS	14-03
1)NEC CORPORATION, A JAPANESE COMPANY OF 7-1, SHIBA 5-CHOME, MINATO-KU, TOKYO, JAPAN	
DATE OF REGISTRATION	04/07/2013
TITLE	WIRELESS COMMUNICATION REPEATER
PRIORITY	

PRIORITY NUMBER	DATE	COUNTRY
2013-001118	23/01/2013	JAPAN

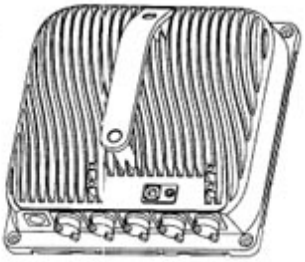

DESIGN NUMBER	255045
CLASS	08-06
1)AMITBHAI M. CHOVATIYA AND ASHISHBHAI G. GADHIYA BOTH INDIAN NATIONAL PARTNERS OF FORAM SALES CORPORATION AN INDIAN PARTNERSHIP FIRM HAVING ITS PRINCIPAL PLACE OF BUSINESS AT PLOT NO. 7, PATEL IND. AREA, OPP. RIDDHI SIDDHI PARK, NEAR SANDHIYA POOL, (KOTHARIYA), RAJKOT, GUJARAT-INDIA	
DATE OF REGISTRATION	05/07/2013
TITLE	HANDLE
PRIORITY NA	

DESIGN NUMBER	255875
CLASS	05-05
1)PARRY MURRAY & CO. LTD., COMPANY REGISTERED UNDER THE LAWS OF ENGLAND AND WALES, HAVING ITS PRINCIPAL PLACE OF BUSINESS AT 3RD FLOOR, SIMPSON HOUSE, 6 CHERRY ORCHARD ROAD, CROYDON, CRO 6BA, UNITED KINGDOM	
DATE OF REGISTRATION	16/08/2013
TITLE	TEXTILE FABRIC
PRIORITY NA	

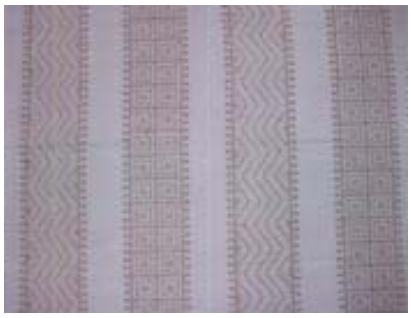

DESIGN NUMBER	255515
CLASS	09-01
1)MASTER WARE PLAST PRIVATE LIMITED, A COMPANY INCORPORATION UNDER THE COMPANIES ACT, 1956, HAVING PRINCIPAL PLACE OF BUSINESS AT 230, SARAMJIVINAGAR, NEAR SHAKRIBA PARTY PLOT, C. T. M., AMRAIWADI, AHMEDABAD-380026, GUJARAT STATE, INDIA	
DATE OF REGISTRATION	26/07/2013
TITLE	BOTTLE
PRIORITY NA	

DESIGN NUMBER	255525
CLASS	09-03
1)PUNEET DUGGAL, DEEPAK DUGGAL AND MANJU DUGGAL (DIRECTOR), NATIONALITY INDIAN TRADING AS KAP CONES PVT. LTD. (THIS IS PVT. LTD COMPANY), NATIONALITY INDIAN. WHOES ADDRESS IS A-31/4, MAYAPURI INDUSTRIAL AREA, PHASE-I, NEW DELHI-110064	
DATE OF REGISTRATION	30/07/2013
TITLE	CONTAINER
PRIORITY NA	

DESIGN NUMBER	256917	
CLASS	05-05	
1)M/S. BIBA APPARELS PRIVATE LIMITED, AN INDIAN PRIVATE LIMITED COMPANY INCORPORATED UNDER THE PROVISION OF THE COMPANIES ACT, 1956, AND HAVING ITS'S REGISTERED OFFICE AT RELIABLE HOUSE, SITUATED AT HANUMAN SILK MILL COMPOUND, KANJURMARG (WEST), OPP. HUMA MALL, MUMBAI-400078 MAHARASHTRA, INDIA		
DATE OF REGISTRATION	30/09/2013	
TITLE	TEXTILE FABRIC	
PRIORITY NA		
DESIGN NUMBER	256928	
CLASS	05-05	
1)M/S. BIBA APPARELS PRIVATE LIMITED, AN INDIAN PRIVATE LIMITED COMPANY INCORPORATED UNDER THE PROVISION OF THE COMPANIES ACT, 1956, AND HAVING ITS'S REGISTERED OFFICE AT RELIABLE HOUSE, SITUATED AT HANUMAN SILK MILL COMPOUND, KANJURMARG (WEST), OPP. HUMA MALL, MUMBAI-400 078 MAHARASHTRA, INDIA.		
DATE OF REGISTRATION	30/09/2013	
TITLE	TEXTILE FABRIC	
PRIORITY NA		
DESIGN NUMBER	256952	
CLASS	05-05	
1)M/S. BIBA APPARELS PRIVATE LIMITED, AN INDIAN PRIVATE LIMITED COMPANY INCORPORATED UNDER THE PROVISION OF THE COMPANIES ACT, 1956, AND HAVING ITS'S REGISTERED OFFICE AT RELIABLE HOUSE, SITUATED AT HANUMAN SILK MILL COMPOUND, KANJURMARG (WEST), OPP. HUMA MALL, MUMBAI-400 078 MAHARASHTRA, INDIA.		
DATE OF REGISTRATION	30/09/2013	
TITLE	TEXTILE FABRIC	
PRIORITY NA		

DESIGN NUMBER	256969	
CLASS	05-05	
1)M/S. BIBA APPARELS PRIVATE LIMITED, AN INDIAN PRIVATE LIMITED COMPANY INCORPORATED UNDER THE PROVISION OF THE COMPANIES ACT, 1956, AND HAVING ITS'S REGISTERED OFFICE AT RELIABLE HOUSE, SITUATED AT HANUMAN SILK MILL COMPOUND, KANJURMARG (WEST), OPP. HUMA MALL, MUMBAI-400078 MAHARASHTRA, INDIA		
DATE OF REGISTRATION	30/09/2013	
TITLE	TEXTILE FABRIC	
PRIORITY NA		
DESIGN NUMBER	257002	
CLASS	05-05	
1)M/S. BIBA APPARELS PRIVATE LIMITED, AN INDIAN PRIVATE LIMITED COMPANY INCORPORATED UNDER THE PROVISION OF THE COMPANIES ACT, 1956, AND HAVING ITS'S REGISTERED OFFICE AT RELIABLE HOUSE, SITUATED AT HANUMAN SILK MILL COMPOUND, KANJURMARG (WEST), OPP. HUMA MALL, MUMBAI-400078 MAHARASHTRA, INDIA		
DATE OF REGISTRATION	30/09/2013	
TITLE	TEXTILE FABRIC	
PRIORITY NA		
DESIGN NUMBER	257057	
CLASS	05-05	
1)M/S. BIBA APPARELS PRIVATE LIMITED, AN INDIAN PRIVATE LIMITED COMPANY INCORPORATED UNDER THE PROVISION OF THE COMPANIES ACT, 1956, AND HAVING ITS'S REGISTERED OFFICE AT RELIABLE HOUSE, SITUATED AT HANUMAN SILK MILL COMPOUND, KANJURMARG (WEST), OPP. HUMA MALL, MUMBAI-400078 MAHARASHTRA, INDIA.		
DATE OF REGISTRATION	30/09/2013	
TITLE	TEXTILE FABRIC	
PRIORITY NA		

DESIGN NUMBER	257065	
CLASS	05-05	
1)M/S. BIBA APPARELS PRIVATE LIMITED, AN INDIAN PRIVATE LIMITED COMPANY INCORPORATED UNDER THE PROVISION OF THE COMPANIES ACT, 1956, AND HAVING ITS'S REGISTERED OFFICE AT RELIABLE HOUSE, SITUATED AT HANUMAN SILK MILL COMPOUND, KANJURMARG (WEST), OPP. HUMA MALL, MUMBAI-400 078 MAHARASHTRA, INDIA.		
DATE OF REGISTRATION	30/09/2013	
TITLE	TEXTILE FABRIC	
PRIORITY NA		
DESIGN NUMBER	252697	
CLASS	23-04	
1)HAVELLS INDIA LIMITED HAVING REGISTERED OFFICE AT 1, RAJ NARAIN MARG, CIVIL LINES, DELHI-110054, INDIA		
DATE OF REGISTRATION	28/03/2013	
TITLE	FAN	
PRIORITY NA		
DESIGN NUMBER	252610	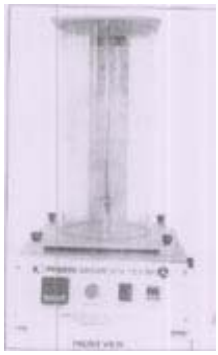
CLASS	10-05	
1)PRESTO STANTEST PRIVATE LIMITED OF I-42A, DLF INDUSTRIAL AREA, PHASE-1, DELHI MATHURA ROAD, FARIDABAD-121003, INDIA, A COMPANY REGISTERED AND EXISTING UNDER THE LAWS OF INDIA		
DATE OF REGISTRATION	22/03/2013	
TITLE	SECURE SEAL TESTER	
PRIORITY NA		

DESIGN NUMBER	255135
CLASS	12-08
1)VOLVO TRUCK CORPORATION, OF 40508 GOTEBORG, SWEDEN	
DATE OF REGISTRATION	11/07/2013
TITLE	VEHICLE CAB

PRIORITY

PRIORITY NUMBER	DATE	COUNTRY
002179242-0001	06/02/2013	OHIM

DESIGN NUMBER	255284
CLASS	08-06
1)BHARATBHAI BHURABHAI DOMADIA AND KALPESHBHAI VELJIBHAI DOMADIA BOTH INDIAN NATIONAL PARTNERS OF APEX TECHNO CAST AN INDIAN PARTNERSHIP FIRM HAVING ITS PRINCIPAL PLACE OF BUSINESS AT 5, AJI VASAHAT, OPP. WESTERN MINERAL, 80 FEET ROAD, RAJKOT, GUJARAT-INDIA	
DATE OF REGISTRATION	17/07/2013
TITLE	HANDLE

PRIORITY NA

DESIGN NUMBER	255311
CLASS	06-07
1)MA DESIGN INDIA PRIVATE LIMITED, A COMPANY INCORPORATED IN INDIA HAVING ITS PRINCIPAL PLACE OF BUSINESS AT A-41, SECTOR-80, PHASE-II, NOIDA-201305, U.P. INDIA	
DATE OF REGISTRATION	18/07/2013
TITLE	PHOTO FRAME

PRIORITY NA

DESIGN NUMBER	255353
CLASS	06-03
1)GOEL SCIENTIFIC GLASS WORKS LIMITED, A COMPANY INCORPORATED UNDER THE INDIAN COMPANIES ACT, AT C-31/A, SARDAR ESTATE, AJWA ROAD, VADODARA-390 019, GUJARAT, INDIA.	
DATE OF REGISTRATION	19/07/2013
TITLE	TABLE
PRIORITY NA	

DESIGN NUMBER	255023
CLASS	16-02
1)SHARP KABUSHIKI KAISHA, 22-22, NAGAIKE-CHO, ABENO-KU, OSAKA, JAPAN	
DATE OF REGISTRATION	05/07/2013
TITLE	VIDEO PROJECTOR
PRIORITY	

PRIORITY NUMBER	DATE	COUNTRY
2013-000150	09/01/2013	JAPAN

DESIGN NUMBER	255040
CLASS	07-02
1)1) MR. JAGDISH BOHRA 2) MRS. KANTA JAGDISH BOHRA 3) MR. SUDHIR JAGDISH BOHRA 4) MRS. SHWETA SUDHIR BOHRA AND 5) MRS. SUNIL JAGDISH BOHRA, PARTNERS-INDIAN NATIONAL, TRADING AS MULTI COLOUR PACKS, A REGISTERED PARTNERSHIP FIRM IN INDIA, HAVING ITS REGISTERED OFFICE AT PLOT NO. 257/8, MAHESHWARI WADI, NEAR FIRE STATION, SOMNATH ROAD, DAMAN (U.T.) 396210, INDIA, OF ABOVE ADDRESS	
DATE OF REGISTRATION	05/07/2013
TITLE	CASSEROLE
PRIORITY NA	

DESIGN NUMBER	255057	
CLASS	26-05	
1)THRIVE SOLAR ENERGY PVT. LTD., (INCORPORATED UNDER THE COMPANIES ACT, 1956) HAVING OFFICE AT PLOT NO. 121/3, EASTERN PART, PHASE II, SECTOR-I, LANE-9, IDA CHERLAPALLY, HYDERABAD-500051 (A.P.), INDIA, INDIAN COMPANY AT THE ABOVE ADDRESS		
DATE OF REGISTRATION	08/07/2013	
TITLE	LAMP	
PRIORITY NA		
DESIGN NUMBER	255079	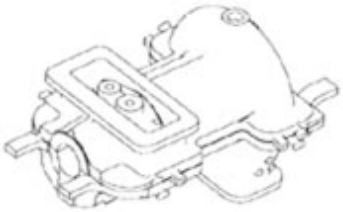
CLASS	15-01	
1)TRIVENI TURBINE LIMITED, AN INDIAN COMPANY HAVING ITS PLACE OF BUSINESS AT 12A, PEENYA INDUSTRIAL AREA, BANGLORE-560058		
DATE OF REGISTRATION	09/07/2013	
TITLE	STEAM CASING OF A BACK PRESSURE TURBINE	
PRIORITY NA		
DESIGN NUMBER	254686	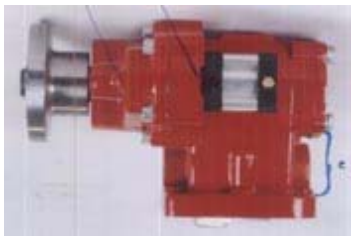
CLASS	15-01	
1)SURESH JAMES WILLIAMS, AN INDIAN NATIONAL, WHOSE ADDRESS IS NO: 63, K. G. LAYOUT, BHARATHI PARK, 8TH CROSS, COIMBATORE-641011, TAMILNADU, INDIA		
DATE OF REGISTRATION	24/06/2013	
TITLE	GEAR BOX	
PRIORITY NA		

DESIGN NUMBER	255871	
CLASS	05-05	
1)PARRY MURRAY & CO. LTD., COMPANY REGISTERED UNDER THE LAWS OF ENGLAND AND WALES, HAVING ITS PRINCIPAL PLACE OF BUSINESS AT 3RD FLOOR, SIMPSON HOUSE, 6 CHERRY ORCHARD ROAD, CROYDON, CRO 6BA, UNITED KINGDOM		
DATE OF REGISTRATION	16/08/2013	
TITLE	TEXTILE FABRIC	
PRIORITY NA		
DESIGN NUMBER	255388	
CLASS	23-01	
1)M/S SUDAMA INDUSTRIES INDIA FOCAL POINT, UDYOG NAGAR, MAIN MARKET, GADAIPUR, JALANDHAR CITY, PUNJAB, INDIA, AN INDIAN PROPRIETORSHIP FIRM WHOSE PROPRIETOR IS SH. ANIL KUMAR SINGH AN INDIAN OF THE ABOVE ADDRESS		
DATE OF REGISTRATION	22/07/2013	
TITLE	TAP	
PRIORITY NA		
DESIGN NUMBER	255407	
CLASS	08-06	
1)DINESHBHAI SUGNOMAL BHAGCHANDANI (ADULT AND INDIAN NATIONALS) AND SOLE PROPRIETOR OF GURUNANAK WATCH CASES & HARDWARE (INDIAN PROPRIETORSHIP CONCERN) HAVING PLACE OF BUSINESS AT - 6, PATEL NAGAR, 80 FEET ROAD, ANAND MANGAL BUILDING, RAJKOT-360002, GUJARAT (INDIA)		
DATE OF REGISTRATION	26/07/2013	
TITLE	HANDLE	
PRIORITY NA		

DESIGN NUMBER	255433
CLASS	12-15

1)SUMITOMO RUBBER INDUSTRIES, LTD.
6-9, WAKINOHAMA-CHO 3-CHOME, CHUO-KU, KOBE-SHI, HYOGO 651-0072, JAPAN, A JAPANESE COMPANY

DATE OF REGISTRATION	22/07/2013
TITLE	TIRE FOR AUTOMOBILE

PRIORITY

PRIORITY NUMBER	DATE	COUNTRY
2013-002860	14/02/2013	JAPAN

DESIGN NUMBER	255520
CLASS	06-02

1)M/S GHP AUTO INDUSTRIES, 145/3, STREET NO. 1, OPP PSEB OFFICE, GIASPURA ROAD, INDUSTRIAL AREA-C, LUDHIANA-141010 (PUNJAB) INDIA
AN INDIAN PROPRIETORSHIP FIRM WHOSE PROPRIETOR IS:- SWARAN SINGH BEING INDIAN NATIONALS OF THE ABOVE ADDRESS

DATE OF REGISTRATION	26/07/2013
TITLE	FOLDING COT

PRIORITY NA

DESIGN NUMBER	255534
CLASS	13-03

1)YAZAKI CORPORATION, A JAPANESE CORPORATION OF
4-28, MITA 1-CHOME, MINATO-KU, TOKYO 108-8333 JAPAN

DATE OF REGISTRATION	29/07/2013
TITLE	HOUSING FOR ELECTRIC CONNECTOR

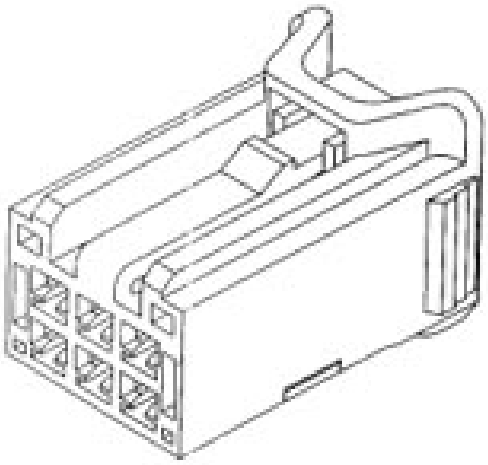

PRIORITY

PRIORITY NUMBER	DATE	COUNTRY
2013-003070	15/02/2013	JAPAN

DESIGN NUMBER	256904	
CLASS	05-05	
1)M/S. BIBA APPARELS PRIVATE LIMITED, AN INDIAN PRIVATE LIMITED COMPANY INCORPORATED UNDER THE PROVISION OF THE COMPANIES ACT, 1956, AND HAVING ITS'S REGISTERED OFFICE AT RELIABLE HOUSE, SITUATED AT HANUMAN SILK MILL COMPOUND, KANJURMARG (WEST), OPP. HUMA MALL, MUMBAI-400 078 MAHARASHTRA, INDIA.		
DATE OF REGISTRATION	30/09/2013	
TITLE	TEXTILE FABRIC	
PRIORITY NA		
DESIGN NUMBER	256913	
CLASS	05-05	
1)M/S. BIBA APPARELS PRIVATE LIMITED, AN INDIAN PRIVATE LIMITED COMPANY INCORPORATED UNDER THE PROVISION OF THE COMPANIES ACT, 1956, AND HAVING ITS'S REGISTERED OFFICE AT RELIABLE HOUSE, SITUATED AT HANUMAN SILK MILL COMPOUND, KANJURMARG (WEST), OPP. HUMA MALL, MUMBAI-400 078 MAHARASHTRA, INDIA.		
DATE OF REGISTRATION	30/09/2013	
TITLE	TEXTILE FABRIC	
PRIORITY NA		
DESIGN NUMBER	256965	
CLASS	05-05	
1)M/S. BIBA APPARELS PRIVATE LIMITED, AN INDIAN PRIVATE LIMITED COMPANY INCORPORATED UNDER THE PROVISION OF THE COMPANIES ACT, 1956, AND HAVING ITS'S REGISTERED OFFICE AT RELIABLE HOUSE, SITUATED AT HANUMAN SILK MILL COMPOUND, KANJURMARG (WEST), OPP. HUMA MALL, MUMBAI-400 078 MAHARASHTRA, INDIA.		
DATE OF REGISTRATION	30/09/2013	
TITLE	TEXTILE FABRIC	
PRIORITY NA		

DESIGN NUMBER	257025	
CLASS	05-05	
1)M/S. BIBA APPARELS PRIVATE LIMITED, AN INDIAN PRIVATE LIMITED COMPANY INCORPORATED UNDER THE PROVISION OF THE COMPANIES ACT, 1956, AND HAVING ITS'S REGISTERED OFFICE AT RELIABLE HOUSE, SITUATED AT HANUMAN SILK MILL COMPOUND, KANJURMARG (WEST), OPP. HUMA MALL, MUMBAI-400078 MAHARASHTRA, INDIA		
DATE OF REGISTRATION	30/09/2013	
TITLE	TEXTILE FABRIC	
PRIORITY NA		
DESIGN NUMBER	257069	
CLASS	05-05	
1)M/S. BIBA APPARELS PRIVATE LIMITED, AN INDIAN PRIVATE LIMITED COMPANY INCORPORATED UNDER THE PROVISION OF THE COMPANIES ACT, 1956, AND HAVING ITS'S REGISTERED OFFICE AT RELIABLE HOUSE, SITUATED AT HANUMAN SILK MILL COMPOUND, KANJURMARG (WEST), OPP. HUMA MALL, MUMBAI-400 078 MAHARASHTRA, INDIA.		
DATE OF REGISTRATION	30/09/2013	
TITLE	TEXTILE FABRIC	
PRIORITY NA		
DESIGN NUMBER	253928	
CLASS	08-08	
1)(1) MEHULBHAI D. CHAVDA (2) SOMESHBHAI S. MALIK AND (3) DHIRENBHAI SHAH ALL INDIAN NATIONAL PARTNER OF DMS ARCHITECTURAL PRODUCTS AN INDIAN PARTNERSHIP FIRM HAVING ITS PRINCIPAL PLACE OF BUSINESS AT ADDRESS: PLOT NO. 6, SURVEY NO. 20, EVEREST INDUSTRIAL AREA, NEAR PERFECT (TATA) SHOWROOM, NATIONAL HIGHWAY NO. 8-B, VAVDI-DIST. RAJKOT-360004, GUJARAT-INDIA		
DATE OF REGISTRATION	17/05/2013	
TITLE	CURTAIN BRACKET	
PRIORITY NA		

DESIGN NUMBER	254247	
CLASS	09-09	
1)NAVEEN CHAUHAN (DIRECTOR) IS INDIAN, TRADING AS KC GREEN REVOLUTION PVT. LTD. (THIS COMPANY IS SOLE PROPRIETORSHIP FIRM) WHOSE ADDRESS IS A-170, GROUND FLOOR, MAIN M. G. ROAD, AMBEDKAR COLONY, CHATTARPUR, NEW DELHI-110074		
DATE OF REGISTRATION	03/06/2013	
TITLE	DUST BIN	
PRIORITY NA		
DESIGN NUMBER	252612	
CLASS	10-05	
1)PRESTO STANTEST PRIVATE LIMITED OF I-42A, DLF INDUSTRIAL AREA, PHASE-1, DELHI MATHURA ROAD, FARIDABAD-121003, HARYANA, INDIA, A COMPANY DULY ORGANIZED AND EXISTING UNDER THE LAWS OF INDIA		
DATE OF REGISTRATION	22/03/2013	
TITLE	BOTTLE BURST TESTER-TOUCH SCREEN	
PRIORITY NA		
DESIGN NUMBER	255312	
CLASS	07-06	
1)MA DESIGN INDIA PRIVATE LIMITED, A COMPANY INCORPORATED IN INDIA HAVING ITS PRINCIPAL PLACE OF BUSINESS AT A-41, SECTOR-80, PHASE-II, NOIDA-201305, U.P. INDIA		
DATE OF REGISTRATION	18/07/2013	
TITLE	CASSEROLE HOLDER	
PRIORITY NA		

DESIGN NUMBER	255340
CLASS	06-01

1)EXCLUSIFF SEATING SYSTEMS, A REGISTERED PARTNERSHIP FIRM AT MITTAL IND. ESTATE, BLDG. NO 6, UNIT NO 149-150, ANDHERI KURLA ROAD, ANDHERI EAST, MUMBAI 400059, MAHARASHTRA, INDIA,
WHOSE PARTNERS ARE VICKY PARWANI AND KAMLESH PARWANI, BOTH INDIAN NATIONALS

DATE OF REGISTRATION	18/07/2013
TITLE	CHAIR

PRIORITY NA

DESIGN NUMBER	255025
CLASS	04-02

1)KONINKLIJKE PHILIPS N.V., A COMPANY ORGANIZED AND EXISTING UNDER THE LAWS OF THE KINGDOM OF THE NETHERLANDS, RESIDING AT EINDHOVEN,
WHOSE POST-OFFICE ADDRESS IS HIGH TECH CAMPUS 5, 5656 AE EINDHOVEN, THE NETHERLANDS

DATE OF REGISTRATION	05/07/2013
TITLE	BRUSH HEAD FOR ELECTRIC TOOTHBRUSH

PRIORITY

PRIORITY NUMBER	DATE	COUNTRY
002163675-0002	09/01/2013	OHIM

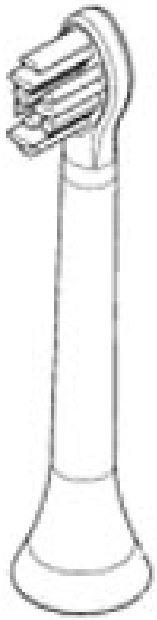

DESIGN NUMBER	255058
CLASS	26-05

1)THRIVE SOLAR ENERGY PVT. LTD., (INCORPORATED UNDER THE COMPANIES ACT, 1956) HAVING OFFICE AT
PLOT NO. 121/3, EASTERN PART, PHASE II, SECTOR-I, LANE-9, IDA CHERLAPALLY, HYDERABAD-500051 (A.P.), INDIA, INDIAN COMPANY AT THE ABOVE ADDRESS

DATE OF REGISTRATION	08/07/2013
TITLE	LAMP

PRIORITY NA

DESIGN NUMBER	253389	
CLASS	09-01	
1)M/S EMAMI LIMITED, A COMPANY INCORPORATED UNDER INDIAN COMPANIES ACT, 1956 HAVING ITS REGISTERED OFFICE ADDRESS AT 687, ANANDAPUR, EM BYPASS, KOLKATA-700107, INDIA BY NATIONALITY INDIAN		
DATE OF REGISTRATION	23/04/2013	
TITLE	BOTTLE WITH CAP	
PRIORITY NA		
DESIGN NUMBER	253476	
CLASS	08-06	
1)M/S GODANI METAL CO., B-14, INDUSTRIAL ESTATE, ALIGARH-202001 (UTTAR PRADESH), AN INDIAN PARTNERSHIP FIRM WHOSE PARTNERS ARE SH. RAJNEESH GODANI AND SH. RAVI MAHESHWARI (INDIAN NATIONALS)		
DATE OF REGISTRATION	29/04/2013	
TITLE	HANDLE	
PRIORITY NA		
DESIGN NUMBER	253192	
CLASS	08-07	
1)RAHUL GUPTA AN INDIAN CITIZEN, RESIDING AT HOUSE NO. 83, POCKET H-19, SECTOR-7, ROHINI, DELHI-110085, INDIA		
DATE OF REGISTRATION	17/04/2013	
TITLE	RAIL CLIP	
PRIORITY NA		

DESIGN NUMBER	255521	
CLASS	06-02	
1)M/S GHP AUTO INDUSTRIES, 145/3, STREET NO. 1, OPP PSEB OFFICE, GIASPURA ROAD, INDUSTRIAL AREA-C, LUDHIANA-141010 (PUNJAB) INDIA AN INDIAN PROPRIETORSHIP FIRM WHOSE PROPRIETOR IS:- SWARAN SINGH BEING INDIAN NATIONALS OF THE ABOVE ADDRESS		
DATE OF REGISTRATION	26/07/2013	
TITLE	FOLDING COT	
PRIORITY NA		
DESIGN NUMBER	256905	
CLASS	05-05	
1)M/S. BIBA APPARELS PRIVATE LIMITED, AN INDIAN PRIVATE LIMITED COMPANY INCORPORATED UNDER THE PROVISION OF THE COMPANIES ACT, 1956, AND HAVING ITS'S REGISTERED OFFICE AT RELIABLE HOUSE, SITUATED AT HANUMAN SILK MILL COMPOUND, KANJURMARG (WEST), OPP. HUMA MALL, MUMBAI-400 078 MAHARASHTRA, INDIA.		
DATE OF REGISTRATION	30/09/2013	
TITLE	TEXTILE FABRIC	
PRIORITY NA		
DESIGN NUMBER	256914	
CLASS	05-05	
1)M/S. BIBA APPARELS PRIVATE LIMITED, AN INDIAN PRIVATE LIMITED COMPANY INCORPORATED UNDER THE PROVISION OF THE COMPANIES ACT, 1956, AND HAVING ITS'S REGISTERED OFFICE AT RELIABLE HOUSE, SITUATED AT HANUMAN SILK MILL COMPOUND, KANJURMARG (WEST), OPP. HUMA MALL, MUMBAI-400078 MAHARASHTRA, INDIA		
DATE OF REGISTRATION	30/09/2013	
TITLE	TEXTILE FABRIC	
PRIORITY NA		

DESIGN NUMBER	256925	
CLASS	05-05	
1)M/S. BIBA APPARELS PRIVATE LIMITED, AN INDIAN PRIVATE LIMITED COMPANY INCORPORATED UNDER THE PROVISION OF THE COMPANIES ACT, 1956, AND HAVING ITS'S REGISTERED OFFICE AT RELIABLE HOUSE, SITUATED AT HANUMAN SILK MILL COMPOUND, KANJURMARG (WEST), OPP. HUMA MALL, MUMBAI-400078 MAHARASHTRA, INDIA		
DATE OF REGISTRATION	30/09/2013	
TITLE	TEXTILE FABRIC	
PRIORITY NA		
DESIGN NUMBER	256949	
CLASS	05-05	
1)M/S. BIBA APPARELS PRIVATE LIMITED, AN INDIAN PRIVATE LIMITED COMPANY INCORPORATED UNDER THE PROVISION OF THE COMPANIES ACT, 1956, AND HAVING ITS'S REGISTERED OFFICE AT RELIABLE HOUSE, SITUATED AT HANUMAN SILK MILL COMPOUND, KANJURMARG (WEST), OPP. HUMA MALL, MUMBAI-400 078 MAHARASHTRA, INDIA.		
DATE OF REGISTRATION	30/09/2013	
TITLE	TEXTILE FABRIC	
PRIORITY NA		
DESIGN NUMBER	256966	
CLASS	05-05	
1)M/S. BIBA APPARELS PRIVATE LIMITED, AN INDIAN PRIVATE LIMITED COMPANY INCORPORATED UNDER THE PROVISION OF THE COMPANIES ACT, 1956, AND HAVING ITS'S REGISTERED OFFICE AT RELIABLE HOUSE, SITUATED AT HANUMAN SILK MILL COMPOUND, KANJURMARG (WEST), OPP. HUMA MALL, MUMBAI-400 078 MAHARASHTRA, INDIA.		
DATE OF REGISTRATION	30/09/2013	
TITLE	TEXTILE FABRIC	
PRIORITY NA		

DESIGN NUMBER	257017	
CLASS	05-05	
1)M/S. BIBA APPARELS PRIVATE LIMITED, AN INDIAN PRIVATE LIMITED COMPANY INCORPORATED UNDER THE PROVISION OF THE COMPANIES ACT, 1956, AND HAVING ITS'S REGISTERED OFFICE AT RELIABLE HOUSE, SITUATED AT HANUMAN SILK MILL COMPOUND, KANJURMARG (WEST), OPP. HUMA MALL, MUMBAI-400078 MAHARASHTRA, INDIA		
DATE OF REGISTRATION	30/09/2013	
TITLE	TEXTILE FABRIC	
PRIORITY NA		
DESIGN NUMBER	257062	
CLASS	05-05	
1)M/S. BIBA APPARELS PRIVATE LIMITED, AN INDIAN PRIVATE LIMITED COMPANY INCORPORATED UNDER THE PROVISION OF THE COMPANIES ACT, 1956, AND HAVING ITS'S REGISTERED OFFICE AT RELIABLE HOUSE, SITUATED AT HANUMAN SILK MILL COMPOUND, KANJURMARG (WEST), OPP. HUMA MALL, MUMBAI-400 078 MAHARASHTRA, INDIA.		
DATE OF REGISTRATION	30/09/2013	
TITLE	TEXTILE FABRIC	
PRIORITY NA		