पेटेंट कार्यालय
शासकीय जर्नल

OFFICIAL JOURNAL
OF
THE PATENT OFFICE

निर्गमन सं. 51/2014	शुक्रवार	दिनांक: 19/12/2014
ISSUE NO. 51/2014	FRIDAY	DATE: 19/12/2014

पेटेंट कार्यालय का एक प्रकाशन

PUBLICATION OF THE PATENT OFFICE

INTRODUCTION

In view of the recent amendment made in the Patents Act, 1970 by the Patents (Amendment) Act, 2005 effective from 01st January 2005, the Official Journal of The Patent Office is required to be published under the Statute. This Journal is being published on weekly basis on every Friday covering the various proceedings on Patents as required according to the provision of Section 145 of the Patents Act 1970. All the enquiries on this Official Journal and other information as required by the public should be addressed to the Controller General of Patents, Designs & Trade Marks. Suggestions and comments are requested from all quarters so that the content can be enriched.

(**Chaitanya Prasad**)
CONTROLLER GENERAL OF PATENTS, DESIGNS & TRADE MARKS

19th DECEMBER, 2014

CONTENTS

SUBJECT		*PAGE NUMBER*
JURISDICTION	:	**15282 – 15283**
SPECIAL NOTICE	:	**15284 – 15285**
EARLY PUBLICATION (DELHI)	:	**15286 – 15291**
EARLY PUBLICATION (CHENNAI)	:	**15292 – 15311**
EARLY PUBLICATION (KOLKATA)	:	**15312 – 15313**
PUBLICATION AFTER 18 MONTHS (DELHI)	:	**15314 – 16973**
PUBLICATION AFTER 18 MONTHS (CHENNAI)	:	**16974 – 17356**
PUBLICATION AFTER 18 MONTHS (KOLKATA)	:	**17357 – 17495**
UNDER SEC.78(4) & RULE 123 (KOLKATA)	:	**17496**
PUBLICATION U/R 84(3) IN RESPECT OF APPLICATION FOR RESTORATION OF PATENT (KOLKATA)	:	**17497**
PUBLICATION UNDER SECTION 43(2) IN RESPECT OF THE GRANT (DELHI)	:	**17498 – 17501**
PUBLICATION UNDER SECTION 43(2) IN RESPECT OF THE GRANT (MUMBAI)	:	**17502**
PUBLICATION UNDER SECTION 43(2) IN RESPECT OF THE GRANT (CHENNAI)	:	**17503 – 17505**
PUBLICATION UNDER SECTION 43(2) IN RESPECT OF THE GRANT (KOLKATA)	:	**17506 – 17508**
INTRODUCTION TO DESIGN PUBLICATION	:	**17509**
THE DESIGNS ACT 2000 SECTION 30 DESIGN ASSIGNMENT	:	**17510**
CANCELLATION PROCEEDINGS UNDER SECTION 19 OF THE DESIGNS ACT, 2000	:	**17511 – 17512**
COPYRIGHT PUBLICATION	:	**17513 – 17514**
REGISTRATION OF DESIGNS	:	**17515 - 17580**

THE PATENT OFFICE
KOLKATA, 19/12/2014
Address of the Patent Offices/Jurisdictions
The following are addresses of all the Patent Offices located at different places having their Territorial Jurisdiction on a Zonal basis as shown below:-

1	Office of the Controller General of Patents, Designs & Trade Marks, Boudhik Sampada Bhavan, Near Antop Hill Post Office,S.M.Road,Antop Hill, Mumbai – 400 037 Phone: (91)(22) 24123311, Fax : (91)(22) 24123322 E-mail: cgpdtm@nic.in	4	The Patent Office, Government of India, Intellectual Property Rights Building, G.S.T. Road, Guindy, Chennai – 600 032. Phone: (91)(44) 2250 2081-84 Fax : (91)(44) 2250 2066 E-mail: chennai-patent@nic.in ❖ The States of Andhra Pradesh, Karnataka, Kerala, Tamil Nadu and the Union Territories of Puducherry and Lakshadweep.
2	The Patent Office, Government of India, Boudhik Sampada Bhavan, Near Antop Hill Post Office,S.M.Road,Antop Hill, Mumbai – 400 037 Phone: (91)(22) 24137701 Fax: (91)(22) 24130387 E-mail: mumbai-patent@nic.in ❖ The States of Gujarat, Maharashtra, Madhya Pradesh, Goa and Chhattisgarh and the Union Territories of Daman and Diu & Dadra and Nagar Haveli	5	The Patent Office (Head Office), Government of India, Boudhik Sampada Bhavan, CP-2, Sector –V, Salt Lake City, Kolkata- 700 091 Phone: (91)(33) 2367 1943/44/45/46/87 Fax: (91)(33) 2367 1988 E-Mail: kolkata-patent@nic.in ❖ Rest of India
3	The Patent Office, Government of India, Boudhik Sampada Bhavan, Plot No. 32., Sector-14, Dwarka, New Delhi – 110075 Phone: (91)(11) 2808 1921 – 25 Fax: (91)(11) 2808 1920 & 2808 1940 E.mail: delhi-patent@nic.in ❖ The States of Haryana, Himachal Pradesh, Jammu and Kashmir, Punjab, Rajasthan, Uttar Pradesh, Uttaranchal, Delhi and the Union Territory of Chandigarh.		

Website: www.ipindia.nic.in
www.patentoffice.nic.in

All applications, notices, statements or other documents or any fees required by the Patents Act, 1970 and The Patents (Amendment) Act, 2005 or by the Patents (Amendment) Rules, 2006 will be received only at the appropriate offices of the Patent Office.

Fees: The Fees may either be paid in cash or may be sent by Bank Draft or Cheques payable to the Controller of Patents drawn on a scheduled Bank at the place where the appropriate office is situated.

पेटेंट कार्यालय

कोलकाता, दिनांक 19/12/2014

कार्यालयों के क्षेत्राधिकार के पते

विभिन्न जगहों पर स्थित पेटेंट कार्यालय के पते आंचलिक आधार पर दर्शित उनके प्रादेशिक अधिकार क्षेत्र के साथ नीचे दिए गए है:-

1	कार्यालय : महानियंत्रक, एकस्व, अभिकल्प तथा व्यापार चिह्न, एंटोप हिल डाकघर के समीप, एस. एम. रोड, एंटोप हिल, मुम्बई- 400 037, भारत, फोन: (91) (22) 24123311 फ़ैक्स: (91) (22) 24123322 ई. मेल: cgpdtm@nic.in	4	पेटेंट कार्यालय, भारत सरकार इंटेलेक्चुअल प्रॉपर्टी राइट्स बिल्डिंग, इंडस्ट्रियल इस्टेट एसआईडीसीओ आरएमडी गोडाउन एरिया एडजसेन्ट टु ईगल फ्लास्क, जी. एस. टी. रोड, गायन्डी चेन्नई - 600 032. फोन: (91)(44) 2250 2081-84 फ़ैक्स: (91)(44) 2250-2066 ई. मेल: chennai-patent@nic.in ❖ आन्ध्र प्रदेश, कर्नाटक, केरल, तमिलनाडु तथा पुडुचेरी राज्य क्षेत्र एवं संघ शासित क्षेत्र, लक्षदीप
2	पेटेंट कार्यालय, भारत सरकार बौद्धिक संपदा भवन, एंटोप हिल डाकघर के समीप, एस. एम. रोड, एंटोप हिल, मुम्बई- 400 037, फोन: (91) (22) 24137701 फ़ैक्स: (91) (22) 24130387 ई. मेल: Mumbai-patent@nic.in ❖ गुजरात, महाराष्ट्र, मध्य प्रदेश, गोवा तथा छत्तीसगढ़ राज्य क्षेत्र एवं संघ शासित क्षेत्र, दमन तथा दीव, दादर और नगर हवेली.	5	पेटेंट कार्यालय, भारत सरकार कोलकाता, (प्रधान कार्यालय) बौद्धिक संपदा भवन, सीपी-2, सेक्टर- V, साल्ट लेक सिटी, कोलकाता-700 091, भारत. फोन: (91)(33) 2367 1943/44/45/46/87 फ़ैक्स:/Fax: (91)(33) 2367 1988 ई. मेल: kolkata-patent@nic.in ❖ भारत का अवशेष क्षेत्र
3	पेटेंट कार्यालय, भारत सरकार बौद्धिक संपदा भवन, प्लॉट सं. 32, सेक्टर- 14, द्वारका, नई दिल्ली- 110 075. फोन: (91)(11) 2808 1921-25 फ़ैक्स: (91)(11) 2808 1920, 2808 1940 ई. मेल: delhi-patent@nic.in हरियाणा, हिमाचल प्रदेश, जम्मू तथा कश्मीर, पंजाब,राजस्थान, उत्तर प्रदेश, दिल्ली तथा उत्तरांचल राज्य क्षेत्रों, एवं संघ शासित क्षेत्र चंडीगढ़		

वेबसाइट: **http://www.ipindia.nic.in**

www.patentoffice.nic.in

पेटेंट अधिनियम, 1970 तथा पेटेंट (संशोधन) अधिनियम, 2005 अथवा पेटेंट (संशोधन) नियम, 2006 द्वारा वांछित सभी आवेदन, सूचनाए, विवरण या अन्य दस्तावेज़ या कोई शुल्क पेटेंट कार्यालय के केवल उपयुक्त कार्यालय में स्वीकृत होंगे।

शुल्क: शुल्क या तो नगद रूप में या Controller of Patents के नाम में देय बैंक ड्राफ्ट या चेक के द्वारा भेजी जा सकती है जो उसी स्थान के किसी अनुसूचित बैंक में प्रदत्त हो जहाँ उपयुक्त कार्यालय स्थित है ।

SPECIAL NOTICE

18 Months publication as required under Section 11A of the Patents Act, 1970 as amended by the Patents (Amendment) Act, 2005.

Notice is hereby given that any person at any time before the grant of Patent may give representation by way of opposition to the Controller of Patents at appropriate office on the ground and in a manner specified under section 25(1) of the Patents (Amendment) Act, 2005 read with Rule 55 of the Patents (Amendment) Rules, 2006.

Notice is also given that if any interested person requests for copies of the complete specification, drawing and abstract of any application already published, the photocopy of the same can be supplied by the Patent Office as per the jurisdiction on payment of prescribed fees of Rs.8/- per page. If any further details are required to be obtained, the same can be provided by the respective Patent Offices on request.

(**Chaitanya Prasad**)
CONTROLLER GENERAL OF PATENTS, DESIGNS & TRADE MARKS

SPECIAL NOTICE

Under the new provision of the Patents Act, 1970 as amended by the Patents (Amendment) Act, 2005 and Rules there under, Publication of the matter relating to Patents in the Official Gazette of India Part III, Section 2 has been discontinued and instead The Official Journal of the Patent Office is being published containing all the activities of The Patent Office such as publication of all the patent applications after 18th months , grant of patents & all other information in respect of the proceedings as required under the provisions of the Patents (Amendment) Act, 2005 and Rules thereunder on weekly basis on every **Friday**.

The Journal is uploaded in the website every Friday. So Paper form and CD-ROM form of the Journal are discontinued from 01/01/2009.

SPECIAL NOTICE

Every effort is being taken to publish all the patent applications under section 11(A) of the Patents Act. However, if duplication of publication of any application is found, then earlier date of publication will be taken for the purpose of provisional protection for applicant and Patent Office will grant Patent not before six months from the date of second publication, provided that there is there is no third party representation.

Early Publication:

The following patent applications have been published under section 11A (2) of The Patents (Amendment) Act 2005 and rule 24A of The Patents (Amendment) Rules, 2006. Any person may file representation by way of opposition to the Controller of Patents at the appropriate office against the grant of the patent in the prescribed manner under section 25(1) of the Patents (Amendment) Act 2005 read with the rule 55 of The Patents (Amendment) Rules, 2006:

(12) PATENT APPLICATION PUBLICATION

(21) Application No.3394/DEL/2014 A

(19) INDIA

(22) Date of filing of Application :21/11/2014

(43) Publication Date : 19/12/2014

(54) Title of the invention : MOTORIZED SURGICAL INSTRUMENT WITH REPLACEABLE WORKING MEMBERS

(51) International classification	:A61B17/072
(31) Priority Document No	:NA
(32) Priority Date	:NA
(33) Name of priority country	:NA
(86) International Application No	:NA
Filing Date	:NA
(87) International Publication No	: NA
(61) Patent of Addition to Application Number	:NA
Filing Date	:NA
(62) Divisional to Application Number	:
Filed on	:01/01/1900

(71)**Name of Applicant :**

1)SUDHIR PREM SRIVASTAVA

Address of Applicant :4805, BRAIWOOD AVE, APT-201, MIDLAND, TEXAS-79707, U.S.A.

(72)**Name of Inventor :**

1)SUDHIR PREM SRIVASTAVA

2)DAN WALLACE

3)PERUMALSAMY SUGUMAR

(57) Abstract :

In one embodiment of the invention, a motorized surgical instrument including an elongated shaft, a wrist member and a pair of working members with at least one working member moveable relative to other working member between open and closed position, is presented. the elongate shaft includes towards its proximal end a carriage plate that enables independent and controlled motion of the surgical instrument employing plurality of actuators securely held therein. further, disclosed is a surgical instrument enabling easy and quick replacement of working members.

No. of Pages : 31 No. of Claims : 13

(12) PATENT APPLICATION PUBLICATION
(19) INDIA
(22) Date of filing of Application :22/01/2014
(21) Application No.205/DEL/2014 A
(43) Publication Date : 19/12/2014

(54) Title of the invention : GREEN CITY WITH TRAFFIC FREE LANES FOR EVERY HOUSE

(51) International classification :E01F9/06
(31) Priority Document No :NA
(32) Priority Date :NA
(33) Name of priority country :NA
(86) International Application No :NA
Filing Date :NA
(87) International Publication No : NA
(61) Patent of Addition to Application Number :NA
Filing Date :NA
(62) Divisional to Application Number :NA
Filing Date :NA

(71)**Name of Applicant :**
1)Parveen Singla
Address of Applicant :House No. 293, Sector 16-A, Faridabad Haryana India
(72)**Name of Inventor :**
1)Parveen Singla

(57) Abstract :
Described herein is a system to develop a traffic free sector/city. this embodiment suggest for a seperate lane for padestrians without any traffic,just as railway line is for trains. this padestrian lane will have seperate route in the whole city or sector and it will be accessible to every house and shopping establishment. this traffic free lane will be used for the daily routine jobs of the households such as walking, shopping, going to school or temple and also from one house to the other house. this padestrian lane will also be used for growing vegetables, fruits and flowers for fulfilling the needs of the households.

No. of Pages : 8 No. of Claims : 4

(12) PATENT APPLICATION PUBLICATION
(19) INDIA
(22) Date of filing of Application :20/10/2014
(21) Application No.2984/DEL/2014 A
(43) Publication Date : 19/12/2014

(54) Title of the invention : DUAL CHAMBER VARIABLE FLOW EXHAUST MUFFLER

(51) International classification :F01N1/16
(31) Priority Document No :NA
(32) Priority Date :NA
(33) Name of priority country :NA
(86) International Application No :NA
Filing Date :NA
(87) International Publication No : NA
(61) Patent of Addition to Application Number :NA
Filing Date :NA
(62) Divisional to Application Number :NA
Filing Date :NA

(71)**Name of Applicant :**
1)NAYYAR KARANDEEP SINGH
Address of Applicant :HOUSE NO. 439, PHASE-9 (SECTOR 63) MOHALI PIN- 160062 PUNJAB, INDIA
2)SINGH GAGANVEER
3)DR BELOKAR RAJENDRA M.
(72)**Name of Inventor :**
1)NAYYAR KARANDEEP SINGH
2)SINGH GAGANVEER
3)DR. BELOKAR RAJENDRA M.

(57) Abstract :
Dual Chamber Variable flow Exhaust Muffler is an automotive muffler developed to increase engine performance and efficiency as well as control noise level by regulating flow of exhaust gasses in muffler. This muffler combines both the design technology of the stock muffler and the performance muffler into one single compact unit. The exhaust gasses are provided with two passages inside the muffler. One passage is shorter and unrestricted while the other passage is longer and more restrictive to the gas flow. The proportion of exhaust gasses passing through the shorter passage is controlled by a motor operated butterfly valve in which the motor receives signals from the throttle position sensor of the vehicle. Therefore the valve opens and closes in proportion to the load on the engine, optimizing the back pressure from the muffler on the engine.

No. of Pages : 13 No. of Claims : 10

(12) PATENT APPLICATION PUBLICATION
(19) INDIA
(22) Date of filing of Application :17/12/2013
(21) Application No.10860/DELNP/2013 A
(43) Publication Date : 19/12/2014

(54) Title of the invention : METHOD AND SYSTEM FOR MAPPING A GEOLOGICAL STRUCTURE OF A FORMATION ON ONE SIDE OF A SURFACE USING MAGNETIC MOMENTS OF DIFFERENT VALUES

(51) International classification :G01V3/08
(31) Priority Document No :PA 2011 70327
(32) Priority Date :24/06/2011
(33) Name of priority country :Denmark
(86) International Application No :PCT/DK2012/050168
Filing Date :14/05/2012
(87) International Publication No :WO 2012/175088
(61) Patent of Addition to Application Number :NA
Filing Date :NA
(62) Divisional to Application Number :NA
Filing Date :NA

(71)**Name of Applicant :**
1)BUBIOIL APS
Address of Applicant :Blegindvej 102 Tiset DK 8362 H¸rning Denmark
(72)**Name of Inventor :**
1)SˇRENSEN Kurt

(57) Abstract :
This is solved according to the invention by one or more features. In one aspect, by a method for mapping a geologic - al structure in a formation on one side of a surface, and comprising a sequence lasting a sequence period and comprising at least one moment period with: - an on-period where a magnetic field is built up in the said formation by generating a magnetic moment, which magnetic moment has a moment strength, using at least one magnetic moment generator, which is positioned on the other side of the surface at a given position, which on-period is separated from an off-period by a step where - the magnetic field is brought to change o by changing the magnetic moment, and where - the off-period where at a recording time t record in a recording device at least one record is made, which record includes at least: - a representation of the change in the magnetic field and/or - a representation of the magnetic field obtained by a B/E-measuring unit, and where at least two sequences are performed where each sequence is performed o with different absolute values of moment strengths of magnetic moments and/or different on-time periods of magnetic moments and that the duration of the said least two sequences is less than 1 second.

No. of Pages : 46 No. of Claims : 15

(12) PATENT APPLICATION PUBLICATION
(19) INDIA
(22) Date of filing of Application :12/11/2014
(21) Application No.9519/DELNP/2014 A
(43) Publication Date : 19/12/2014

(54) Title of the invention : SPARK PLUG

(51) International classification :H01T13/32
(31) Priority Document No :2012111267
(32) Priority Date :15/05/2012
(33) Name of priority country :Japan
(86) International Application No :PCT/JP2013/002897
Filing Date :30/04/2013
(87) International Publication No :WO 2013/171992
(61) Patent of Addition to Application Number :NA
Filing Date :NA
(62) Divisional to Application Number :NA
Filing Date :NA

(71)**Name of Applicant :**
1)NGK SPARK PLUG CO. LTD.
Address of Applicant :14 18Takatsuji cho Mizuho ku Nagoya shi Aichi 4678525 Japan
(72)**Name of Inventor :**
1)KIKAI Takaaki

(57) Abstract :
The present invention reliably prevents the tip of a ground electrode from rising. The spark plug (1) is equipped with a ground electrode (27) that is bent at a bend section (27K). The ground electrode (27) is made of a metal that contains 93 % by mass or more of Ni. In a cross section that passes through the bend section (27K) at a position where the curvature radius of the central axis (CL2) of the ground electrode (27) is the smallest while perpendicularly intersecting with the central axis (CL2) the cross sectional area of the ground electrode (27) is set to 3.0 mm or smaller. In a cross section perpendicularly intersecting with the central axis (CL2) of the ground electrode (27) with regard to a crystal grain (X0) that overlaps with the center (CP) of a predetermined rectangle (SQ) and four crystal grains (X1 through X4) that overlap with respective midpoints (P1 through P4) of the respective constituent sides (L1 through L4) of the rectangle (SQ) when a maximum length of each crystal grain along the thickness direction of the ground electrode (27) is denoted as C (μm) and a maximum length along the width direction of the ground electrode (27) is denoted as B (μm) an average value of the ratio of B to C is set to between 1.5 and 10.

No. of Pages : 44 No. of Claims : 3

(12) PATENT APPLICATION PUBLICATION
(19) INDIA
(22) Date of filing of Application :20/11/2014
(21) Application No.3377/DEL/2014 A
(43) Publication Date : 19/12/2014

(54) Title of the invention : NANOCOMPOSITE COMPOSITIONS AND PROCESS FOR PREPARATION THEREOF

(51) International classification :C08L39/08
(31) Priority Document No :NA
(32) Priority Date :NA
(33) Name of priority country :NA
(86) International Application No :NA
Filing Date :NA
(87) International Publication No : NA
(61) Patent of Addition to Application Number :NA
Filing Date :NA
(62) Divisional to Application Number :NA
Filing Date :NA

(71)**Name of Applicant :**
1)EI DUPONT DE NEMOURS AND COMPANY
Address of Applicant :1007 Market Street, Wilmington, Delaware 19898, USA
(72)**Name of Inventor :**
1)Kumar Sandeep
2)Misra Rahul

(57) Abstract :
Nanocomposite compositions comprising polyvinyl butyral and nano-crystalline filler material comprising hydrophilic nanoparticles are provided herein. The nanocomposite compositions disclosed herein exhibits improved thermal properties such as low thermal conductivity and high thermal emissivity and can be used in automobile, construction, aviation, and/or aerospace industries.

No. of Pages : 56 No. of Claims : 26

(12) PATENT APPLICATION PUBLICATION
(21) Application No.5838/CHE/2014 A
(19) INDIA
(22) Date of filing of Application :21/11/2014
(43) Publication Date : 19/12/2014

(54) Title of the invention : SYSTEMS AND METHODS FOR EVALUATING A SOURCE CODE SCANNER

(51) International classification :g06q
(31) Priority Document No :14/276,218
(32) Priority Date :13/05/2014
(33) Name of priority country :India
(86) International Application No :NA
Filing Date :NA
(87) International Publication No : NA
(61) Patent of Addition to Application Number :NA
Filing Date :NA
(62) Divisional to Application Number :NA
Filing Date :NA

(71)**Name of Applicant :**
1)WIPRO LIMITED
Address of Applicant :Doddakannelli, Sarjapur Road, Bangalore 560035, Karnataka, India.
(72)**Name of Inventor :**
1)SOURAV SAM BHATTACHARYA

(57) Abstract :
Systems and methods for evaluating a source code scanner are described. In one implementation, the method comprises obtaining a source code. Further, the method comprises inserting one or more good code snippets and one or more bad code snippets into the source code to obtain a modified source code. Further, the method comprises obtaining an issue list, generated by the source code scanner upon scanning the modified source code. The issue list comprises code segments having security defects identified by the source code scanner, reasons for the security defects, and locations of the security defects in the modified source code. Further, the method comprises comparing the code segments, present in the issue list, with the one or more good code snippets and the one or more bad code snippets. Further, the method comprises generating a plurality of metrics, indicating quality of the source code scanner, based on the comparison.

No. of Pages : 28 No. of Claims : 13

(12) PATENT APPLICATION PUBLICATION
(19) INDIA
(22) Date of filing of Application :21/11/2014
(21) Application No.5839/CHE/2014 A
(43) Publication Date : 19/12/2014

(54) Title of the invention : METHOD AND SYSTEM FOR EXECUTING AUTOMATED TESTS IN AN INTEGRATED TEST ENVIRONMENT

(51) International classification :g06f
(31) Priority Document No :NA
(32) Priority Date :NA
(33) Name of priority country :NA
(86) International Application No :NA
Filing Date :NA
(87) International Publication No : NA
(61) Patent of Addition to Application Number :NA
Filing Date :NA
(62) Divisional to Application Number :NA
Filing Date :NA

(71)**Name of Applicant :**
1)WIPRO LIMITED
Address of Applicant :Doddakannelli, Sarjapur Road, Bangalore 560035, Karnataka, India.
(72)**Name of Inventor :**
1)GIRISH RAGHAVAN
2)GANESH NARAYAN
3)THAMILCHELVI PETERBARNABAS

(57) Abstract :
The present subject matter relates to a method and system for executing automated tests in an integrated test environment comprising plurality of test environments. The test management module configured in the system creates one or more test sets by grouping the one or more test cases received from the input module. The control module determines status of the test environment for executing each test set. If the test environment is available then the corresponding test set is executed and if the test environment is not available an order of execution of the test sets is rearranged. The status of the test environment is checked after a predetermined time interval and if the test environment is not available, the control module determines the availability of the virtual response for providing virtual service. If the test environment is not available the control module creates a ticket indicating failure of the test environment.

No. of Pages : 34 No. of Claims : 17

(12) PATENT APPLICATION PUBLICATION
(19) INDIA
(22) Date of filing of Application :26/11/2014
(21) Application No.5916/CHE/2014 A
(43) Publication Date : 19/12/2014

(54) Title of the invention : A METHOD AND SYSTEM FOR AUTOMATICALLY GENERATING A TEST ARTIFACT

(51) International classification :g06f
(31) Priority Document No :NA
(32) Priority Date :NA
(33) Name of priority country :NA
(86) International Application No :NA
Filing Date :NA
(87) International Publication No : NA
(61) Patent of Addition to Application Number :NA
Filing Date :NA
(62) Divisional to Application Number :NA
Filing Date :NA

(71)**Name of Applicant :**
1)WIPRO LIMITED
Address of Applicant :Doddakannelli, Sarjapur Road, Bangalore 560035, Karnataka, India.
(72)**Name of Inventor :**
1)KRISHNARAJ PADUR KRISHNAN
2)HEMANTHA KUMAR CHOUDAM

(57) Abstract :
A method of automatically generating a test artifact is disclosed. The method involves executing a business process comprising one or more web services; monitoring the business process to identify process modules of the business process invoking the at least one web service, wherein the one or more process modules invoking the at least one web service corresponds to one or more integration points; mapping the one or more integration points to one or more corresponding nodes of a business process model associated with the business process; mapping data parameters associated with each node upstream of the one or more mapped nodes of the business process model to one or more request data fields of a test script; and generating, by the hardware processor, the test artifact by automatically populating the request data fields with test data corresponding to the data parameters associated with the one or more request data fields.

No. of Pages : 24 No. of Claims : 21

(12) PATENT APPLICATION PUBLICATION
(21) Application No.5919/CHE/2014 A
(19) INDIA
(22) Date of filing of Application :26/11/2014
(43) Publication Date : 19/12/2014

(54) Title of the invention : METHOD AND SYSTEM FOR DETERMINING PSYCHOLOGICAL DISORDER CONDITION IN A PERSON AND PROVIDING ASSISTANCE THEREFOR

(51) International classification	:a61b	(71)**Name of Applicant :**
(31) Priority Document No	:NA	**1)WIPRO LIMITED**
(32) Priority Date	:NA	Address of Applicant :Doddakannelli, Sarjapur Road,
(33) Name of priority country	:NA	Bangalore 560035, Karnataka, India.
(86) International Application No	:NA	(72)**Name of Inventor :**
Filing Date	:NA	**1)UPENDRA SUDDAMALLA**
(87) International Publication No	: NA	**2)SATISH PRASAD RATH**
(61) Patent of Addition to Application Number	:NA	
Filing Date	:NA	
(62) Divisional to Application Number	:NA	
Filing Date	:NA	

(57) Abstract :
The present subject matter relates to a method and system for determining psychological disorder condition in a person and providing assistance to the person with the psychological disorder. One or more sensors are placed on the person to monitor the activities of the person. The one or more sensors provide sensor data associated with the monitored activities of the person to a computing unit. The computing unit detects the activities and identifies a recurring activity. For the recurring activity, the computing unit determines probability parameters and based on the probability parameters the probability of the psychological condition is determined. For providing assistance to the person with psychological disorder condition, the computing compares the activity with the disorder activities stored in the computing unit. If a match is found, then one or more indications are provided to the person to indicate that the activity has already been performed.

No. of Pages : 38 No. of Claims : 16

(12) PATENT APPLICATION PUBLICATION
(19) INDIA
(22) Date of filing of Application :21/11/2014
(21) Application No.5840/CHE/2014 A
(43) Publication Date : 19/12/2014

(54) Title of the invention : METHOD AND SYSTEM FOR MIGRATING AN INTERFACE

(51) International classification :g06f
(31) Priority Document No :NA
(32) Priority Date :NA
(33) Name of priority country :NA
(86) International Application No :NA
Filing Date :NA
(87) International Publication No : NA
(61) Patent of Addition to Application Number :NA
Filing Date :NA
(62) Divisional to Application Number :NA
Filing Date :NA

(71)**Name of Applicant :**
1)WIPRO LIMITED
Address of Applicant :Doddakannelli, Sarjapur Road, Bangalore 560035, Karnataka, India.
(72)**Name of Inventor :**
1)SANKARA SUBRAMANIAN PALANISAMY
2)ANAND KRISHNAMURTHY

(57) Abstract :
Embodiments of this disclosure relate to methods and systems for migrating an interface. One disclosed method may include discovering types associated with a plurality of source middleware nodes, and discovering one or more links between them. It may include mapping the plurality of source middleware nodes to nodes of a global middleware model based on the types, wherein the global middleware model comprises a format interoperable between a source middleware platform and a target middleware platform. It may further include establishing one or more links between the nodes of the global middleware model based on the one or more links between the plurality of source middleware nodes. It may also include migrating the nodes of the global middleware model and the one or more links between the nodes of the global middleware model to the target middleware platform based on mapping the global middleware model to the target middleware platform.

No. of Pages : 30 No. of Claims : 15

(12) PATENT APPLICATION PUBLICATION
(19) INDIA
(22) Date of filing of Application :21/11/2014
(21) Application No.8499/CHENP/2014 A
(43) Publication Date : 19/12/2014

(54) Title of the invention : ELECTRONIC CHALKBOARD SYSTEM AND CONTROL METHOD THEREOF AND DISPLAY APPARATUS

(51) International classification :B43L1/00,G02F1/13
(31) Priority Document No :1020120063069
(32) Priority Date :13/06/2012
(33) Name of priority country :Republic of Korea
(86) International Application No :PCT/KR2013/003583
Filing Date :25/04/2013
(87) International Publication No :WO 2013/187599
(61) Patent of Addition to Application Number :NA
Filing Date :NA
(62) Divisional to Application Number :NA
Filing Date :NA

(71)**Name of Applicant :**
1)SAMSUNG ELECTRONICS CO. LTD.
Address of Applicant :129 Samsung ro Yeongtong gu Suwon si Gyeonggi do 443 742 Republic of Korea
(72)**Name of Inventor :**
1)CHOI Hyun mook

(57) Abstract :
An electronic chalkboard system including: a plurality of display panels; a pointing device which touches the plurality of panels; an image processor which processes an image to be displayed on one of the plurality of panels that is drawn by the pointing device touching the one of the plurality of panels; a controller which selects one of the plurality of panels according to a preset condition based on a first panel of the plurality of panels if the first panel is touched by the pointing device and controls the image processor to display on the selected panel a menu related to the image displayed on the first panel; and wherein if a second panel of the plurality of panels is touched by the pointing device while the menu is displayed on the selected panel the controller newly selects one of the plurality of panels according to the preset condition based on the second panel and transfers the displayed menu to the newly selected panel.

No. of Pages : 29 No. of Claims : 15

(12) PATENT APPLICATION PUBLICATION
(19) INDIA
(22) Date of filing of Application :25/11/2014
(21) Application No.5908/CHE/2014 A
(43) Publication Date : 19/12/2014

(54) Title of the invention : METHOD AND SYSTEM FOR AUTHENTICATING ACCESS TO A COMPUTING DEVICE

(51) International classification :g06f
(31) Priority Document No :NA
(32) Priority Date :NA
(33) Name of priority country :NA
(86) International Application No :NA
Filing Date :NA
(87) International Publication No : NA
(61) Patent of Addition to Application Number :NA
Filing Date :NA
(62) Divisional to Application Number :NA
Filing Date :NA

(71)**Name of Applicant :**
1)WIPRO LIMITED
Address of Applicant :Doddakannelli, Sarjapur Road, Bangalore 560035, Karnataka, India.
(72)**Name of Inventor :**
1)NARASIMHA RAO VENKATA DONGALA

(57) Abstract :
Embodiments of the present disclosure disclose a method and a system for authenticating access to a computing device. The method comprises providing a user interface on a display of the computing device. The user interface comprises a grid comprising a plurality of colorable grid cells and a plurality of colors to be filled in the plurality of colorable grid cells. The method further comprises receiving a pattern from the user, wherein the pattern comprises of a plurality of colored grid cells and order of coloring of the plurality of colored grid cells. The method further comprises comparing the pattern received from the user with a predefined pattern. The method further comprises providing access to the computing device based on the comparison.

No. of Pages : 27 No. of Claims : 15

(12) PATENT APPLICATION PUBLICATION
(19) INDIA
(22) Date of filing of Application :14/08/2013
(21) Application No.3619/CHE/2013 A
(43) Publication Date : 19/12/2014

(54) Title of the invention : ROAD TRAFFIC DECELERATION ZONE ELECTRIC POWER GENERATING SYSTEM

(51) International classification :B60K
(31) Priority Document No :NA
(32) Priority Date :NA
(33) Name of priority country :NA
(86) International Application No :NA
Filing Date :NA
(87) International Publication No : NA
(61) Patent of Addition to Application Number :NA
Filing Date :NA
(62) Divisional to Application Number :NA
Filing Date :NA

(71)**Name of Applicant :**
1)A. ASLAM JAWEED
Address of Applicant :2/63, A.V. KRISHNASAMI STREET, JANAKI NAGAR, VALSARAVAKKAM, CHENNAI - 600 087 Tamil Nadu India
(72)**Name of Inventor :**
1)A. ASLAM JAWEED

(57) Abstract :
A road traffic deceleration zone electric power generating system and method for pumping oil from low pressure to high pressure when vehicles pass over the linking slats and converting lost energy of moving vehicles into electrical power. The system comprises an oil storage cum heat dissipating device, a pumping device, a high pressure storage device ! a hydro-motor control device and a hydraulic electric power generating device. The pumping device comprises a plurality of pairs of guided cylinder assemblies. Each pair of guided cylinder assemblies comprising a compounding of two hydraulic cylinders namely a pumping cylinder and a guide cum retract cylinder. Each pair of guided cylinder assembly is linked by a slat.

No. of Pages : 27 No. of Claims : 16

(12) PATENT APPLICATION PUBLICATION
(19) INDIA
(22) Date of filing of Application :17/11/2014
(21) Application No.5783/CHE/2014 A
(43) Publication Date : 19/12/2014

(54) Title of the invention : HYBRID AUTO RICKSHAW

(51) International classification :b60k
(31) Priority Document No :NA
(32) Priority Date :NA
(33) Name of priority country :NA
(86) International Application No :NA
Filing Date :NA
(87) International Publication No : NA
(61) Patent of Addition to Application Number :NA
Filing Date :NA
(62) Divisional to Application Number :NA
Filing Date :NA

(71)**Name of Applicant :**
1)Dr. S. SIVANAGARAJU
Address of Applicant :Professor, Department of Electrical and Electronics Engineering, University College of Engineering, JNTU Kakinada, Kakinada, Andhra Pradesh, India.
2)G. SRINIVASA RAO
(72)**Name of Inventor :**
1)Dr. S. SIVANAGARAJU
2)G. SRINIVASA RAO

(57) Abstract :
Exemplary embodiments of the present disclosure are directed towards a hybrid auto rickshaw comprising, a plurality of energy storage devices; a plurality of renewable energy generating sources; a voltage regulator to maintain constant voltage; a microcontroller equipped in a control unit for controlling the operations of hybrid auto rickshaw; a dynamo for converting the mechanical energy into electrical energy; an internal combustion engine; and an D.C motor connected to axle of the hybrid auto rickshaw.

No. of Pages : 11 No. of Claims : 10

(12) PATENT APPLICATION PUBLICATION
(19) INDIA
(22) Date of filing of Application :27/11/2014
(21) Application No.5957/CHE/2014 A
(43) Publication Date : 19/12/2014

(54) Title of the invention : AN AIR VENTILATION SYSTEM, INCORPORATED IN A VEHICLE

(51) International classification :f24f
(31) Priority Document No :NA
(32) Priority Date :NA
(33) Name of priority country :NA
(86) International Application No :NA
Filing Date :NA
(87) International Publication No : NA
(61) Patent of Addition to Application Number :NA
Filing Date :NA
(62) Divisional to Application Number :NA
Filing Date :NA

(71)**Name of Applicant :**
1)ASHOK KUMAR BHUKYA
Address of Applicant :C/o Vishnu Naik, Peddathanda Village, Gundrathi Madugu Post, Kurai Mandal, Warangal Dist, Telangana-506101, Telangana India
(72)**Name of Inventor :**
1)ASHOK KUMAR BHUKYA

(57) Abstract :
Exemplary embodiments of the present disclosure are directed an air ventilation system of a vehicle, the system includes one or more flip openings positioned at a front side of the vehicle for capturing natural air, one or more chambers configured to allow the air through the one or more flip openings, an air conditioner coupled to the one or more chambers through air ducts and two or more air filtration units positioned between the one or more chambers and one or more flip openings for filtering the captured natural air.

No. of Pages : 17 No. of Claims : 12

(12) PATENT APPLICATION PUBLICATION
(19) INDIA
(22) Date of filing of Application :26/11/2014
(21) Application No.5931/CHE/2014 A
(43) Publication Date : 19/12/2014

(54) Title of the invention : METHOD AND SYSTEM FOR DETERMINING SHELF LIFE OF A CONSUMABLE PRODUCT

(51) International classification :g06q
(31) Priority Document No :NA
(32) Priority Date :NA
(33) Name of priority country :NA
(86) International Application No :NA
Filing Date :NA
(87) International Publication No : NA
(61) Patent of Addition to Application Number :NA
Filing Date :NA
(62) Divisional to Application Number :NA
Filing Date :NA

(71)**Name of Applicant :**
1)WIPRO LIMITED
Address of Applicant :Doddakannelli, Sarjapur Road, Bangalore 560035, Karnataka, India.
(72)**Name of Inventor :**
1)UPENDRA SUDDAMALLA
2)ANANDARAJ THANGAPPAN

(57) Abstract :
A method and system for determining shelf life of a consumable product is disclosed. The system may comprise one or more activity monitoring sensors to detect an activity associated with the consumable product. The system may further comprise one or more quality sensors to collect quality data of the consumable product upon detecting the activity. The shelf life of the consumable product may then be determined based on the quality data of the consumable product.

No. of Pages : 23 No. of Claims : 16

(12) PATENT APPLICATION PUBLICATION
(19) INDIA
(22) Date of filing of Application :11/11/2014
(21) Application No.5681/CHE/2014 A
(43) Publication Date : 19/12/2014

(54) Title of the invention : DESIGN, SYNTHESIS AND CYTOTOXIC STUDIES OF PIPERAZINE DERIVATIVES AGAINST CANCER

(51) International classification :c07d403/00
(31) Priority Document No :NA
(32) Priority Date :NA
(33) Name of priority country :NA
(86) International Application No :NA
Filing Date :NA
(87) International Publication No : NA
(61) Patent of Addition to Application Number :NA
Filing Date :NA
(62) Divisional to Application Number :NA
Filing Date :NA

(71)**Name of Applicant :**
1)Uma Vuruputuri
Address of Applicant :Department of Chemistry, University College Of Science Osmania University, Tarnaka Hyderabad. Telangana India
2)Sarita Rajender Potlapally
3)Vasavi Malkhed
4)Kiran Kumar Mustyala
5)Ramasree Dullapally
6)V.G.M. Naidu
(72)**Name of Inventor :**
1)Uma Vuruputuri
2)Sarita Rajender Potlapally
3)Vasavi Malkhed
4)Kiran Kumar Mustyala
5)Ramasree Dullapally
6)V.G.M. Naidu

(57) Abstract :
Novel piperazine derivatives of formula (I) wherein --- represents a bond or no bond; Gr represents a group of formulae wherein R1 and R2 are same or different and independently selected from hydrogen, halogen, hydroxy, cyano, nitro, amino, amido, thio, azido, lower alkyl, lower alkyloxy, lower akanoyl, lower alkanoyloxy; or its pharmaceutically acceptable salts, solvates, polymorphs, tautomers, optical and geometric isomers thereof.

No. of Pages : 24 No. of Claims : 10

(12) PATENT APPLICATION PUBLICATION
(19) INDIA
(22) Date of filing of Application :19/11/2014

(21) Application No.5799/CHE/2014 A
(43) Publication Date : 19/12/2014

(54) Title of the invention : METHODS FOR PROCESSING CASHEW APPLES TO YIELD VALUE ADDED PRODUCTS

(51) International classification :a23l
(31) Priority Document No :NA
(32) Priority Date :NA
(33) Name of priority country :NA
(86) International Application No :NA
Filing Date :NA
(87) International Publication No : NA
(61) Patent of Addition to Application Number :NA
Filing Date :NA
(62) Divisional to Application Number :NA
Filing Date :NA

(71)**Name of Applicant :**
1)Dr. Uma Talasila
Address of Applicant :C/o M. Rama Subba Rao, Flat No.104, Sri Narayana Residency, Near Seetarama Kalyana Mandapam, Mandapeta-533308, East Godavari District, Andhra Pradesh, India.
(72)**Name of Inventor :**
1)Dr. Uma Talasila

(57) Abstract :
Exemplary embodiments of the present disclosure are directed towards methods for processing cashew apples to obtain different value added products such as syrup of cashew apples, ready-to-drink juice of cashew apples, carbonated cashew apple juice and cashew apple powder that can be preserved for a longer duration of time. The nutritional, medicinal and economic benefits of cashew apples are utilised to their full extent by such processing methods that are otherwise lost due to the highly perishable nature of cashew apples and their astringent taste.

No. of Pages : 20 No. of Claims : 12

(12) PATENT APPLICATION PUBLICATION
(19) INDIA
(22) Date of filing of Application :27/11/2014
(21) Application No.5961/CHE/2014 A
(43) Publication Date : 19/12/2014

(54) Title of the invention : IMPROVISED LATHE BED

(51) International classification :b23q
(31) Priority Document No :NA
(32) Priority Date :NA
(33) Name of priority country :NA
(86) International Application No :NA
Filing Date :NA
(87) International Publication No : NA
(61) Patent of Addition to Application Number :NA
Filing Date :NA
(62) Divisional to Application Number :NA
Filing Date :NA

(71)**Name of Applicant :**
1)Gedee Weiler Pvt. Ltd
Address of Applicant :Vellalore Road, Podanur P.O., COIMBATORE 641 023 Tamilnadu, India
(72)**Name of Inventor :**
1)Gopalasamy Doraisamy Rajkumar

(57) Abstract :
The invention concerns a lathe with carriage (28) guided on a bed (1) which can be moved into a z-direction by means of a motor (21) which drives a spindle (20) in order to increase its immunity to failure caused by any ingression of chips whatsoever it is hereby suggested in line with the invention that two shoulders (2,3) which run into a z-direction are provided at the two outer surfaces (A, A™) opposite to one another of bed (1) in x-direction and that on a supporting surface (4,5) facing a carriage (28) of every shoulder (2,3) a linear slideway extends into z-direction and that the carriage (28) is fitted on both linear slideways to be moved into z-direction.

No. of Pages : 18 No. of Claims : 12

(12) PATENT APPLICATION PUBLICATION
(19) INDIA
(22) Date of filing of Application :19/11/2014
(21) Application No.5813/CHE/2014 A
(43) Publication Date : 19/12/2014

(54) Title of the invention : SAFETY ISOLATION BAGS FOR INTRA ABDOMINAL, ENDOSCOPIC PROCEDURES, POWER MORCELLATION AND VAGINAL MORCELLATION

(51) International classification	:a61b
(31) Priority Document No	:NA
(32) Priority Date	:NA
(33) Name of priority country	:NA
(86) International Application No	:NA
Filing Date	:NA
(87) International Publication No	: NA
(61) Patent of Addition to Application Number	:NA
Filing Date	:NA
(62) Divisional to Application Number	:NA
Filing Date	:NA

(71)**Name of Applicant :**
1)JOSEPH, Lalu
Address of Applicant :13/756-A, Aradhana, Kunnel House, Thoppil, Thrikkakara P.O., Ernakulam - 682021, Kerala, India
(72)**Name of Inventor :**
1)JOSEPH, Lalu

(57) Abstract :
A Safety Isolation Bag for intra-abdominal, endoscopic procedures, power morcellation and vaginal morcellation for facilitating the safe removal of surgical specimen or body mass within the abdominal cavity or from anywhere in the body is disclosed. It is an inflatable pneumoperitoneum device comprising an expandable and collapsible enclosed internal space or cavity (4) having a neck portion (3a) with a mouth (3) made out of flexible biocompatible / medical grade plastic films, and normally kept in opened position by means of a flexible retainer ring (7) embedded at upper circumferential portion of the mouth. A primary instrument insertion sleeve (5) attached to the inner side of the bag at the mouth is provided with an inlet opening (6a) and outlet (6b) for introducing the surgical instruments and accessories into the enclosed internal space. A retractor means (2) attached to the periphery of the mouth of the bag to facilitate pulling out the bag through the incision made in the body.

No. of Pages : 31 No. of Claims : 20

(12) PATENT APPLICATION PUBLICATION
(19) INDIA
(22) Date of filing of Application :05/09/2014
(21) Application No.4365/CHE/2014 A
(43) Publication Date : 19/12/2014

(54) Title of the invention : RENEWABLE ENERGY CHARGING STATION CONNECTED WITH A POWER GRID FOR CHARGING ELECTRIC POWERED VEHICLES

(51) International classification :h02j
(31) Priority Document No :NA
(32) Priority Date :NA
(33) Name of priority country :NA
(86) International Application No :NA
Filing Date :NA
(87) International Publication No : NA
(61) Patent of Addition to Application Number :NA
Filing Date :NA
(62) Divisional to Application Number :NA
Filing Date :NA

(71)**Name of Applicant :**
1)Mr.TALLURI PRASAD
Address of Applicant :NO-45/26, MANO COMPLEX, ARCOT ROAD, VELLORE-632004, TAMIL NADU India
(72)**Name of Inventor :**
1)Mr.TALLURI PRASAD

(57) Abstract :
The present invention provides a renewable energy charging station connected with a power grid for charging electric powered vehicles. The renewable energy charging station includes a plurality of renewable energy sources, a power grid, an input electric meter, an output electric meter, a DC to AC converter, an inverter room and a charging station. A wind energy and/or solar energy station are connected to a power grid and the DC to AC converter is used to convert the DC power in to an alternating current. The input electric meter is present to measure the amount of electricity delivered to power grid. For transmitting power from power grid to charging station, the output electric meter is used for measuring an amount of electrical energy delivered to charging station. The inverter room includes an AC to DC converter and the charging area dispatches power to the charging station.

No. of Pages : 12 No. of Claims : 9

(12) PATENT APPLICATION PUBLICATION
(19) INDIA
(22) Date of filing of Application :20/09/2014
(21) Application No.4584/CHE/2014 A
(43) Publication Date : 19/12/2014

(54) Title of the invention : X-RAY COLLIMATOR MECHANISM WITH PRECISION APERTURE ADJUSTMENT

(51) International classification :g03b
(31) Priority Document No :NA
(32) Priority Date :NA
(33) Name of priority country :NA
(86) International Application No :NA
Filing Date :NA
(87) International Publication No : NA
(61) Patent of Addition to Application Number :NA
Filing Date :NA
(62) Divisional to Application Number :NA
Filing Date :NA

(71)**Name of Applicant :**
1)SKANRAY TECHNOLOGIES PVT. LTD.
Address of Applicant :Plot # 15-17 , Hebbal Industrial Area , Mysore 570016, State of Karnataka , India
(72)**Name of Inventor :**
1)HANJAR, Adarsh
2)SADASHIVA, Anukumar, Haranahalli
3)PRASAD, Hassan, Gurumurthy, Keshava

(57) Abstract :
The present invention relates generally to the field of shutter mechanisms for collimating x-rays. More specifically, the present invention discloses a compact shutter mechanism (202 & 204) allowing direct, independent control of two orthogonal sets of shutters. The shutter mechanisms (202 & 204) for x-ray collimators involve a unique set of design requirements. The exit aperture having a generally rectangular configuration defined by edges of two pairs of opposing shutter elements (202, 204 & 202-a, 204-a). The each pair of shutter (202 & 204) thereof being directly linked to elements (220,222,208,212,210,216 & 118) for corresponding movement therewith. The shutters are typically made of a radio-opaque material, such as lead. The present invention provides a clear, accurate definition of the X-ray field, even in conditions of high ambient light. The means of the present invention may be used as frequently or continuously as desired, without undesirable thermal or other effects or a lessening of service life.

No. of Pages : 44 No. of Claims : 43

(12) PATENT APPLICATION PUBLICATION
(19) INDIA
(22) Date of filing of Application :12/11/2014
(21) Application No.5687/CHE/2014 A
(43) Publication Date : 19/12/2014

(54) Title of the invention : A SINGLE COMPOSITE ROOF FRAME STRUCTURE

(51) International classification :b62d
(31) Priority Document No :NA
(32) Priority Date :NA
(33) Name of priority country :NA
(86) International Application No :NA
Filing Date :NA
(87) International Publication No : NA
(61) Patent of Addition to Application Number :NA
Filing Date :NA
(62) Divisional to Application Number :NA
Filing Date :NA

(71)**Name of Applicant :**
1)Daimler AG
Address of Applicant :70546, Stuttgart, Germany
(72)**Name of Inventor :**
1)Shreya HERLEKAR
2)Hartwig RENNINGER

(57) Abstract :
The present invention discloses a single roof frame structure for a vehicle which provides resistance to buckling or deformation of the roof in the event of collision. The roof frame structure of a vehicle comprises of a first portion (10), a second portion (20) and a third portion (30) to form the roof frame structure. The first portion (10) first portion (10) connects an upper end of a left A-pillar (12) and an upper end of a right A-pillar (12™) of the vehicle. The third portion (30) connects an upper end of a left C-pillar (14) and an upper end of a right C-pillar (14™) of the vehicle. The second portion (20) connects the first portion (10) and the third portion (30), wherein the first, second and third portions form a single roof frame structure (100). The roof frame structure may be made up of a sandwich composite.

No. of Pages : 12 No. of Claims : 3

(12) PATENT APPLICATION PUBLICATION
(19) INDIA
(22) Date of filing of Application :09/09/2014
(21) Application No.4404/CHE/2014 A
(43) Publication Date : 19/12/2014

(54) Title of the invention : A SYSTEM AND METHOD FOR AUTOMATICALLY CHARGING OF ELECTRICAL VEHICLES

(51) International classification :h02j
(31) Priority Document No :NA
(32) Priority Date :NA
(33) Name of priority country :NA
(86) International Application No :NA
Filing Date :NA
(87) International Publication No : NA
(61) Patent of Addition to Application Number :NA
Filing Date :NA
(62) Divisional to Application Number :NA
Filing Date :NA

(71)**Name of Applicant :**
1)DINGU PRADEEP KUMAR REDDY
Address of Applicant :D. No: 404/D, Sector 6, Steel Plant, Ukkunagaram, Visakhapatnam. Telangana India
(72)**Name of Inventor :**
1)DINGU PRADEEP KUMAR REDDY

(57) Abstract :
A system and method for automatically charging of electrical automobiles is disclosed. At least some aspects of the techniques may be facilitated by using an auto recharging circuit which determines power flow within the device by using two transformers step up and step down battery recharges is disclosed. An electric vehicle self-charging system and method comprising at least two external batteries, at least one relay box acts as an electrically operated switch to charge external batteries, an voltage regulator to transmit required power input to the components of the system, at least one step up transformer with an auto recharging circuit to transmit at least one required power level to a step down transformer, at least one auto changer circuit andthe auto changer circuit provided within the relay box automatically shifts a charging state of the external batteries simultaneously.

No. of Pages : 18 No. of Claims : 11

(12) PATENT APPLICATION PUBLICATION
(19) INDIA
(22) Date of filing of Application :15/09/2014
(21) Application No.4495/CHE/2014 A
(43) Publication Date : 19/12/2014

(54) Title of the invention : A NOVEL HUB DESIGN OF A WIND TURBINE TO GENERATE EFFICIENT POWER

(51) International classification	:f03d	(71)**Name of Applicant :**
(31) Priority Document No	:NA	**1)Mr.TALLURI PRASAD**
(32) Priority Date	:NA	Address of Applicant :NO-45/26, MANO COMPLEX,
(33) Name of priority country	:NA	ARCOT ROAD, VELLORE-632004, Tamil Nadu India
(86) International Application No	:NA	(72)**Name of Inventor :**
Filing Date	:NA	**1)Mr.TALLURI PRASAD**
(87) International Publication No	: NA	
(61) Patent of Addition to Application Number	:NA	
Filing Date	:NA	
(62) Divisional to Application Number	:NA	
Filing Date	:NA	

(57) Abstract :
The present invention provides a novel hub design of wind turbine to generate efficient power at low wind conditions. The novel hub design of the wind turbine utilizes a stationary plate and a rotary plate in a rotor for an effective utilization of wind power. The stationary plate of the wind turbine includes at least two pieces which are arranged adjacent to each other comprising a magnet having a south pole or north pole at one end and iron at an another end of the plate. The rotary plate includes at least two magnet pieces having a north pole and a south pole in the region of the plate. At times of low wind condition, the piece in the stationary plate pushes and pulls the magnets in the rotary plate and thus enables rotate the rotary plate and to generate sufficient wind power even at low wind conditions.

No. of Pages : 24 No. of Claims : 9

(12) PATENT APPLICATION PUBLICATION
(21) Application No.1376/KOL/2013 A
(19) INDIA
(22) Date of filing of Application :05/12/2013
(43) Publication Date : 19/12/2014

(54) Title of the invention : FOOT OPERATED MANUAL PAGE TURNING MACHINE.

(51) International classification :B41F21/00
(31) Priority Document No :NA
(32) Priority Date :NA
(33) Name of priority country :NA
(86) International Application No :NA
Filing Date :NA
(87) International Publication No : NA
(61) Patent of Addition to Application Number :NA
Filing Date :NA
(62) Divisional to Application Number :NA
Filing Date :NA

(71)**Name of Applicant :**
1)SWAPNANIL TALUKDAR
Address of Applicant :H. NO. 29, SBI COLONY, BISHNU RAVA PATH, DAKHINGAON, KAHILIPARA, GUWAHATI, ASSAM, PIN 781019 Assam
(72)**Name of Inventor :**
1)SWAPNANIL TALUKDAR

(57) Abstract :
This invention is a foot operated manual page turning machine. It comprises of a table(l) with a page control mechanism(2) on a head board(4) and foot control mechanism(3) on a foot board(7). The page control mechanism(2) comprises of side clamps(11), angle clamps(12), turn clamp(13) and an object area(6). Each of these clamps are controlled by their respective foot pedals on sliding channels on the foot board(7) that constitutes a foot control mechanism(3). To turn a page of a book kept in the object area(6), a side clamp(11) holds a page and the angle clamp(12) brings up a fold in which the turn clamp(13) inserts a turn rod(32) to turn the page. The invention is manual user controlled. It can work on pages irrespective of thicknesses, texture, quality or size. It finds its application at situations when a person is unable to use the fingers or hands to read a book.

No. of Pages : 20 No. of Claims : 10

(12) PATENT APPLICATION PUBLICATION
(19) INDIA
(22) Date of filing of Application :29/10/2013
(21) Application No.486/KOL/2013 A
(43) Publication Date : 19/12/2014

(54) Title of the invention : RADIATION RESPONSE PROTEINS AND RADIATION RESPONSE GENES

(51) International classification	:A61K 38/00
(31) Priority Document No	:NA
(32) Priority Date	:NA
(33) Name of priority country	:NA
(86) International Application No	:
Filing Date	:01/01/1900
(87) International Publication No	: NA
(61) Patent of Addition to Application Number	:NA
Filing Date	:NA
(62) Divisional to Application Number	:NA
Filing Date	:NA

(71)**Name of Applicant :**
1)Professor Rajeshwar Nath Sharan
Address of Applicant :Principal investigator (2, NEHU Campus, North-Eastern Hill University, Umshing, Shillong 793022, Meghalaya
2)Secretary, DAE
(72)**Name of Inventor :**
1)Professor Rajeshwar Nath Sharan
2)Ms. Saibadaiahun Nongrum
3)Dr. S. Thangminlal Vaiphei
4)Dr. Lakhan Kma
5)Dr. Ramesh Chandra Chaubey

(57) Abstract :The present invention relates to Radiation Response Proteins (RRPs) and Radiation Response Genes (RRGs). More particularly, the present invention relates to Radiation Response Gene(s) (RRG) and Radiation Response Protein(s) (RRP) in Human Peripheral Blood Lymphocyte (HPBL) and a method to perform molecular bio-dosimetry in human population either exposed to radiations and/or suspected to have been exposed to radiation. Present invention also relates to a kit comprising components to perform bio-dosimetry with identified RRPs and RRGs.

No. of Pages : 20 No. of Claims : 10

Publication After 18 Months:

The following Patent Applications have been published under Section 11A (3) of The Patents (Amendment) Act, 2005. Any Person may file representation by way of opposition to the Controller of Patents at the appropriate office against the grant of the patent in the prescribed manner under section 25(1) of the Patents (Amendment) Act, 2005 read with the rule 55 of The Patents (Amendment) Rules, 2006:

(12) PATENT APPLICATION PUBLICATION

(21) Application No.1451/DEL/2013 A

(19) INDIA

(22) Date of filing of Application :15/05/2013

(43) Publication Date : 19/12/2014

(54) Title of the invention : SCALENDER (SCALE & CALENDER)

(51) International classification	:D21G	(71)**Name of Applicant :**
(31) Priority Document No	:NA	**1)CHARU PRIYA**
(32) Priority Date	:NA	Address of Applicant :HS/150, SECTOR-A, SITAPUR
(33) Name of priority country	:NA	ROAD, YOJNA, JANAKIPURAM, LUCKNOW-226021, U.P.
(86) International Application No	:NA	Uttar Pradesh India
Filing Date	:NA	(72)**Name of Inventor :**
(87) International Publication No	: NA	**1)CHARU PRIYA**
(61) Patent of Addition to Application Number	:NA	
Filing Date	:NA	
(62) Divisional to Application Number	:NA	
Filing Date	:NA	

(57) Abstract :
The present invention relates to a kind of a device with has a flexible strip over it, which can be slided and adjusted. The main body of the ruler has inches and centimeters markings. The sliding strip has months and days calibrations printed on it. The relative movement of the sliding strip over the main body of the ruler corresponds to months calendar of an vear for which it is calibrated.

No. of Pages : 11 No. of Claims : 5

(12) PATENT APPLICATION PUBLICATION
(19) INDIA
(22) Date of filing of Application :15/05/2013
(21) Application No.1452/DEL/2013 A
(43) Publication Date : 19/12/2014

(54) Title of the invention : FOCUSED ION BEAM SYSTEMS AND METHODS OF OPERATION

(51) International classification	:H01J, C09B
(31) Priority Document No	:NA
(32) Priority Date	:NA
(33) Name of priority country	:NA
(86) International Application No	:NA
Filing Date	:NA
(87) International Publication No	: NA
(61) Patent of Addition to Application Number	:NA
Filing Date	:NA
(62) Divisional to Application Number	:NA
Filing Date	:NA

(71)**Name of Applicant :**
1)INDIAN INSTITUTE OF TECHNOLOGY KANPUR
Address of Applicant :Kanpur, Uttar Pradesh, 208016, INDIA.
Uttar Pradesh India
(72)**Name of Inventor :**
1)Sudeep BHATTACHARJEE
2)Jose Vettiyankal MATHEW

(57) Abstract :
A focused ion beam system is provided. The focused ion beam system includes a plasma generation chamber configured to contain a source gas that is radiated with microwaves to produce plasma. The plasma generation chamber includes a plasma confinement device configured to confine the plasma in radial and axial directions within the plasma generation chamber and to form a plasma meniscus at an extraction end of the plasma generation chamber. The focused ion beam system also includes a beam extraction chamber configured to extract a focused ion beam from the confined plasma and to focus the extracted focused ion beam on a workpiece.

No. of Pages : 24 No. of Claims : 10

(12) PATENT APPLICATION PUBLICATION
(19) INDIA
(22) Date of filing of Application :21/05/2013
(21) Application No.1508/DEL/2013 A
(43) Publication Date : 19/12/2014

(54) Title of the invention : METHOD AND SYSTEM FOR CONTROLLING MALWARE SPREADING ACROSS ELECTRONIC DEVICES

(51) International classification :C06F
(31) Priority Document No :NA
(32) Priority Date :NA
(33) Name of priority country :NA
(86) International Application No :NA
Filing Date :NA
(87) International Publication No : NA
(61) Patent of Addition to Application Number :NA
Filing Date :NA
(62) Divisional to Application Number :NA
Filing Date :NA

(71)**Name of Applicant :**
1)Samsung India Electronics Pvt Ltd.
Address of Applicant :Samsung India Electronics Pvt. Ltd. Logix Cyber Park Plot No C-28 & 29, Tower D Noida Sec - 62 Delhi India
(72)**Name of Inventor :**
1)Bivas Mitra

(57) Abstract :
The invention provides a method and system for controlling malware spreading across electronic devices over a communication network. The method includes replicating a running image of the electronic devices on virtual machines in the communication network, and clustering the virtual machines into cluster(s) based on one or more parameters associated with the electronic devices. The method further includes detecting a malware associated with the electronic device, identifying the cluster(s) vulnerable to the malware based on the one or more parameters associated with the electronic device, and notifying each virtual machine associated with the identified cluster about the malware.

No. of Pages : 47 No. of Claims : 38

(12) PATENT APPLICATION PUBLICATION
(19) INDIA
(22) Date of filing of Application :21/05/2013
(21) Application No.1509/DEL/2013 A
(43) Publication Date : 19/12/2014

(54) Title of the invention : HEAT RESISTANT POLYETHYLENE TEREPHTHALATE COMPOSITION AND MEHTOD OF PREPARATION THEREOF

(51) International classification	:B23B, B29C
(31) Priority Document No	:NA
(32) Priority Date	:NA
(33) Name of priority country	:NA
(86) International Application No	:NA
Filing Date	:NA
(87) International Publication No	: NA
(61) Patent of Addition to Application Number	:NA
Filing Date	:NA
(62) Divisional to Application Number	:NA
Filing Date	:NA

(71)**Name of Applicant :**
1)ESTER INDUSTRIES LIMITED
Address of Applicant :SOHAN NAGAR, CHARUBETTA, AT & POST: KHATIMA - 262308B, DISTRICT: UDHAMSINGHNAGAR, UTTARAKAHAND STATE, INDIA
(72)**Name of Inventor :**
1)KULKARNI SANJAY TAMMAJI
2)DILLYRAJ BALASUNDARAM
3)REDDY KANDULA M.S.
4)VYAS CHANDRAKANT OMKAR

(57) Abstract :
The present disclosure relates to a process for preparing polyester. The process for preparing the polyester essentially involves the preparation of the isosorbide oligomer and the isosorbide polymer from the isosorbide oligomer. The isosorbide oligomer or isosorbide polymer is then co- polymerized with the polyester. The copolymerization isosorbide oligomer or isosorbide polymer may be carried out at any stage of the preparation of the polyester. The polyester obtained in accordance with the process of the present disclosure can be used in packaging applications such as preparing packaging materials or containers. The material or container obtained from the polyester of the present disclosure is capable of withstanding a temperature of 60 to 90°C without undergoing any deformation and shrinkage. Further, the material or container obtained from the polyester of the present disclosure is transparent or has lower color b value.

No. of Pages : 30 No. of Claims : 17

(12) PATENT APPLICATION PUBLICATION
(19) INDIA
(22) Date of filing of Application :24/05/2013
(21) Application No.1563/DEL/2013 A
(43) Publication Date : 19/12/2014

(54) Title of the invention : SEMICONDUCTOR OXIDE NANOTUBES-FLYASH AND SEMICONDUCTOR OXIDE NANOTUBES-METAL OXIDE COMPOSITE PARTICLES, THEIR PROCESSING VIA ION-EXCHANGE MECHANISM, AND METHODS FOR THEIR RECYCLING IN THE DYE-REMOVAL APPLICATION THEREOF

(51) International classification	:B82Y, B01J
(31) Priority Document No	:NA
(32) Priority Date	:NA
(33) Name of priority country	:NA
(86) International Application No	:NA
Filing Date	:NA
(87) International Publication No	: NA
(61) Patent of Addition to Application Number	:NA
Filing Date	:NA
(62) Divisional to Application Number	:NA
Filing Date	:NA

(71)**Name of Applicant :**
1)COUNCIL OF SCIENTIFIC & INDUSTRIAL RESEARCH
Address of Applicant :ANUSANDHAN BHAWAN, RAFI MARG, NEW DELHI-110001, INDIA Delhi India
(72)**Name of Inventor :**
1)DR. SHUKLA SATYAJIT VISHNU
2)MR. PADINHATTATAYIL HAREESH
3)MRS. NARAYANI HARSHA
4)MR. JOSE MANU
5)MRS. KARUNAKARAN REMYA

(57) Abstract :
Semiconductor-Oxides Nanotubes-Based Composite Particles Useful for Dye-Removal and Process Thereof, has been described in this invention, which relates to an innovative method, involving an ion-exchange mechanism operating under the dark-condition in an aqueous solution, for the processing of innovative products consisting of the nanotubes of semiconductor-oxides deposited on (or anchored to or attached to) the surface of flyash particles and metal-oxide (magnetic and non-magnetic) nanoparticles. The resulting micro-nano and nano-nano integrated composite particles find potential application in the removal of an organic synthetic-dye from an aqueous solution and industry effluent via the surface-adsorption process, involving the ion-exchange and electrostatic-attraction mechanisms, operating in the dark-condition. The novel composite particles can be recycled for the next-cycle of dyeadsorption by decomposing the previously adsorbed-dye on their surfaces via an innovative approach involving the use of either noble-metal-deposited photocatalyst or a magnetically separable magnetic photocatalyst and an exposure to the ultraviolet (UV) or solar-radiation.

No. of Pages : 64 No. of Claims : 14

(12) PATENT APPLICATION PUBLICATION
(19) INDIA
(22) Date of filing of Application :15/05/2013
(21) Application No.1440/DEL/2013 A
(43) Publication Date : 19/12/2014

(54) Title of the invention : SPIRO-OXAZINES, INDOLINONES AND PREPARATION THEREOF

(51) International classification :C07D
(31) Priority Document No :NA
(32) Priority Date :NA
(33) Name of priority country :NA
(86) International Application No :NA
Filing Date :NA
(87) International Publication No : NA
(61) Patent of Addition to Application Number :NA
Filing Date :NA
(62) Divisional to Application Number :NA
Filing Date :NA

(71)**Name of Applicant :**
1)COUNCIL OF SCIENTIFIC & INDUSTRIAL RESEARCH
Address of Applicant :ANUSANDHAN BHAWAN, RAFI MARG, NEW DELHI-110001, INDIA
(72)**Name of Inventor :**
1)AKKATTU THANKAPPAN BIJU
2)ANUP BHUNIA
3)TONY ROY

(57) Abstract :
The present invention relates to novel spiro-oxazine analogues of Formula-I and Indolinone compounds of Formula-II or positional isomers, or stereoisomers, or derivatives, or pharmaceutically acceptable salt thereof. Further the invention provides transition- metal free multicomponent reaction (MCR) process for the preparation of said compounds of Formula-I and II using aryne precursor, N-substituted isatin and N-heteroaromatic compound as the nucleophile,under mild condition leading to formation of desired complex of spiro-oxazine analogues (I) and indolinone analogues (II) in high yield and selectivity.

No. of Pages : 41 No. of Claims : 10

(12) PATENT APPLICATION PUBLICATION
(19) INDIA
(22) Date of filing of Application :23/05/2013
(21) Application No.1547/DEL/2013 A
(43) Publication Date : 19/12/2014

(54) Title of the invention : A WHEELED WALKER WITH BRAKING SYSTEM

(51) International classification :A61H
(31) Priority Document No :NA
(32) Priority Date :NA
(33) Name of priority country :NA
(86) International Application No :NA
Filing Date :NA
(87) International Publication No : NA
(61) Patent of Addition to Application Number :NA
Filing Date :NA
(62) Divisional to Application Number :NA
Filing Date :NA

(71)**Name of Applicant :**
1)INDIAN INSTITUTE OF TECHNOLOGY DELHI
Address of Applicant :HAUZ KHAS, NEW DELHI 110016 Delhi India
(72)**Name of Inventor :**
1)SIDDH NATH SINGH
2)AJAY KUMAR BEHERA
3)JITURANJAN NAYAK

(57) Abstract :
The present invention relates to a walking device or walker comprising plurality of wheeled legs (64) and braking system (63). The braking system (63) is mounted on legs and comprises braking means to apply brake on the ground surface. The wheeled legs (64) are connected by means of hinges (10) and hinge leaves (1 1) which provide flexibility in step by step walking as well as foldability of the walker. The braking means are controlled with the help of lever-switch control device (65) which is mounted in handle bar (66) of the walker. The walker can be moved by compressing suitable lever provided on the handle rest bar (66) of the walker and by releasing the lever the walker comes to stationary position.

No. of Pages : 39 No. of Claims : 26

(12) PATENT APPLICATION PUBLICATION
(19) INDIA
(22) Date of filing of Application :23/05/2013
(21) Application No.1548/DEL/2013 A
(43) Publication Date : 19/12/2014

(54) Title of the invention : TOOL CHANGING MECHANISM FOR MACHINE TOOL

(51) International classification :A61H
(31) Priority Document No :NA
(32) Priority Date :NA
(33) Name of priority country :NA
(86) International Application No :NA
Filing Date :NA
(87) International Publication No : NA
(61) Patent of Addition to Application Number :NA
Filing Date :NA
(62) Divisional to Application Number :NA
Filing Date :NA

(71)**Name of Applicant :**
1)KUGI TECH CORP.
Address of Applicant :NO. 15, LONGSHAN 2ND ST., DAYA DIST., TAICHUNG CITY 42863, TAIWAN (R.O.C) Taiwan
(72)**Name of Inventor :**
1)LIU, CHE-SEN

(57) Abstract :
A machine tool includes a receptacle extended from a stand, a working spindle rotatably attached to the receptacle and having a chuck device for grasping and releasing a tool member from the working spindle, a follower slidably attached onto the working spindle for actuating the chuck device to selectively grasp or release the tool member, a lever arm having one end pivotally attached to the receptacle with an axle, an actuator attached to the lever arm for actuating the follower to operate the chuck device to grasp and to release the tool member, and a driving device includes a piston for moving the lever arm and the actuator to actuate and move the chuck device to release the tool member.

No. of Pages : 30 No. of Claims : 7

(12) PATENT APPLICATION PUBLICATION
(19) INDIA
(22) Date of filing of Application :28/05/2013
(21) Application No.1605/DEL/2013 A
(43) Publication Date : 19/12/2014

(54) Title of the invention : HYDRAULIC PELTON TURBINE

(51) International classification :F03B
(31) Priority Document No :NA
(32) Priority Date :NA
(33) Name of priority country :NA
(86) International Application No :NA
Filing Date :NA
(87) International Publication No : NA
(61) Patent of Addition to Application Number :NA
Filing Date :NA
(62) Divisional to Application Number :NA
Filing Date :NA

(71)**Name of Applicant :**
1)ALSTOM RENEWABLE TECHNOLOGIES
Address of Applicant :3 AVENUE ANDRE MALRAUX, F-92300 LEVALLOIS PERRET, FRANCE
(72)**Name of Inventor :**
1)BHARGAV PATEL
2)YOANN BOMCHIL
3)NICOLAS BALCET

(57) Abstract :
This hydraulic Pelton turbine, comprises a runner, that rotates around a main axis, and includes runner buckets, evenly spaced around a central axis and at least one injector (2), that creates a water jet (24) through an orifice (OI), along an injection axis (X20) said. water jet striking one of the runner buckets. The turbine is also equipped with air injection means (206), located in the mouthpiece (20) of the water injector (2) and generating an air jet jacket (26) around the water jet.

No. of Pages : 12 No. of Claims : 8

(12) PATENT APPLICATION PUBLICATION
(19) INDIA
(22) Date of filing of Application :15/05/2013
(21) Application No.1444/DEL/2013 A
(43) Publication Date : 19/12/2014

(54) Title of the invention : AN EFFICIENT MICROWAVE IMAGING TECHNIQUE FOR BIOMIEDICAL APPLICATION

(51) International classification :H05B
(31) Priority Document No :NA
(32) Priority Date :NA
(33) Name of priority country :NA
(86) International Application No :NA
Filing Date :NA
(87) International Publication No : NA
(61) Patent of Addition to Application Number :NA
Filing Date :NA
(62) Divisional to Application Number :NA
Filing Date :NA

(71)**Name of Applicant :**
1)AMITY UNIVERSITY
Address of Applicant :AMITY UNIVERSITY CAMPUS, SECTOR-125, NOIDA-201303, Uttar Pradesh India
(72)**Name of Inventor :**
1)DR. MALAY RANJAN TRIPATHY

(57) Abstract :
The present invention relates to an improved walking aid system with a comfortable seating arrangement attached with a sensor and GPS navigation system, mainly for the disabled and elderly people. This pressure sensor on the handle of the supporting system automatically directs the available light weight, polymer composite seat to get placed in an appropriate position for providing a seating arrangement for the disabled person. This advanced walking support system is also configured with a GPS navigation system that helps to find out the location of the disabled person. The present walking support system is user friendly, automatic and economical.

No. of Pages : 21 No. of Claims : 5

(12) PATENT APPLICATION PUBLICATION
(19) INDIA
(22) Date of filing of Application :23/05/2013
(21) Application No.1551/DEL/2013 A
(43) Publication Date : 19/12/2014

(54) Title of the invention : TWO-FLUID ATOMIZER

(51) International classification :B05B
(31) Priority Document No :NA
(32) Priority Date :NA
(33) Name of priority country :NA
(86) International Application No :NA
Filing Date :NA
(87) International Publication No : NA
(61) Patent of Addition to Application Number :NA
Filing Date :NA
(62) Divisional to Application Number :NA
Filing Date :NA

(71)**Name of Applicant :**
1)INDIAN INSTITUTE OF TECHNOLOGY KANPUR
Address of Applicant :DEAN. RESEARCH & DEVELOPMENT. 255. FACULTY BUILDING INDIAN INSTITUTE OF TECHNOLOGY KANPUR, KANPUR-208016 UTTAR PRADESH,INDIA
(72)**Name of Inventor :**
1)MISHRA, DEBI PRASAD
2)PADWAL, MANISHA BALWANTRAO

(57) Abstract :
A two-fluid atomizer (200) for atomization of a fluid is disclosed. The two-fluid atomizer (200) comprises an inner tube (1 02) to provide a passage to the fluid to be atomized. The two-fluid atomizer (200) further comprises a nozzle head (106) coupled to a lower end of the inner tube (102). The nozzle head (106) includes plurality of aerator holes (1 10) proximate to a discharge orifice (1 12). The plurality of aerator holes (1 10) allows an atomizing gas to enter a mixing chamber (108). Further, an outer tube (104) surrounding the inner tube (102) to form a plenum for the atomizing gas. Further, the two-fluid atomizer (200) comprises a nozzle cap (1 14) coupled to a bottom end of the outer tube (1 04) and the nozzle head (106) to direct the atomizing gas to the mixing chamber (108) through the e plurality of aerator holes (1 10) for atomization of the fluid.

No. of Pages : 18 No. of Claims : 8

(12) PATENT APPLICATION PUBLICATION
(19) INDIA
(22) Date of filing of Application :28/05/2013
(21) Application No.1608/DEL/2013 A
(43) Publication Date : 19/12/2014

(54) Title of the invention : REQUIRED FUEL ANNOUNCEMENT SYSTEM

(51) International classification	:B60K, F02B
(31) Priority Document No	:NA
(32) Priority Date	:NA
(33) Name of priority country	:NA
(86) International Application No	:NA
Filing Date	:NA
(87) International Publication No	: NA
(61) Patent of Addition to Application Number	:NA
Filing Date	:NA
(62) Divisional to Application Number	:NA
Filing Date	:NA

(71)**Name of Applicant :**
1)LALIT KAUSHIK
Address of Applicant :C/6, RATTAN PARK, NANGLOI, DELHI-110041. Delhi India
(72)**Name of Inventor :**
1)LALIT KAUSHIK

(57) Abstract :
Today, there are multi fuel vehicles available in the Indian market. Different fuel based engines are developed and successfully works but mostly different fuel based engines are fitted in the same types of the car models. So that way reason it is very difficult to the fuel refilling agent to accurately analysis the vehicle type and fill up fuel type which is exactly match with engine. According to serve report at least 150,000 drivers put the wrong fuel in their car every year. Thats one every three-and-a-half minutes. It could be a result of being new to the vehicle or simply being distracted while filling up. Misfiling seems to be associated particularly with the growth in diesel car sales. Modern diesels are so quiet its easy to forget youre driving one, particularly if its a second family car or hire car. With the help of this first time innovative refilling fuel introducing system. Vehicle automatically introduces to refilling agent which type of the fuel is to be refill in the vehicle. Vehicle is introduces fuel types to refilling agent in the audio and visible both the way. This device start working automatically when the outerfuel tank cap of the vehicle is to be open .We easily uses of this technology in all the different fuel based vehicles.

No. of Pages : 19 No. of Claims : 7

(12) PATENT APPLICATION PUBLICATION
(19) INDIA
(22) Date of filing of Application :29/05/2013
(21) Application No.1609/DEL/2013 A
(43) Publication Date : 19/12/2014

(54) Title of the invention : ACCESSING ELECTRONIC DEVICE USING TOUCH

(51) International classification :G06F
(31) Priority Document No :NA
(32) Priority Date :NA
(33) Name of priority country :NA
(86) International Application No :NA
Filing Date :NA
(87) International Publication No : NA
(61) Patent of Addition to Application Number :NA
Filing Date :NA
(62) Divisional to Application Number :NA
Filing Date :NA

(71)**Name of Applicant :**
1)Samsung India Electronics Pvt Ltd.
Address of Applicant :Samsung India Electronics Pvt. Ltd. Logix Cyber Park Plot No C-28 & 29, Tower D Noida Sec - 62 Delhi India
(72)**Name of Inventor :**
1)Pulkit Agrawal
2)Tarun Sharma
3)Lovlesh Malik

(57) Abstract :
The invention provides a method and system for providing access to an electronic device using a dynamic sequence of tapping. The method includes allocating a character to each finger based on a chronological order of contact over a touch surface of the electronic device. Further, the method includes receiving an input sequence of the characters based on a tapping sequence of one or more fingers on the electronic device and matching the input sequence with a predefined sequence. Furthermore, the method includes providing access to the electronic device if the input sequence matches with the predefined sequence

No. of Pages : 53 No. of Claims : 33

(12) PATENT APPLICATION PUBLICATION
(19) INDIA
(22) Date of filing of Application :15/05/2013
(21) Application No.1449/DEL/2013 A
(43) Publication Date : 19/12/2014

(54) Title of the invention : HEMOGLOBIN RECEPTOR AS NOVEL VACCINE FOR LEISHMANIASIS

(51) International classification :A61K
(31) Priority Document No :NA
(32) Priority Date :NA
(33) Name of priority country :NA
(86) International Application No :NA
Filing Date :NA
(87) International Publication No : NA
(61) Patent of Addition to Application Number :NA
Filing Date :NA
(62) Divisional to Application Number :NA
Filing Date :NA

(71)**Name of Applicant :**
1)NATIONAL INSTITUTE OF IMMUNOLOGY
Address of Applicant :ARUNA ASAF ALI MARG, NEW DELHI-110067, INDIA Delhi India
(72)**Name of Inventor :**
1)AMITABHA MUKHOPADHYAY
2)SYAMAL ROY
3)DEEPIKA GUPTA
4)RAJAN GUHA
5)RUCHIR RASTOGI

(57) Abstract :
The present invention in general relates Hemoglobin receptor or its part as a novel vaccine candidate against Leishmaniasis. Specifically, the present invention envisages HbR DNA for eliciting immune response in a mammal against Leishmaniasis. Additional aspect of the present invention is related to a vaccine composition for inducing immune response against Leishmaniasis in mammals. In a preferred aspect, the present invention relates to use of HbR-polypeptide as marker for diagnosis of Leishmania in kala-azar patients.

No. of Pages : 30 No. of Claims : 12

(12) PATENT APPLICATION PUBLICATION
(19) INDIA
(22) Date of filing of Application :15/05/2013
(21) Application No.1450/DEL/2013 A
(43) Publication Date : 19/12/2014

(54) Title of the invention : A TAXI POSITIONING SYSTEM

(51) International classification :G08G
(31) Priority Document No :NA
(32) Priority Date :NA
(33) Name of priority country :NA
(86) International Application No :NA
Filing Date :NA
(87) International Publication No : NA
(61) Patent of Addition to Application Number :NA
Filing Date :NA
(62) Divisional to Application Number :NA
Filing Date :NA

(71)**Name of Applicant :**
1)CABOOM TECHNOLOGIES
Address of Applicant :B-52 CITY APARTMENTS, VASUNDHARA ENCLAVE, DELHI-110096, Delhi India
(72)**Name of Inventor :**
1)ANKUSH PANDEY
2)SUJAY ARORA
3)EKANSH KAUSHIK

(57) Abstract :
This invention relates to a taxi positioning system for optimization of taxi positioning comprising a central processing unit (CPU) in communication with a plurality of systems containing required data for updating taxi driver with various information for optimization of taxi positioning, wherein the CPU is adapted to process the data for predicting the optimal positioning of the taxi.

No. of Pages : 17 No. of Claims : 10

(12) PATENT APPLICATION PUBLICATION
(19) INDIA
(22) Date of filing of Application :29/05/2013
(21) Application No.1612/DEL/2013 A
(43) Publication Date : 19/12/2014

(54) Title of the invention : HIGH STARTING TORQUE INDUCTION MOTOR

(51) International classification :H02K
(31) Priority Document No :NA
(32) Priority Date :NA
(33) Name of priority country :NA
(86) International Application No :NA
Filing Date :NA
(87) International Publication No : NA
(61) Patent of Addition to Application Number :NA
Filing Date :NA
(62) Divisional to Application Number :NA
Filing Date :NA

(71)**Name of Applicant :**
1)VERMA, MANISH KUMAR
Address of Applicant :566/184, JAIPRAKASH NAGAR, ALAMBAGH, LUCKNOW, UP-226005 Uttar Pradesh India
2)SENGUPTA, MANAB KUMAR
(72)**Name of Inventor :**
1)VERMA, MANISH KUMAR
2)SENGUPTA MANAB KUMAR

(57) Abstract :
An induction motor (1 000) is provided. The induction motor (1 000) comprises a stator (200) and a rotor (300) disposed within the stator (200). The rotor (300) includes a pair of end rings (400% 400b) and at least two rotor bars (500). The pair of end rings (400% 400b) is axially disposed in spaced-apart manner and side by side of an laminated core (3 10) on a central shaft (320). Further, at least two rotor bars (500) extends axially between the two end rings (400% 400b) in spaced-apart manner around the central shaft (320). The rotor bars (500) include a longitudinal member (600) and at least one Frequency Dependent Resistance (FDR) member (700) configured to the longitudinal member (600) in each rotor bar.

No. of Pages : 18 No. of Claims : 12

(12) PATENT APPLICATION PUBLICATION
(19) INDIA
(22) Date of filing of Application :29/05/2013
(21) Application No.1613/DEL/2013 A
(43) Publication Date : 19/12/2014

(54) Title of the invention : DETECTION OF AN UNKNOWN HOST DEVICE IN A COMMUNICATION NETWORK

(51) International classification	:H04L, G06F
(31) Priority Document No	:NA
(32) Priority Date	:NA
(33) Name of priority country	:NA
(86) International Application No	:NA
Filing Date	:NA
(87) International Publication No	: NA
(61) Patent of Addition to Application Number	:NA
Filing Date	:NA
(62) Divisional to Application Number	:NA
Filing Date	:NA

(71)**Name of Applicant :**
1)ALCATEL LUCENT
Address of Applicant :3, AVENUE OCTAVE GREARD 75007 PARIS, FRANCE
(72)**Name of Inventor :**
1)KUMAR, SANDEEP
2)BHATIA, JAGJEET

(57) Abstract :
Methods and systems for detecting an unknown host device in a communication network are described. In one implementation, a network switch (108) comprises a processor (112) and a receiving module (122) coupled to the processor (112). The receiving module (122) receives a packet from a host device (106) and identifies at least one network parameter and a host IP address based on the packet. The network switch (108) further comprises a lookup module (124) to determine presence of the at least one network parameter in a layer 2 table (130) and the host IP address in a layer 3 table (132). Further, the lookup module (124) detects the host device (106) as an unknown host device based on determining absence of at least one of the host IP address in the layer 3 table (132) and the at least one network parameter in the layer 2 table (130).

No. of Pages : 22 No. of Claims : 11

(12) PATENT APPLICATION PUBLICATION
(19) INDIA
(22) Date of filing of Application :29/05/2013
(21) Application No.1614/DEL/2013 A
(43) Publication Date : 19/12/2014

(54) Title of the invention : PROVIDING INFORMATION ABOUT INTERNET PROTOCOL TELEVISION STREAMS

(51) International classification :H04N
(31) Priority Document No :NA
(32) Priority Date :NA
(33) Name of priority country :NA
(86) International Application No :NA
Filing Date :NA
(87) International Publication No : NA
(61) Patent of Addition to Application Number :NA
Filing Date :NA
(62) Divisional to Application Number :NA
Filing Date :NA

(71)**Name of Applicant :**
1)ALCATEL LUCENT
Address of Applicant :3, AVENUE OCTAVE GREARD 75007 PARIS, FRANCE
(72)**Name of Inventor :**
1)VENU, GUNASEKAR
2)RAJAPANDIYAN, KARTHICK
3)KANNAN, SRI, VIDYA

(57) Abstract :
Systems and methods for providing information about IPTV streams are described herein. In one implementation, a content viewing device (102) for providing information about Internet Protocol Television (IPTV) streams comprises a processor (IOS), and a content splitter module (116) coupled to the processor (l08), The content splitter module (116) receives an IPTV stream as a composite content from a service provider of IPTV services and splits the composite content into primary content and background content. The content viewing device (102) further comprises a background content display (BGCD) module (118), coupled to the processor (108). to determine whether a user input to provide the background content of the primary content has been received. The BGCD module (118) thereafter provides the background content to the user on determining the receipt of the user input

No. of Pages : 18 No. of Claims : 12

(12) PATENT APPLICATION PUBLICATION
(19) INDIA
(22) Date of filing of Application :16/05/2013
(21) Application No.1462/DEL/2013 A
(43) Publication Date : 19/12/2014

(54) Title of the invention : UNIVERSAL FEMORAL TRIAL WITH PS BOX SYSTEM

(51) International classification :A61B
(31) Priority Document No :NA
(32) Priority Date :NA
(33) Name of priority country :NA
(86) International Application No :NA
Filing Date :NA
(87) International Publication No : NA
(61) Patent of Addition to Application Number :NA
Filing Date :NA
(62) Divisional to Application Number :NA
Filing Date :NA

(71)**Name of Applicant :**
1)STRYKER GLOBAL TECHNOLOGY CENTER
Address of Applicant :VATIKA BUSINESS PARK, 10TH FLOOR, BLOCK-2, SECTOR-49, SOHNA ROAD, GURGAON-122 001, HARYANA, INDIA
(72)**Name of Inventor :**
1)SHARMA, DINESH
2)REHAN, MD.

(57) Abstract :
The present invention relates to universal femoral trial with PS box system for preparing the femoral bone to receive a PS implant and perform trialing of the implant. More specifically, the present invention outlines a system that acts as a PS box cutting guide and as a universal femoral trial for both left and right knee used during Total Knee Arthroplasty. The universal femoral trial with PS box is effective in reducing the number of surgical steps, reducing surgery time and providing a more efficient surgical technique. The device comprises of a universal femoral trial body, a central flipper, locking pin and PS box jig.

No. of Pages : 40 No. of Claims : 17

(12) PATENT APPLICATION PUBLICATION
(19) INDIA
(22) Date of filing of Application :21/05/2013
(21) Application No.1517/DEL/2013 A
(43) Publication Date : 19/12/2014

(54) Title of the invention : IN-VITRO METHOD FOR PRODUCING VIRUS FREE GARLIC

(51) International classification :C12N
(31) Priority Document No :NA
(32) Priority Date :NA
(33) Name of priority country :NA
(86) International Application No :NA
Filing Date :NA
(87) International Publication No : NA
(61) Patent of Addition to Application Number :NA
Filing Date :NA
(62) Divisional to Application Number :NA
Filing Date :NA

(71)**Name of Applicant :**
1)DEVLEELA BIOTECHS
Address of Applicant :ANAND VIAHR, VIP ROAD, RAIPUR, CHHATTISGARH - 492001 Chattisgarh India
2)INDIAN AGRICULTURAL RESEARCH INSTITUTE
(72)**Name of Inventor :**
1)DR. SAHU, MALTI

(57) Abstract :
Disclosed herein a method for producing virus fiee Garlic comprising thermotherapy, chemotherapy and meristem culture followed by tissue culture, in a way to produce bulb of the Garlic is free from the viruses are like OYDV, GCLV, Potyvirus and group of Allexiviruses. In addition the present invention discloses a method for detecting viruses through a selective detection technique employing RT- PCR and ELISA based techniques.

No. of Pages : 15 No. of Claims : 17

(12) PATENT APPLICATION PUBLICATION
(19) INDIA
(22) Date of filing of Application :24/05/2013
(21) Application No.1570/DEL/2013 A
(43) Publication Date : 19/12/2014

(54) Title of the invention : AN ANALOG CONTROLLER FOR CONTROLLED FREQUENCY OPERATION IN TWO WINDING SINGLE PHASE SELF EXCITED INDUCTION GENERATOR BASED POWER GENERATION SYSTEMS FOR MICRO HYDEL APPLICATIONS

(51) International classification :H02P
(31) Priority Document No :NA
(32) Priority Date :NA
(33) Name of priority country :NA
(86) International Application No :NA
Filing Date :NA
(87) International Publication No : NA
(61) Patent of Addition to Application Number :NA
Filing Date :NA
(62) Divisional to Application Number :NA
Filing Date :NA

(71)**Name of Applicant :**
1)INDIAN INSTITUTE OF TECHNOLOGY DELHI
Address of Applicant :HAUZ KHAS, NEW DELHI - 110016, INDIA Delhi India
(72)**Name of Inventor :**
1)SINGH, BHIM
2)MURTHY, S.S.
3)KALLA, UJJWAL, KUMAR

(57) Abstract :
The present invention relates to an analog controller for output frequency control integrated with a stand alone generator using specially wound single phase two winding self excited induction generator (SEIG) for micro hydel applications wherein the invention also relates to a generator comprising the analog controller and a system to achieve constant frequency in such a generator.

No. of Pages : 28 No. of Claims : 20

(12) PATENT APPLICATION PUBLICATION
(19) INDIA
(22) Date of filing of Application :24/05/2013
(21) Application No.1571/DEL/2013 A
(43) Publication Date : 19/12/2014

(54) Title of the invention : A METHOD OF PREPARATION OF SUPPORTED PLATINUM NANO PARTICLE CATALYST IN TUBULAR FLOW REACTOR VIA POLYOL PROCESS

(51) International classification :B01J
(31) Priority Document No :NA
(32) Priority Date :NA
(33) Name of priority country :NA
(86) International Application No :NA
Filing Date :NA
(87) International Publication No : NA
(61) Patent of Addition to Application Number :NA
Filing Date :NA
(62) Divisional to Application Number :NA
Filing Date :NA

(71)**Name of Applicant :**
1)INTERNATIONAL ADVANCED RESEARCH CENTRE FOR POWDER METALLURGY AND NEW MATERIALS (ARCI)
Address of Applicant :PLOT NO 102, INSTITUTIONAL AREA, SECTOR 44, GURGAON-122003 HARYANA INDIA
(72)**Name of Inventor :**
1)KAVERIPATNAM SAMBAN DHATHATHREYAN
2)NATARAJAN RAJALAKSHMI
3)KAYARKATTE NARAYAN MANOJ KRISHNA

(57) Abstract :
The present invention relates to a synthesis of supported platinum nano particle catalyst using a tubular flow reactor via polyol process. The step comprising preparation of a reaction mixture having platinum metal precursor, a nano catalyst support like carbon black forming colloid with a poly alcohol solvent like ethylene glocol and feeding continuously from the reactant reservoir (6) into to the tubular flow reactor (8) by means of a peristaltic pump (7). Said tubular flow reactor is heated by means of direct resistive heating using a DC current source (15) and maintained at optimum reaction temperature of at around 135 °C to 160 °C by ensuring that the temperature raise in the reaction mixture is uniform with increase of 1.5 °C per cm and finally transferring into catalyst reservoir (14) and followed by centrifugation with repeated washing to remove any organic impurities and subsequent drying at 80 °C in oven overnight.

No. of Pages : 21 No. of Claims : 13

(12) PATENT APPLICATION PUBLICATION
(19) INDIA
(22) Date of filing of Application :30/05/2013
(21) Application No.1628/DEL/2013 A
(43) Publication Date : 19/12/2014

(54) Title of the invention : A METHOD FOR PREPARATION OF NANO -SIZED ZEOLITE PARTICLES.

(51) International classification :B01J
(31) Priority Document No :NA
(32) Priority Date :NA
(33) Name of priority country :NA
(86) International Application No :NA
Filing Date :NA
(87) International Publication No : NA
(61) Patent of Addition to Application Number :NA
Filing Date :NA
(62) Divisional to Application Number :NA
Filing Date :NA

(71)**Name of Applicant :**
1)AMITY UNIVERSITY
Address of Applicant :AMITY UNIVERSITY CAMPUS, SECTOR-125, NOIDA-201303, Uttar Pradesh India
(72)**Name of Inventor :**
1)SANGEETA TIWARI
2)RASHMI RANI PANDHY

(57) Abstract :
The present invention provides a rapid, cheap, single and efficient protocol for isolation of DNA from bacterial, fungal, plant, animal culture and tissue. The method does not involve lysozyme and proteinase K for isolation which are very costly for lysis. The method involve the simple application of mechanical disruption of tissue by grinding the tissue in liquid nitrogen with mortar and pestle to lyse the sample followed by simple isolation methods using various buffers.

No. of Pages : 12 No. of Claims : 3

(12) PATENT APPLICATION PUBLICATION
(19) INDIA
(22) Date of filing of Application :27/05/2013
(21) Application No.1589/DEL/2013 A
(43) Publication Date : 19/12/2014

(54) Title of the invention : BIG DATA ANALYSIS IN THE CLOUD

(51) International classification :G06F
(31) Priority Document No :NA
(32) Priority Date :NA
(33) Name of priority country :NA
(86) International Application No :NA
Filing Date :NA
(87) International Publication No : NA
(61) Patent of Addition to Application Number :NA
Filing Date :NA
(62) Divisional to Application Number :NA
Filing Date :NA

(71)**Name of Applicant :**
1)UNISYS CORPORATION
Address of Applicant :C/O PATENT & TECHNOLOGY LAW GROUP MS/2NW, 801 LAKEVIEW DRIVE, SUITE 100, BLUE BELL, PA 19422 USA U.S.A.
(72)**Name of Inventor :**
1)MILIND HALAGERI

(57) Abstract :
Systems and methods are disclosed herein to a cloud system comprising: a data classification module: at least one master node configured to divide up a classification query into a plurality of sub-problems based on input data, distribute the plurality of sub-problems, receive processed data from the plurality of data nodes, and to combine the received processed data into an answer to the query that determines a class; and at least one worker node configured to process the received sub-problem based on an activation function of the first worker node, and output an output based on the received sub-problem and the activation function.

No. of Pages : 29 No. of Claims : 23

(12) PATENT APPLICATION PUBLICATION
(19) INDIA
(22) Date of filing of Application :19/07/2013
(21) Application No.6453/DELNP/2013 A
(43) Publication Date : 19/12/2014

(54) Title of the invention : EQUIPMENT AND METHOD FOR COLD ROLLING A METAL STRIP

(51) International classification :B21B13/14,B21B29/00,B21B37/16
(31) Priority Document No :11290072.5
(32) Priority Date :02/02/2011
(33) Name of priority country :EPO
(86) International Application No :PCT/EP2011/054058
Filing Date :17/03/2011
(87) International Publication No :WO 2012/103961
(61) Patent of Addition to Application Number :NA
Filing Date :NA
(62) Divisional to Application Number :NA
Filing Date :NA

(71)**Name of Applicant :**
1)SIEMENS VAI METALS TECHNOLOGIES SAS
Address of Applicant :51 rue Sibert F 42403 Saint Chamond France
(72)**Name of Inventor :**
1)ROSSIGNEUX Bernard
2)CHARRE Francis
3)GUILLOT Yves
4)PERRET Jean
5)CRONIER Vincent

(57) Abstract :
The invention relates to a rolling mill and to a cold-rolling j method, wherein said rolling mill includes: an upper assembly of n rolls located in a recess of said rolling mill, above a plane (P) through which a strip (9) to be rolled moves, and a lower assembly of n rolls, located in another recess of said rolling mill opposite the upper assembly and below the plane (P) through which the strip (9) moves, wherein said upper and lower assemblies are intended to cooperate with each other so as to apply a rolling force to said strip (9); each of the assemblies including a working roll (1) contacting the strip (9) to be rolled and being supported by supporting rolls (2), which are in turn supported by bearing rolls (3) which are in turn supported by rows of bearing rollers (4); each row of bearing rollers (4) including a plurality of bearing rollers (4) mounted on a single roller-supporting axle (41) ; and at least one row of bearing rollers (4) of the upper assembly being actuated by a plurality of bearing-roller actuators (42) in a direction substantially perpendicular to the plane (P) through which the strip (9) moves; wherein: each bearingroller actuator (42) is capable of applying a local force, along said direction substantially perpendicular to the plane of movement of the strip, directly onto the roller-supporting axle (41) of said row of rollers; in that the number of bearing-roller actuators (42) capable of applying said local force to the supporting axle of a given row of bearing rollers is at least equal to the number of bearing rollers (4) of said row; and wherein it includes a control device (8) capable of controlling each of said actuators (42) such that the sum of the local forces applied by each of the actuators of the rolling mill is substantially equal to said rolling force.

No. of Pages : 37 No. of Claims : 17

(12) PATENT APPLICATION PUBLICATION
(19) INDIA
(22) Date of filing of Application :19/07/2013
(21) Application No.6454/DELNP/2013 A
(43) Publication Date : 19/12/2014

(54) Title of the invention : POLYCRYSTALLINE COMPACTS HAVING DIFFERING REGIONS THEREIN CUTTING ELEMENTS AND EARTH BORING TOOLS INCLUDING SUCH COMPACTS AND METHODS OF FORMING SUCH COMPACTS

(51) International classification	:E21B10/567,E21B10/54,B22F7/06
(31) Priority Document No	:13/010620
(32) Priority Date	:20/01/2011
(33) Name of priority country	:U.S.A.
(86) International Application No	:PCT/US2012/020182
Filing Date	:04/01/2012
(87) International Publication No	:WO 2012/099716
(61) Patent of Addition to Application Number	:NA
Filing Date	:NA
(62) Divisional to Application Number	:NA
Filing Date	:NA

(71)**Name of Applicant :**
1)BAKER HUGHES INCORPORATED
Address of Applicant :P.o. Box 4740 Houston TX 77210 4740 U.S.A.
(72)**Name of Inventor :**
1)SCOTT Danny E.
2)DIGIOVANNI Anthony A.

(57) Abstract :
Polycrystalline compacts include a hard polycrystalline material comprising first and second regions. The first region comprises a first plurality of grains of hard material having a first average grain size and a second plurality of grains of hard material having a second average grain size smaller than the first average grain size. The first region comprises catalyst material disposed in interstitial spaces between inter bonded grains of hard material. Such interstitial spaces between grains of the hard material in the second region are at least substantially free of catalyst material. In some embodiments the first region comprises a plurality of nanograins of the hard material. Cutting elements and earth boring tools include such polycrystalline compacts. Methods of forming such polycrystalline compacts include removing catalyst material from interstitial spaces within a second region of a polycrystalline compact without entirely removing catalyst material from interstitial spaces within a first region of the compact.

No. of Pages : 49 No. of Claims : 18

(12) PATENT APPLICATION PUBLICATION
(19) INDIA
(22) Date of filing of Application :27/05/2013
(21) Application No.1590/DEL/2013 A
(43) Publication Date : 19/12/2014

(54) Title of the invention : BIG DATA ANALYSIS IN THE CLOUD

(51) International classification :G06F
(31) Priority Document No :NA
(32) Priority Date :NA
(33) Name of priority country :NA
(86) International Application No :NA
Filing Date :NA
(87) International Publication No : NA
(61) Patent of Addition to Application Number :NA
Filing Date :NA
(62) Divisional to Application Number :NA
Filing Date :NA

(71)**Name of Applicant :**
1)UNISYS CORPORATION
Address of Applicant :C/O PATENT & TECHNOLOGY LAW GROUP MS/2NW, 801 LAKEVIEW DRIVE, SUITE 100, BLUE BELL, PA 19422, UNITED STATES OF AMERICA
(72)**Name of Inventor :**
1)MILIND HALAGERI

(57) Abstract :
Systems and methods are disclosed herein to a cloud system comprising: a data classification module: at least one master node configured to divide up a classification query into a plurality of sub-problems based on input data, distribute the plurality of sub-problems, receive processed data from the plurality of data nodes, and to combine the received processed data into an answer to the query that determines a class; and at least one worker node configured to process the received sub-problem based on an activation function of the first worker node, and output an output based on the received sub-problem and the activation function.

No. of Pages : 28 No. of Claims : 19

(12) PATENT APPLICATION PUBLICATION
(19) INDIA
(22) Date of filing of Application :27/05/2013
(21) Application No.1591/DEL/2013 A
(43) Publication Date : 19/12/2014

(54) Title of the invention : SYSTEM STATE MESSAGE IN SOFTWARE DEFINED NETWORKING

(51) International classification :H04L
(31) Priority Document No :NA
(32) Priority Date :NA
(33) Name of priority country :NA
(86) International Application No :NA
Filing Date :NA
(87) International Publication No : NA
(61) Patent of Addition to Application Number :NA
Filing Date :NA
(62) Divisional to Application Number :NA
Filing Date :NA

(71)**Name of Applicant :**
1)HEWLETT-PACKARD DEVELOPMENT COMPANY, L.P.
Address of Applicant :11445 COMPAQ CENTER DRIVE WEST, HOUSTON, TEXAS 77070 USA U.S.A.
(72)**Name of Inventor :**
1)SAMPATH, RANGAPRASAD
2)DEVARAJAN, VENKATAVARADHAN
3)KANNAN, VIJAY

(57) Abstract :
A method for a network device reporting system state to a controller, the method comprising a network device: determining a system state of the network device; constructing a system state message including a header and a payload; the header including a message type field indicating that the message relates to system state; the payload including a system state notification comprising a system state type field indicating a type of system state which is being communicated, and a value field indicating a system state value; and sending the system state message from the network device to the controller over a software defined networking (SDN) protocol channel

No. of Pages : 38 No. of Claims : 15

(12) PATENT APPLICATION PUBLICATION
(19) INDIA
(22) Date of filing of Application :31/05/2013
(21) Application No.1647/DEL/2013 A
(43) Publication Date : 19/12/2014

(54) Title of the invention : A USER TERMINAL, AN ALERT SYSTEM, AND A NOTIFYING METHOD OF AN ALERT MESSAGE TO A USER TERMINAL

(51) International classification	:G08B, H04W
(31) Priority Document No	:NA
(32) Priority Date	:NA
(33) Name of priority country	:NA
(86) International Application No	:NA
Filing Date	:NA
(87) International Publication No	: NA
(61) Patent of Addition to Application Number	:NA
Filing Date	:NA
(62) Divisional to Application Number	:NA
Filing Date	:NA

(71)**Name of Applicant :**
1)NEC CORPORATION
Address of Applicant :7-1, SHIBA 5-CHOME, MINATO-KU, TOKYO 108-8001, JAPAN
(72)**Name of Inventor :**
1)RITESH KUMAR KALLE
2)SIVABALAN ARUMUGAM
3)ANAND RAGAWA PRASAD

(57) Abstract :
A mobile terminal includes a receiving unit and a decoding unit. the receiving unit receives an alert message including a message header having language information and a message content having a warning notification. the decoding unit decides if the language information matches user preference and notifies alarm information to user based on the warning notification, if the language information matches user preference.

No. of Pages : 50 No. of Claims : 13

(12) PATENT APPLICATION PUBLICATION
(19) INDIA
(22) Date of filing of Application :19/07/2013
(21) Application No.6463/DELNP/2013 A
(43) Publication Date : 19/12/2014

(54) Title of the invention : SYSTEM AND METHOD FOR CONTROLLING A VEHICLE

(51) International classification :B60T17/22
(31) Priority Document No :61/428960
(32) Priority Date :31/12/2010
(33) Name of priority country :U.S.A.
(86) International Application No :PCT/US2011/068090
Filing Date :30/12/2011
(87) International Publication No :WO 2012/092557
(61) Patent of Addition to Application Number :NA
Filing Date :NA
(62) Divisional to Application Number :NA
Filing Date :NA

(71)**Name of Applicant :**
1)GENERAL ELECTRIC COMPANY
Address of Applicant :1 River Road Schenectady NY 12345 U.S.A.
(72)**Name of Inventor :**
1)KUMAR Ajith Kuttannair
2)SHAFFER Glenn Robert
3)COOPER Jared Klineman
4)PELTZ David Michael
5)SMITH Eugene A
6)MCMANUS Brian Joseph
7)HOUPT Paul Kenneth
8)NOFFSINGER Joseph Forrest

(57) Abstract :
A method for vehicle control comprises determining a braking capability of a braking system of a rail vehicle or other vehicle and modifying application of at least one mission parameter by a control system of the vehicle based on the determined braking capability. Braking capability may be determined by activating the braking system of the vehicle to apply a braking force on the vehicle and concurrently applying a level of tractive effort of the vehicle is sufficient to overcome the braking force. The braking capability is determined based on the level of tractive effort.

No. of Pages : 26 No. of Claims : 24

(12) PATENT APPLICATION PUBLICATION
(19) INDIA
(22) Date of filing of Application :19/07/2013
(21) Application No.6464/DELNP/2013 A
(43) Publication Date : 19/12/2014

(54) Title of the invention : NOVEL REINFORCEMENT SYSTEM

(51) International classification :D04H1/00
(31) Priority Document No :61/425949
(32) Priority Date :22/12/2010
(33) Name of priority country :U.S.A.
(86) International Application No :PCT/US2011/066654
Filing Date :21/12/2011
(87) International Publication No :WO 2012/088354
(61) Patent of Addition to Application Number :NA
Filing Date :NA
(62) Divisional to Application Number :NA
Filing Date :NA

(71)**Name of Applicant :**
1)BUTLER James J.
Address of Applicant :2440 W. Majestic Parkway Tucson AZ 85705 U.S.A.
(72)**Name of Inventor :**
1)BUTLER James J.

(57) Abstract :
A novel reinforcement system for maximizing tensile strength and modulus of elasticity per ply for composite systems has one or more pockets with a first pocket edge a second pocket edge a pocket front surface and a pocket rear surface. The pocket front surface and the pocket rear surface each have a pocket cross stitch that perpendicularly traverses the pocket. The pocket traverses the fabric parallel and adjacent to the first fabric edge and the second fabric edge in a warp or 0 degree or x axis direction. The pockets contain one or more fiber tows with a plurality of filaments in a stack.

No. of Pages : 50 No. of Claims : 29

(12) PATENT APPLICATION PUBLICATION
(19) INDIA
(22) Date of filing of Application :24/05/2013
(21) Application No.1583/DEL/2013 A
(43) Publication Date : 19/12/2014

(54) Title of the invention : DISPLAYING RECORDED MULTIMEDIA CONTENT

(51) International classification	:H04L, H04N
(31) Priority Document No	:NA
(32) Priority Date	:NA
(33) Name of priority country	:NA
(86) International Application No	:NA
Filing Date	:NA
(87) International Publication No	: NA
(61) Patent of Addition to Application Number	:NA
Filing Date	:NA
(62) Divisional to Application Number	:NA
Filing Date	:NA

(71)**Name of Applicant :**
1)ALCATEL LUCENT
Address of Applicant :3, avenue Octave Grard 75007 Paris France
(72)**Name of Inventor :**
1)KARUNAMURTHY, Jagannath

(57) Abstract :
The present subject matter discloses a method for displaying recorded multimedia content. The method comprises ascertaining whether connection status of a processing device (102) is one of an idle state and an active state, wherein the idle state indicates non-reception of multimedia content from a central server (106), and wherein the active state indicates reception of multimedia content from the central server (106). Further, recorded multimedia content is obtained based on the ascertaining, wherein the recorded multimedia content is stored in the processing device (102). The method further comprises, providing the recorded multimedia content to a display device (104) coupled to the processing device (102).

No. of Pages : 21 No. of Claims : 13

(12) PATENT APPLICATION PUBLICATION
(19) INDIA
(22) Date of filing of Application :24/05/2013
(21) Application No.1584/DEL/2013 A
(43) Publication Date : 19/12/2014

(54) Title of the invention : FUEL MANAGEMENT DEVICE

(51) International classification	:F02M, H01H
(31) Priority Document No	:NA
(32) Priority Date	:NA
(33) Name of priority country	:NA
(86) International Application No	:NA
Filing Date	:NA
(87) International Publication No	: NA
(61) Patent of Addition to Application Number	:NA
Filing Date	:NA
(62) Divisional to Application Number	:NA
Filing Date	:NA

(71)**Name of Applicant :**
1)CHARANBIR SINGH MARAS
Address of Applicant :CHARANBIR SINGH MARAS C/O GURUCHARAN SINGH RANDHAWA POST. KHUNDA 143 579 DHARIWAL, GURDASPUR PUNJAB, INDIA
(72)**Name of Inventor :**
1)CHARANBIR SINGH MARAS

(57) Abstract :
The present invention discloses a device for managing a usage of combustible fuel comprising housing, a secondary permanent magnet, a secondary stopper, a nozzle and a relay unit. The housing comprises an inlet valve, a primary stopper, a metallic core, a primary coil, a primary permanent magnet, a plunger and a pair of fuel outlet. The inlet valve is connected to a fuel tank of a two-wheeler vehicle. The metallic core is attached with the primary stopper. The primary coil is wrapped around the metallic core. The combination of the primary coil and metallic core performs an electromagnetic function. The primary permanent magnet is attached to the metallic core. The secondary stopper provides an upper limiting position for the secondary permanent magnet. The nozzle provides a fuel flow to a carburettor. The primary coil is connected to the relay unit that take an input from an electric start switch of a vehicle.

No. of Pages : 20 No. of Claims : 10

(12) PATENT APPLICATION PUBLICATION
(19) INDIA
(22) Date of filing of Application :31/05/2013
(21) Application No.1640/DEL/2013 A
(43) Publication Date : 19/12/2014

(54) Title of the invention : DISPLAYING RELEVANT CONTENT OF PRODUCTS/SERVICES BASED ON USER INTERESTED OBJECT PRESENT WITHIN AN IMAGE

(51) International classification	:G06Q	(71)**Name of Applicant :**
(31) Priority Document No	:NA	**1)Nitin Kumar**
(32) Priority Date	:NA	Address of Applicant :A 73 Park Place DLF Phase 5 Gurgaon Delhi India
(33) Name of priority country	:NA	
(86) International Application No	:NA	(72)**Name of Inventor :**
Filing Date	:NA	**1)Nitin Kumar**
(87) International Publication No	: NA	
(61) Patent of Addition to Application Number	:NA	
Filing Date	:NA	
(62) Divisional to Application Number	:NA	
Filing Date	:NA	

(57) Abstract :
The invention provides a method for displaying relevant advertisements of products/services based on a user interested object within an image. The method includes providing a reference script to assign a tag/active spot to each object of the image, publishing the image with the reference script on a digital content platform, and providing a user-actionable interface to activate the tags associated with the published image. Further, the method includes receiving an action performed by a user on the published image, identifying the tag associated with the action performed by the user. Furthermore, the method includes computing relevant advertisements of products/services associated with the identified tag of the published image, and displaying the relevant advertisements of products/services to the user.

No. of Pages : 45 No. of Claims : 44

(12) PATENT APPLICATION PUBLICATION
(19) INDIA
(22) Date of filing of Application :19/07/2013
(21) Application No.6470/DELNP/2013 A
(43) Publication Date : 19/12/2014

(54) Title of the invention : MODIFIED POLY (STYRENE CO MALEIC ANHYDRIDE) AND USES THEREOF

(51) International classification :C08F212/08,C08F122/40,C08F8/32
(31) Priority Document No :2011/00551
(32) Priority Date :21/01/2011
(33) Name of priority country:South Africa
(86) International Application No :PCT/IB2012/000078
Filing Date :20/01/2012
(87) International Publication No :WO 2012/098459
(61) Patent of Addition to Application Number :NA
Filing Date :NA
(62) Divisional to Application Number :NA
Filing Date :NA

(71)**Name of Applicant :**
1)STELLENBOSCH UNIVERSITY
Address of Applicant :4th floor Admin B Victoria Street Stellenbosch Western Cape Province 7600 South Africa
(72)**Name of Inventor :**
1)KLUMPERMAN Lubertus
2)KOCH Klaus Robert
3)LAKAY Eugene Marlin

(57) Abstract :
A polymeric compound is provided having the general formula (A) wherein R is an alkyl chain preferably having from 1 to 6 carbon atoms in the chain which may be either saturated or unsaturated and may have substituents attached to the chain and R and R which may be the same or different from each other and preferably have from 1 to 4 carbon atoms in a chain are selected from alkyl groups substituted or unsubstituted or R and R are linked to form a saturated or unsaturated cyclic moiety incorporating the adjacent nitrogen atom with or without additional heteroatoms in the ring. The polymeric compound is preferably in a particulate form and most particularly in the form of nanoparticles. A method of producing the polymers is disclosed. A method of adsorbing separating and stripping the polymers is also disclosed.

No. of Pages : 26 No. of Claims : 13

(12) PATENT APPLICATION PUBLICATION
(19) INDIA
(22) Date of filing of Application :27/05/2013
(21) Application No.1596/DEL/2013 A
(43) Publication Date : 19/12/2014

(54) Title of the invention : POWERLESS LIFT MECHANISM (PLM)

(51) International classification	:F41K, F03G
(31) Priority Document No	:NA
(32) Priority Date	:NA
(33) Name of priority country	:NA
(86) International Application No	:NA
Filing Date	:NA
(87) International Publication No	: NA
(61) Patent of Addition to Application Number	:NA
Filing Date	:NA
(62) Divisional to Application Number	:NA
Filing Date	:NA

(71)**Name of Applicant :**
1)DR. LOVI GUPTA
Address of Applicant :DR. LOVI RAJ GUPTA BADDI UNIVERSITY OF EMERGING SCIENCES & TECHNOLOGY, VILLAGE-MAKHUMAJRA, BADDI, DISTT-SOLAN, HIMACHAL PRADESH,
(72)**Name of Inventor :**
1)DR. LOVI RAJ GUPTA

(57) Abstract :
The Powerless Lifting Mechanism (PLM) is an innovation done to abolish the usage of electricity for lifting man and material. The design is based on the usage of weight and the pull due to gravity to lift the object whereas the weight is again elevated to its elated position by the travel of subject downwards. This is a unique design wherein the gravity acts as the driving force to pull upwards and the weight travelling downward again makes the system active for the next run downwards. The PLM is based on a unique design of traversing platforms. A platform for weight traversing and the other for load traversing. The wieght platform carries weigth from the upper level to lower level taking the load integrated on the other side of the mechnism on a chain and sprocket assembly. The weight on the need basis is shifted through pneumatic cylinder lift to the weight platform which moves downward with the pull of gravity, this weight pushes the load on the other side of the compound chain assembly placed on a load platform. Powerless Lifitng Mechanism (PLM) will be the next generation mode of raising and elevation from one level to another wich is eco-friendly, 100% efficient, unique and smart.

No. of Pages : 11 No. of Claims : 8

(12) PATENT APPLICATION PUBLICATION
(19) INDIA
(22) Date of filing of Application :19/07/2013
(21) Application No.6475/DELNP/2013 A
(43) Publication Date : 19/12/2014

(54) Title of the invention : ACOUSTIC BUILDING MATERIAL EMPLOYING CHITOSAN

(51) International classification :E04B9/04,E04B9/00
(31) Priority Document No :61/427643
(32) Priority Date :28/12/2010
(33) Name of priority country :U.S.A.
(86) International Application No :PCT/US2011/064148
Filing Date :09/12/2011
(87) International Publication No :WO 2012/091883
(61) Patent of Addition to Application Number :NA
Filing Date :NA
(62) Divisional to Application Number :NA
Filing Date :NA

(71)**Name of Applicant :**
1)USG INTERIORS LLC.
Address of Applicant :550 West Adams Street Chicago Illinois 60661 3676 U.S.A.
(72)**Name of Inventor :**
1)ALBARRAN Enrique L.

(57) Abstract :
An acoustic building material comprising an aqueous slurry of ingredients including fiber filler binder and chitosan homogenously dispersed. The chitosan enhances the dewatering of the building material.

No. of Pages : 12 No. of Claims : 10

(12) PATENT APPLICATION PUBLICATION
(19) INDIA
(22) Date of filing of Application :19/07/2013
(21) Application No.6476/DELNP/2013 A
(43) Publication Date : 19/12/2014

(54) Title of the invention : ROBUST BINDER BONDED GRINDING WHEEL

(51) International classification :B24D3/20,C09K3/14,C09C1/68
(31) Priority Document No :61/427577
(32) Priority Date :28/12/2010
(33) Name of priority country :U.S.A.
(86) International Application No :PCT/US2011/067628
Filing Date :28/12/2011
(87) International Publication No :WO 2012/092388
(61) Patent of Addition to Application Number :NA
Filing Date :NA
(62) Divisional to Application Number :NA
Filing Date :NA

(71)**Name of Applicant :**
1)SAINT GOBAIN ABRASIVES INC.
Address of Applicant :One New Bond Street Worcester Massachusetts 01615 0138 U.S.A.
2)SAINT GOBAIN ABRASIFS
(72)**Name of Inventor :**
1)LI Lingyu

(57) Abstract :
An abrasive tool includes a matrix material and an abrasive grain contained within the matrix material. The matrix material includes a binder and an block copolymer. The block copolymer including a binder miscible block and a binder immiscible block. The binder immiscible block of the block copolymer can form toughening domains within the matrix material. A method of forming an abrasive tool includes blending a binder powder an block copolymer powder and an abrasive grain to form a blended powder shaping the blended powder and curing the blended powder.

No. of Pages : 28 No. of Claims : 74

(12) PATENT APPLICATION PUBLICATION
(19) INDIA
(22) Date of filing of Application :24/05/2013
(21) Application No.1560/DEL/2013 A
(43) Publication Date : 19/12/2014

(54) Title of the invention : PROCESS & FABRICATION OF SILICA BASED INDEX GUIDED NON LINEAR MICRO STRUCTURAL OPTICAL FIBERS WITH OPTIMIZED SUSPENSION OF INNERMOST AIR HOLES

(51) International classification	:C03B, G02B
(31) Priority Document No	:NA
(32) Priority Date	:NA
(33) Name of priority country	:NA
(86) International Application No	:NA
Filing Date	:NA
(87) International Publication No	: NA
(61) Patent of Addition to Application Number	:NA
Filing Date	:NA
(62) Divisional to Application Number	:NA
Filing Date	:NA

(71)**Name of Applicant :**
1)COUNCIL OF SCIENTIFIC & INDUSTRIAL RESEARCH
Address of Applicant :ANUSANDHAN BHAWAN, RAFI MARG, NEW DELHI - 110001, INDIA. Delhi India
(72)**Name of Inventor :**
1)BHADRA SHYAMAL KUMAR
2)GHOSH DEBASHRI
3)PAL MRINMAY
4)PAUL MUKUL CHANDRA

(57) Abstract :
A process of fabricating silica-based index-guided nonlinear microstructured optical fibers (MOF) with optimized suspension of innermost air holes is described where partial and complete sealing techniques are adopted to draw cane of hexagonal air hole structure. In both the cases maintaining proper differential pressure within the capillaries is utmost important to get desired microstructure. Effect of the suspension of the air holes in the innermost ring on the modal effective index is important to achieve higher nonlinearity. This is done by precision control of fiber drawing parameters such as temperature, drawing speed and evacuation pressure. Suspension factor of the innermost air holes surrounding the core, in addition to the air-filling fraction decides the extent of enhancement of nonlinearity which is essential for generating a broad supercontinuum (SC) spectrum with high average power. The present invention helps in producing long length MOF which will be required for developing a SC source for medical applications.

No. of Pages : 29 No. of Claims : 9

(12) PATENT APPLICATION PUBLICATION
(19) INDIA
(22) Date of filing of Application :24/05/2013
(21) Application No.1561/DEL/2013 A
(43) Publication Date : 19/12/2014

(54) Title of the invention : A NON-GENETIC GUANINE RICH 2'-5' LINKED ISO DNA/RNA OLIGOMERS AND PREPARATION THEREOF

(51) International classification	:C12Q, A61K
(31) Priority Document No	:NA
(32) Priority Date	:NA
(33) Name of priority country	:NA
(86) International Application No	:NA
Filing Date	:NA
(87) International Publication No	: NA
(61) Patent of Addition to Application Number	:NA
Filing Date	:NA
(62) Divisional to Application Number	:NA
Filing Date	:NA

(71)**Name of Applicant :**
1)COUNCIL OF SCIENTIFIC & INDUSTRIAL RESEARCH
Address of Applicant :ANUSANDHAN BHAWAN, RAFI MARG, NEW DELHI - 110001, INDIA. Delhi India
(72)**Name of Inventor :**
1)VAIJAYANTI ANIL KUMAR
2)ANITA DINKAR GUNJAL
3)MONEESHA FERNANDES

(57) Abstract :
The present invention relates to G-quadruplex forming isoDNA aptamers and a process for the preparation thereof. The present invention further relates to a stable, non-genetic, guanine rich 2- 5 linked isoDNA selected from 3 deoxy 2-5 isoDNA and 3 deoxy 2 - 5 isoI)NA-isoKNA hybrid. lhe instant 2-5 linked isoDNA such as tlie throtiibiti binding aptamer (isoTBA) can be used in deep vein thrombosis, where prolonged anticoagulant activity is required.

No. of Pages : 30 No. of Claims : 10

(12) PATENT APPLICATION PUBLICATION
(19) INDIA
(22) Date of filing of Application :19/07/2013
(21) Application No.6481/DELNP/2013 A
(43) Publication Date : 19/12/2014

(54) Title of the invention : SLURRY DISTRIBUTOR SYSTEM AND METHOD FOR USING SAME

(51) International classification :B28B19/00,B05C5/02
(31) Priority Document No :61/428706
(32) Priority Date :30/12/2010
(33) Name of priority country :U.S.A.
(86) International Application No :PCT/US2011/068167
Filing Date :30/12/2011
(87) International Publication No :WO 2012/092582
(61) Patent of Addition to Application Number :NA
Filing Date :NA
(62) Divisional to Application Number :NA
Filing Date :NA

(71)**Name of Applicant :**
1)UNITED STATES GYPSUM COMPANY
Address of Applicant :550 West Adams Street Chicago Illinois 60661 U.S.A.
(72)**Name of Inventor :**
1)LI Alfred
2)LEE Chris C.
3)NELSON Chris
4)CHAN Cesar
5)SONG Weixin David
6)WITTBOLD James
7)SCHENCK Ronald E.
8)LORING Curt
9)RAGO William

(57) Abstract :
A slurry distribution system can include a feed conduit and a distribution conduit in fluid communication therewith. The feed conduit can include a first feed inlet and a second feed inlet disposed in spaced relationship thereto. The distribution conduit can extend generally along a longitudinal axis and include an entry portion and a distribution outlet in fluid communication therewith. The entry portion is in fluid communication with the first and second feed inlets of the feed conduit. The distribution outlet extends a predetermined distance along a transverse axis which is substantially perpendicular to the longitudinal axis. The slurry distribution system can be placed in fluid communication with a gypsum slurry mixer adapted to agitate water and calcined gypsum to form an aqueous calcined gypsum slurry.

No. of Pages : 77 No. of Claims : 20

(12) PATENT APPLICATION PUBLICATION
(19) INDIA
(22) Date of filing of Application :19/07/2013
(21) Application No.6482/DELNP/2013 A
(43) Publication Date : 19/12/2014

(54) Title of the invention : METHOD AND EQUIPMENT FOR THE AUTOMATED TESTING OF MICROBIOLOGICAL SAMPLES

(51) International classification :C12Q1/04,C12M1/34,C12M1/107
(31) Priority Document No :NA
(32) Priority Date :NA
(33) Name of priority country :NA
(86) International Application No :PCT/FI2010/000078
Filing Date :28/12/2010
(87) International Publication No :WO 2012/104468
(61) Patent of Addition to Application Number :NA
Filing Date :NA
(62) Divisional to Application Number :NA
Filing Date :NA

(71)**Name of Applicant :**
1)HAKALEHTO Eino Elias
Address of Applicant :Kasarmikatu 12 C 1 FI 70110 Kuopio Finland
(72)**Name of Inventor :**
1)HAKALEHTO Eino Elias

(57) Abstract :
By using the method and equipment according to this invention it is possible to analyse rapidly a large number of microbiological culture samples or alternatively of liquid phase samples based on the gases or gaseous compounds released by them. This invention exploits generally a sample line along which the samples move and it can be used for the microbial control tasks in hospitals industry hygiene and environmental fields. In this system gas is led into the culture vessels during the growth of the microbe and gases released by the culture or liquids derived from them are collected into the chambers capsules or equivalents.

No. of Pages : 15 No. of Claims : 15

(12) PATENT APPLICATION PUBLICATION
(19) INDIA
(22) Date of filing of Application :16/05/2013
(21) Application No.1464/DEL/2013 A
(43) Publication Date : 19/12/2014

(54) Title of the invention : APPARATUS AND METHOD FOR ENABLING CONTINUOUS DECONTAMINATION OF MIXED WASTE PLASTIC FEEDSTOCK

(51) International classification	:C10G, F27B
(31) Priority Document No	:NA
(32) Priority Date	:NA
(33) Name of priority country	:NA
(86) International Application No	:NA
Filing Date	:NA
(87) International Publication No	: NA
(61) Patent of Addition to Application Number	:NA
Filing Date	:NA
(62) Divisional to Application Number	:NA
Filing Date	:NA

(71)**Name of Applicant :**
1)TANDON Amit
Address of Applicant :H.No 75, Sector 7, Panchkula (Haryana), India
(72)**Name of Inventor :**
1)TANDON Amit

(57) Abstract :
An apparatus (100) for enabling continuous decontamination of mixed waste plastic feedstock is provided. The apparatus (100) includes a furnace vessel (102), wherein the furnace vessel (102) is configured to provide a predetermined residence time chosen between 1 hour and 10 hours to the mixed waste plastic feedstock and heat the mixed waste plastic feedstock to temperature chosen between 250 0 C and 400 0 C, before the feedstock exits the furnace vessel (102). Further an inlet (104) is configured to deliver the feedstock towards the bottom of the furnace vessel (102). Furthermore, a feedstock outlet (106) is provided towards the top of the furnace vessel (102), wherein the feedstock outlet (106) is configured to discharge the heated feedstock from the furnace vessel (102).

No. of Pages : 29 No. of Claims : 28

(12) PATENT APPLICATION PUBLICATION
(19) INDIA
(22) Date of filing of Application :30/05/2013
(21) Application No.1626/DEL/2013 A
(43) Publication Date : 19/12/2014

(54) Title of the invention : SOLAR THERMAL SIPHON PUMP SYSTEM FOR IRRIGATION

(51) International classification :F24J
(31) Priority Document No :NA
(32) Priority Date :NA
(33) Name of priority country :NA
(86) International Application No :NA
Filing Date :NA
(87) International Publication No : NA
(61) Patent of Addition to Application Number :NA
Filing Date :NA
(62) Divisional to Application Number :NA
Filing Date :NA

(71)**Name of Applicant :**
1)DR. GOPAL PRASAD SINHA
Address of Applicant :C 5/11, TATA STEEL OFFICER ENVLAVE, SECTOR-BETA 1, GREATER NOIDA, UP. INDIA-201306. Uttar Pradesh India
2)KAUSHALENDRA KUMAR DUBEY
(72)**Name of Inventor :**
1)DR. GOPAL PRASAD SINHA
2)KAUSHALENDRA KUMAR DUBEY

(57) Abstract :
This invention is the development of solar energy based pump for liquid pumping to a heights / Head (H). The most attractive part of the pump is the absence of any moving part, which makes it almost maintenance /free. Solar thermal energy is used to create a pressure higher than the atmospheric pressure over the surface of liquid to be pumped to height H. The pressure lifts the liquid through a tube dipped in the liquid and delivers at a head H given by H = (PC-Pa)/pg. Where PC is pressure created by solar energy, Pa is atmospheric pressure, p is mass density of liquid and g is acceleration due to gravity. Description- Solar thermal siphon pump system may be used to lift water from the ground or any liquid to a height without using any moving mechanical-part by use pressurized steam through siphon action. The pressurised steam is generated by solar energy concentrated on a tube field with the liquid. This concentration of solar energy can be achieve by parabolic (PTC) (part 2 of figure no I),/ concave1 Plane mirrors type solar concentrator or through fresnel lenses based solar thermal system. Water/ Liquid enters into a boiler cell (part 3 of figure no I), through an inlet regulated by a float valve action (part 1 of figure no I), to maintaining a uniform level. Steam/ Vapour generated in the boiler cell flows through a perfectly insulated and sealed pipe (part 4 of figure no I), and enters into an enclosures connected to ground water or the source of liquid to the pumped (part 6 of figure no l).The discharge pipe (part 5 of figure no I), dipped in to ground water or the source of 1iquid.The pressurised steamhapour lifts the liquid to discharged height H, through a siphon action. The conversion of water into steam at boiling temperature of water depends upon the thermal energy obtained from the effective area of concentrator (Aperture Area of concentrator) and heat raises the temperature of boiler cell and water converts into steam through conduction. The water feeding system connect from ground water or source of liquid to boiler cell through the boiler water feeding pipe (part 7 of figure no I), some amount of steam pressure use for water feeding in boiler cell. All parts is shown in schematic of Solar thermal siphon system pump system.

No. of Pages : 5 No. of Claims : 2

(12) PATENT APPLICATION PUBLICATION
(19) INDIA
(22) Date of filing of Application :19/07/2013
(21) Application No.6491/DELNP/2013 A
(43) Publication Date : 19/12/2014

(54) Title of the invention : ILLUMINATED POLE

(51) International classification :E04H15/10,F21V21/00
(31) Priority Document No :2010905560
(32) Priority Date :20/12/2010
(33) Name of priority country :Australia
(86) International Application No :PCT/AU2011/001643
Filing Date :20/12/2011
(87) International Publication No :WO 2012/083354
(61) Patent of Addition to Application Number :NA
Filing Date :NA
(62) Divisional to Application Number :NA
Filing Date :NA

(71)**Name of Applicant :**
1)DOBLE Simon
Address of Applicant :3/4 Sentosa 115 Peregian Springs Drive Peregian Springs Queensland 4573 Australia
(72)**Name of Inventor :**
1)DOBLE Simon

(57) Abstract :
The present invention provides an illumination device comprising an elongated support element (10) with an illumination source (20) integrated therein. Preferably the elongated element is collapsible telescopic or resiliently flexible. It may comprise a plurality of sections (11 12) which are adapted to reciprocate between a retracted configuration and an extended configuration. The device is particularly suitable for temporary or collapsible structures such as tents umbrellas awnings shades or the like.

No. of Pages : 37 No. of Claims : 36

(12) PATENT APPLICATION PUBLICATION
(19) INDIA
(22) Date of filing of Application :24/05/2013
(21) Application No.1555/DEL/2013 A
(43) Publication Date : 19/12/2014

(54) Title of the invention : A FLEXIBLE SOFTWARE TESTING SYSTEM BY INCORPORATING CHANGE POINT IN SRG

(51) International classification :G06F
(31) Priority Document No :NA
(32) Priority Date :NA
(33) Name of priority country :NA
(86) International Application No :NA
Filing Date :NA
(87) International Publication No : NA
(61) Patent of Addition to Application Number :NA
Filing Date :NA
(62) Divisional to Application Number :NA
Filing Date :NA

(71)**Name of Applicant :**
1)AMITY UNIVERSITY
Address of Applicant :AMITY UNIVERSITY CAMPUS SECTOR-125, NOIDA-201303, Uttar Pradesh India
(72)**Name of Inventor :**
1)DR. DEEPAK KUMAR

(57) Abstract :
The present invention relates to a system for software testing which incorporates change point in Software Reliability Growth considering the learning and expertise gained by testing team as testing progresses with two types of Imperfect Debugging. The system is embedded as hardware to check quality of sofiware or hardware which can be used as USB device or USB token.

No. of Pages : 20 No. of Claims : 5

(12) PATENT APPLICATION PUBLICATION
(19) INDIA
(22) Date of filing of Application :24/05/2013
(21) Application No.1556/DEL/2013 A
(43) Publication Date : 19/12/2014

(54) Title of the invention : NANOCELLULOSE AND SILVER NANO EMBEDDED PEBBLES BASED COMPOSITE FOR COMPLETE REMOVAL OF DYES, HEAVY METALS AND MICROBIAL LOAD FROM WATER

(51) International classification	:C02F, A61L
(31) Priority Document No	:NA
(32) Priority Date	:NA
(33) Name of priority country	:NA
(86) International Application No	:NA
Filing Date	:NA
(87) International Publication No	: NA
(61) Patent of Addition to Application Number	:NA
Filing Date	:NA
(62) Divisional to Application Number	:NA
Filing Date	:NA

(71)**Name of Applicant :**
1)AMITY UNIVERSITY
Address of Applicant :AMITY UNIVERSITY CAMPUS SECTOR-125, NOIDA-201303, UP,INDIA Delhi India
(72)**Name of Inventor :**
1)ABHISHEK KARDAM
2)SUMAN
3)MEETA GERA
4)VINOD KUMAR JAIN

(57) Abstract :
Water purification system comprising nanocel embedded pebbles based composite material The present invention relates to nanocellulose and silver nanoparticle embedded pebbles based water purification system for complete removal of dyes, heavy metals such as but not limited to Cr (Ill), Pb (11) and Cd (11) and microbial load from waste water. The nanocellulose and silver nanoparticle embedded pebbles based composite material is used as a water filter in a column to provide a simple, low cost and an alternative environment friendly method for decontamination of waste water. The composite can be reused upt washing it with a solution of pH 2.

No. of Pages : 19 No. of Claims : 8

(12) PATENT APPLICATION PUBLICATION
(19) INDIA
(22) Date of filing of Application :29/05/2013
(21) Application No.1615/DEL/2013 A
(43) Publication Date : 19/12/2014

(54) Title of the invention : PENTACENE DEPOSITION IN ORGANIC THIN FILM TRANSISTORS

(51) International classification :H01L
(31) Priority Document No :NA
(32) Priority Date :NA
(33) Name of priority country :NA
(86) International Application No :NA
Filing Date :NA
(87) International Publication No : NA
(61) Patent of Addition to Application Number :NA
Filing Date :NA
(62) Divisional to Application Number :NA
Filing Date :NA

(71)**Name of Applicant :**
1)INDIAN INSTITUTE OF TECHNOLOGY, KANPUR
Address of Applicant :DEAN, RESEARCH & DEVELOPMENT, 255, FACULTY BUILDING, IIT KANPUR-208016, INDIA Uttar Pradesh India
(72)**Name of Inventor :**
1)MANDAL, TAPENDU
2)GUPTA DEEPAK
3)GARG, ASHISH

(57) Abstract :
In accordance with one embodiment of present subject matter, a method to deposit pentacene on a plane of a dielectric layer (108) is described. The method comprises generating a set of electrodes (110) on the plane of the dielectric layer (108) and applying a potential difference across the set of generated electrodes (110). The potential difference so applied between the electrodes (110) generates an electric field substantially parallel to the plane of the dielectric layer (108). The pentacene is then deposited on the plane of the dielectric layer (108) under effect of the generated electric field.

No. of Pages : 21 No. of Claims : 12

(12) PATENT APPLICATION PUBLICATION
(19) INDIA
(22) Date of filing of Application :19/07/2013
(21) Application No.6487/DELNP/2013 A
(43) Publication Date : 19/12/2014

(54) Title of the invention : SPLIT CYCLE AIR HYBRID ENGINE WITH DWELL CAM

(51) International classification :F02B75/32,F16C7/00
(31) Priority Document No :61/436742
(32) Priority Date :27/01/2011
(33) Name of priority country :U.S.A.
(86) International Application No :PCT/US2012/022839
Filing Date :27/01/2012
(87) International Publication No :WO 2012/103406
(61) Patent of Addition to Application Number :NA
Filing Date :NA
(62) Divisional to Application Number :NA
Filing Date :NA

(71)**Name of Applicant :**
1)SCUDERI GROUP INC.
Address of Applicant :1111 Elm Street Suite 33 West Springfield MA 01089 U.S.A.
(72)**Name of Inventor :**
1)MELDOLESI Riccardo
2)SCHWOERER John
3)BADAIN Nick
4)LACY Clive

(57) Abstract :
Devices and related methods are disclosed that generally involve actuating an engine valve with a cam having a dwell section. These devices and methods have application in split cycle engines air hybrid engines conventional engines and/or various combinations thereof. Both inwardly and outwardly opening valves can be actuated with the devices and methods disclosed herein. Additional valve train elements are disclosed including rockers lost motion systems and valve seating control devices.

No. of Pages : 52 No. of Claims : 34

(12) PATENT APPLICATION PUBLICATION
(19) INDIA
(22) Date of filing of Application :19/07/2013
(21) Application No.6488/DELNP/2013 A
(43) Publication Date : 19/12/2014

(54) Title of the invention : AMINOINDANE COMPOUNDS AND USE THEREOF IN TREATING PAIN

(51) International classification :C07D207/09,C07D211/26,C07D401/12
(31) Priority Document No :61/444379
(32) Priority Date :18/02/2011
(33) Name of priority country :U.S.A.
(86) International Application No :PCT/US2012/025759
Filing Date :18/02/2012
(87) International Publication No :WO 2012/112969
(61) Patent of Addition to Application Number :NA
Filing Date :NA
(62) Divisional to Application Number :NA
Filing Date :NA

(71)**Name of Applicant :**
1)ENDO PHARMACEUTICALS INC.
Address of Applicant :100 Endo Boulevard Chadds Ford PA 19317 U.S.A.
(72)**Name of Inventor :**
1)THOMPSON Scott Kevin
2)PRIESTLEY Tony
3)SMITH Roger Astbury
4)SAHA Ashis K.
5)RUDRA Sonali
6)HAJRA Arun Kuma
7)CHATTERJEE Dipanwita
8)BEHRENS Carl Henry
9)HE Yigang
10)LI Hui Yin

(57) Abstract :
The present application provides novel aminoindane compounds and methods for preparing and using these compounds. These compounds are useful in treating pain and/or itch in patients by administering one or more of the compounds to a patient. The methods include administering a compound of formula (I) or (II) and a TRPVl receptor activator. In one embodiment the TRPVl receptor activator is lidocaine.

No. of Pages : 226 No. of Claims : 71

(12) PATENT APPLICATION PUBLICATION
(19) INDIA
(22) Date of filing of Application :19/07/2013
(21) Application No.6489/DELNP/2013 A
(43) Publication Date : 19/12/2014

(54) Title of the invention : MIXING OF THE CONTENT OF A FLEXIBLE CONTAINER FOR BIOPHARMACEUTICAL USE

(51) International classification :B01F11/00,B01F15/00
(31) Priority Document No :1061091
(32) Priority Date :22/12/2010
(33) Name of priority country :France
(86) International Application No :PCT/FR2011/053141
Filing Date :21/12/2011
(87) International Publication No :WO 2012/085470
(61) Patent of Addition to Application Number :NA
Filing Date :NA
(62) Divisional to Application Number :NA
Filing Date :NA

(71)**Name of Applicant :**
1)SARTORIUS STEDIM BIOTECH S.A.
Address of Applicant :Z.I. des Paluds Avenue de Jouques F 13781 Aubagne France
(72)**Name of Inventor :**
1)CUTING Jonathan

(57) Abstract :
A receptacle (1) for biopharmaceutical use comprises a flexible container (2) having a wall (4), an internal space (5) for receiving a liquid or pasty biopharmaceutical content, mixing means (20) adjacent to a given portion (21) of the wall (4), means (22) for rigid and leaktight connection between the mixing means (20) and the given portion (21), the mixing means (20) comprising a sleeve (24), a suction-delivery opening (26), a suction-delivery part (28), a suction-delivery cavity (29), drive means (23) for driving in an alternating forward/backward axial sliding sequence, means (32) for immobilizing the sleeve and the given portion (21), including during the axial sliding movement of the suction-delivery part (28).

No. of Pages : 49 No. of Claims : 34

(12) PATENT APPLICATION PUBLICATION
(19) INDIA
(22) Date of filing of Application :21/05/2013
(21) Application No.1513/DEL/2013 A
(43) Publication Date : 19/12/2014

(54) Title of the invention : FILTER FOR INTERNAL COMBUSTION ENGINES

(51) International classification :B01D
(31) Priority Document No :NA
(32) Priority Date :NA
(33) Name of priority country :NA
(86) International Application No :NA
Filing Date :NA
(87) International Publication No : NA
(61) Patent of Addition to Application Number :NA
Filing Date :NA
(62) Divisional to Application Number :NA
Filing Date :NA

(71)**Name of Applicant :**
1)UFI FILTERS S.P.A.
Address of Applicant :26, Via Europa, I-46047 Porto Mantovano, Mantova, Italy
(72)**Name of Inventor :**
1)GIRONDI, Giorgio

(57) Abstract :
Filter for internal combustion engine liquids, comprising a casing (2) closed by a removable cover (4) and containing a toroidal filter cartridge (3) which separates the casing cavity into two chambers (21, 22) for passage of the liquid to be filtered and passage of the filtered liquid respectively, in which the inner region of the cover is connected to the facing end of the cartridge by a snap connection system comprising two complementary parts (10, 111) which are associated with the cover and with the cartridge respectively, and can be connected together by axially sliding said cartridge and released from each other by rotating this latter through a predetermined angle, that part of the system associated with the cartridge being located within the central compartment of this latter, and that part of the system associated with the cover being dimensioned and shaped to be able to be inserted into the preceding and coupled thereto, where it retains the facing end of the cartridge in the immediate vicinity of the inner region of the cover.

No. of Pages : 13 No. of Claims : 6

(12) PATENT APPLICATION PUBLICATION
(19) INDIA
(22) Date of filing of Application :21/05/2013
(21) Application No.1515/DEL/2013 A
(43) Publication Date : 19/12/2014

(54) Title of the invention : AUTOMATIC VISCOMETER

(51) International classification :G01N
(31) Priority Document No :NA
(32) Priority Date :NA
(33) Name of priority country :NA
(86) International Application No :NA
Filing Date :NA
(87) International Publication No : NA
(61) Patent of Addition to Application Number :NA
Filing Date :NA
(62) Divisional to Application Number :NA
Filing Date :NA

(71)**Name of Applicant :**
1)RBEF, NEW DELHI
Address of Applicant :B-27, DEFENCE COLONY, NEW DELHI Delhi India
(72)**Name of Inventor :**
1)SHASHI CHAWLA

(57) Abstract :
The present invention relates to the improved viscometer to measure coefficient of viscosity using sensors. The liquid whose viscosity is to be measured is poured in funnel where the liquid flows towards bulb through the rubber tube and capillary. The liquid flows back and the sensing mechanism note down the time of flow of liquid from etched mark A to the etched mark B. The procedure is repeated number of times. The advantages of improved viscometer include easy to use, free from human errors, saves resources and time.

No. of Pages : 11 No. of Claims : 2

(12) PATENT APPLICATION PUBLICATION
(19) INDIA
(22) Date of filing of Application :19/07/2013
(21) Application No.6501/DELNP/2013 A
(43) Publication Date : 19/12/2014

(54) Title of the invention : METHOD FOR INTRODUCING NETWORK CONGESTION PREDICTIONS IN POLICY DECISION

(51) International classification :H04W28/12,H04L12/56
(31) Priority Document No :NA
(32) Priority Date :NA
(33) Name of priority country :NA
(86) International Application No :PCT/IB2011/050823
Filing Date :25/02/2011
(87) International Publication No :WO 2012/131424
(61) Patent of Addition to Application Number :NA
Filing Date :NA
(62) Divisional to Application Number :NA
Filing Date :NA

(71)**Name of Applicant :**
1)TELEFONAKTIEBOLAGET L M ERICSSON (PUBL)
Address of Applicant :S 164 83 Stockholm Sweden
(72)**Name of Inventor :**
1)CARNERO ROS Roberto David
2)P‰REZ LAINEZ Rebeca Beatriz

(57) Abstract :
There is provided a Congestion Prediction Engine CPE of a Policy and Charging Control PCX architecture. The PCC architecture also has a congestion database a Policy and Charging Enforcement Function PCEF device and a Policy and Charging Roles Function PCRF node. The CPE includes a processing unit of the CPE which defines a currently applicable congestion prediction. The CPE includes a network; interface unit of the CPE which defines from the congestion database actual congestion data for a latest time period. The processing unit of the CPE determines a subsequent congestion prediction for a subsequent time period by comparing the currently applicable congestion prediction with the actual congestion data and by applying machine learning techniques. The CPE includes a memory of the CPE in which the currently applicable congestion prediction is replaced with the subsequent congestion prediction. The network interface unit of the CPE sends to a network entity the currently applicable congestion prediction so the PCRF can make a policy decision with quality of service QoS based on the currently applicable congestion prediction upon establishment or modification of an IP Connectivity Access Network IP CAN session for a user. A Policy and Charging Rules Function PCRF node of a Policy and Charging Control PCC architecture for making policy decisions based on network congestion. There is provided a method of a Congestion Prediction Engine CPE of a Policy and Charging Control PCC architecture and a method of making policy decisions at a Policy and Charging Control PCC architecture based on network congestion.

No. of Pages : 28 No. of Claims : 20

(12) PATENT APPLICATION PUBLICATION
(19) INDIA
(22) Date of filing of Application :19/07/2013
(21) Application No.6502/DELNP/2013 A
(43) Publication Date : 19/12/2014

(54) Title of the invention : PHENYL ISOXAZOL DERIVATIVES AND PREPARATION PROCESS THEREOF

(51) International classification :C07D413/06,A61K31/496,A61P31/16
(31) Priority Document No :1020110036172
(32) Priority Date :19/04/2011
(33) Name of priority country :Republic of Korea
(86) International Application No :PCT/KR2012/002362
Filing Date :30/03/2012
(87) International Publication No :WO 2012/144752
(61) Patent of Addition to Application Number :NA
Filing Date :NA
(62) Divisional to Application Number :NA
Filing Date :NA

(71)**Name of Applicant :**
1)IL YANG PHARM. CO. LTD.
Address of Applicant :182 4 Hagal dong Giheung gu Yongin si Gyunggi do 446 726 Republic of Korea
(72)**Name of Inventor :**
1)KIM Dong Yeon
2)CHO Dae Jin
3)LEE Gong Yeal
4)KIM Hong Youb
5)WOO Seok Hun
6)LEE Hae Un
7)KIM Sung Moo
8)AHN Choong Am
9)YOON Seung Bin

(57) Abstract :
Disclosed are a phenyl isoxazol derivative compound which is useful as a treatment material for virus infection especially infection of an influenza virus or its pharmaceutically acceptable derivative a preparation method thereof and an illness treatment pharmaceutical composition including the compound as an active ingredient.

No. of Pages : 93 No. of Claims : 17

(12) PATENT APPLICATION PUBLICATION
(19) INDIA
(22) Date of filing of Application :19/07/2013
(21) Application No.6503/DELNP/2013 A
(43) Publication Date : 19/12/2014

(54) Title of the invention : SYSTEMS AND METHODS FOR GROUP BANDWIDTH MANAGEMENT IN A COMMUNICATION SYSTEMS NETWORK

(51) International classification :H04L12/56,H04L12/24
(31) Priority Document No :61/433908
(32) Priority Date :18/01/2011
(33) Name of priority country :U.S.A.
(86) International Application No :PCT/US2012/021596
Filing Date :17/01/2012
(87) International Publication No :WO 2012/099901
(61) Patent of Addition to Application Number :NA
Filing Date :NA
(62) Divisional to Application Number :NA
Filing Date :NA

(71)**Name of Applicant :**
1)NOMADIX INC.
Address of Applicant :30851 Agoura Road Suite 102 Agoura Hills CA 91301 U.S.A.
(72)**Name of Inventor :**
1)OLSHANSKY Vadim

(57) Abstract :
An embodiment is a method of managing bandwidth performed by a computing system. The system receives user selected connection parameters associated with a subscriber device. The system associates a network identifier of the subscriber device with a group bandwidth policy based on the user selected connection parameters. The system stores in computer readable storage media parameters associated with the group bandwidth policy in association with the network identifier of the subscriber device. The system receives at a gateway device network communication data from the subscriber device. The system limits at the gateway device bandwidth available to the network communication data based on the stored parameters associated with the group bandwidth policy.

No. of Pages : 49 No. of Claims : 20

(12) PATENT APPLICATION PUBLICATION
(19) INDIA
(22) Date of filing of Application :19/07/2013
(21) Application No.6504/DELNP/2013 A
(43) Publication Date : 19/12/2014

(54) Title of the invention : HUMAN LACTOFERRIN BASED PEPTIDES HAVING ANTIINFLAMMATORY ACTIVITY

(51) International classification :C07K14/79,A61K38/40
(31) Priority Document No :11152213.2
(32) Priority Date :26/01/2011
(33) Name of priority country :EPO
(86) International Application No :PCT/EP2012/051111
Filing Date :25/01/2012
(87) International Publication No :WO 2012/101156
(61) Patent of Addition to Application Number :NA
Filing Date :NA
(62) Divisional to Application Number :NA
Filing Date :NA

(71)**Name of Applicant :**
1)PERGAMUM AB
Address of Applicant :Banvaktsvgen 12 SE 171 48 Solna Sweden
(72)**Name of Inventor :**
1)MAHLAPUU Margit
2)BJ–RN Camilla
3)SJ–STRAND Veronika
4)WALSE Bjrn
5)SVENSSON Bo

(57) Abstract :
The present invention relates to new peptides and to use thereof in particular for treatment and/or prevention of infections inflammations pain wounds scar and/or tumours.

No. of Pages : 68 No. of Claims : 19

(12) PATENT APPLICATION PUBLICATION
(19) INDIA
(22) Date of filing of Application :19/07/2013
(21) Application No.6505/DELNP/2013 A
(43) Publication Date : 19/12/2014

(54) Title of the invention : COOLING UNIT AND METHOD

(51) International classification :F24F1/00
(31) Priority Document No :NA
(32) Priority Date :NA
(33) Name of priority country :NA
(86) International Application No :PCT/CN2011/070172
Filing Date :11/01/2011
(87) International Publication No :WO 2012/094806
(61) Patent of Addition to Application Number :NA
Filing Date :NA
(62) Divisional to Application Number :NA
Filing Date :NA

(71)**Name of Applicant :**
1)SCHNEIDER ELECTRIC IT CORPORATION
Address of Applicant :132 Fairgrounds Road West Kingston Rhode Island 02892 U.S.A.
(72)**Name of Inventor :**
1)LONG Rong
2)YU Jinhua
3)ZHOU Ting

(57) Abstract :
A cooling unit (10) includes a housing (12) having a front (14) and a back (16) one or more fans (28) provided at either the front (14) or the back (16) of the housing (12) and a V shaped evaporator (30) positioned within the housing (12) and coupled to a source of liquid refrigerant. The V shaped evaporator (30) has two panels extending from adjacent to the bottom (22) of the housing to adjacent to the top (24) of the housing (12) when positioning the evaporator (30) in the housing (12). The arrangement is such that an inside of the panels of the evaporator (30) faces air being drawn through the housing (12) of the cooling unit (10) by the fan (28).

No. of Pages : 23 No. of Claims : 20

(12) PATENT APPLICATION PUBLICATION
(19) INDIA
(22) Date of filing of Application :19/07/2013
(21) Application No.6506/DELNP/2013 A
(43) Publication Date : 19/12/2014

(54) Title of the invention : NAPHTHA ISOMERISATION ON THREE CATALYTIC REACTION ZONES INSIDE A DISTILLATION COLUMN

(51) International classification	:C10G45/00,C10G65/00,C07C5/00
(31) Priority Document No	:61/434427
(32) Priority Date	:19/01/2011
(33) Name of priority country	:U.S.A.
(86) International Application No	:PCT/RU2012/000038
Filing Date	:18/01/2012
(87) International Publication No	:WO 2012/099506
(61) Patent of Addition to Application Number	:NA
Filing Date	:NA
(62) Divisional to Application Number	:NA
Filing Date	:NA

(71)**Name of Applicant :**
1)LIMITED COMPANY REACTIVE RECTIFICATION TECHNOLOGY
Address of Applicant :ul. Serpukhovskaya 10 lit. St.Petersburg 190013 Russia
(72)**Name of Inventor :**
1)GIYAZOV Oleg Valerievich
2)PARPUTS Oleg Igorevich

(57) Abstract :
A reaction rectification system for producing high octane petrol components is proposed the system comprising at least three reaction zones one of which is a benzene hydroisomerization zone another is a hexane isomerization zone and the third is a pentane isomerization zone wherein the benzene hydroisomerization zone is arranged at a lower point than all of the remaining reaction zones and is located in the lower part of a column the hexane isomerization zone is located higher than a feed zone and lower than the pentane isomerization zone and the system also comprises at least one lateral extraction means arranged higher than the hexane isomerization zone and lower than the pentane isomerization zone.

No. of Pages : 19 No. of Claims : 22

(12) PATENT APPLICATION PUBLICATION
(19) INDIA
(22) Date of filing of Application :29/05/2013
(21) Application No.1610/DEL/2013 A
(43) Publication Date : 19/12/2014

(54) Title of the invention : FUEL FILLED DISPLAY METER FOR VEHICLES

(51) International classification	:G01F, G07C
(31) Priority Document No	:NA
(32) Priority Date	:NA
(33) Name of priority country	:NA
(86) International Application No	:NA
Filing Date	:NA
(87) International Publication No	: NA
(61) Patent of Addition to Application Number	:NA
Filing Date	:NA
(62) Divisional to Application Number	:NA
Filing Date	:NA

(71)**Name of Applicant :**
1)GUPTA ARPEET,
Address of Applicant :R.O B-32, SHANKRACHARYA ROAD, ADARSH NAGAR, NEW DELHI-110033. Delhi India
2)SRIVASTAVA SANKALP
3)GOEL RAHUL
(72)**Name of Inventor :**
1)GUPTA ARPEET
2)SRIVASTAVA SANKALP,
3)GOEL RAHUL

(57) Abstract :
The Invention provides a device to calculate and display digitally in numerals the exact quantity of fuel in millilitres (ml) /litres filled in the fuel tank of the vehicle whenever the vehicle is being refilled. The device further provides the exact quantity of fuel present in the fuel tank of the vehicle at any given time. The device provides the exact quantity of fuel used /burnt by the vehicle in a particular the exact quantity of fuel in millilitres (ml) /litres filled in the distance travelled .The fuel meter in the vehicles show the analog value of fuel in the fuel tank which only provides a rough estimate and it only reflects the quantity of fuel by the position of a needle in the fuel meter viz. fully-filled, half-filled and empty and further the fuel meter does not reflects the quantity of fuel being filled in the vehicle at the time of re-filling. The basic drawback is the lack of exact data as to how much quantity of fuel in millilitres/ litres is present in the fuel tank of the vehicle or in any vessel/tank at any stage. Hence the invention provides a solution by calculating and displaying digitally the exact quantity of fuel in the fuel tank in Millilitres/litres and further provides the exact quantity of fuel filled in the tank of a vehicle whenever the vehicle is being refilled and the history of fuel filled can also be seen along with the mileage for a particular distance travelled. The fuel meter consists of Sensor, Micro Controller and a display unit with Toggle Button. The Sensor is installed in the fuel tank of the vehicle, which senses the quantity of fuel and send voltage to the microprocessor which in turn process the voltage to provide the exact quantity of fuel present in the fuel tank every ten seconds and display it in digital form on the display unit installed in the dash board of the vehicle.

No. of Pages : 18 No. of Claims : 4

(12) PATENT APPLICATION PUBLICATION
(19) INDIA
(22) Date of filing of Application :19/07/2013
(21) Application No.6509/DELNP/2013 A
(43) Publication Date : 19/12/2014

(54) Title of the invention : CONFIGURABLE RACK AND RELATED METHODS

(51) International classification :H05K7/14
(31) Priority Document No :12/982256
(32) Priority Date :30/12/2010
(33) Name of priority country :U.S.A.
(86) International Application No :PCT/US2011/063718
Filing Date :07/12/2011
(87) International Publication No :WO 2012/091872
(61) Patent of Addition to Application Number :NA
Filing Date :NA
(62) Divisional to Application Number :NA
Filing Date :NA

(71)**Name of Applicant :**
1)SCHNEIDER ELECTRIC IT CORPORATION
Address of Applicant :132 Fairgrounds Road West Kingston RI 02892 U.S.A.
(72)**Name of Inventor :**
1)SILBERBAUER Kristian
2)TINGSKOV Carsten Nommensen
3)SCHMIDT Jacob Damgaard
4)MULLER Torben
5)WINTHER Casper Juel

(57) Abstract :
A configurable rack for supporting components of an uninterruptible power supply includes a frame assembly having a front and a rear. At least one of the front and the rear is configured to receive electronic modules in stacked relation along a height of the frame assembly. The configurable rack further includes a busbar backplane disposed between the front and the rear. The busbar backplane extends vertically within the frame assembly and is configured to be electrically coupled to the at least one electronic module received within the front and/or the rear of the frame assembly.

No. of Pages : 33 No. of Claims : 24

(12) PATENT APPLICATION PUBLICATION
(19) INDIA
(22) Date of filing of Application :19/07/2013
(21) Application No.6510/DELNP/2013 A
(43) Publication Date : 19/12/2014

(54) Title of the invention : LAMP HOLDER WITH ELECTROMECHANICAL INTEGRATED THERMOSTAT

(51) International classification	:H01H37/04,H01H37/18,H01H37/38
(31) Priority Document No	:TO2011A000031
(32) Priority Date	:19/01/2011
(33) Name of priority country	:Italy
(86) International Application No	:PCT/US2012/021654
Filing Date	:18/01/2012
(87) International Publication No	:WO 2012/099922
(61) Patent of Addition to Application Number	:NA
Filing Date	:NA
(62) Divisional to Application Number	:NA
Filing Date	:NA

(71)**Name of Applicant :**
1)ILLINOIS TOOL WORKS INC.
Address of Applicant :3600 West Lake Avenue Glenview Illinois 60026 U.S.A.
(72)**Name of Inventor :**
1)BASSI Alberto

(57) Abstract :
Integrated thermostat/lamp holder unit for refrigerators comprising: a thermostat support (12) having substantially the form of a parallelepiped with two open adjacent sides; a bellows thermostatic element (22) able to expand and contract following a variation in volume of a fluid contained inside it; a plate (26) pivoting about an axis (A); a first spring element (28) which generates a torque on the pivoting plate (26) tending to press resiliently said pivoting plate against said thermostatic element (22); a lamp holder body (14) fixed to the thermostat support (12) so as to close said open adjacent sides of the thermostat support (12); a regulating pin (46) rotatable about a transverse axis (B); a sliding piece (50) movable in a longitudinal direction (C) and cooperating with said regulating pin (46) so that a rotation of the regulating pin (46) about said transverse axis (B) produces a displacement of the sliding piece (50) in said longitudinal direction (C); a second spring element (58) arranged between said sliding piece (50) and said pivoting plate (26) the second spring element (58) generating on the pivoting plate (26) a torque opposing the torque produced by said first spring element (26); and an electric circuit (70) integrated in said lamp holder body (14) and including a main switch (72) operated by said regulating pin (46) a thermostatic switch (74) operated by said pivoting plate (26) and two fixed contacts (88 90) for operating a lamp (l).

No. of Pages : 17 No. of Claims : 6

(12) PATENT APPLICATION PUBLICATION
(19) INDIA
(22) Date of filing of Application :22/07/2013
(21) Application No.6525/DELNP/2013 A
(43) Publication Date : 19/12/2014

(54) Title of the invention : APPARATUS FOR PROCESSING A GAS

(51) International classification :F28D9/00,B01D53/26
(31) Priority Document No :PD2011A000031
(32) Priority Date :07/02/2011
(33) Name of priority country :Italy
(86) International Application No :PCT/EP2012/051926
Filing Date :06/02/2012
(87) International Publication No :WO 2012/107380
(61) Patent of Addition to Application Number :NA
Filing Date :NA
(62) Divisional to Application Number :NA
Filing Date :NA

(71)**Name of Applicant :**
1)M.T.A. S.p.A.
Address of Applicant :via dellArtigianato 2 I 35026 Conselve (PD) Italy
(72)**Name of Inventor :**
1)BERNARDINELLO Stefano
2)BOTTAZZO Andrea

(57) Abstract :
An apparatus for drying a gas to be processed comprises a box like body inside which there are received a condensate separator and a first and a second heat exchanger which extend over substantially equal longitudinal portions and which are arranged perpendicularly relative to each other. The first exchanger has heat exchange plates having a thickness different from the thickness of the plates of the second exchanger.

No. of Pages : 18 No. of Claims : 10

(12) PATENT APPLICATION PUBLICATION
(19) INDIA
(22) Date of filing of Application :22/07/2013
(21) Application No.6527/DELNP/2013 A
(43) Publication Date : 19/12/2014

(54) Title of the invention : SAWING BEAD

(51) International classification :B23D61/18,B23D65/00,B28D1/08
(31) Priority Document No :11156981.0
(32) Priority Date :04/03/2011
(33) Name of priority country :EPO
(86) International Application No :PCT/EP2012/053642
Filing Date :02/03/2012
(87) International Publication No :WO 2012/119946
(61) Patent of Addition to Application Number :NA
Filing Date :NA
(62) Divisional to Application Number :NA
Filing Date :NA

(71)**Name of Applicant :**
1)NV BEKAERT SA
Address of Applicant :Bekaertstraat 2 B 8550 Zwevegem Belgium
(72)**Name of Inventor :**
1)VANEECKE Jan
2)GROENEN Roland
3)BAEKELANDT Tom

(57) Abstract :
A sawing bead for use in a sawing cord is described and claimed. Sawing cords are used for cutting hard and brittle materials. The sawing bead comprises a tubular metallic sleeve on which an abrasive layer is deposited. The abrasive layer comprises a metal matrix material in which abrasive particles are held. Special about the bead is that the metal matrix material shows a dentritic structure in a metallographic cross section which is a result of the way it has been produced namely by laser cladding. The abrasive layer adheres very well to the sleeve as a metallurgical bonding layer is present between the abrasive layer and the sleeve. Abrasive particles are present down to this bonding layer thereby improving the useful life of the bead as no brazing layer is present between abrasive layer and sleeve as in prior art beads. In the metal matrix material active metals are present that enhance the wetting and adhesion of the abrasive particles. Single bead cutting tests show at least as good a performance of the inventive beads when compared to existing beads.

No. of Pages : 41 No. of Claims : 18

(12) PATENT APPLICATION PUBLICATION
(19) INDIA
(22) Date of filing of Application :22/07/2013
(21) Application No.6528/DELNP/2013 A
(43) Publication Date : 19/12/2014

(54) Title of the invention : METHOD TO PRODUCE A SAWING BEAD

(51) International classification :B23D61/18,B23D65/00,B28D1/08
(31) Priority Document No :11156982.8
(32) Priority Date :04/03/2011
(33) Name of priority country :EPO
(86) International Application No :PCT/EP2012/053643
Filing Date :02/03/2012
(87) International Publication No :WO 2012/119947
(61) Patent of Addition to Application Number :NA
Filing Date :NA
(62) Divisional to Application Number :NA
Filing Date :NA

(71)**Name of Applicant :**
1)NV BEKAERT SA
Address of Applicant :Bekaertstraat 2 B 8550 Zwevegem Belgium
(72)**Name of Inventor :**
1)VANEECKE Jan
2)GROENEN Roland
3)BAEKELANDT Tom

(57) Abstract :
A method is described for producing a sawing bead for use in a sawing cord. Sawing cords are used for cutting hard and brittle materials. In the method laser cladding is used to form an abrasive layer on a small metallic tube (204) or sleeve. The abrasive layer (220) comprises a metal matrix material in which abrasive particles such as diamond cubic boron nitride or other hard cutting materials are embedded. The metal matrix material preferably comprises an active metal that improves wetting and adhesion of the abrasive particles. Although the abrasive particles are relative large with a particle size in excess of 100 μm they are evenly distributed throughout the abrasive layer. This is achieved by letting the tube (204) rotate relative to the laser cladding system possibly in combination with a relative axial movement so that the cladding track loops on itself thereby forming an abrasive layer (220). Additionally the method allows to shape the sawing bead for improved geometrical tolerances and centricity. Production times are less than ten seconds per bead and the method is easily automated.

No. of Pages : 41 No. of Claims : 15

(12) PATENT APPLICATION PUBLICATION
(19) INDIA
(22) Date of filing of Application :22/07/2013
(21) Application No.6529/DELNP/2013 A
(43) Publication Date : 19/12/2014

(54) Title of the invention : TOP CYCLE POWER GENERATION WITH HIGH RADIANT AND EMISSIVITY EXHAUST

(51) International classification :F01K23/06,F01K25/02,F01K27/00
(31) Priority Document No :61/426515
(32) Priority Date :23/12/2010
(33) Name of priority country :U.S.A.
(86) International Application No :PCT/US2011/067216
Filing Date :23/12/2011
(87) International Publication No :WO 2012/088516
(61) Patent of Addition to Application Number :NA
Filing Date :NA
(62) Divisional to Application Number :NA
Filing Date :NA

(71)**Name of Applicant :**
1)GURIN Michael
Address of Applicant :4132 Cove Lane Unit A Glenview IL 60025 U.S.A.
(72)**Name of Inventor :**
1)GURIN Michael

(57) Abstract :
The present invention generally relates to power generation methods and secondary processes requiring high radiant and emissivity homogeneous combustion to maximize production output. In one embodiment the present invention relates to a top cycle power generator with combustion exhaust modified to have radiant flux in excess of 500 kW per square meter and emissivity greater than 0.90 and supercritical CO2 power generating cycle to maximize energy efficiency.

No. of Pages : 82 No. of Claims : 84

(12) PATENT APPLICATION PUBLICATION
(19) INDIA
(22) Date of filing of Application :19/07/2013
(21) Application No.6512/DELNP/2013 A
(43) Publication Date : 19/12/2014

(54) Title of the invention : RECHARGEABLE BATTERY SYSTEMS AND RECHARGEABLE BATTERY SYSTEM OPERATIONAL METHODS

(51) International classification	:H02J7/00,H01M10/44,H01M10/05
(31) Priority Document No	:13/010724
(32) Priority Date	:20/01/2011
(33) Name of priority country	:U.S.A.
(86) International Application No	:PCT/US2012/021431
Filing Date	:16/01/2012
(87) International Publication No	:WO 2012/099820
(61) Patent of Addition to Application Number	:NA
Filing Date	:NA
(62) Divisional to Application Number	:NA
Filing Date	:NA

(71)**Name of Applicant :**
1)VALENCE TECHNOLOGY INC.
Address of Applicant :1889 East Maule Avenue Suite A Las Vegas NV 89119 U.S.A.
(72)**Name of Inventor :**
1)NYSEN Peter

(57) Abstract :
Rechargeable battery systems and rechargeable battery system operational methods are described. According to one aspect a rechargeable battery system includes a plurality of rechargeable battery cells coupled between a plurality of terminals and shunting circuitry configured to shunt charging electrical energy around respective ones of the rechargeable battery cells during charging of the rechargeable battery cells from substantially discharged states of charge of the rechargeable battery cells to substantially charged states of charge of the rechargeable battery cells.

No. of Pages : 50 No. of Claims : 23

(12) PATENT APPLICATION PUBLICATION
(19) INDIA
(22) Date of filing of Application :19/07/2013
(21) Application No.6513/DELNP/2013 A
(43) Publication Date : 19/12/2014

(54) Title of the invention : INKJET INK SET

(51) International classification :C09D11/10,C09D11/00,B41J2/01
(31) Priority Document No :NA
(32) Priority Date :NA
(33) Name of priority country :NA
(86) International Application No :PCT/US2011/023232
Filing Date :31/01/2011
(87) International Publication No :WO 2012/105949
(61) Patent of Addition to Application Number :NA
Filing Date :NA
(62) Divisional to Application Number :NA
Filing Date :NA

(71)**Name of Applicant :**
1)HEWLETT PACKARD DEVELOPMENT COMPANY L.P.
Address of Applicant :11445 Compaq Center Drive W. Houston Texas 77070 U.S.A.
(72)**Name of Inventor :**
1)CHEN Xiaohe
2)KIZHAKKEDATH Pradeep Kumar Koyadan
3)PARAZAK Dennis P.
4)PRASAD Keshava A.
5)STOEVA Savka Ilieva
6)TSAO Yi Hua
7)TSEENG Jennifer
8)MUBAREKYAN Ervin

(57) Abstract :
An inkjet ink set includes a black ink a yellow ink a cyan ink and a magenta ink. The magenta ink includes an ink vehicle including a polyurethane binder and a dispersed magenta pigment in the ink vehicle. The magenta pigment is chosen from Pigment Red 282.

No. of Pages : 35 No. of Claims : 15

(12) PATENT APPLICATION PUBLICATION
(19) INDIA
(22) Date of filing of Application :22/07/2013
(21) Application No.6516/DELNP/2013 A
(43) Publication Date : 19/12/2014

(54) Title of the invention : HYDROCRACKING CATALYSTS CONTAINING STABILIZED AGGREGATES OF SMALL CRYSTALLITES OF ZEOLITE Y AND ASSOCIATED HYDROCARBON CONVERSION PROCESSES

(51) International classification :B01J29/00,B01J29/16,C10G47/00
(31) Priority Document No :13/041597
(32) Priority Date :07/03/2011
(33) Name of priority country :U.S.A.
(86) International Application No :PCT/US2012/027960
Filing Date :07/03/2012
(87) International Publication No :WO 2012/122208
(61) Patent of Addition to Application Number :NA
Filing Date :NA
(62) Divisional to Application Number :NA
Filing Date :NA

(71)**Name of Applicant :**
1)EXXONMOBIL RESEARCH AND ENGINEERING COMPANY
Address of Applicant :1545 Route 22 East P.O. Box 900 Annandale NJ 08801 0900 U.S.A.
(72)**Name of Inventor :**
1)OLIVERI Christopher G.
2)LAI Wenyih Frank
3)DANDEKAR Ajit B.
4)WEIGEL Scott J.
5)KAY Robert Ellis
6)WU Jianxin Jason

(57) Abstract :
This invention relates to hydrocracking catalysts utilizing stabilized aggregates of small primary crystallites of zeolite Y that are clustered into larger secondary particles. At least 80% of the secondary particles may comprise at least 5 primary crystal lites. The size of the primary crystallites may be at most about 0.5 micron or at most about 0.3 micron and the size of the secondary particles may be at least about 0.8 micron or at least about 1.0 µim. The silica to alumina ratio of the resulting stabilized aggregated Y zeolite may be 4: 1 or more. This invention also relates to the use of such catalysts in hydrocracking processes for the conversion of heavy oils into lighter fuel products. The invention is particularly suited for the selective production of diesel range products from gas oil range feedstock materials under hydrocracking conditions.

No. of Pages : 48 No. of Claims : 44

(12) PATENT APPLICATION PUBLICATION
(19) INDIA
(22) Date of filing of Application :22/07/2013
(21) Application No.6517/DELNP/2013 A
(43) Publication Date : 19/12/2014

(54) Title of the invention : ELECTRICAL POWER MANAGEMENT SYSTEM AND ELECTRICAL POWER MANAGEMENT METHOD

(51) International classification :H02J3/46,H02J7/35,H02J13/00
(31) Priority Document No :2011018322
(32) Priority Date :31/01/2011
(33) Name of priority country :Japan
(86) International Application No :PCT/JP2011/076291
Filing Date :15/11/2011
(87) International Publication No :WO 2012/105105
(61) Patent of Addition to Application Number :NA
Filing Date :NA
(62) Divisional to Application Number :NA
Filing Date :NA

(71)**Name of Applicant :**
1)NEC CORPORATION
Address of Applicant :7 1 Shiba 5 chome Minato ku Tokyo 1088001 Japan
(72)**Name of Inventor :**
1)KUDO Koji
2)SAKUMA Hisato
3)YANO Hitoshi

(57) Abstract :
The HEMS of each consumer transmits to a server device the surplus electrical power amount generated by a PV system during a prescribed time slot or on a prescribed day and/or a electrical power amount forecast to be required by a controllable load during a prescribed time slot or a prescribed day. On the basis of the communicated surplus electrical power amount and the electrical power amount required by a controllable load the server device combines a first consumer and a second consumer so that the electrical power amount required by a controllable load becomes an electrical power amount that is no less than the surplus electrical power amount. Then by controlling the HEMS provided to the second consumer the surplus electrical power generated by the first consumer is consumed by controllable loads.

No. of Pages : 25 No. of Claims : 10

(12) PATENT APPLICATION PUBLICATION
(19) INDIA
(22) Date of filing of Application :22/07/2013
(21) Application No.6518/DELNP/2013 A
(43) Publication Date : 19/12/2014

(54) Title of the invention : OIL FIELD TREATMENT FLUIDS

(51) International classification :C09K8/12,C09K8/68,B01F17/00
(31) Priority Document No :13/019375
(32) Priority Date :02/02/2011
(33) Name of priority country :U.S.A.
(86) International Application No :PCT/US2012/023323
Filing Date :31/01/2012
(87) International Publication No :WO 2012/106336
(61) Patent of Addition to Application Number :NA
Filing Date :NA
(62) Divisional to Application Number :NA
Filing Date :NA

(71)**Name of Applicant :**
1)BAKER HUGHES INCORPORATED
Address of Applicant :2929 Allen Parkway Suite 2100 Houston TX 77019 2118 U.S.A.
(72)**Name of Inventor :**
1)GUPTA Satyanarayana D.V.
2)CHETTY Madhukar
3)CARMAN Paul Scott

(57) Abstract :
A method of servicing a well is disclosed. The method comprises mixing ingredients to form a well servicing fluid. The ingredients comprise (i) at least one surfactant chosen from alcohol ethoxylates C4 to C12 primary alcohols and ethoxylated propoxylated alcohols (ii) a zwitterionic polymer prepared by inverse emulsion polymerization of at least one monomer Ab comprising a betaine group and optionally one or more nonionic monomers B12 and (iii) a saline based aqueous solution. The well servicing fluid is introduced into a hydrocarbon well.

No. of Pages : 75 No. of Claims : 32

(12) PATENT APPLICATION PUBLICATION
(19) INDIA
(22) Date of filing of Application :24/05/2013
(21) Application No.1564/DEL/2013 A
(43) Publication Date : 19/12/2014

(54) Title of the invention : PROCESS FOR PREPARATION OF NANOPOROUS GRAPHENE & GRAPHENE QUANTUM DOTS

(51) International classification	:B82Y, H01L, C01B
(31) Priority Document No	:NA
(32) Priority Date	:NA
(33) Name of priority country	:NA
(86) International Application No	:NA
Filing Date	:NA
(87) International Publication No	: NA
(61) Patent of Addition to Application Number	:NA
Filing Date	:NA
(62) Divisional to Application Number	:NA
Filing Date	:NA

(71)**Name of Applicant :**
1)COUNCIL OF SCIENTIFIC & INDUSTRIAL RESEARCH
Address of Applicant :ANUSANDHAN BHAWAN, RAFI MARG, NEW DELHI-110001, INDIA
(72)**Name of Inventor :**
1)SREEKUMAR KURUNGOT
2)THANGAVELU PLANISELVAM

(57) Abstract :
The present invention discloses a simple and easily scalable process for preparation of two potentially value added carbonaceous materials from graphene. The invention further discloses simultaneous preparation of graphene quantum dots (GQDs,) and porous graphene (pGr) from graphene. The invention further relates to nitrogen doped porous graphene having excellent activity towards electrochemical oxygen reduction reaction (ORR).

No. of Pages : 29 No. of Claims : 5

(12) PATENT APPLICATION PUBLICATION
(19) INDIA
(22) Date of filing of Application :22/07/2013
(21) Application No.6537/DELNP/2013 A
(43) Publication Date : 19/12/2014

(54) Title of the invention : POD AND PACKAGE FOR PREPARING A BEVERAGE BY CENTRIFUGATION

(51) International classification :B65D85/804
(31) Priority Document No :11152383.3
(32) Priority Date :27/01/2011
(33) Name of priority country :EPO
(86) International Application No :PCT/EP2012/050270
Filing Date :10/01/2012
(87) International Publication No :WO 2012/100975
(61) Patent of Addition to Application Number :NA
Filing Date :NA
(62) Divisional to Application Number :NA
Filing Date :NA

(71)**Name of Applicant :**
1)NESTEC S.A.
Address of Applicant :Av. Nestl 55 CH 1800 Vevey Switzerland
(72)**Name of Inventor :**
1)GERBAULET Arnaud
2)ABEGGLEN Daniel
3)PERENTES Alexandre
4)TINEMBART Jean Fran§ois

(57) Abstract :
Pod for the preparation of a beverage in a centrifugal brewing device by feeding liquid through said pod and rotating the pod along a rotating axis I in the device to produce centrifugal forces on the liquid traversing the pod thereby forcing a beverage out of the pod by such centrifugal forces wherein the pod comprises containment walls containing beverage ingredients; said containment walls being essentially made of porous filtering material and comprising a top wall from which a central funnel (10) comprising liquid inlet openings extends inwardly in the pod

No. of Pages : 21 No. of Claims : 18

(12) PATENT APPLICATION PUBLICATION
(19) INDIA
(22) Date of filing of Application :22/07/2013
(21) Application No.6538/DELNP/2013 A
(43) Publication Date : 19/12/2014

(54) Title of the invention : CAPSULE FOR THE PREPARATION OF A BEVERAGE BY CENTRIFUGATION AND METHOD OF PREPARATION USING SUCH CAPSULE

(51) International classification :B65D85/804
(31) Priority Document No :11152382.5
(32) Priority Date :27/01/2011
(33) Name of priority country :EPO
(86) International Application No :PCT/EP2012/050272
Filing Date :10/01/2012
(87) International Publication No :WO 2012/100977
(61) Patent of Addition to Application Number :NA
Filing Date :NA
(62) Divisional to Application Number :NA
Filing Date :NA

(71)**Name of Applicant :**
1)NESTEC S.A.
Address of Applicant :Av. Nestl 55 CH 1800 Vevey Switzerland
(72)**Name of Inventor :**
1)GERBAULET Arnaud
2)ABEGGLEN Daniel
3)PERENTES Alexandre
4)TINEMBART Jean Fran§ois

(57) Abstract :
Capsule (1) for the preparation of a beverage in a centrifugal brewing device by feeding liquid in the capsule and rotating the capsule (1) along a rotational axis I in the device to produce centrifugal forces on the liquid and forcing a beverage out of the capsule wherein the capsule (1) comprises containment walls containing beverage ingredients; said containment walls comprising a bottom wall (2) a widening sidewall (3) and a top wall (4) said top wall (4) comprising at least one liquid impervious area (7) and at least one liquid pervious and beverage filtering area (5); wherein the liquid pervious and beverage filtering area (5) is peripherally positioned on the top wall (4) relative to the liquid impervious area (7) and wherein the liquid pervious and beverage filtering area is made of a porous flexible material which is extensible at least in axial direction and has a tensile elongation of at least 250 preferably at least 300% (DIN EN 29073 -3).

No. of Pages : 18 No. of Claims : 16

(12) PATENT APPLICATION PUBLICATION
(19) INDIA
(22) Date of filing of Application :22/07/2013
(21) Application No.6539/DELNP/2013 A
(43) Publication Date : 19/12/2014

(54) Title of the invention : BEVERAGE PRODUCTION SYSTEM AND CAPSULE WITH FORCE RING

(51) International classification :A47J31/22,B65D85/804
(31) Priority Document No :NA
(32) Priority Date :NA
(33) Name of priority country :NA
(86) International Application No :PCT/EP2011/051241
Filing Date :28/01/2011
(87) International Publication No :WO 2012/100836
(61) Patent of Addition to Application Number :NA
Filing Date :NA
(62) Divisional to Application Number :NA
Filing Date :NA

(71)**Name of Applicant :**
1)NESTEC S.A.
Address of Applicant :Av. Nestl 55 CH 1800 Vevey Switzerland
(72)**Name of Inventor :**
1)ABEGGLEN Daniel
2)PERENTES Alexandre
3)MAGRI Carlo
4)GERBAULET Arnaud

(57) Abstract :
The present invention relates to a capsule (1) designed for insertion in a beverage production device (23) for preparing a beverage from a substance contained in the capsule by introducing liquid in the capsule and passing liquid through the substance using centrifugal forces the capsule comprising: a body (2) comprising a bottom end and an open end; an upper wall (3) for covering the body at its open end; an enclosure (14) between the body and upper wall containing a predetermined amount of beverage substance; the capsule comprising a flange like rim (4) extending outwardly from the body (2) wherein the flange like rim comprises an annular force ring (8) designed for being engaged by an enclosing member (49) of a dedicated beverage production device (23) wherein the force ring comprises at least one curved folded part (16) forming of at least one ply of material.

No. of Pages : 44 No. of Claims : 19

(12) PATENT APPLICATION PUBLICATION
(19) INDIA
(22) Date of filing of Application :22/07/2013
(21) Application No.6530/DELNP/2013 A
(43) Publication Date : 19/12/2014

(54) Title of the invention : METHODS OF REMOVING RUST FROM A FERROUS METAL CONTAINING SURFACE

(51) International classification :C23G1/08,C11D11/00
(31) Priority Document No :13/011151
(32) Priority Date :21/01/2011
(33) Name of priority country :U.S.A.
(86) International Application No :PCT/US2012/022004
Filing Date :20/01/2012
(87) International Publication No :WO 2012/100146
(61) Patent of Addition to Application Number :NA
Filing Date :NA
(62) Divisional to Application Number :NA
Filing Date :NA

(71)**Name of Applicant :**
1)PPG INDUSTRIES OHIO INC.
Address of Applicant :3800 West 143rd Street Cleveland Ohio 44111 U.S.A.
(72)**Name of Inventor :**
1)PAWLIK Michael J.
2)LINGENFELTER Thor G.
3)SILVERNAIL Nathan J.

(57) Abstract :
Disclosed are methods for removing rust from a ferrous metal containing surface. These methods include contacting the surface with a composition that includes a carboxylic acid a synthetic hectorite clay and water.

No. of Pages : 18 No. of Claims : 21

(12) PATENT APPLICATION PUBLICATION
(19) INDIA
(22) Date of filing of Application :22/07/2013
(21) Application No.6531/DELNP/2013 A
(43) Publication Date : 19/12/2014

(54) Title of the invention : METHODS AND APPARATUS FOR EFFICIENT COMMUNICATION BETWEEN CACHES IN HIERARCHICAL CACHING DESIGN

(51) International classification :G06F13/14,G06F13/38,G06F12/08
(31) Priority Document No :NA
(32) Priority Date :NA
(33) Name of priority country :NA
(86) International Application No :PCT/US2011/067217
Filing Date :23/12/2011
(87) International Publication No :WO 2013/095640
(61) Patent of Addition to Application Number :NA
Filing Date :NA
(62) Divisional to Application Number :NA
Filing Date :NA

(71)**Name of Applicant :**
1)INTEL CORPORATION
Address of Applicant :2200 Mission College Boulevard MS: RNB 4 150 Santa Clara California 95052 U.S.A.
(72)**Name of Inventor :**
1)SHALEV Ron
2)GILAD Yiftach
3)RAIKIN Shlomo
4)YANOVER Igor
5)SHWARTSMAN Stanislav
6)SADE Raanan

(57) Abstract :
In accordance with embodiments disclosed herein there are provided methods systems mechanisms techniques and apparatuses for implementing efficient communication between caches in hierarchical caching design. For example in one embodiment such means may include an integrated circuit having a data bus; a lower level cache communicably interfaced with the data bus; a higher level cache communicably interfaced with the data bus; one or more data buffers and one or more dataless buffers. The data buffers in such an embodiment being communicably interfaced with the data bus and each of the one or more data buffers having a buffer memory to buffer a full cache line one or more control bits to indicate state of the respective data buffer and an address associated with the full cache line. The dataless buffers in such an embodiment being incapable of storing a full cache line and having one or more control bits to indicate state of the respective dataless buffer and an address for an inter cache transfer line associated with the respective dataless buffer. In such an embodiment inter cache transfer logic is to request the inter cache transfer line from the higher level cache via the data bus and is to further write the inter cache transfer line into the lower level cache from the data bus.

No. of Pages : 46 No. of Claims : 26

(12) PATENT APPLICATION PUBLICATION
(19) INDIA
(22) Date of filing of Application :22/07/2013
(21) Application No.6532/DELNP/2013 A
(43) Publication Date : 19/12/2014

(54) Title of the invention : WEAR MONITORING OF A GEARBOX IN A POWER STATION

(51) International classification :G01M13/02
(31) Priority Document No :11157943.9
(32) Priority Date :11/03/2011
(33) Name of priority country :EPO
(86) International Application No :PCT/EP2012/054095
Filing Date :09/03/2012
(87) International Publication No :WO 2012/123351
(61) Patent of Addition to Application Number :NA
Filing Date :NA
(62) Divisional to Application Number :NA
Filing Date :NA

(71)**Name of Applicant :**
1)HEXAGON TECHNOLOGY CENTER GMBH
Address of Applicant :Heinrich Wild Strasse CH 9435 Heerbrugg Switzerland
(72)**Name of Inventor :**
1)PETTERSSON Bo

(57) Abstract :
The invention relates to a method of monitoring a wear of a gearbox in a power station such as a windmill waterwheel or tidal power station the gearbox comprising at least two shafts cogwheels and bearings as components of the gearbox. The method comprises sensing an angular position at the shafts by a rotational shaft encoder and monitoring the wear of the transmission unit according to differences of the sensed angular positions and generating a condition signal representative of the wear of the gearbox according to the monitored differences. The monitoring comprises an additional sensing of at least one additional degree of freedom in particular an axial and/or eccentric displacement of at least one of the shafts caused by wear of at least one of the components of the gearbox and generating the condition signal according to the displacement and differences in the at least two degrees of freedom.

No. of Pages : 39 No. of Claims : 15

(12) PATENT APPLICATION PUBLICATION
(19) INDIA
(22) Date of filing of Application :22/07/2013
(21) Application No.6535/DELNP/2013 A
(43) Publication Date : 19/12/2014

(54) Title of the invention : PATHOLOGY SLIDE SCANNER

(51) International classification :G02B21/26,G02B21/36
(31) Priority Document No :61/427153
(32) Priority Date :24/12/2010
(33) Name of priority country :U.S.A.
(86) International Application No :PCT/CA2011/001401
Filing Date :23/12/2011
(87) International Publication No :WO 2012/083438
(61) Patent of Addition to Application Number :NA
Filing Date :NA
(62) Divisional to Application Number :NA
Filing Date :NA

(71)**Name of Applicant :**
1)HURON TECHNOLOGIES INTERNATIONAL INC.
Address of Applicant :550 Parkside Drive Unit B6 Waterloo Ontario N2L 5V4 Canada
(72)**Name of Inventor :**
1)DIXON Arthur Edward

(57) Abstract :
An instrument and method for scanning at least a portion of a large specimen preferably causes the specimen to move relative to a two dimensional detector array at a constant speed. The detector array takes one image of the specimen for each line that the detector moves. A controller controls a shutter of the detector array to open to take images and to pass the images to a processor which is preferably a computer. The instrument takes one partial image of each part of the specimen that is being scanned and then combines those images with other images to produce a contiguous image.

No. of Pages : 48 No. of Claims : 58

(12) PATENT APPLICATION PUBLICATION
(19) INDIA
(22) Date of filing of Application :17/05/2013
(21) Application No.1487/DEL/2013 A
(43) Publication Date : 19/12/2014

(54) Title of the invention : RUBBER RESIN COMPOSITES AND PROCESS THEREOF

(51) International classification	:B29C, C08K
(31) Priority Document No	:NA
(32) Priority Date	:NA
(33) Name of priority country	:NA
(86) International Application No	:NA
Filing Date	:NA
(87) International Publication No	: NA
(61) Patent of Addition to Application Number	:NA
Filing Date	:NA
(62) Divisional to Application Number	:NA
Filing Date	:NA

(71)**Name of Applicant :**
1)DIRECTOR GENERAL, DEFENCE RESEARCH & DEVELOPMENT ORGANIZATION (DRDO)
Address of Applicant :Ministry of Defence, Government of India, Room No. 348, B-wing, DRDO Bhawan, Rajaji Marg, New Delhi 110105, India. Delhi India
(72)**Name of Inventor :**
1)SRINIVASULU REDDY KRISHNA MOHAN
2)SRIPERAMBUDUR RAJESH KUMAR
3)JANAKIRAMAN DHANASEKARAN
4)ASSEREF PALAMADATHIL MANNUKKUTHU

(57) Abstract :
The present disclosure relates to a process for producing rubber resin composites with enhanced mechanical and barrier properties. The present disclosure also relates to a process for producing rubber resin composites in which reinforcement is carried out by using co-curing process from resin pre-preg.

No. of Pages : 71 No. of Claims : 18

(12) PATENT APPLICATION PUBLICATION
(19) INDIA
(22) Date of filing of Application :22/05/2013
(21) Application No.1540/DEL/2013 A
(43) Publication Date : 19/12/2014

(54) Title of the invention : A NOVEL SYSTEM FOR CONTROLLED EGR FLOW TO IMPROVE ENGINE TRANSIENT RESPOSNE

(51) International classification	:F02M, F02D
(31) Priority Document No	:NA
(32) Priority Date	:NA
(33) Name of priority country	:NA
(86) International Application No	:NA
Filing Date	:NA
(87) International Publication No	: NA
(61) Patent of Addition to Application Number	:NA
Filing Date	:NA
(62) Divisional to Application Number	:NA
Filing Date	:NA

(71)**Name of Applicant :**
1)ESCORTS LIMITED, AGRI MACHINERY GROUP
Address of Applicant :18/4, MATHURA ROAD, FARIDABAD-121007 (INDIA), Haryana India
(72)**Name of Inventor :**
1)VIKAS DHIMAN
2)SHAKTI KUMAR SINGH
3)CHETAN SHARMA
4)KRATIKA GUPTA

(57) Abstract :
This invention relates to a novel system for controlled EGR flow to improve engine transient response comprising of clutch connected to switch, EGR valve and timer relay.

No. of Pages : 8 No. of Claims : 6

(12) PATENT APPLICATION PUBLICATION
(19) INDIA
(22) Date of filing of Application :22/07/2013
(21) Application No.6541/DELNP/2013 A
(43) Publication Date : 19/12/2014

(54) Title of the invention : METHODS AND COMPOSITIONS FOR TREATING REDUCING OR PREVENTING DETERIORATION OF THE VISUAL SYSTEM OF ANIMALS

(51) International classification :A61K35/44
(31) Priority Document No :61/461913
(32) Priority Date :25/01/2011
(33) Name of priority country :U.S.A.
(86) International Application No :PCT/US2012/022297
Filing Date :24/01/2012
(87) International Publication No :WO 2012/103049
(61) Patent of Addition to Application Number :NA
Filing Date :NA
(62) Divisional to Application Number :NA
Filing Date :NA

(71)**Name of Applicant :**
1)NESTEC S. A.
Address of Applicant :Avenue Nestle 55 CH 1800 Vevey Switzerland
(72)**Name of Inventor :**
1)PAN Yuanlong

(57) Abstract :
Methods and compositions for treating reducing or preventing deterioration of at least one component of the visual system of an animal are disclosed. The methods comprise administering to the animal a composition comprising UFA and NORC in an amount effective to treat reduce or prevent deterioration of at least one component of the visual system. Methods extending the prime years of an animal s life improving the quality of life and promoting health and wellness of an animal using compositions comprising UFA and NORC are also disclosed.

No. of Pages : 40 No. of Claims : 117

(12) PATENT APPLICATION PUBLICATION
(19) INDIA
(22) Date of filing of Application :22/07/2013
(21) Application No.6542/DELNP/2013 A
(43) Publication Date : 19/12/2014

(54) Title of the invention : MODULATION OF GROWTH OF BIFIDOBACTERIA USING A COMBINATION OF OLIGOSACCHARIDES FOUND IN HUMAN MILK

(51) International classification :A23L1/30,A23L1/308,A23L1/09
(31) Priority Document No :61/441451
(32) Priority Date :10/02/2011
(33) Name of priority country :U.S.A.
(86) International Application No :PCT/IB2012/050511
Filing Date :03/02/2012
(87) International Publication No :WO 2012/107865
(61) Patent of Addition to Application Number :NA
Filing Date :NA
(62) Divisional to Application Number :NA
Filing Date :NA

(71)**Name of Applicant :**
1)NESTEC S.A.
Address of Applicant :Avenue Nestl 55 CH 1800 Vevey Switzerland
(72)**Name of Inventor :**
1)FRANTZ David Curtis

(57) Abstract :
BifidobacteriaA prebiotic formulation for oral administration to a human comprising 2 fucosyllactose 3 sialyllactose and 6 sialyllactose and a method for modulating or stimulating the growth of in the gut. The formulation may be an infant formula.

No. of Pages : 18 No. of Claims : 11

(12) PATENT APPLICATION PUBLICATION
(19) INDIA
(22) Date of filing of Application :22/07/2013
(21) Application No.6543/DELNP/2013 A
(43) Publication Date : 19/12/2014

(54) Title of the invention : FOOD ANALOGS AND METHODS FOR MAKING FOOD ANALOGS

(51) International classification :A23B4/00
(31) Priority Document No :61/461922
(32) Priority Date :25/01/2011
(33) Name of priority country :U.S.A.
(86) International Application No :PCT/US2012/022306
Filing Date :24/01/2012
(87) International Publication No :WO 2012/103056
(61) Patent of Addition to Application Number :NA
Filing Date :NA
(62) Divisional to Application Number :NA
Filing Date :NA

(71)**Name of Applicant :**
1)NESTEC S.A.
Address of Applicant :Avenue Nestle 55 CH 1800 Vevey Switzerland
(72)**Name of Inventor :**
1)PIBAROT Patrick
2)GUFFEY Wendell Ray

(57) Abstract :
The invention provides food analogs and methods of making the food analogs. In general the methods comprise comminuting one or more meats to produce a meat slurry admixing one or more flours to produce a powder blend admixing the meat slurry and the powder blend to produce a dough and extruding the dough at a shear mechanical energy ranging from about 50 kJ/kg to about 500 kJ/kg and at a temperature ranging from about 60°C to about 120°C to produce a food analog. Colorant can be added before during or after the admixing or extrusion processes to provide a more natural appearance to the food analog. The food analog can be a meat analog having the appearance of a meat or a non meat food analog such as a fruit or vegetable.

No. of Pages : 28 No. of Claims : 54

(12) PATENT APPLICATION PUBLICATION
(19) INDIA
(22) Date of filing of Application :22/07/2013
(21) Application No.6544/DELNP/2013 A
(43) Publication Date : 19/12/2014

(54) Title of the invention : RECHARGEABLE BATTERY SYSTEMS AND RECHARGEABLE BATTERY SYSTEM OPERATIONAL METHODS

(51) International classification	:H02J7/00,H01M10/44,H01M10/05
(31) Priority Document No	:13/010742
(32) Priority Date	:20/01/2011
(33) Name of priority country	:U.S.A.
(86) International Application No	:PCT/US2012/021440
Filing Date	:16/01/2012
(87) International Publication No	:WO 2012/099823
(61) Patent of Addition to Application Number	:NA
Filing Date	:NA
(62) Divisional to Application Number	:NA
Filing Date	:NA

(71)**Name of Applicant :**
1)VALENCE TECHNOLOGY INC.
Address of Applicant :1889 East Maule Ave.. Suite A. Las Vegas. Nevada 89119 United States of America
(72)**Name of Inventor :**
1)NYSEN Peter

(57) Abstract :
Rechargeable battery systems and rechargeable battery system operational methods are described. According to one aspect a rechargeable battery system includes a plurality of rechargeable battery modules coupled between a plurality of terminals wherein the rechargeable battery modules individually comprise a plurality of rechargeable battery cells and charge balancing circuitry configured to implement for individual ones of the rechargeable battery modules first charge balancing operations with respect to the rechargeable battery cells of individual ones of the rechargeable battery modules and to implement second charge balancing operations with respect to the rechargeable battery modules.

No. of Pages : 54 No. of Claims : 30

(12) PATENT APPLICATION PUBLICATION
(19) INDIA
(22) Date of filing of Application :07/03/2013
(21) Application No.2088/DELNP/2013 A
(43) Publication Date : 19/12/2014

(54) Title of the invention : UNIQUE TERMINAL COUNT ESTIMATION DEVICE AND UNIQUE TERMINAL COUNT ESTIMATION METHOD

(51) International classification :G06Q10/00,H04M11/00
(31) Priority Document No :2011018865
(32) Priority Date :31/01/2011
(33) Name of priority country :Japan
(86) International Application No :PCT/JP2012/051456
Filing Date :24/01/2012
(87) International Publication No :WO 2012/105378
(61) Patent of Addition to Application Number :NA
Filing Date :NA
(62) Divisional to Application Number :NA
Filing Date :NA

(71)**Name of Applicant :**
1)NTT DOCOMO INC.
Address of Applicant :11 1 Nagatacho 2 chome Chiyoda ku Tokyo 1006150 Japan
(72)**Name of Inventor :**
1)TERADA Masayuki
2)NAGATA Tomohiro
3)AOYAGI Sadanori
4)OKAJIMA Ichiro

(57) Abstract :
A unique-terminal-count estimation device (10) i s provided with an extraction unit (12) and a uniqueterminal- count estimation unit (15). O n the basis o f loca □0 tion data each containing identifying information that identifies a terminal, location information concerning the location o f said terminal, and acquismon-time information indicating the time at which the location information was acquired, said acquisnion times all falling within an obser vation period or an extended period that consists o f the ob servation period extended a prescribed amount, the extrac tion unit extracts either: terminals estimated t o have been in an observation area for at least part o f the observation period; or one location datum generated b y each such ter minal during the observation period or the extended peri od. O n the basis o f the number 0 1 location data or termin als extracted, the unique-terminal-count estimation unit es timates the number o f unique terminals that were in the observation area during the observation period.

No. of Pages : 138 No. of Claims : 26

(12) PATENT APPLICATION PUBLICATION
(19) INDIA
(22) Date of filing of Application :22/07/2013
(21) Application No.6547/DELNP/2013 A
(43) Publication Date : 19/12/2014

(54) Title of the invention : A VALVE SYSTEM WITH A SEALING MEMBER

(51) International classification :F16K3/02,F16K3/18,F16K43/00
(31) Priority Document No :PA 2011 00090
(32) Priority Date :11/02/2011
(33) Name of priority country :Denmark
(86) International Application No :PCT/EP2012/052174
Filing Date :09/02/2012
(87) International Publication No:WO 2012/107511
(61) Patent of Addition to Application Number :NA
Filing Date :NA
(62) Divisional to Application Number :NA
Filing Date :NA

(71)**Name of Applicant :**
1)Kongsberg Esco Multipurpose Valves AS
Address of Applicant :Gamle Gormsrudvei 40 NO 3601 Kongsberg Norway
(72)**Name of Inventor :**
1)SYVERSEN Per Risvik

(57) Abstract :
A valve system (1) and a fluid flow system in particular for an offshore installation with a valve system (1) are disclosed. The valve system (1) comprises a valve housing (2) defining a fluid inlet (3) and a fluid outlet (6); at least one valve element (7) arranged in an interior part of the valve housing (2) the valve element (s) (7) being movable relative to the valve housing (2) the position of the valve element (s) (7) relative to the valve housing (2) determining a flow rate of fluid medium through the valve system (1) from the fluid inlet (3) towards the fluid outlet (6); a moving mechanism (4) arranged to cause movements of the valve element (s) (7); and a sealing member (5) arranged in an interior part of the valve housing (2) the sealing member (5) being capable of separating the interior of the valve housing (2) into a first part comprising the fluid inlet (3) and the fluid outlet (6) and a second part. The sealing member (5) is mounted on the moving mechanism (4) the sealing member (5) thereby being movable along with the valve element (s) (7).

No. of Pages : 36 No. of Claims : 17

(12) PATENT APPLICATION PUBLICATION
(19) INDIA
(22) Date of filing of Application :22/07/2013
(21) Application No.6548/DELNP/2013 A
(43) Publication Date : 19/12/2014

(54) Title of the invention : COUPLER ALARM AND INSTRUCTIONAL GUIDE FOR AN EXCAVATOR

(51) International classification :E02F3/36,E02F9/24,E02F9/26
(31) Priority Document No :1021812.1
(32) Priority Date :21/12/2010
(33) Name of priority country :U.K.
(86) International Application No :PCT/GB2011/001738
Filing Date :19/12/2011
(87) International Publication No :WO 2012/085500
(61) Patent of Addition to Application Number :NA
Filing Date :NA
(62) Divisional to Application Number :NA
Filing Date :NA

(71)**Name of Applicant :**
1)MILLER INTERNATIONAL LTD.
Address of Applicant :International Commercial Centre Casemates Square PO Box 622 Gibraltar U.K.
(72)**Name of Inventor :**
1)MILLER Gary
2)REAY Howard

(57) Abstract :
An excavator (10) has a quick coupler (24) coupled to the distal end (22) of its excavator arm (12). The quick coupler (24) can be operated from the cab (14) of the excavator (10) and is connected to a warning control system (48) or an instructional device (102). The warning control system (48) is connected to a coupler control circuit (46) which controls the coupler (24) and the system or circuit acquires information on the coupler s status. A control system activation warning circuit is then arranged to be responsible for issuing warning signals (53 54) to personnel located external of the cab when the coupler control circuit (46) is activated into an accessory coupling procedure mode or an accessory decoupling procedure mode. To do this the warning circuit (48) is coupled to an audio and/or visual alarm (50 52) for directing the warnings (53 54) to the personnel including bystanders. The instructional device however instructs the operator as to how to use the coupler.

No. of Pages : 53 No. of Claims : 63

(12) PATENT APPLICATION PUBLICATION
(19) INDIA
(22) Date of filing of Application :27/05/2013
(21) Application No.1588/DEL/2013 A
(43) Publication Date : 19/12/2014

(54) Title of the invention : BIG DATA ANALYSIS IN THE CLOUD

(51) International classification :G06F
(31) Priority Document No :NA
(32) Priority Date :NA
(33) Name of priority country :NA
(86) International Application No :NA
Filing Date :NA
(87) International Publication No : NA
(61) Patent of Addition to Application Number :NA
Filing Date :NA
(62) Divisional to Application Number :NA
Filing Date :NA

(71)**Name of Applicant :**
1)UNISYS CORPORATION
Address of Applicant :C/O PATENT & TECHNOLOGY LAW GROUP MS/2NW, 801 LAKEVIEW DRIVE, SUITE 100, BLUE BELL, PA 19422, USA U.S.A.
(72)**Name of Inventor :**
1)MILIND HALAGERI

(57) Abstract :
Systems and methods are disclosed herein to a cloud system comprising: a data classification module: at least one master node configured to divide up a classification query into a plurality of sub-problems based on input data, distribute the plurality of sub-problems, receive processed data from the plurality of data nodes, and to combine the received processed data into an answer to the query that determines a class; and at least one worker node configured to process the received sub-problem based on an activation function of the first worker node, and output an output based on the received sub-problem and the activation function.

No. of Pages : 27 No. of Claims : 14

(12) PATENT APPLICATION PUBLICATION
(19) INDIA
(22) Date of filing of Application :31/05/2013
(21) Application No.1644/DEL/2013 A
(43) Publication Date : 19/12/2014

(54) Title of the invention : MOTOR STATOR AUTOMATICALLY ASSEMBLING METHOD

(51) International classification :H02K
(31) Priority Document No :NA
(32) Priority Date :NA
(33) Name of priority country :NA
(86) International Application No :NA
Filing Date :NA
(87) International Publication No : NA
(61) Patent of Addition to Application Number :NA
Filing Date :NA
(62) Divisional to Application Number :NA
Filing Date :NA

(71)**Name of Applicant :**
1)HERNG SHAN ELECTRONICS CO., LTD.
Address of Applicant :NO. 115, CUEIHUA RD., GUSHAN DISTRICT KAOHSIUNG, TAIWAN;
(72)**Name of Inventor :**
1)HUANG, JUNG-PEI.

(57) Abstract :
A motor stator automatically assembling system includes a feeding unit, a wire-winding unit, a first conveyer unit, a second conveyer unit, a first assembly unit and a second assembly unit. A motor stator automatically assembling method includes: the feeding unit is operated to feed a plurality of insulation members; the insulation members are arranged on the first conveyer unit to convey to the wire-winding unit; the wire-winding unit is operated to wind, wires on the insulation members to form a plurality of wire-wound insulation members; the wire-wound insulation members are arranged on the second conveyer unit to convey to the first assembly unit; the first assembly unit is operated to insert pole teeth into the wire-wound insulation members to form a plurality of compact pole tooth sets; the second assembly unit is operated to combine the compact pole tooth sets with a stator ring frame to form an assembled motor stator.

No. of Pages : 30 No. of Claims : 13

(12) PATENT APPLICATION PUBLICATION
(19) INDIA
(22) Date of filing of Application :31/05/2013
(21) Application No.1645/DEL/2013 A
(43) Publication Date : 19/12/2014

(54) Title of the invention : MOTOR STATOR AUTOMATICALLY ASSEMBLING SYSTEM

(51) International classification :H02K
(31) Priority Document No :NA
(32) Priority Date :NA
(33) Name of priority country :NA
(86) International Application No :NA
Filing Date :NA
(87) International Publication No : NA
(61) Patent of Addition to Application Number :NA
Filing Date :NA
(62) Divisional to Application Number :NA
Filing Date :NA

(71)**Name of Applicant :**
1)HERNG SHAN ELECTRONICS CO., LTD.
Address of Applicant :NO. 115 CUEIHUA RD., GUSHAN DISTRICT KAOHSIUNG, TAIWAN
(72)**Name of Inventor :**
1)HUANG, JUNG-PEI

(57) Abstract :
A motor stator automatically assembling system includes a feeding unit, a wire-winding unit, a first conveyer unit, a second conveyer unit, a first assembly unit and a second assembly unit. A motor stator automatically assembling method includes: the feeding unit is operated to feed a plurality of insulation members; the insulation members are arranged on the first conveyer unit to convey to the wire-winding unit; the wire-winding unit is operated to wind wires on the insulation members to form a plurality of wire-wound insulation members; the wire-wound insulation members are arranged on the second conveyer unit to convey to the first assembly unit; the first assembly unit is operated to insert pole teeth into the wire-wound insulation members to form a plurality of compact pole tooth sets; the second assembly unit is operated to combine the compact pole tooth sets with a stator ring frame to form an assembled motor stator.

No. of Pages : 31 No. of Claims : 17

(12) PATENT APPLICATION PUBLICATION
(19) INDIA
(22) Date of filing of Application :23/07/2013
(21) Application No.6559/DELNP/2013 A
(43) Publication Date : 19/12/2014

(54) Title of the invention : IMPLANTABLE DEVICE FOR CONTROLLED RELEASE OF LOW SOLUBILITY DRUG

(51) International classification	:A61K9/20,A61K31/40,A61L31/16
(31) Priority Document No	:61/439665
(32) Priority Date	:04/02/2011
(33) Name of priority country	:U.S.A.
(86) International Application No	:PCT/US2012/023989
Filing Date	:06/02/2012
(87) International Publication No	:WO 2012/106714
(61) Patent of Addition to Application Number	:NA
Filing Date	:NA
(62) Divisional to Application Number	:NA
Filing Date	:NA

(71)**Name of Applicant :**
1)TARIS BIOMEDICAL INC.
Address of Applicant :99 Hayden Avenue Suite 100 Lexington MA 02421 U.S.A.
(72)**Name of Inventor :**
1)LEE Heejin
2)HO DUC Hong Linh
3)SANSONE Matthew

(57) Abstract :
in vivoImplantable drug delivery devices are provided that are deformable between a relatively straightened shape suitable for deployment and a retention shape suited to retain the device within the bladder or other body cavity. While in the body cavity the devices release drug from solid drug units housed in the devices. The devices are designed to house the solid drug units in a way that exposes one or more sides of the solid drug units to the fluid at the site of deployment. Methods for using the devices for administering drug and making the devices also are provided.

No. of Pages : 67 No. of Claims : 33

(12) PATENT APPLICATION PUBLICATION
(19) INDIA
(22) Date of filing of Application :24/05/2013
(21) Application No.1565/DEL/2013 A
(43) Publication Date : 19/12/2014

(54) Title of the invention : TETRAHYDRO-2H-PYRANO[3,2-C]ISOCHROMENE-6-ONES FOR THE TREATMENT OF INFLAMMATORY DISORDERS

(51) International classification :C07D
(31) Priority Document No :NA
(32) Priority Date :NA
(33) Name of priority country :NA
(86) International Application No :NA
Filing Date :NA
(87) International Publication No : NA
(61) Patent of Addition to Application Number :NA
Filing Date :NA
(62) Divisional to Application Number :NA
Filing Date :NA

(71)**Name of Applicant :**
1)COUNCIL OF SCIENTIFIC & INDUSTRIAL RESEARCH
Address of Applicant :ANUSANDHAN BHAWAN, RAFI MARG, NEW DELHI - 110001, INDIA. Delhi India
(72)**Name of Inventor :**
1)JAIN SHREYANS KUMAR
2)SIDIQ TABASUM
3)MEENA SAMDARSHI
4)KHAJURIA ANAMIKA
5)VISHWAKARMA RAM ASREY
6)BHARATE SANDIP BIBISHAN

(57) Abstract :
The present invention relates to 2,3 ,4,4a-tetrahydro-3 ,4,8,1 a-tetrahydroxy-2- (hydroxymethyl)-9-methoxypyrano[3,2-c]isochromen-6(lObH)-one analogs of the Formula I, wherein, R, R and R are as herein described. In addition, the invention relates to methods of using compounds for treating or preventing various inflammatory disorders such as rheumatoid arthritis, inflammatory bowel disease, psoriasis, asthma and chronic obstructive pulmonary disorder.

No. of Pages : 28 No. of Claims : 11

(12) PATENT APPLICATION PUBLICATION
(19) INDIA
(22) Date of filing of Application :22/07/2013
(21) Application No.6552/DELNP/2013 A
(43) Publication Date : 19/12/2014

(54) Title of the invention : SYSTEM AND DEVICE FOR NEONATAL RESUSCITATION AND INITIAL RESPIRATORY SUPPORT

(51) International classification :A61M16/00
(31) Priority Document No :11500923
(32) Priority Date :08/02/2011
(33) Name of priority country :Sweden
(86) International Application No :PCT/SE2012/050119
Filing Date :08/02/2012
(87) International Publication No :WO 2012/108826
(61) Patent of Addition to Application Number :NA
Filing Date :NA
(62) Divisional to Application Number :NA
Filing Date :NA

(71)**Name of Applicant :**
1)VENTINVENT AB
Address of Applicant :Bangrdsgatan 71 S 831 45 –stersund Sweden
(72)**Name of Inventor :**
1)NILSSON Kjell
2)DREVHAMMAR Thomas

(57) Abstract :
The present invention relates to a device and a system for positive pressure ventilation and continuous positive airway pressure (CPAP) treatment for neonatal resuscitation and initial respiratory support. The device and system are designed and tested for preterm and term neonatal use. The device is easy to use and allows rapid switch between PPV and CPAP without change of equipment and significantly reduces the imposed work of breathing for a breathing child treated with CPAP.

No. of Pages : 24 No. of Claims : 13

(12) PATENT APPLICATION PUBLICATION
(19) INDIA
(22) Date of filing of Application :22/07/2013
(21) Application No.6553/DELNP/2013 A
(43) Publication Date : 19/12/2014

(54) Title of the invention : INTEGRATED STEEL MANUFACTURING SYSTEM AND METHOD FOR INTEGRATED STEEL MANUFACTURING

(51) International classification :C21B13/14
(31) Priority Document No :1020100137281
(32) Priority Date :28/12/2010
(33) Name of priority country :Republic of Korea
(86) International Application No :PCT/KR2011/010200
Filing Date :28/12/2011
(87) International Publication No :WO 2012/091437
(61) Patent of Addition to Application Number :NA
Filing Date :NA
(62) Divisional to Application Number :NA
Filing Date :NA

(71)**Name of Applicant :**
1)POSCO
Address of Applicant :1 Koedong dong Nam gu Pohang si Kyungsangbook do 790 300 Republic of Korea
(72)**Name of Inventor :**
1)CHUNG Joon Yang
2)KWON Oh Joon
3)PARK Sung Ho
4)KIM Dong Soo
5)PARK Jong Su
6)CHOI Jin Sik
7)KIM Seong Yeon
8)KIM Do Hyung
9)PAEK Chan Joon
10)LEE Jong Hwan

(57) Abstract :
According to one aspect of the present invention provided is an integrated steel manufacturing system comprising: a reduced fine iron ore manufacturing device comprising a first fluidized furnace equipment and a second fluidized furnace equipment that each include at least one fluidized furnace for reducing fine iron ore to manufacture a reduced fine iron ore; a first agglomerating device and a second agglomerating device for receiving the reduced fine iron ore from the first fluidized furnace equipment and the second fluidized furnace equipment respectively and agglomerating same to manufacture an agglomerated reduced iron; an iron making device comprising a melting furnace for melting the agglomerated reduced iron that is agglomerated in the first agglomerating device and manufacturing molten iron; and a steel making device for receiving the molten iron and the agglomerated reduced iron which is manufactured in the iron making device and manufacturing molten steel.

No. of Pages : 89 No. of Claims : 17

(12) PATENT APPLICATION PUBLICATION
(19) INDIA
(22) Date of filing of Application :23/07/2013
(21) Application No.6554/DELNP/2013 A
(43) Publication Date : 19/12/2014

(54) Title of the invention : A METHOD FOR PREPARING POTABLE WATER FROM CONTAMINATED CRUDE WATER

(51) International classification :C02F1/58,C02F1/52,C02F1/64
(31) Priority Document No :PA 2011 70014
(32) Priority Date :11/01/2011
(33) Name of priority country :Denmark
(86) International Application No :PCT/DK2012/050004
Filing Date :04/01/2012
(87) International Publication No :WO 2012/095110
(61) Patent of Addition to Application Number :NA
Filing Date :NA
(62) Divisional to Application Number :NA
Filing Date :NA

(71)**Name of Applicant :**
1)MICRODROP AQUA APS
Address of Applicant :Skudehavnsvej 5 DK 2100 K¸benhavn ˜ Denmark
(72)**Name of Inventor :**
1) DALB˜ Suni

(57) Abstract :
The invention relates to a method for preparing potable water from crude water containing trace species contaminants comprising the steps of separating iron compounds and optionally other compounds from the crude water contacting the water with a ferrous material co precipitating trace species upon aeration and recovering drinking water.

No. of Pages : 15 No. of Claims : 7

(12) PATENT APPLICATION PUBLICATION
(19) INDIA
(22) Date of filing of Application :23/07/2013
(21) Application No.6556/DELNP/2013 A
(43) Publication Date : 19/12/2014

(54) Title of the invention : VENDING MACHINE

(51) International classification :G07F11/60
(31) Priority Document No :2011057524
(32) Priority Date :16/03/2011
(33) Name of priority country :Japan
(86) International Application No :PCT/JP2011/071202
Filing Date :16/09/2011
(87) International Publication No :WO 2012/124192
(61) Patent of Addition to Application Number :NA
Filing Date :NA
(62) Divisional to Application Number :NA
Filing Date :NA

(71)**Name of Applicant :**
1)Fuji Electric Co. Ltd.
Address of Applicant :1 1 Tanabeshinden Kawasaki ku Kawasaki shi Kanagawa 2109530 Japan
(72)**Name of Inventor :**
1)YASAKA Yoshio

(57) Abstract :
A vending machine comprises: product racks (30a 30d) which are disposed in a plurality of levels in the vertical direction in a storage chamber (1a) whereon a plurality of product storage columns (31) are disposed in parallel from left to right. The vending machine further comprises: a rack selection mechanism (60) which puts all of the product racks (30a 30d) in a state of restricted extraction of the product when in a standby state and which when a sell instruction is received allows the extraction of the product only from the product rack (30a 30d) of the level which is designated; extraction mechanisms (50) which restrict the product being extracted from the product storage columns (31) under ordinary conditions and which when the extraction of the product is allowed by the rack selection mechanism (60) operate and allow the extraction of only the frontmost product; and restriction means (70) for allowing the operation of only one of the extraction mechanisms (50) when the extraction of the product is allowed on the product racks (30a 30d).

No. of Pages : 103 No. of Claims : 9

(12) PATENT APPLICATION PUBLICATION
(19) INDIA
(22) Date of filing of Application :17/05/2013
(21) Application No.1469/DEL/2013 A
(43) Publication Date : 19/12/2014

(54) Title of the invention : BONDED FUSION BOWL

(51) International classification :G21B
(31) Priority Document No :NA
(32) Priority Date :NA
(33) Name of priority country :NA
(86) International Application No :NA
Filing Date :NA
(87) International Publication No : NA
(61) Patent of Addition to Application Number :NA
Filing Date :NA
(62) Divisional to Application Number :NA
Filing Date :NA

(71)**Name of Applicant :**
1)PADIA, ASHISH
Address of Applicant :B - 73, WAZIRPUR INDUSTRIAL AREA, NEW DELHI - 110088 Delhi India
(72)**Name of Inventor :**
1)PADIA, ASHISH

(57) Abstract :
The invention provides a corrosion free and noise free animal feeder pet bowl. The bowl is made up of plastic, stainless steel and rubber. Rubber is used for anti-skid feature which prevents the pet from scattering the food on the floor. Heat and pressure is applied to attach all the components of the invention. The bowl is easy to handle, to clean and can be easily used in any weather conditions.

No. of Pages : 25 No. of Claims : 17

(12) PATENT APPLICATION PUBLICATION
(19) INDIA
(22) Date of filing of Application :30/05/2013
(21) Application No.1632/DEL/2013 A
(43) Publication Date : 19/12/2014

(54) Title of the invention : REAL TIME PCR BASED METHOD FOR TRANSGENE DETECTION

(51) International classification	:C12Q, C12N
(31) Priority Document No	:NA
(32) Priority Date	:NA
(33) Name of priority country	:NA
(86) International Application No	:NA
Filing Date	:NA
(87) International Publication No	: NA
(61) Patent of Addition to Application Number	:NA
Filing Date	:NA
(62) Divisional to Application Number	:NA
Filing Date	:NA

(71)**Name of Applicant :**
1)DIRECTOR GENERAL, DEFFENCE RESEARCH & DEVELOPMENT ORGANISATION
Address of Applicant :MINISTRY OF DEFENCE, GOVT OF INDIA, ROOM NO 348, B-WING, DRDO BHAWAN, RAJAJI MARG, NEW DELHI-110001 Delhi India
(72)**Name of Inventor :**
1)YADAV, PATADE VIKAS
2)GROVER, ATUL
3)KUMARI, MAYA
4)GUPTA, SANJAY MOHAN
5)AHMED, ZAKWAN

(57) Abstract :
A method for identification of transgenic plants is provided herein. In particular, the present invention provides nucleotide probe and primers sequences complementary to the selectable marker gene npt 11. The probe and primer sequences facilitate non ambiguous identification of transgenic plants, harboring the selectable marker gene, by real time PCR or conventional PCR based detection.

No. of Pages : 38 No. of Claims : 7

(12) PATENT APPLICATION PUBLICATION
(19) INDIA
(22) Date of filing of Application :30/05/2013
(21) Application No.1633/DEL/2013 A
(43) Publication Date : 19/12/2014

(54) Title of the invention : SYSTEMS AND METHODS FOR RECORDING A MULTIMEDIA STREAM

(51) International classification :H04L
(31) Priority Document No :NA
(32) Priority Date :NA
(33) Name of priority country :NA
(86) International Application No :NA
Filing Date :NA
(87) International Publication No : NA
(61) Patent of Addition to Application Number :NA
Filing Date :NA
(62) Divisional to Application Number :NA
Filing Date :NA

(71)**Name of Applicant :**
1)ALCATEL LUCENT
Address of Applicant :3, AVENUE OCTAVE GREARD 75007 PARIS, FRANCE
(72)**Name of Inventor :**
1)RAJAPANDIYAN, KARTHICK
2)PANDURANGA, HARIKUMAR

(57) Abstract :
Methods and systems for recording a multimedia stream in a storage medium are described. In an embodiment, the method comprises determining a size of a multimedia stream to be recorded. Thereafter, the storage medium is selected from among a plurality of storage media. Further, the multimedia stream is received for storing in the storage medium and while storing total storage consumed in the storage medium is monitored and it is estimated whether sufficient storage space is available for a remaining part of the multimedia stream. Thereafter, an adaptation request is transmitted to a delivery server (106) based on the monitoring and the estimating. Further, the remaining part of the multimedia stream with adapted content quality is received based on the adaptation request. Subsequently, the remaining part of the multimedia stream is stored in the storage space available in the storage medium to record the multimedia stream.

No. of Pages : 24 No. of Claims : 13

(12) PATENT APPLICATION PUBLICATION
(19) INDIA
(22) Date of filing of Application :23/07/2013
(21) Application No.6566/DELNP/2013 A
(43) Publication Date : 19/12/2014

(54) Title of the invention : RADIOFLUORINATION METHOD

(51) International classification :C07B59/00,C07D213/61
(31) Priority Document No :1103455.0
(32) Priority Date :01/03/2011
(33) Name of priority country :U.K.
(86) International Application No :PCT/EP2012/053547
Filing Date :01/03/2012
(87) International Publication No :WO 2012/117069
(61) Patent of Addition to Application Number :NA
Filing Date :NA
(62) Divisional to Application Number :NA
Filing Date :NA

(71)**Name of Applicant :**
1)GE HEALTHCARE LIMITED
Address of Applicant :Amersham Place Little Chalfont Buckinghamshire HP7 9NA U.K.
(72)**Name of Inventor :**
1)BETTS Helen May
2)KHAN Imtiaz
3)ROBINS Edward George

(57) Abstract :
Provided by the present invention is a novel method for obtaining an 18F-labelled compound wherein said compound comprises an 18F- labelled pyridyl ring. The method of the invention is advantageous over the prior art methods as it provides these compounds in higher radiochemical yields than have been possible with previous methods. Also provided by the present invention is an 18F- labelled synthon useful in the method of the invention.

No. of Pages : 39 No. of Claims : 14

(12) PATENT APPLICATION PUBLICATION
(19) INDIA
(22) Date of filing of Application :23/07/2013
(21) Application No.6567/DELNP/2013 A
(43) Publication Date : 19/12/2014

(54) Title of the invention : ASSEMBLY OF A BEAD WIRE BUNDLE MANUFACTURING DEVICE AND OF A TOOL

(51) International classification :B29D30/48
(31) Priority Document No :2008028
(32) Priority Date :23/12/2011
(33) Name of priority country :Netherlands
(86) International Application No :PCT/NL2012/050862
Filing Date :07/12/2012
(87) International Publication No :WO 2013/095106
(61) Patent of Addition to Application Number :NA
Filing Date :NA
(62) Divisional to Application Number :NA
Filing Date :NA

(71)**Name of Applicant :**
1)VMI HOLLAND B.V.
Address of Applicant :Gelriaweg 16 NL 8161 RK Epe Netherlands
(72)**Name of Inventor :**
1)VAN LAAR Gerardus Johannes Catharina

(57) Abstract :
Assembly of a manufacturing device (4) with drum segments (61 62 63 64) for manufacturing bead wire bundles and a tool (1) for removing or arranging the drum segments wherein the manufacturing device is provided with segment holders (51 52 53 54) each having a first coupling section wherein the drum segments each comprise a second coupling section wherein the tool (1) is provided with a support body (10) and third coupling sections (17) that are distributed over the support body wherein the number of third coupling sections at least equals the number of second coupling sections (67) wherein the positions of the third coupling sections of the tool are a direct reflection of the positions of the second coupling sections of the drum segments wherein the drum segments are provided with coupling members wherein in a first condition of the coupling members the second coupling sections are coupled to the first coupling sections by means of the coupling members wherein in a second condition of the coupling members the third coupling sections of the tool are coupled to the second coupling sections of the drum segments by means of the coupling members.

No. of Pages : 39 No. of Claims : 27

(12) PATENT APPLICATION PUBLICATION
(19) INDIA
(22) Date of filing of Application :19/07/2013
(21) Application No.6455/DELNP/2013 A
(43) Publication Date : 19/12/2014

(54) Title of the invention : COMPOUNDS AND METHODS FOR ENHANCING HAIR GROWTH

(51) International classification :A61K31/216,A61K31/192,A61K31/381
(31) Priority Document No :61/435126
(32) Priority Date :21/01/2011
(33) Name of priority country :U.S.A.
(86) International Application No :PCT/US2012/022133
Filing Date :21/01/2012
(87) International Publication No :WO 2012/100238
(61) Patent of Addition to Application Number :NA
Filing Date :NA
(62) Divisional to Application Number :NA
Filing Date :NA

(71)**Name of Applicant :**
1)ALLERGAN INC.
Address of Applicant :2525 Dupont Drive Irvine California 92886 U.S.A.
(72)**Name of Inventor :**
1)WANG Jenny W.
2)WOODWARD David F.

(57) Abstract :
The present invention provides a method for stimulating hair growth in a mammalian species or converting vellus hair or intermediate hair to terminal hair or stimulating hair follicles to increase hair growth and one or more properties selected from the group consisting of luster sheen brilliance gloss glow shine or patina of hair associated with the follicles or increasing one or more of:
length thickness number and density of eyelash hair or eyebrow hair comprising applying to the skin of a patient a composition comprising an effective amount of an EP3 agonist or an EP4 agonist prodrug or a mixture thereof. Such compositions which are used in treating the skin or scalp of a human or non human animal may comprise an effective amount of 3 7 or 3 and 7 thia prostanoic acid. A mixture of 3 7 dithia PGE1 and 3 7 dithiaPGEl isopropyl ester is preferred for this treatment.

No. of Pages : 47 No. of Claims : 20

(12) PATENT APPLICATION PUBLICATION
(19) INDIA
(22) Date of filing of Application :19/07/2013
(21) Application No.6456/DELNP/2013 A
(43) Publication Date : 19/12/2014

(54) Title of the invention : ANTIBODY MOLECULES WHICH BIND IL 17A AND IL 17F

(51) International classification :C07K16/24
(31) Priority Document No :61/432814
(32) Priority Date :14/01/2011
(33) Name of priority country :U.S.A.
(86) International Application No :PCT/GB2012/050050
Filing Date :11/01/2012
(87) International Publication No :WO 2012/095662
(61) Patent of Addition to Application Number :NA
Filing Date :NA
(62) Divisional to Application Number :NA
Filing Date :NA

(71)**Name of Applicant :**
1)UCB PHARMA S.A.
Address of Applicant :60 Alle de la Recherche B 1070 Brussels Belgium
(72)**Name of Inventor :**
1)ADAMS Ralph
2)BAKER Terence Seward
3)LAWSON Alastair David Griffiths

(57) Abstract :
The invention relates to antibody molecules having specificity for antigenic determinants of both IL 17A and IL 17F therapeutic uses of the antibody molecules and methods for producing said antibody molecules.

No. of Pages : 56 No. of Claims : 19

(12) PATENT APPLICATION PUBLICATION
(19) INDIA
(22) Date of filing of Application :23/07/2013
(21) Application No.6570/DELNP/2013 A
(43) Publication Date : 19/12/2014

(54) Title of the invention : SCATTERING PREVENTION STRUCTURE OF GRINDING MACHINE

(51) International classification :B24B55/04
(31) Priority Document No :2010286978
(32) Priority Date :24/12/2010
(33) Name of priority country :Japan
(86) International Application No :PCT/JP2011/079724
Filing Date :21/12/2011
(87) International Publication No :WO 2012/086726
(61) Patent of Addition to Application Number :NA
Filing Date :NA
(62) Divisional to Application Number :NA
Filing Date :NA

(71)**Name of Applicant :**
1)KOMATSU NTC LTD.
Address of Applicant :100 Fukuno Nanto city Toyama 9391595 Japan
(72)**Name of Inventor :**
1)MICHIYOSHI Kazunori
2)KOGURA Kazuya

(57) Abstract :
This scattering prevention structure of a grinding machine has: a pair of supporting tables; an X axis saddle which supports a grinding head such that the grinding head can freely move in the advancing/retracing direction with respect to a work; a Z axis saddle which supports the X axis saddle such that the X axis saddle can freely move in the rotating axis direction of the work; and a grinding stone cover. The structure is provided with: a left side surface cover and a right side surface cover which are respectively attached to the sides on which the supporting tables face each other; a Z axis shielding cover (4) which shields the left side surface cover the right side surface cover (3) and the grinding stone cover (18) one from another and which has the grinding stone cover (18) attached thereto such that the grinding stone cover can freely move in the rotating axis direction; and an accordion cover (5) which is attached to the grinding stone cover (18) such that the grinding stone head (14a) fits in the accordion cover and which shields the grinding stone head (14a) and a grinding stone cover (18) one from the other. The grinding stone cover (18) is fixed to the Z axis saddle (16) such that the grinding stone cover opens in a machining region and the grinding stone head (14a) can freely move with respect to the grinding stone cover (18) in the advancing/retracting direction with respect to the work (W) by having the accordion cover (5) therebetween. With this configuration the size of the machining chamber is reduced and shielding performance is improved.

No. of Pages : 22 No. of Claims : 5

(12) PATENT APPLICATION PUBLICATION
(19) INDIA
(22) Date of filing of Application :23/07/2013
(21) Application No.6572/DELNP/2013 A
(43) Publication Date : 19/12/2014

(54) Title of the invention : METHOD OF PROVIDING ASSISTANCE TO THE END USER OF A SOFTWARE APPLICATION

(51) International classification :G06Q10/00
(31) Priority Document No :10306534.8
(32) Priority Date :28/12/2010
(33) Name of priority country :EPO
(86) International Application No :PCT/EP2011/074124
Filing Date :28/12/2011
(87) International Publication No :WO 2012/089750
(61) Patent of Addition to Application Number :NA
Filing Date :NA
(62) Divisional to Application Number :NA
Filing Date :NA

(71)**Name of Applicant :**
1)AMADEUS S.A.S.
Address of Applicant :485 route du Pin Montard SOPHIA ANTIPOLIS F 06410 Biot France
(72)**Name of Inventor :**
1)SAVORNIN Richard
2)GRANDEMANGE Alexis
3)GASTALDI Christian

(57) Abstract :
A method of providing assistance to a remote end user of an end user software application (120 200) from an agent of an assistance center is described. All the transactions initiated by the end user of the end user software application (120 200) are recorded in a contextual database locally for applications running exclusively on customer PC or remotely for Web applications). Instrumented pages are delivered to the end user. They include each a help request means. A server of a desktop sharing application is installed in the PC of the agent. When the end user is requesting assistance all the entries already made by the end user on a current instrumented page are uploaded. A waiting page and a client side of the desktop sharing application are also downloaded to the PC of the end user. The end user to be assisted is assigned to the agent when available. Then PC of the agent gets a clone of the current instrumented page from the contextual database and a secure communication tunnel between the agent and the end user is established. The client side of the desktop sharing application is finally activated on the customer PC which lets end user view desktop of the PC of the agent and allows starting an assistance session between the agent and the end user. All that being done without any software pre installation on the client PC.

No. of Pages : 47 No. of Claims : 20

(12) PATENT APPLICATION PUBLICATION
(19) INDIA
(22) Date of filing of Application :19/07/2013
(21) Application No.6457/DELNP/2013 A
(43) Publication Date : 19/12/2014

(54) Title of the invention : LOST MOTION VARIABLE VALVE ACTUATION SYSTEM WITH VALVE DEACTIVATION

(51) International classification :F01L3/00
(31) Priority Document No :61/436741
(32) Priority Date :27/01/2011
(33) Name of priority country :U.S.A.
(86) International Application No :PCT/US2012/022836
Filing Date :27/01/2012
(87) International Publication No :WO 2012/103405
(61) Patent of Addition to Application Number :NA
Filing Date :NA
(62) Divisional to Application Number :NA
Filing Date :NA

(71)**Name of Applicant :**
1)SCUDERI GROUP INC.
Address of Applicant :1111 Elm Street Suite 33 West Springfield MA 01089 U.S.A.
(72)**Name of Inventor :**
1)MELDOLESI Riccardo
2)SCHWOERER John
3)PATURZO Joseph
4)SWANBON Bruce

(57) Abstract :
Devices and related methods are disclosed that generally involve the selective deactivation of one or more engine valves. In one embodiment a split cycle internal combustion engine is provided in which a high speed trigger valve is used to fill and drain a hydraulic tappet that forms part of a lost motion system of an engine valve. A spool valve can be used to selectively disconnect the tappet from the trigger valve thereby deactivating the associated engine valve (i.e. preventing the engine valve from opening). The devices and methods disclosed herein also have application in conventional internal combustion engines and can be used with inwardly opening and/or outwardly opening valves.

No. of Pages : 36 No. of Claims : 15

(12) PATENT APPLICATION PUBLICATION
(19) INDIA
(22) Date of filing of Application :19/07/2013
(21) Application No.6458/DELNP/2013 A
(43) Publication Date : 19/12/2014

(54) Title of the invention : LOST MOTION VARIABLE VALVE ACTUATION SYSTEM WITH CAM PHASER

(51) International classification :F01L1/344,F01L1/18
(31) Priority Document No :61/436735
(32) Priority Date :27/01/2011
(33) Name of priority country :U.S.A.
(86) International Application No :PCT/US2012/022830
Filing Date :27/01/2012
(87) International Publication No :WO 2012/103401
(61) Patent of Addition to Application Number :NA
Filing Date :NA
(62) Divisional to Application Number :NA
Filing Date :NA

(71)**Name of Applicant :**
1)SCUDERI GROUP INC.
Address of Applicant :1111 Elm Street Suite 33 West Springfield MA 01089 U.S.A.
(72)**Name of Inventor :**
1)MELDOLESI Riccardo
2)SCHWOERER John
3)PATURZO Joseph

(57) Abstract :
Devices and related methods are disclosed that generally involve variable actuation of engine valves. In one embodiment a valve train for a split cycle internal combustion engine or an air hybrid split cycle engine is provided that includes a cam phaser a dwell cam an adjustable mechanical element for performing a variable valve actuation function and/or a valve seating control device. The devices and methods disclosed herein also have application in conventional internal combustion engines and can actuate inwardly opening and/or outwardly opening valves.

No. of Pages : 76 No. of Claims : 37

(12) PATENT APPLICATION PUBLICATION
(19) INDIA
(22) Date of filing of Application :19/07/2013
(21) Application No.6459/DELNP/2013 A
(43) Publication Date : 19/12/2014

(54) Title of the invention : VARIABLE FORCE VALVE SPRING

(51) International classification :F01L3/10
(31) Priority Document No :61/436739
(32) Priority Date :27/01/2011
(33) Name of priority country :U.S.A.
(86) International Application No :PCT/US2012/022834
Filing Date :27/01/2012
(87) International Publication No :WO 2012/103404
(61) Patent of Addition to Application Number :NA
Filing Date :NA
(62) Divisional to Application Number :NA
Filing Date :NA

(71)**Name of Applicant :**
1)SCUDERI GROUP INC.
Address of Applicant :1111 Elm Street Suite 33 West Springfield MA 01089 U.S.A.
(72)**Name of Inventor :**
1)MELDOLESI Riccardo
2)SCHWOERER John
3)PATURZO Joseph

(57) Abstract :
Devices and related methods are disclosed that generally involve variable force valve springs for controlling the motion of an engine valve. The force exerted by the valve spring can be adjusted by altering the pressure at which a fluid is supplied to a fluid chamber thereof by altering the volume of the fluid chamber and/or by changing the aggregate surface area over which fluid pressure is coupled to the engine valve. Associated fluid control systems are also disclosed herein as are various methods for adjusting the force of a valve spring based on a variety of engine parameters such as engine speed engine load and/or a combination thereof.

No. of Pages : 52 No. of Claims : 41

(12) PATENT APPLICATION PUBLICATION
(19) INDIA
(22) Date of filing of Application :19/07/2013
(21) Application No.6460/DELNP/2013 A
(43) Publication Date : 19/12/2014

(54) Title of the invention : APPARATUS AND METHOD FOR DETERMING DISPLACER POSITION IN A FLOWMETER PROVER

(51) International classification :G01F25/00,G01F3/00
(31) Priority Document No :61/435173
(32) Priority Date :21/01/2011
(33) Name of priority country :U.S.A.
(86) International Application No :PCT/US2012/021160
Filing Date :13/01/2012
(87) International Publication No :WO 2012/099777
(61) Patent of Addition to Application Number :NA
Filing Date :NA
(62) Divisional to Application Number :NA
Filing Date :NA

(71)**Name of Applicant :**
1)DANIEL MEASUREMENT AND CONTROL INC.
Address of Applicant :11100 Brittmoore Park Drive Houston Houston Texas 77041 U.S.A.
(72)**Name of Inventor :**
1)WEAVER Drew S.

(57) Abstract :
Apparatus and methods for proving a flowmeter. In one embodiment a flowmeter prover includes a flow tube a displacer and a signal analyzer. The displacer is moveable in a flow passage of the flow tube. A magnetic target is disposed on the displacer. One or more inductive transducers are disposed on the flow tube and configured to detect the magnetic target as the displacer moves in the flow tube. The signal analyzer is configured to detect a maximum slope of rising and falling edges of a signal generated by the transducer responsive to the magnetic target traversing the transducer. The signal analyzer is further configured to determine displacer velocity based on the detected maximum slope.

No. of Pages : 31 No. of Claims : 28

(12) PATENT APPLICATION PUBLICATION
(19) INDIA
(22) Date of filing of Application :23/07/2013
(21) Application No.6576/DELNP/2013 A
(43) Publication Date : 19/12/2014

(54) Title of the invention : TARGETED PRETREATMENT AND SELECTIVE RING OPENING IN LIQUID FULL REACTORS

(51) International classification :C10G65/12,C10G45/58,C10G45/48
(31) Priority Document No :13/025427
(32) Priority Date :11/02/2011
(33) Name of priority country:U.S.A.
(86) International Application No :PCT/US2012/024863
Filing Date :13/02/2012
(87) International Publication No :WO 2012/109649
(61) Patent of Addition to Application Number :NA
Filing Date :NA
(62) Divisional to Application Number :NA
Filing Date :NA

(71)**Name of Applicant :**
1)E. I. DU PONT DE NEMOURS AND COMPANY
Address of Applicant :1007 Market Street Wilmington Delaware 19898 U.S.A.
(72)**Name of Inventor :**
1)DINDI Hasan
2)MURILLO Luis Eduardo
3)PULLEY Alan Howard

(57) Abstract :
A process for hydroprocessing hydrocarbons in a combined targeted pretreatment and selective ring opening unit wherein the targeted pretreatment comprises at least two stages in a single liquid recycle loop. The process operates as a liquid full process wherein all of the hydrogen dissolves in the liquid phase. Heavy hydrocarbons and light cycle oils can be converted in the process to provide a liquid product having over 50% in the diesel boiling range with properties to meet use in low sulfur diesel.

No. of Pages : 45 No. of Claims : 20

(12) PATENT APPLICATION PUBLICATION
(19) INDIA
(22) Date of filing of Application :19/07/2013
(21) Application No.6471/DELNP/2013 A
(43) Publication Date : 19/12/2014

(54) Title of the invention : SYSTEM AND METHOD FOR REDUCING EMISSIONS FROM A BOILER

(51) International classification :F23D1/00
(31) Priority Document No :61/426616
(32) Priority Date :23/12/2010
(33) Name of priority country :U.S.A.
(86) International Application No :PCT/US2011/066154
Filing Date :20/12/2011
(87) International Publication No :WO 2012/088110
(61) Patent of Addition to Application Number :NA
Filing Date :NA
(62) Divisional to Application Number :NA
Filing Date :NA

(71)**Name of Applicant :**
1)ALSTOM TECHNOLOGY LTD
Address of Applicant :Brown Boveri Strasse 7 CH 5400 Baden Switzerland
(72)**Name of Inventor :**
1)LEVASSEUR Armand A.

(57) Abstract :
A system (10) and method for reducing emissions from a boiler (40). A boiler (40) generally has a combustion area (42). The system (10) further includes a fuel pipe (30) for delivering fuel. The system (10) further includes a conduit (20). A bore (26) extends through the conduit (20). The bore (26) of the conduit (20) is in fluid communication with the fuel pipe (30) and the combustion area (42) of the boiler (40). A pre ignition source (50) is positioned in the conduit (20). The pre ignition source (50) operates to pre ignite at least a portion of the fuel flowing through the conduit (20).

No. of Pages : 14 No. of Claims : 16

(12) PATENT APPLICATION PUBLICATION
(19) INDIA
(22) Date of filing of Application :19/07/2013
(21) Application No.6472/DELNP/2013 A
(43) Publication Date : 19/12/2014

(54) Title of the invention : METALLURGICAL PLANT GAS CLEANING SYSTEM AND METHOD OF CLEANING AN EFFLUENT GAS

(51) International classification :F27D17/00,C25C3/22
(31) Priority Document No :10196375.9
(32) Priority Date :22/12/2010
(33) Name of priority country :EPO
(86) International Application No :PCT/IB2011/002938
Filing Date :05/12/2011
(87) International Publication No :WO 2012/085634
(61) Patent of Addition to Application Number :NA
Filing Date :NA
(62) Divisional to Application Number :NA
Filing Date :NA

(71)**Name of Applicant :**
1)ALSTOM TECHNOLOGY LTD
Address of Applicant :Brown Boveri Strasse 7 CH 5400 Baden Switzerland
(72)**Name of Inventor :**
1)SORHUUS Anders Kenneth
2)WEDDE Geir

(57) Abstract :
A metallurgical plant gas cleaning system (5) comprises at least one gas cleaning unit (28) and a gas flow generating device (22) for generating a flow of effluent gas to be cleaned through the gas cleaning unit (28). The gas cleaning system (5) further comprises a heat exchanger (26) for cooling said effluent gas and for generating a heated fluid and a heated fluid propelled drive unit (46) for receiving the heated fluid generated by said heat exchanger (26) to power said gas flow generating device (22).

No. of Pages : 25 No. of Claims : 14

(12) PATENT APPLICATION PUBLICATION
(19) INDIA
(22) Date of filing of Application :19/07/2013
(21) Application No.6473/DELNP/2013 A
(43) Publication Date : 19/12/2014

(54) Title of the invention : MIXING ELEMENT FOR GAS TURBINE UNITS WITH FLUE GAS RECIRCULATION

(51) International classification :F02C3/34,F02C7/04,F02C7/057
(31) Priority Document No :00115/11
(32) Priority Date :24/01/2011
(33) Name of priority country :Switzerland
(86) International Application No:PCT/EP2012/050964
Filing Date :23/01/2012
(87) International Publication No :WO 2012/101087
(61) Patent of Addition to Application Number :NA
Filing Date :NA
(62) Divisional to Application Number :NA
Filing Date :NA

(71)**Name of Applicant :**
1)ALSTOM TECHNOLOGY LTD
Address of Applicant :Brown Boveri Strasse 7 CH 5400 Baden Switzerland
(72)**Name of Inventor :**
1)BENZ Eribert
2)LINDQVIST Niclas Lars Olof
3)TABIKH Ali Mustapha
4)LUNDIN Lars Filip

(57) Abstract :
The invention pertains to fluegas recirculation in gas turbines and specifically to an intake section (2) upstream of the inlet of a compressor (1) of a gas turbine unit (1 7) with fluegas recirculation comprising at least one section (22) with a flow path (31) defined by sidewalls (28 30) in which the fresh airflow of the intake air is flowing along a principal airflow direction (33) comprising at least one mixing duct (32) extending into the flow path (31) from at least one sidewall (28 30) said mixing duct (32) comprising an intake (34) at said at least one sidewall (28 30) for receiving recirculated fluegas (41) as well as comprising at least one outlet opening (37) distanced from said sidewall (28 30) for blowing recirculated fluegas (41) out of the mixing duct (32) into the airflow.

No. of Pages : 29 No. of Claims : 15

(12) PATENT APPLICATION PUBLICATION
(19) INDIA
(22) Date of filing of Application :23/07/2013
(21) Application No.6586/DELNP/2013 A
(43) Publication Date : 19/12/2014

(54) Title of the invention : MILKING DEVICE

(51) International classification :A01J5/04
(31) Priority Document No :2006046
(32) Priority Date :21/01/2011
(33) Name of priority country :Netherlands
(86) International Application No :PCT/NL2012/050030
Filing Date :19/01/2012
(87) International Publication No :WO 2012/099470
(61) Patent of Addition to Application Number :NA
Filing Date :NA
(62) Divisional to Application Number :NA
Filing Date :NA

(71)**Name of Applicant :**
1)PHARMING INTELLECTUAL PROPERTY BV
Address of Applicant :Darwinweg 24 NL 2333 CR Leiden Netherlands
(72)**Name of Inventor :**
1)SALAHEDDINE Mourad
2)KLUYTMANS Marc Peter Elvira Maria
3)STRENG Pieter Cornelis Johannes Maria

(57) Abstract :
A milking device includes a vessel (2) and cover plate (3). The vessel and the cover plate form a sealed volume that is internally divided into a collecting chamber (4) a vacuum chamber (5) and an air intake chamber (6). The collecting chamber is arranged between the vacuum chamber and the air intake chamber. The vessel has a first internal wall (7) that separates the collecting chamber from the air intake chamber with a first passage (9) between the collecting chamber and the air intake chamber arranged at the first internal wall. The vessel has a second internal wall (8) that separates the collecting chamber from the vacuum chamber with a second passage (10) between the collecting chamber and the vacuum chamber arranged at the second internal wall.

No. of Pages : 23 No. of Claims : 18

(12) PATENT APPLICATION PUBLICATION
(19) INDIA
(22) Date of filing of Application :23/07/2013
(21) Application No.6589/DELNP/2013 A
(43) Publication Date : 19/12/2014

(54) Title of the invention : METHOD OF MAKING AND USING HYDROCARBON CONVERSION CATALYST

(51) International classification :B01J29/86,B01J37/00,B01J37/04
(31) Priority Document No :61/432018
(32) Priority Date :12/01/2011
(33) Name of priority country :U.S.A.
(86) International Application No :PCT/US2012/020916
Filing Date :11/01/2012
(87) International Publication No :WO 2012/097050
(61) Patent of Addition to Application Number :NA
Filing Date :NA
(62) Divisional to Application Number :NA
Filing Date :NA

(71)**Name of Applicant :**
1)BP CORPORATION NORTH AMERICA INC.
Address of Applicant :501 Westlake Park Boulevard Houston TX 77079 U.S.A.
(72)**Name of Inventor :**
1)AMELSE Jeffrey

(57) Abstract :
Methods for making and using a catalytic composition useful in the hydrocarbon conversion reactions. The catalytic composition is made from an alumina sol that is prepared by dispersing a hydrated alumina in an aqueous medium. The alumina sol is mixed with a boron containing molecular sieve. Catalytic compositions prepared in this manner avoid the disadvantages of preparing alumina sols via the Heard process.

No. of Pages : 24 No. of Claims : 44

(12) PATENT APPLICATION PUBLICATION
(19) INDIA
(22) Date of filing of Application :19/07/2013
(21) Application No.6465/DELNP/2013 A
(43) Publication Date : 19/12/2014

(54) Title of the invention : METHOD AND APPARATUS FOR IDENTIFYING PLAYING BALLS

(51) International classification :G07C15/00,G06K9/00
(31) Priority Document No :11450010.1
(32) Priority Date :21/01/2011
(33) Name of priority country :EPO
(86) International Application No :PCT/IB2012/050309
Filing Date :23/01/2012
(87) International Publication No :WO 2012/098535
(61) Patent of Addition to Application Number :NA
Filing Date :NA
(62) Divisional to Application Number :NA
Filing Date :NA

(71)**Name of Applicant :**
1)NOVOMATIC AG
Address of Applicant :Wiener Strasse 158 A 2352 Gumpoldskirchen Austria
(72)**Name of Inventor :**
1)ROMMER Christian

(57) Abstract :
The invention relates to a method for identifying a selected playing ball from a prescribed number of playing balls wherein each of the playing balls is provided with respective symbols which differ from the other playing balls a) wherein the selected playing ball is moved from a starting position through the pickup area of an image recording unit b) wherein the mass centre of the depiction of the selected playing ball in the image from the image recording apparatus is kept unaltered for a prescribed period and does not execute a relative movement in relation to the image c) wherein the image position and the size of the depiction of the playing ball is ascertained and a check is performed to determine whether portions of the depiction of the playing ball are situated outside a lateral edge prescribed beforehand in relation to the image and d) if portions of the depiction of the playing ball are situated outside said lateral edge the playing ball is returned to the pickup area of the image recording unit and/or is repositioned and steps b) to d) are repeated and at least one image recorded using the image recording unit is taken as a basis for performing an identification method and ascertaining an identification result which corresponds to or is associated with the symbol on the surface of the selected playing ball.

No. of Pages : 40 No. of Claims : 18

(12) PATENT APPLICATION PUBLICATION
(19) INDIA
(22) Date of filing of Application :19/07/2013
(21) Application No.6466/DELNP/2013 A
(43) Publication Date : 19/12/2014

(54) Title of the invention : CENTRIFUGAL ELECTRIC PUMP FOR SUCTION OF AERIFORM FLUIDS WITH LIQUIDS ANTI INFILTRATION DEVICE

(51) International classification :F04D25/06,F04D29/10,A47L5/22
(31) Priority Document No :CR 2011 A 000002
(32) Priority Date :18/01/2011
(33) Name of priority country :Italy
(86) International Application No :PCT/IT2012/000015
Filing Date :16/01/2012
(87) International Publication No :WO 2012/098568
(61) Patent of Addition to Application Number :NA
Filing Date :NA
(62) Divisional to Application Number :NA
Filing Date :NA

(71)**Name of Applicant :**
1)E.M.B. DI BERGAMASCHINI ALFONSO
Address of Applicant :Via degli Artigiani 8 I 26014 Romanengo Italy
(72)**Name of Inventor :**
1)BERGAMASCHINI Alfonso

(57) Abstract :
A centrifugal electric pump (1) for suction of aeriform fluids with liquids anti infiltration device comprising: an electric motor (2) equipped with a shaft (3); a cylindrical suction box (4) associated with said motor (2) provided with an intake (5) for aeriform fluid with at least one exhaust port (6) and with a closing cover (7) also arranged for acting as base for said motor (2); at least one fan (8) fitted onto said shaft (3) and driven in movement by said motor (2); a bearing (9) interposed between said shaft and said base of said suction box; a liquids anti infiltration device (10) arranged between said electric motor (2) and said suction box (4) provided with a gasket (11) wherein said gasket (11) rotates with said drive shaft (3) and comprises a cylindrical main body (13) associated with said shaft and a truncated cone shaped sealing lip that cooperates with the flat face of a metal ring (12) provided between the bearing and the cover (7) of said suction box (4) to produce watertight closure of said box.

No. of Pages : 14 No. of Claims : 3

(12) PATENT APPLICATION PUBLICATION
(19) INDIA
(22) Date of filing of Application :23/07/2013
(21) Application No.6581/DELNP/2013 A
(43) Publication Date : 19/12/2014

(54) Title of the invention : TESTOSTERONE FORMULATIONS

(51) International classification :A61K9/06,A61K47/10,A61P5/26
(31) Priority Document No :11152210.8
(32) Priority Date :26/01/2011
(33) Name of priority country :EPO
(86) International Application No :PCT/EP2012/050695
Filing Date :18/01/2012
(87) International Publication No :WO 2012/101016
(61) Patent of Addition to Application Number :NA
Filing Date :NA
(62) Divisional to Application Number :NA
Filing Date :NA

(71)**Name of Applicant :**
1)FERRING B.V.
Address of Applicant :Polaris Avenue 144 NL 2132 JX Hoofddorp Netherlands
(72)**Name of Inventor :**
1)GRENIER Arnaud
2)CARRARA Dario N.

(57) Abstract :
The subject invention provides improved testosterone gel formulations.

No. of Pages : 54 No. of Claims : 38

(12) PATENT APPLICATION PUBLICATION
(19) INDIA
(22) Date of filing of Application :23/07/2013
(21) Application No.6582/DELNP/2013 A
(43) Publication Date : 19/12/2014

(54) Title of the invention : DETECTING A LEVEL OF USE IN A COMMUNICATIONS NETWORK

(51) International classification :H04W72/04
(31) Priority Document No :PCT/CN2011/000231
(32) Priority Date :15/02/2011
(33) Name of priority country :China
(86) International Application No :PCT/EP2012/052620
Filing Date :15/02/2012
(87) International Publication No :WO 2012/110566
(61) Patent of Addition to Application Number :NA
Filing Date :NA
(62) Divisional to Application Number :NA
Filing Date :NA

(71)**Name of Applicant :**
1)NOKIA SIEMENS NETWORKS OY
Address of Applicant :Karaportti 3 FI 02610 Espoo Finland
(72)**Name of Inventor :**
1)DECARREAU Guillaume
2)HE Jing
3)WIMMER Markus

(57) Abstract :
A level of use of a first radio resource is detected and a flag is set in system information if the level of use of the first radio resource is above a predetermined threshold. The system information is updated to the network.

No. of Pages : 29 No. of Claims : 26

(12) PATENT APPLICATION PUBLICATION
(19) INDIA
(22) Date of filing of Application :23/07/2013
(21) Application No.6585/DELNP/2013 A
(43) Publication Date : 19/12/2014

(54) Title of the invention : SYSTEM AND METHOD FOR MANUFACTURING A STENT

(51) International classification :B29C41/08,B05B13/02,B05B7/00
(31) Priority Document No :61/471519
(32) Priority Date :04/04/2011
(33) Name of priority country :U.S.A.
(86) International Application No :PCT/IL2012/050124
Filing Date :04/04/2012
(87) International Publication No :WO 2012/137206
(61) Patent of Addition to Application Number :NA
Filing Date :NA
(62) Divisional to Application Number :NA
Filing Date :NA

(71)**Name of Applicant :**
1)ALLIUM MEDICAL SOLUTIONS LTD.
Address of Applicant :2 Ha Eshel Street P.O.Box 3081 38900 Caesarea Industrial Park South Israel
(72)**Name of Inventor :**
1)YACHIA Daniel
2)KALFON Ziv

(57) Abstract :
The invention provides a system (1) and method for manufacturing a stent. A spraying device (14) sprays a polymeric suspension (16) onto a mandrel (4). During spraying of the polymeric suspension (16) on¬ to the mandrel (4) the mandrel (4) is manipulated by a micromanipu¬ lator (8) to produce a continuous coating on the mandrel (4) having a nonuniform thickness. The polymeric coating is allowed to cure on the mandrel (4) to form the stent which is then removed from the man¬ drel (4). The method can comprise embedding a filament (2) in the polymeric coating and incorporating one or more drugs in the stent.

No. of Pages : 17 No. of Claims : 15

(12) PATENT APPLICATION PUBLICATION
(19) INDIA
(22) Date of filing of Application :19/07/2013
(21) Application No.6477/DELNP/2013 A
(43) Publication Date : 19/12/2014

(54) Title of the invention : ANTIMICROBIAL SIZE EMULSION AND GYPSUM PANEL MADE THEREWITH

(51) International classification :A01N33/12,A01N25/34,A01P1/00
(31) Priority Document No :61/428080
(32) Priority Date :29/12/2010
(33) Name of priority country :U.S.A.
(86) International Application No :PCT/US2011/064312
Filing Date :12/12/2011
(87) International Publication No :WO 2012/091891
(61) Patent of Addition to Application Number :NA
Filing Date :NA
(62) Divisional to Application Number :NA
Filing Date :NA

(71)**Name of Applicant :**
1)UNITED STATES GYPSUM COMPANY
Address of Applicant :550 West Adams Street Chicago Illinois 60661 3676 U.S.A.
(72)**Name of Inventor :**
1)ROHLF Evan V.
2)SCALF Mark B.

(57) Abstract :
Disclosed is an emulsion of an internal paper size and a biocidal emulsifying agent such as a cationic non starchy quaternary ammonium compounds that is introduced into a paper making furnish to produce an anti microbial paper. The antimicrobial paper is useful as facing for gypsum panels. A method of making the paper includes emulsifying the internal size with a biocide before introducing the size to the paper furnish. A method of making a microbial growth resistant gypsum panel that incorporates the antimicrobial paper is also disclosed.

No. of Pages : 22 No. of Claims : 10

(12) PATENT APPLICATION PUBLICATION
(19) INDIA
(22) Date of filing of Application :19/07/2013
(21) Application No.6478/DELNP/2013 A
(43) Publication Date : 19/12/2014

(54) Title of the invention : A MULTI LOBED POROUS CERAMIC BODY AND PROCESS FOR MAKING THE SAME

(51) International classification :C04B38/00,B01J32/00,B01J23/10
(31) Priority Document No :61/428009
(32) Priority Date :29/12/2010
(33) Name of priority country :U.S.A.
(86) International Application No :PCT/US2011/064345
Filing Date :12/12/2011
(87) International Publication No :WO 2012/091898
(61) Patent of Addition to Application Number :NA
Filing Date :NA
(62) Divisional to Application Number :NA
Filing Date :NA

(71)**Name of Applicant :**
1)SAINT GOBAIN CERAMICS & PLASTISC INC.
Address of Applicant :One New Bond Street P.O. Box 15138 Worcester MA 01615 0138 U.S.A.
(72)**Name of Inventor :**
1)RICHARD Michael A.
2)COVEY John David

(57) Abstract :
A carrier having at least three lobes a first end a second end a wall between the ends and a non uniform radius of transition at the intersection of an end and the wall is disclosed. A catalyst comprising the carrier silver and promoters deposited on the carrier and useful for the epoxidation of olefins is also disclosed. A method for making the carrier a method for making the catalyst and a process for epoxidation of an olefin with the catalyst are also disclosed.

No. of Pages : 32 No. of Claims : 30

(12) PATENT APPLICATION PUBLICATION
(19) INDIA
(22) Date of filing of Application :19/07/2013
(21) Application No.6479/DELNP/2013 A
(43) Publication Date : 19/12/2014

(54) Title of the invention : METHOD OF IMPROVING GYPSUM BOARD STRENGTH

(51) International classification :C04B28/14,C04B38/10,B01F17/00
(31) Priority Document No :61/427862
(32) Priority Date :29/12/2010
(33) Name of priority country :U.S.A.
(86) International Application No :PCT/US2011/067122
Filing Date :23/12/2011
(87) International Publication No :WO 2012/092170
(61) Patent of Addition to Application Number :NA
Filing Date :NA
(62) Divisional to Application Number :NA
Filing Date :NA

(71)**Name of Applicant :**
1)UNITED STATES GYPSUM COMPANY
Address of Applicant :550 West Adams Street Chicago Illinois 60661 3676 U.S.A.
(72)**Name of Inventor :**
1)WITTBOLD James R.
2)PETERSEN Bruce L.
3)BLACKBURN David R.

(57) Abstract :
One or more of these or other problems are improved using a method of making a strong gypsum panel which includes a method for forming a hardened shell structure at the interface of a foamed bubble and a gypsum slurry. A strengthening component is selected from the group consisting of set accelerators water soluble polyphosphate salts blends of water soluble polyphosphate salts with starch boric acid fibers glycerin or combinations thereof. The strengthening component is combined with a foaming agent and with water to form an aqueous soap mixture. Foam is generated from the aqueous soap mixture and added to a gypsum slurry. Allowing the strengthening component to contact the soap bubbles prior to addition of the foam to the gypsum slurry allows the strengthening component to preferentially contact the soap film rather than be dispersed through the entire slurry.

No. of Pages : 14 No. of Claims : 10

(12) PATENT APPLICATION PUBLICATION
(19) INDIA
(22) Date of filing of Application :23/07/2013
(21) Application No.6591/DELNP/2013 A
(43) Publication Date : 19/12/2014

(54) Title of the invention : THERAPEUTIC COMPOUNDS AND COMPOSITIONS

(51) International classification :A61K31/496,A61P35/00
(31) Priority Document No :61/428030
(32) Priority Date :29/12/2010
(33) Name of priority country :U.S.A.
(86) International Application No :PCT/US2011/067752
Filing Date :29/12/2011
(87) International Publication No :WO 2012/092442
(61) Patent of Addition to Application Number :NA
Filing Date :NA
(62) Divisional to Application Number :NA
Filing Date :NA

(71)**Name of Applicant :**
1)AGIOS PHARMACEUTICALS INC.
Address of Applicant :38 Sidney Street Cambridge Massachusetts 02139 U.S.A.
(72)**Name of Inventor :**
1)SALITURO Francesco G.
2)SAUNDERS Jeffrey O.
3)YAN Shunqi

(57) Abstract :
Compounds and compositions comprising compounds that modulate pyruvate kinase M2 (PKM2) are described herein. Also described herein are methods of using the compounds that modulate PKM2 in the treatment of cancer.

No. of Pages : 164 No. of Claims : 17

(12) PATENT APPLICATION PUBLICATION
(19) INDIA
(22) Date of filing of Application :24/07/2013
(21) Application No.6592/DELNP/2013 A
(43) Publication Date : 19/12/2014

(54) Title of the invention : VEGETABLE OIL BASED OIL IN WATER OR WATER IN OIL EMULSION AS PHYTOPHARMACEUTICAL ADJUVANT

(51) International classification	:A01N25/04,A01N25/08,A01N59/02
(31) Priority Document No	:11 51096
(32) Priority Date	:10/02/2011
(33) Name of priority country	:France
(86) International Application No	:PCT/FR2012/050281
Filing Date	:09/02/2012
(87) International Publication No	:WO 2012/168584
(61) Patent of Addition to Application Number	:NA
Filing Date	:NA
(62) Divisional to Application Number	:NA
Filing Date	:NA

(71)**Name of Applicant :**
1)MEXEL INDUSTRIES
Address of Applicant :Route de Compi¨gne F 60410 Verberie France
(72)**Name of Inventor :**
1)GERUSZ Roman
2)VANLAER Antoine

(57) Abstract :
The present invention relates to the use of a water in oil (w/o) or oil in water (o/w) emulsion composed of an oily phase comprising one or more oils of crude or refined vegetable origin and at least one non ionic and/or anionic emulsifying surfactant and of an aqueous phase the aqueous phase comprising at least one phyllosilicate as a phytopharmaceutical adjuvant intended to be mixed with at least one phytopharmaceutical active agent or as a phytopharmaceutical product with mechanical action. The present invention also relates to a phytopharmaceutical composition comprising an active agent and also a phytopharmaceutical adjuvant as defined above and also to the use of said composition.

No. of Pages : 47 No. of Claims : 18

(12) PATENT APPLICATION PUBLICATION
(19) INDIA
(22) Date of filing of Application :19/07/2013
(21) Application No.6483/DELNP/2013 A
(43) Publication Date : 19/12/2014

(54) Title of the invention : DRAWING BOARD APPARATUS

(51) International classification :B43L1/12
(31) Priority Document No :210284
(32) Priority Date :27/12/2010
(33) Name of priority country :Israel
(86) International Application No :PCT/IL2011/000935
Filing Date :12/12/2011
(87) International Publication No :WO 2012/090192
(61) Patent of Addition to Application Number :NA
Filing Date :NA
(62) Divisional to Application Number :NA
Filing Date :NA

(71)**Name of Applicant :**
1)MACHIACH Gidon
Address of Applicant :12 harzit st. 75431 Rishon Le Zion Israel
(72)**Name of Inventor :**
1)MACHIACH Gidon

(57) Abstract :
A drawing board apparatus is provided. The board includes a rigid board a multi color rotatable planar sheet overlying the rigid board. The drawing board further includes a masking member overlaying the multi color rotatable planar sheet including a masking layer of opaque material which flows under localized pressure of stylus or finger to expose the multi color rotatable planar sheet along areas in which the localized pressure is applied. The drawing board characterized in that the multi color planar sheet is rotated to permit different colors of the multi color rotatable planar sheet to be aligned along the areas in which the localized pressure is applied thereby permitting objects of different colors to be drawn.

No. of Pages : 16 No. of Claims : 6

(12) PATENT APPLICATION PUBLICATION
(19) INDIA
(22) Date of filing of Application :19/07/2013
(21) Application No.6484/DELNP/2013 A
(43) Publication Date : 19/12/2014

(54) Title of the invention : SYSTEM AND METHOD FOR ONLINE COMMUNICATIONS MANAGEMENT

(51) International classification :G06F9/46,G06F15/16
(31) Priority Document No :61/428712
(32) Priority Date :30/12/2010
(33) Name of priority country :U.S.A.
(86) International Application No :PCT/US2011/068089
Filing Date :30/12/2011
(87) International Publication No :WO 2012/092556
(61) Patent of Addition to Application Number :NA
Filing Date :NA
(62) Divisional to Application Number :NA
Filing Date :NA

(71)**Name of Applicant :**
1)KLEINBART Kyle
Address of Applicant :17040 Rancho Street Encino California 91316 U.S.A.
2)HANDEL Rory
3)TESSEL David
4)CHIU Sam
5)CRAMETZ Jean Pascal
(72)**Name of Inventor :**
1)KLEINBART Kyle
2)HANDEL Rory
3)TESSEL David
4)CHIU Sam
5)CRAMETZ Jean Pascal

(57) Abstract :
A system and method are disclosed. One or more processors prioritize at least some tasks and actions associated with a user. A to do list is provided that includes the prioritized task. First electronic data event information representing a sending or receiving of data associated with at least one of the tasks is received and at least one of the tasks and at least some of the actions are reprioritized. The to do list is modified based at least one the reprioritizing and is provided to the user.

No. of Pages : 82 No. of Claims : 20

(12) PATENT APPLICATION PUBLICATION
(19) INDIA
(22) Date of filing of Application :19/07/2013
(21) Application No.6485/DELNP/2013 A
(43) Publication Date : 19/12/2014

(54) Title of the invention : 9 [4 (3 CHLOR 2 FLUOR PHENYLAMINO) 7 METHOXY QUINAZOLIN 6 YLOXY] 1 4 DIAZA SPIRO[5.5]UNDECAN 5 ONE DIMALEATE USE THEREOF AS A DRUG AND PRODUCTION THEREOF

(51) International classification :C07D239/70,C07D403/12,A61K31/517
(31) Priority Document No :11152895.6
(32) Priority Date :01/02/2011
(33) Name of priority country :EPO
(86) International Application No :PCT/EP2012/051298
Filing Date :27/01/2012
(87) International Publication No :WO 2012/104206
(61) Patent of Addition to Application Number :NA
Filing Date :NA
(62) Divisional to Application Number :NA
Filing Date :NA

(71)**Name of Applicant :**
1)BOEHRINGER INGELHEIM INTERNATIONAL GMBH
Address of Applicant :Binger Strasse 173 55216 Ingelheim Am Rhein Germany
(72)**Name of Inventor :**
1)OSTERMEIER Markus
2)PFRENGLE Waldemar
3)HUCHLER Guenther
4)SIEGER Peter

(57) Abstract :
The invention relates to a compound of formula (I) which has valuable pharmacological properties in particular an inhibiting effect on the signal transduction mediated by tyrosine kinases to methods for stereoselectively producing said compounds in particular pharmaceutical formulations suitable for inhalation and to the use thereof to treat illnesses in particular tumor diseases benign prostatic hyperplasia and diseases of the lungs and respiratory tracts.

No. of Pages : 56 No. of Claims : 17

(12) PATENT APPLICATION PUBLICATION
(19) INDIA
(22) Date of filing of Application :19/07/2013
(21) Application No.6486/DELNP/2013 A
(43) Publication Date : 19/12/2014

(54) Title of the invention : 6 CYCLOBUTYL 1 5 DIHYDRO PYRAZOLO [3 4 D] PYRIMIDIN 4 ONE DERIVATIVES THEIR USE AS PDE9A INHIBITORS

(51) International classification :C07D487/04,A61K31/519,A61P25/28
(31) Priority Document No :11154397.1
(32) Priority Date :14/02/2011
(33) Name of priority country :EPO
(86) International Application No :PCT/EP2012/052378
Filing Date :13/02/2012
(87) International Publication No :WO 2012/110440
(61) Patent of Addition to Application Number :NA
Filing Date :NA
(62) Divisional to Application Number :NA
Filing Date :NA

(71)**Name of Applicant :**
1)BOEHRINGER INGELHEIM INTERNATIONAL GMBH
Address of Applicant :Binger Strae 173 55216 Ingelheim am Rhein Germany
(72)**Name of Inventor :**
1)HEINE Niklas
2)GIOVANNINI Riccardo
3)FERRARA Marco

(57) Abstract :
The invention relates to novel pyrazolopyrimidinones according to formula (I), wherein R1 is a pyridyl or pyrimidinyl group and D is optionally substituted cyclopentyl, cyclohexyl, tetrahydrofuranyl, tetrahydropyranyl or 2-, 3-or 4-pyridyl. The new compounds are for use as the active entity of medicaments or for the manu facture of medicaments respectively, in particular medicaments for the treatment of conditions con cerning deficits in perception, concentration, learning or memory. Such conditions may for ex ample be associated with Alzheimers disease, schizophrenia and other diseases. The new com pounds are also for example for the manufacture of medicaments and/or for use in the treatment of these diseases, in particular for cognitive impair ment associated with such disease. The com pounds of the invention show PDE9 inhibiting properties.

No. of Pages : 83 No. of Claims : 14

(12) PATENT APPLICATION PUBLICATION
(19) INDIA
(22) Date of filing of Application :24/07/2013
(21) Application No.6607/DELNP/2013 A
(43) Publication Date : 19/12/2014

(54) Title of the invention : ABRASIVE ARTICLE AND METHOD OF FORMING

(51) International classification :B24D3/20,C09K3/14,C09C1/68
(31) Priority Document No :61/428308
(32) Priority Date :30/12/2010
(33) Name of priority country :U.S.A.
(86) International Application No :PCT/US2011/068240
Filing Date :30/12/2011
(87) International Publication No :WO 2012/092614
(61) Patent of Addition to Application Number :NA
Filing Date :NA
(62) Divisional to Application Number :NA
Filing Date :NA

(71)**Name of Applicant :**
1)SAINT GOBAIN ABRASIVES INC.
Address of Applicant :One New Bond Street Worcester Massachusetts 01615 0138 U.S.A.
2)SAINT GOBAIN ABRASIFS
(72)**Name of Inventor :**
1)TIAN Yinggang
2)KHAUND Arup K.
3)SUBRAMANIAN Krishnamoorthy
4)PEARLMAN John

(57) Abstract :
An abrasive article having a substrate a tacking film overlying the substrate abrasive particles comprising a coating layer bonded to the tacking film such that a bond between the coating layer and the tacking film defines a metallic bonding region and a bonding layer overlying the abrasive particles and the tacking film.

No. of Pages : 41 No. of Claims : 104

(12) PATENT APPLICATION PUBLICATION
(19) INDIA
(22) Date of filing of Application :19/07/2013
(21) Application No.6492/DELNP/2013 A
(43) Publication Date : 19/12/2014

(54) Title of the invention : METHOD TO PREPARE FULL MONOLAYER OF PLATINUM ON PALLADIUM BASED CORE NANOPARTICLES

(51) International classification :B01J23/44,B01J35/08,B01J37/02
(31) Priority Document No :NA
(32) Priority Date :NA
(33) Name of priority country :NA
(86) International Application No :PCT/US2011/023585
Filing Date :03/02/2011
(87) International Publication No :WO 2012/105978
(61) Patent of Addition to Application Number :NA
Filing Date :NA
(62) Divisional to Application Number :NA
Filing Date :NA

(71)**Name of Applicant :**
1)UTC POWER CORPORATION
Address of Applicant :195 Governors HIghway South Windsor Connecticut 06074 U.S.A.
(72)**Name of Inventor :**
1)SHAO Minhua

(57) Abstract :
A method for forming catalytic nanoparticles includes forming core shell catalytic nanoparticles and processing the core shell catalytic nanoparticles. The core shell catalytic nanoparticles have a palladium core enclosed by a platinum shell. The core shell catalytic nanoparticles are processed to increase the percentage of the surface area of the core shell catalytic nanoparticles covered by the platinum shell.

No. of Pages : 23 No. of Claims : 22

(12) PATENT APPLICATION PUBLICATION
(19) INDIA
(22) Date of filing of Application :19/07/2013
(21) Application No.6495/DELNP/2013 A
(43) Publication Date : 19/12/2014

(54) Title of the invention : METHODS OF PREPARATION OF CONJUGATES

(51) International classification :A61K47/48,C07D487/04,C07D519/00
(31) Priority Document No :61/443062
(32) Priority Date :15/02/2011
(33) Name of priority country :U.S.A.
(86) International Application No :PCT/US2012/025257
Filing Date :15/02/2012
(87) International Publication No :WO 2012/112687
(61) Patent of Addition to Application Number :NA
Filing Date :NA
(62) Divisional to Application Number :NA
Filing Date :NA

(71)**Name of Applicant :**
1)IMMUNOGEN INC.
Address of Applicant :830 Winter Street Waltham MA 02451 U.S.A.
(72)**Name of Inventor :**
1)FISHKIN Nathan
2)MILLER Michael
3)LI Wei
4)SINGH Rajeeva

(57) Abstract :
The present invention is directed to methods of preparing a conjugate of a cell binding agent and a drug (such as a cytotoxic compound). The methods comprise the use of an imine reactive compound to enable efficient conjugations of cytotoxic compounds with cell binding agents.

No. of Pages : 254 No. of Claims : 171

(12) PATENT APPLICATION PUBLICATION
(19) INDIA
(22) Date of filing of Application :24/07/2013
(21) Application No.6600/DELNP/2013 A
(43) Publication Date : 19/12/2014

(54) Title of the invention : PIPE JOINT

(51) International classification :F16L21/08,F16L37/12
(31) Priority Document No :2011062383
(32) Priority Date :22/03/2011
(33) Name of priority country :Japan
(86) International Application No :PCT/JP2012/056583
Filing Date :14/03/2012
(87) International Publication No :WO 2012/128152
(61) Patent of Addition to Application Number :NA
Filing Date :NA
(62) Divisional to Application Number :NA
Filing Date :NA

(71)**Name of Applicant :**
1)INOUE SUDARE CO. LTD.
Address of Applicant :1014 1 Amano cho Kawachinagano shi Osaka 5860086 Japan
2)HIGASHIO MECH CO. LTD.
3)SEKISUI CHEMICAL CO. LTD.
(72)**Name of Inventor :**
1)INOUE Hiroshi
2)HAGINO Tomokazu
3)TAKAHASHI Kiyokazu
4)MASUI Katsuyuki

(57) Abstract :
In order to provide a pipe joint having sufficient pull out force a pipe joint is equipped with an annular pipe fastening unit (U) which has a two layer elastic configuration with a circular fastening body (5) as an inner layer that is used for C shaped clamping and as an outer layer with respect to the elastic fastening body (5) an additional outwardly fitted elastic body (10) which is used to reinforce the C shaped clamping force.

No. of Pages : 39 No. of Claims : 4

(12) PATENT APPLICATION PUBLICATION
(19) INDIA
(22) Date of filing of Application :24/07/2013
(21) Application No.6601/DELNP/2013 A
(43) Publication Date : 19/12/2014

(54) Title of the invention : CE CONTAINING V FREE MOBILE DENOX CATALYST

(51) International classification :B01J23/10
(31) Priority Document No :13/022325
(32) Priority Date :07/02/2011
(33) Name of priority country :U.S.A.
(86) International Application No :PCT/US2012/022502
Filing Date :25/01/2012
(87) International Publication No :WO 2012/109015
(61) Patent of Addition to Application Number :NA
Filing Date :NA
(62) Divisional to Application Number :NA
Filing Date :NA

(71)**Name of Applicant :**
1)CRISTAL USA INC.
Address of Applicant :6752 Baymeadow Drive Glen Burnie MD 21060 U.S.A.
(72)**Name of Inventor :**
1)AUGUSTINE Steven Mark
2)CHAPMAN David Monroe
3)WATSON Mark Barrett

(57) Abstract :
A catalyst for removal of NOx from exhaust gas containing cerium oxide and titanium dioxide wherein a first portion of the cerium oxide forms at least one agglomerate of cerium oxide crystallites interdispersed in the titanium dioxide and a second portion of the cerium oxide forms at least one island on a surface of the titanium dioxide a method for producing the catalyst a process for selectively reducing NOx levels in an exhaust gas using the catalyst and an SCR canister containing the catalyst therein.

No. of Pages : 53 No. of Claims : 40

(12) PATENT APPLICATION PUBLICATION
(19) INDIA
(22) Date of filing of Application :24/07/2013
(21) Application No.6602/DELNP/2013 A
(43) Publication Date : 19/12/2014

(54) Title of the invention : SALT COATED WITH NANOPARTICLES

(51) International classification :F25B17/08,B01D53/26,B01D53/28
(31) Priority Document No :11501905
(32) Priority Date :02/03/2011
(33) Name of priority country :Sweden
(86) International Application No :PCT/SE2012/050236
Filing Date :01/03/2012
(87) International Publication No :WO 2012/118437
(61) Patent of Addition to Application Number :NA
Filing Date :NA
(62) Divisional to Application Number :NA
Filing Date :NA

(71)**Name of Applicant :**
1)CLIMATEWELL AB (PUBL)
Address of Applicant :Instrumentvgen 20 S 126 53 Hgersten Sweden
(72)**Name of Inventor :**
1)BOLIN Gran
2)GLEBOV Dmitri

(57) Abstract :
A salt or CaO coated with hydrophobic nanoparticles comprises an inner part and an outer coating forming a particle with a permeable membrane keeping liquid inside and letting gas pass. Said inner part comprises at least one selected from a salt and CaO and said outer coating comprises hydrophobic nanoparticles. Known machines and processes can get enhanced functionality the particles comprising salt and nanoparticles. For machines working according to matrix and hybrid principles the particles can act as a matrix thereby substituting expensive matrix material. Further applications include storage of chemical energy.A device is adapted to perform an absorption process said device comprising at least one particle. Advantages include that corrosion is reduced or even eliminated. The long term stability of absorption machines is increased and migration of salt in liquid and gas phase is avoided.

No. of Pages : 37 No. of Claims : 29

(12) PATENT APPLICATION PUBLICATION
(19) INDIA
(22) Date of filing of Application :24/07/2013
(21) Application No.6605/DELNP/2013 A
(43) Publication Date : 19/12/2014

(54) Title of the invention : IMIDE CROSS LINKED BINDERS FOR ABRASIVE ARTICLES

(51) International classification :B24D3/24,C09K3/14,C09C1/68
(31) Priority Document No :61/428775
(32) Priority Date :30/12/2010
(33) Name of priority country :U.S.A.
(86) International Application No :PCT/US2011/068248
Filing Date :30/12/2011
(87) International Publication No :WO 2012/092618
(61) Patent of Addition to Application Number :NA
Filing Date :NA
(62) Divisional to Application Number :NA
Filing Date :NA

(71)**Name of Applicant :**
1)SAINT GOBAIN ABRASIVES INC.
Address of Applicant :One New Bond Street Worcester Massachusetts 01615 U.S.A.
2)SAINT GOBAIN ABRASIFS
(72)**Name of Inventor :**
1)HERBERT Charles G.

(57) Abstract :
An abrasive article includes a fibrous substrate a binder disposed on the fibrous substrate and abrasive grains in contact with the binder. The binder includes an imide cross linked urethane derived from a blocked isocyanate component and an anhydride component.

No. of Pages : 28 No. of Claims : 41

(12) PATENT APPLICATION PUBLICATION
(19) INDIA
(22) Date of filing of Application :19/07/2013
(21) Application No.6507/DELNP/2013 A
(43) Publication Date : 19/12/2014

(54) Title of the invention : SYSTEMS AND METHODS FOR DETECTING LEAKS

(51) International classification :G01M3/24
(31) Priority Document No :12/981728
(32) Priority Date :30/12/2010
(33) Name of priority country :U.S.A.
(86) International Application No :PCT/US2011/063724
Filing Date :07/12/2011
(87) International Publication No :WO 2012/091874
(61) Patent of Addition to Application Number :NA
Filing Date :NA
(62) Divisional to Application Number :NA
Filing Date :NA

(71)**Name of Applicant :**
1)SCHNEIDER ELECTRIC IT CORPORATION
Address of Applicant :132 Fairgrounds Road West Kingston RI 02892 U.S.A.
(72)**Name of Inventor :**
1)ROHR Daniel J.

(57) Abstract :
A system for detecting leaks on a surface such as a floor or a bottom of an equipment cabinet includes a sound wave generator configured to generate sound waves a tube having a first end coupled to the sound wave generator a second end opposite the first end and a plurality of openings formed in the tube and a sound wave receiver coupled to the second end of the tube. The sound wave receiver is configured to detect sound waves generated by the sound wave generator that travel through the tube. The arrangement is such that sound waves are blocked from detection by the sound wave receiver when fluid enters the tube through the plurality of openings in the tube thereby indicating a fluid leak on the surface.

No. of Pages : 16 No. of Claims : 18

(12) PATENT APPLICATION PUBLICATION
(19) INDIA
(22) Date of filing of Application :24/07/2013
(21) Application No.6621/DELNP/2013 A
(43) Publication Date : 19/12/2014

(54) Title of the invention : ELECTRONIC PRESSURE MEASURING AND RECORDING DEVICE

(51) International classification :B66F17/00,F15B15/16
(31) Priority Document No :2011/00962
(32) Priority Date :01/02/2011
(33) Name of priority country :Turkey
(86) International Application No :PCT/TR2011/000158
Filing Date :14/06/2011
(87) International Publication No :WO 2012/105917
(61) Patent of Addition to Application Number :NA
Filing Date :NA
(62) Divisional to Application Number :NA
Filing Date :NA

(71)**Name of Applicant :**
1)GALIPOGLU HIDROMAS HIDROLIK OTOMOTIV SANAYI VE TICARET ANONIM SIRKETI
Address of Applicant :2.Organize Sanayi Bolgesi Evrenkoy Cad. No:14 Konya Turkey
(72)**Name of Inventor :**
1)MERGENCI Engin
2)IZCI Recep
3)DUMANCI Kazim Burak

(57) Abstract :
The invention is an electronic data collection device (1) used to place under record the operating pressure and the numbers of opening and closing of telescopic cylinder (3) wherein a pump (6) transmits the hydraulic fluid found in a tank (7) to the telescopic cylinder (3) by means of the rotation drive shafted from the engine (5) on load carrying vehicles depending on the said fluid motion measuring through the pressure transmitter and the specially designed electronic card how many times the said telescopic cylinder has operated at what pressure value and recording these data; and an electronic pressure measuring and recording device (A) comprising information screen (2) displaying the information that is received from the electronic data collection device (1) and displays the information with regard to the telescopic cylinder (3) has operated under how much pressure and in which time intervals it has operated how many times it has exceeded the designated pressure threshold value.

No. of Pages : 10 No. of Claims : 2

(12) PATENT APPLICATION PUBLICATION
(19) INDIA
(22) Date of filing of Application :24/07/2013
(21) Application No.6622/DELNP/2013 A
(43) Publication Date : 19/12/2014

(54) Title of the invention : A FILTER GROUP FOR FLUIDS

(51) International classification :B01D53/22,B01D63/06
(31) Priority Document No :RE2011A000017
(32) Priority Date :25/03/2011
(33) Name of priority country :Italy
(86) International Application No :PCT/IB2012/000436
Filing Date :06/03/2012
(87) International Publication No :WO 2012/131453
(61) Patent of Addition to Application Number :NA
Filing Date :NA
(62) Divisional to Application Number :NA
Filing Date :NA

(71)**Name of Applicant :**
1)UFI INNOVATION CENTER S.R.L.
Address of Applicant :20 Viale Trento I 38061 Ala (TN) Italy
(72)**Name of Inventor :**
1)GIRONDI Giorgio

(57) Abstract :
A filter group (40) for fluids comprising an external casing (19) having any section suitable for receiving at least a filter membrane (16 18) which develops parallel to the axis of the casing (19) for dividing an internal volume of the casing (19) into two chambers (28 29) of which a first chamber (28) is in communication with an inlet conduit (12) for the fluid to be filtered and a second chamber (29) is in communication with an outlet conduit (14) of the filtered fluid. At least a pressure distributor element (45 46) is provided for each of the filter membranes and is accommodated in the first chamber (28) which at least a pressure distributor (45 46) axially separates the volume of the first chamber (28) into at least two parts the pressure distributor element being made of a material that is permeable to the flow of fluid to be filtered wherein the pressure distributor (45 46) for each of the filter membranes is located in an intermediate position on the respective membrane and is configured to increase the pressure differential on the upstream parts of the filter elements (16 18).

No. of Pages : 13 No. of Claims : 8

(12) PATENT APPLICATION PUBLICATION
(19) INDIA
(22) Date of filing of Application :24/07/2013
(21) Application No.6623/DELNP/2013 A
(43) Publication Date : 19/12/2014

(54) Title of the invention : METHOD FOR PRODUCING IRON POWDER FOR PROCESSING ORGANIC HALOGEN COMPOUNDS AND METHOD FOR PURIFYING CONTAMINATED SOIL OR GROUNDWATER

(51) International classification :B22F1/00,A62D3/34,A62D3/37
(31) Priority Document No :2011007318
(32) Priority Date :17/01/2011
(33) Name of priority country :Japan
(86) International Application No :PCT/JP2012/050795
Filing Date :17/01/2012
(87) International Publication No :WO 2012/099094
(61) Patent of Addition to Application Number :NA
Filing Date :NA
(62) Divisional to Application Number :NA
Filing Date :NA

(71)**Name of Applicant :**
1)DOWA ECO SYSTEM CO. LTD.
Address of Applicant :14 1 Sotokanda 4 chome Chiyoda ku Tokyo 1010021 Japan
(72)**Name of Inventor :**
1)UEHARA Taishi

(57) Abstract :
Provided is an iron powder which has an organic halogen compound processing performance equivalent to or higher than that of conventional organic halogen compound processing materials without containing a substance such as copper that places burden on the environment. Also provided is a method for producing an iron powder for processing organic halogen compounds which is characterized by comprising: a step wherein an iron powder is immersed in one or more solvents selected from among water and organic solvents that have lower vapor pressure than water and contain oxygen; a step wherein the iron powder immersed in the solvents is subjected to solid liquid separation thereby obtaining iron powder dampened with the solvents; and a step wherein the iron powder dampened with the solvents is dried while being maintained at a temperature less than 40°C.

No. of Pages : 49 No. of Claims : 8

(12) PATENT APPLICATION PUBLICATION
(19) INDIA
(22) Date of filing of Application :17/05/2013
(21) Application No.1478/DEL/2013 A
(43) Publication Date : 19/12/2014

(54) Title of the invention : A PROCESS FOR PREPARING ACTIVE BREATHABLE FILM FOR PACKAGING OF FOOD ARTICLES

(51) International classification :G08G
(31) Priority Document No :NA
(32) Priority Date :NA
(33) Name of priority country :NA
(86) International Application No :NA
Filing Date :NA
(87) International Publication No : NA
(61) Patent of Addition to Application Number :NA
Filing Date :NA
(62) Divisional to Application Number :NA
Filing Date :NA

(71)**Name of Applicant :**
1)DIRECTOR GENERAL, DEFENCE RESEARCH AND DEVELOPMENT ORGANIZATION
Address of Applicant :MINISTRY OF DEFENCE, GOVT. OF INDIA, ROOM NO 348 B-WING, DRDO BHAWAN, RAJAJI MARG, NEW DELHI-110011 Delhi India
(72)**Name of Inventor :**
1)RAMAKRISHNA, ALAPPA
2)NANJAPPA, SHIVASHANKAR
3)BAWA, AMRINDER SINGH

(57) Abstract :
The present invention provides for the process for preparing active breathable film for packaging of food articles. The process includes melting emulsification of food grade rubber with biopolymer constituents in proportion with distilled water, centrifuging melted emulsion, liquid silicone components, and antimicrobial silver ions in an inert nitrogen gas atmosphere, uniformly mixing the emulsion with polypropylene, preparing fiber webs from the mixture obtained, and employing thermal bonding process on the fiber webs to produce the continuous active breathable film. The cost-effective and eco-friendly packages are prepared from active breathable film for containing food articles. The said packaging extends the shelf life of food article by protecting the same from microbial contamination.

No. of Pages : 15 No. of Claims : 10

(12) PATENT APPLICATION PUBLICATION
(19) INDIA
(22) Date of filing of Application :24/07/2013
(21) Application No.6619/DELNP/2013 A
(43) Publication Date : 19/12/2014

(54) Title of the invention : ARRANGEMENT CONSISTING OF A TRAVELLING GEAR CARRIER AND A RUNNING WHEEL BLOCK FASTENED DETACHABLY THERETO AND INSTALLATION METHOD THEREFOR

(51) International classification :B66C9/08
(31) Priority Document No :10 2011 002 044.6
(32) Priority Date :14/04/2011
(33) Name of priority country :Germany
(86) International Application No :PCT/EP2012/056681
Filing Date :12/04/2012
(87) International Publication No :WO 2012/140143
(61) Patent of Addition to Application Number :NA
Filing Date :NA
(62) Divisional to Application Number :NA
Filing Date :NA

(71)**Name of Applicant :**
1)DEMAG CRANES & COMPONENTS GMBH
Address of Applicant :Ruhrstr. 28 58300 Wetter Germany
(72)**Name of Inventor :**
1)SCHLIERBACH KNOBLOCH Thomas
2)KREISNER Richard
3)JANSEN Gregor

(57) Abstract :
The invention relates to an arrangement consisting of a travelling gear carrier (5) and a running wheel block (6) fastened detachably thereto wherein the running wheel block (6) consists of a housing (7) with at least one connection surface (8) and a running wheel (11) which is mounted in the housing (7) and protrudes out of the housing (7) and the running wheel block (6) is aligned with respect to the travelling gear carrier (5). In order to facilitate the exchange of running wheel blocks it is proposed that an undertaken alignment of the running wheel block (6) with respect to the travelling gear carrier (5) is secured in such a manner that a machined groove (10) in which a machined plate (14) is held in a form fitting manner is arranged on the connection surface (8) of the running wheel block (6) and after the running wheel block (6) has been aligned with respect to the travelling gear carrier (5) the plate (14) is fixedly connected to the travelling gear carrier (5). The invention also relates to a method for the installation of an arrangement consisting of a travelling gear carrier (5) and a running wheel block (6).

No. of Pages : 17 No. of Claims : 11

(12) PATENT APPLICATION PUBLICATION
(19) INDIA
(22) Date of filing of Application :24/07/2013
(21) Application No.6620/DELNP/2013 A
(43) Publication Date : 19/12/2014

(54) Title of the invention : HIGH REBAUDIOSIDE A PLANT AND METHODS OF PRODUCING THE SAME AND USES THEREOF

(51) International classification :A01H1/04,A01H1/02,A01H5/00
(31) Priority Document No :201010618515.x
(32) Priority Date :31/12/2010
(33) Name of priority country :China
(86) International Application No :PCT/CA2012/000010
Filing Date :03/01/2012
(87) International Publication No:WO 2012/088612
(61) Patent of Addition to Application Number :NA
Filing Date :NA
(62) Divisional to Application Number :NA
Filing Date :NA

(71)**Name of Applicant :**
1)GLG LIFE TECH CORPORATION
Address of Applicant :Suite 2168 1050 West Pender Street Vancouver BC V6E 3S7 Canada
(72)**Name of Inventor :**
1)WANG Qibin

(57) Abstract :
A method for breeding with a high content of RA comprises selecting the plants in the perfect stage with a high RA content as parents and hybridizing them to produce F generation seeds; stabilizing the traits of the F generation in the imperfect stage; producing F generation seeds by a backcross method and optionally producing F3 generation seeds by a further backcross method.

No. of Pages : 44 No. of Claims : 17

(12) PATENT APPLICATION PUBLICATION
(19) INDIA
(22) Date of filing of Application :24/07/2013

(21) Application No.6624/DELNP/2013 A
(43) Publication Date : 19/12/2014

(54) Title of the invention : GASIFICATION REACTOR

(51) International classification :C10J3/78,C10J3/48,C10J3/76
(31) Priority Document No :11155846.6
(32) Priority Date :24/02/2011
(33) Name of priority country :EPO
(86) International Application No :PCT/EP2012/052975
Filing Date :22/02/2012
(87) International Publication No :WO 2012/113811
(61) Patent of Addition to Application Number :NA
Filing Date :NA
(62) Divisional to Application Number :NA
Filing Date :NA

(71)**Name of Applicant :**
1)SHELL INTERNATIONALE RESEARCH MAATSCHAPPIJ B.V.
Address of Applicant :Carel van Bylandtlaan 30 NL 2596 HR The Hague Netherlands
(72)**Name of Inventor :**
1)KAR Ibrahim
2)SCHMITZ GOEB Manfred Heinrich

(57) Abstract :
A gasification reactor (1) comprising a pressure vessel (2) encasing a gasifier (3). Strain gauges (21) are provided in the space between the gasifier and the pressure vessel on one or more parts loaded by weight of slag within the gasifier e.g. at the exterior surface of the gasifier wall and/or coolant supply lines. Formation of slag deposits (18) and/or pressure within the gasifier (3) is monitored by measuring strain development in parts exposed to stress induced by weight of the slag deposits or induced by internal pressure respectively.

No. of Pages : 13 No. of Claims : 10

(12) PATENT APPLICATION PUBLICATION
(19) INDIA
(22) Date of filing of Application :24/07/2013
(21) Application No.6625/DELNP/2013 A
(43) Publication Date : 19/12/2014

(54) Title of the invention : DISPOSITION STRUCTURE OF COMPRESSOR FOR AIR CONDITIONER IN HYBRID VEHICLE

(51) International classification :B60H1/32,B60K6/22,B60K6/40
(31) Priority Document No :NA
(32) Priority Date :NA
(33) Name of priority country :NA
(86) International Application No:PCT/JP2011/053722
Filing Date :21/02/2011
(87) International Publication No :WO 2012/114438
(61) Patent of Addition to Application Number :NA
Filing Date :NA
(62) Divisional to Application Number :NA
Filing Date :NA

(71)**Name of Applicant :**
1)SUZUKI MOTOR CORPORATION
Address of Applicant :300 Takatsuka Cho Minami Ku Hamamatsu Shi Shizuoka 4328611 Japan
(72)**Name of Inventor :**
1)MOCHIZUKI Yoshihito

(57) Abstract :
In this hybrid vehicle an engine a motor for power generation a motor for driving and a compressor for an air conditioner are provided in an engine room and the engine and the motor for power generation are disposed in series and the compressor is disposed and fixed on the side portion of the motor for driving. Furthermore the motor for power generation and the motor for driving are disposed in parallel in the front rear direction of the vehicle the motor for power generation and the motor for driving are housed in different motor cases respectively and the compressor is fixed to the side portion of one of the motor cases. Furthermore the one motor case having the compressor fixed thereto may be disposed at a position higher than the other motor case said position being at the rear of the other motor case.

No. of Pages : 25 No. of Claims : 5

(12) PATENT APPLICATION PUBLICATION
(19) INDIA
(22) Date of filing of Application :24/07/2013
(21) Application No.6626/DELNP/2013 A
(43) Publication Date : 19/12/2014

(54) Title of the invention : 4 (3 BUTYNYL)AMINOPYRIMIDINE DERIVATIVE CONTAINING PEST CONTROL COMPOSITION FOR AGRICULTURAL OR HORTICULTURAL USE

(51) International classification	:A01N43/54,A01N37/18,A01N37/34
(31) Priority Document No	:2011006485
(32) Priority Date	:14/01/2011
(33) Name of priority country	:Japan
(86) International Application No	:PCT/JP2011/080219
Filing Date	:27/12/2011
(87) International Publication No	:WO 2012/096129
(61) Patent of Addition to Application Number	:NA
Filing Date	:NA
(62) Divisional to Application Number	:NA
Filing Date	:NA

(71)**Name of Applicant :**
1)SDS BIOTECH K. K.
Address of Applicant :1 5 Higashi Nihombashi 1 chome Chuo ku Tokyo 1030004 Japan
(72)**Name of Inventor :**
1)SAKAI Masaaki
2)MATSUMURA Tomoaki
3)MIDORIKAWA Satohiro
4)NOMOTO Takashi
5)MURAKI Tomoko
6)KATSUKI Ryutaro

(57) Abstract :
A pest control composition for agricultural or horticultural use characterized by comprising as the active ingredients one or more kinds of 4 (3 butynyl)aminopyrimidine derivatives represented by general formula [I] [wherein for example R is selected from among phenyl a hydrogen atom etc.; R represents a hydrogen atom; R represents a hydrogen atom; and R represents a hydrogen atom] said derivatives having excellent controlling effect on pests in particular agricultural or horticultural pests together with one or more kinds of pest control compounds for agricultural or horticultural use selected from among a bactericidal compound for agricultural or horticultural use a biological bactericide and/or an insecticidal/acaricidal/nematicidal compound for agricultural or horticultural use. By the combined use of the aforesaid derivative with a conventional compound having bactericidal activity and/or a conventional compound having insecticidal activity the usage of a pest control in particular a 4 (3 butynyl)aminopyrimidine derivative that is useful as a pest control for agricultural or horticultural use can be reduced and the bactericidal activity or insecticidal activity can be enhanced.

No. of Pages : 177 No. of Claims : 7

(12) PATENT APPLICATION PUBLICATION
(19) INDIA
(22) Date of filing of Application :24/07/2013
(21) Application No.6627/DELNP/2013 A
(43) Publication Date : 19/12/2014

(54) Title of the invention : USE OF A VISCOELASTIC FLUID FOR PRODUCING A MEDICINAL PRODUCT FOR SURGICALLY TREATING THE EYE

(51) International classification :A61K9/08,A61K47/36,A61K47/38
(31) Priority Document No :A 288/2011
(32) Priority Date :03/03/2011
(33) Name of priority country :Austria
(86) International Application No :PCT/EP2012/053710
Filing Date :05/03/2012
(87) International Publication No :WO 2012/117115
(61) Patent of Addition to Application Number :NA
Filing Date :NA
(62) Divisional to Application Number :NA
Filing Date :NA

(71)**Name of Applicant :**
1)CROMA PHARMA GMBH
Address of Applicant :Industriezeile 15 A 2100 Leobendorf Austria
(72)**Name of Inventor :**
1)FINDL Oliver

(57) Abstract :
The invention relates to the use of an aqueous viscoelastic fluids for producing a medicinal product for surgically treating the eye said fluid enlarging the crystalline lens and pupil of the eye after being applied to the eye surface from a disposable container. Said viscoelastic fluid contains a polymer selected from the group consisting of hydroxypropyl methylcellulose carboxymethyl cellulose hydroxyethylcellulose hyaluronic acid sodium alginate hydroxylpropyl guar polyvinylpyrrolidone polyvinyl alcohol polymethacrylic acid (carbomer) polyoxyethylene polyoxypropylene copolymer (poloxamer) and polyethylene glycol in a concentration of between 0 01 30%.

No. of Pages : 9 No. of Claims : 1

(12) PATENT APPLICATION PUBLICATION
(19) INDIA
(22) Date of filing of Application :23/07/2013
(21) Application No.6577/DELNP/2013 A
(43) Publication Date : 19/12/2014

(54) Title of the invention : EFFERVESCENT GAMMA HYDROXYBUTYRIC ACID GRANULES

(51) International classification :A61K9/50,A61K31/19,A61K9/00
(31) Priority Document No :11/00433
(32) Priority Date :11/02/2011
(33) Name of priority country :France
(86) International Application No :PCT/FR2012/000046
Filing Date :03/02/2012
(87) International Publication No :WO 2012/107652
(61) Patent of Addition to Application Number :NA
Filing Date :NA
(62) Divisional to Application Number :NA
Filing Date :NA

(71)**Name of Applicant :**
1)DEBREGEAS ET ASSOCIES PHARMA
Address of Applicant :79 rue de Miromesnil F 75008 Paris France
(72)**Name of Inventor :**
1)SUPLIE Pascal
2)LECOUSTEY Sylvie

(57) Abstract :
The present invention relates to a granule including a solid core on which an active principle supported said active principle being selected from among gamma hydroxybutyric acid or one of the pharmaceutically acceptable salts thereof said granule further including one or more compounds which are supported on said solid core and which are capable of releasing gas and one or more diluents said granule being characterized in that it is coated with a membrane and in that the solid core is 15 to 50 wt % with respect to the total weight of the granule.

No. of Pages : 36 No. of Claims : 14

(12) PATENT APPLICATION PUBLICATION
(19) INDIA
(22) Date of filing of Application :23/07/2013
(21) Application No.6578/DELNP/2013 A
(43) Publication Date : 19/12/2014

(54) Title of the invention : GLUCAGON RECEPTOR MODULATOR

(51) International classification	:C07D207/34,C07D231/12,C07D231/14
(31) Priority Document No	:61/440578
(32) Priority Date	:08/02/2011
(33) Name of priority country	:U.S.A.
(86) International Application No	:PCT/IB2012/050349
Filing Date	:25/01/2012
(87) International Publication No	:WO 2012/107850
(61) Patent of Addition to Application Number	:NA
Filing Date	:NA
(62) Divisional to Application Number	:NA
Filing Date	:NA

(71)**Name of Applicant :**
1)PFIZER INC.
Address of Applicant :235 East 42nd Street New York New York 10017 U.S.A.
(72)**Name of Inventor :**
1)ASPNES Gary Erik
2)DIDIUK Mary Theresa
3)FILIPSKI Kevin James
4)GUZMAN PEREZ Angel
5)LEE Esther Cheng Yin
6)PFEFFERKORN Jeffrey Allen
7)STEVENS Benjamin Dawson
8)TU Meihua Mike

(57) Abstract :
The present invention provides a compound of Formula (I) or a pharmaceutically acceptable salt thereof wherein R1 R2 R3 A1 A2 A3 A4 L B1 B2 B3 and B4 are as defined herein. The compounds of Formula I have been found to act as glucagon antagonists or inverse agonists. Consequently the compounds of Formula I and the pharmaceutical compositions thereof are useful for the treatment of diseases disorders or conditions mediated by glucagon.

No. of Pages : 300 No. of Claims : 20

(12) PATENT APPLICATION PUBLICATION
(19) INDIA
(22) Date of filing of Application :06/09/2013
(21) Application No.7830/DELNP/2013 A
(43) Publication Date : 19/12/2014

(54) Title of the invention : AQUEOUS SOLUTION AND METHOD FOR THE FORMATION OF A PASSIVATION LAYER

(51) International classification :C23C22/53,C23C22/34,C25D5/48
(31) Priority Document No :11155672.6
(32) Priority Date :23/02/2011
(33) Name of priority country :EPO
(86) International Application No :PCT/US2012/026343
Filing Date :23/02/2012
(87) International Publication No :WO 2012/116195
(61) Patent of Addition to Application Number :NA
Filing Date :NA
(62) Divisional to Application Number :NA
Filing Date :NA

(71)**Name of Applicant :**
1)ENTHONE INC
Address of Applicant :350 Frontage Road West Haven Connecticut 06516 U.S.A.
(72)**Name of Inventor :**
1)VAN SCHAIK Rene
2)ZONE Keith Richard

(57) Abstract :
The present invention generally relates to an aqueous solution for the formation of a passivation layer on a zinc layer or zinc alloy layer. More particularly the invention relates to the formation of a black passivation layer on a zinc layer or zinc alloy layer which passivation layer is substantially free of hexavalent chromium. Furthermore the present invention relates to method for the formation of a passivation layer on a zinc layer or zinc alloy layer as well as a passivation layer on a zinc layer or zinc alloy layer itself. The solution used contains trivalent chromium ions nitrate ions an organic acid and a dithioglycolate.

No. of Pages : 16 No. of Claims : 17

(12) PATENT APPLICATION PUBLICATION
(19) INDIA
(22) Date of filing of Application :06/09/2013
(21) Application No.7831/DELNP/2013 A
(43) Publication Date : 19/12/2014

(54) Title of the invention : METHOD FOR PRODUCING A GRAIN ORIENTED ELECTRICAL STEEL STRIP OR SHEET INTENDED FOR ELECTROTECHNICAL APPLICATIONS

(51) International classification :C21D8/02,C22C38/02,C22C38/04
(31) Priority Document No :10 2011 054 004.0
(32) Priority Date :28/09/2011
(33) Name of priority country :Germany
(86) International Application No :PCT/EP2012/068525
Filing Date :20/09/2012
(87) International Publication No :WO 2013/045339
(61) Patent of Addition to Application Number :NA
Filing Date :NA
(62) Divisional to Application Number :NA
Filing Date :NA

(71)**Name of Applicant :**
1)THYSSENKRUPP STEEL EUROPE AG
Address of Applicant :Kaiser Wilhelm Strae 100 47166 Duisburg Germany
2)THYSSENKRUPP ELECTRICAL STEEL GMBH
(72)**Name of Inventor :**
1)B–TTCHER Andreas
2)LAHN Ludger
3)INDEN Gerhard
4)SOWKA Eberhard

(57) Abstract :
The invention relates to a method for producing a. grainoriented electrical steel strip or sheet, in which the slab temperature of a thin slab, which consists of a steel having (in % wt.) Si: 2 - 6.5 %, C: 0.02 - 0.15 %, S: 0.01 - 0.1 %, Cu: 0.1 - 0.5 %, wherein the Cu to S content ratio is %Cu/%S > 4, Mn: up to 0.1 %, wherein the Mn to S content ratio is %Mn/%S < 2.5, and optional contents of N, Al, Ni, Cr, Mo, Sn, V, Nb, is homogenised to 1000 - 1200 °C, in which the thin slab is hot rolled into a hot strip having a thickness of 0.5 - 4.0 mm at an initial hot-rolling temperature of <= 1030 °C and a final hot7rolling temperature of >= 710 °C and with a thickness reduction both in the first and in the second hot-forming passes of >= 40 % in each case, the hot strip is cooled and coiled into a coil, in which the hot strip is cold rolled into a cold strip having a final thickness of 0.15 - 0.50 mm, in which an annealing separator is applied onto the annealed cold strip, and in which final annealing of the cold strip provided with the annealing separator is carried out to form a Goss texture.

No. of Pages : 35 No. of Claims : 15

(12) PATENT APPLICATION PUBLICATION
(19) INDIA
(22) Date of filing of Application :06/09/2013
(21) Application No.7832/DELNP/2013 A
(43) Publication Date : 19/12/2014

(54) Title of the invention : RECLINING DEVICE

(51) International classification :A47C1/024
(31) Priority Document No :2011069622
(32) Priority Date :28/03/2011
(33) Name of priority country :Japan
(86) International Application No :PCT/JP2012/052616
Filing Date :06/02/2012
(87) International Publication No :WO 2012/132552
(61) Patent of Addition to Application Number :NA
Filing Date :NA
(62) Divisional to Application Number :NA
Filing Date :NA

(71)**Name of Applicant :**
1)SHIROKI CORPORATION
Address of Applicant :2 Kirihara cho Fujisawa shi Kanagawa 2520811 Japan
(72)**Name of Inventor :**
1)ITO Koji

(57) Abstract :
The present invention addresses the problem of providing a reclining device in which a pawl moves smoothly, does not slip and locks well. 5 [Solution] A cam part that moves a pawl (33) in the direction of a locked position is configured from a rotating cam (first cam) (31) that pushes the pawl (33) in the direction of the locked position and a cam (second cam) (34) that is pressed by the rotating cam (31) and pushes the pawl (33) in the direction of the locked position while pressing same against a guide (25c). The cam part is configured so that when 10 the pawl (33) located at the unlocked position moves to the locked position, the cam part initially presses the pawl (33) with the rotating cam (31), and when the pawl (33) is at the locked position, presses the pawl (33) with the cam (34). 17

No. of Pages : 27 No. of Claims : 4

(12) PATENT APPLICATION PUBLICATION
(19) INDIA
(22) Date of filing of Application :06/09/2013
(21) Application No.7833/DELNP/2013 A
(43) Publication Date : 19/12/2014

(54) Title of the invention : COMPRESSION METHOD AND AIR SEPARATION

(51) International classification :F25J3/04,F04B49/06
(31) Priority Document No :13/087734
(32) Priority Date :15/04/2011
(33) Name of priority country :U.S.A.
(86) International Application No :PCT/US2012/031211
Filing Date :29/03/2012
(87) International Publication No :WO 2012/141912
(61) Patent of Addition to Application Number :NA
Filing Date :NA
(62) Divisional to Application Number :NA
Filing Date :NA

(71)**Name of Applicant :**
1)PRAXAIR TECHNOLOGY INC.
Address of Applicant :39 Old Ridgebury Road Danbury CT 06810 U.S.A.
(72)**Name of Inventor :**
1)DeMORE Daniel D.
2)BAKER Robert L.
3)ROYAL John H.

(57) Abstract :
A compression method a multistage compression system and an air separation method and plant in which a gas is compressed in a series of compression stages to produce a compressed gas and each of the compression stages incorporate a variable speed compressor. In such compression method and system the compressed air is produced at a pressure that remains stable during both normal operational conditions and during turn down conditions during which the flow rate of the gas is reduced. This reduction is accomplished by reducing the speed of the compressor in an initial compression stage such that the compressor operates at a point along its peak efficiency operating line at which the pressure ratio is directly proportional to the flow rate and such that the lower turn down flow rate is obtained at a reduced pressure which is made up in successive compression stages.

No. of Pages : 45 No. of Claims : 20

(12) PATENT APPLICATION PUBLICATION
(19) INDIA
(22) Date of filing of Application :06/09/2013
(21) Application No.7834/DELNP/2013 A
(43) Publication Date : 19/12/2014

(54) Title of the invention : HYDROCARBON FUEL PRODUCTION METHOD

(51) International classification :C10G3/00,C10G21/14,C10G45/08
(31) Priority Document No :2011049282
(32) Priority Date :07/03/2011
(33) Name of priority country :Japan
(86) International Application No :PCT/JP2012/051126
Filing Date :19/01/2012
(87) International Publication No :WO 2012/120926
(61) Patent of Addition to Application Number :NA
Filing Date :NA
(62) Divisional to Application Number :NA
Filing Date :NA

(71)**Name of Applicant :**
1)JX Nippon Oil & Energy Corporation
Address of Applicant :6 3 Otemachi 2 chome Chiyoda ku Tokyo 1008162 Japan
2)National University Corporation Nagoya University
(72)**Name of Inventor :**
1)HORIZOE Hirotoshi
2)AOKI Nobuo
3)UEDA Iwao

(57) Abstract :
The present invention provides a method for producing a hydrocarbon fuel, comprising a first step of holding a mixture 5 containing an aliphatic compound produced by algae, and a hydrocarbon solvent in which critical temperature is 90°C or higher, in a supercritical state, with temperature and pressure adjusted so that a solubility of the aliphatic compound in the hydrocarbon solvent is 15 g or less per 100 g of the hydrocarbon solvent, and then recovering a 10 soluble portion of the aliphatic compound in the hydrocarbon solvent; and a second step of subjecting the soluble portion recovered in the first step to hydrotreatment using a catalyst.

No. of Pages : 41 No. of Claims : 1

(12) PATENT APPLICATION PUBLICATION
(19) INDIA
(22) Date of filing of Application :06/09/2013
(21) Application No.7835/DELNP/2013 A
(43) Publication Date : 19/12/2014

(54) Title of the invention : FLAT SUTURE ANCHOR

(51) International classification :A61B17/04
(31) Priority Document No :13/072384
(32) Priority Date :25/03/2011
(33) Name of priority country :U.S.A.
(86) International Application No :PCT/US2012/030142
Filing Date :22/03/2012
(87) International Publication No :WO 2012/134955
(61) Patent of Addition to Application Number :NA
Filing Date :NA
(62) Divisional to Application Number :NA
Filing Date :NA

(71)**Name of Applicant :**
1)SMITH & NEPHEW INC.
Address of Applicant :1450 Brooks Road Memphis Tennessee 38116 U.S.A.
(72)**Name of Inventor :**
1)LUNN Richard M.
2)PAULK David A.
3)SALVAS Paul L.

(57) Abstract :
A suture anchor for anchoring a suture to a bone including a distal end having a bifurcated tip in which the bifurcated tip defines a suture engaging slot a proximal end a longitudinal axis between the distal end and the proximal end and two substantially flat surfaces extending between the distal end and the proximal end in which the two substantially flat surfaces are substantially parallel in which the two substantially flat surfaces are separated by a thickness of no more than about 0.1 inches and in which the two substantially flat surfaces extend along an axis perpendicular to the longitudianl axis by a width of no more than about 0.4 inches.

No. of Pages : 29 No. of Claims : 32

(12) PATENT APPLICATION PUBLICATION
(19) INDIA
(22) Date of filing of Application :06/09/2013
(21) Application No.7836/DELNP/2013 A
(43) Publication Date : 19/12/2014

(54) Title of the invention : SYSTEMS AND METHODS OF CONTROLLING FLOW OF BODILY FLUIDS

(51) International classification :A61M5/00
(31) Priority Document No :61/451894
(32) Priority Date :11/03/2011
(33) Name of priority country :U.S.A.
(86) International Application No :PCT/US2012/028453
Filing Date :09/03/2012
(87) International Publication No :WO 2012/125449
(61) Patent of Addition to Application Number :NA
Filing Date :NA
(62) Divisional to Application Number :NA
Filing Date :NA

(71)**Name of Applicant :**
1)SEAVER Chad
Address of Applicant :7526 Willowcreek Pointe Ln Knoxville TN 37931 U.S.A.
2)ARNOTT Chris
3)KILLEFFER James Alexander
(72)**Name of Inventor :**
1)SEAVER Chad
2)ARNOTT Chris
3)KILLEFFER James Alexander

(57) Abstract :
Systems and methods to regulate flow of bodily fluids such as cerebrospinal fluid (CSF) including a fluid chamber an inlet port to receive the bodily fluid into the fluid chamber an outlet port to remove the bodily fluid from the chamber and a pressure element to regulate the amount of fluid flowing from the inlet port to the outlet port based on a pressure of the bodily fluid against an absolute pressure reference.

No. of Pages : 30 No. of Claims : 20

(12) PATENT APPLICATION PUBLICATION
(19) INDIA
(22) Date of filing of Application :06/09/2013
(21) Application No.7837/DELNP/2013 A
(43) Publication Date : 19/12/2014

(54) Title of the invention : METHOD OF DYEING POLYESTER

(51) International classification :D06P1/16,D06P1/18,D06P1/64
(31) Priority Document No :11163130.5
(32) Priority Date :20/04/2011
(33) Name of priority country :EPO
(86) International Application No :PCT/EP2012/053882
Filing Date :07/03/2012
(87) International Publication No :WO 2012/143167
(61) Patent of Addition to Application Number :NA
Filing Date :NA
(62) Divisional to Application Number :NA
Filing Date :NA

(71)**Name of Applicant :**
1)HUNTSMAN ADVANCED MATERIALS (SWITZERLAND) GMBH
Address of Applicant :Legal Services Department Klybeckstrasse 200 CH 4057 Basel Switzerland
(72)**Name of Inventor :**
1)SCHEIBLI Peter
2)SPERISSEN Gilles
3)BIANCO Marisa

(57) Abstract :
The present invention relates to a method of dyeing polyester containing textile material characterised in that the textile material is treated with a liquor containing (a) at least one disperse dye and (b) at least one compound of the formula (1) wherein G and G independently of one another are C Calkyl or together are pentamethylene Z and Z are methyl r and Z together form a bridging member which is unsubstituted or substituted by an ester ether hydroxyl oxo cyanohydrin amido amino carboxyl or urethane radical and E is oxyl or hydroxyl.

No. of Pages : 16 No. of Claims : 9

(12) PATENT APPLICATION PUBLICATION
(19) INDIA
(22) Date of filing of Application :22/07/2013
(21) Application No.6549/DELNP/2013 A
(43) Publication Date : 19/12/2014

(54) Title of the invention : PROCESS FOR INCREASING BENZENE AND TOLUENE PRODUCTION

(51) International classification :C10G61/02,C10G59/02,C10G35/04
(31) Priority Document No :61/480765
(32) Priority Date :29/04/2011
(33) Name of priority country :U.S.A.
(86) International Application No :PCT/US2012/034463
Filing Date :20/04/2012
(87) International Publication No :WO 2012/148813
(61) Patent of Addition to Application Number :NA
Filing Date :NA
(62) Divisional to Application Number :NA
Filing Date :NA

(71)**Name of Applicant :**
1)UOP LLC
Address of Applicant :25 East Algonquin Road P.O. Box 5017 Des Plaines Illinois 60017 5017 U.S.A.
(72)**Name of Inventor :**
1)SERBAN Manuela
2)NEGIZ Antoine
3)VANDEN BUSSCHE Kurt M.

(57) Abstract :
A process for reforming a hydrocarbon stream is presented. The process involves splitting a naphtha feedstream to at least two feedstreams and passing each feedstream to separation reformers. The reformers are operated under different conditions to utilize the differences in the reaction properties of the different hydrocarbon components. The process utilizes a common catalyst and common downstream processes for recovering the desired aromatic compounds generated.

No. of Pages : 19 No. of Claims : 10

(12) PATENT APPLICATION PUBLICATION
(19) INDIA
(22) Date of filing of Application :22/07/2013
(21) Application No.6550/DELNP/2013 A
(43) Publication Date : 19/12/2014

(54) Title of the invention : ALIGNING AND FOCUSING AN ELECTRON BEAM IN AN X RAY SOURCE

(51) International classification :H01J35/14,H01J35/08
(31) Priority Document No :10513695
(32) Priority Date :22/12/2010
(33) Name of priority country :Sweden
(86) International Application No :PCT/SE2011/051557
Filing Date :21/12/2011
(87) International Publication No :WO 2012/087238
(61) Patent of Addition to Application Number :NA
Filing Date :NA
(62) Divisional to Application Number :NA
Filing Date :NA

(71)**Name of Applicant :**
1)EXCILLUM AB
Address of Applicant :Finlandsgatan 14 S 164 74 Kista Sweden
(72)**Name of Inventor :**
1)SUNDMAN Bjrn
2)TUOHIMAA Tomi
3)HEMBERG Oscar

(57) Abstract :
The invention provides a technique for indirectly measuring the degree of alignment of a beam in an electron optical system comprising aligning means focusing means and deflection means. To carry out the measurements a simple sensor may be used even a single element sensor provided it has a well defined spatial extent. When practised in connection with an X ray source which is operable to produce an X ray target the invention further proposes a technique for determining and controlling a width of an electron beam at its intersection point with the target.

No. of Pages : 44 No. of Claims : 24

(12) PATENT APPLICATION PUBLICATION
(19) INDIA
(22) Date of filing of Application :22/07/2013
(21) Application No.6551/DELNP/2013 A
(43) Publication Date : 19/12/2014

(54) Title of the invention : IMPROVED SAFE AND CONVENIENT DISPOSABLE AUTOMATIC BLOOD COLLECTION NEEDLE

(51) International classification :A61B5/151
(31) Priority Document No :201010596791.0
(32) Priority Date :21/12/2010
(33) Name of priority country :China
(86) International Application No :PCT/CN2011/077538
Filing Date :25/07/2011
(87) International Publication No :WO 2012/083690
(61) Patent of Addition to Application Number :NA
Filing Date :NA
(62) Divisional to Application Number :NA
Filing Date :NA

(71)**Name of Applicant :**
1)STERILANCE MEDICAL (SUZHOU) INC.
Address of Applicant :No. 68 Litanghe Rd. Xiangcheng Suzhou Jiangsu 215133 China
(72)**Name of Inventor :**
1)SHI Guoping

(57) Abstract :
An improved safe and convenient disposable automatic blood collection needle comprises a housing (1) a needle core (2) a spring (3) and a protective rod (4) and is characterized in that: a press arm of a triggering button (10) is partitioned into a first press pin (11) and a second press pin (19); the first press pin (11) is used for triggering an elastic arm in a locking structure to form a press type triggering structure; the second press pin (19) fits a safety sleeve (20) and a press down channel (17) so as to achieve a safety function of the triggering button (10) and a barb (12) on the second press pin (19) fits a self locking hook (13) on the housing (1) so as to achieve a self locking function after one press. In order to shorten the needle exposure length of a needle body on the needle core in the automatic blood collection needle the distance between the second press pin (19) and the needle point (7) is designed to be less than the distance between the first press pin (11) and the needle point (7); the needle exposure length depends on the position of the safety sleeve (20) so the needle exposure length is shortened thereby enhancing the puncture performance and enabling the design of the blood collection needle to be more reasonable and practical.

No. of Pages : 22 No. of Claims : 5

(12) PATENT APPLICATION PUBLICATION
(19) INDIA
(22) Date of filing of Application :06/09/2013
(21) Application No.7838/DELNP/2013 A
(43) Publication Date : 19/12/2014

(54) Title of the invention : COMPOSITION COMPRISING PERLITE AND A POLYMER BEARING A CARBOSILOXANE DENDRIMER BASED UNIT

(51) International classification :A61K8/25,A61K8/26,A61K8/895
(31) Priority Document No :11 52807
(32) Priority Date :01/04/2011
(33) Name of priority country :France
(86) International Application No :PCT/EP2012/055908
Filing Date :30/03/2012
(87) International Publication No :WO 2012/131083
(61) Patent of Addition to Application Number :NA
Filing Date :NA
(62) Divisional to Application Number :NA
Filing Date :NA

(71)**Name of Applicant :**
1)LOREAL
Address of Applicant :14 rue Royale F 75008 Paris France
(72)**Name of Inventor :**
1)ARNAUD Pascal
2)CHEN Amanda
3)LEGROS Anne Catherine

(57) Abstract :
The present invention concerns a composition comprising a physiologically acceptable medium containing perlite and at least one vinyl polymer bearing at least one carbosiloxane dendrimer based unit. The composition is used in the care of and for making up the skin in particular to provide a matt effect.

No. of Pages : 52 No. of Claims : 15

(12) PATENT APPLICATION PUBLICATION
(19) INDIA
(22) Date of filing of Application :06/09/2013
(21) Application No.7839/DELNP/2013 A
(43) Publication Date : 19/12/2014

(54) Title of the invention : COLD ROLLED STEEL SHEET AND PRODUCTION METHOD THEREFOR

(51) International classification :C22C38/06,C22C38/58,C21D8/02
(31) Priority Document No :2011070725
(32) Priority Date :28/03/2011
(33) Name of priority country :Japan
(86) International Application No :PCT/JP2012/058199
Filing Date :28/03/2012
(87) International Publication No :WO 2012/133563
(61) Patent of Addition to Application Number :NA
Filing Date :NA
(62) Divisional to Application Number :NA
Filing Date :NA

(71)**Name of Applicant :**
1)NIPPON STEEL & SUMITOMO METAL CORPORATION
Address of Applicant :6 1 Marunouchi 2 chome Chiyoda ku Tokyo 1008071 Japan
(72)**Name of Inventor :**
1)NOZAKI Takayuki
2)TAKAHASHI Manabu
3)FUJITA Nobuhiro
4)YOSHIDA Hiroshi
5)WATANABE Shinichiro
6)YAMAMOTO Takeshi

(57) Abstract :
This is a cold-rolled steel sheet includes, by mass%, C: 0.02% to 0.4%, Si: 0.001% to 2.5%, Mn: 0.001% to 4.0%, and Al: 0.001% to 2.0%. The sum of the Si content and the Al content is 1.0% to 4.5%). An average pole density of an orientation group from {100}<011>to {223}<110>is 1.0 to 6.5, and a pole density of a crystal orientation {332}<113> is 1.0 to 5.0. A microstructure includes, by an area ratio%, 5% to 80%> of ferrite, 5% to 80% of bainite, and 2% to 30% of retained austenite. In the microstructure, by an area ratio%, martensite is limited to 20% or less, pearlite is limited to 10% or less, and tempered martensite is limited to 60% or less.

No. of Pages : 89 No. of Claims : 19

(12) PATENT APPLICATION PUBLICATION
(19) INDIA
(22) Date of filing of Application :23/07/2013
(21) Application No.6590/DELNP/2013 A
(43) Publication Date : 19/12/2014

(54) Title of the invention : MONITORING THE HEALTH OF A BLOWOUT PREVENTER

(51) International classification :E21B33/064,E21B41/00
(31) Priority Document No :61/436731
(32) Priority Date :27/01/2011
(33) Name of priority country :U.S.A.
(86) International Application No :PCT/US2011/059957
Filing Date :09/11/2011
(87) International Publication No :WO 2012/102775
(61) Patent of Addition to Application Number :NA
Filing Date :NA
(62) Divisional to Application Number :NA
Filing Date :NA

(71)**Name of Applicant :**
1)BP CORPORATION NORTH AMERICA INC.
Address of Applicant :501 Westlake Park Boulevard Houston TX 77079 U.S.A.
(72)**Name of Inventor :**
1)MCKAY James Edwin
2)STARLING Gavin Triscott

(57) Abstract :
A computerized monitoring system and corresponding method of monitoring the status and health of a blowout preventer. The system includes a graphics display at which a graphical user interface (GUI) displays the health of various sealing elements and control systems by way of traffic light indicators. The health indicators are evaluated by the monitoring system based on a risk profile for each of the indicated elements and control systems. The risk profiles are evaluated based on inputs such as measurement inputs feedback signals mechanical positions diagnostic results drilling conditions and other status information of the blowout preventer at a given time and based on levels of redundancy and levels of deviation from normal conditions. The GUI includes recent history of changes in operating condition and alarm indications such as poor health along with the times of those events.

No. of Pages : 55 No. of Claims : 30

(12) PATENT APPLICATION PUBLICATION
(19) INDIA
(22) Date of filing of Application :06/09/2013
(21) Application No.7843/DELNP/2013 A
(43) Publication Date : 19/12/2014

(54) Title of the invention : MULTIPURPOSE DETERGENT COMPOSITIONS

(51) International classification :C11D1/83,C11D3/20
(31) Priority Document No :61/449895
(32) Priority Date :07/03/2011
(33) Name of priority country :U.S.A.
(86) International Application No :PCT/US2012/028004
Filing Date :07/03/2012
(87) International Publication No :WO 2012/122232
(61) Patent of Addition to Application Number :NA
Filing Date :NA
(62) Divisional to Application Number :NA
Filing Date :NA

(71)**Name of Applicant :**
1)THE PROCTER & GAMBLE COMPANY
Address of Applicant :One Procter & Gamble Plaza Cincinnati Ohio 45202 U.S.A.
(72)**Name of Inventor :**
1)FRANKENBACH Gayle Marie
2)PANCHERI Eugene Joseph
3)DAVIS Jan Richard
4)KWON Seok

(57) Abstract :
A multipurpose detergent composition comprising from about 5% to about 25% by weight based on the weight of the multipurpose detergent composition of a surfactant system comprising: from about 20% to about 100% by weight based on the weight of the surfactant system of at least one anionic surfactant wherein no more than about 12% by weight of the overall multipurpose detergent composition comprises anionic surfactants having more than 14 carbon atoms; from about 0.04% to about 40% by weight based on the weight of the surfactant system of an ethoxylated nonionic surfactant; and from about 0.5% to about 5% by weight based on the weight of the multipurpose detergent composition of at least one organic acid each organic acid in the multipurpose detergent composition having fewer than 9 carbon atoms whereby the multipurpose detergent composition has a neat pH of from about 2 to about 7; the multipurpose detergent composition is substantially free of cationic surfactants zwitterionic surfactants and amphoteric surfactants; the multipurpose detergent composition is substantially free of enzymes; and the multipurpose detergent composition if substantially free of soil suspension polymers and soil release polymers

No. of Pages : 28 No. of Claims : 14

(12) PATENT APPLICATION PUBLICATION
(19) INDIA
(22) Date of filing of Application :06/09/2013
(21) Application No.7845/DELNP/2013 A
(43) Publication Date : 19/12/2014

(54) Title of the invention : AN IMPROVED PROCESS FOR THE PREPARATION OF VORICONAZOLE AND INTERMEDIATES THEREOF

(51) International classification :C07D403/06
(31) Priority Document No :433/Del/2011
(32) Priority Date :21/02/2011
(33) Name of priority country :India
(86) International Application No :PCT/IB2012/050791
Filing Date :21/02/2012
(87) International Publication No :WO 2012/114273
(61) Patent of Addition to Application Number :NA
Filing Date :NA
(62) Divisional to Application Number :NA
Filing Date :NA

(71)**Name of Applicant :**
1)RANBAXY LABORATORIES LIMITED
Address of Applicant :Head Office: 12th Floor Devika Tower 06 Nehru Place New Delhi Delhi 110019 Delhi India
(72)**Name of Inventor :**
1)MAHESHWARI Nitin
2)MEDHANE Roshan Ramesh
3)PRASAD Mohan
4)ARORA Sudershan Kumar

(57) Abstract :
The present invention relates to an improved stereoselective process for the preparation of (2R 3S/2S 3R) 3 (4 chloro 5 fluoropyrimidin 6 yl) 2 (2 4 difluorophenyl) 1 (1H l 2 4 triazol 1 yl)butan 2 ol intermediate compound. This intermediate compound is further used to prepare voriconazole a triazole antifungal agent.

No. of Pages : 16 No. of Claims : 7

(12) PATENT APPLICATION PUBLICATION
(19) INDIA
(22) Date of filing of Application :06/09/2013
(21) Application No.7846/DELNP/2013 A
(43) Publication Date : 19/12/2014

(54) Title of the invention : APPARATUS FOR ACCESSING THE NACELLE OF A WIND TURBINE AND ASSOCIATED METHODS

(51) International classification :F03D11/00,F03D1/00
(31) Priority Document No :61/453810
(32) Priority Date :17/03/2011
(33) Name of priority country :U.S.A.
(86) International Application No :PCT/DK2012/050076
Filing Date :14/03/2012
(87) International Publication No :WO 2012/122989
(61) Patent of Addition to Application Number :NA
Filing Date :NA
(62) Divisional to Application Number :NA
Filing Date :NA

(71)**Name of Applicant :**
1)VESTAS WIND SYSTEMS A/S
Address of Applicant :Hedeager 44 DK 8200 Aarhus N Denmark
(72)**Name of Inventor :**
1)ABOLFAZLIAN Mazyar
2)MOGENSEN Morten
3)BOVBJERG Jan Riis

(57) Abstract :
A wind turbine includes a tower having an interior an exterior a lower end and an upper end; a nacelle coupled to the tower adjacent the upper end and movable to define atleast two yaw positions of the nacelle; a rotor coupled to the nacelle; and an access apparatus disposed about the tower adjacent the upper end thereof the access apparatus defining a passageway into the nacelle that is exterior of the tower and the access apparatus providing access to the nacelle in the at least two yaw positions of the nacelle. A method for transporting equipment and personnel to the nacelle using the access apparatus is disclosed. A method for assembling a wind turbine having such an access apparatus is also disclosed.

No. of Pages : 45 No. of Claims : 24

(12) PATENT APPLICATION PUBLICATION
(19) INDIA
(22) Date of filing of Application :24/07/2013
(21) Application No.6609/DELNP/2013 A
(43) Publication Date : 19/12/2014

(54) Title of the invention : ABRASIVE PARTICLES HAVING PARTICULAR SHAPES AND METHODS OF FORMING SUCH PARTICLES

(51) International classification :B24D3/02,C09K3/14,C09C1/68
(31) Priority Document No :61/428912
(32) Priority Date :31/12/2010
(33) Name of priority country :U.S.A.
(86) International Application No :PCT/US2011/068179
Filing Date :30/12/2011
(87) International Publication No :WO 2012/092590
(61) Patent of Addition to Application Number :NA
Filing Date :NA
(62) Divisional to Application Number :NA
Filing Date :NA

(71)**Name of Applicant :**
1)SAINT GOBAIN CERAMICS & PLASTICS INC.
Address of Applicant :One New Bond Street Worcester 01615 0138 U.S.A.
(72)**Name of Inventor :**
1)YENER Doruk O.
2)CZEREPINSKI Jennifer H.
3)IYENGAR Sujatha
4)KAVANAUGH Michael D.

(57) Abstract :
An abrasive article includes a shaped abrasive particle including a body having a first height (h1) at a first end of the body defining a corner between an upper surface a first side surface and a second side surface and a second height (h2) at a second end of the body opposite the first end defining an edge between the upper surface and a third side surface wherein the average difference in height between the first height and the second height is at least about 50 microns. The body also includes a bottom surface defining a bottom area (A) and a cross sectional midpoint area (A) defining an area of a plane perpendicular to the bottom area and extending through a midpoint of the particle the body has an area ratio of bottom area to midpoint area (A/A) of not greater than about 6.

No. of Pages : 63 No. of Claims : 73

(12) PATENT APPLICATION PUBLICATION
(19) INDIA
(22) Date of filing of Application :06/09/2013
(21) Application No.7852/DELNP/2013 A
(43) Publication Date : 19/12/2014

(54) Title of the invention : VEHICLE INTERIOR STORAGE POCKET

(51) International classification :B60R7/00,B60R7/04
(31) Priority Document No :61/452949
(32) Priority Date :15/03/2011
(33) Name of priority country :U.S.A.
(86) International Application No :PCT/US2012/029261
Filing Date :15/03/2012
(87) International Publication No :WO 2012/125846
(61) Patent of Addition to Application Number :NA
Filing Date :NA
(62) Divisional to Application Number :NA
Filing Date :NA

(71)**Name of Applicant :**
1)JOHNSON CONTROLS TECHNOLOGY COMPANY
Address of Applicant :915 East 32nd Street Holland Michigan 49423 U.S.A.
(72)**Name of Inventor :**
1)BASHIR Raza Ahmed
2)ZADINA Emery Jay

(57) Abstract :
A vehicle interior storage pocket (20) includes a retaining sheet (24) having a first side piece (42) a second side piece (44) and a resilient material (46) extending between the first side piece and the second side piece (42 44). The resilient material is configured to bias the first and second side pieces toward one another. The vehicle interior storage pocket also includes a sleeve (26) disposed about the retaining sheet and configured to conceal the resilient material.

No. of Pages : 21 No. of Claims : 20

(12) PATENT APPLICATION PUBLICATION
(19) INDIA
(22) Date of filing of Application :06/09/2013

(21) Application No.7853/DELNP/2013 A
(43) Publication Date : 19/12/2014

(54) Title of the invention : 2 AMINO NAPHTHYRIDINE DERIVATIVES

(51) International classification :C07D471/04,A61K31/435,A61P35/00
(31) Priority Document No :61/446733
(32) Priority Date :25/02/2011
(33) Name of priority country :U.S.A.
(86) International Application No :PCT/US2012/026536
Filing Date :24/02/2012
(87) International Publication No :WO 2012/116288
(61) Patent of Addition to Application Number :NA
Filing Date :NA
(62) Divisional to Application Number :NA
Filing Date :NA

(71)**Name of Applicant :**
1)CONCERT PHARMACEUTICALS INC.
Address of Applicant :99 Hayden Avenue Suite 100 Lexington Massachusetts 02421 U.S.A.
(72)**Name of Inventor :**
1)SILVERMAN I. Robert

(57) Abstract :
The invention in one embodiment is directed to a compound of Formula A: as defined herein or a pharmaceutically acceptable salt thereof.

No. of Pages : 41 No. of Claims : 24

(12) PATENT APPLICATION PUBLICATION
(19) INDIA
(22) Date of filing of Application :06/09/2013
(21) Application No.7854/DELNP/2013 A
(43) Publication Date : 19/12/2014

(54) Title of the invention : COMBINATIONS OF ALPHA 7 NICOTINIC ACETYLCHOLINE RECEPTOR ACTIVATORS AND MGLUR5 ANTAGONISTS FOR USE IN DOPAMINE INDUCED DYSKINESIA IN PARKINSON S DISEASE

(51) International classification	:A61K31/44,A61K31/4748,A61K45/06
(31) Priority Document No	:61/454378
(32) Priority Date	:18/03/2011
(33) Name of priority country	:U.S.A.
(86) International Application No	:PCT/IB2012/051282
Filing Date	:16/03/2012
(87) International Publication No	:WO 2012/127393
(61) Patent of Addition to Application Number	:NA
Filing Date	:NA
(62) Divisional to Application Number	:NA
Filing Date	:NA

(71)**Name of Applicant :**
1)NOVARTIS AG
Address of Applicant :Lichtstrasse 35 CH 4056 Basel Switzerland
(72)**Name of Inventor :**
1)DI PAOLO Thrse
2)FEUERBACH Dominik
3)GOMEZ MANCILLA Baltazar
4)LOPEZ LOPEZ Cristina
5)JOHNS Donald

(57) Abstract :
The present invention relates to novel combinations suitable for the treatment of dyskinesia associated with dopamine agonist therapy in Parkinson s Disease which comprise as active ingredients at least one low molecular weight nicotinic acetylcholine receptor alpha 7 activator and at least one low molecular weight metabotropic glutamate receptor 5 antagonist; to their preparation; to their use as medicaments and to medicaments comprising them.

No. of Pages : 56 No. of Claims : 8

(12) PATENT APPLICATION PUBLICATION
(19) INDIA
(22) Date of filing of Application :06/09/2013
(21) Application No.7856/DELNP/2013 A
(43) Publication Date : 19/12/2014

(54) Title of the invention : INFRARED SENSOR

(51) International classification :G01J1/02,G01J5/02,H01L35/32
(31) Priority Document No :2011076768
(32) Priority Date :30/03/2011
(33) Name of priority country :Japan
(86) International Application No :PCT/JP2012/001976
Filing Date :22/03/2012
(87) International Publication No :WO 2012/132342
(61) Patent of Addition to Application Number :NA
Filing Date :NA
(62) Divisional to Application Number :NA
Filing Date :NA

(71)**Name of Applicant :**
1)MITSUBISHI MATERIALS CORPORATION
Address of Applicant :3 2 Otemachi 1 chome Chiyoda ku Tokyo 1008117 Japan
(72)**Name of Inventor :**
1)NAKAMURA Kenzo
2)ISHIKAWA Mototaka
3)UOZUMI Gakuji

(57) Abstract :
Provided is a lightweight infrared sensor that detected a temperature at a portion spaced apart; from a circuit substrate with high and accuracy, and is installed en the circuit, substrate easily and stably. The infrared sensir includes an insulating film; a first and a second heat sensitive elements are diseased on one surface ef the insulating film separately; a first conductive film on the insulating film that is connected to the first heat sensitive element; a second conductive film connected to the second heat sensitive element; an infrared reflection film on one other surface of the insulating film so as to face the second heat sensitive element; a plurality of terminal electrodes formed on one end of the insulating film and fitted into an external connector; an edge reinforcing plate adhered to one end of one surface of the insulating film.; and a mounting hole that is formed en the other end.

No. of Pages : 41 No. of Claims : 5

(12) PATENT APPLICATION PUBLICATION
(19) INDIA
(22) Date of filing of Application :16/05/2013
(21) Application No.1467/DEL/2013 A
(43) Publication Date : 19/12/2014

(54) Title of the invention : RFID TAGS

(51) International classification :G06K
(31) Priority Document No :NA
(32) Priority Date :NA
(33) Name of priority country :NA
(86) International Application No :NA
Filing Date :NA
(87) International Publication No : NA
(61) Patent of Addition to Application Number :NA
Filing Date :NA
(62) Divisional to Application Number :NA
Filing Date :NA

(71)**Name of Applicant :**
1)INDIAN INSTITUTE OF TECHNOLOGY KANPUR
Address of Applicant :INDIAN INSTITUTE OF TECHNOLOGY KANPUR, Kanpur 208 016 Uttar Pradesh Uttar Pradesh India
(72)**Name of Inventor :**
1)JAIN, Akshay
2)HARISH, Ayyangar Ranganath

(57) Abstract :
A RFID tag (104, 204, 302) may be provided on conductive surface (100, 200, 300) of an apparatus. A region (106, 206, 304) of unidirectional conductive strands (102, 202, 306) on the conductive surface (100, 200, 300) is defined and two shorting strips (110, 210, 310) are introduced on two opposite ends of the region (106, 206, 304). The two shorting strips are separated by a distance proportional to odd multiples of one-half of operational wavelength of the RFID tag and are disposed orthogonally to the unidirectional conductive strands (102, 202, 306) in the region (106, 206, 304). The RFID tag (104, 204, 302) is disposed at a distance proportional to one-quarter of the operational wavelength of the RFID tag from each of the two shorting strips (110, 210, 310) and is disposed orthogonally to the unidirectional conductive strands (102, 202, 306) in the region.

No. of Pages : 36 No. of Claims : 15

(12) PATENT APPLICATION PUBLICATION
(19) INDIA
(22) Date of filing of Application :21/05/2013
(21) Application No.1521/DEL/2013 A
(43) Publication Date : 19/12/2014

(54) Title of the invention : SUN SCREEN LOTION/GEL FORMULATION FOR SKIN FLUSHING AND INFLAMMATION

(51) International classification	:A61Q, A61K
(31) Priority Document No	:NA
(32) Priority Date	:NA
(33) Name of priority country	:NA
(86) International Application No	:NA
Filing Date	:NA
(87) International Publication No	: NA
(61) Patent of Addition to Application Number	:NA
Filing Date	:NA
(62) Divisional to Application Number	:NA
Filing Date	:NA

(71)**Name of Applicant :**
1)AMITY UNIVERSITY
Address of Applicant :AMITY UNIVERSITY CAMPUS, SECTOR-125, NOIDA-201303, UP, INDIA Uttar Pradesh India
(72)**Name of Inventor :**
1)HARSHA KHARKWAL

(57) Abstract :
The present invention relates to water soluble sunscreen lotion i.e., O/W type emulsion for the painhl acne. This gel formulation consists of Aloe Vera gel, potassium chloride, alcoholic extract of Curcuma longa taken along with dispersed (titanium (IV) oxide), 5-hydroxy-tryptophan etc. The formulation protect skin fiom ultraviolet rays .The formulation has viscosity modifiers like potassium borate grandis and Hydroxypalmate ester of grandis along with other additives which help in sustenance of the lotion for a desired period of time and in turn help as a cofactor in reducing inflammation.

No. of Pages : 15 No. of Claims : 6

(12) PATENT APPLICATION PUBLICATION
(19) INDIA
(22) Date of filing of Application :24/07/2013
(21) Application No.6612/DELNP/2013 A
(43) Publication Date : 19/12/2014

(54) Title of the invention : CLIP

(51) International classification :F16B19/10,F16B19/00
(31) Priority Document No :2011182530
(32) Priority Date :24/08/2011
(33) Name of priority country :Japan
(86) International Application No :PCT/JP2012/070216
Filing Date :08/08/2012
(87) International Publication No :WO 2013/027582
(61) Patent of Addition to Application Number :NA
Filing Date :NA
(62) Divisional to Application Number :NA
Filing Date :NA

(71)**Name of Applicant :**
1)DAIWA KASEI KOGYO KABUSHIKI KAISHA
Address of Applicant :1 Aza Kamihirachi Hobo cho Okazaki shi Aichi 4440004 Japan
(72)**Name of Inventor :**
1)KOMENO Jun
2)SUGIYAMA Takahiro
3)IWAHARA Toshio

(57) Abstract :
When fitted on the clip seat (22) of a mounted member (20) the clip is inserted into an installing hole (26) of a partner panel (24) and installs the mounted member (20) on the partner panel (24). The clip has a main clip body (10) that is made of resin and has a shape in front view that is closed at one end (10A) and open at the other end (10B). The main clip body (10) has engaging arms (12) and holding members (14) which are positioned to the inside of the engaging arms (12). The engaging arms (12) are configured so as to be pressed and elastically deformed when the main clip body (10) passes through the installing hole (26) of the partner panel (24) and to engage with the rim of the installing hole (26) when the engaging arms (12) have been inserted in the installing hole (26). The holding members (14) are configured so as to keep the main clip body (10) fitted on the clip seat (22) of the mounted member (20). The engaging arms (12) and the holding members (14) are connected to assume a substantially diamond shaped loop in front view and are configured so that the positions thereof differ in side view and overlap in front view when elastically deformed.

No. of Pages : 24 No. of Claims : 2

(12) PATENT APPLICATION PUBLICATION
(19) INDIA
(22) Date of filing of Application :06/09/2013
(21) Application No.7864/DELNP/2013 A
(43) Publication Date : 19/12/2014

(54) Title of the invention : PROCESS FOR PREPARING FLUORINATED DIOLS

(51) International classification :C07C31/38
(31) Priority Document No :61/443297
(32) Priority Date :16/02/2011
(33) Name of priority country :U.S.A.
(86) International Application No :PCT/US2012/025396
Filing Date :16/02/2012
(87) International Publication No :WO 2012/112751
(61) Patent of Addition to Application Number :NA
Filing Date :NA
(62) Divisional to Application Number :NA
Filing Date :NA

(71)**Name of Applicant :**
1)HALOCARBON PRODUCTS CORPORATION
Address of Applicant :P O Box 661 Kinderkamack Road River Edge NJ 07661 U.S.A.
(72)**Name of Inventor :**
1)MAZZELL Paul Jr.
2)PAVRI Neville
3)SWINSON Joel

(57) Abstract :
A process for preparing a fluorinated diol compound by reacting the corresponding ketone alcohol or aldehyde alcohol with hydrogen over a palladium catalyst in the vapor phase.

No. of Pages : 13 No. of Claims : 22

(12) PATENT APPLICATION PUBLICATION
(19) INDIA
(22) Date of filing of Application :19/07/2013
(21) Application No.6490/DELNP/2013 A
(43) Publication Date : 19/12/2014

(54) Title of the invention : NEW AZAINDOLYLPHENYL SULFONAMIDES AS SERINE/THREONINE KINASE INHIBITORS

(51) International classification	:C07D471/04,C07D487/04,A61K31/519
(31) Priority Document No	:11153087.9
(32) Priority Date	:02/02/2011
(33) Name of priority country	:EPO
(86) International Application No	:PCT/EP2012/051796
Filing Date	:02/02/2012
(87) International Publication No	:WO 2012/104388
(61) Patent of Addition to Application Number	:NA
Filing Date	:NA
(62) Divisional to Application Number	:NA
Filing Date	:NA

(71)**Name of Applicant :**
1)BOEHRINGER INGELHEIM INTERNATIONAL GMBH
Address of Applicant :Binger Strasse 173 55216 Ingelheim Am Rhein Germany
(72)**Name of Inventor :**
1)STADTMUELLER Heinz

(57) Abstract :
The present invention encompasses compounds of general formula (I) wherein the groups R to R A X Y and m are defined as in claim 1 which are suitable for the treatment of diseases characterised by excessive or abnormal cell proliferation pharmaceutical preparations which contain compounds of this kind and their use as medicaments.

No. of Pages : 97 No. of Claims : 43

(12) PATENT APPLICATION PUBLICATION
(19) INDIA
(22) Date of filing of Application :24/07/2013
(21) Application No.6598/DELNP/2013 A
(43) Publication Date : 19/12/2014

(54) Title of the invention : BIOREACTOR INCLUDING A ROCKING DEVICE

(51) International classification :C12M3/00
(31) Priority Document No :11501541
(32) Priority Date :23/02/2011
(33) Name of priority country :Sweden
(86) International Application No :PCT/SE2012/050187
Filing Date :21/02/2012
(87) International Publication No :WO 2012/115581
(61) Patent of Addition to Application Number :NA
Filing Date :NA
(62) Divisional to Application Number :NA
Filing Date :NA

(71)**Name of Applicant :**
1)GE HEALTHCARE BIO SCIENCES AB
Address of Applicant :Patent Department Bjrkgatan 30 S 751 84 Uppsala Sweden
(72)**Name of Inventor :**
1)ANDERSSON Andreas
2)CARLSSON L. Johan
3)ELNEG…RD Christian
4)ERIKSSON Henrik K.
5)FALKMAN Thomas
6)FRICKING Patric
7)PAULER Linna
8)PETERSON Claes

(57) Abstract :
The present invention relates to a bioreactor including at least one reactor vessel in form of a plastic bag a tray (4) for holding said at least one bag a rocking device for limited rocking motions of the tray (4) around a rocking axis (2). According to the invention the bioreactor comprises a device (6 7 8 9) for enabling swinging of the tray (4) around a second axis (7) parallel to and distanced from the rocking axis (2).

No. of Pages : 11 No. of Claims : 7

(12) PATENT APPLICATION PUBLICATION
(19) INDIA
(22) Date of filing of Application :24/07/2013
(21) Application No.6599/DELNP/2013 A
(43) Publication Date : 19/12/2014

(54) Title of the invention : BIOREACTOR WITH FEED AND HARVEST FLOW THROUGH FILTER ASSEMBLY

(51) International classification :C12M3/06,B01D33/44,C12M1/12
(31) Priority Document No :11501582
(32) Priority Date :24/02/2011
(33) Name of priority country :Sweden
(86) International Application No :PCT/SE2012/050198
Filing Date :22/02/2012
(87) International Publication No :WO 2012/115586
(61) Patent of Addition to Application Number :NA
Filing Date :NA
(62) Divisional to Application Number :NA
Filing Date :NA

(71)**Name of Applicant :**
1)GE HEALTHCARE BIO SCIENCES AB
Address of Applicant :Patent Department Bjrkgatan 30 S 751 84 Uppsala Sweden
(72)**Name of Inventor :**
1)FRICKING Patric

(57) Abstract :
The present invention relates to a bioreactor and a method for operating a bioreactor which comprises a chamber(100) capable of receiving a liquid media and a filter assembly (200) comprising a perfusion filter(210; 212; 214). The filter assembly (200) is disposed in the chamber(100) and the filter assembly (200) is free to move within the chamber(100). The filter assembly(200) comprises means for coupling a harvesting flow through said filter (210; 212; 214) and means for coupling a feed flow through said filter in an opposite direction compared to the harvesting flow. Through this arrangement the clogging prevention of the perfusion filter can be improved.

No. of Pages : 16 No. of Claims : 10

(12) PATENT APPLICATION PUBLICATION
(19) INDIA
(22) Date of filing of Application :09/09/2013
(21) Application No.7875/DELNP/2013 A
(43) Publication Date : 19/12/2014

(54) Title of the invention : COMPACT DRY TOILET INSTALLATION

(51) International classification :A47K11/02
(31) Priority Document No :11 52679
(32) Priority Date :31/03/2011
(33) Name of priority country :France
(86) International Application No :PCT/FR2012/050529
Filing Date :14/03/2012
(87) International Publication No :WO 2012/131210
(61) Patent of Addition to Application Number :NA
Filing Date :NA
(62) Divisional to Application Number :NA
Filing Date :NA

(71)**Name of Applicant :**
1)ECOSPHERE TECHNOLOGIES
Address of Applicant :Quartier La Condamine F 26110 Saint Ferreol Trente Pas France
(72)**Name of Inventor :**
1)COLOMBOT Pierre

(57) Abstract :
The invention relates to a toilet installation having: a toilet seat (2) in the form of a hollow body in which there is formed an opening (3) for removing liquid effluents (4) and solid waste under gravity a conveyor belt (15) mounted in an inclined manner delimiting between a bottom part and a top part a surface (14) for receiving the liquid effluents and solid waste in order to separate the liquid effluents and the solid waste under gravity a part of the conveyor belt starting from the bottom part thereof being mounted inside the toilet seat the other part protruding from the rear face of the seat a device (25) for recovering the liquid effluents (4) having a reception tank mounted inside the toilet seat.

No. of Pages : 21 No. of Claims : 12

(12) PATENT APPLICATION PUBLICATION
(19) INDIA
(22) Date of filing of Application :09/09/2013
(21) Application No.7876/DELNP/2013 A
(43) Publication Date : 19/12/2014

(54) Title of the invention : CANOLA GERMPLASM EXHIBITING SEED COMPOSITIONAL ATTRIBUTES THAT DELIVER ENHANCED CANOLA MEAL NUTRITIONAL VALUE

(51) International classification :A23J1/14,A23J3/14,A23L1/305
(31) Priority Document No :61/445426
(32) Priority Date :22/02/2011
(33) Name of priority country :U.S.A.
(86) International Application No :PCT/US2012/025975
Filing Date :21/02/2012
(87) International Publication No :WO 2012/145064
(61) Patent of Addition to Application Number :NA
Filing Date :NA
(62) Divisional to Application Number :NA
Filing Date :NA

(71)**Name of Applicant :**
1)AGRIGENETICS INC.
Address of Applicant :9330 Zionsville Road Indianapolis IN 46268 U.S.A.
(72)**Name of Inventor :**
1)KUBIK Thomas James
2)GINGERA Gregory R.
3)RIPLEY Van Leonard
4)BEAITH Michelle E.
5)PATTERSON Thomas G.

(57) Abstract :
The present invention concerns a canola germplasm comprising at least 45% crude protein and not more than 18% acid detergent fiber content on an oil free dry matter basis. Certain embodiments further comprise one or more traits selected from the group consisting of reduced polyphenolic content and increased phosphorous content. In particular embodiments the invention concerns canola plants comprising such germplasm and plant commodity products (e.g. seeds) produced therefrom. Canola plants comprising a germplasm of the invention may exhibit favorable seed composition characteristics that make them particularly valuable as a source for canola meal and for methods of introducing at least one trait selected from the group consisting of high protein content low fiber content reduced polyphenolic content and increased phosphorous contentinto a canola variety in a seed coat color independent manner.

No. of Pages : 67 No. of Claims : 44

(12) PATENT APPLICATION PUBLICATION
(19) INDIA
(22) Date of filing of Application :24/07/2013
(21) Application No.6594/DELNP/2013 A
(43) Publication Date : 19/12/2014

(54) Title of the invention : METHOD AND DEVICE FOR DETECTING DEFECTS IN MATERIAL DISTRIBUTION IN TRANSPARENT CONTAINERS

(51) International classification :G01N21/90,G01B11/06
(31) Priority Document No :1151363
(32) Priority Date :18/02/2011
(33) Name of priority country :France
(86) International Application No :PCT/FR2012/050339
Filing Date :16/02/2012
(87) International Publication No :WO 2012/110749
(61) Patent of Addition to Application Number :NA
Filing Date :NA
(62) Divisional to Application Number :NA
Filing Date :NA

(71)**Name of Applicant :**
1)MSC & SGCC
Address of Applicant :1 Chemin Des Plattes Zone Artisanale des Plattes F 69390 Vourles France
(72)**Name of Inventor :**
1)LECONTE Marc
2)BATHELET Guillaume

(57) Abstract :
The invention relates to an inspection method for detecting thin defects on transparent containers (2) having a central axis (A) the method comprising for a series of inspection points distributed over an inspection region in a stacked manner according to a predetermined height of the container taken along the central axis (A) and along the circumference of the container: sending a light beam (9) so as to collect on a light sensor (16) the beams reflected (12 11) by the inner (6) and outer (5) surfaces of the wall of the container; measuring at each inspection point the thickness of the wall (3) according to the separation at the light sensor (16) between the beams reflected by the inner and outer surfaces; and processing the thickness measurements by analysing the distribution thereof over the inspection region in order to extract the geometric features thereof and comparing said geometric features with reference values in order to determine whether the container has a defect in the material distribution thereof.

No. of Pages : 23 No. of Claims : 15

(12) PATENT APPLICATION PUBLICATION
(19) INDIA
(22) Date of filing of Application :24/07/2013
(21) Application No.6595/DELNP/2013 A
(43) Publication Date : 19/12/2014

(54) Title of the invention : MOLTEN SALT BATH FOR NITRIDING MECHANICAL STEEL PARTS AND IMPLEMENTATION METHOD

(51) International classification :C23C8/50,C23C8/56
(31) Priority Document No :1152020
(32) Priority Date :11/03/2011
(33) Name of priority country :France
(86) International Application No :PCT/FR2012/050479
Filing Date :07/03/2012
(87) International Publication No :WO 2012/146839
(61) Patent of Addition to Application Number :NA
Filing Date :NA
(62) Divisional to Application Number :NA
Filing Date :NA

(71)**Name of Applicant :**
1)H.E.F.
Address of Applicant :Zone Industrielle Sud Rue Beno®t Fourneyron F 42160 Andrezieux Boutheon France
(72)**Name of Inventor :**
1)CHAVANNE Herv
2)MAURIN PERRIER Philippe

(57) Abstract :
The invention relates to a molten salt bath for nitriding mechanical steel parts essentially consisting of the following (the contents being expressed in wt %): 25 to 60 wt % of alkali metal chlorides; 10 to 40 wt % of alkali metal carbonates; 20 to 50 wt % of alkali metal cyanates; and a maximum of 3 wt % of cyanide ions (formed during the use of the bath) wherein the total of the contents is 100 wt %. Preferably the bath contains: 25 to 30 wt % of sodium cyanate; 25 to 30 wt % of sodium carbonate and lithium carbonate; 40 to 50 wt % of potassium chlorides; and a maximum of 3 wt % of cyanide ions (formed during the use of the bath) the total of the contents being 100 wt %.

No. of Pages : 18 No. of Claims : 13

(12) PATENT APPLICATION PUBLICATION
(19) INDIA
(22) Date of filing of Application :24/07/2013
(21) Application No.6597/DELNP/2013 A
(43) Publication Date : 19/12/2014

(54) Title of the invention : CATALYSTS FOR USE IN STEAM REFORMING PROCESSES

(51) International classification :B01J23/40,B01J23/52,B01J23/72
(31) Priority Document No :1102502.0
(32) Priority Date :14/02/2011
(33) Name of priority country :U.K.
(86) International Application No :PCT/GB2012/050250
Filing Date :06/02/2012
(87) International Publication No :WO 2012/110781
(61) Patent of Addition to Application Number :NA
Filing Date :NA
(62) Divisional to Application Number :NA
Filing Date :NA

(71)**Name of Applicant :**
1)JOHNSON MATTHEY PUBLIC LIMITED COMPANY
Address of Applicant :5th floor 25 Farringdon Street London EC4A 4AB U.K.
(72)**Name of Inventor :**
1)FEAVIOUR Mark Robert

(57) Abstract :
A method is described for preparing a catalyst suitable for use in a steam reforming process comprising the steps of: (i) spraying a slurry containing a particulate catalyst compound comprising one or more catalytic metals selected from the group consisting of Ni Cu Pt Pd Rh Ru and Au on to the surface of a shaped support in a pan coater to form a coated shaped support material having the catalytic metal in a surface layer (ii) drying and optionally calcining the coated shaped support material to form a catalyst precursor and (iii) optionally reducing the metal or metals in the catalyst precursor to a lower oxidation state to form the catalyst. Use of the egg shell catalyst for performing a steam reforming reaction.

No. of Pages : 14 No. of Claims : 27

(12) PATENT APPLICATION PUBLICATION
(19) INDIA
(22) Date of filing of Application :09/09/2013
(21) Application No.7880/DELNP/2013 A
(43) Publication Date : 19/12/2014

(54) Title of the invention : IMPROVEMENTS IN CALL DELAY CONTROL

(51) International classification :H04L29/06,H04L12/56
(31) Priority Document No :1104555.6
(32) Priority Date :17/03/2011
(33) Name of priority country :U.K.
(86) International Application No :PCT/GB2012/050588
Filing Date :16/03/2012
(87) International Publication No :WO 2012/123762
(61) Patent of Addition to Application Number :NA
Filing Date :NA
(62) Divisional to Application Number :NA
Filing Date :NA

(71)**Name of Applicant :**
1)BAE SYSTEMS PLC
Address of Applicant :6 Carlton Gardens London SW1Y 5AD U.K.
(72)**Name of Inventor :**
1)SALTER Robert John

(57) Abstract :
There is described a communications apparatus (700) comprising ports (702 706) configured to receive a first packetised communications signal (PCS) from a first communications network (704) to deliver a second PCS to at least one communications device (710) attached to a second communications network (708) and to receive a return communications signal from the second communications network (708); and a call handling controller (720) arranged to pass a PCS between the first port (702) and the second port (706) said controller comprising a delay monitor (722) configured to determine a round trip delay for PCSs exchanged between the first communication network (704) and the at least one communications device (710) via the call handling controller (720). In dependence on the determined round trip delay the received first PCS is transformed into said second PCS by a formatting engine (724) which applies a suitable selected packet format.

No. of Pages : 27 No. of Claims : 19

(12) PATENT APPLICATION PUBLICATION
(19) INDIA
(22) Date of filing of Application :06/09/2013
(21) Application No.7865/DELNP/2013 A
(43) Publication Date : 19/12/2014

(54) Title of the invention : SEPARATION PROCESSES USING DIVIDED COLUMNS

(51) International classification :B01D3/14
(31) Priority Document No :61/767434
(32) Priority Date :21/02/2013
(33) Name of priority country :U.S.A.
(86) International Application No :PCT/US2013/031591
Filing Date :14/03/2013
(87) International Publication No :WO 2014/130066
(61) Patent of Addition to Application Number :NA
Filing Date :NA
(62) Divisional to Application Number :NA
Filing Date :NA

(71)**Name of Applicant :**
1)GTC TECHNOLOGY US LLC
Address of Applicant :1001 S. Dairy Ashford Suite 500 Houston TX 77077 U.S.A.
(72)**Name of Inventor :**
1)BHARGAVA Manish
2)NELSON Cole

(57) Abstract :
The claimed invention provides a technique wherein the two column system is combined into a single column. The light components are concentrated on the prefractionation side (feed side) of the column where they are removed as an overhead top product. The middle boiling components are removed as an overhead product on the opposite side of dividing wall. For the same product specifications top divided column requires substantially lower capital and operating cost than a conventional two column system.

No. of Pages : 10 No. of Claims : 10

(12) PATENT APPLICATION PUBLICATION
(19) INDIA
(22) Date of filing of Application :06/09/2013
(21) Application No.7866/DELNP/2013 A
(43) Publication Date : 19/12/2014

(54) Title of the invention : A METHOD FOR REDUCING ENERGY CONSUMPTION BY THERMAL COUPLING

(51) International classification :B01D3/14
(31) Priority Document No :61/763326
(32) Priority Date :11/02/2013
(33) Name of priority country :U.S.A.
(86) International Application No :PCT/US2013/031142
Filing Date :14/03/2013
(87) International Publication No :WO 2014/123554
(61) Patent of Addition to Application Number :NA
Filing Date :NA
(62) Divisional to Application Number :NA
Filing Date :NA

(71)**Name of Applicant :**
1)GTC TECHNOLOGY US LLC
Address of Applicant :1001 S. Dairy Ashford Suite 500 Houston TX 77077 U.S.A.
(72)**Name of Inventor :**
1)BHARGAVA Manish
2)LAKHA Ashraf
3)JOSHI Sachin
4)KOK TingTing

(57) Abstract :
The claimed invention relates to a method for reducing energy consumption in a distillation process by using thermal coupling. Embodiments of the claimed invention are directed to the inclusion of a side reboiler and a partial condenser in the prefractionation section of a first column which in turn helps to uniformly distribute the vapor liquid traffic between a first column and a second column.

No. of Pages : 10 No. of Claims : 9

(12) PATENT APPLICATION PUBLICATION
(19) INDIA
(22) Date of filing of Application :06/09/2013
(21) Application No.7867/DELNP/2013 A
(43) Publication Date : 19/12/2014

(54) Title of the invention : EXHAUST GAS PURIFICATION CATALYST

(51) International classification :B01D53/94,B01J23/00,B01J23/63
(31) Priority Document No :2011053404
(32) Priority Date :10/03/2011
(33) Name of priority country :Japan
(86) International Application No :PCT/IB2012/000386
Filing Date :02/03/2012
(87) International Publication No :WO 2012/120349
(61) Patent of Addition to Application Number :NA
Filing Date :NA
(62) Divisional to Application Number :NA
Filing Date :NA

(71)**Name of Applicant :**
1)TOYOTA JIDOSHA KABUSHIKI KAISHA
Address of Applicant :1 Toyota cho Toyota shi Aichi ken 471 8571 Japan
(72)**Name of Inventor :**
1)CHINZEI Isao

(57) Abstract :
AN EXHAUST GAS PURIFICATION CATALYST IS PROVIDED WITH A CATALYST COATING LAYER (40) FORMED ON THE SURFACE OF A SUBSTRATE (32). THIS CATALYST COATING LAYER (40) IS FORMED OF AN UPPER CATALYST COATING LAYER (36) IN WHICH RH PARTICLES ARE SUPPORTED ON A POROUS SUPPORT AND A LOWER CATALYST COATING LAYER (34) IN WHICH PD PARTICLES ARE SUPPORTED ON A SUPPORT THAT CONTAINS AN ACZ COMPOSITE OXIDE MADE OF ALUMINA (ALO) CERIA (CEO) AND ZIRCONIA (ZRO).

No. of Pages : 28 No. of Claims : 11

(12) PATENT APPLICATION PUBLICATION
(19) INDIA
(22) Date of filing of Application :06/09/2013
(21) Application No.7868/DELNP/2013 A
(43) Publication Date : 19/12/2014

(54) Title of the invention : YARN STORAGE DEVICE AND YARN WINDING DEVICE

(51) International classification :B65H51/22,B65H59/10,D01H13/00
(31) Priority Document No :2011024152
(32) Priority Date :07/02/2011
(33) Name of priority country :Japan
(86) International Application No :PCT/JP2011/006976
Filing Date :14/12/2011
(87) International Publication No :WO 2012/107984
(61) Patent of Addition to Application Number :NA
Filing Date :NA
(62) Divisional to Application Number :NA
Filing Date :NA

(71)**Name of Applicant :**
1)Murata Machinery Ltd.
Address of Applicant :3 Minami Ochiai cho Kisshoin Minami ku Kyoto shi Kyoto 6018326 Japan
(72)**Name of Inventor :**
1)IMAMURA Yuji

(57) Abstract :
A yarn storage device (18) is configured so that yarn is wound and stored around a yarn storage section (37) formed on the outer peripheral surface of a yarn storage roller (32) and that the yarn is unwound from the yarn storage section (37) in the direction along the rotation axis of the yarn storage roller (32). Also the yarn storage device (18) is provided with a tension application section (38). The tension application section (38) is provided on the side of the yarn storage section (37) from which the yarn is unwound and the tension application section (38) applies tension to the yarn which is being unwound from the yarn storage section (37) while rotating integrally with the yarn storage section (37). The tension application section (38) comprises: a rubber ring (51) consisting of a stretchable elastic body; and an expanding and contracting section (50) provided on the inner side radially of the rubber ring (51) and sandwiching the yarn between the expanding and contracting section (50) and the rubber ring (51). The diameter of the expanding and contracting section (50) is increased and decreased according to the rotational speed of the yarn storage roller (32).

No. of Pages : 61 No. of Claims : 9

(12) PATENT APPLICATION PUBLICATION
(19) INDIA
(22) Date of filing of Application :06/09/2013
(21) Application No.7869/DELNP/2013 A
(43) Publication Date : 19/12/2014

(54) Title of the invention : A REGENERATIVE ADSORPTION DISTILLATION SYSTEM

(51) International classification :B01D1/26,B01D53/04,C02F9/00
(31) Priority Document No :61/450165
(32) Priority Date :08/03/2011
(33) Name of priority country :U.S.A.
(86) International Application No :PCT/SG2012/000076
Filing Date :07/03/2012
(87) International Publication No :WO 2012/121675
(61) Patent of Addition to Application Number :NA
Filing Date :NA
(62) Divisional to Application Number :NA
Filing Date :NA

(71)**Name of Applicant :**
1)NATIONAL UNIVERSITY OF SINGAPORE
Address of Applicant :21 Lower Kent Ridge Road Singapore 119077 Singapore
2)KING ABDULLAH UNIVERSITY OF SCIENCE AND TECHNOLOGY
(72)**Name of Inventor :**
1)NG Kim Choon
2)KYAW Thu
3)AMY Gary
4)CHUNGGAZE Mohammed
5)AL GHASHAM Tawfiq

(57) Abstract :
There is provided a regenerative adsorption distillation system comprising a train of distillation effects in fluid communication with each other. The train of distillation effects comprises at least one intermediate effect between the first and last distillation effects of the train each effect comprising a vessel and a condensing tube for flow of a fluid therein. The system further comprises a pair of adsorption desorption beds in vapour communication with the last effect and at least one intermediate effect wherein the beds contain an adsorbent that adsorbs vapour from the last effect and transmits desorbed vapour into at least one of the intermediate effect.

No. of Pages : 38 No. of Claims : 31

(12) PATENT APPLICATION PUBLICATION
(19) INDIA
(22) Date of filing of Application :15/05/2013
(21) Application No.1441/DEL/2013 A
(43) Publication Date : 19/12/2014

(54) Title of the invention : METHOD FOR ASSAYING GLYCATED PROTEIN

(51) International classification :G01N
(31) Priority Document No :NA
(32) Priority Date :NA
(33) Name of priority country :NA
(86) International Application No :NA
Filing Date :NA
(87) International Publication No : NA
(61) Patent of Addition to Application Number :NA
Filing Date :NA
(62) Divisional to Application Number :NA
Filing Date :NA

(71)**Name of Applicant :**
1)COUNCIL OF SCIENTIFIC & INDUSTRIAL RESEARCH
Address of Applicant :ANUSANDHAN BHAWAN, RAFI MARG, NEW DELHI-110001, INDIA Delhi India
(72)**Name of Inventor :**
1)CHOPRA ADITY
2)NANGIA YOGESH KUMAR
3)SURI CHANDER RAMAN

(57) Abstract :
The main objective of the present invention is to have a method for the detection of the percentage of glycated proteins, glycated hemoglobin/GA, in sample using a bifurcated column coupled with an electronic reader. The column consisting of two channels with one arm immobilized with affinity matrix specific for glycated region of the total protein. Another objective of the present invention is to make this device efficient, handy and operable in all kinds of field conditions.

No. of Pages : 12 No. of Claims : 10

(12) PATENT APPLICATION PUBLICATION
(19) INDIA
(22) Date of filing of Application :15/05/2013
(21) Application No.1442/DEL/2013 A
(43) Publication Date : 19/12/2014

(54) Title of the invention : NON-TRANSGENIC WISTAR RAT AND CELLULAR MODEL OF ALZHEIMER'S DISEASE

(51) International classification :C07K
(31) Priority Document No :NA
(32) Priority Date :NA
(33) Name of priority country :NA
(86) International Application No :NA
Filing Date :NA
(87) International Publication No : NA
(61) Patent of Addition to Application Number :NA
Filing Date :NA
(62) Divisional to Application Number :NA
Filing Date :NA

(71)**Name of Applicant :**
1)COUNCIL OF SCIENTIFIC & INDUSTRIAL RESEARCH
Address of Applicant :ANUSANDHAN BHAWAN, RAFI MARG, NEW DELHI-110001, INDIA Delhi India
(72)**Name of Inventor :**
1)BANDYOPADHYAY SANGHAMITRA
2)ASHOK ANUSHRUTI
3)RAI NAGENDRA KUMAR
4)RAI ASIT
5)TRIPATHI SACHIN

(57) Abstract :
The invention features a non-transcienic rat model for early AD, using a metal mixture of As, Cd and Pb, characterized by enhanced synergistic amyloidogenicity in rat cortex and hippocampus. This model can serve as a tool for (a) AD-directed drug screening, and (b) determining mechanism of AD pathogenicity. It features induction of the A13-mediated apoptosis and induction of inflammation in rodent brain. The invention features novel astrocyte and neuronal cellular models for AD, using a metal mixture of As, Cd and Pb, characterized by enhanced synergistic amyloidogenicity. This model can serve as a tool for (a) AD-directed drug screening in astrocytes and neurons, and (b) determining mechanism of AD pathogenicity in cells. It features induction of the A3- mediated apoptosis and induction of inflammation in astrocytes and neurons.

No. of Pages : 43 No. of Claims : 20

(12) PATENT APPLICATION PUBLICATION
(19) INDIA
(22) Date of filing of Application :09/09/2013
(21) Application No.7883/DELNP/2013 A
(43) Publication Date : 19/12/2014

(54) Title of the invention : COMPOSITIONS AND METHODS TO SEQUESTER FLUE GAS MERCURY IN CONCRETE

(51) International classification :B01D53/10
(31) Priority Document No :13/072365
(32) Priority Date :25/03/2011
(33) Name of priority country :U.S.A.
(86) International Application No :PCT/US2012/028192
Filing Date :08/03/2012
(87) International Publication No :WO 2012/134754
(61) Patent of Addition to Application Number :NA
Filing Date :NA
(62) Divisional to Application Number :NA
Filing Date :NA

(71)**Name of Applicant :**
1)ALBEMARLE CORPORATION
Address of Applicant :451 Florida Street Baton Rouge LA 70801 U.S.A.
(72)**Name of Inventor :**
1)ZHANG Yinzhi
2)LANDRETH Ronald R.
3)ZHOU Qunhui
4)NALEPA Christopher J.
5)NELSON Sidney G. Jr.

(57) Abstract :
MERCURY ADSORBED FROM COMBUSTION GAS BY ACTIVATED CARBON CAN BE SEQUESTERED IN CONCRETE CONTAINING AIR ENTRAINING ADMIXTURES. THE ACTIVATED CARBON MAY BE MADE BY PROVIDING A CARBON CHAR MADE FROM COCONUT SHE!! WOOD OR LIGNITE THAT WAS ACTIVATED BY A METHOD SELECTED FROM THE GROUP CONSISTING OF ACTIVATING WITH STEAM ACTIVATING WITH CO ACTIVATING IN AN ENVIRONMENT CONTAINING FREE OXYGEN AND COMBINATIONS THEREOF TO PROVIDE AN ACTIVATED CARBON WITH AN ACID BLUE 80 INDEX OF LESS THAN ABOUT 30 MILLIGRAMS PER GRAM OF CARBON. THE ACTIVATED CARBON MAY BE INJECTED INTO A COMBUSTION GAS STREAM CONTAINING FLY ASH AND MERCURY AND MAY THEN BE REMOVED WITH FLY ASH FROM THE GAS STREAM. THE RESULTING COMPOSITION MAY BE USED AS A PARTIAL SUBSTITUTE FOR CEMENT IN AIR ENTRAINED CONCRETES

No. of Pages : 29 No. of Claims : 18

(12) PATENT APPLICATION PUBLICATION
(19) INDIA
(22) Date of filing of Application :19/07/2013
(21) Application No.6511/DELNP/2013 A
(43) Publication Date : 19/12/2014

(54) Title of the invention : RECHARGEABLE BATTERY SYSTEMS AND RECHARGEABLE BATTERY SYSTEM OPERATIONAL METHOD

(51) International classification	:H02J7/00,H01M10/44,H01M10/052
(31) Priority Document No	:13/010733
(32) Priority Date	:20/01/2011
(33) Name of priority country	:U.S.A.
(86) International Application No	:PCT/US2012/021436
Filing Date	:16/01/2012
(87) International Publication No	:WO 2012/099821
(61) Patent of Addition to Application Number	:NA
Filing Date	:NA
(62) Divisional to Application Number	:NA
Filing Date	:NA

(71)**Name of Applicant :**
1)VALENCE TECHNOLOGY INC.
Address of Applicant :1889 East Maule Ave. Suite A Las Vegas NV 89119 U.S.A.
(72)**Name of Inventor :**
1)NYSEN Peter

(57) Abstract :
Rechargeable battery systems and rechargeable battery system operational methods are described. According to one aspect a rechargeable battery system includes a plurality of rechargeable battery cells coupled between a plurality of terminals and charge shuttling circuitry configured to couple with and shuttle electrical energy between individual ones of the rechargeable battery cells and wherein the charge shuttling circuitry is configured to receive the electrical energy from one of the rechargeable battery cells at a first voltage and to provide the electrical energy to another of the rechargeable battery cells at a second voltage greater than the first voltage.

No. of Pages : 54 No. of Claims : 39

(12) PATENT APPLICATION PUBLICATION
(19) INDIA
(22) Date of filing of Application :09/09/2013
(21) Application No.7893/DELNP/2013 A
(43) Publication Date : 19/12/2014

(54) Title of the invention : METHOD OF AND APPARATUS FOR USING A GLASS FLUXING AGENT TO REDUCE FOAM DURING MELTING OF GLASS BATCH

(51) International classification :C03B3/00,C03B5/193,C03B5/20
(31) Priority Document No :61/453575
(32) Priority Date :17/03/2011
(33) Name of priority country :U.S.A.
(86) International Application No :PCT/US2012/028974
Filing Date :14/03/2012
(87) International Publication No :WO 2012/125665
(61) Patent of Addition to Application Number :NA
Filing Date :NA
(62) Divisional to Application Number :NA
Filing Date :NA

(71)**Name of Applicant :**
1)PPG INDUSTRIES OHIO INC.
Address of Applicant :3800 West 143rd Street Cleveland Ohio 44111 U.S.A.
(72)**Name of Inventor :**
1)JANSEN Lawrence E.
2)DUNN Rodney K.
3)EAKIN Robert E.
4)DIGIAMPAOLO Gerald

(57) Abstract :
A foam and frothy glass mixture that forms on a pool of molten glass and inhibits heat transfer between the overhead flames and the pool of molten glass is decreased if not eliminated by spreading a glass fluxing agent e.g. but not limiting to the invention sodium sulfate over the foam and/or frothy glass mixture (28). A device (30) for speading said glass fluxing agent is also provided. The device (30) comprises a spreading horn (32) and a pressurizing feeding arrangement (36)

No. of Pages : 17 No. of Claims : 21

(12) PATENT APPLICATION PUBLICATION
(19) INDIA
(22) Date of filing of Application :09/09/2013
(21) Application No.7894/DELNP/2013 A
(43) Publication Date : 19/12/2014

(54) Title of the invention : THERMO SENSITIVE MUCOADHESIVE OR DERMOADHESIVE AND PENETRATION ENHANCING FORMULATIONS FOR TOPICAL DELIVERY OF THERAPEUTICS

(51) International classification	:A61K47/48,A61K47/30,A61K38/16
(31) Priority Document No	:61/470551
(32) Priority Date	:01/04/2011
(33) Name of priority country	:U.S.A.
(86) International Application No	:PCT/US2012/031084
Filing Date	:29/03/2012
(87) International Publication No	:WO 2012/135422
(61) Patent of Addition to Application Number	:NA
Filing Date	:NA
(62) Divisional to Application Number	:NA
Filing Date	:NA

(71)**Name of Applicant :**
1)UNIVERSITY OF FLORIDA RESEARCH FOUNDATION INC.
Address of Applicant :223 Grinter Hall Gainesville FL 32611 U.S.A.
(72)**Name of Inventor :**
1)HSU Stephen I hong

(57) Abstract :
The present invention provides thermo sensitive mucoadhesive biopolymer formulations that enhance the penetration of therapeutics across the skin or mucosal surfaces. In a preferred embodiment the biopoiymer formulation comprises co polymer of poloxamer 188 and propylene glycol laurocapram and optionally one or more therapeutic agents. Also provided are uses of the biopoiymer formulations for topical therapy of cancer including cervical cancer.

No. of Pages : 31 No. of Claims : 37

(12) PATENT APPLICATION PUBLICATION
(19) INDIA
(22) Date of filing of Application :09/09/2013
(21) Application No.7895/DELNP/2013 A
(43) Publication Date : 19/12/2014

(54) Title of the invention : METHOD FOR PRODUCING GLYCERIN FROM TOBACCO

(51) International classification :A24D3/00,A24D3/08,A24D1/00
(31) Priority Document No :13/088924
(32) Priority Date :18/04/2011
(33) Name of priority country :U.S.A.
(86) International Application No :PCT/US2012/031473
Filing Date :30/03/2012
(87) International Publication No:WO 2012/145146
(61) Patent of Addition to Application Number :NA
Filing Date :NA
(62) Divisional to Application Number :NA
Filing Date :NA

(71)**Name of Applicant :**
1)R.J. REYNOLDS TOBACCO COMPANY
Address of Applicant :401 North Main Street Winston Salem North Carolina 27101 3804 U.S.A.
(72)**Name of Inventor :**
1)COLEMAN William
2)DUBE Michael Francis

(57) Abstract :
A METHOD FOR PRODUCING GLYCERIN FROM ONE OR MORE PLANTS OF GENUS IS PROVIDED. THE GLYCERIN CAN BE DERIVED FROM SPECIES BIOMASS OR FROM SEED. IN CERTAIN EMBODIMENTS THE GLYCERIN IS PRODUCED BY EITHER ACID CATALYZED HYDROLYSIS OR BASE CATALYZED HYDROLYSIS OF ACYLGLYCEROL CONTAINING STARTING MATERIAL DERIVED FROM TOBACCO BIOMASS OR SEED. THE INVENTION ALSO PROVIDES ARTICLES AND COMPOSITIONS INCLUDING SMOKING ARTICLES AND SMOKELESS TOBACCO COMPOSITIONS THAT INCLUDE GLYCERIN PRODUCED FROM ONE OR MORE PLANTS OF GENUS .

No. of Pages : 28 No. of Claims : 20

(12) PATENT APPLICATION PUBLICATION
(19) INDIA
(22) Date of filing of Application :09/09/2013
(21) Application No.7896/DELNP/2013 A
(43) Publication Date : 19/12/2014

(54) Title of the invention : ANALYZING FLUID RELEASE PROPERTIES OF A SUBTERRANEAN AREA OF THE EARTH

(51) International classification :G01N33/24
(31) Priority Document No :13/045525
(32) Priority Date :11/03/2011
(33) Name of priority country :U.S.A.
(86) International Application No :PCT/US2012/028622
Filing Date :09/03/2012
(87) International Publication No :WO 2012/125501
(61) Patent of Addition to Application Number :NA
Filing Date :NA
(62) Divisional to Application Number :NA
Filing Date :NA

(71)**Name of Applicant :**
1)BREAKTHROUGH RESEARCH PETROPHYSICS LLC
Address of Applicant :1302 Waugh Drive Unit 721 Houston TX 77019 U.S.A.
(72)**Name of Inventor :**
1)EVENSEN Joseph M.

(57) Abstract :
The method for estimating a fluid volume in a subterranean area of the earth includes performing a preliminary analysis on a geological sample (110) and placing the geological sample inside a chamber (120) monitoring pressure change over time data inside the chamber and crushing the geological sample. After crushing the geological sample the fluid volume based on the pressure change over time is estimated.

No. of Pages : 88 No. of Claims : 67

(12) PATENT APPLICATION PUBLICATION
(19) INDIA
(22) Date of filing of Application :09/09/2013
(21) Application No.7897/DELNP/2013 A
(43) Publication Date : 19/12/2014

(54) Title of the invention : METHOD AND APPARATUS FOR CONTROLLING FLUID FLOW IN AN AUTONOMOUS VALVE USING A STICKY SWITCH

(51) International classification :E21B34/14,E21B34/16
(31) Priority Document No :61/473669
(32) Priority Date :08/04/2011
(33) Name of priority country :U.S.A.
(86) International Application No :PCT/US2012/032044
Filing Date :04/04/2012
(87) International Publication No :WO 2012/138681
(61) Patent of Addition to Application Number :NA
Filing Date :NA
(62) Divisional to Application Number :NA
Filing Date :NA

(71)**Name of Applicant :**
1)HALLIBURTON ENERGY SERVICES INC.
Address of Applicant :10200 Bellaire Blvd. Houston TX 77072 U.S.A.
(72)**Name of Inventor :**
1)FRIPP Michael L.
2)DYKSTRA Jason D.

(57) Abstract :
Apparatus and methods are described for autonomously controlling fluid flow in a tubular in a wellbore. A fluid is flowed through an inlet passageway into a biasing mechanism. A fluid flow distribution is established across the biasing mechanism. The fluid flow distribution is altered in response to a change in the fluid characteristic over time. In response fluid flow through a downstream sticky switch assembly is altered thereby altering fluid flow patterns in a downstream vortex assembly. The method selects based on a fluid characteristic such as viscosity density velocity flow rate etc. The biasing mechanism can take various forms such as a widening passageway contour elements along the biasing mechanism or a curved section of the biasing mechanism passageway. The biasing mechanism can include hollows formed in the passageway wall obstructions extending from the passageway wall fluid diodes Tesla fluid diodes a chicane or abrupt changes in passageway cross section.

No. of Pages : 35 No. of Claims : 20

(12) PATENT APPLICATION PUBLICATION
(19) INDIA
(22) Date of filing of Application :09/09/2013
(21) Application No.7884/DELNP/2013 A
(43) Publication Date : 19/12/2014

(54) Title of the invention : LIGHT TRANSMITTING THERMOPLASTIC RESINS COMPRISING DOWN CONVERSION MATERIAL AND THEIR USE IN PHOTOVOLTAIC MODULES

(51) International classification :H01L31/048,H01L31/055,B32B17/10
(31) Priority Document No :61/470184
(32) Priority Date :31/03/2011
(33) Name of priority country :U.S.A.
(86) International Application No :PCT/US2012/030276
Filing Date :23/03/2012
(87) International Publication No :WO 2012/134992
(61) Patent of Addition to Application Number :NA
Filing Date :NA
(62) Divisional to Application Number :NA
Filing Date :NA

(71)**Name of Applicant :**
1)DOW GLOBAL TECHNOLOGIES LLC
Address of Applicant :2040 Dow Center Midland MI 48674 U.S.A.
(72)**Name of Inventor :**
1)WU Shaofu
2)CHEN Xuming
3)DE GRAAF Michael A.
4)ERSKINE Steven R.
5)FEIST Rebekah K.

(57) Abstract :
Disclosed are thermoplastic resin formulations for use as a light transmitting layer (e.g. encapsulant layer) in a photovoltaic module comprising: (a) a light transmitting thermoplastic resin (b) at least one down conversion material that exhibits a maximum in incident radiation absorption in the range of 280 to 500 nm and a maximum in radiation emission at a relatively longer wavelength in the range of 400 to 900 nm and improves the efficiency of photovoltaic electric current generation in a photovoltaic module; and (c) a light stabilizer additive that transmits at least about 40 percent of the ultraviolet (UV) electromagnetic radiation having a wavelength in the range of from about 280 nm to about 380 nm. Also disclosed are sheet materials prepared from such resins and photovoltaic modules incorporating such sheet materials.

No. of Pages : 37 No. of Claims : 8

(12) PATENT APPLICATION PUBLICATION
(19) INDIA
(22) Date of filing of Application :09/09/2013
(21) Application No.7886/DELNP/2013 A
(43) Publication Date : 19/12/2014

(54) Title of the invention : PLAIN BEARING HALF LINER

(51) International classification :F16C9/02,F16C33/10
(31) Priority Document No :10 2011 005 466.9
(32) Priority Date :11/03/2011
(33) Name of priority country :Germany
(86) International Application No :PCT/EP2012/051876
Filing Date :03/02/2012
(87) International Publication No :WO 2012/123186
(61) Patent of Addition to Application Number :NA
Filing Date :NA
(62) Divisional to Application Number :NA
Filing Date :NA

(71)**Name of Applicant :**
1)FEDERAL MOGUL WIESBADEN GMBH
Address of Applicant :Stielstrae 11 65201 Wiesbaden Germany
(72)**Name of Inventor :**
1)LEHMANN Uwe
2)GROOTEBOER Thomas

(57) Abstract :
The invention relates to a plain bearing half liner for a crankshaft main bearing (24) with a slot (10) which extends in the circumferential direction over an angle of 90 to 170° is closed at both circumferential ends of the plain bearing half liner and passes radially through the plain bearing half liner and with an otherwise oil groove free sliding surface (11) on the inside of said plain bearing half liner.

No. of Pages : 30 No. of Claims : 9

(12) PATENT APPLICATION PUBLICATION
(19) INDIA
(22) Date of filing of Application :09/09/2013
(21) Application No.7887/DELNP/2013 A
(43) Publication Date : 19/12/2014

(54) Title of the invention : GAIN CONTROL CIRCUIT COMMUNICATION APPARATUS ELECTRONIC DEVICE AND GAIN CONTROL METHOD

(51) International classification :H04B1/16,H03G3/20,H03G3/30
(31) Priority Document No :2011057725
(32) Priority Date :16/03/2011
(33) Name of priority country :Japan
(86) International Application No :PCT/JP2012/055862
Filing Date :07/03/2012
(87) International Publication No :WO 2012/124576
(61) Patent of Addition to Application Number :NA
Filing Date :NA
(62) Divisional to Application Number :NA
Filing Date :NA

(71)**Name of Applicant :**
1)SONY CORPORATION
Address of Applicant :1 7 1 Konan Minato ku Tokyo 1080075 Japan
(72)**Name of Inventor :**
1)TAKAHASHI Katsuaki
2)YOSHIKAWA Naoto

(57) Abstract :
The purpose of this disclosure is to provide a technique that can suppress inter modulation distortions. The present technique relates to a gain control circuit a communication apparatus an electronic device and a gain control method. The gain control circuit comprises: a first amplifier that amplifies an input signal; and a signal determining unit that determines the input signal to be input to the first amplifier and that controls the amplification factor of the first amplifier on the basis of the result of the determination. The communication apparatus comprises: a first amplifier that amplifies a received signal; a receiving unit that performs a reception process on the basis of the signal outputted from the first amplifier; and a signal determining unit that determines the received signal to be input to the first amplifier and that controls the amplification factor of the first amplifier on the basis of the result of the determination. The gain control method comprises: determining an input signal to be input to a first amplifier that amplifies the input signal; and controlling on the basis of the result of the determination the amplification factor of the first amplifier by use of a feedforward system.

No. of Pages : 52 No. of Claims : 17

(12) PATENT APPLICATION PUBLICATION
(19) INDIA
(22) Date of filing of Application :09/09/2013
(21) Application No.7889/DELNP/2013 A
(43) Publication Date : 19/12/2014

(54) Title of the invention : FLASH DEFROST SYSTEM

(51) International classification :F25B47/02,F25B41/04
(31) Priority Document No :1102485.8
(32) Priority Date :11/02/2011
(33) Name of priority country :U.K.
(86) International Application No :PCT/GB2012/050293
Filing Date :10/02/2012
(87) International Publication No :WO 2012/107773
(61) Patent of Addition to Application Number :NA
Filing Date :NA
(62) Divisional to Application Number :NA
Filing Date :NA

(71)**Name of Applicant :**
1)FRIGESCO LIMITED
Address of Applicant :5 Providence CourT Pynes Hill Exeter Devon EX2 5JL U.K.
(72)**Name of Inventor :**
1)DAVIES Thomas William
2)CAMPBELL Robin

(57) Abstract :
A vapour compression refrigeration system includes a compressor (1) arranged to re circulate refrigerant through a condenser (2) an expansion device (4) and an evaporator (5). To achieve rapid thermodynamically efficient defrosting of the evaporator hot refrigerant from the condenser is stored in a defrost receiver (6) before passing through the expansion device (4). In a defrost phase a valve arrangement (7 10) forms a closed defrost circuit connecting the evaporator (5) to the defrost receiver (6) via defrost valve (10) to allow hot fluid to pass from the defrost receiver to the evaporator and liquid refrigerant in the evaporator flows to the defrost receiver (6) via drain valve (9). In a pre defrost phase the valve arrangement closes the fluid input to the evaporator (5) and the compressor operates to partially evacuate the evaporator before the evaporator is connected to the defrost receiver so that flash flooding of the evaporator with hot vapour occurs. A phase change medium (11) may be included to store heat from the condenser output and return it to the evaporator during defrost. Additional heat may be supplied to the defrost liquid to further increase the defrost speed.

No. of Pages : 20 No. of Claims : 9

(12) PATENT APPLICATION PUBLICATION
(19) INDIA
(22) Date of filing of Application :22/07/2013
(21) Application No.6540/DELNP/2013 A
(43) Publication Date : 19/12/2014

(54) Title of the invention : CONTAINER FOR THE PREPARATION OF BEVERAGE COMPRISING AN IMPROVED PERFORABLE FOIL AND METHOD FOR PREPARING A BEVERAGE

(51) International classification :B65D85/804
(31) Priority Document No :11154643.8
(32) Priority Date :16/02/2011
(33) Name of priority country :EPO
(86) International Application No :PCT/EP2012/051733
Filing Date :02/02/2012
(87) International Publication No :WO 2012/110323
(61) Patent of Addition to Application Number :NA
Filing Date :NA
(62) Divisional to Application Number :NA
Filing Date :NA

(71)**Name of Applicant :**
1)NESTEC S.A.
Address of Applicant :Av. Nestl 55 CH 1800 Vevey Switzerland
(72)**Name of Inventor :**
1)GERBAULET Arnaud
2)ABEGGLEN Daniel
3)PELLETIER Sbastien
4)PERENTES Alexandre
5)BENZ Patrick

(57) Abstract :
A portioned container (1) for the preparation of a beverage in a beverage producing device comprising a body (2) having a main cavity (3) and a foil (6) connected to the body for closing said main cavity; said main cavity (3) containing beverage ingredients (5) wherein the foil (6) is perforable in axial direction above the cavity by an elongated intruding member (15) of the beverage preparation device wherein the foil (6) comprises at least a base layer (7) and at least a tightness producing layer (8); said tightness producing layer (8) constituting an inner layer underneath the base layer (7); wherein said tightness producing layers (8) and said base layer (7) are adhesively bonded above the cavity (3) at least in a first region (9) of the foil and are free of adhesive bond in at least a second region (10) or tightness producing region of the foil such second region being the region intended for being perforated by the elongated intruding member (15) forming a tightness engagement with the surface of the elongated intruding member (15).

No. of Pages : 22 No. of Claims : 15

(12) PATENT APPLICATION PUBLICATION
(19) INDIA
(22) Date of filing of Application :09/09/2013
(21) Application No.7901/DELNP/2013 A
(43) Publication Date : 19/12/2014

(54) Title of the invention : 6 SUBSTITUTED ESTRADIOL DERIVATIVES FOR USE IN REMYELINATION OF NERVE AXONS

(51) International classification :A61K31/56,A61K31/565,A61K31/57
(31) Priority Document No :61/454873
(32) Priority Date :21/03/2011
(33) Name of priority country :U.S.A.
(86) International Application No :PCT/US2012/029973
Filing Date :21/03/2012
(87) International Publication No :WO 2012/129324
(61) Patent of Addition to Application Number :NA
Filing Date :NA
(62) Divisional to Application Number :NA
Filing Date :NA

(71)**Name of Applicant :**
1)ENDECE LLC
Address of Applicant :1001 West Glen Oaks Lane Suite 105 B Mequon WI 53092 U.S.A.
(72)**Name of Inventor :**
1)YARGER James G.
2)NYE Steve

(57) Abstract :
Disclosed is a method of remyelinating axons with 6 substituted estradiol compounds of the formula. The method can be used to treat a variety of demyelinating diseases

No. of Pages : 55 No. of Claims : 14

(12) PATENT APPLICATION PUBLICATION
(19) INDIA
(22) Date of filing of Application :09/09/2013
(21) Application No.7902/DELNP/2013 A
(43) Publication Date : 19/12/2014

(54) Title of the invention : ISOXAZOLE DERIVATIVES USEFUL AS ANTIBACTERIAL AGENTS

(51) International classification :C07D261/08,C07D413/04,A61K31/42
(31) Priority Document No :61/473540
(32) Priority Date :08/04/2011
(33) Name of priority country :U.S.A.
(86) International Application No :PCT/IB2012/051406
Filing Date :23/03/2012
(87) International Publication No :WO 2012/137094
(61) Patent of Addition to Application Number :NA
Filing Date :NA
(62) Divisional to Application Number :NA
Filing Date :NA

(71)**Name of Applicant :**
1)PFIZER INC.
Address of Applicant :235 East 42nd Street New York NY 10017 U.S.A.
(72)**Name of Inventor :**
1)ABRAMITE Joseph A.
2)BROWN Matthew F.
3)CHEN Jinshan Michael
4)MELNICK Michael
5)MONTGOMERY Justin I.
6)REILLY Usa

(57) Abstract :
The present invention is directed to a new class of hydroxamic acid derivatives of formula (I) or formula (II) their use as Lpx C inhibitors and more specifically their use to treat bacterial infections.

No. of Pages : 60 No. of Claims : 14

(12) PATENT APPLICATION PUBLICATION
(19) INDIA
(22) Date of filing of Application :09/09/2013
(21) Application No.7903/DELNP/2013 A
(43) Publication Date : 19/12/2014

(54) Title of the invention : ELECTRICALLY DRIVEN DUMP TRUCK

(51) International classification :B60L5/14,B60L3/00,B60L5/16
(31) Priority Document No :2011110767
(32) Priority Date :17/05/2011
(33) Name of priority country :Japan
(86) International Application No :PCT/JP2012/059408
Filing Date :05/04/2012
(87) International Publication No :WO 2012/157364
(61) Patent of Addition to Application Number :NA
Filing Date :NA
(62) Divisional to Application Number :NA
Filing Date :NA

(71)**Name of Applicant :**
1)HITACHI CONSTRUCTION MACHINERY CO. LTD.
Address of Applicant :5 1 Koraku 2 chome Bunkyo ku Tokyo 1128563 Japan
(72)**Name of Inventor :**
1)SAITO Shinjiro
2)NAKAJIMA Kichio

(57) Abstract :
According to the present invention a vehicle control unit (50) a controller (100) an inverter control unit (30) and a steering control unit (32) constitute a control unit (200) that controls elevation of sliders (4La 4Ra) of current collectors (4L 4R) based on data detected by a trolley line sensing device (camera) (15). The control unit (200) calculates a positional relation between the sliders and trolley lines (3L 3R) based on the data detected by the trolley line sensing device. If the sliders are out of a predetermined range of contact with the trolley line operation to elevate the sliders is prohibited. If the sliders have been already elevated the sliders are controlled so as to be lowered. In this way an electrically driven dump truck is provided which can reduce the operational burden of a driver during trolley driving.

No. of Pages : 97 No. of Claims : 5

(12) PATENT APPLICATION PUBLICATION
(19) INDIA
(22) Date of filing of Application :09/09/2013

(21) Application No.7904/DELNP/2013 A
(43) Publication Date : 19/12/2014

(54) Title of the invention : FORMULATIONS COMPRISING 2 AMINO 2 [2 (4 OCTYLPHENYL) ETHYL] PROPANE 1 3 DIOL

(51) International classification :A61K9/16,A61K31/137,A61P37/06
(31) Priority Document No :61/470747
(32) Priority Date :01/04/2011
(33) Name of priority country:U.S.A.
(86) International Application No :PCT/US2012/031340
Filing Date :30/03/2012
(87) International Publication No :WO 2012/135561
(61) Patent of Addition to Application Number :NA
Filing Date :NA
(62) Divisional to Application Number :NA
Filing Date :NA

(71)**Name of Applicant :**
1)NOVARTIS AG
Address of Applicant :Lichstrasse 35 CH 4056 Basel Switzerland
(72)**Name of Inventor :**
1)RANE Supriya

(57) Abstract :
A solid pharmaceutical composition suitable for oral administration comprising: (a) a S1P receptor modulator; (b) a filler and (c) a cyclodextrin.

No. of Pages : 23 No. of Claims : 10

(12) PATENT APPLICATION PUBLICATION
(19) INDIA
(22) Date of filing of Application :09/09/2013
(21) Application No.7905/DELNP/2013 A
(43) Publication Date : 19/12/2014

(54) Title of the invention : METHOD AND SYSTEM FOR DETERMINING AN AMOUNT OF A LIQUID ENERGY COMMODITY IN STORAGE IN AN UNDERGROUND CAVERN

(51) International classification	:G01V9/00,G06F19/00,G06Q50/02
(31) Priority Document No	:61/448439
(32) Priority Date	:02/03/2011
(33) Name of priority country	:U.S.A.
(86) International Application No	:PCT/US2012/027437
Filing Date	:02/03/2012
(87) International Publication No	:WO 2012/119054
(61) Patent of Addition to Application Number	:NA
Filing Date	:NA
(62) Divisional to Application Number	:NA
Filing Date	:NA

(71)**Name of Applicant :**
1)GENSCAPE INTANGIBLE HOLDING INC.
Address of Applicant :Suite 200 445 East Market Street Louisville KY 40202 U.S.A.
(72)**Name of Inventor :**
1)OLSON Susan
2)ALPHENAAR Deirdre
3)ZEIN Abudi
4)FUCHS Jason

(57) Abstract :
A method for determining an amount of a liquid energy commodity in storage in an underground cavern generally comprises the steps of: establishing a volume function for a brine pond associated with the underground cavern; acquiring an image of the brine pond; transmitting the acquired image to a central processing facility; analyzing the acquired image to calculate a depth of the brine in the brine pond; estimating the volume of the brine in the brine pond based on the calculated depth and using the volume function; determining the amount of the liquid energy commodity in storage in the underground cavern associated with the brine pond based on the estimated volume of the brine in the brine pond; and communicating information about the amount of the liquid energy commodity in storage to a third party market participant.

No. of Pages : 34 No. of Claims : 11

(12) PATENT APPLICATION PUBLICATION
(19) INDIA
(22) Date of filing of Application :22/07/2013
(21) Application No.6519/DELNP/2013 A
(43) Publication Date : 19/12/2014

(54) Title of the invention : STEEL PIPE WITH CONCAVITIES AND COMPOSITE PILE

(51) International classification :E02D5/28,B21D17/04,E02D5/30
(31) Priority Document No :2011035535
(32) Priority Date :22/02/2011
(33) Name of priority country :Japan
(86) International Application No :PCT/JP2012/054246
Filing Date :22/02/2012
(87) International Publication No :WO 2012/115138
(61) Patent of Addition to Application Number :NA
Filing Date :NA
(62) Divisional to Application Number :NA
Filing Date :NA

(71)**Name of Applicant :**
1)NIPPON STEEL & SUMITOMO METAL CORPORATION
Address of Applicant :6 1 Marunouchi 2 chome Chiyoda ku Tokyo 1008071 Japan
(72)**Name of Inventor :**
1)TAKAGI Masahide
2)TAENAKA Shinji
3)SATOH Tetsu
4)MOTEGI Yuki
5)OOSAWA Takashi

(57) Abstract :
The present invention provides a steel pipe with concavities wherein a plurality of concavity parts is formed on the outer circumference face of a steel pipe such that a line is formed in the steel pipe axis direction. Within each of the concavity parts a columnar depression part is formed which makes a depression deeper even than the bottom faces of the concavity parts and which follows the steel pipe axis direction. The ratio of the average Vickers hardness (H) in each of the concavity parts and the Vickers hardness (H) in the portions between concavity parts which are adjacent to one another in the steel pipe axis direction satisfies the formula $0.95 \leq HA/HB \leq 1.05$. Hot scale skin is provided on the outer circumference face.

No. of Pages : 48 No. of Claims : 10

(12) PATENT APPLICATION PUBLICATION
(19) INDIA
(22) Date of filing of Application :04/09/2013
(21) Application No.7789/DELNP/2013 A
(43) Publication Date : 19/12/2014

(54) Title of the invention : OPTICAL MEASUREMENT METHOD AND MEASUREMENT SYSTEM FOR DETERMINING 3D COORDINATES ON A MEASUREMENT OBJECT SURFACE

(51) International classification :G01B11/25,G01S17/42,G06T7/00
(31) Priority Document No :11166780.4
(32) Priority Date :19/05/2011
(33) Name of priority country :EPO
(86) International Application No :PCT/EP2012/059120
Filing Date :16/05/2012
(87) International Publication No :WO 2012/156448
(61) Patent of Addition to Application Number :NA
Filing Date :NA
(62) Divisional to Application Number :NA
Filing Date :NA

(71)**Name of Applicant :**
1)HEXAGON TECHNOLOGY CENTER GMBH
Address of Applicant :Heinrich Wild Strasse CH 9435 Heerbrugg Switzerland
(72)**Name of Inventor :**
1)SIERCKS Knut

(57) Abstract :
The invention relates to an optical measurement method for determining 3D coordinates of a plurality of measurement points on a measurement object surface (1s). To this end the measurement object surface (1s) is illuminated with a pattern sequence of different patterns (2a) by a projector (3) an image sequence of the measurement object surface (1s) illuminated with the pattern sequence is recorded with a camera system and the 3D coordinates of the measurement points are determined by evaluating the image sequence in particular wherein a succession of brightness values for identical measurement points on the measurement object surface (1s) is ascertained in respective images of the recorded image sequence. According to the invention translational and/or rotational accelerations of the projector (3) of the camera system and/or of the measurement object (1) are measured here and in dependence on the measured accelerations the illumination of the measurement object surface (1s) and/or the recording of the image sequence is/are reactively adapted in particular temporally substantially directly and live during the measurement process.

No. of Pages : 55 No. of Claims : 15

(12) PATENT APPLICATION PUBLICATION
(19) INDIA
(22) Date of filing of Application :09/09/2013
(21) Application No.7913/DELNP/2013 A
(43) Publication Date : 19/12/2014

(54) Title of the invention : MICROBIAL PRODUCTION OF 3 4 DIHYDROXYBUTYRATE (3 4 DHBA) 2 3 DIHYDROXYBUTYRATE (2 3 DHBA) AND 3 HYDROXYBUTYROLACTONE (3 HBL)

(51) International classification :C12R1/19,C12N5/10,C12P7/42
(31) Priority Document No :61/446998
(32) Priority Date :25/02/2011
(33) Name of priority country :U.S.A.
(86) International Application No :PCT/US2012/026577
Filing Date :24/02/2012
(87) International Publication No :WO 2012/116307
(61) Patent of Addition to Application Number :NA
Filing Date :NA
(62) Divisional to Application Number :NA
Filing Date :NA

(71)**Name of Applicant :**
1)MASSACHUSETTS INSTITUTE OF TECHNOLOGY
Address of Applicant :77 Massachusetts Avenue Cambridge MA 02139 U.S.A.
(72)**Name of Inventor :**
1)DHAMANKAR Himanshu Hemant
2)MARTIN Collin Hunter
3)PRATHER Kristala Lanett Jones

(57) Abstract :
The invention relates to recombinant cells and their use in the production of 3 4 dihydroxybutyrate 2 3 dihydroxybutyrate and 3 hydroxybutyrolactone.

No. of Pages : 82 No. of Claims : 61

(12) PATENT APPLICATION PUBLICATION
(19) INDIA
(22) Date of filing of Application :09/09/2013
(21) Application No.7914/DELNP/2013 A
(43) Publication Date : 19/12/2014

(54) Title of the invention : APPARATUS AND PROCESS FOR PRODUCTION OF AN ENCAPSULATED CELL PRODUCT

(51) International classification :C12M1/00
(31) Priority Document No :13/027267
(32) Priority Date :14/02/2011
(33) Name of priority country :U.S.A.
(86) International Application No :PCT/US2012/025131
Filing Date :14/02/2012
(87) International Publication No :WO 2012/112617
(61) Patent of Addition to Application Number :NA
Filing Date :NA
(62) Divisional to Application Number :NA
Filing Date :NA

(71)**Name of Applicant :**
1)GEOSYNFUELS LLC
Address of Applicant :14818 West 6th Avenue Unit A1 Golden CO 80401 U.S.A.
(72)**Name of Inventor :**
1)BECKLER ANDERSEN Lisa
2)EVANS IV John H.
3)SINGER Christine A.

(57) Abstract :
A process for production of an encapsulated cell product the process comprises the steps of concentrating cells from a propagation medium using a tangential flow filtration system. Mixing the concentrated cells with an encapsulation medium to form a cell encapsulation mixture. Polymerizing gelling or cross linking the cell encapsulation mixture to form an encapsulated cell product.

No. of Pages : 55 No. of Claims : 39

(12) PATENT APPLICATION PUBLICATION
(19) INDIA
(22) Date of filing of Application :09/09/2013
(21) Application No.7915/DELNP/2013 A
(43) Publication Date : 19/12/2014

(54) Title of the invention : USE OF A VEGETABLE EXTRACT AS AN ACTIVE PRINCIPLE IN THE PRODUCTION OF A PHARMACOLOGICALLY ACTIVE PRODUCT FOR THE TREATMENT OF TISSUE LESIONS AND METHOD FOR OBTAINING SAID EXTRACT

(51) International classification :A61K36/60,A61P19/00,A61P19/04
(31) Priority Document No :P201100167
(32) Priority Date :16/02/2011
(33) Name of priority country :Spain
(86) International Application No :PCT/ES2012/000032
Filing Date :16/02/2012
(87) International Publication No :WO 2012/110674
(61) Patent of Addition to Application Number :NA
Filing Date :NA
(62) Divisional to Application Number :NA
Filing Date :NA

(71)**Name of Applicant :**
1)SAINZ PRESTEL Valeria Lucila
Address of Applicant :Calle Santiago Am³n No. 31 4to A 28231 Las Rozas de Mdrid Spain
(72)**Name of Inventor :**
1)SAINZ PRESTEL Valeria Lucila

(57) Abstract :
The invention relates to the use of a resin extract from the Ficus pertusa L.f and/or Ficus eximia Schott tree as an active principle in the production of a pharmacologically active product for the treatment of acute and/or chronic tissue lesions in both bone tissue and soft tissue. The invention also relates to the method for obtaining said extract.

No. of Pages : 18 No. of Claims : 14

(12) PATENT APPLICATION PUBLICATION
(19) INDIA
(22) Date of filing of Application :22/07/2013
(21) Application No.6520/DELNP/2013 A
(43) Publication Date : 19/12/2014

(54) Title of the invention : ATTACHMENT OF INSULATING PANELS ONTO A SUPPORTING WALL IN A REPEATING PATTERN

(51) International classification :F17C3/02
(31) Priority Document No :1151651
(32) Priority Date :01/03/2011
(33) Name of priority country :France
(86) International Application No :PCT/FR2012/050314
Filing Date :14/02/2012
(87) International Publication No :WO 2012/117180
(61) Patent of Addition to Application Number :NA
Filing Date :NA
(62) Divisional to Application Number :NA
Filing Date :NA

(71)**Name of Applicant :**
1)GAZTRANSPORT ET TECHNIGAZ
Address of Applicant :1 route de Versailles F 78470 Saint Remy Les Chevreuse France
(72)**Name of Inventor :**
1)GAZEAU James

(57) Abstract :
The invention relates to a sealed insulating vessel particularly for liquefied natural gas comprising: a supporting wall (1) having anchoring members (2) arranged in a repeating pattern; a sealing barrier that is to be in contact with a material contained in the vessel; and a thermally insulating barrier arranged between the sealing barrier and the supporting wall the thermally insulating barrier comprising a plurality of insulating panels (30 33) arranged in the repeating pattern an insulating panel being attached each time to the supporting wall by an adhesive (46) placed onto a bottom surface of the insulating panel and one or more anchoring members of the supporting wall engaging each time with a bore (45 47) passing through the insulating panel. The number of anchoring members per insulating panel is between 1 and 6 preferably between 2 and 3. A method for attaching the insulating panels involves using a clamping tool (40 44).

No. of Pages : 25 No. of Claims : 13

(12) PATENT APPLICATION PUBLICATION
(19) INDIA
(22) Date of filing of Application :22/07/2013
(21) Application No.6521/DELNP/2013 A
(43) Publication Date : 19/12/2014

(54) Title of the invention : MOLD TOOL SYSTEM INCLUDING RUNNER ASSEMBLY CONFIGURED TO PROVIDE ACCESS PORTAL FOR PERMITTING ACCESS TO ASSEMBLY

(51) International classification :B29C33/20
(31) Priority Document No :61/443735
(32) Priority Date :17/02/2011
(33) Name of priority country :U.S.A.
(86) International Application No :PCT/US2012/025330
Filing Date :16/02/2012
(87) International Publication No :WO 2012/112732
(61) Patent of Addition to Application Number :NA
Filing Date :NA
(62) Divisional to Application Number :NA
Filing Date :NA

(71)**Name of Applicant :**
1)HUSKY INJECTION MOLDING SYSTEMS LTD
Address of Applicant :500 Queen Street South Bolton Ontario L7E 5S5 Canada
(72)**Name of Inventor :**
1)METZ Philipe Alexandre
2)DEZON GAILLARD Patrice Fabien
3)OVERFIELD Sarah Kathleen

(57) Abstract :
A mold tool system (100) comprising: an assembly (101); and a runner assembly (600) supporting the assembly (101). The runner assembly (600) is configured to provide an access portal (103) configured to permit access to the assembly (101) by a removal assembly (105) so that the assembly (101) may be removed from the runner assembly (600) and replaced. The assembly (101) includes: a position adjustment assembly (102) configured to interact with a stem actuation plate (606) connected with a stem assembly (609) of a nozzle assembly (620). The position adjustment assembly (102) configured to adjust an amount of stem protrusion (794) of the stem assembly (609) relative to a mold assembly (700). The runner assembly (600) supports actuatable movement of the stem actuation plate (606). Access portal (103) configured to permit access to the position adjustment assembly (102).

No. of Pages : 31 No. of Claims : 14

(12) PATENT APPLICATION PUBLICATION
(19) INDIA
(22) Date of filing of Application :22/07/2013
(21) Application No.6522/DELNP/2013 A
(43) Publication Date : 19/12/2014

(54) Title of the invention : ORAL CARE DEVICES AND SYSTEMS

(51) International classification :A61C17/02
(31) Priority Document No :61/435862
(32) Priority Date :25/01/2011
(33) Name of priority country :U.S.A.
(86) International Application No :PCT/US2012/022326
Filing Date :24/01/2012
(87) International Publication No :WO 2012/103066
(61) Patent of Addition to Application Number :NA
Filing Date :NA
(62) Divisional to Application Number :NA
Filing Date :NA

(71)**Name of Applicant :**
1)MCNEIL PPC INC.
Address of Applicant :199 Grandview Road Skillman NJ 08558 U.S.A.
(72)**Name of Inventor :**
1)MCDONOUGH Justin E.
2)FOUGERE Richard J.
3)FUSI Robert W.

(57) Abstract :
A system and device for providing a beneficial effect to the oral cavity of a mammal the system including means for directing a fluid effective to provide the beneficial effect onto a plurality of surfaces of the oral cavity; and the hand held device the hand held device being suitable for providing the fluid to the directing means and including means for providing reciprocation of the fluid means for controlling the reciprocation of the fluids means for conveying the fluid through the device system a reservoir for containing the fluid a power source and a linear motor.

No. of Pages : 72 No. of Claims : 13

(12) PATENT APPLICATION PUBLICATION
(19) INDIA
(22) Date of filing of Application :22/07/2013
(21) Application No.6524/DELNP/2013 A
(43) Publication Date : 19/12/2014

(54) Title of the invention : A METHOD FOR ATTACHING AN ELECTRONIC ASSEMBLY TO A BOTTOM OVERLAY IN THE MANUFACTURE OF AN ELECTRONIC DEVICE

(51) International classification :B29C45/14,B29L9/00,B29L7/00
(31) Priority Document No :61/433724
(32) Priority Date :18/01/2011
(33) Name of priority country :U.S.A.
(86) International Application No :PCT/US2012/021524
Filing Date :17/01/2012
(87) International Publication No :WO 2012/099863
(61) Patent of Addition to Application Number :NA
Filing Date :NA
(62) Divisional to Application Number :NA
Filing Date :NA

(71)**Name of Applicant :**
1)INNOVATIER INC.
Address of Applicant :2769 New Tampa HWY Lakeland FL 33815 U.S.A.
(72)**Name of Inventor :**
1)SINGLETON Robert

(57) Abstract :
A method for adhering an electronic assembly to a bottom cover sheet in the manufacture of an electronic device is presented. According to the method the electronic assembly is attached to the bottom overlay using a modified ultra violet (UV) cured adhesive.

No. of Pages : 14 No. of Claims : 2

(12) PATENT APPLICATION PUBLICATION
(19) INDIA
(22) Date of filing of Application :10/09/2013
(21) Application No.7931/DELNP/2013 A
(43) Publication Date : 19/12/2014

(54) Title of the invention : NEEDLE ASSEMBLY AND INJECTION DEVICE WITH FOLDABLE NEEDLE PROTECTING MEANS

(51) International classification :A61M5/32
(31) Priority Document No :11305423.3
(32) Priority Date :11/04/2011
(33) Name of priority country :EPO
(86) International Application No :PCT/EP2012/001544
Filing Date :10/04/2012
(87) International Publication No :WO 2012/139745
(61) Patent of Addition to Application Number :NA
Filing Date :NA
(62) Divisional to Application Number :NA
Filing Date :NA

(71)**Name of Applicant :**
1)BECTON DICKINSON FRANCE
Address of Applicant :Rue Aristide Berges F 38800 Le Pont de Claix France
(72)**Name of Inventor :**
1)PEROT Frdric
2)GRUNHUT Guillaume
3)PLOUVIER Adrien

(57) Abstract :
The present invention relates to a needle assembly (1) comprising : a needle hub (4) having a needle (5) with a distal tip (6) a ring (42) for protecting the needle in one of a storage condition or end of use condition of the needle assembly foldable means (40) for moving the protective ring biasing means (30) for urging the foldable means from their folded configuration to their unfolded configuration retaining means for maintaining the biasing means in an intermediate stressed state at least in the storage condition of the needle assembly deactivating means (47a) for releasing said retaining means at least at the end of the injection step. The invention also relates to an injection device (3) comprising such a needle assembly and a container (2).

No. of Pages : 33 No. of Claims : 19

(12) PATENT APPLICATION PUBLICATION
(19) INDIA
(22) Date of filing of Application :09/09/2013
(21) Application No.7908/DELNP/2013 A
(43) Publication Date : 19/12/2014

(54) Title of the invention : SINGLE PH PROCESS FOR STARCH LIQUEFACTION AND SACCHARIFICATION FOR HIGH DENSITY GLUCOSE SYRUPS

(51) International classification :C12P19/20,C12N9/24
(31) Priority Document No :61/481084
(32) Priority Date :29/04/2011
(33) Name of priority country :U.S.A.
(86) International Application No :PCT/US2012/035413
Filing Date :27/04/2012
(87) International Publication No :WO 2012/149288
(61) Patent of Addition to Application Number :NA
Filing Date :NA
(62) Divisional to Application Number :NA
Filing Date :NA

(71)**Name of Applicant :**
1)DANISCO US INC.
Address of Applicant :925 Page Mill Road Palo Alto California 94304 U.S.A.
(72)**Name of Inventor :**
1)LEE Sung Ho
2)SHETTY Jayarama K.
3)TEUNISSEN Paula Johanna Maria

(57) Abstract :
Embodiments of the present disclosure relate to a process for producing downstream products such as high density glucose syrups and high glucose fermentation feedstock from a starch containing substrate without a pH adjustment before the saccharification step. The saccharification is effectively catalyzed by a glucoamylase at a pH in the range of 5.2 to 5.6.

No. of Pages : 41 No. of Claims : 19

(12) PATENT APPLICATION PUBLICATION
(19) INDIA
(22) Date of filing of Application :09/09/2013
(21) Application No.7909/DELNP/2013 A
(43) Publication Date : 19/12/2014

(54) Title of the invention : AZOLE DERIVATIVE

(51) International classification :C07D403/04,A61K31/4155,A61K31/4196
(31) Priority Document No :2011056149
(32) Priority Date :15/03/2011
(33) Name of priority country :Japan
(86) International Application No :PCT/JP2012/056624
Filing Date :15/03/2012
(87) International Publication No :WO 2012/124750
(61) Patent of Addition to Application Number :NA
Filing Date :NA
(62) Divisional to Application Number :NA
Filing Date :NA

(71)**Name of Applicant :**
1)TAISHO PHARMACEUTICAL CO. LTD.
Address of Applicant :24 1 Takada 3 chome Toshima ku Tokyo 1708633 Japan
(72)**Name of Inventor :**
1)ONO Naoya
2)KURODA Shoichi
3)SHIRASAKI Yoshihisa
4)TAKAYAMA Tetsuo
5)SEKIGUCHI Yoshinori
6)USHIYAMA Fumihito
7)OKA Yusuke

(57) Abstract :
Provided are: a novel compound which binds to FKBP12 or a pharmaceutically acceptable salt thereof; and a novel therapeutic agent which contains the compound or a pharmaceutically acceptable salt thereof and is useful for the prophylaxis or treatment of alopecia. Specifically provided is a compound which is represented by formula (1) or a pharmaceutically acceptable salt thereof. (In formula (1) R represents a group represented by formula (2) or formula (3).)

No. of Pages : 95 No. of Claims : 10

(12) PATENT APPLICATION PUBLICATION
(19) INDIA
(22) Date of filing of Application :09/09/2013
(21) Application No.7910/DELNP/2013 A
(43) Publication Date : 19/12/2014

(54) Title of the invention : AN IMPROVED HUNGRY BOARD ASSEMBLY

(51) International classification :B60P1/28
(31) Priority Document No :2011900430
(32) Priority Date :10/02/2011
(33) Name of priority country :Australia
(86) International Application No :PCT/AU2012/000132
Filing Date :10/02/2012
(87) International Publication No :WO 2012/106774
(61) Patent of Addition to Application Number :NA
Filing Date :NA
(62) Divisional to Application Number :NA
Filing Date :NA

(71)**Name of Applicant :**
1)FSP MINING COMPONENTS PTY LTD
Address of Applicant :32 Computer Road Yatala Queensland 4207 Australia
(72)**Name of Inventor :**
1)ANNETTS Richard

(57) Abstract :
Hungry boards or spill boards for mounting about a tip truck load carrying body are formed with a pair of spaced apart vertical bores corresponding to and depending downward from the access cutouts. Vertical bores formed through the hungry board receive the threaded end of an anchor bolt which is welded to lip of the body. The anchor bolt comprises part of a resilient fastening system for attachment of the hungry board the anchor bolt is formed with a flat foot from which a shank extends. The shank terminates upwardly in a threaded upper end. A compression spring is located about the shank and arranged to absorb impact forces directed at the hungry board during use. The hungry boards are made of a light weight resilient material such as a tough synthetic rubber.

No. of Pages : 27 No. of Claims : 18

(12) PATENT APPLICATION PUBLICATION
(19) INDIA
(22) Date of filing of Application :09/09/2013
(21) Application No.7911/DELNP/2013 A
(43) Publication Date : 19/12/2014

(54) Title of the invention : METHODS AND COMPOSITIONS FOR SILENCING GENE FAMILIES USING ARTIFICIAL MICRORNAS

(51) International classification	:C12N15/11,C12N15/82,A01H5/00
(31) Priority Document No	:61/484033
(32) Priority Date	:09/05/2011
(33) Name of priority country	:U.S.A.
(86) International Application No	:PCT/US2012/037083
Filing Date	:09/05/2012
(87) International Publication No	:WO 2012/154824
(61) Patent of Addition to Application Number	:NA
Filing Date	:NA
(62) Divisional to Application Number	:NA
Filing Date	:NA

(71)**Name of Applicant :**
1)E. I. DU PONT DE NEMOURS AND COMPANY
Address of Applicant :1007 Market Street Wilmington Delaware 19899 U.S.A.
(72)**Name of Inventor :**
1)MCGONIGLE Brian

(57) Abstract :
Methods and compositions are provided which allow for a single microRNA (miRNA) to reduce the level of expression of at least two members of the same protein and/or gene family. While a single 21 base pair miRNA can cause cleavage of a variety of species of mRNAs an entire gene family cannot be silenced unless that gene family shares near identity within a 21 base pair region that is also able to be cleaved by a single miRNA. In certain embodiments all members of a given protein and/or gene family can be suppressed with a miRNA expression construct disclosed herein even if they do not share near identity within a 21 base pair region that is also able to function as a miRNA. Such methods and compositions employ miRNA expression constructs having a structure such that the most abundant form of miRNA produced from the construct is a 22 nucleotide miRNA. The 22 nucleotide miRNA produced from the miRNA expression construct thereby reduces the level of expression of not only the target sequence for the miRNA but also reduces the level of expression of at least one additional sequence from the same protein and/or gene family as the target sequence.

No. of Pages : 91 No. of Claims : 42

(12) PATENT APPLICATION PUBLICATION
(19) INDIA
(22) Date of filing of Application :09/09/2013
(21) Application No.7912/DELNP/2013 A
(43) Publication Date : 19/12/2014

(54) Title of the invention : CRANE CONTROL METHOD OF SAME AND CONTROL PROGRAM

(51) International classification :B66C13/30
(31) Priority Document No :2011251499
(32) Priority Date :17/11/2011
(33) Name of priority country :Japan
(86) International Application No :PCT/JP2012/050944
Filing Date :18/01/2012
(87) International Publication No :WO 2013/073203
(61) Patent of Addition to Application Number :NA
Filing Date :NA
(62) Divisional to Application Number :NA
Filing Date :NA

(71)**Name of Applicant :**
1)MITSUBISHI HEAVY INDUSTRIES MACHINERY TECHNOLOGY CORPORATION
Address of Applicant :6 22 Kan on shin machi 4 chome Nishi ku Hiroshima shi Hiroshima 7338553 Japan
(72)**Name of Inventor :**
1)FUJISAWA Noboru
2)SUMA Yasutaka

(57) Abstract :
An inverter for a crane is rapidly stopped and rapidly separated from a circuit in the event of an anomaly. Provided are a motor (11) an inverter (12) provided correspondingly with respect to the motor (11) a converter (13) for converting AC power supplied by an AC power supply to DC power and supplying DC power to the inverter (12) a power consumption unit (21) connected between the converter (13) and the inverter (12) for consuming DC power from the converter (13) and a first switching unit (MC1) connected between the power consumption unit (21) and the converter (13) for switching between connection and separation of the power consumption unit (21) and the converter (13).

No. of Pages : 29 No. of Claims : 7

(12) PATENT APPLICATION PUBLICATION
(19) INDIA
(22) Date of filing of Application :23/07/2013
(21) Application No.6560/DELNP/2013 A
(43) Publication Date : 19/12/2014

(54) Title of the invention : METHOD FOR PRODUCING 2 2 DIFLUOROETHYLAMINE STARTING FROM 2 2 DIFLUORO 1 CHLOROETHANE

(51) International classification	:C07C209/08,C07C209/62,C07C211/15
(31) Priority Document No	:11151873.4
(32) Priority Date	:24/01/2011
(33) Name of priority country	:EPO
(86) International Application No Filing Date	:PCT/EP2012/050834 :20/01/2012
(87) International Publication No	:WO 2012/101044
(61) Patent of Addition to Application Number Filing Date	:NA :NA
(62) Divisional to Application Number Filing Date	:NA :NA

(71)**Name of Applicant :**
1)BAYER INTELLECTUAL PROPERTY GMBH
Address of Applicant :Alfred Nobel Strasse 10 40789 Monheim Germany
(72)**Name of Inventor :**
1)LUI Norbert
2)HEINRICH Jens Dietmar

(57) Abstract :
The invention relates to a method for producing 2 2 difluoroethylamine comprising reacting 2 2 difluoro 1 chloroethane with an imide of formula (II) in the presence of an acid scavenger in order to form a compound of formula (III) wherein in the compounds of formulas (II) and (III) R and R stand independently of each other for hydrogen or C C alkyl or R and R together with the carbon atoms to which they are bonded form a six membered aromatic ring which is optionally substituted; and splitting off 2 2 difluoroethylamine by reacting the compound of formula (III) with acid base or hydrazine.

No. of Pages : 16 No. of Claims : 12

(12) PATENT APPLICATION PUBLICATION
(19) INDIA
(22) Date of filing of Application :23/07/2013
(21) Application No.6561/DELNP/2013 A
(43) Publication Date : 19/12/2014

(54) Title of the invention : ELECTRONICS DEVICE WITH DEEP POWER CONSERVATION MODE VIA DIRECT OR GENERATED SIGNAL APPLICATION AND METHOD FOR EMPLOYING SUCH AN ELECTRONICS DEVICE

(51) International classification	:G01N27/327,G01N33/487,H02J7/00
(31) Priority Document No	:13/014453
(32) Priority Date	:26/01/2011
(33) Name of priority country	:U.S.A.
(86) International Application No	:PCT/US2012/021444
Filing Date	:16/01/2012
(87) International Publication No	:WO 2012/102891
(61) Patent of Addition to Application Number	:NA
Filing Date	:NA
(62) Divisional to Application Number	:NA
Filing Date	:NA

(71)**Name of Applicant :**
1)LIFESCAN INC.
Address of Applicant :1000 Gibraltar Drive Milpitas CA 95035 U.S.A.
(72)**Name of Inventor :**
1)KRAFT Ulrich
2)MASSARI Rossano

(57) Abstract :
An electronics device includes a housing a buttons electrical circuit block at least one user operable button in operable communication with the buttons electrical circuit block a microcontroller block and a first time on (FTO) electrical circuit block. The FTO electrical circuit block is disposed within the housing and includes an activation node and a signal reception contact. In addition the FTO electrical circuit block is configured to place the electronics device into a deep power conservation mode upon either the direct application of an electrical signal to the activation node by an external device (e.g. a manufacturing tester) or a deactivation signal received at the signal reception contact. The FTO electrical circuit block is also configured to terminate the deep power conservation mode and place the electronics device into a normal operating mode upon receiving a predetermined user triggered signal from the at least one user operable button. Moreover the microcontroller block is configured to generate the deactivation signal received at the signal reception contact in response to an external command signal received by the microcontroller block.

No. of Pages : 23 No. of Claims : 20

(12) PATENT APPLICATION PUBLICATION
(19) INDIA
(22) Date of filing of Application :13/09/2013
(21) Application No.8041/DELNP/2013 A
(43) Publication Date : 19/12/2014

(54) Title of the invention : POSITIONING STRUCTURE FOR A FIREARM ON A VEHICLE

(51) International classification :F41A23/34,F41A27/14,B60R21/13
(31) Priority Document No :TO2011A000239
(32) Priority Date :18/03/2011
(33) Name of priority country :Italy
(86) International Application No :PCT/IB2012/000477
Filing Date :13/03/2012
(87) International Publication No :WO 2013/050814
(61) Patent of Addition to Application Number :NA
Filing Date :NA
(62) Divisional to Application Number :NA
Filing Date :NA

(71)**Name of Applicant :**
1)OTO MELARA S.p.A.
Address of Applicant :Via Valdilocchi 15 I 19136 La Spezia (SP) Italy
(72)**Name of Inventor :**
1)IARDELLA Carlo Alberto
2)ARRIGHI Paolo

(57) Abstract :
Positioning structure for an armament on a vehicle equipped with an armoured cockpit (A) and wherein such an armament is constrained to the top of the vehicle. Such a positioning structure engages directly to the frame of the vehicle and in particular to the reinforcement bars (B) typically called roll bars which delimit the armoured cockpit.

No. of Pages : 10 No. of Claims : 7

(12) PATENT APPLICATION PUBLICATION
(19) INDIA
(22) Date of filing of Application :13/09/2013
(21) Application No.8042/DELNP/2013 A
(43) Publication Date : 19/12/2014

(54) Title of the invention : HUMAN TISSUE FACTOR ANTIBODY AND USES THEREOF

(51) International classification :C07K16/36
(31) Priority Document No :61/452674
(32) Priority Date :15/03/2011
(33) Name of priority country :U.S.A.
(86) International Application No :PCT/US2012/028770
Filing Date :12/03/2012
(87) International Publication No :WO 2012/125559
(61) Patent of Addition to Application Number :NA
Filing Date :NA
(62) Divisional to Application Number :NA
Filing Date :NA

(71)**Name of Applicant :**
1)JANSSEN BIOTECH INC.
Address of Applicant :800/850 Ridgeview Drive Horsham PA 19044 U.S.A.
(72)**Name of Inventor :**
1)ALMAGRO Juan Carlos
2)ANDERSON Glenn Mark
3)CHI Ellen
4)MARTINEZ Christian
5)RAGHUNATHAN Gopalan
6)SWANSON Ronald
7)TEPLYAKOV Alexey
8)TSE Kam fai
9)WU Sheng jiun
10)ZHOU Hong Mimi

(57) Abstract :
The invention relates to a humanized form of an antibody capable of preventing tissue factor (coagulation factor F3) signaling but which does not interfere with Factor VII binding or FX binding to tissue factor and does not prolong coagulation time. The antibody of the invention is useful in treating conditions such as tumor progression in which the associated cells express tissue factor and tissue factor signaling occurs.

No. of Pages : 144 No. of Claims : 31

(12) PATENT APPLICATION PUBLICATION
(19) INDIA
(22) Date of filing of Application :13/09/2013
(21) Application No.8043/DELNP/2013 A
(43) Publication Date : 19/12/2014

(54) Title of the invention : POLYMER AND COMPOSITIONS THEREOF

(51) International classification :C08F220/06,C08F8/32,C09D11/00
(31) Priority Document No :61/452335
(32) Priority Date :14/03/2011
(33) Name of priority country :U.S.A.
(86) International Application No :PCT/US2012/028875
Filing Date :13/03/2012
(87) International Publication No :WO 2012/125609
(61) Patent of Addition to Application Number :NA
Filing Date :NA
(62) Divisional to Application Number :NA
Filing Date :NA

(71)**Name of Applicant :**
1)LUBRIZOL ADVANCED MATERIALS INC.
Address of Applicant :9911 Brecksville Road Cleveland Ohio 44141 3247 U.S.A.
(72)**Name of Inventor :**
1)SHOOTER Andrew J.
2)RICHARDS Stuart N.

(57) Abstract :
The invention relates to a composition containing a polymer obtained by polymerising (1) a mono vinyl monomer with one or more carboxylic acid groups to form a polymer with at least 2 to 200 or 5 to 150 or 10 to 100 or 15 to 50 repeat units and (2) reacting the polymer of (1) with a primary hydrocarbyl amine and polyoxyalkylene primary amine (typically polyetheramine). The invention further relates to a composition containing a particulate solid a liquid medium and the polymer. The invention further relates to the use of the polymer as a dispersant.

No. of Pages : 37 No. of Claims : 17

(12) PATENT APPLICATION PUBLICATION
(19) INDIA
(22) Date of filing of Application :13/09/2013
(21) Application No.8044/DELNP/2013 A
(43) Publication Date : 19/12/2014

(54) Title of the invention : A METAL ORGANIC FRAMEWORK WITH OPTIMIZED OPEN METAL SITES AND PORE SPACES FOR HIGH METHANE STORAGE AT ROOM TERMERATURE

(51) International classification :C07F1/08,C07C9/04,B01J3/03
(31) Priority Document No :61/443065
(32) Priority Date :15/02/2011
(33) Name of priority country :U.S.A.
(86) International Application No :PCT/US2012/025206
Filing Date :15/02/2012
(87) International Publication No :WO 2012/112660
(61) Patent of Addition to Application Number :NA
Filing Date :NA
(62) Divisional to Application Number :NA
Filing Date :NA

(71)**Name of Applicant :**
1)BOARD OF REGENTS THE UNIVERSITY OF TEXAS SYSTEM
Address of Applicant :201 West 7th Street 7th Floor Austin Texas 78701 U.S.A.
(72)**Name of Inventor :**
1)CHEN Banglin
2)GUO Zhiyong

(57) Abstract :
A 3D porous metal organic framework and method of making are described. In some embodiments a 3D porous metal organic framework may be based on a trinodal (3 3 4) net of zyg topology by the self assembly of the nonlinear hexacarboxylate (BHB) with the paddle wheel Cu(COO)cluster. Although its porosity and surface area are moderate the open copper sites and optimal pore spaces enable the pore spaces to be fully utilized for methane storage resulting in a high methane storage density and high absolute volumetric methane storage at room temperature and 35 bar. By the immobilization of high density open metal sites and the deliberate control of the pore space for their efficient methane storage this porous MOF functions as an efficient media for methane and natural gas storage.

No. of Pages : 28 No. of Claims : 29

(12) PATENT APPLICATION PUBLICATION
(19) INDIA
(22) Date of filing of Application :13/09/2013
(21) Application No.8045/DELNP/2013 A
(43) Publication Date : 19/12/2014

(54) Title of the invention : HEAT RECEIVER TUBE METHOD FOR MANUFACTURING THE HEAT RECEIVER TUBE PARABOLIC TROUGH COLLECTOR WITH THE RECEIVER TUBE AND USE OF THE PARABOLIC TROUGH COLLECTOR

(51) International classification :F24J2/48,F24J2/07,F24J2/05
(31) Priority Document No :NA
(32) Priority Date : -
(33) Name of priority country :
(86) International Application No :PCT/EP2011/054810
Filing Date :29/03/2011
(87) International Publication No :WO 2012/130283
(61) Patent of Addition to Application Number :NA
Filing Date :NA
(62) Divisional to Application Number :NA
Filing Date :NA

(71)**Name of Applicant :**
1)SIEMENS AKTIENGESELLSCHAFT
Address of Applicant :Wittelsbacherplatz 2 80333 M¼nchen Germany
2)SIEMENS CONCENTRATED SOLAR POWER LTD.
(72)**Name of Inventor :**
1)ARAN Hagai
2)BARKAI Menashe
3)COHEN Gabriel
4)EZER Rami
5)LIPMAN Eli

(57) Abstract :
The invention relates to a heat receiver tube (1) for absorbing solar energy wherein the receiver tube (1) comprises a core tube (10) having at least one first partial heat receiver tube surface (11) at least one second partial heat receiver tube surface (12) and at least one further partial heat receiver tube surface (13) wherein the first partial heat receiver tube surface (11) is formed by a first solar energy absorptive coating (111) deposited on a first partial core tube surface (101) of the core tube (10) for absorbing radiation of a first spectrum of the sunlight wherein the second partial heat receiver tube surface (12) is formed by at least one emission radiation inhibiting coating (14) deposited on a second core tube surface (102) of the core tube (10) wherein the further partial heat receiver tube surface (13) is formed by at least one further solar energy absorptive coating (131) deposited on a further partial core tube surface (103) of the core tube (10) for absorbing radiation (1311) of a further spectrum of the sunlight and wherein the further partial heat receiver tube surface (13) is arranged in a radiation window (1211) of the second partial heat receiver tube surface (12) such that the radiation (1311) can impinge the further partial heat receiver tube surface (13).

No. of Pages : 32 No. of Claims : 24

(12) PATENT APPLICATION PUBLICATION
(19) INDIA
(22) Date of filing of Application :13/09/2013
(21) Application No.8046/DELNP/2013 A
(43) Publication Date : 19/12/2014

(54) Title of the invention : LIQUID CRYSTAL DISPLAY DEVICE

(51) International classification :G02F1/1343,G02F1/1368,G02F1/139
(31) Priority Document No :2011033553
(32) Priority Date :18/02/2011
(33) Name of priority country :Japan
(86) International Application No :PCT/JP2012/053206
Filing Date :07/02/2012
(87) International Publication No :WO 2012/111581
(61) Patent of Addition to Application Number :NA
Filing Date :NA
(62) Divisional to Application Number :NA
Filing Date :NA

(71)**Name of Applicant :**
1)SEMICONDUCTOR ENERGY LABORATORY CO. LTD.
Address of Applicant :398 Hase Atsugi shi Kanagawa 2430036 Japan
(72)**Name of Inventor :**
1)KUBOTA Daisuke
2)YAMASHITA Akio
3)NAKANO Masaru

(57) Abstract :
A liquid crystal display device using a horizontal electric field mode in which contrast ratio is improved is provided. A first polarizing plate having a polarization axis along a first direction a second polarizing plate having a polarization axis along a second direction orthogonal to the first direction a plurality of first structure bodies provided over a first substrate a plurality of second structure bodies provided over the first substrate a first electrode layer covering top surfaces and side surfaces of the plurality of first structure bodies and a second electrode layer covering top surfaces and side surfaces of the plurality of second structure bodies are provided. The side surfaces of the first structure bodies and the side surfaces of the second structure bodies are parallel to the first direction or the second direction. Thus a liquid crystal display device in which contrast ratio is improved can be provided.

No. of Pages : 87 No. of Claims : 12

(12) PATENT APPLICATION PUBLICATION
(19) INDIA
(22) Date of filing of Application :13/09/2013
(21) Application No.8051/DELNP/2013 A
(43) Publication Date : 19/12/2014

(54) Title of the invention : POLYUREA COMPOSITIONS AND METHODS OF USE

(51) International classification :C08G18/52,C08G18/56,C08G18/75
(31) Priority Document No :13/051002
(32) Priority Date :18/03/2011
(33) Name of priority country:U.S.A.
(86) International Application No :PCT/US2012/029447
Filing Date :16/03/2012
(87) International Publication No :WO 2012/141841
(61) Patent of Addition to Application Number :NA
Filing Date :NA
(62) Divisional to Application Number :NA
Filing Date :NA

(71)**Name of Applicant :**
1)PRC DESOTO INTERNATIONAL INC.
Address of Applicant :12780 San Fernando Road Sylmar California 91342 U.S.A.
(72)**Name of Inventor :**
1)HOBBS Stephen J.
2)CAI Juexiao
3)ITO Marfi
4)LIN Renhe

(57) Abstract :
Disclosed are polyurea compositions comprising the reaction products of a polyformal isocyanate prepolymer and a curing agent comprising an amine. The compositions are useful as sealants in aerospace applications.

No. of Pages : 59 No. of Claims : 21

(12) PATENT APPLICATION PUBLICATION
(19) INDIA
(22) Date of filing of Application :13/09/2013
(21) Application No.8052/DELNP/2013 A
(43) Publication Date : 19/12/2014

(54) Title of the invention : MULTIFUNCTIONAL SULFUR CONTAINING POLYMERS COMPOSITIONS THEREOF AND METHODS OF USE

(51) International classification :C08G75/12,C09D181/02,C09J181/02
(31) Priority Document No :61/453978
(32) Priority Date :18/03/2011
(33) Name of priority country :U.S.A.
(86) International Application No :PCT/US2012/029428
Filing Date :16/03/2012
(87) International Publication No :WO 2012/129088
(61) Patent of Addition to Application Number :NA
Filing Date :NA
(62) Divisional to Application Number :NA
Filing Date :NA

(71)**Name of Applicant :**
1)PRC DeSOTO INTERNATIONAL INC.
Address of Applicant :12780 San Fernando Road Sylmar California 91342 U.S.A.
(72)**Name of Inventor :**
1)HOBBS Stephen J.
2)McCOLLUM Gregory J.
3)CAI Juexiao
4)ITO Marfi
5)ANDERSON Lawrence G.
6)LIN Renhe

(57) Abstract :
Disclosed are multifunctional sulfur containing polymers that are the reaction products of a sulfur containing diol a polyol containing at least three hydroxyl groups per polyol molecule and an aldehyde a ketone or a combination thereof. Sealant compositions comprising the multifunctional sulfur containing polymers are also disclosed.

No. of Pages : 73 No. of Claims : 21

(12) PATENT APPLICATION PUBLICATION
(19) INDIA
(22) Date of filing of Application :13/09/2013
(21) Application No.8053/DELNP/2013 A
(43) Publication Date : 19/12/2014

(54) Title of the invention : TERMINAL MODIFIED DIFUNCTIONAL SULFUR CONTAINING POLYMERS COMPOSITIONS THEREOF AND METHODS OF USE

(51) International classification :C08G75/12,C09D181/02
(31) Priority Document No :13/050988
(32) Priority Date :18/03/2011
(33) Name of priority country :U.S.A.
(86) International Application No :PCT/US2012/029436
Filing Date :16/03/2012
(87) International Publication No :WO 2012/129090
(61) Patent of Addition to Application Number :NA
Filing Date :NA
(62) Divisional to Application Number :NA
Filing Date :NA

(71)**Name of Applicant :**
1)PRC DESOTO INTERNATIONAL INC.
Address of Applicant :12780 San Fernando Road Sylmar California 91342 U.S.A.
(72)**Name of Inventor :**
1)HOBBS Stephen J.
2)MCCOLLUM Gregory J.
3)ANDERSON Lawrence G.
4)LIN Renhe

(57) Abstract :
Disclosed are terminal modified difunctional sulfur containing polymers that are the reaction products of a sulfur containing diol an aldehyde or a ketone and a compound containing a functional group. Compositions comprising the terminal modified difunctional sulfur containing polymers useful as sealants are also disclosed.

No. of Pages : 67 No. of Claims : 18

(12) PATENT APPLICATION PUBLICATION
(19) INDIA
(22) Date of filing of Application :13/09/2013
(21) Application No.8054/DELNP/2013 A
(43) Publication Date : 19/12/2014

(54) Title of the invention : FULLERENES AND OTHER CAGED MOLECULAR STRUCTURES IN A SPECIAL HYDRATED STATE

(51) International classification :C01B31/02,B82Y40/00,B82B1/00
(31) Priority Document No :a 2011 01824
(32) Priority Date :16/02/2011
(33) Name of priority country :Ukraine
(86) International Application No :PCT/UA2012/000011
Filing Date :09/02/2012
(87) International Publication No :WO 2012/112131
(61) Patent of Addition to Application Number :NA
Filing Date :NA
(62) Divisional to Application Number :NA
Filing Date :NA

(71)**Name of Applicant :**
1)LIMITED LIABILITY COMPANY INSTITUTE OF PHYSIOLOGICAL ACTIVE COMPOUNDS
Address of Applicant :propect Lenina 58 Kharkov 61072 Ukraine
(72)**Name of Inventor :**
1)ANDRIEVSKY Grigoriy Vladimirovich

(57) Abstract :
The invention relates to fullerenes and other fullerene like caged molecular structures in a special hydrated state. The above mentioned hydrated compounds can be described by the following general formulae: (xAi@CB)@{m(OH) n}mH (xAi@CB)@{m(OH)nHO}mH where x0 >0 0 or x0 0 >0 m >1 n>1 >1. Furthermore xi denotes that x atoms of any chemical elements and/or possible combinations with one another (Ai) are located within a caged structure CBwhich may consist of N atoms of carbon and M atoms of any other chemical elements and/or possible combinations Bthereof. The formula @{m(OH)nH0}m+ indicates that the caged structures are enclosed in a shell of m+n molecules of water and that the caged structure is in a special hydrated state in which upon dissociation of the water the m()anions thereof are directly bonded to the caged structure and strongly secured on the surface thereof by donor acceptor bonds.

No. of Pages : 15 No. of Claims : 1

(12) PATENT APPLICATION PUBLICATION
(19) INDIA
(22) Date of filing of Application :13/09/2013
(21) Application No.8055/DELNP/2013 A
(43) Publication Date : 19/12/2014

(54) Title of the invention : IMPROVED EMITTER STRUCTURE BASED ON SILICONE COMPONENTS TO BE USED IN A PHOTOVOLTAIC CONVERTER AND A METHOD FOR PRODUCTION OF THE PHOTOVOLTAIC DEVICE

(51) International classification	:H01L31/028,H01L31/0352,H01L31/18
(31) Priority Document No	:61/457428
(32) Priority Date	:25/03/2011
(33) Name of priority country	:U.S.A.
(86) International Application No	:PCT/IB2012/000867
Filing Date	:22/03/2012
(87) International Publication No	:WO 2012/131496
(61) Patent of Addition to Application Number	:NA
Filing Date	:NA
(62) Divisional to Application Number	:NA
Filing Date	:NA

(71)**Name of Applicant :**
1)KUZNICKI Zbigniew
Address of Applicant :22 rue de la Grossmatt F 67800 Hoenheim France
2)MEYRUEIS Patrick
(72)**Name of Inventor :**
1)KUZNICKI Zbigniew
2)MEYRUEIS Patrick

(57) Abstract :
This invention aims to reduce and preferably to cancel the carrier collection limit effect in order to considerably encrease the conversion efficiency. This improvement is achieved by a suitable modification of the amorphized layer thickness or even by discontinuities separating amorphizing beams or amorphized nanopellets.

No. of Pages : 21 No. of Claims : 20

(12) PATENT APPLICATION PUBLICATION
(19) INDIA
(22) Date of filing of Application :13/09/2013
(21) Application No.8057/DELNP/2013 A
(43) Publication Date : 19/12/2014

(54) Title of the invention : PHOTOELECTRODE AND METHOD FOR PRODUCING SAME PHOTOELECTROCHEMICAL CELL AND ENERGY SYSTEM USING SAME AND HYDROGEN GENERATION METHOD

(51) International classification :C25B11/06,B01J35/02,C01B3/04
(31) Priority Document No :2011109830
(32) Priority Date :16/05/2011
(33) Name of priority country :Japan
(86) International Application No :PCT/JP2012/002843
Filing Date :25/04/2012
(87) International Publication No :WO 2012/157193
(61) Patent of Addition to Application Number :NA
Filing Date :NA
(62) Divisional to Application Number :NA
Filing Date :NA

(71)**Name of Applicant :**
1)PANASONIC CORPORATION
Address of Applicant :1006 Oaza Kadoma Kadoma shi Osaka 5718501 Japan
(72)**Name of Inventor :**
1)TAMURA Satoru
2)NOMURA Takaiki
3)SUZUKI Takahiro
4)TOKUHIRO Kenichi
5)TANIGUCHI Noboru
6)HATO Kazuhito
7)MIYATA Nobuhiro

(57) Abstract :
This photoelectrode (100) is provided with an electroconductor layer (12) and a photocatalytic layer (13) provided above the electroconductor layer (12). The electroconductor layer (12) comprises a metallic nitride. The photocatalytic layer (13) comprises at least one semiconductor selected from the group consisting of nitride semiconductors and oxynitride semiconductors. When the photocatalytic layer (13) comprises an n type semiconductor the energy difference between the vacuum level and the Fermi level of the electroconductor layer (12) is smaller than the energy difference between the vacuum level and the Fermi level of the photocatalytic layer (13). When the photocatalytic layer (13) comprises a p type semiconductor the energy difference between the vacuum level and the Fermi level of the electroconductor layer (12) is larger than the energy difference between the vacuum level and the Fermi level of the photocatalytic layer (13).

No. of Pages : 35 No. of Claims : 10

(12) PATENT APPLICATION PUBLICATION
(19) INDIA
(22) Date of filing of Application :23/07/2013
(21) Application No.6574/DELNP/2013 A
(43) Publication Date : 19/12/2014

(54) Title of the invention : COMPOSITIONS AND METHODS FOR SUCCINATE PRODUCTION

(51) International classification :C12N9/10,C07H21/04,C12P21/06
(31) Priority Document No :61/436185
(32) Priority Date :25/01/2011
(33) Name of priority country :U.S.A.
(86) International Application No :PCT/US2012/022612
Filing Date :25/01/2012
(87) International Publication No :WO 2012/103261
(61) Patent of Addition to Application Number :NA
Filing Date :NA
(62) Divisional to Application Number :NA
Filing Date :NA

(71)**Name of Applicant :**
1)CARGILL INCORPORATED
Address of Applicant :15407 McGinty Road West Wayzata MN 55391 U.S.A.
2)BIOAMBER S.A.S.
(72)**Name of Inventor :**
1)FINLEY Kenneth R.
2)HURYTA Jeanette M.
3)MASTEL Beth M.
4)MCMULLIN Thomas W.
5)POYNTER Gregory M.
6)RUSH Brian J.
7)WATTS Kevin T.
8)FOSMER Arlene M.
9)MCINTOSH Vernon L. Jr.
10)BRADY Keith M.

(57) Abstract :
The present application provides genetically modified yeast cell comprising an active succinate fermentation pathway as well as methods of using these cells to produce succinate.

No. of Pages : 207 No. of Claims : 18

(12) PATENT APPLICATION PUBLICATION
(19) INDIA
(22) Date of filing of Application :13/09/2013
(21) Application No.8063/DELNP/2013 A
(43) Publication Date : 19/12/2014

(54) Title of the invention : PHOTOCHROMIC POLYMER

(51) International classification :C08G65/00,C08G65/04,C08G65/329
(31) Priority Document No :61/481830
(32) Priority Date :03/05/2011
(33) Name of priority country :U.S.A.
(86) International Application No :PCT/AU2012/000458
Filing Date :02/05/2012
(87) International Publication No :WO 2012/149599
(61) Patent of Addition to Application Number :NA
Filing Date :NA
(62) Divisional to Application Number :NA
Filing Date :NA

(71)**Name of Applicant :**
1)VIVIMED LABS EUROPE LTD
Address of Applicant :Syngenta Site Leeds Road Huddersfield HD1 6BU U.K.
(72)**Name of Inventor :**
1)EVANS Richard Alexander
2)MALIC Nino

(57) Abstract :
A photochromic polymer comprising at least two photochromic moieties linked by a straight or branched chain polymer selected from the group consisting of poly(C to C alkylene oxide) poly[Cto Calkoxy substituted (C to C alkylene oxide)] and poly[Cto C acyloxy substituted (C to Calkylene oxide)].

No. of Pages : 64 No. of Claims : 17

(12) PATENT APPLICATION PUBLICATION
(19) INDIA
(22) Date of filing of Application :13/09/2013
(21) Application No.8064/DELNP/2013 A
(43) Publication Date : 19/12/2014

(54) Title of the invention : PHOTOCHROMIC POLYMERS

(51) International classification :C08G63/00,C08G63/08,C08G63/12
(31) Priority Document No :61/492831
(32) Priority Date :03/06/2011
(33) Name of priority country:U.S.A.
(86) International Application No :PCT/AU2012/000563
Filing Date :21/05/2012
(87) International Publication No :WO 2012/162725
(61) Patent of Addition to Application Number :NA
Filing Date :NA
(62) Divisional to Application Number :NA
Filing Date :NA

(71)**Name of Applicant :**
1)VIVIMED LABS EUROPE LTD
Address of Applicant :Syngenta Site Leeds Road Huddersfield HD1 6BU U.K.
(72)**Name of Inventor :**
1)EVANS Richard Alexander
2)MALIC Nino
3)DAGLEY Ian John

(57) Abstract :
A photochromic polymer comprising at least two photochromic moieties linked by a straight or branched chain polymer selected from the group consisting of a homo polyester a co polyester and a co polyester polyether.

No. of Pages : 63 No. of Claims : 18

(12) PATENT APPLICATION PUBLICATION
(19) INDIA
(22) Date of filing of Application :13/09/2013
(21) Application No.8065/DELNP/2013 A
(43) Publication Date : 19/12/2014

(54) Title of the invention : WHEEL DISC FOR VEHICLE

(51) International classification :B60B3/10
(31) Priority Document No :2011104673
(32) Priority Date :09/05/2011
(33) Name of priority country :Japan
(86) International Application No :PCT/JP2012/058810
Filing Date :02/04/2012
(87) International Publication No :WO 2012/153577
(61) Patent of Addition to Application Number :NA
Filing Date :NA
(62) Divisional to Application Number :NA
Filing Date :NA

(71)**Name of Applicant :**
1)TOPY KOGYO KABUSHIKI KAISHA
Address of Applicant :2 2 Osaki 1 chome Shinagawa ku Tokyo 1418634 Japan
(72)**Name of Inventor :**
1)MORISHITA Kenji
2)BOJO Masafumi

(57) Abstract :
Provided is a wheel disc for a vehicle equipped with a spoke part (15) comprises a spoke top wall (15a) a spoke peripheral side wall (15b) and a pair of spoke circumferential direction side walls (15c). Moreover a top wall peripheral side bent part (15a2) of the spoke top wall (15a) curves in the disc radial section of the spoke part (15) with a larger curvature than the curvature of a top wall inner circumference bent part (15a1) of the spoke top wall (15) a top wall stating part (15a4) of the spoke top wall (15) and the spoke peripheral side wall (15b). Therefore the shape of the spoke part (15) approaches more easily the shape of a box as compared with the conventional technology and as a result it is possible to improve the bending strength and flexural rigidity of the spoke part (15) in the disc radial direction.

No. of Pages : 34 No. of Claims : 7

(12) PATENT APPLICATION PUBLICATION
(19) INDIA
(22) Date of filing of Application :13/09/2013
(21) Application No.8066/DELNP/2013 A
(43) Publication Date : 19/12/2014

(54) Title of the invention : VULCANIZED TREAD AND TIRE

(51) International classification :B60C11/02,B60C11/00
(31) Priority Document No :2011157094
(32) Priority Date :15/07/2011
(33) Name of priority country :Japan
(86) International Application No :PCT/JP2012/067675
Filing Date :11/07/2012
(87) International Publication No :WO 2013/011888
(61) Patent of Addition to Application Number :NA
Filing Date :NA
(62) Divisional to Application Number :NA
Filing Date :NA

(71)**Name of Applicant :**
1)BRIDGESTONE CORPORATION
Address of Applicant :10 1 Kyobashi 1 chome Chuo ku Tokyo 1048340 Japan
(72)**Name of Inventor :**
1)NAGAHARA Takeo

(57) Abstract :
Provided are a vulcanized tread and a tire configured so that the uneven wear of the tread of the tire is minimized the tire being manufactured by separately molding a base tire which is to be the base of the tire and the vulcanized tread which is adhered to the base tire and then by integrating the base tire and the vulcanized tread. In order to obtain the vulcanized tread and the tire the vulcanized tread is configured so that the vulcanized tread is provided with grooves which are arranged side by side in the transverse direction of the tread and which extend in the longitudinal direction of the tread and so that the thickness of the tread in a cross section thereof taken in the transverse direction of the tread gradually decreases from the equator to the equator side groove end of the outermost groove which is located on the outermost side in the transverse direction and gradually increases from the outer groove end of the outermost groove in the transverse direction to the outer side in the transverse direction.

No. of Pages : 37 No. of Claims : 7

(12) PATENT APPLICATION PUBLICATION
(19) INDIA
(22) Date of filing of Application :13/09/2013
(21) Application No.8067/DELNP/2013 A
(43) Publication Date : 19/12/2014

(54) Title of the invention : ANTI VIBRATION DEVICE

(51) International classification :F16F15/08,F16F1/36,F16F1/38
(31) Priority Document No :2011083289
(32) Priority Date :05/04/2011
(33) Name of priority country :Japan
(86) International Application No :PCT/JP2012/002372
Filing Date :04/04/2012
(87) International Publication No :WO 2012/137504
(61) Patent of Addition to Application Number :NA
Filing Date :NA
(62) Divisional to Application Number :NA
Filing Date :NA

(71)**Name of Applicant :**
1)BRIDGESTONE CORPORATION
Address of Applicant :10 1 Kyobashi 1 chome Chuo ku Tokyo 1048340 Japan
(72)**Name of Inventor :**
1)SATOU Shunji

(57) Abstract :
An anti vibration device (1) is configured in such a manner that a support plate (3) is attached to the end surface on one end side of a tube shaped body rubber (2) an inner tube (4) is disposed inside the body rubber (2) in such a manner that the inner tube (4) is affixed on the one end (2e) side and a gap (6) extending around the entire circumference is provided between the outer peripheral surface of the inner tube (4) and the inner peripheral surface of the body rubber (2) which excludes a region on the one end (2e) side of the body rubber (2). Protrusions (7a 7b) are provided on the inner peripheral surface on the other end (2f) side of the body rubber (2). The protrusions (7a 7b) are provided at portions of the body rubber (2) in the circumferential direction thereof and protrude from the inner peripheral surface so as to be in contact with or approach the inner tube (4). The protrusions (7a 7b) are extended in the direction of the axis of the body rubber (2) so as to be located in the region in which an outer tube (5) is disposed the outer tube (5) being disposed so as to surround a rubber portion (2a) on the other end (2f) side of the body rubber (2).

No. of Pages : 27 No. of Claims : 4

(12) PATENT APPLICATION PUBLICATION
(19) INDIA
(22) Date of filing of Application :23/07/2013
(21) Application No.6558/DELNP/2013 A
(43) Publication Date : 19/12/2014

(54) Title of the invention : COATING COMPOSITIONS FOR CONTAINERS AND OTHER ARTICLES AND METHODS OF COATING

(51) International classification :C09D5/03,C09D129/10,B05D1/00
(31) Priority Document No :61/440085
(32) Priority Date :07/02/2011
(33) Name of priority country :U.S.A.
(86) International Application No :PCT/US2012/024193
Filing Date :07/02/2012
(87) International Publication No :WO 2012/109278
(61) Patent of Addition to Application Number :NA
Filing Date :NA
(62) Divisional to Application Number :NA
Filing Date :NA

(71)**Name of Applicant :**
1)VALSPAR SOURCING INC.
Address of Applicant :P.O. Box 1461 Minneapolis MN 55440 U.S.A.
(72)**Name of Inventor :**
1)NIEDERST Jeffrey
2)EVANS Richard H.
3)OBRIEN Robert M.
4)ROMAGNOLI Kevin
5)KILLILEA T. Howard
6)VON MAIER Mark S.

(57) Abstract :
This invention provides a polymer which is preferably a polyether polymer for use in coating compositions. Containers comprising the polymer and methods of making such containers are also provided. The invention further provides powder coating compositions including the polymer which have utility in a variety of coating end uses including for example valve and pipe coatings.

No. of Pages : 86 No. of Claims : 47

(12) PATENT APPLICATION PUBLICATION
(19) INDIA
(22) Date of filing of Application :06/09/2013
(21) Application No.7829/DELNP/2013 A
(43) Publication Date : 19/12/2014

(54) Title of the invention : SEED SPECIFIC PROMOTER IN COTTON

(51) International classification :C12N15/82,A01H5/00
(31) Priority Document No :11075060.1
(32) Priority Date :07/04/2011
(33) Name of priority country :EPO
(86) International Application No :PCT/EP2012/056324
Filing Date :05/04/2012
(87) International Publication No :WO 2012/136788
(61) Patent of Addition to Application Number :NA
Filing Date :NA
(62) Divisional to Application Number :NA
Filing Date :NA

(71)**Name of Applicant :**
1)BAYER CROPSCIENCE NV
Address of Applicant :J.E. Mommaertslaan 14 B 1831 Diegem Belgium
(72)**Name of Inventor :**
1)SCHEIRLINCK Marie Therese
2)MEULEWAETER Frank
3)JACOBS John

(57) Abstract :
The present application discloses a(n) (isolated) nucleic acid sequence comprising a nucleotide sequence selected from (a) SEQ ID NO: 1 or a fragment thereof wherein said fragment comprises at least 400 consecutive nucleotides of SEQ ID NO: 1 and has seed specific promoter activity; (b) a nucleotide sequence with at least 80% sequence identity with SEQ ID NO: 1 and having seed specific promoter activity; (c) a nucleotide sequence hybridizing under stringent conditions to the nucleotide sequence of (a) or (b); and (d) a nucleotide sequence complementary to the nucleotide sequence of any one of (a) to (c). Further disclosed herein is a chimeric gene comprising the (isolated) nucleic acid described herein operably linked to a nucleic acid coding for an expression product of interest and optionally a transcription termination and polyadenylation sequence. Also disclosed herein are a vector a transgenic plant cell a transgenic plant and a seed as characterized in the claims. Methods disclosed herein relate to the production of a transgenic plant growing cotton producing a seed effecting seed specific expression of a product in cotton and of altering fiber properties in a cotton plant as characterized in the claims.

No. of Pages : 63 No. of Claims : 25

(12) PATENT APPLICATION PUBLICATION
(19) INDIA
(22) Date of filing of Application :16/09/2013
(21) Application No.8073/DELNP/2013 A
(43) Publication Date : 19/12/2014

(54) Title of the invention : METHOD FOR DETERMINING SUSPENDED MATTER LOADS CONCENTRATIONS IN A LIQUID

(51) International classification :G01N9/26,G01F1/00
(31) Priority Document No :11157554.4
(32) Priority Date :09/03/2011
(33) Name of priority country :EPO
(86) International Application No :PCT/EP2012/054135
Filing Date :09/03/2012
(87) International Publication No :WO 2012/120122
(61) Patent of Addition to Application Number :NA
Filing Date :NA
(62) Divisional to Application Number :NA
Filing Date :NA

(71)**Name of Applicant :**
1)UNIVERSITE LIBRE DE BRUXELLES
Address of Applicant :Avenue F.D. Roosevelt C.P. 161 B 1050 Bruxelles Belgium
(72)**Name of Inventor :**
1)VERBANCK Michel
2)PETROVIC Dragana
3)VANDERBORGHT Jean Pierre

(57) Abstract :
The present invention relates to a method for monitoring suspended matter loads concentration in a liquid wherein said method comprises the steps of: a) collecting environmental variables comprising: the pressure at a depth in said liquid the liquid depth at which said pressure is collected; providing the value of the pressure which is the aerial pressure; b) inserting said environmental variables in an equation; c) calculating the suspended matter loads volumetric concentration in the liquid from the absolute pressure measured at the depth in the liquid.

No. of Pages : 29 No. of Claims : 16

(12) PATENT APPLICATION PUBLICATION
(19) INDIA
(22) Date of filing of Application :16/09/2013
(21) Application No.8074/DELNP/2013 A
(43) Publication Date : 19/12/2014

(54) Title of the invention : COMPOUND AND METHOD FOR PRODUCING SAME AS WELL AS METHOD FOR PRODUCING OSELTAMIVIR PHOSPHATE

(51) International classification :C07C229/30,A61K31/225,A61P31/12
(31) Priority Document No :2011050720
(32) Priority Date :08/03/2011
(33) Name of priority country :Japan
(86) International Application No :PCT/JP2012/055085
Filing Date :29/02/2012
(87) International Publication No :WO 2012/121079
(61) Patent of Addition to Application Number :NA
Filing Date :NA
(62) Divisional to Application Number :NA
Filing Date :NA

(71)**Name of Applicant :**
1)Microbial Chemistry Research Foundation
Address of Applicant :14 23 Kamiosaki 3 chome Shinagawa ku Tokyo 1410021 Japan
(72)**Name of Inventor :**
1)SHIBASAKI Masakatsu
2)YAMATSUGU Kenzo

(57) Abstract :
Provided is a compound represented by general formula (1). Also provided is a method for producing a compound represented by formula (1) that comprises a reaction step for reacting a compound represented by general formula (2) a compound represented by general formula (3) and a compound represented by general formula (4). In general formulas (1) through (4) R is a protector group of a carboxyl group or a hydrogen atom; R and R are each independently a protector group of an amino group or a hydrogen atom; and R is a protector group of a carboxyl group or a hydrogen atom.

No. of Pages : 50 No. of Claims : 13

(12) PATENT APPLICATION PUBLICATION
(19) INDIA
(22) Date of filing of Application :16/09/2013
(21) Application No.8075/DELNP/2013 A
(43) Publication Date : 19/12/2014

(54) Title of the invention : METHODS TO IMPROVE THE PROCESS ABILITY OF UNI DIRECTIONAL COMPOSITES

(51) International classification :D06M17/00,D06M17/04,B32B7/12
(31) Priority Document No :13/072523
(32) Priority Date :25/03/2011
(33) Name of priority country :U.S.A.
(86) International Application No :PCT/US2012/029937
Filing Date :21/03/2012
(87) International Publication No :WO 2012/170100
(61) Patent of Addition to Application Number :NA
Filing Date :NA
(62) Divisional to Application Number :NA
Filing Date :NA

(71)**Name of Applicant :**
1)HONEYWELL INTERNATIONAL INC.
Address of Applicant :Patent Services M/S AB/2B 101 Columbia Road P.O. Box 2245 Morristown New Jersey 07962 2245 U.S.A.
(72)**Name of Inventor :**
1)ARDIFF Henry Gerard
2)GRUNDEN Bradley
3)BARTELT Tyler

(57) Abstract :
A method of producing composites useful for the formation of armor and armor sub assembly intermediates. More particularly improved ballistic resistant composites and a method for the production of ballistic resistant composites and armor sub assembly intermediates from composites that have resin poor surfaces resulting from the non uniform impregnation polymeric binder materials in fiber layers.

No. of Pages : 44 No. of Claims : 10

(12) PATENT APPLICATION PUBLICATION
(19) INDIA
(22) Date of filing of Application :06/09/2013
(21) Application No.7840/DELNP/2013 A
(43) Publication Date : 19/12/2014

(54) Title of the invention : DEVICE AND METHOD FOR DETECTING OPHTALMIC AND/OR BRAIN DISEASES

(51) International classification :A61B3/16
(31) Priority Document No :61/472660
(32) Priority Date :07/04/2011
(33) Name of priority country :U.S.A.
(86) International Application No :PCT/EP2012/053825
Filing Date :06/03/2012
(87) International Publication No :WO 2012/136431
(61) Patent of Addition to Application Number :NA
Filing Date :NA
(62) Divisional to Application Number :NA
Filing Date :NA

(71)**Name of Applicant :**
1)SENSIMED SA
Address of Applicant :Route de Chavannes 37 CH 1007 Lausanne Switzerland
(72)**Name of Inventor :**
1)LEONARDI Matteo
2)WISMER Jean Marc
3)CERBONI Sacha
4)SCHLUND Mario

(57) Abstract :
System for monitoring at least one biomechanical ophthalmic parameter the system comprising a measuring device (1) adapted to be placed on or implanted into an eye of a patient for measuring said at least one biomechanical ophthalmic parameter of said eye a recording device (6) for obtaining from said measuring device (1) measurement data representative of the instant value of said at least one biomechanical ophthalmic parameter of said eye wherein said recording device is adapted to obtain said measurement data at a predetermined frequency equal to or greater than twice the variation frequency of said at least one biomechanical ophthalmic parameter. Method comprising monitoring at least one biomechanical ophthalmic parameter of an eye of a patient using a measuring device (1) adapted to be placed on or implanted into an eye of a patient for measuring the at least one biomechanical ophthalmic parameter of the eye obtaining from the measuring device (1) a plurality of measurement data representative of the value the at least one biomechanical ophthalmic parameter of the eye measured at a predetermined frequency wherein the predetermined frequency is equal or greater than twice the variation frequency of the at least one biomechanical ophthalmic parameter at least partly automatically analyzing the plurality of measurement data in order to determine an ophthalmic condition of the eye.

No. of Pages : 34 No. of Claims : 33

(12) PATENT APPLICATION PUBLICATION
(19) INDIA
(22) Date of filing of Application :06/09/2013
(21) Application No.7841/DELNP/2013 A
(43) Publication Date : 19/12/2014

(54) Title of the invention : SYSTEM AND METHOD FOR PROVIDING AND TRANSFERRING FUNGIBLE ELECTRONIC MONEY

(51) International classification :G06Q20/06
(31) Priority Document No :61/449974
(32) Priority Date :07/03/2011
(33) Name of priority country :U.S.A.
(86) International Application No :PCT/EP2012/053821
Filing Date :06/03/2012
(87) International Publication No :WO 2012/120011
(61) Patent of Addition to Application Number :NA
Filing Date :NA
(62) Divisional to Application Number :NA
Filing Date :NA

(71)**Name of Applicant :**
1)GIORI Roberto
Address of Applicant :4 avenue des Guelfes MC 98000 Monaco Monaco
(72)**Name of Inventor :**
1)GIORI Roberto

(57) Abstract :
A system and method for transferring fungible electronic money is disclosed. The system and method include two or more Central Banks that guarantee the electronic money within an electronic communications network the electronic money being an authenticated and fungible currency capable of electronic transfer. The system and method further include registering a first user within the electronic services network registering a second user within the electronic services network receiving a request from the first user to transfer at least a portion of the electronic money to the second user and electronically transferring the at least a portion of the electronic money to a mobile device belonging to the second user in response to the request received from the first user wherein the electronic transfer occurs within the electronic communications network.

No. of Pages : 65 No. of Claims : 14

(12) PATENT APPLICATION PUBLICATION
(19) INDIA
(22) Date of filing of Application :16/09/2013
(21) Application No.8085/DELNP/2013 A
(43) Publication Date : 19/12/2014

(54) Title of the invention : TIRE PRESSURE MONITORING SYSTEM

(51) International classification :B60C23/02
(31) Priority Document No :61/454783
(32) Priority Date :18/03/2011
(33) Name of priority country :U.S.A.
(86) International Application No :PCT/US2012/029575
Filing Date :18/03/2012
(87) International Publication No :WO 2012/129132
(61) Patent of Addition to Application Number :NA
Filing Date :NA
(62) Divisional to Application Number :NA
Filing Date :NA

(71)**Name of Applicant :**
1)LUNDQVIST Torbjorn
Address of Applicant :1001 Christy Way Fallbrook CA 92028 U.S.A.
(72)**Name of Inventor :**
1)LUNDQVIST Torbjorn

(57) Abstract :
The invention comprises a tire pressure monitoring system. One system comprises a tire pressure monitor that signals to a user with audio alarm and visual alarm. Another component is the use of a tire air pressure balancing device with a safety trigger to ensure that dual tire systems share air but that stop sharing air in the case of rapid air pressure drop as in cases of tire blow out.

No. of Pages : 32 No. of Claims : 10

(12) PATENT APPLICATION PUBLICATION
(19) INDIA
(22) Date of filing of Application :16/09/2013
(21) Application No.8087/DELNP/2013 A
(43) Publication Date : 19/12/2014

(54) Title of the invention : SELECTIVELY VARIABLE FLOW RESTRICTOR FOR USE IN A SUBTERRANEAN WELL

(51) International classification :E21B21/08,E21B21/10
(31) Priority Document No :13/084025
(32) Priority Date :11/04/2011
(33) Name of priority country :U.S.A.
(86) International Application No :PCT/US2012/030641
Filing Date :27/03/2012
(87) International Publication No :WO 2012/141880
(61) Patent of Addition to Application Number :NA
Filing Date :NA
(62) Divisional to Application Number :NA
Filing Date :NA

(71)**Name of Applicant :**
1)HALLIBURTON ENERGY SERVICES INC.
Address of Applicant :10200 Bellaire Boulevard Houston TX 77072 U.S.A.
(72)**Name of Inventor :**
1)FRIPP Michael L.
2)DYKSTRA Jason D.

(57) Abstract :
A variable flow resistance system for use with a subterranean well can include a flow chamber through which a fluid composition flows the chamber having at least two inlets and a flow resistance which varies depending on proportions of the fluid composition which flow into the chamber via the respective inlet flow paths and an actuator which varies the proportions. The actuator may deflect the fluid composition toward one of the inlet flow paths. A method of variably controlling flow resistance in a well can include changing an orientation of a deflector relative to a passage through which a fluid composition flows thereby influencing the fluid composition to flow toward one of multiple inlet flow paths of a flow chamber the chamber having a flow resistance which varies depending on proportions of the fluid composition which flow into the chamber via the respective inlet flow paths.

No. of Pages : 36 No. of Claims : 51

(12) PATENT APPLICATION PUBLICATION
(19) INDIA
(22) Date of filing of Application :06/09/2013
(21) Application No.7851/DELNP/2013 A
(43) Publication Date : 19/12/2014

(54) Title of the invention : PROCESS FOR THE PREPARATION OF (S) (+) OR (R) ( ) 10 HYDROXY DIHYDRODIBENZ[B F]AZEPINES BY ENANTIOSELECTIVE REDUCTION OF 10 11 DIHYDRO 10 OXO 5H DIBENZ[B F]AZEPINES AND POLYMORPHS THEREOF

(51) International classification	:C07D223/22,A61K31/55,A61P25/00
(31) Priority Document No	:638/DEL/2011
(32) Priority Date	:08/03/2011
(33) Name of priority country	:India
(86) International Application No	:PCT/IB2012/000410
Filing Date	:06/03/2012
(87) International Publication No	:WO 2012/120356
(61) Patent of Addition to Application Number	:NA
Filing Date	:NA
(62) Divisional to Application Number	:NA
Filing Date	:NA

(71)**Name of Applicant :**
1)JUBILANT LIFE SCIENCES LIMITED
Address of Applicant :Plot 1A Sector 16A Noida 201 301 Uttar Pradesh India
(72)**Name of Inventor :**
1)BISWAS. Sujay
2)DUBEY Shailendra Kumar
3)BANSAL Vikas
4)MASAND Mukesh
5)VIR Dharam

(57) Abstract :
THE PRESENT INVENTION PROVIDES A NOVEL PROCESS FOR THE PREPARATION OF SUBSTITUTED OPTICALLY PURE (S) (+) OR (R) ( ) 10 HYDROXY DIHYDRODIBENZ[B F]AZEPINES OR DERIVATIVES THEREOF STARTING FROM 10 11 DIHYDRO 10 OXO 5H DIBENZ[B F]AZEPINES USING BORONATE ESTERS OR THEIR DERIVATIVES.
THE PRESENT INVENTION ALSO PROVIDES USE OF THUS PREPARED (S) (+) OR (R) ( ) 10 HYDROXY DIHYDRODIBENZ[B F]AZEPINES FOR THE PREPARATION OF THEIR ESTER SUCH AS (S) ( ) 10 ACETOXY 10 11 DIHYDRO 5H DIBENZ[B F]AZEPINE 5 CARBOXAMIDE OR (R) (+) 10 ACETOXY 10 11 DIHYDRO 5H DIBENZ[B F]AZEPINE 5 CARBOXAMIDE. THE PRESENT INVENTION ALSO PROVIDES NOVEL SOLID STATE CRYSTALLINE FORMS J J J J AND AMORPHOUS FORM OF ESLICARBAZEPINE AND THE PROCESS FOR THE PREPARATION THEREOF. ALSO THE PRESENT INVENTION PROVIDES NOVEL SOLID STATE CRYSTALLINE FORM AND AMORPHOUS FORM OF ESLICARBAZEPINE ACETATE AND THE PROCESS FOR THE PREPARATION THEREOF. THE NOVEL SOLID STATE FORMS OF ESLICARBAZEPINE ARE USEFUL FOR THE PREPARATION OF DERIVATIVES OF ESLICARBAZEPINE SUCH AS ESLICARBAZEPINE ACETATE.

No. of Pages : 53 No. of Claims : 53

(12) PATENT APPLICATION PUBLICATION
(19) INDIA
(22) Date of filing of Application :16/09/2013
(21) Application No.8090/DELNP/2013 A
(43) Publication Date : 19/12/2014

(54) Title of the invention : WIRELESS DEVICE POSITION DETERMINING AND FREQUENCY ASSIGNING SYSTEMS DEVICES AND METHODS

(51) International classification	:H04W24/02,H04W16/16,H04W64/00
(31) Priority Document No	:13/042038
(32) Priority Date	:07/03/2011
(33) Name of priority country	:U.S.A.
(86) International Application No	:PCT/IB2011/054902
Filing Date	:03/11/2011
(87) International Publication No	:WO 2012/120341
(61) Patent of Addition to Application Number	:NA
Filing Date	:NA
(62) Divisional to Application Number	:NA
Filing Date	:NA

(71)**Name of Applicant :**
1)TELEFONAKTIEBOLAGET L M ERICSSON (PUBL)
Address of Applicant :S 164 83 Stockholm Sweden
(72)**Name of Inventor :**
1)KOORAPATY Havish
2)SACHS Joachim
3)RAHMAN Muhammad Imadur
4)BALACHANDRAN Kumar

(57) Abstract :
Wireless communication methods determine a position of a first wireless base station. A wireless communication frequency to be used by the first wireless base station is determined by identifying a common frequency that can be used at a plurality of locations surrounding and spaced apart from the position of the first wireless base station that was determined. The first wireless base station may be a femto base station and the frequency may be an unlicensed frequency. Related systems and devices are also described.

No. of Pages : 40 No. of Claims : 21

(12) PATENT APPLICATION PUBLICATION
(19) INDIA
(22) Date of filing of Application :16/09/2013
(21) Application No.8091/DELNP/2013 A
(43) Publication Date : 19/12/2014

(54) Title of the invention : COMPACT EXHAUST GAS TREATMENT UNIT WITH MIXING REGION AND METHOD FOR MIXING AN EXHAUST GAS

(51) International classification :F01N3/20,F01N1/08
(31) Priority Document No :10 2011 015 512.0
(32) Priority Date :30/03/2011
(33) Name of priority country :Germany
(86) International Application No :PCT/EP2012/055800
Filing Date :30/03/2012
(87) International Publication No :WO 2012/131042
(61) Patent of Addition to Application Number :NA
Filing Date :NA
(62) Divisional to Application Number :NA
Filing Date :NA

(71)**Name of Applicant :**
1)EMITEC Gesellschaft f¼r Emissionstechnologie mbH
Address of Applicant :Hauptstrae 128 53797 Lohmar Germany
(72)**Name of Inventor :**
1)BEYER Sebastian
2)DANCKERT Bernd
3)ENDER Martin Walter
4)VOGEL Samuel

(57) Abstract :
An exhaust gas treatment unit (1) at least having a housing (2) with a first face side (3) and with an oppositely arranged second face side (4) having a pipe (5) which extends from the first face side (3) to the second face side (4) and which serves as an inflow region (6) for an exhaust gas (7) having a diverting region (8) in the region of the second face side (4) for the exhaust gas (7) and having a return flow region (9) which extends between the pipe (5) and the housing (2). In the diverting region (8) the exhaust gas (7) is mixed and transferred into the return flow region (9). A method for mixing an exhaust gas (7) in an exhaust gas treatment unit (1).

No. of Pages : 21 No. of Claims : 10

(12) PATENT APPLICATION PUBLICATION
(19) INDIA
(22) Date of filing of Application :16/09/2013
(21) Application No.8094/DELNP/2013 A
(43) Publication Date : 19/12/2014

(54) Title of the invention : MODULAR MASS STORAGE SYSTEM

(51) International classification :G06F1/16
(31) Priority Document No :13/069065
(32) Priority Date :22/03/2011
(33) Name of priority country :U.S.A.
(86) International Application No :PCT/US2012/029828
Filing Date :20/03/2012
(87) International Publication No :WO 2012/129241
(61) Patent of Addition to Application Number :NA
Filing Date :NA
(62) Divisional to Application Number :NA
Filing Date :NA

(71)**Name of Applicant :**
1)AMAZON TECHNOLOGIES INC.
Address of Applicant :P.O. Box 8102 Reno Nevada 89507 U.S.A.
(72)**Name of Inventor :**
1)FRINK Darin Lee
2)ROSS Peter G.

(57) Abstract :
A system for storing data includes a rack one or more data storage modules coupled to the rack and one or more data control modules coupled to the rack. The data storage modules may include a chassis two or more backplanes coupled to the chassis and one or more mass storage devices (for example hard disk drives) coupled to the backplanes. The data control modules may access the mass storage devices in the data storage modules.

No. of Pages : 35 No. of Claims : 15

(12) PATENT APPLICATION PUBLICATION
(19) INDIA
(22) Date of filing of Application :16/09/2013
(21) Application No.8095/DELNP/2013 A
(43) Publication Date : 19/12/2014

(54) Title of the invention : SILVER WHITE COPPER ALLOY AND METHOD FOR MANUFACTURING SILVER WHITE COPPER ALLOY

(51) International classification :C22C9/04,C22F1/00,C22F1/08
(31) Priority Document No :2011143883
(32) Priority Date :29/06/2011
(33) Name of priority country :Japan
(86) International Application No :PCT/JP2012/066356
Filing Date :27/06/2012
(87) International Publication No :WO 2013/002247
(61) Patent of Addition to Application Number :NA
Filing Date :NA
(62) Divisional to Application Number :NA
Filing Date :NA

(71)**Name of Applicant :**
1)Mitsubishi Shindoh Co. Ltd.
Address of Applicant :4 7 35 Kita shinagawa Shinagawa ku Tokyo 1408550 Japan
2)Mitsubishi Materials Corporation
(72)**Name of Inventor :**
1)TANAKA Shinji
2)OISHI Keiichiro
3)OGAWA Hiroharu

(57) Abstract :
Provided are a silver white copper alloy and a method for manufacturing a silver white copper alloy which has excellent hot processability cold processability press characteristics and other processing and mechanical properties which is not liable to discolor and which has excellent bactericidal antibacterial and anti Ni allergy properties. The silver white copper alloy is a composition comprising 51.0 58.0 mass% of Cu 9.0 12.5 mass% of Ni 0.0003 0.010 mass% of C and 0.0005 0.030 mass% of Pb with the remainder being Zn and other unavoidable impurities. The Cu content [Cu] mass% and the Ni content [Ni] mass% have the relationship 65.5 = [Cu] + 1.2 — [Ni] = 70.0. The metallographic structure has a phase of 0 0.9% in terms of the area ratio dispersed in an a phase matrix.q

No. of Pages : 92 No. of Claims : 6

(12) PATENT APPLICATION PUBLICATION
(19) INDIA
(22) Date of filing of Application :06/09/2013
(21) Application No.7847/DELNP/2013 A
(43) Publication Date : 19/12/2014

(54) Title of the invention : PROSTHETIC SPINAL DISK

(51) International classification :A61F2/44
(31) Priority Document No :10 2011 050 453.2
(32) Priority Date :18/05/2011
(33) Name of priority country :Germany
(86) International Application No :PCT/EP2012/051815
Filing Date :03/02/2012
(87) International Publication No :WO 2012/156105
(61) Patent of Addition to Application Number :NA
Filing Date :NA
(62) Divisional to Application Number :NA
Filing Date :NA

(71)**Name of Applicant :**
1)ULRICH GMBH & CO. KG
Address of Applicant :Buchbrunnenweg 12 89081 Ulm Germany
(72)**Name of Inventor :**
1)BTTNER JANZ Karin
2)WIEDENBECK Nelli

(57) Abstract :
An intervertebral disk prosthesis for the total replacement of an intervertebral disk of the cervical or lumbar spine has an upper plate (2) having on its upper surface upwardly projecting formations (3) anchoring it to an upper vertebra and a concavity (8) on its lower inner surface surrounded by an edge. A lower plate (1) is provided with downwardly projecting formations (3) on its lower surface anchoring it to a lower vertebra and with a flat upper inner surface surrounding a guide groove (7) extending front to back with a first body stop on the back and/or a second body stop on the front. An intermediate sliding plate (13) between the upper and lower plate (2 1) has on its upper surface a convexity (4) that is identically or differently shaped to the concavity (8) on the lower inner surface of the upper plate (2) and on its lower surface a guide ridge (5) extending front to back surrounded by a flat surface. The guide ridge (5) of the intermediate sliding plate (13) has flanks and the guide groove (7) of the lower plate (1) houses the guide ridge (5) of the intermediate sliding plate (13) and permits the intermediate sliding plate (13) via its guide ridge (5) to slide front to back within the guide groove (7) as translational motion while in the sliding area of the convexity (4) of the intermediate sliding plate (13) and of the concavity (8) of the upper plate (2) limited extension flexion lateral bending to right and left side and axial rotation to both sides takes place.

No. of Pages : 24 No. of Claims : 21

(12) PATENT APPLICATION PUBLICATION
(19) INDIA
(22) Date of filing of Application :06/09/2013
(21) Application No.7848/DELNP/2013 A
(43) Publication Date : 19/12/2014

(54) Title of the invention : SILDENAFIL FREE BASE CONTAINING FILM PREPARATION AND METHOD FOR PRODUCING SAME

(51) International classification :A61K9/70,A61K31/519
(31) Priority Document No :1020110012516
(32) Priority Date :11/02/2011
(33) Name of priority country :Republic of Korea
(86) International Application No :PCT/KR2012/001049
Filing Date :13/02/2012
(87) International Publication No :WO 2012/108738
(61) Patent of Addition to Application Number :NA
Filing Date :NA
(62) Divisional to Application Number :NA
Filing Date :NA

(71)**Name of Applicant :**
1)CTC BIO INC.
Address of Applicant :13 Jungdae ro 40 gill Songpa gu Seoul 138 858 Republic of Korea
(72)**Name of Inventor :**
1)JEON Hong Ryeol
2)LEE Bong Sang
3)PARK Su Jun
4)CHA Bong Geun
5)KIM Jun Ki

(57) Abstract :
The present invention relates to a method for producing a film in which a sildenafil free base is uniformly dispersed wherein the film includes a high content of sildenafil free base has an appropriate size and thickness and is also unbreakable by virtue of its flexibility rendering it easy to handle. The present invention also relates to a sildenafil free base containing film produced by this method.

No. of Pages : 18 No. of Claims : 16

(12) PATENT APPLICATION PUBLICATION
(19) INDIA
(22) Date of filing of Application :16/09/2013
(21) Application No.8097/DELNP/2013 A
(43) Publication Date : 19/12/2014

(54) Title of the invention : CATALYZED HYDROXYLAMINE PREPARATION

(51) International classification :C01B21/14
(31) Priority Document No :11163586.8
(32) Priority Date :22/04/2011
(33) Name of priority country :EPO
(86) International Application No :PCT/EP2012/056925
Filing Date :16/04/2012
(87) International Publication No :WO 2012/143332
(61) Patent of Addition to Application Number :NA
Filing Date :NA
(62) Divisional to Application Number :NA
Filing Date :NA

(71)**Name of Applicant :**
1)DSM IP Assets B.V.
Address of Applicant :Het Overloon 1 NL 6411 TE Heerlen Netherlands
(72)**Name of Inventor :**
1)GROOTHAERT Marijke Hilde Leen
2)TINGE Johan Thomas
3)GUIT Rudolf Philippus Maria

(57) Abstract :
Method for preparing hydroxylamine in a continuous process comprising hydrogenating nitrate in a reaction zone comprising a liquid phase a gas phase and a heterogeneous hydrogenation catalyst in which reaction zone hydroxylamine and nitrous oxide (N20) are formed characterized in that the nitrous oxide concentration in the gas phase is monitored and is maintained within a pre¬ determined range by means of controlled addition of a promoter for the heterogeneous hydrogenation catalyst and/or controlled addition of further amounts of heterogeneous hydrogenation catalyst to the reaction zone until the total amount of catalyst present reaches a pre determined upper limit; and then (i) withdrawing a fraction of the heterogeneous hydrogenation catalyst from the reaction zone; and (ii) adding one or more further doses of heterogeneous hydrogenation catalyst until the total amount of catalyst present is at most at said pre determined upper limit; and (iii) optionally repeating steps (i) and (ii); a method for producing an oxime and a method for producing a lactam comprising said process for producing hydroxylamine.

No. of Pages : 19 No. of Claims : 13

(12) PATENT APPLICATION PUBLICATION
(19) INDIA
(22) Date of filing of Application :16/09/2013
(21) Application No.8098/DELNP/2013 A
(43) Publication Date : 19/12/2014

(54) Title of the invention : CATALYZED HYDROXYLAMINE PREPARATION

(51) International classification :C01B21/14
(31) Priority Document No :11163583.5
(32) Priority Date :22/04/2011
(33) Name of priority country :EPO
(86) International Application No :PCT/EP2012/056924
Filing Date :16/04/2012
(87) International Publication No :WO 2012/143331
(61) Patent of Addition to Application Number :NA
Filing Date :NA
(62) Divisional to Application Number :NA
Filing Date :NA

(71)**Name of Applicant :**
1)DSM IP ASSETS B.V.
Address of Applicant :Het Overloon 1 NL 6411 TE Heerlen Netherlands
(72)**Name of Inventor :**
1)GROOTHAERT Marijke Hilde Leen
2)TINGE Johan Thomas
3)GUIT Rudolf Philippus Maria

(57) Abstract :
Method for preparing hydroxylamine in a continuous process comprising hydrogenating nitrate in a reaction zone comprising a liquid phase a gas phase and a heterogeneous hydrogenation catalyst in which reaction zone hydroxylamine and nitrous oxide (N20) are formed characterized in that the nitrous oxide concentration in the gas phase is monitored and is maintained within a predetermined range by means of controlled addition of a promoter for the heterogeneous hydrogenation catalyst and/or controlled addition of further amounts of heterogeneous hydrogenation catalyst to the reaction zone; a method for preparing an oxime and a method of preparing a lactam comprising said method for preparing hydroxylamine.

No. of Pages : 19 No. of Claims : 15

(12) PATENT APPLICATION PUBLICATION
(19) INDIA
(22) Date of filing of Application :06/09/2013
(21) Application No.7859/DELNP/2013 A
(43) Publication Date : 19/12/2014

(54) Title of the invention : METHOD FOR PREPARING ANTISTATIC UV CURABLE HARDCOATINGS ON OPTICAL ARTICLES

(51) International classification :C08K3/00
(31) Priority Document No :NA
(32) Priority Date :NA
(33) Name of priority country :NA
(86) International Application No :PCT/US2011/028964
Filing Date :18/03/2011
(87) International Publication No :WO 2012/128740
(61) Patent of Addition to Application Number :NA
Filing Date :NA
(62) Divisional to Application Number :NA
Filing Date :NA

(71)**Name of Applicant :**
1)ESSILOR INTERNATIONAL (COMPAGNIE GENERALE DOPTIQUE)
Address of Applicant :147 Rue de Paris F 94220 Charenton Le Pont France
(72)**Name of Inventor :**
1)VALERI Robert

(57) Abstract :
The present invention is drawn to a liquid photocurable composition comprising: from 25 to 65 % by weight relative to the total weight of the composition of a mixture of polyfunctional acrylic monomers said mixture consisting of (c) at least one monomer comprising at least six acrylic functional groups and (d) at least one monomer comprising two three or four (meth)acrylic functional groups preferably two or three acrylic functional groups from 25 to 70 % by weight relative to the total weight of the composition of at least one organic solvent from 8.0 to 20.0 % by weight preferably from 8.5 to 12 % by weight relative to the total solids content of the composition of at least one mineral conductive colloid from 0.5 to 5 % by weight preferably from 1.0 4.0 % by weight relative to the total weight of acryl functional monomers (a) and (b) of at least one radical photoinitiator said photocurable composition not containing any epoxy functional monomer. The present invention is also drawn to a method for preparing such a composition and for a method of producing antistatic hardcoatings on optical articles using such a composition.

No. of Pages : 17 No. of Claims : 12

(12) PATENT APPLICATION PUBLICATION
(19) INDIA
(22) Date of filing of Application :06/09/2013
(21) Application No.7860/DELNP/2013 A
(43) Publication Date : 19/12/2014

(54) Title of the invention : MICROBIAL SYNTHESES OF ALDEHYDES AND CORRESPONDING ALCOHOLS

(51) International classification :C12N15/63,C12P7/06,C12N15/60
(31) Priority Document No :61/452519
(32) Priority Date :14/03/2011
(33) Name of priority country :U.S.A.
(86) International Application No :PCT/US2012/029013
Filing Date :14/03/2012
(87) International Publication No :WO 2012/125688
(61) Patent of Addition to Application Number :NA
Filing Date :NA
(62) Divisional to Application Number :NA
Filing Date :NA

(71)**Name of Applicant :**
1)EASEL BIOTECHNOLOGIES LLC
Address of Applicant :11755 Wilshire Blvd Suite 2000 Los Angeles California 90025 U.S.A.
(72)**Name of Inventor :**
1)HIGASHIDE Wendy M.
2)CHO Kwang Myung
3)RABIZADEH Shahrooz

(57) Abstract :
An improved process for alcohol production includes microbial fermentation using a genetically modified microorganism to produce substantial quantities of aldehydes that are stripped from the fermentation medium and condensed. So produced aldehydes are converted in an ex vivo process to corresponding alcohols.

No. of Pages : 26 No. of Claims : 20

(12) PATENT APPLICATION PUBLICATION
(19) INDIA
(22) Date of filing of Application :06/09/2013
(21) Application No.7861/DELNP/2013 A
(43) Publication Date : 19/12/2014

(54) Title of the invention : ROLLING CONTROL DEVICE ROLLING CONTROL METHOD AND ROLLING CONTROL PROGRAM

(51) International classification :B21C47/02,B21B1/32,B21B37/46
(31) Priority Document No :NA
(32) Priority Date :NA
(33) Name of priority country :NA
(86) International Application No :PCT/JP2011/056588
Filing Date :18/03/2011
(87) International Publication No :WO 2012/127570
(61) Patent of Addition to Application Number :NA
Filing Date :NA
(62) Divisional to Application Number :NA
Filing Date :NA

(71)**Name of Applicant :**
1)HITACHI LTD.
Address of Applicant :6 6 Marunouchi 1 chome Chiyoda ku Tokyo 1008280 Japan
(72)**Name of Inventor :**
1)HATTORI Satoshi

(57) Abstract :
To control fluctuations in coil diameter caused by local changes in sheet thickness as a result of a necessity for opening the roll gap without rolling in part of the material being rolled. [Solution] This rolling control method rolls the material being rolled takes the same up onto a tension reel and controls the rolling mill such that rolling is avoided by releasing the rolls for a welding point (30) where rolling should be avoided. The rolling control method is characterized by the winding contour during uptake of the welding point (30) onto the tension reel being acquired and the roll release timing for releasing the rolls being acquired such that the length in the feed direction for the part for which rolling is to be avoided is a length corresponding to the winding contour. The rolling control method is further characterized by the timing when the welding point (30) arrives at the rolls being recognized and control being carried out such that the rolls are released based on the roll release timing and the arrival timing.

No. of Pages : 80 No. of Claims : 12

(12) PATENT APPLICATION PUBLICATION
(19) INDIA
(22) Date of filing of Application :16/09/2013
(21) Application No.8105/DELNP/2013 A
(43) Publication Date : 19/12/2014

(54) Title of the invention : COMPOSITIONS AND METHODS USEFUL FOR AMELIORATING AGE RELATED MALADIES

(51) International classification :A61K31/616
(31) Priority Document No :61/465404
(32) Priority Date :18/03/2011
(33) Name of priority country :U.S.A.
(86) International Application No :PCT/US2012/028712
Filing Date :12/03/2012
(87) International Publication No :WO 2012/128982
(61) Patent of Addition to Application Number :NA
Filing Date :NA
(62) Divisional to Application Number :NA
Filing Date :NA

(71)**Name of Applicant :**
1)NESTEC S.A.
Address of Applicant :Avenue Nestle 55 CH 1800 Vevey Switzerland
(72)**Name of Inventor :**
1)SATYARAJ Ebenezer

(57) Abstract :
The invention provides methods and compositions useful for ameliorating age related maladies enhancing and maintaining immune function enhancing and maintaining cognitive function enhancing and maintaining muscle strength enhancing and maintaining balance and reducing and mitigating oxidative stress in an animal. The compositions comprise a combination of at least two of one or more unsaturated fatty acids (UFA); one or more nitric oxide releasing compounds (NORC); one or more anti glycation agents; and colostrum and the methods comprise administering to an animal a therapeutically effective amount of the compositions.

No. of Pages : 34 No. of Claims : 54

(12) PATENT APPLICATION PUBLICATION
(19) INDIA
(22) Date of filing of Application :06/09/2013
(21) Application No.7857/DELNP/2013 A
(43) Publication Date : 19/12/2014

(54) Title of the invention : CRYSTALLINE AND NON CRYSTALLINE FORMS OF TOFACITINIB AND A PHARMACEUTICAL COMPOSITION COMPRISING TOFACITINIB AND A PENETRATION ENHANCER

(51) International classification :C07D487/04,A61K31/519,A61P17/06
(31) Priority Document No :61/473183
(32) Priority Date :08/04/2011
(33) Name of priority country :U.S.A.
(86) International Application No :PCT/IB2012/051531
Filing Date :29/03/2012
(87) International Publication No :WO 2012/137111
(61) Patent of Addition to Application Number :NA
Filing Date :NA
(62) Divisional to Application Number :NA
Filing Date :NA

(71)**Name of Applicant :**
1)PFIZER INC.
Address of Applicant :235 East 42nd Street New York New York 10017 U.S.A.
(72)**Name of Inventor :**
1)MURPHY Brendan J.
2)WHITE Timothy D.
3)CHEKAL Brian P.
4)JOHNSON Phillip J.
5)FOTI Christopher James
6)MARGULIS Leonid A.

(57) Abstract :
The present invention discloses novel crystalline and non crystalline forms of 3 ((3R 4R) 4 methyl 3 [methyl (7H pyrrolo[2 3 d]pyrimidin 4 yl) amino] piperidin 1 yl) 3 oxopropionitrile pharmaceutical composition containing the same preparations thereof and the uses thereof.

No. of Pages : 86 No. of Claims : 28

(12) PATENT APPLICATION PUBLICATION
(19) INDIA
(22) Date of filing of Application :06/09/2013
(21) Application No.7858/DELNP/2013 A
(43) Publication Date : 19/12/2014

(54) Title of the invention : METHOD FOR MANUFACTURING IMPREGNATED FABRIC FOR COMPOSITE ARTICLES AND FABRIC IMPREGNATED BY MEANS OF SUCH A METHOD

(51) International classification :B29C70/22,B29C70/46,B29C70/50
(31) Priority Document No :1152398
(32) Priority Date :23/03/2011
(33) Name of priority country :France
(86) International Application No :PCT/EP2012/055200
Filing Date :23/03/2012
(87) International Publication No :WO 2012/127029
(61) Patent of Addition to Application Number :NA
Filing Date :NA
(62) Divisional to Application Number :NA
Filing Date :NA

(71)**Name of Applicant :**
1)RHODIA OPERATIONS
Address of Applicant :40 rue de la Haie Coq F 93306 Aubervilliers France
(72)**Name of Inventor :**
1)DI MARTINO Audrey

(57) Abstract :
The present invention relates to the use of polyamide of high melt flow in the form of particles having a specific median diameter D50 in the manufacture of impregnated cloths used in the manufacture of composite materials. The field of the invention is that of composite materials and their processes of manufacture.

No. of Pages : 23 No. of Claims : 14

(12) PATENT APPLICATION PUBLICATION
(19) INDIA
(22) Date of filing of Application :16/09/2013
(21) Application No.8100/DELNP/2013 A
(43) Publication Date : 19/12/2014

(54) Title of the invention : BARRIER SYSTEM

(51) International classification :E02B3/10,E02B15/08,E01F7/02
(31) Priority Document No :11162076.1
(32) Priority Date :12/04/2011
(33) Name of priority country :EPO
(86) International Application No :PCT/EP2012/056461
Filing Date :10/04/2012
(87) International Publication No :WO 2012/140017
(61) Patent of Addition to Application Number :NA
Filing Date :NA
(62) Divisional to Application Number :NA
Filing Date :NA

(71)**Name of Applicant :**
1)DSM IP ASSETS B.V.
Address of Applicant :Het Overloon 1 NL 6411 TE Heerlen Netherlands
(72)**Name of Inventor :**
1)MARISSEN Roelof
2)WIENKE Dietrich

(57) Abstract :
The invention relates to a barrier system comprising a barrier wall for stopping a flow of a substance to one side of said wall wherein said barrier wall comprises a fabric impervious to the flow of said substance and containing high strength polyolefin fibers.

No. of Pages : 20 No. of Claims : 15

(12) PATENT APPLICATION PUBLICATION
(19) INDIA
(22) Date of filing of Application :16/09/2013
(21) Application No.8101/DELNP/2013 A
(43) Publication Date : 19/12/2014

(54) Title of the invention : PROCESS FOR THE PREPARATION OF CONDENSATION PRODUCTS OF MELAMINE

(51) International classification :C07D251/70
(31) Priority Document No :11159957.7
(32) Priority Date :28/03/2011
(33) Name of priority country :EPO
(86) International Application No :PCT/EP2012/055386
Filing Date :27/03/2012
(87) International Publication No :WO 2012/130827
(61) Patent of Addition to Application Number :NA
Filing Date :NA
(62) Divisional to Application Number :NA
Filing Date :NA

(71)**Name of Applicant :**
1)DSM IP ASSETS B.V.
Address of Applicant :Het Overloon 1 NL 6411 TE Heerlen Netherlands
(72)**Name of Inventor :**
1)STOELWINDER Christiaan Johannes Cornelis
2)KWANT Gerard Jan

(57) Abstract :
The invention relates to a process for the purification of a melamine condensation product comprising the steps of a) making a diluted slurry of a reaction product mixture comprising the melamine condensation product in a solution of a base in water with a pH of at least 9 b) keeping the diluted slurry for a period of at least 1 hour c) concentrating the diluted slurry thereby obtaining a concentrated slurry and an eluent and d) washing the concentrated slurry by diluting the concentrated slurry with aqueous liquid and repeating step c wherein the washing is performed by counterflow washing wherein eluents of downstream concentration steps are used to wash the slurry in upstream concentration steps.

No. of Pages : 17 No. of Claims : 10

(12) PATENT APPLICATION PUBLICATION
(19) INDIA
(22) Date of filing of Application :16/09/2013
(21) Application No.8102/DELNP/2013 A
(43) Publication Date : 19/12/2014

(54) Title of the invention : METHOD FOR PRODUCING CURED ARTICLE FROM HYDRAULIC COMPOSITION

(51) International classification :C04B28/02
(31) Priority Document No :2011070463
(32) Priority Date :28/03/2011
(33) Name of priority country :Japan
(86) International Application No :PCT/JP2012/058777
Filing Date :26/03/2012
(87) International Publication No :WO 2012/133870
(61) Patent of Addition to Application Number :NA
Filing Date :NA
(62) Divisional to Application Number :NA
Filing Date :NA

(71)**Name of Applicant :**
1)KAO CORPORATION
Address of Applicant :14 10 Nihonbashi Kayabacho 1 chome Chuo ku Tokyo 1038210 Japan
(72)**Name of Inventor :**
1)YOSHINAMI Yusuke
2)HAMAI Toshimasa
3)KAWAKAMI Hiroyuki
4)YOSHIKAWA Yohei

(57) Abstract :
The present invention provides a method for producing a cured article of a hydraulic composition prepared by mixing glycerol cement and water the hydraulic composition containing a sulfate ion the method including step 1 of preparing the hydraulic composition such that a molar ratio of the sulfate ion to the glycerol sulfate ion/glycerol is 5.0 to 20 and the content of the sulfate ion is 3.0 to 15 parts by weight to 100 parts by weight of cement; and step 2 of aging and curing the hydraulic composition obtained in the step 1.

No. of Pages : 58 No. of Claims : 20

(12) PATENT APPLICATION PUBLICATION
(19) INDIA
(22) Date of filing of Application :16/09/2013
(21) Application No.8103/DELNP/2013 A
(43) Publication Date : 19/12/2014

(54) Title of the invention : FOLDABLE TWO WHEELED VEHICLE

(51) International classification :B62K15/00
(31) Priority Document No :P 11 00082
(32) Priority Date :16/02/2011
(33) Name of priority country :Hungary
(86) International Application No :PCT/HU2012/000012
Filing Date :16/02/2012
(87) International Publication No :WO 2012/110836
(61) Patent of Addition to Application Number :NA
Filing Date :NA
(62) Divisional to Application Number :NA
Filing Date :NA

(71)**Name of Applicant :**
1)MOVEO ZRT.
Address of Applicant :Baksaszer u.1/A H 9941 –riszentpter Hungary
(72)**Name of Inventor :**
1)HEGEDS Zsolt
2)VEGES Pter J³zsef
3)HIVESSY Gza J³zsef
4)SLEZ K Tam¡s

(57) Abstract :
The invention is a foldable two wheeled vehicle (10) comprising a structure holding a front wheel (16) and a rear wheel (20) the holding structure being at least partly a self carrying shell structure the self carrying shell structure comprises a nose element (18) holding an axle of the front wheel (16) a front element (14) providing a handlebar force transmission and adjoining to the nose element (18) with a hinge (54) having a hinge axis arranged crosswise to the axle of the front wheel (16) a central element (24) adjoining to the front element (14) with a hinge (86) having a hinge axis arranged in parallel with an axle the rear wheel (20) and a rear element (22) holding the axle of the rear wheel (20) and hingedly joining to the central element (24) by means of an axle (30) arranged in parallel with the axle of the rear wheel (20).

No. of Pages : 35 No. of Claims : 17

(12) PATENT APPLICATION PUBLICATION
(19) INDIA
(22) Date of filing of Application :06/09/2013
(21) Application No.7870/DELNP/2013 A
(43) Publication Date : 19/12/2014

(54) Title of the invention : DEVICE FOR THE FINE MACHINING OF OPTICALLY ACTIVE SURFACES ON IN PARTICULAR SPECTACLE LENSES

(51) International classification :B24B27/00,B24B41/02,B24B41/04
(31) Priority Document No :10 2011 014 230.4
(32) Priority Date :17/03/2011
(33) Name of priority country :Germany
(86) International Application No :PCT/EP2012/001153
Filing Date :15/03/2012
(87) International Publication No :WO 2012/123120
(61) Patent of Addition to Application Number :NA
Filing Date :NA
(62) Divisional to Application Number :NA
Filing Date :NA

(71)**Name of Applicant :**
1)SATISLOH AG
Address of Applicant :Neuhofstrasse 12 CH 6340 Baar Switzerland
(72)**Name of Inventor :**
1)SCH„FER Holger
2)WALLENDORF Steffen
3)FIEDLER Udo

(57) Abstract :
There is disclosed a device (10) for the fine machining of optically active surfaces on in particular spectacle lenses having a spindle shaft (32) which has a tool holder portion (34) and is mounted in a spindle housing (36) such that it can rotate about a tool rotation axis (A) and having an electric rotary drive (38) which has a rotor (40) and a stator (42) and by means of which the spindle shaft operatively connected to the rotor can be driven in rotation about the tool rotation axis while the tool holder portion can be displaced axially in the direction of the tool rotation axis. A particular feature of this device is that the rotor and the stator and the spindle shaft are arranged coaxially in the spindle housing which for its part is guided in a guide tube (44) in a defined axially displaceable manner (2) in the direction of the tool rotation axis wherein the spindle shaft is in the form of a hollow shaft via which the tool holder portion which is configured to hold a membrane chuck (46) can be subjected to a fluid this bringing about in particular a very compact structure and allowing rapid axial compensating movements of the tool during fine machining.

No. of Pages : 35 No. of Claims : 10

(12) PATENT APPLICATION PUBLICATION
(19) INDIA
(22) Date of filing of Application :17/09/2013
(21) Application No.8110/DELNP/2013 A
(43) Publication Date : 19/12/2014

(54) Title of the invention : METHODS FOR IMPROVING BRAIN DEVELOPMENT AND COGNITIVE FUNCTION USING BETA HYDROXY BETA METHYLBUTYRATE

(51) International classification :A23L1/305
(31) Priority Document No :61/443762
(32) Priority Date :17/02/2011
(33) Name of priority country :U.S.A.
(86) International Application No :PCT/US2012/024817
Filing Date :13/02/2012
(87) International Publication No :WO 2012/112419
(61) Patent of Addition to Application Number :NA
Filing Date :NA
(62) Divisional to Application Number :NA
Filing Date :NA

(71)**Name of Applicant :**
1)ABBOTT LABORATORIES
Address of Applicant :100 Abbott Park Road Dept. 0377 AP6A 1 Abbott Park Illinois 60064 U.S.A.
(72)**Name of Inventor :**
1)PEDROSA Jose Maria Lopez
2)MARTIN Manuel Manzano
3)PEREZ Alejandro Barranco
4)GONZALEZ Maria Ramirez
5)CANBRERA Ricardo Rueda

(57) Abstract :
Disclosed are methods for enhancing neural function in an individual such as an older adult. The methods include administering nutritional compositions comprising HMB to the individual. The nutritional compositions provide benefits for individuals that have or may be at risk of having cognitive decline cognitive impairment and neural dysfunction typically resulting from cognitive diseases associated with neurodegenerative diseases.

No. of Pages : 33 No. of Claims : 15

(12) PATENT APPLICATION PUBLICATION
(19) INDIA
(22) Date of filing of Application :17/09/2013
(21) Application No.8111/DELNP/2013 A
(43) Publication Date : 19/12/2014

(54) Title of the invention : MACHINE FOR MANUFACTURING LAMINATIONS FOR A MAGNETIC CORE

(51) International classification :H01F41/02,H01F27/24
(31) Priority Document No :2011901086
(32) Priority Date :24/03/2011
(33) Name of priority country :Australia
(86) International Application No :PCT/AU2011/000757
Filing Date :21/06/2011
(87) International Publication No :WO 2012/126034
(61) Patent of Addition to Application Number :NA
Filing Date :NA
(62) Divisional to Application Number :NA
Filing Date :NA

(71)**Name of Applicant :**
1)AEM CORES PTY LTD
Address of Applicant :95B Bedford Street Gillman Sa 5013 Australia
(72)**Name of Inventor :**
1)TEDORE Peter

(57) Abstract :
A machine (10) for manufacturing stackable laminations (4) for a magnetic core (6) is disclosed. The laminations are formed from a magnetic strip material (2). The machine (10) includes a first electromechanical cam drive for actuating a folder that folds the strip material (2) and a second electromechanical cam drive for actuating a cutter that cuts the strip material (2). The folder and the cutter are independently drivable between an uppermost position and a lowermost position. The folder may include a folder platen (130) having an associated folder bar (150) to fold said strip material (2). The cutter may include a guillotine platen (230) having an associated upper cutting blade (245) that cooperates with a fixed lower blade (255) for cutting said strip material (2). The electromechanical cam drive may include any suitable electric actuator (100 200) such as an electric motor.

No. of Pages : 36 No. of Claims : 23

(12) PATENT APPLICATION PUBLICATION
(19) INDIA
(22) Date of filing of Application :17/09/2013
(21) Application No.8112/DELNP/2013 A
(43) Publication Date : 19/12/2014

(54) Title of the invention : SPRAY DRIED LAUNDRY DETERGENT PARTICLES

(51) International classification :C11D3/04,C11D11/02
(31) Priority Document No :11159799.3
(32) Priority Date :25/03/2011
(33) Name of priority country :EPO
(86) International Application No :PCT/US2012/030224
Filing Date :23/03/2012
(87) International Publication No :WO 2012/134969
(61) Patent of Addition to Application Number :NA
Filing Date :NA
(62) Divisional to Application Number :NA
Filing Date :NA

(71)**Name of Applicant :**
1)THE PROCTER & GAMBLE COMPANY
Address of Applicant :One Procter & Gamble Plaza Cincinnati Ohio 45202 U.S.A.
(72)**Name of Inventor :**
1)TANTAWY Hossam Hassan
2)LATIMER Andrew
3)PATTON Andrew Brian Greenaway

(57) Abstract :
Spray dried laundry detergent particles comprising: (a) organic anionic detersive surfactant; (b) water soluble inorganic salt selected from the group consisting of sodium carbonate and/or sodium sulphate; (c) essentially no zeolite builder; (d) essentially no phosphate builder; (e) essentially no bleach; (f) essentially no clay; (g) essentially no non ionic detersive surfactant; and (h) other detergent ingredients wherein from 5wt% to 25wt% of the particles are small particles having a particle size of less than 250 micrometers wherein from 75wt% to 95wt% of the particles are large particles having a particle size of 250 micrometers or greater wherein the ratio of the organic carbon content of the small particles in weight percent to the organic carbon content of the large particles in weight percent is in the range of from 1.00 to 1.20 and wherein the water soluble inorganic salt has a volume average particle size in the range of from 10 micrometers to 50 micrometers.

No. of Pages : 19 No. of Claims : 7

(12) PATENT APPLICATION PUBLICATION
(19) INDIA
(22) Date of filing of Application :09/09/2013
(21) Application No.7877/DELNP/2013 A
(43) Publication Date : 19/12/2014

(54) Title of the invention : AUTOMATED PASSENGER SCREENING CHECKPOINT

(51) International classification :G06Q10/08
(31) Priority Document No :61/451358
(32) Priority Date :10/03/2011
(33) Name of priority country :U.S.A.
(86) International Application No :PCT/US2012/027825
Filing Date :06/03/2012
(87) International Publication No :WO 2012/122148
(61) Patent of Addition to Application Number :NA
Filing Date :NA
(62) Divisional to Application Number :NA
Filing Date :NA

(71)**Name of Applicant :**
1)SIEMENS INDUSTRY INC.
Address of Applicant :3333 Old Milton Parkway Alpharetta Georgia 30005 4437 U.S.A.
(72)**Name of Inventor :**
1)CARPENTER Michael D.
2)SIPE Stanley W.
3)WORTH II Floyd W.

(57) Abstract :
As automated screening system and method. A method includes receiving a personal identifier from an individual at an induction kiosk and issuing a scanning unit at the induction kiosk. The method includes associating the scanning unit with the personal identifier and inducting the scanning unit including at least one item added by the individual at the induction kiosk. The method includes conveying the scanning unit to an imaging device and imaging the scanning unit and the item to produce a scanned image. The method includes receiving the personal identifier at a return kiosk and returning the scanning unit and the item to the individual based on the association between the scanning unit and the personal identifier.

No. of Pages : 27 No. of Claims : 19

(12) PATENT APPLICATION PUBLICATION
(19) INDIA
(22) Date of filing of Application :09/09/2013
(21) Application No.7879/DELNP/2013 A
(43) Publication Date : 19/12/2014

(54) Title of the invention : DELAYED RELEASE WELL TREATMENT COMPOSITES FOR USE IN WELL TREATMENT FLUIDS

(51) International classification :C09K8/536,C09K8/60,C09K8/70
(31) Priority Document No :13/076304
(32) Priority Date :30/03/2011
(33) Name of priority country :U.S.A.
(86) International Application No :PCT/US2011/039142
Filing Date :03/06/2011
(87) International Publication No :WO 2012/134506
(61) Patent of Addition to Application Number :NA
Filing Date :NA
(62) Divisional to Application Number :NA
Filing Date :NA

(71)**Name of Applicant :**
1)BAKER HUGHES INCORPORATED
Address of Applicant :2929 Allen Parkway Suite 2100 Houston Texas 77019 U.S.A.
(72)**Name of Inventor :**
1)STEINER William H.

(57) Abstract :
A well treatment composite comprising a well treatment agent adsorbed onto a water insoluble adsorbent may be prepared by precipitating the well treatment agent in the presence of a metal salt from a liquid while the well treatment agent is being adsorbed onto the water insoluble adsorbent. After a treatment fluid containing the composite is introduced into a well or a subterranean formation the well treatment agent is slowly released from the composite. The composite permits a continuous supply of the well treatment agent into a targeted area and is particularly effective in high pH treatment fluids.

No. of Pages : 23 No. of Claims : 38

(12) PATENT APPLICATION PUBLICATION
(19) INDIA
(22) Date of filing of Application :17/09/2013
(21) Application No.8118/DELNP/2013 A
(43) Publication Date : 19/12/2014

(54) Title of the invention : METHODS FOR DETERMINING METHANOL CONTENT IN CRUDE OILS

(51) International classification :G01N33/28,G01N1/40,B01D11/04
(31) Priority Document No :61/498867
(32) Priority Date :20/06/2011
(33) Name of priority country :U.S.A.
(86) International Application No :PCT/US2012/043104
Filing Date :19/06/2012
(87) International Publication No :WO 2012/177610
(61) Patent of Addition to Application Number :NA
Filing Date :NA
(62) Divisional to Application Number :NA
Filing Date :NA

(71)**Name of Applicant :**
1)EXXONMOBIL RESEARCH AND ENGINEERING COMPANY
Address of Applicant :1545 Route 22 East P.O. Box 900 Annandale NJ 08801 0900 U.S.A.
(72)**Name of Inventor :**
1)DISANZO Frank P.
2)SHI Eric S.
3)SHIBASAKI Masato
4)YAMAMOTO Shigeharu
5)MORITA Hisao
6)TAKAYAMA Norio

(57) Abstract :
A test method for the determination of methanol in crude oils to levels as low as 0.5 ppm is disclosed. The method includes extracting methanol into a water phase from a test sample of the crude oil forming a test sample extract. The method further includes extracting methanol into a water phase from a reference sample of the crude oil forming a reference sample extract wherein the reference sample having a predetermined amount of methanol added thereto. The method further includes measuring the methanol content in the test sample extract and the methanol content in the reference sample extract. The method also includes determining the methanol content of the crude oil based upon the methanol content in the test sample extract and the methanol content in the reference sample extract.

No. of Pages : 18 No. of Claims : 21

(12) PATENT APPLICATION PUBLICATION
(19) INDIA
(22) Date of filing of Application :17/09/2013
(21) Application No.8119/DELNP/2013 A
(43) Publication Date : 19/12/2014

(54) Title of the invention : MACHINE FOR FORMING METAL BARS

(51) International classification :B22D7/00,B22D9/00
(31) Priority Document No :VI2011A000076
(32) Priority Date :01/04/2011
(33) Name of priority country :Italy
(86) International Application No :PCT/EP2012/001377
Filing Date :29/03/2012
(87) International Publication No :WO 2012/130451
(61) Patent of Addition to Application Number :NA
Filing Date :NA
(62) Divisional to Application Number :NA
Filing Date :NA

(71)**Name of Applicant :**
1)IECO KEEPS ON IMPROVING S.R.L.
Address of Applicant :Via Monte Verena 20 I 36022 San Zeno Dl Cassola (VI) Italy
(72)**Name of Inventor :**
1)FAORO Giovanni

(57) Abstract :
Herein provided is a machine for forming metal bars in particular suitable for melting and the subsequent continuous solidification of a precious metal such as gold silver precious alloys as well as other pure metals or different alloys in form of powder grits or swarf of various sizes for producing ingots having weight varying from 50 g to 50 kg. In particular such machine has six operating stations (101 106) arranged in succession.

No. of Pages : 19 No. of Claims : 16

(12) PATENT APPLICATION PUBLICATION
(19) INDIA
(22) Date of filing of Application :17/09/2013
(21) Application No.8121/DELNP/2013 A
(43) Publication Date : 19/12/2014

(54) Title of the invention : TREPHINE

(51) International classification :A61F2/08,A61B17/16,A61B17/17
(31) Priority Document No :61/451749
(32) Priority Date :11/03/2011
(33) Name of priority country :U.S.A.
(86) International Application No :PCT/US2012/028803
Filing Date :12/03/2012
(87) International Publication No :WO 2012/125578
(61) Patent of Addition to Application Number :NA
Filing Date :NA
(62) Divisional to Application Number :NA
Filing Date :NA

(71)**Name of Applicant :**
1)SMITH & NEPHEW INC.
Address of Applicant :1450 Brooks Road Memphis TN 38116 U.S.A.
(72)**Name of Inventor :**
1)FAN Wei Li
2)BOURQUE Bernard J.
3)BLOUGH Rebecca Ann
4)GRAF Ben Kim
5)DAVIS William R.

(57) Abstract :
The present invention relates to medical apparatuses and procedures for reconstructing a ligament. There is provided a trephine (10) com¬ prising an adaptor (11) an elongate reamer (12) coupled thereto and a reamer support stem (13) wherein the reamer support stem is mounted concentrically within the reamer and adaptor and where¬ in at least a portion of the reamer support stem is slidably moveable about a longitudinal axis of the trephine.

No. of Pages : 37 No. of Claims : 19

(12) PATENT APPLICATION PUBLICATION
(19) INDIA
(22) Date of filing of Application :22/07/2013
(21) Application No.6536/DELNP/2013 A
(43) Publication Date : 19/12/2014

(54) Title of the invention : PHARMACEUTICAL COMPOSITIONS OF PYRIDINIUM AND QUINOLINIUM DERIVATIVES

(51) International classification	:A61K9/127,A61K47/48,A61K31/4425
(31) Priority Document No	:10382348.0
(32) Priority Date	:23/12/2010
(33) Name of priority country	:EPO
(86) International Application No Filing Date	:PCT/EP2011/073722 :22/12/2011
(87) International Publication No	:WO 2012/085171
(61) Patent of Addition to Application Number Filing Date	:NA :NA
(62) Divisional to Application Number Filing Date	:NA :NA

(71)**Name of Applicant :**
1)TRASLATIONAL CANCER DRUGS PHARMA S.L.
Address of Applicant :Jos Antonio Primo de Rivera 4 2° izda E 47001 Valladolid Spain
(72)**Name of Inventor :**
1)PALACIOS IZQUIERDO Beatriz
2)VAN HOOGEVEST Peter
3)L.S. LEIGH Mathew

(57) Abstract :
The present invention relates to pharmaceutical compositions comprising a compound of formula (I) and a cyclodextrin or a liposome to the process of preparing said compositions and their use for antitumor antiviral antiparasitic and antifungal treatment.

No. of Pages : 21 No. of Claims : 16

(12) PATENT APPLICATION PUBLICATION
(19) INDIA
(22) Date of filing of Application :09/09/2013
(21) Application No.7890/DELNP/2013 A
(43) Publication Date : 19/12/2014

(54) Title of the invention : BRICK LAYING JIG

(51) International classification :E04G21/18
(31) Priority Document No :2011/01062
(32) Priority Date :09/02/2011
(33) Name of priority country :South Africa
(86) International Application No :PCT/IB2012/050547
Filing Date :07/02/2012
(87) International Publication No :WO 2012/107878
(61) Patent of Addition to Application Number :NA
Filing Date :NA
(62) Divisional to Application Number :NA
Filing Date :NA

(71)**Name of Applicant :**
1)DALLA TORRE Giuseppe
Address of Applicant :3 Tuscani Lofts 43 Van Tonder Road 1613 Edenglen South Africa
(72)**Name of Inventor :**
1)DALLA TORRE Giuseppe

(57) Abstract :
A brick laying fixture tool having an operatively linearly actuated elevator car (12) for parallel vertical displacement on a linear gear of a vertical shaft (16). The fixture tool has a horizontal fixture guide (54.1; 54.2) wherein a brick laying guide such as a square tube may be located in use and a drive mechanism in the form of a ratchet whereby the elevator car is advanced upwardly from a lower discrete height interval to a next higher discrete height interval such that the brick laying guide attached to the fixture tool is raised parallel to its prior position at a lower discrete height interval.

No. of Pages : 23 No. of Claims : 35

(12) PATENT APPLICATION PUBLICATION
(19) INDIA
(22) Date of filing of Application :09/09/2013
(21) Application No.7891/DELNP/2013 A
(43) Publication Date : 19/12/2014

(54) Title of the invention : A METHOD OF AND A SUPPORT NODE FOR REQUESTING REGISTRATION OF STATIONARY USER EQUIPMENT IN A CELLULAR TELECOMMUNICATION SYSTEM

(51) International classification :H04L29/06
(31) Priority Document No :NA
(32) Priority Date :NA
(33) Name of priority country :NA
(86) International Application No :PCT/EP2011/055219
Filing Date :04/04/2011
(87) International Publication No :WO 2012/136246
(61) Patent of Addition to Application Number :NA
Filing Date :NA
(62) Divisional to Application Number :NA
Filing Date :NA

(71)**Name of Applicant :**
1)Telefonaktiebolaget LM Ericsson (publ)
Address of Applicant :S 164 83 Stockholm Sweden
(72)**Name of Inventor :**
1)CARBO MALONDA Francisco Borja

(57) Abstract :
Method (71) of and support node (23; 52 53; 81) for requesting registration of stationary user equipment in a cellular telecommunication system (12; 20; 51). The system (12; 20; 51) comprising at least one support node (23; 52 53; 81) for providing communication services to a plurality of users comprising mobile and stationary user equipment (2 9; 21) each user equipment (2 9; 21) having a unique equipment identity. Upon receipt of a registration request (28; 54; 72) of a user equipment (2 9; 21) the support node (23; 52 53; 81) determines (35; 73) whether the user equipment (2 9; 21) is stationary user equipment and compares (74) received location information and equipment identity of stationary user equipment with location information and equipment identity of the stationary user equipment stored (14) in the telecommunication system. The registration request (28; 54; 72) is rejected (61; 77) if the comparison does not match (75 No).

No. of Pages : 32 No. of Claims : 15

(12) PATENT APPLICATION PUBLICATION
(19) INDIA
(22) Date of filing of Application :09/09/2013

(21) Application No.7892/DELNP/2013 A
(43) Publication Date : 19/12/2014

(54) Title of the invention : ILLUMINATED BALLOON

(51) International classification :A63H27/10
(31) Priority Document No :1104442.7
(32) Priority Date :16/03/2011
(33) Name of priority country :U.K.
(86) International Application No :PCT/GB2012/050568
Filing Date :15/03/2012
(87) International Publication No :WO 2012/123747
(61) Patent of Addition to Application Number :NA
Filing Date :NA
(62) Divisional to Application Number :NA
Filing Date :NA

(71)**Name of Applicant :**
1)SEATRIEVER INTERNATIONAL HOLDINGS LIMITED
Address of Applicant :Unit 9 Mallory House Goostry Way Mobberley Cheshire WA16 7GY U.K.
(72)**Name of Inventor :**
1)HALLIBURTON James
2)RHOADES Tony
3)TISDALL Sean
4)BISHOP James

(57) Abstract :
In respect of a balloon (10) having an illumination device (20) including a light emitting member which is mounted onto the wall inside the balloon cavity at least one sheet (22 24) of flexible material is connected to the illumination device inside the balloon cavity to serve as a parachute for the illumination device (20) in the event of rupture of the wall of the balloon when in an inflated condition. In embodiments where the illumination device is provided with a projection (12) and is mounted to the wall of the balloon by an attachment element such as elastic band (18) engaging said projection from outside the balloon the or each sheet of flexible material (22 24) serving as the parachute may be connected to the illumination device (20) and to the balloon wall by location over the projection (12) and engagement by the same attachment member.

No. of Pages : 14 No. of Claims : 15

(12) PATENT APPLICATION PUBLICATION
(19) INDIA
(22) Date of filing of Application :17/09/2013
(21) Application No.8143/DELNP/2013 A
(43) Publication Date : 19/12/2014

(54) Title of the invention : GLASS SUBSTRATE WITH SLIGHTLY ROUGH LAYER

(51) International classification :C03C17/34,C23C14/00
(31) Priority Document No :1152873
(32) Priority Date :04/04/2011
(33) Name of priority country :France
(86) International Application No :PCT/FR2012/050690
Filing Date :30/03/2012
(87) International Publication No :WO 2012/136919
(61) Patent of Addition to Application Number :NA
Filing Date :NA
(62) Divisional to Application Number :NA
Filing Date :NA

(71)**Name of Applicant :**
1)SAINT GOBAIN GLASS FRANCE
Address of Applicant :18 avenue dAlsace F 92400 Courbevoie France
(72)**Name of Inventor :**
1)POPOFF Alexandre
2)NGHIEM Bernard

(57) Abstract :
The invention relates to a glass substrate characterized in that it is provided with a layer constituted of crystallites of at least 25 nm covered directly with a layer constituted of crystallites of at most 10 nm; the process for manufacturing same; the applications thereof in a photovoltaic cell electrode as low emissivity glazing or in solar control.

No. of Pages : 8 No. of Claims : 9

(12) PATENT APPLICATION PUBLICATION
(19) INDIA
(22) Date of filing of Application :09/09/2013
(21) Application No.7882/DELNP/2013 A
(43) Publication Date : 19/12/2014

(54) Title of the invention : AWL SCREW FIXATION MEMBERS AND RELATED SYSTEMS

(51) International classification :A61F2/44,A61B17/80,A61B17/86
(31) Priority Document No :NA
(32) Priority Date :NA
(33) Name of priority country :NA
(86) International Application No :PCT/US2011/027849
Filing Date :10/03/2011
(87) International Publication No :WO 2012/121726
(61) Patent of Addition to Application Number :NA
Filing Date :NA
(62) Divisional to Application Number :NA
Filing Date :NA

(71)**Name of Applicant :**
1)DEPUY SYNTHES PRODUCTS LLC
Address of Applicant :325 Paramount Drive Raynham MA 02767 U.S.A.
2)SYNTHES GMBH
(72)**Name of Inventor :**
1)SCHOENLY Jared
2)EVANS David
3)FENN Matthew

(57) Abstract :
Provided are fixation members (99f) useful in fixing an implant to a bone. The fixation members (99f) include an awl tip (104) so as to enable their secure installation by use of an awling motion which in turn speeds the installation of the fixation members.

No. of Pages : 51 No. of Claims : 28

(12) PATENT APPLICATION PUBLICATION
(19) INDIA
(22) Date of filing of Application :17/09/2013
(21) Application No.8136/DELNP/2013 A
(43) Publication Date : 19/12/2014

(54) Title of the invention : MOTOR VEHICLE EXHAUST GAS RECIRCULATION VALVE ARRANGEMENT

(51) International classification :F02M25/07,F16K31/04
(31) Priority Document No :10 2011 001 535.3
(32) Priority Date :24/03/2011
(33) Name of priority country :Germany
(86) International Application No :PCT/EP2012/054777
Filing Date :19/03/2012
(87) International Publication No :WO 2012/126876
(61) Patent of Addition to Application Number :NA
Filing Date :NA
(62) Divisional to Application Number :NA
Filing Date :NA

(71)**Name of Applicant :**
1)PIERBURG GMBH
Address of Applicant :Alfred Pierburg Str. 1 41460 Neuss Germany
(72)**Name of Inventor :**
1)SIMONS Norbert

(57) Abstract :
The invention relates to a motor vehicle exhaust gas recirculation valve arrangement (10) for an exhaust gas recirculation system of an internal combustion engine having an electric drive motor (12) with a motor shaft (14) and with a motor pinion (16). The motor vehicle exhaust gas recirculation valve arrangement (10) furthermore has an intermediate shaft (18) with a drive output gear (20) which meshes with the motor pinion (16). An eccentric shaft (22) has a drive input gear (24) which meshes with an intermediate shaft pinion (19) and an eccentric (26). Furthermore the motor vehicle exhaust gas recirculation valve arrangement (10) also has a valve drive with a valve disk (32) a valve rod (34) and a slotted link (28) into which the eccentric (26) engages wherein the intermediate shaft (18) is arranged laterally adjacent to the eccentric shaft (22) in such a way that the eccentric (26) and the slotted link (28) are situated directly adjacent to the drive motor (12).

No. of Pages : 14 No. of Claims : 5

(12) PATENT APPLICATION PUBLICATION
(19) INDIA
(22) Date of filing of Application :17/09/2013
(21) Application No.8137/DELNP/2013 A
(43) Publication Date : 19/12/2014

(54) Title of the invention : COATING AGENT COMPOSITIONS COATINGS MADE THEREFROM AND EXHIBITING HIGH SCRATCH RESISTANCE AND GOOD POLISHABILITY AND USE THEREOF

(51) International classification :C08G18/28,C08G18/72,C08G18/79
(31) Priority Document No :61/494910
(32) Priority Date :09/06/2011
(33) Name of priority country :U.S.A.
(86) International Application No :PCT/EP2012/059611
Filing Date :23/05/2012
(87) International Publication No :WO 2012/168079
(61) Patent of Addition to Application Number :NA
Filing Date :NA
(62) Divisional to Application Number :NA
Filing Date :NA

(71)**Name of Applicant :**
1)BASF Coatings GmbH
Address of Applicant :Glasuritstrasse 1 48165 M¼nster Germany
(72)**Name of Inventor :**
1)GROENEWOLT Matthijs
2)KLEIN G¼nter
3)HILGE Oliver
4)AUSTRUP Berthold
5)HUEBNER Katharina

(57) Abstract :
The invention relates to non aqueous coating agent compositions containing: (A) at least one polyhydroxyl group containing compound; (B1) at least one polyisocyanate group containing compound (B1) having free or blocked isocyanate groups and a cycloaliphatic polyisocyanate body and/or a polyisocyanate derived from said compound (B1); (B2) at least one polyisocyanate group containing compound (B2) having free or blocked isocyanate groups and an acyclic aliphatic polyisocyanate body and/or a polyisocyanate derived from said compound (B2); and (D) at least one catalyst for crosslinking silane groups. Component (B1) and/or component (B2) contain/s at least one structural unit NR (X SiRx(OR)3 x) (I) and/or at least one structural unit N(X SiRx(OR)3 x)n(X SiRy(OR)3 y)m (II) compound (B1) is used at such an quantity that the percentage of binder(s) in compound (B1) amounts to 5 to 45% by weight in relation to the sum of binder percentages in compounds (B1) and (B2) and the mixture of components (B1) and (B2) contains both structural units (I) and structural units (II). The invention further relates to multistage coating methods and the use of the coating agent compositions.

No. of Pages : 51 No. of Claims : 16

(12) PATENT APPLICATION PUBLICATION
(19) INDIA
(22) Date of filing of Application :17/09/2013
(21) Application No.8139/DELNP/2013 A
(43) Publication Date : 19/12/2014

(54) Title of the invention : IMPROVED LINK FOR LINEAR CABLE CARRY CHAIN

(51) International classification :F16G13/16
(31) Priority Document No :NA
(32) Priority Date :NA
(33) Name of priority country :NA
(86) International Application No :PCT/AU2011/000340
Filing Date :25/03/2011
(87) International Publication No :WO 2012/129588
(61) Patent of Addition to Application Number :NA
Filing Date :NA
(62) Divisional to Application Number :NA
Filing Date :NA

(71)**Name of Applicant :**
1)COBRACO IP PTY LIMITED
Address of Applicant :c/ 41 Cresent Avenue Tare New South Wales 2430 Australia
(72)**Name of Inventor :**
1)DALY Paul Anthony

(57) Abstract :
A link for a linear carrier chain is disclosed said link including side and end walls connected together to form a duct for a hose cable or the like said walls being connected by means of flanges adjacent edges of some of said walls said flanges being slidably engaged in slots in others of said walls and wherein said flanges are disposed at outwardly directed oblique angles to reduce stress concentrations at the base thereof.

No. of Pages : 18 No. of Claims : 13

(12) PATENT APPLICATION PUBLICATION
(19) INDIA
(22) Date of filing of Application :09/09/2013
(21) Application No.7899/DELNP/2013 A
(43) Publication Date : 19/12/2014

(54) Title of the invention : BLOOD COLLECTION DEVICE CONTAINING LYSOPHOSPHOLIPASE INHIBITOR

(51) International classification :G01N33/50
(31) Priority Document No :61/449337
(32) Priority Date :04/03/2011
(33) Name of priority country :U.S.A.
(86) International Application No :PCT/US2012/027391
Filing Date :02/03/2012
(87) International Publication No :WO 2012/121998
(61) Patent of Addition to Application Number :NA
Filing Date :NA
(62) Divisional to Application Number :NA
Filing Date :NA

(71)**Name of Applicant :**
1)BECTON DICKINSON AND COMPANY
Address of Applicant :1 Becton Drive Franklin Lakes NJ 07417 U.S.A.
(72)**Name of Inventor :**
1)CRAFT David
2)APTE Priyanka

(57) Abstract :
Disclosed are collection devices for collecting and stabilizing whole blood or a component thereof which include a first end and a second end and at least one interior wall defining a reservoir wherein the reservoir contains a stabilization agent that includes a lysophospholipase (LysoPLA) inhibitor. Also disclosed are methods for making and using the devices.

No. of Pages : 46 No. of Claims : 23

(12) PATENT APPLICATION PUBLICATION
(19) INDIA
(22) Date of filing of Application :18/09/2013
(21) Application No.8156/DELNP/2013 A
(43) Publication Date : 19/12/2014

(54) Title of the invention : HIGH STRENGTH COLD ROLLED STEEL SHEET WITH EXCELLENT LOCAL FORMABILITY AND MANUFACTURING METHOD THEREFOR

(51) International classification :C22C38/00,C21D9/46,C22C38/06
(31) Priority Document No :2011089250
(32) Priority Date :13/04/2011
(33) Name of priority country :Japan
(86) International Application No :PCT/JP2012/060065
Filing Date :12/04/2012
(87) International Publication No :WO 2012/141263
(61) Patent of Addition to Application Number :NA
Filing Date :NA
(62) Divisional to Application Number :NA
Filing Date :NA

(71)**Name of Applicant :**
1)NIPPON STEEL & SUMITOMO METAL CORPORATION
Address of Applicant :6 1 Marunouchi 2 chome Chiyoda ku Tokyo 1008071 Japan
(72)**Name of Inventor :**
1)SUWA Yoshihiro
2)NAKANO Kazuaki
3)HAYASHI Kunio
4)OKAMOTO Riki
5)FUJITA Nobuhiro
6)SANO Kohichi

(57) Abstract :
This high-strength cold-rolled steel sheet contains, in mass%, C: 0.02% to 0.20%; Si: 0.001% to 2.5%; Mn: 0.01% to 4.0%; P: 0.001% to 0.15%; S: 0.0005% to 0.03%; Al: 0.001% to 2.0%; N: 0.0005% to 0.01%; and O: 0.0005% to 0.01%; in which Si + Al is limited to less than 1.0%, and a balance being composed of iron and inevitable impurities, in which an area ratio of bainite in a metal structure is 95% or more, at a sheet thickness center portion being a range of 5/8 to 3/8 in sheet thickness from the surface of the steel sheet, an average value of pole densities of the {100}<011> to {223}<110> orientation group is 4.0 or less, and a pole density of the {332}<113> crystal orientation is 5.0 or less, and a mean volume diameter of crystal grains in the metal structure is 7 urn or less.

No. of Pages : 70 No. of Claims : 13

(12) PATENT APPLICATION PUBLICATION
(19) INDIA
(22) Date of filing of Application :18/09/2013
(21) Application No.8157/DELNP/2013 A
(43) Publication Date : 19/12/2014

(54) Title of the invention : SILENCER DEVICE AND MOTOR VEHICLE COMPRISING SUCH A SILENCER DEVICE

(51) International classification :F04B39/00,B60T17/00,F01N1/02
(31) Priority Document No :11503760
(32) Priority Date :29/04/2011
(33) Name of priority country :Sweden
(86) International Application No :PCT/SE2012/050396
Filing Date :12/04/2012
(87) International Publication No :WO 2012/148343
(61) Patent of Addition to Application Number :NA
Filing Date :NA
(62) Divisional to Application Number :NA
Filing Date :NA

(71)**Name of Applicant :**
1)SCANIA CV AB
Address of Applicant :S 151 87 Sdertlje Sweden
(72)**Name of Inventor :**
1)GOD David
2)GLAV Ragnar
3)KJELLSTR–M Lars

(57) Abstract :
The invention relates to a silencer device (10) for connection to a piston compressor of a motor vehicle which device comprises a housing (11) with an inlet (12) intended for connection to a suction line or to an air outlet of a piston compressor and an outlet (13) intended for connection to an air inlet of a piston compressor or to a compressed air line a throughflow duct (20) extending through the housing from the inlet to the outlet to allow air to flow from the inlet to the outlet via this throughflow duct (20) and a quarter wave resonator (30) situated in the housing and comprising an elongate resonator duct (31) which is curved in its longitudinal direction has at its one end an inlet aperture (32) situated in a wall of the throughflow duct and has a cross sectional area larger than or equal to that of the throughflow duct the other end (33) of the resonator duct being closed. The invention relates also to a motor vehicle provided with such a silencer device.

No. of Pages : 22 No. of Claims : 9

(12) PATENT APPLICATION PUBLICATION
(19) INDIA
(22) Date of filing of Application :18/09/2013
(21) Application No.8158/DELNP/2013 A
(43) Publication Date : 19/12/2014

(54) Title of the invention : WALL MOUNTED AND COUNTERTOP MOUNTED DISPENSER

(51) International classification :B65D25/46,B67D7/84
(31) Priority Document No :13/051385
(32) Priority Date :18/03/2011
(33) Name of priority country :U.S.A.
(86) International Application No :PCT/US2012/029047
Filing Date :14/03/2012
(87) International Publication No :WO 2012/129023
(61) Patent of Addition to Application Number :NA
Filing Date :NA
(62) Divisional to Application Number :NA
Filing Date :NA

(71)**Name of Applicant :**
1)GOJO INDUSTRIES INC.
Address of Applicant :One GOJO Plaza Suite 500 P.O. Box 991 Akron Ohio 44309 U.S.A.
(72)**Name of Inventor :**
1)ARCHER Matthew

(57) Abstract :
A dispenser that may be mounted on a wall or a countertop includes a housing having a fin shape. The housing includes a front cover and a back cover. The front cover and back cover define a leading surface and a trailing surface of a fin shape. The dispenser includes a nozzle assembly and the shape of the dispenser creates a dispensing area near the nozzle assembly and the trailing surface of the fin shape.

No. of Pages : 25 No. of Claims : 19

(12) PATENT APPLICATION PUBLICATION
(19) INDIA
(22) Date of filing of Application :18/09/2013
(21) Application No.8159/DELNP/2013 A
(43) Publication Date : 19/12/2014

(54) Title of the invention : COOLING SYSTEM FOR COOLING OF A COMBUSTION ENGINE

(51) International classification :F01P7/16,F16K31/64
(31) Priority Document No :11503794
(32) Priority Date :29/04/2011
(33) Name of priority country :Sweden
(86) International Application No :PCT/SE2012/050397
Filing Date :12/04/2012
(87) International Publication No :WO 2012/148344
(61) Patent of Addition to Application Number :NA
Filing Date :NA
(62) Divisional to Application Number :NA
Filing Date :NA

(71)**Name of Applicant :**
1)SCANIA CV AB
Address of Applicant :S 151 87 Sdertlje Sweden
(72)**Name of Inventor :**
1)WIKSTR–M Hans

(57) Abstract :
The present invention relates to a cooling system for cooling of a combustion engine (1). The system comprises a pilot line (12) which has an inlet (12a) to receive coolant from a line (3) of the cooling system and a thermostat (6) comprising a sensing element (6b) adapted to monitoring the temperature of the coolant in the pilot line (12) and a valve (6a). The cooling system comprises a thermal device (13 26 31) in contact with the coolant in the pilot line (12) at a location upstream of the sensing element (6b) and a control unit (15) adapted to estimating when it is appropriate to alter the coolant s operating temperature in the cooling system and at such times to activating the thermal device (13 26 31) so that it warms or cools the coolant in the pilot line (12).

No. of Pages : 21 No. of Claims : 9

(12) PATENT APPLICATION PUBLICATION
(19) INDIA
(22) Date of filing of Application :09/09/2013

(21) Application No.7906/DELNP/2013 A
(43) Publication Date : 19/12/2014

(54) Title of the invention : HERBICIDAL COMPOUNDS

(51) International classification :C07D237/14,C07D401/04,A01N43/58
(31) Priority Document No :1106062.1
(32) Priority Date :08/04/2011
(33) Name of priority country :U.K.
(86) International Application No :PCT/EP2012/056162
Filing Date :04/04/2012
(87) International Publication No :WO 2012/136703
(61) Patent of Addition to Application Number :NA
Filing Date :NA
(62) Divisional to Application Number :NA
Filing Date :NA

(71)**Name of Applicant :**
1)SYNGENTA LIMITED
Address of Applicant :European Regional Centre Priestley Road Surrey Research Park Guildford Surrey GU2 7YH U.K.
(72)**Name of Inventor :**
1)DALLIMORE Jonathan

(57) Abstract :
THE PRESENT INVENTION RELATES TO NOVEL HERBICIDAL COMPOUNDS OF FORMULA (I) OR AN AGRONOMICALLY ACCEPTABLE SALT OF SAID COMPOUND WHEREIN R R A R R R AND R ARE AS DEFINED HEREIN. THE INVENTION FURTHER RELATES TO COMPOSITIONS WHICH COMPRISE THE HERBICIDAL COMPOUNDS AND TO THEIR USE FOR CONTROLLING WEEDS IN PARTICULAR IN CROPS OF USEFUL PLANTS.

No. of Pages : 30 No. of Claims : 9

(12) PATENT APPLICATION PUBLICATION
(19) INDIA
(22) Date of filing of Application :09/09/2013
(21) Application No.7907/DELNP/2013 A
(43) Publication Date : 19/12/2014

(54) Title of the invention : WINDING SWITCHING CIRCUIT AND THERMAL PROTECTION FOR DUAL VOLTAGE HERMETIC INDUCTION MOTOR OF HERMETIC COOLING COMPRESSOR

(51) International classification :H02P1/42,H02P4/00,H02K11/00
(31) Priority Document No :Pl11018828
(32) Priority Date :25/02/2011
(33) Name of priority country :Brazil
(86) International Application No :PCT/BR2012/000039
Filing Date :24/02/2012
(87) International Publication No :WO 2012/113048
(61) Patent of Addition to Application Number :NA
Filing Date :NA
(62) Divisional to Application Number :NA
Filing Date :NA

(71)**Name of Applicant :**
1)WHIRLPOOL. S.A
Address of Applicant :Av. Das Na§µes Unidas 12. 99532° andar Broolin Novo 04578 000 S£o paulo SP Brazil
(72)**Name of Inventor :**
1)KALLUF Flavio J.H.
2)ESPINDOLA Aleandro Armauri de

(57) Abstract :
The present invention refers to a winding switching circuit and thermal protection for dual voltage hermetic induction motors used in hermetic cooling compressors the circuit comprising two coils of the main winding (M1 and M2) an auxiliary winding (A) three switches (R1 R2 and R3) that are connected and disconnected based on the desired connections for each of the power arrangements (115V or 220V) a start up relay (R) and thermal protection means that protect the two main windings (M1 M2) from overheating and the circuit is operative in a first and in a second arrangements where in the first arrangement the first switch (R1) and the third switch (R3) are connected the second switch (R2) is disconnected and the first main winding (M1) and second main winding (M2) and the auxiliary winding (A) are connected in parallel; and in the second arrangement the first switch (R1) and the third switch (R3) are disconnected the second switch (R2) is connected and the first main winding (M1) and the second main winding (M2) are connected in series and the auxiliary winding (A) is connected in parallel only to the second main winding (M2).

No. of Pages : 24 No. of Claims : 13

(12) PATENT APPLICATION PUBLICATION
(19) INDIA
(22) Date of filing of Application :18/09/2013
(21) Application No.8163/DELNP/2013 A
(43) Publication Date : 19/12/2014

(54) Title of the invention : HOT ROLLED STEEL SHEET AND PROCESS FOR PRODUCING SAME

(51) International classification :C22C38/14,C22C38/58,C21D8/02
(31) Priority Document No :2011060909
(32) Priority Date :18/03/2011
(33) Name of priority country :Japan
(86) International Application No :PCT/JP2012/056927
Filing Date :16/03/2012
(87) International Publication No :WO 2012/128228
(61) Patent of Addition to Application Number :NA
Filing Date :NA
(62) Divisional to Application Number :NA
Filing Date :NA

(71)**Name of Applicant :**
1)NIPPON STEEL & SUMITOMO METAL CORPORATION
Address of Applicant :6 1 Marunouchi 2 chome Chiyoda ku Tokyo 1008071 Japan
(72)**Name of Inventor :**
1)TAKAHASHI Yuzo
2)HAJI Junji
3)KAWANO Osamu

(57) Abstract :
A hot rolled steel sheet includes, as a chemical composition, at least one selected from Ti, REM, and Ca, and includes, as a metallographic structure, a ferrite as a primary 5 phase, at least one of a martensite and a residual austenite as a secondary phase, and plural inclusions, wherein a total length in the rolling direction of both inclusion-cluster whose length in the rolling direction is 30 um or more and independent-inclusion whose length in the rolling direction is 30 um or more is 0 mm to 0.25 mm per 1 mm .

No. of Pages : 123 No. of Claims : 9

(12) PATENT APPLICATION PUBLICATION
(19) INDIA
(22) Date of filing of Application :18/09/2013
(21) Application No.8164/DELNP/2013 A
(43) Publication Date : 19/12/2014

(54) Title of the invention : BIDIRECTIONAL DC DC CONVERTER

(51) International classification :H02M3/335,H02M3/337
(31) Priority Document No :11156405.0
(32) Priority Date :01/03/2011
(33) Name of priority country :EPO
(86) International Application No :PCT/EP2012/053265
Filing Date :27/02/2012
(87) International Publication No :WO 2012/116953
(61) Patent of Addition to Application Number :NA
Filing Date :NA
(62) Divisional to Application Number :NA
Filing Date :NA

(71)**Name of Applicant :**
1)RHEINISCH WESTF„LISCH TECHNISCHE HOCHSCHULE AACHEN
Address of Applicant :Templergraben 55 52056 Aachen Germany
(72)**Name of Inventor :**
1)THOMAS Stephan
2)DE DONCKER Rik W. A. A.
3)LENKE Robert

(57) Abstract :
The invention relates to a bidirectional DC DC converter for high voltages which is as simple and low loss as possible. The bidirectional DC DC converter (1) comprises an input stage (2) for converting a DC input voltage into a first AC voltage a transformer (3) for transforming the first AC voltage into a second AC voltage and an output stage (4) for converting the second AC voltage into a DC output voltage wherein at least one of the input stages (2) and/or output stages (4) comprises a branch of a multi level converter (5) comprising a first number of active first semiconductor switches (61) for supplying the first and/or second AC voltage(s).

No. of Pages : 28 No. of Claims : 15

(12) PATENT APPLICATION PUBLICATION
(19) INDIA
(22) Date of filing of Application :18/09/2013
(21) Application No.8165/DELNP/2013 A
(43) Publication Date : 19/12/2014

(54) Title of the invention : ELIMINATION OF HYDROGEN SULFIDE IN AQUEOUS AMMONIA

(51) International classification :C02F1/68,C01C1/02,C02F101/10
(31) Priority Document No :61/465041
(32) Priority Date :14/03/2011
(33) Name of priority country :U.S.A.
(86) International Application No :PCT/US2012/028936
Filing Date :13/03/2012
(87) International Publication No :WO 2012/125643
(61) Patent of Addition to Application Number :NA
Filing Date :NA
(62) Divisional to Application Number :NA
Filing Date :NA

(71)**Name of Applicant :**
1)THIOSOLV L.L.C.
Address of Applicant :ThioSolv LLC 410 Grand Oaks Blvd. Spring Branch Texas 78070 U.S.A.
(72)**Name of Inventor :**
1)ANDERSON Mark
2)RAY Michael

(57) Abstract :
Processes for selectively eliminating hydrogen sulfide from liquid ammonia either anhydrous or aqueous are described herein. The processes generally include contacting a first liquid stream anhydrous or aqueous comprising ammonia and hydrogen sulfide with a solution comprising sulfur dioxide to convert the hydrogen sulfide to thiosulfate.

No. of Pages : 13 No. of Claims : 13

(12) PATENT APPLICATION PUBLICATION
(19) INDIA
(22) Date of filing of Application :14/05/2013
(21) Application No.1439/DEL/2013 A
(43) Publication Date : 19/12/2014

(54) Title of the invention : AN IMPROVED EVAPORATIVE COOLING FAN

(51) International classification :F02M
(31) Priority Document No :NA
(32) Priority Date :NA
(33) Name of priority country :NA
(86) International Application No :NA
Filing Date :NA
(87) International Publication No : NA
(61) Patent of Addition to Application Number :NA
Filing Date :NA
(62) Divisional to Application Number :NA
Filing Date :NA

(71)**Name of Applicant :**
1)SISODIA ANKIT KUMAR
Address of Applicant :VILLAGE BAGIRPUR JAGIR, POST OFFICE, SEOHARA DISTT. BIJNOR, U.P. INDIA 246746 Uttar Pradesh India
(72)**Name of Inventor :**
1)SISODIA ANKIT KUMAR

(57) Abstract :
Provided are: An evaporative cooling fans which have liquid such as drinkable water and regular food items cooling facility, having Insulate or adiabatic body (13) connected with the evaporative cooling fan by a hollow open type big frustum (7); Hollow open type big frustum (7) is connected with the pump (5) by at least one pipe; Square plates (14) are arranged inside the insulated body (13) and connected with each other by means of said small vertical pipes (24); Upper plate is connected to an inlet valve (20) and bottom plate is connected to an outlet drain or valve (15);Drinkable water enters by an inlet valve (20) and out by an outlet valve (15); A storage box (21) is arranged inside the insulate body (13); Hollow open type big frustum (10) is connected with said insulate body (13); pump (8) and pump (5) operates by a temperature sensor circuit (16)

No. of Pages : 11 No. of Claims : 3

(12) PATENT APPLICATION PUBLICATION
(19) INDIA
(22) Date of filing of Application :27/05/2013
(21) Application No.1546/DEL/2013 A
(43) Publication Date : 19/12/2014

(54) Title of the invention : CYLINDER LOCK PROTECTIVE DEVICE

(51) International classification	:E015, B60K
(31) Priority Document No	:NA
(32) Priority Date	:NA
(33) Name of priority country	:NA
(86) International Application No	:NA
Filing Date	:NA
(87) International Publication No	: NA
(61) Patent of Addition to Application Number	:NA
Filing Date	:NA
(62) Divisional to Application Number	:NA
Filing Date	:NA

(71)**Name of Applicant :**
1)MINDA CORPORATION LIMITED
Address of Applicant :D 6-11, SECTOR 59, NOIDA, UTTAR PRADESH, INDIA
(72)**Name of Inventor :**
1)DEEPAK GOSWAMI
2)DIWAKAR VARSHNEY
3)SUMEET VERMA
4)VIKRAM PURI

(57) Abstract :
The present invention relates to a protective device for cylinder lock in vehicles. The protective device for cylinder lock in vehicle comprises a mounting body (300) and a cap, the cap is co-axially mounted on the mounting body (300) and rotatable, the said cap (100) consisting a centrally placed magnet key receiving recess (102) and a key insertion hole (101), the said key insertion hole (101) of cap is aligned with the key insertion hole (401) of the cylinder lock, a shutter (200) being adapted between the said mounting body (300) and the cap (100) and being pivotally mounted on a pivot (302) on the mounting body (300) and at the same time the said shutter operationally configured with either inner peripheral side of the cap or top inner surface of the cap, up to predetermined length, so as to achieve tandem motion between the cap and shutter to either uncover or cover the key insertion hole (401) of cylinder lock while rotating the cap.

No. of Pages : 29 No. of Claims : 10

(12) PATENT APPLICATION PUBLICATION
(19) INDIA
(22) Date of filing of Application :28/05/2013
(21) Application No.1604/DEL/2013 A
(43) Publication Date : 19/12/2014

(54) Title of the invention : IMPROVED ELECTRICAL WIRING BOX ASSEMBLY

(51) International classification :H02G
(31) Priority Document No :NA
(32) Priority Date :NA
(33) Name of priority country :NA
(86) International Application No :NA
Filing Date :NA
(87) International Publication No : NA
(61) Patent of Addition to Application Number :NA
Filing Date :NA
(62) Divisional to Application Number :NA
Filing Date :NA

(71)**Name of Applicant :**
1)KAZATE SWITCHGEAR PVT. LTD.
Address of Applicant :PLOT NO. 453, EAST CHAWLA COLONY BALLABGARH FARIDABAD-121004 HARYANAN India
(72)**Name of Inventor :**
1)MOHTA, SHARAD
2)DALAL LAKSHMAN

(57) Abstract :
An improved electrical wiring box is provided. In various embodiments of the present invention, the electrical wiring box has improved configurations for mounting inside the recess of the wall and providing an adjustable system for fixing of top plate over the wiring box utilizing a sliding arrangement comprising of a rail type flange, a support bar, a plastic insert with a metal nut moulded inside the plastic insert. Due to adjustable top plate mounting system, wiring box does not require to be broken out of the cemented wall or reinstalled in case the box has not been installed at a right angle. Ths prevents leaving any gap or having a slanted top plate which could be a fire and shock hazard.

No. of Pages : 15 No. of Claims : 4

(12) PATENT APPLICATION PUBLICATION
(19) INDIA
(22) Date of filing of Application :18/09/2013
(21) Application No.8170/DELNP/2013 A
(43) Publication Date : 19/12/2014

(54) Title of the invention : SURGICAL ROBOT SYSTEM FOR PERFORMING SURGERY BASED ON DISPLACEMENT INFORMATION DETERMINED BY THE SPECIFICATION OF THE USER AND METHOD FOR CONTROLLING SAME

(51) International classification :A61B19/00,B25J9/02,B25J13/08
(31) Priority Document No :1020110015251
(32) Priority Date :21/02/2011
(33) Name of priority country :Republic of Korea
(86) International Application No :PCT/KR2012/000767
Filing Date :31/01/2012
(87) International Publication No :WO 2012/115360
(61) Patent of Addition to Application Number :NA
Filing Date :NA
(62) Divisional to Application Number :NA
Filing Date :NA

(71)**Name of Applicant :**
1)RIMSCIENCE CO. LTD.
Address of Applicant :2nd floor Sangdo dong 477 11 Dongjak gu Seoul 156 881 Republic of Korea
(72)**Name of Inventor :**
1)YOON Sang Jin

(57) Abstract :
There is provided a surgical robot system comprising a robot, a control system and a user control device, wherein the robot comprises an endoscope and at least one surgical instrument; the user control device comprises a display means by which a user nay make an indication on an i:\tevnaj body part; and the control system comprises a displacer-en:. information processing unit and a surgical inst rune-: r control unit.

No. of Pages : 31 No. of Claims : 25

(12) PATENT APPLICATION PUBLICATION
(19) INDIA
(22) Date of filing of Application :09/09/2013
(21) Application No.7916/DELNP/2013 A
(43) Publication Date : 19/12/2014

(54) Title of the invention : SYSTEM AND METHOD FOR STORING ENERGY IN THE FORM OF METHANE

(51) International classification :C12P5/02,C25B1/04,C12M1/107
(31) Priority Document No :11154897.0
(32) Priority Date :17/02/2011
(33) Name of priority country :EPO
(86) International Application No :PCT/EP2012/000726
Filing Date :17/02/2012
(87) International Publication No :WO 2012/110257
(61) Patent of Addition to Application Number :NA
Filing Date :NA
(62) Divisional to Application Number :NA
Filing Date :NA

(71)**Name of Applicant :**
1)KRAJETE GMBH
Address of Applicant :Scharitzerstr. 30 A 4020 Linz Austria
(72)**Name of Inventor :**
1)KRAJETE Alexander

(57) Abstract :
The present invention provides a method and system for storing energy in the form of methane. The method comprises at least a step of generating electric energy from a renewable and/or non renewable energy source a step of using at least partially the electric energy generated from a renewable and/or non renewable energy source for the electrolysis of water and/or brine thereby producing hydrogen and/or oxygen and a step of using at least partially the hydrogen produced by electrolysis of water and/or brine and carbon dioxide for producing methane by methanogenic micro organisms in a reaction vessel this step comprises contacting the methanogenic microorganisms with an in gas feed comprising at least said hydrogen and carbon dioxide. The invention further provides a system for storing energy in the form of methane comprising at least one device for generating electric energy from a renewable and/or non renewable energy source at least one device for producing hydrogen and oxygen by the electrolysis of water and/or brine and at least one bioreactor comprising a reaction vessel suitable for growing fermenting and/or culturing methanogenic microorganisms. Also provided is said bioreactor.

No. of Pages : 99 No. of Claims : 15

(12) PATENT APPLICATION PUBLICATION
(19) INDIA
(22) Date of filing of Application :13/09/2013
(21) Application No.8048/DELNP/2013 A
(43) Publication Date : 19/12/2014

(54) Title of the invention : CONFIGURABLE ELECTRICAL CONNECTOR

(51) International classification :H01R12/70,H01R13/74
(31) Priority Document No :1152640
(32) Priority Date :30/03/2011
(33) Name of priority country :France
(86) International Application No :PCT/EP2012/055429
Filing Date :27/03/2012
(87) International Publication No :WO 2012/130852
(61) Patent of Addition to Application Number :NA
Filing Date :NA
(62) Divisional to Application Number :NA
Filing Date :NA

(71)**Name of Applicant :**
1)TYCO ELECTRONICS FRANCE SAS
Address of Applicant :29 Chausse Jules Csar F 95300 Pontoise France
(72)**Name of Inventor :**
1)GALLERAND Stphane

(57) Abstract :
The present invention relates to a configurable electrical connector (1100) to a lock (1200) and to a configured electrical connector (1300). More specifically it relates to an electrical connector (1300) which can be configured so as to be mounted by means of at least one lock (1200) on a mounting target in more than one position.

No. of Pages : 25 No. of Claims : 13

(12) PATENT APPLICATION PUBLICATION
(19) INDIA
(22) Date of filing of Application :13/09/2013
(21) Application No.8049/DELNP/2013 A
(43) Publication Date : 19/12/2014

(54) Title of the invention : BALL AND SOCKET IMPLANT

(51) International classification :A61F2/34,A61F2/30
(31) Priority Document No :11159050.1
(32) Priority Date :21/03/2011
(33) Name of priority country :EPO
(86) International Application No :PCT/EP2012/054991
Filing Date :21/03/2012
(87) International Publication No :WO 2012/126944
(61) Patent of Addition to Application Number :NA
Filing Date :NA
(62) Divisional to Application Number :NA
Filing Date :NA

(71)**Name of Applicant :**
1)JOSSI HOLDING AG
Address of Applicant :Alte Landstrasse CH 8546 Islikon Switzerland
(72)**Name of Inventor :**
1)GUGLER Christian
2)SCHMIDT Martin
3)MEYENHOFER Andreas

(57) Abstract :
The invention relates to a ball and socket implant (1) in particular an acetabular implant preferably in the shape of a spherical cup shell said implant having at least one region with a surface structure (2 7). The at least one region extends between the equator and the pole of the spherical cup shell. The surface structure comprises a plurality of structural elements (6) each of which is formed by a plurality of intersecting ridges (3 8) with opposite inclinations. The number of structural elements (6) on the equator (5) or on a circle of latitude near the equator is the same as on a circle of latitude near the pole. The ridges (3 8) have a curvature such that the inclination of the ridges with respect to the circles of latitude and thus an angle between a tangent of the ridge curvature and a circle of latitude continuously increases from the equator (5) to the pole (4).

No. of Pages : 32 No. of Claims : 15

(12) PATENT APPLICATION PUBLICATION
(19) INDIA
(22) Date of filing of Application :18/09/2013
(21) Application No.8188/DELNP/2013 A
(43) Publication Date : 19/12/2014

(54) Title of the invention : PROCESS FOR PRODUCING ARIPIPRAZOLE IN ANHYDROUS TYPE I CRYSTALS

(51) International classification :C07D215/227
(31) Priority Document No :904/DEL/2011
(32) Priority Date :30/03/2011
(33) Name of priority country :India
(86) International Application No :PCT/IB2012/000403
Filing Date :05/03/2012
(87) International Publication No :WO 2012/131451
(61) Patent of Addition to Application Number :NA
Filing Date :NA
(62) Divisional to Application Number :NA
Filing Date :NA

(71)**Name of Applicant :**
1)JUBILANT LIFE SCIENCES LIMITED
Address of Applicant :Plot 1A Sector 16 A Noida 201301 Uttar Pradesh India
(72)**Name of Inventor :**
1)GUPTA Vijay Shankar
2)KUMAR Pramod
3)VIR Dharam

(57) Abstract :
Disclosed herein is an improved process for the preparation of anpiprazole in anhydrous Type I crystals substantially free of other polymorphic forms of aripiprazole improved drying technique.

No. of Pages : 11 No. of Claims : 9

(12) PATENT APPLICATION PUBLICATION
(19) INDIA
(22) Date of filing of Application :19/09/2013
(21) Application No.8189/DELNP/2013 A
(43) Publication Date : 19/12/2014

(54) Title of the invention : BATTERY PACK AND ELECTRIC BICYCLE

(51) International classification :H01M2/10,B62M6/90,H01M2/20
(31) Priority Document No :2011078296
(32) Priority Date :31/03/2011
(33) Name of priority country :Japan
(86) International Application No :PCT/JP2011/005028
Filing Date :07/09/2011
(87) International Publication No :WO 2012/131798
(61) Patent of Addition to Application Number :NA
Filing Date :NA
(62) Divisional to Application Number :NA
Filing Date :NA

(71)**Name of Applicant :**
1)NEC Energy Devices Ltd.
Address of Applicant :1120 Shimokuzawa Chuo ku Sagamihara shi Kanagawa 2525298 Japan
(72)**Name of Inventor :**
1)SUZUKI Toru

(57) Abstract :
There is provided a battery pack having excellent 5 vibration-resistant impact-resistant, and battery temperature characteristics. The battery pack includes a battery protective member having a first plate section 420 and a second plate section 440 which is integrally connected to both edge portions of a width direction of the first 10 plate section 420 and extends substantially in a direction perpendicular to both surfaces of the first plate section 420, wherein flat batteries are placed on the first plate section 420.

No. of Pages : 71 No. of Claims : 35

(12) PATENT APPLICATION PUBLICATION
(19) INDIA
(22) Date of filing of Application :23/07/2013
(21) Application No.6568/DELNP/2013 A
(43) Publication Date : 19/12/2014

(54) Title of the invention : IMPROVEMENTS IN AND RELATING TO COMPOSITIONS

(51) International classification :A61K9/08,A61K9/00
(31) Priority Document No :1101666.4
(32) Priority Date :31/01/2011
(33) Name of priority country :U.K.
(86) International Application No :PCT/GB2012/050195
Filing Date :31/01/2012
(87) International Publication No :WO 2012/104617
(61) Patent of Addition to Application Number :NA
Filing Date :NA
(62) Divisional to Application Number :NA
Filing Date :NA

(71)**Name of Applicant :**
1)NORGINE BV
Address of Applicant :Hogehilweg 7 NL 1101 CA Amsterdam Zuid Oost Netherlands
(72)**Name of Inventor :**
1)SELDON Chris
2)PADFIELD Dawn
3)MORRISSEY Frances

(57) Abstract :
The present invention concerns aqueous solutions comprising polyethylene glycol for use as a medicament particularly in the treatment of constipation and faecal impaction. The solutions may be preserved to suppress the growth of microbial organisms. Kits comprising a preserved aqueous solution and a separate tablet or capsule comprising electrolytes are also provided.

No. of Pages : 44 No. of Claims : 27

(12) PATENT APPLICATION PUBLICATION
(19) INDIA
(22) Date of filing of Application :13/09/2013
(21) Application No.8059/DELNP/2013 A
(43) Publication Date : 19/12/2014

(54) Title of the invention : HIGH PRESSURE FUEL PUMP HAVING AN AXIAL BEARING ON THE CAMSHAFT

(51) International classification	:F02M59/10,F04B1/04,F02M59/44
(31) Priority Document No	:10 2011 017 493.1
(32) Priority Date	:21/04/2011
(33) Name of priority country	:Germany
(86) International Application No	:PCT/EP2012/055297
Filing Date	:26/03/2012
(87) International Publication No	:WO 2012/143209
(61) Patent of Addition to Application Number	:NA
Filing Date	:NA
(62) Divisional to Application Number	:NA
Filing Date	:NA

(71)**Name of Applicant :**
1)ROBERT BOSCH GMBH
Address of Applicant :Postfach 30 02 20 70442 Stuttgart Germany
(72)**Name of Inventor :**
1)DUTT Andreas
2)GREINER Matthias

(57) Abstract :
The invention relates to a high pressure pump (1) for a fuel injection device of an internal combustion engine which has a power unit (25) arranged in a housing (2) having a drive shaft (3) having at least one cam (4) and mounted via an axial bearing in the housing (2) and a plunger assembly (22) and at least one pump piston (7) which is driven by the rotation of the drive shaft (3) around a rotation axis (21) via the at least one cam (4) arranged on the drive shaft (3) and the plunger assembly (22) arranged on the at least one pump piston (7) in a stroke movement in a substantially radial direction to the rotation axis (21) of the drive shaft (3) wherein the axial bearing is designed as an axial slide bearing (27 27).

No. of Pages : 14 No. of Claims : 10

(12) PATENT APPLICATION PUBLICATION
(19) INDIA
(22) Date of filing of Application :13/09/2013
(21) Application No.8060/DELNP/2013 A
(43) Publication Date : 19/12/2014

(54) Title of the invention : METHODS OF MANUFACTURING WIRE WIRE PRE PRODUCTS AND WIRES

(51) International classification :H01B13/14
(31) Priority Document No :13/085929
(32) Priority Date :13/04/2011
(33) Name of priority country :U.S.A.
(86) International Application No :PCT/US2012/032017
Filing Date :03/04/2012
(87) International Publication No :WO 2012/141944
(61) Patent of Addition to Application Number :NA
Filing Date :NA
(62) Divisional to Application Number :NA
Filing Date :NA

(71)**Name of Applicant :**
1)PRESTOLITE WIRE LLC
Address of Applicant :200 Galleria Officentre Suite 212 Southfield MI 48034 U.S.A.
(72)**Name of Inventor :**
1)KELLEY Frederick J.

(57) Abstract :
Exemplary methods for manufacturing a wire and resultant wires are disclosed herein. The method includes extruding a cross linkable polymer that is substantially free of curing agent about a conductive core then adding a curing agent to the extruded wire pre product then heat curing the extruded wire pre product.

No. of Pages : 22 No. of Claims : 20

(12) PATENT APPLICATION PUBLICATION
(19) INDIA
(22) Date of filing of Application :13/09/2013
(21) Application No.8061/DELNP/2013 A
(43) Publication Date : 19/12/2014

(54) Title of the invention : METHODS OF MANUFACTURING WIRE MULTI LAYER WIRE PRE PRODUCTS AND WIRES

(51) International classification :H01B7/00,H01B13/14
(31) Priority Document No :13/085253
(32) Priority Date :12/04/2011
(33) Name of priority country :U.S.A.
(86) International Application No :PCT/US2012/031995
Filing Date :03/04/2012
(87) International Publication No :WO 2012/173685
(61) Patent of Addition to Application Number :NA
Filing Date :NA
(62) Divisional to Application Number :NA
Filing Date :NA

(71)**Name of Applicant :**
1)PRESTOLITE WIRE LLC
Address of Applicant :200 Galleria Officentre Suite 212 Southfield MI 48034 U.S.A.
(72)**Name of Inventor :**
1)KELLEY Frederick J.

(57) Abstract :
Exemplary methods for manufacturing a wire and resultant wires are disclosed herein. The method includes extruding a receptor cross linkable polymer that is substantially free of curing agent about a conductive core and extruding a donor polymer in association with a curing agent. The method includes disposing the donor polymer about the receptor polymer and conductive core to create a multi layer wire pre product. The method also includes heat curing a multi layer wire pre product to form a wire.

No. of Pages : 27 No. of Claims : 20

(12) PATENT APPLICATION PUBLICATION
(19) INDIA
(22) Date of filing of Application :19/09/2013
(21) Application No.8193/DELNP/2013 A
(43) Publication Date : 19/12/2014

(54) Title of the invention : POLICY DESCRIPTION ASSISTANCE SYSTEM AND POLICY DESCRIPTION ASSISTANCE METHOD

(51) International classification :G06F11/30
(31) Priority Document No :2011095703
(32) Priority Date :22/04/2011
(33) Name of priority country :Japan
(86) International Application No :PCT/JP2012/053539
Filing Date :15/02/2012
(87) International Publication No :WO 2012/144257
(61) Patent of Addition to Application Number :NA
Filing Date :NA
(62) Divisional to Application Number :NA
Filing Date :NA

(71)**Name of Applicant :**
1)NEC Corporation
Address of Applicant :7 1 Shiba 5 chome Minato ku Tokyo 1088001 Japan
(72)**Name of Inventor :**
1)TOMIZAWA Nobuyuki

(57) Abstract :
An object of the present invention is to assist in describing policies so that errors when describing policies are reduced. The present invention includes: referring to a parameter information storage unit that stores a plurality of parameters 5 for a monitoring target system, and displaying the plurality of parameters on a screen of a display device; referring to a policy information storage unit that stores a plurality of policies in which a condition including at least one parameter of the plurality of parameters and a process executed when the condition is satisfied are described, displaying the plurality of policies on the screen, and adding or modifying a policy in 10 the policy information storage unit according to a user input; dynamically determining association between the plurality of parameters stored in the parameter information storage unit and the plurality of policies stored in the policy information storage unit; and displaying the association between the plurality of parameters and the plurality of policies on the screen in an identifiable manner based on the determination results.

No. of Pages : 24 No. of Claims : 6

(12) PATENT APPLICATION PUBLICATION
(19) INDIA
(22) Date of filing of Application :13/09/2013
(21) Application No.8069/DELNP/2013 A
(43) Publication Date : 19/12/2014

(54) Title of the invention : COMPOSITIONS OF INSULIN AND CHROMIUM FOR THE TREATMENT AND PREVENTION OF DIABETES HYPOGLYCEMIA AND RELATED DISORDERS

(51) International classification	:A61K33/24,A61K38/28,A61P3/10
(31) Priority Document No	:61/448134
(32) Priority Date	:01/03/2011
(33) Name of priority country	:U.S.A.
(86) International Application No	:PCT/US2012/027342
Filing Date	:01/03/2012
(87) International Publication No	:WO 2012/119007
(61) Patent of Addition to Application Number	:NA
Filing Date	:NA
(62) Divisional to Application Number	:NA
Filing Date	:NA

(71)**Name of Applicant :**
1)JDS THERAPEUTICS LLC
Address of Applicant :3 Manhattanville Road Suite 201 Purchase NY 10577 U.S.A.
(72)**Name of Inventor :**
1)KOMOROWSKI James R.

(57) Abstract :
A composition comprising chromium and insulin and/or a chromium insulin complex its method of preparation and its use in the prevention and treatment of hypoglycemia and hypoglycemia related conditions. This composition can be administered in numerous ways including parenterally intranasally and orally. The composition stabilizes serum glucose levels and has a synergistic effect compared to chromium and insulin administered separately.

No. of Pages : 75 No. of Claims : 47

(12) PATENT APPLICATION PUBLICATION
(19) INDIA
(22) Date of filing of Application :13/09/2013
(21) Application No.8070/DELNP/2013 A
(43) Publication Date : 19/12/2014

(54) Title of the invention : COOLING SYSTEM

(51) International classification :F01P9/02,B60H1/00
(31) Priority Document No :2011057587
(32) Priority Date :16/03/2011
(33) Name of priority country :Japan
(86) International Application No :PCT/IB2012/000515
Filing Date :16/03/2012
(87) International Publication No :WO 2012/123812
(61) Patent of Addition to Application Number :NA
Filing Date :NA
(62) Divisional to Application Number :NA
Filing Date :NA

(71)**Name of Applicant :**
1)TOYOTA JIDOSHA KABUSHIKI KAISHA
Address of Applicant :1 Toyota cho Toyota shi Aichi ken 471 8571 Japan
2)NIPPON SOKEN INC.
(72)**Name of Inventor :**
1)UCHIDA Kazuhide
2)OHNO Yuichi
3)KAWAKAMI Yoshiaki
4)JOJIMA Yuki
5)TAKAHASHI Eizo
6)SATO Kousuke

(57) Abstract :
A cooling system (1) that cools HV equipment (31) includes a compressor (12) that circulates refrigerant a condenser (14) that condenses the refrigerant a gas liquid separator (40) that stores the refrigerant in liquid form that is condensed by the condenser (14) an expansion valve (16) that reduces a pressure of the refrigerant an evaporator (18) that vaporizes the refrigerant that is reduced in pressure by the expansion valve (16) a first passage (23) and a second passage (34 36 32) through which the refrigerant flows from the gas liquid separator (40) toward the expansion valve (16) and that are provided in parallel and a cooling portion (30) that is provided along the second passage and cools the heat source (31) using the refrigerant. The refrigerant in liquid form flows from the gas liquid separator (40) through the second passage.

No. of Pages : 36 No. of Claims : 11

(12) PATENT APPLICATION PUBLICATION
(19) INDIA
(22) Date of filing of Application :13/09/2013
(21) Application No.8071/DELNP/2013 A
(43) Publication Date : 19/12/2014

(54) Title of the invention : AN INTRA VAGINAL DEVICE TO AID IN TRAINING AND DETERMINING MUSCLE STRENGTH

(51) International classification :A63B23/20,A61B5/04
(31) Priority Document No :2011901469
(32) Priority Date :19/04/2011
(33) Name of priority country :Australia
(86) International Application No :PCT/AU2012/000012
Filing Date :09/01/2012
(87) International Publication No :WO 2012/142646
(61) Patent of Addition to Application Number :NA
Filing Date :NA
(62) Divisional to Application Number :NA
Filing Date :NA

(71)**Name of Applicant :**
1)ANALYTICA LIMITED
Address of Applicant :Level 1 85 Brandl Street Brisbane Technology Park Eight Mile Plains QLD 4113 Australia
(72)**Name of Inventor :**
1)DALY Geoffrey Daniel
2)CORNELIUS Chelsea

(57) Abstract :
An intra vaginal device (10) including an elongated hollow body (1 1) with side wall portions (15 16 and 24). Secured to each wall portion (15 and 24) is a sensor (19) while secured to the wall portion (16) is a sensor (20). The sensors (19) simply measure forces directly applied by the bi lateral contraction of the pubococcygeus while the sensor (20) provides an indication of the puborectalis contraction forces.

No. of Pages : 11 No. of Claims : 11

(12) PATENT APPLICATION PUBLICATION
(19) INDIA
(22) Date of filing of Application :13/09/2013
(21) Application No.8072/DELNP/2013 A
(43) Publication Date : 19/12/2014

(54) Title of the invention : METHOD AND SYSTEM FOR DYNAMICALLY TAGGING METRICS DATA

(51) International classification :G06F11/34,G06F9/40
(31) Priority Document No :13/053143
(32) Priority Date :21/03/2011
(33) Name of priority country :U.S.A.
(86) International Application No :PCT/US2012/029701
Filing Date :19/03/2012
(87) International Publication No :WO 2012/129181
(61) Patent of Addition to Application Number :NA
Filing Date :NA
(62) Divisional to Application Number :NA
Filing Date :NA

(71)**Name of Applicant :**
1)AMAZON TECHNOLOGIES INC.
Address of Applicant :P.O. Box 8102 Reno NV 89507 U.S.A.
(72)**Name of Inventor :**
1)THEIMER Marvin M.
2)BRANDWINE Eric J.
3)BROWN David
4)BROOKER Marc J.
5)FULLER Erik J.

(57) Abstract :
Systems and methods are described for dynamically tagging metrics data by a provider of computing resources. A requesting user or application can request the provider of computing resources to tag the metrics based on configurations and/or settings specified by the requesting user or application. The tagged metrics data can then be processed by a processing user or application at a later time.

No. of Pages : 35 No. of Claims : 15

(12) PATENT APPLICATION PUBLICATION
(19) INDIA
(22) Date of filing of Application :19/09/2013
(21) Application No.8213/DELNP/2013 A
(43) Publication Date : 19/12/2014

(54) Title of the invention : METHOD FOR DEFORMING A WEB

(51) International classification :A61F13/15
(31) Priority Document No :13/094206
(32) Priority Date :26/04/2011
(33) Name of priority country :U.S.A.
(86) International Application No :PCT/US2012/034850
Filing Date :25/04/2012
(87) International Publication No :WO 2012/148935
(61) Patent of Addition to Application Number :NA
Filing Date :NA
(62) Divisional to Application Number :NA
Filing Date :NA

(71)**Name of Applicant :**
1)THE PROCTER & GAMBLE COMPANY
Address of Applicant :One Procter & Gamble Plaza Cincinnati Ohio 45202 U.S.A.
(72)**Name of Inventor :**
1)ORR Jill Marlene
2)LAKE Kirk Wallace
3)CURRO John Joseph
4)STRUBE John Brian
5)MULLANE Timothy Ian
6)STONE Keith Joseph

(57) Abstract :
Methods for forming discrete deformations in web materials are disclosed. In some embodiments the method involves feeding a web into an apparatus having nips that are formed between intermeshing rolls. The apparatus may be in the form of nested or other arrangements of multiple rolls in which the web is maintained in substantial contact with at least one of the rolls throughout the process and at least two of the rolls define two or more nips thereon with other rolls. In some embodiments rolls can be used to expose a different side of the web for a subsequent deformation step. In these or other embodiments the rolls can be used to transfer the web between rolls in such a manner that it may offset the rolls and/or web so that subsequent deformations are formed at a different cross machine direction location than prior deformations.

No. of Pages : 69 No. of Claims : 15

(12) PATENT APPLICATION PUBLICATION
(19) INDIA
(22) Date of filing of Application :16/09/2013
(21) Application No.8076/DELNP/2013 A
(43) Publication Date : 19/12/2014

(54) Title of the invention : ANCHOR SYSTEM AND DELIVERY DEVICE FOR USE THEREWITH

(51) International classification :A61B17/04
(31) Priority Document No :61/466069
(32) Priority Date :22/03/2011
(33) Name of priority country :U.S.A.
(86) International Application No :PCT/US2012/030095
Filing Date :22/03/2012
(87) International Publication No :WO 2012/129388
(61) Patent of Addition to Application Number :NA
Filing Date :NA
(62) Divisional to Application Number :NA
Filing Date :NA

(71)**Name of Applicant :**
1)SMITH & NEPHEW INC.
Address of Applicant :1450 Brooks Road Memphis TN 38116 U.S.A.
(72)**Name of Inventor :**
1)PAULK David
2)LUNN Richard

(57) Abstract :
The present disclosure relates to an anchor system. The anchor system includes an anchor including a threaded outer portion and a non threaded outer portion and a plug disposed within the anchor the plug comprising a distal portion a proximal portion the proximal portion comprising a threaded portion and a coupling portion and a through hole wherein m inner surface of the threaded outer portion is shaped to interface with a portion of a delivery device and an inner surface of Che non threaded outer portion includes threads for engagement with threads on the threaded portion of the plug A delivery device for use with the anchor system is also disclosed.

No. of Pages : 16 No. of Claims : 6

(12) PATENT APPLICATION PUBLICATION
(19) INDIA
(22) Date of filing of Application :16/09/2013
(21) Application No.8077/DELNP/2013 A
(43) Publication Date : 19/12/2014

(54) Title of the invention : COMPOUND ANGLE IMPLANT

(51) International classification :A61F2/40,A61F2/30
(31) Priority Document No :61/453328
(32) Priority Date :16/03/2011
(33) Name of priority country :U.S.A.
(86) International Application No :PCT/US2012/029180
Filing Date :15/03/2012
(87) International Publication No :WO 2012/125795
(61) Patent of Addition to Application Number :NA
Filing Date :NA
(62) Divisional to Application Number :NA
Filing Date :NA

(71)**Name of Applicant :**
1)SMITH & NEPHEW INC.
Address of Applicant :1450 Brooks Road Memphis Tennessee 38116 U.S.A.
(72)**Name of Inventor :**
1)BONIN Henry Keith Jr.
2)CHREENE David Edward
3)SEIDL Alexander Iwan
4)MATHIEU Claude
5)ZIMMERMAN Daniel
6)MENDOZA Francis X.

(57) Abstract :
A method of aligning implant components includes placing a first implant component in bone followed by: coupling a first intermediate member to the first implant component; coupling a first alignment member to the first intermediate member; rotating the members as a unit to place the first intermediate member in an alignment position; removing the first alignment member from the first intermediate member; coupling a second alignment member to a second intermediate member; coupling the second intermediate member to the first intermediate member and rotating the second alignment member and the second intermediate member as a unit relative to the first intermediate member to provide a desired orientation of the second intermediate member. An alignment system for aligning first and second members includes a first alignment member having an offset channel dimensioned to receive the first member and a second alignment member having a channel dimensioned to receive the second member.

No. of Pages : 62 No. of Claims : 27

(12) PATENT APPLICATION PUBLICATION
(19) INDIA
(22) Date of filing of Application :16/09/2013
(21) Application No.8078/DELNP/2013 A
(43) Publication Date : 19/12/2014

(54) Title of the invention : MULTIPLE PORTAL GUIDE

(51) International classification :A61B17/17
(31) Priority Document No :61/450666
(32) Priority Date :09/03/2011
(33) Name of priority country :U.S.A.
(86) International Application No :PCT/US2012/028537
Filing Date :09/03/2012
(87) International Publication No :WO 2012/122497
(61) Patent of Addition to Application Number :NA
Filing Date :NA
(62) Divisional to Application Number :NA
Filing Date :NA

(71)**Name of Applicant :**
1)SMITH & NEPHEW INC.
Address of Applicant :1450 Brooks Road Memphis Tennessee 38116 U.S.A.
(72)**Name of Inventor :**
1)TORRIE Paul Alexander
2)BHARAM Srino

(57) Abstract :
A guide assembly includes a guide having a first attachment portion and a second attachment portion an aimer arm coupled to the first attachment portion of the guide and having a distal portion configured to engage a bone surface a surgical instrument coupled to the second attachment portion of the guide and defining a longitudinal axis that is substantially co radial with the distal portion of the aimer arm and one or more depth limiting elements configured to limit movement of a distal end of the surgical instrument beyond a preset location along the longitudinal axis. The distal portion of the aimer arm has an aiming feature configured to contact a bone surface. A portion of the aimer arm extends beyond the longitudinal axis of the surgical instrument. In use a clamping force is generated between the distal portion of the aimer arm and the distal end of the surgical instrument.

No. of Pages : 35 No. of Claims : 15

(12) PATENT APPLICATION PUBLICATION
(19) INDIA
(22) Date of filing of Application :19/09/2013
(21) Application No.8216/DELNP/2013 A
(43) Publication Date : 19/12/2014

(54) Title of the invention : A MOULDED MULTILAYER LINING FOR HEAT AND SOUND INSULATION

(51) International classification :D04H13/00,B32B5/18,B32B5/26
(31) Priority Document No :11159401.6
(32) Priority Date :23/03/2011
(33) Name of priority country :EPO
(86) International Application No :PCT/EP2012/054279
Filing Date :12/03/2012
(87) International Publication No :WO 2012/126763
(61) Patent of Addition to Application Number :NA
Filing Date :NA
(62) Divisional to Application Number :NA
Filing Date :NA

(71)**Name of Applicant :**
1)AUTONEUM MANAGEMENT AG
Address of Applicant :Schlosstalstrasse 43 CH 8406 Winterthur Switzerland
(72)**Name of Inventor :**
1)BRGIN Thomas
2)DANIERE Pierre
3)GODANO Philippe
4)K–NIGBAUER Stefan
5)KRAUSE Wenzel

(57) Abstract :
A pressurised steam moulded multilayer lining for heat and sound insulation comprising a first layer forming a reinforcement layer made of a blended web of polyamide matrix material in the form of powder or fibres or flakes and reinforcement fibres and at least a second layer chosen from an open cell foam layer or a heat reflecting layer or a second reinforcement layer made of a blended web of polyamide matrix material in the form of powder or fibres or flakes and reinforcement fibres and whereby due to the pressurized steam moulding all layers are laminated together and all available blended webs are consolidated to form porous reinforcement layers

No. of Pages : 27 No. of Claims : 19

(12) PATENT APPLICATION PUBLICATION
(19) INDIA
(22) Date of filing of Application :16/09/2013
(21) Application No.8080/DELNP/2013 A
(43) Publication Date : 19/12/2014

(54) Title of the invention : FOCAL PHOTODYNAMIC THERAPY METHODS

(51) International classification :A61N5/06
(31) Priority Document No :61/451939
(32) Priority Date :11/03/2011
(33) Name of priority country :U.S.A.
(86) International Application No :PCT/EP2012/054060
Filing Date :09/03/2012
(87) International Publication No :WO 2012/123343
(61) Patent of Addition to Application Number :NA
Filing Date :NA
(62) Divisional to Application Number :NA
Filing Date :NA

(71)**Name of Applicant :**
1)STEBA MAOR SA
Address of Applicant :7 Place du Thtre L 2613 Luxembourg Luxembourg
(72)**Name of Inventor :**
1)CHARBIT Suzy
2)GAILLAC Bertrand
3)ABENHAIM Lucien

(57) Abstract :
Improved methods of treating prostate cancer by vascular targeted photodynamic therapy and improved methods of planning treatment are presented using a light density index to plan and guide effective treatment.

No. of Pages : 24 No. of Claims : 44

(12) PATENT APPLICATION PUBLICATION
(19) INDIA
(22) Date of filing of Application :16/09/2013
(21) Application No.8081/DELNP/2013 A
(43) Publication Date : 19/12/2014

(54) Title of the invention : REFRACTORY ELEMENT ASSEMBLY AND TUNDISH FOR TRANSFERRING MOLTEN METAL

(51) International classification :B22D41/58
(31) Priority Document No :61/481136
(32) Priority Date :29/04/2011
(33) Name of priority country :U.S.A.
(86) International Application No :PCT/US2012/026856
Filing Date :28/02/2012
(87) International Publication No :WO 2012/148560
(61) Patent of Addition to Application Number :NA
Filing Date :NA
(62) Divisional to Application Number :NA
Filing Date :NA

(71)**Name of Applicant :**
1)VESUVIUS CRUCIBLE COMPANY
Address of Applicant :Suite 202 103 Foulk Road Wilmington Delaware 19803 U.S.A.
(72)**Name of Inventor :**
1)JANSSEN Dominique
2)GUILLO Philippe
3)SIMOES Jose

(57) Abstract :
A refractory element is configured to prevent or limit steel reoxidation in a steel casting process. The refractory element contains a base surrounded by a periphery in a specified geometrical arrangement. The refractory element is constituted of a base surrounded by a periphery in a specified geometrical arrangement.

No. of Pages : 45 No. of Claims : 28

(12) PATENT APPLICATION PUBLICATION
(19) INDIA
(22) Date of filing of Application :16/09/2013
(21) Application No.8082/DELNP/2013 A
(43) Publication Date : 19/12/2014

(54) Title of the invention : FOOLPROOF NOZZLE EXCHANGE DEVICE AND NOZZLE UNIT

(51) International classification :B22D41/56
(31) Priority Document No :11166213.6
(32) Priority Date :16/05/2011
(33) Name of priority country :EPO
(86) International Application No :PCT/EP2012/002071
Filing Date :15/05/2012
(87) International Publication No :WO 2012/156073
(61) Patent of Addition to Application Number :NA
Filing Date :NA
(62) Divisional to Application Number :NA
Filing Date :NA

(71)**Name of Applicant :**
1)VESUVIUS GROUP S.A.
Address of Applicant :17 rue de Douvrain B 7011 Ghlin Belgium
(72)**Name of Inventor :**
1)TABURIAUX Stphane

(57) Abstract :
The present invention concerns a nozzle unit (1) for use in a nozzle exchange device (100) in a continuous metal casting apparatus said nozzle exchange device (100) being of the type comprising a loading opening and guiding means (7) for sliding the nozzle unit through said opening into casting position with respect to the nozzle exchange device wherein said nozzle unit (1) comprises a nozzle plate (1) made of a refractory material clad in a metal can. In order to prevent said plate from being presented to the loading opening with the wrong orientation i.e. with the trailing edge (2d) first said plate is provided with at least one lug (6) at or adjacent the trailing edge (2d) said at least one lug (6) being transverse to said first major axis (X1) and extending substantially beyond the perimeter defining the base of the prism such that the loading opening (16) allows engagement of the base (2c 2d) of the nozzle plate (2) but not of the at least one lug (6). The flexural yield point or ultimate flexural force of said at least one lug (6) is comprised between 10 and 2000 kgf (100 N and 20 kN) which is too high for an operator to reach by hand but which can be handled very easily by a hydraulic mechanical or pneumatic arm (31) which can thus bend or break said at least one lug (6) to push the plate into its casting position only if loaded with its leading edge first.

No. of Pages : 26 No. of Claims : 14

(12) PATENT APPLICATION PUBLICATION
(19) INDIA
(22) Date of filing of Application :20/09/2013
(21) Application No.8221/DELNP/2013 A
(43) Publication Date : 19/12/2014

(54) Title of the invention : METHOD FOR PRODUCING DIESTER OF POLYHYDRIC ALCOHOL AND FATTY ACID

(51) International classification :C07H13/06,C07B61/00
(31) Priority Document No :2011081902
(32) Priority Date :01/04/2011
(33) Name of priority country :Japan
(86) International Application No :PCT/JP2012/057194
Filing Date :21/03/2012
(87) International Publication No :WO 2012/137604
(61) Patent of Addition to Application Number :NA
Filing Date :NA
(62) Divisional to Application Number :NA
Filing Date :NA

(71)**Name of Applicant :**
1)ASAHI KASEI CHEMICALS CORPORATION
Address of Applicant :1 105 Kanda Jinbocho Chiyoda ku Tokyo 1018101 Japan
(72)**Name of Inventor :**
1)KONISHI Kazunobu
2)SATO Mayumi
3)OKAMOTO Makoto

(57) Abstract :
Provided is a method for producing a diester of a polyhydric alcohol and a fatty acid the method being provided with a step of obtaining a diester of a polyhydric alcohol and a fatty acid by reacting a monoester of a polyhydric alcohol and a fatty acid in the presence of a catalyst that contains a hydrotalcite compound.

No. of Pages : 73 No. of Claims : 10

(12) PATENT APPLICATION PUBLICATION
(19) INDIA
(22) Date of filing of Application :20/09/2013
(21) Application No.8222/DELNP/2013 A
(43) Publication Date : 19/12/2014

(54) Title of the invention : DEVICE FOR DETECTING RELATIVE MOVEMENTS IN A VEHICLE

(51) International classification :F16B31/02
(31) Priority Document No :A 517/2011
(32) Priority Date :12/04/2011
(33) Name of priority country :Austria
(86) International Application No :PCT/EP2012/055503
Filing Date :28/03/2012
(87) International Publication No :WO 2012/139893
(61) Patent of Addition to Application Number :NA
Filing Date :NA
(62) Divisional to Application Number :NA
Filing Date :NA

(71)**Name of Applicant :**
1)SIEMENS AG –STERREICH
Address of Applicant :Siemensstrae 90 A 1210 Wien Austria
(72)**Name of Inventor :**
1)W–LS Kurt

(57) Abstract :
The invention relates to a device for the largely automatic detection of relative movements and/or positional changes in components of a vehicle, in particular in rail vehicles and/or trains. Here, what is known as an RFID (radio-frequency identification) transponder (5) is attached to a component (1) to be monitored of the vehicle, for example a component which produces a connection by means of a connecting element (3, 4) to another component (2). Here, the RFID transponder (5) has a predetermined breaking point (6) and is attached to the component (1) in such a way that a relative movement and/or positional change of the component (1,3) leads to the fracture of the RFID transponder (5) at the predetermined breaking point (6) and therefore to the functional loss. By way of the device according to the invention, (even very small) relative movements and/or positional changes of components (1, 2) can therefore already be detected at an early stage in a simple way in a vehicle, in particular in rail vehicles and trains and here, above all, in their undercarriages.

No. of Pages : 15 No. of Claims : 5

(12) PATENT APPLICATION PUBLICATION
(19) INDIA
(22) Date of filing of Application :16/09/2013
(21) Application No.8096/DELNP/2013 A
(43) Publication Date : 19/12/2014

(54) Title of the invention : PUMP FOR DISPENSING A FLUID MATERIAL

(51) International classification :B05B11/00,A61M15/08
(31) Priority Document No :1152488
(32) Priority Date :25/03/2011
(33) Name of priority country :France
(86) International Application No :PCT/FR2012/050595
Filing Date :22/03/2012
(87) International Publication No :WO 2012/131234
(61) Patent of Addition to Application Number :NA
Filing Date :NA
(62) Divisional to Application Number :NA
Filing Date :NA

(71)**Name of Applicant :**
1)APTAR FRANCE SAS
Address of Applicant :Lieudit le Prieur F 27110 Le Neubourg France
(72)**Name of Inventor :**
1)PETIT Ludovic

(57) Abstract :
The invention relates to a pump for dispensing a fluid material comprising a first piston (10) a second piston (20) and a dispensing head (40) provided with a dispensing opening (45) for actuating said pump a stopper (50) being arranged upstream from said dispensing opening (45) said stopper (50) being movable between a position for closing said dispensing opening (45) and a position for opening the latter said second piston (20) being formed outside a hollow part (25) sliding into said dispensing head (40) said first piston (10) sliding inside said hollow part (25) said hollow part (25) comprising an axial opening defined by a radial edge (26) through which a rod portion (52) of the stopper (50) passes said rod portion (52) being defined between a proximal radial shoulder (56) and a distal radial shoulder (57) of the stopper (50). Said stopper (50) is moved from the closed position thereof to the open position thereof by means of said radial edge (26) of said hollow part (25) which engages with said distal radial shoulder (57) and is moved from the open position thereof to the closed position thereof by means of said radial edge (26) which engages with said proximal radial shoulder (56).

No. of Pages : 18 No. of Claims : 11

(12) PATENT APPLICATION PUBLICATION
(19) INDIA
(22) Date of filing of Application :20/09/2013
(21) Application No.8233/DELNP/2013 A
(43) Publication Date : 19/12/2014

(54) Title of the invention : METHOD SYSTEM AND APPARATUS FOR USE IN LOCATING SUBSURFACE ORE BODIES

(51) International classification :G01V9/00,G01N33/24
(31) Priority Document No :2011900683
(32) Priority Date :25/02/2011
(33) Name of priority country :Australia
(86) International Application No :PCT/AU2012/000182
Filing Date :24/02/2012
(87) International Publication No :WO 2012/113032
(61) Patent of Addition to Application Number :NA
Filing Date :NA
(62) Divisional to Application Number :NA
Filing Date :NA

(71)**Name of Applicant :**
1)GLOBAL SCIENTIFIC SERVICES PTY LTD
Address of Applicant :Suite 22 589 Stirling Highway Cottesloe Western Australia 6011 Australia
(72)**Name of Inventor :**
1)WATLING John
2)COOTE Stephen

(57) Abstract :
A method and system for locating subsurface ore bodies. Samples of near surface soil are collected over a predetermined geographical area. The samples are analysed to discover any chemical anomalies in the dust particles as a way of identifying possible subcropping mineralization. A tine (22) and collection tube (24) engage into subsurface soil and samples are drawn up the tube into a dust collection module (12). Sub 5 micron particles are captured on an electrostatically charged tape (40). Consecutive samples are indexed on the tape e.g. with a barcode. Collected dust samples are ablated by a laser ablation cell (72) and the ablated sample analysed by a mass spectrometer for presence of ions indicating presence of a resource body such as a body of ore minerals or hydrocarbons.

No. of Pages : 59 No. of Claims : 35

(12) PATENT APPLICATION PUBLICATION
(19) INDIA
(22) Date of filing of Application :20/09/2013
(21) Application No.8234/DELNP/2013 A
(43) Publication Date : 19/12/2014

(54) Title of the invention : POLYSILICON SYSTEM

(51) International classification :C01B33/021,C01B33/02,B01J8/18
(31) Priority Document No :13/087256
(32) Priority Date :14/04/2011
(33) Name of priority country :U.S.A.
(86) International Application No :PCT/US2012/033664
Filing Date :13/04/2012
(87) International Publication No :WO 2012/142514
(61) Patent of Addition to Application Number :NA
Filing Date :NA
(62) Divisional to Application Number :NA
Filing Date :NA

(71)**Name of Applicant :**
1)REC SILICON INC
Address of Applicant :3322 Road N N.E. Moses Lake WA 98837 U.S.A.
(72)**Name of Inventor :**
1)WILLIAMS David P.
2)KANOFF Nancy

(57) Abstract :
A polysilicon system comprises polysilicon in at least three form factors or shapes providing for an enhanced loading efficiency of a mold or crucible. The system is used in processes to manufacture multi crystalline or single crystal silicon.

No. of Pages : 14 No. of Claims : 27

(12) PATENT APPLICATION PUBLICATION
(19) INDIA
(22) Date of filing of Application :20/09/2013
(21) Application No.8235/DELNP/2013 A
(43) Publication Date : 19/12/2014

(54) Title of the invention : CUTTING INSERT AND REPLACEABLE EDGE ROTARY CUTTING TOOL

(51) International classification :B23C5/20,B23C5/08
(31) Priority Document No :2011097343
(32) Priority Date :25/04/2011
(33) Name of priority country :Japan
(86) International Application No :PCT/JP2012/059856
Filing Date :11/04/2012
(87) International Publication No :WO 2012/147513
(61) Patent of Addition to Application Number :NA
Filing Date :NA
(62) Divisional to Application Number :NA
Filing Date :NA

(71)**Name of Applicant :**
1)TUNGALOY CORPORATION
Address of Applicant :11 1 Yoshima Kogyodanchi Iwaki shi Fukushima 9701144 Japan
(72)**Name of Inventor :**
1)BHAGATH Kedar Suresh

(57) Abstract :
A cutting insert arranged in a tangential direction on an outer peripheral portion of a tool body in which an area on top view is reduced is provided. An upper face (2) has at least five intersection portions (10, 11, 12, 13, and 14) intersecting with the plurality of side faces (4, 5, 6, 7, and 8), the at least five intersection portions include first and second intersection portions (10, 11) and third and fourth intersection portions (14, 12) shorter than the first and second intersection portions (10, 11), respectively, on the first and second intersection portions (10, 11) , a cutting edge is formed, respectively, a rake face (4a, 5a) is formed on side faces (4, 5) corresponding to the first and second intersection portions (10, 11), respectively, and a flank for forming a cutting edge is formed on the upper face (2).

No. of Pages : 48 No. of Claims : 10

(12) PATENT APPLICATION PUBLICATION
(19) INDIA
(22) Date of filing of Application :16/09/2013
(21) Application No.8099/DELNP/2013 A
(43) Publication Date : 19/12/2014

(54) Title of the invention : METHOD FOR PREPARING HYDROXYLAMINE

(51) International classification :C01B21/14
(31) Priority Document No :11163580.1
(32) Priority Date :22/04/2011
(33) Name of priority country :EPO
(86) International Application No :PCT/EP2012/056923
Filing Date :16/04/2012
(87) International Publication No :WO 2012/143330
(61) Patent of Addition to Application Number :NA
Filing Date :NA
(62) Divisional to Application Number :NA
Filing Date :NA

(71)**Name of Applicant :**
1)DSM IP Assets B.V.
Address of Applicant :Het Overloon 1 NL 6411 TE Heerlen Netherlands
(72)**Name of Inventor :**
1)GROOTHAERT Marijke Hilde Leen
2)TINGE Johan Thomas
3)GUIT Rudolph Philippus Maria

(57) Abstract :
The invention relates to a method for preparing hydroxylamine in a continuous process comprising feeding nitrate and phosphate in an acidic aqueous liquid into a reaction zone and reducing nitrate with hydrogen thereby forming hydroxylamine wherein the nitrate concentration in the reaction zone is less than 1.0 mol/kg as determined in the liquid leaving the reaction zone wherein the molar ratio of nitrate to phosphate in the reaction zone is 0.5 or less and wherein the molar ratio of ammonia to nitrate is in the range of from 2.2 to 7; a method for preparing an oxime and a method of preparing a lactam comprising said method for preparing hydroxylamine.

No. of Pages : 18 No. of Claims : 15

(12) PATENT APPLICATION PUBLICATION
(19) INDIA
(22) Date of filing of Application :20/09/2013
(21) Application No.8240/DELNP/2013 A
(43) Publication Date : 19/12/2014

(54) Title of the invention : DEVICE FOR PROVIDING VACUUM FOR THE VACUUM TREATMENT OF WOUNDS

(51) International classification :A61M1/00
(31) Priority Document No :10 2011 075 844.5
(32) Priority Date :13/05/2011
(33) Name of priority country :Germany
(86) International Application No :PCT/EP2012/055438
Filing Date :27/03/2012
(87) International Publication No :WO 2012/156140
(61) Patent of Addition to Application Number :NA
Filing Date :NA
(62) Divisional to Application Number :NA
Filing Date :NA

(71)**Name of Applicant :**
1)PAUL HARTMANN AG
Address of Applicant :Paul Hartmann Strae 12 89522 Heidenheim Germany
(72)**Name of Inventor :**
1)ECKSTEIN Axel
2)HOFSTETTER Juergen

(57) Abstract :
The invention relates to a portable device (2) for providing vacuum for medical applications in particular for the vacuum treatment of wounds on a human or animal body comprising a suction pump (90) which produces vacuum in a first housing part (4) of the device a container (10) for accommodating bodily fluids in particular wound secretions extracted from a wound wherein the container (10) can be detachably fastened to the first housing part (4) of the device and can be subjected in the fastened state to vacuum by the suction pump (90) and wherein a connection (12) is provided on the container (10) for a suction line (82) leading to the body so that vacuum can be communicated between the suction pump (90) the container (10) and the suction line (82) leading to the body a pressure sensor (94) which is arranged between the container (10) and the suction pump (90) for measuring the pressure in a line section (88) a programmable electronic control device (100) which can control the suction pump (90) by at least taking into account the predefined and/or predefinable parameters and the pressure values measured by the pressure sensor (94). The device is characterized in that the electronic control device (100) is designed in such a manner that it deactivates the suction pump (90) when during a continuous operation under vacuum a pressure change rate (/t) which is determined on the basis of the signals of the pressure sensor (94) falls below a predefined threshold value in the direction of decreasing vacuum.

No. of Pages : 31 No. of Claims : 11

(12) PATENT APPLICATION PUBLICATION
(19) INDIA
(22) Date of filing of Application :20/09/2013
(21) Application No.8241/DELNP/2013 A
(43) Publication Date : 19/12/2014

(54) Title of the invention : METHOD FOR FIREPROOFING TEXTILES

(51) International classification :D06M13/285,D06M13/282,D06M13/12
(31) Priority Document No :11166319.1
(32) Priority Date :17/05/2011
(33) Name of priority country :EPO
(86) International Application No :PCT/EP2012/057627
Filing Date :26/04/2012
(87) International Publication No :WO 2012/156190
(61) Patent of Addition to Application Number :NA
Filing Date :NA
(62) Divisional to Application Number :NA
Filing Date :NA

(71)**Name of Applicant :**
1)CTF 2000 NV
Address of Applicant :Baaikensstraat 11 B 9240 Zele Belgium
(72)**Name of Inventor :**
1)DESCHIETERE Johan
2)CARLIER Luc

(57) Abstract :
This invention relates to a method for fireproofing textiles based on a composition having two components comprising: a component A comprising at least one phosphorous compound; and a component B comprising urea and at least one pH buffer optionally with an oxidising agent. Said method for fireproofing textiles includes the steps of immersing said textiles in said composition and of heating oxidising and then washing said textiles which then have excellent human ecological comfort and durable fireproofing properties.

No. of Pages : 20 No. of Claims : 15

(12) PATENT APPLICATION PUBLICATION
(19) INDIA
(22) Date of filing of Application :20/09/2013
(21) Application No.8242/DELNP/2013 A
(43) Publication Date : 19/12/2014

(54) Title of the invention : METHOD FOR TREATING THE SURFACE OF A BANKNOTE

(51) International classification :D21H19/16,D21H19/20,D21H21/18
(31) Priority Document No :1158646
(32) Priority Date :27/09/2011
(33) Name of priority country :France
(86) International Application No :PCT/EP2012/068968
Filing Date :26/09/2012
(87) International Publication No :WO 2013/045496
(61) Patent of Addition to Application Number :NA
Filing Date :NA
(62) Divisional to Application Number :NA
Filing Date :NA

(71)**Name of Applicant :**
1)OBERTHUR FIDUCIAIRE SAS
Address of Applicant :7 avenue Messine F 75008 Paris France
(72)**Name of Inventor :**
1)BORDE Xavier
2)CHAPEAU Guillaume
3)GILLOT Julien

(57) Abstract :
The present invention relates to a method for treating the surface of a banknote (1) comprising, on at least one of its opposing surfaces (20, 21), -i> at least a printed item comprised of at least a design (3), this surface (20, 21) and its associated printed item (3) being covered in a transparent protective coating (R), characterized by the fact that a coating is applied via printing, said coating containing a varnish and an organic chemical compound incorporating fluorine atoms in the form of at least a perfluoro-polyether (PFPE) group, on said surface (20, 21), and by the fact that it is dried.

No. of Pages : 18 No. of Claims : 9

(12) PATENT APPLICATION PUBLICATION
(19) INDIA
(22) Date of filing of Application :16/09/2013
(21) Application No.8106/DELNP/2013 A
(43) Publication Date : 19/12/2014

(54) Title of the invention : SYSTEMS AND METHODS FOR HEAT EXCHANGE

(51) International classification :A23C3/02,A23L3/02,A23L3/22
(31) Priority Document No :61/453921
(32) Priority Date :17/03/2011
(33) Name of priority country :U.S.A.
(86) International Application No :PCT/US2012/028425
Filing Date :09/03/2012
(87) International Publication No :WO 2012/125440
(61) Patent of Addition to Application Number :NA
Filing Date :NA
(62) Divisional to Application Number :NA
Filing Date :NA

(71)**Name of Applicant :**
1)NESTEC S.A.
Address of Applicant :Avenue Nestle 55 CH 1800 Vevey Switzerland
(72)**Name of Inventor :**
1)BATMAZ Ediz
2)HARTLIEP Barbara Burzinski
3)REYES TREVINO Ricardo
4)BEUTLER Ernst

(57) Abstract :
Heat exchange devices including aseptic cooler devices and systems including same are provided. Methods of using heat exchange device are also provided. In a general embodiment the present disclosure provides heat exchangers having an open chamber configuration and including a first section containing a cooling or heating media and a second section containing a food product. The first section includes a level detecting device that is configured to maintain a level of cooling or heating media in the first section while preventing the cooling or heating media from pressurizing the first section. The open chamber configuration provides an air break at a top portion of the first section that ensures that the cooling or heating media entering the first section is at or close to atmospheric pressure.

No. of Pages : 31 No. of Claims : 31

(12) PATENT APPLICATION PUBLICATION
(19) INDIA
(22) Date of filing of Application :16/09/2013
(21) Application No.8108/DELNP/2013 A
(43) Publication Date : 19/12/2014

(54) Title of the invention : SUPPORT STAND FOR SCREENING TERMINALS

(51) International classification :H01R9/26,H05K7/14,H01R13/447
(31) Priority Document No :10 2011 001 715.1
(32) Priority Date :31/03/2011
(33) Name of priority country :Germany
(86) International Application No :PCT/EP2012/055408
Filing Date :27/03/2012
(87) International Publication No :WO 2012/130843
(61) Patent of Addition to Application Number :NA
Filing Date :NA
(62) Divisional to Application Number :NA
Filing Date :NA

(71)**Name of Applicant :**
1)PHOENIX CONTACT GMBH & CO. KG
Address of Applicant :Flachsmarktstrae 8 32825 Blomberg Germany
(72)**Name of Inventor :**
1)EISERT Klaus

(57) Abstract :
The subject matter of the invention is a support stand for screening terminals having a main body (1) wherein the main body (1) has a holding device (2) for a busbar (6) and a fixing device (3) for fixing the busbar (6) in the holding device (2) it being possible for the main body (1) to be latched onto a mounting rail (4) in such a way that when the busbar (6) is fixed in the holding device (2) by means of the fixing device (3) the longitudinal extent of the mounting rail (4) is parallel to the longitudinal extent of the busbar (6) the holding device (2) is designed in such a way that the busbar (6) can be held in the holding device (2) with any desired angular position which is rotated about its longitudinal axis and that when the busbar (6) is held in the holding device (2) the busbar (6) bears at least partially against the holding device (2) in the angular position and the fixing device (3) is designed in such a way that the busbar (6) can be fixed in the angular position.

No. of Pages : 21 No. of Claims : 10

(12) PATENT APPLICATION PUBLICATION
(19) INDIA
(22) Date of filing of Application :20/09/2013
(21) Application No.8245/DELNP/2013 A
(43) Publication Date : 19/12/2014

(54) Title of the invention : CHANGE TOLERANT METHOD OF GENERATING AN IDENTIFIER FOR A COLLECTION OF ASSETS IN A COMPUTING ENVIRONMENT USING A SECRET SHARING SCHEME

(51) International classification :G06F21/22,G06F7/00
(31) Priority Document No :NA
(32) Priority Date :NA
(33) Name of priority country :NA
(86) International Application No :PCT/CA2011/050141
Filing Date :15/03/2011
(87) International Publication No :WO 2012/122621
(61) Patent of Addition to Application Number :NA
Filing Date :NA
(62) Divisional to Application Number :NA
Filing Date :NA

(71)**Name of Applicant :**
1)IRDETO B.V.
Address of Applicant :Taurus Avenue 105 2132 LS Hoofddorp Netherlands
(72)**Name of Inventor :**
1)EISEN Philip Alan
2)WIENER Michael James
3)GOODES Grant Stewart
4)MUIR James

(57) Abstract :
A secure and fault tolerant or variation tolerant method and system to turn a set of N shares into an identifier even when only M shares from this set have a correct value. A secret sharing algorithm is used to generate a number of candidate identifiers from subsets of shares associated with asset parameters of a collection of assets. The most frequently occurring candidate identifier is then determined to be the final identifier. The method has particular applicability in the fields of node locking and fingerprinting.

No. of Pages : 21 No. of Claims : 37

(12) PATENT APPLICATION PUBLICATION
(19) INDIA
(22) Date of filing of Application :20/09/2013
(21) Application No.8246/DELNP/2013 A
(43) Publication Date : 19/12/2014

(54) Title of the invention : POLE SHOE

(51) International classification :H02K9/22,H02K3/24,H02K3/52
(31) Priority Document No :10 2011 006 681.0
(32) Priority Date :01/04/2011
(33) Name of priority country :Germany
(86) International Application No :PCT/EP2012/055350
Filing Date :26/03/2012
(87) International Publication No:WO 2012/130814
(61) Patent of Addition to Application Number :NA
Filing Date :NA
(62) Divisional to Application Number :NA
Filing Date :NA

(71)**Name of Applicant :**
1)WOBBEN PROPERTIES GMBH
Address of Applicant :Dreekamp 5 26605 Aurich Germany
(72)**Name of Inventor :**
1)LENSCHOW Gerhard

(57) Abstract :
The invention relates to a pole shoe of an electrical machine, in particular a rotor of an electrical generator of a wind turbine generator system, comprising a pole shoe body for conducting a magnetic field and for receiving a winding for conducting an electrical current, in particular an excitation current, for producing the magnetic field, and at least one heat sink, entirely or partially surrounding the pole shoe body, for cooling the pole shoe, wherein the heat sink is arranged between the pole shoe body and the winding.

No. of Pages : 19 No. of Claims : 15

(12) PATENT APPLICATION PUBLICATION
(19) INDIA
(22) Date of filing of Application :20/09/2013
(21) Application No.8247/DELNP/2013 A
(43) Publication Date : 19/12/2014

(54) Title of the invention : PROCESSES FOR THE MANUFACTURE OF MACROCYCLIC DEPSIPEPTIDES AND NEW INTERMEDIATES

(51) International classification :C07K11/02
(31) Priority Document No :61/477319
(32) Priority Date :20/04/2011
(33) Name of priority country :U.S.A.
(86) International Application No :PCT/IB2012/051977
Filing Date :19/04/2012
(87) International Publication No :WO 2012/143888
(61) Patent of Addition to Application Number :NA
Filing Date :NA
(62) Divisional to Application Number :NA
Filing Date :NA

(71)**Name of Applicant :**
1)NOVARTIS AG
Address of Applicant :Lichtstrasse 35 CH 4056 Basel Switzerland
(72)**Name of Inventor :**
1)ACEMOGLU Murat
2)HELLSTERN Heribert
3)KOLLMER Felix
4)LOPEZ John
5)SCHREIBER Robert
6)SPRECHER Christian
7)STETTLER Hans

(57) Abstract :
The invention relates to a method or process for the chemical manufacture of depsipeptides of the formula (I) wherein the symbols have the meaning defined in the description to new intermediates and their manufacture as well as related invention embodiments.

No. of Pages : 113 No. of Claims : 22

(12) PATENT APPLICATION PUBLICATION
(19) INDIA
(22) Date of filing of Application :16/09/2013
(21) Application No.8104/DELNP/2013 A
(43) Publication Date : 19/12/2014

(54) Title of the invention : NUTRITIONAL COMPOSITIONS INCLUDING BRANCHED CHAIN FATTY ACIDS AND METHODS OF USING SAME

(51) International classification :A61K31/20,A61K31/201,A61K31/202
(31) Priority Document No :61/474452
(32) Priority Date :12/04/2011
(33) Name of priority country :U.S.A.
(86) International Application No :PCT/EP2012/056664
Filing Date :12/04/2012
(87) International Publication No :WO 2012/140133
(61) Patent of Addition to Application Number :NA
Filing Date :NA
(62) Divisional to Application Number :NA
Filing Date :NA

(71)**Name of Applicant :**
1)NESTEC S.A.
Address of Applicant :Av. Nestl 55 CH 1800 Vevey Switzerland
(72)**Name of Inventor :**
1)BOLSTER Doug
2)GREENBERG Norman Alan
3)MAGER Jennifer
4)ROUGHEAD Zamzam Kabiry (Fariba)

(57) Abstract :
Nutritional compositions for improving treating and/or preventing various medical conditions and methods of using same are provided. The medical conditions may include allergies autoimmune diseases among others. The nutritional compositions include branched chain fatty acids and may include other functional ingredients such as but not limited to probiotics nucleotides and amino acids. Methods of administering such nutritional products to individuals in need of same are also provided.

No. of Pages : 35 No. of Claims : 42

(12) PATENT APPLICATION PUBLICATION
(19) INDIA
(22) Date of filing of Application :20/09/2013
(21) Application No.8250/DELNP/2013 A
(43) Publication Date : 19/12/2014

(54) Title of the invention : SUSPENSION TYPE TOPICAL FORMULATIONS COMPRISING CYCLIC DEPSIPEPTIDE

(51) International classification :A61K9/06,A61K38/15,A61K47/06
(31) Priority Document No :61/477297
(32) Priority Date :20/04/2011
(33) Name of priority country :U.S.A.
(86) International Application No :PCT/IB2012/051946
Filing Date :18/04/2012
(87) International Publication No :WO 2012/143868
(61) Patent of Addition to Application Number :NA
Filing Date :NA
(62) Divisional to Application Number :NA
Filing Date :NA

(71)**Name of Applicant :**
1)NOVARTIS AG
Address of Applicant :Lichtstrasse 35 CH 4056 Basel Switzerland
(72)**Name of Inventor :**
1)HAUG Claire

(57) Abstract :
The invention relates to novel topical pharmaceutical compositions in which the active agent is a cyclic depsipeptide of formula (II) and to methods for manufacturing such compositions. The application discloses in particular hydrophobic ointments comprising a hydrophobic base and a consistency agent preferably isopropyl myristate

No. of Pages : 20 No. of Claims : 12

(12) PATENT APPLICATION PUBLICATION
(19) INDIA
(22) Date of filing of Application :20/09/2013
(21) Application No.8251/DELNP/2013 A
(43) Publication Date : 19/12/2014

(54) Title of the invention : DEFORMED WEB MATERIALS

(51) International classification :A61F13/511
(31) Priority Document No :13/094185
(32) Priority Date :26/04/2011
(33) Name of priority country :U.S.A.
(86) International Application No :PCT/US2012/034937
Filing Date :25/04/2012
(87) International Publication No :WO 2012/148980
(61) Patent of Addition to Application Number :NA
Filing Date :NA
(62) Divisional to Application Number :NA
Filing Date :NA

(71)**Name of Applicant :**
1)THE PROCTER & GAMBLE COMPANY
Address of Applicant :One Procter & Gamble Plaza Cincinnati Ohio 45202 U.S.A.
(72)**Name of Inventor :**
1)HAMMONS John Lee
2)ORR Jill Marlene
3)CURRO John Joseph
4)STRUBE John Brian
5)STONE Keith Joseph

(57) Abstract :
Deformed web materials are disclosed. The web materials have discrete deformations formed therein. The deformations may be features in the form of portions of a web with apertures therein protrusions depressed areas and combinations thereof. These features may extend out from the surface on one side of the web or from both of the surfaces of the web. Different features may be intermixed with one another.

No. of Pages : 68 No. of Claims : 12

(12) PATENT APPLICATION PUBLICATION
(19) INDIA
(22) Date of filing of Application :20/09/2013
(21) Application No.8252/DELNP/2013 A
(43) Publication Date : 19/12/2014

(54) Title of the invention : DISPENSER WITH RUPTURE MEMBER

(51) International classification :B65D23/04,B65D47/06,B65D81/32
(31) Priority Document No :NA
(32) Priority Date :NA
(33) Name of priority country:NA
(86) International Application No :PCT/US2011/033399
Filing Date :21/04/2011
(87) International Publication No :WO 2012/145003
(61) Patent of Addition to Application Number :NA
Filing Date :NA
(62) Divisional to Application Number :NA
Filing Date :NA

(71)**Name of Applicant :**
1)COLGATE PALMOLIVE COMPANY
Address of Applicant :300 Park Avenue New York New York 10022 U.S.A.
(72)**Name of Inventor :**
1)FRISCH Kathleen
2)HILLIARD Peter R. Jr.
3)STAGL Peter M.

(57) Abstract :
A dispenser (100) having a reservoir (210) containing a composition (211) comprising a first substance (220) and at least one bead (230) immersed in the first substance the bead comprising a shell (231) containing a second substance (232); a dispensing conduit (320) for dispensing the composition from the reservoir; and a rupture member (330) disposed within the dispensing conduit the rupture member comprising at least one aperture (331 A C) and at least one barb (332) extending into the aperture the at least one barb rupturing the shell of the at least one bead as the composition flows through the at least one aperture.

No. of Pages : 25 No. of Claims : 30

(12) PATENT APPLICATION PUBLICATION
(19) INDIA
(22) Date of filing of Application :20/09/2013
(21) Application No.8253/DELNP/2013 A
(43) Publication Date : 19/12/2014

(54) Title of the invention : PACKAGE OF ORAL CARE IMPLEMENTS

(51) International classification :B65D75/08,B65D85/20
(31) Priority Document No :NA
(32) Priority Date :NA
(33) Name of priority country :NA
(86) International Application No :PCT/CN2011/000718
Filing Date :27/04/2011
(87) International Publication No :WO 2012/145856
(61) Patent of Addition to Application Number :NA
Filing Date :NA
(62) Divisional to Application Number :NA
Filing Date :NA

(71)**Name of Applicant :**
1)COLGATE PALMOLIVE COMPANY
Address of Applicant :300 Park Avenue New York NY 10022 U.S.A.
(72)**Name of Inventor :**
1)LE Yi Jun
2)ZHANG Feng Zhi

(57) Abstract :
A package (1000) of oral care implements comprises an enclosure (100) having an internal cavity (110) a retainer (200) and a plurality of oral care implements (300) detachably mounted to the retainer (200) in a fixed orientation relative to one another. The retainer (200) and the oral care implements (300) are disposed within the internal cavity (110) of the enclosure (100).

No. of Pages : 28 No. of Claims : 35

(12) PATENT APPLICATION PUBLICATION
(19) INDIA
(22) Date of filing of Application :20/09/2013
(21) Application No.8254/DELNP/2013 A
(43) Publication Date : 19/12/2014

(54) Title of the invention : LAMINATED CORE ASSEMBLY

(51) International classification :H02K3/32
(31) Priority Document No :10 2011 006 680.2
(32) Priority Date :01/04/2011
(33) Name of priority country :Germany
(86) International Application No :PCT/EP2012/055530
Filing Date :28/03/2012
(87) International Publication No :WO 2012/130892
(61) Patent of Addition to Application Number :NA
Filing Date :NA
(62) Divisional to Application Number :NA
Filing Date :NA

(71)**Name of Applicant :**
1)WOBBEN PROPERTIES GMBH
Address of Applicant :Dreekamp 5 26605 Aurich Germany
(72)**Name of Inventor :**
1)LENSCHOW Gerhard

(57) Abstract :
The invention relates to a laminated core assembly of an electric generator, in particular of a generator of a gearless wind turbine. The laminated core assembly comprises at 5 least one laminated core, at least one winding arranged around the laminated core, and an electrical insulating means arranged between the laminated core and the winding, wherein the insulating means has a composite material for conducting the heat arising in the winding.

No. of Pages : 15 No. of Claims : 15

(12) PATENT APPLICATION PUBLICATION
(19) INDIA
(22) Date of filing of Application :19/09/2013
(21) Application No.8200/DELNP/2013 A
(43) Publication Date : 19/12/2014

(54) Title of the invention : LOW WEIGHT AND DENSITY FIRE RESISTANT GYPSUM PANEL

(51) International classification :C04B20/06,C04B28/14
(31) Priority Document No :13/035800
(32) Priority Date :25/02/2011
(33) Name of priority country :U.S.A.
(86) International Application No :PCT/US2012/026595
Filing Date :24/02/2012
(87) International Publication No :WO 2012/116313
(61) Patent of Addition to Application Number :NA
Filing Date :NA
(62) Divisional to Application Number :NA
Filing Date :NA

(71)**Name of Applicant :**
1)UNITED STATES GYPSUM COMPANY
Address of Applicant :550 West Adams Street Chicago Illinois 60661 3676 U.S.A.
(72)**Name of Inventor :**
1)YU Qiang
2)SONG Weixin David
3)VEERAMASUNENI Srinivas
4)LUAN Wenqi

(57) Abstract :
An about 5/8 inch to 3/4 inch thick low weight low density gypsum panel with fire resistance capabilities sufficient to provide a Thermal Insulation Index of at least 17.0 minutes which when subjected to U419 test procedures will not fail for at least 30 minutes and in selected embodiments also has outstanding water resistance properties.

No. of Pages : 62 No. of Claims : 12

(12) PATENT APPLICATION PUBLICATION
(19) INDIA
(22) Date of filing of Application :19/09/2013
(21) Application No.8202/DELNP/2013 A
(43) Publication Date : 19/12/2014

(54) Title of the invention : SECURE PAYMENT SYSTEM USING A MOBILE PHONE AND PAYMENT METHOD USING SAME

(51) International classification :G06Q20/40,G06Q20/16,H04W4/02
(31) Priority Document No :1020110017483
(32) Priority Date :27/02/2011
(33) Name of priority country :Republic of Korea
(86) International Application No :PCT/KR2011/009815
Filing Date :20/12/2011
(87) International Publication No :WO 2012/115341
(61) Patent of Addition to Application Number :NA
Filing Date :NA
(62) Divisional to Application Number :NA
Filing Date :NA

(71)**Name of Applicant :**
1)PARK Gui Sug
Address of Applicant :746 Junggye Brownstone 506 Junggye dong Nowon gu Seoul 139 220 Republic of Korea
(72)**Name of Inventor :**
1)PARK Gui Sug

(57) Abstract :
The present invention relates to a secure payment system and method using a mobile phone, wherein a purchaser makes payments using various credit cards and a seller confirms the payments instantly through a payment-receiving terminal, and more particularly, to a secure payment system and method using a mobile phone, wherein: a purchaser accesses a payment system using the mobile phone having a card registered therein and inputs and transmits seller information, a payment, and a password; a payment system recognizes and stores the inputs and extracts necessary information with a view to transmitting same to a credit-card company and a financial institution; and, if approval is granted by the credit-card company and financial institution, an approval number is automatically inputted in a process list of the payment system, and then a short message service (SMS) is simultaneously provided to the mobile phones of the purchaser and of the seller and to a payment-receiving terminal of the seller for payment confirmation.

No. of Pages : 54 No. of Claims : 4

(12) PATENT APPLICATION PUBLICATION
(19) INDIA
(22) Date of filing of Application :23/09/2013
(21) Application No.8264/DELNP/2013 A
(43) Publication Date : 19/12/2014

(54) Title of the invention : A/D CONVERTER SOLID STATE IMAGING DEVICE AND DRIVE METHOD AS WELL AS ELECTRONIC APPARATUS

(51) International classification :H04N5/378,H03M1/56
(31) Priority Document No :2011075959
(32) Priority Date :30/03/2011
(33) Name of priority country :Japan
(86) International Application No :PCT/JP2012/057527
Filing Date :23/03/2012
(87) International Publication No :WO 2012/133192
(61) Patent of Addition to Application Number :NA
Filing Date :NA
(62) Divisional to Application Number :NA
Filing Date :NA

(71)**Name of Applicant :**
1)SONY CORPORATION
Address of Applicant :1 7 1 Konan Minato ku Tokyo 1080075 Japan
(72)**Name of Inventor :**
1)HIGUCHI Kenichi
2)INADA Yoshiaki

(57) Abstract :
The present technology relates to an A/D converter, a solid-state image pickup device and a method of driving the same, and an electronic apparatus which are capable of reducing power consumption while reducing a circuit size. A comparator compares a reference voltage with an input voltage, the reference voltage having a ramp waveform whose voltage value varies with time, a lower-bit storage element holds a count value in a predetermined count pattern, based on an output signal from the comparator, a Gray code binary conversion circuit converts the count value in the count pattern held by the lower-bit storage element into binary data, and a storing operation control circuit supplies a pulse signal corresponding to the binary data obtained by conversion in the Gray code binary conversion circuit to a lower-bit U/D CNT. The present technology is applicable to, for example, an image sensor storing a count value in a storage element with use of a Gray code or a phase shift code as a clock signal.

No. of Pages : 60 No. of Claims : 20

(12) PATENT APPLICATION PUBLICATION
(19) INDIA
(22) Date of filing of Application :23/09/2013
(21) Application No.8265/DELNP/2013 A
(43) Publication Date : 19/12/2014

(54) Title of the invention : RECEIVER APPARATUS RECEPTION METHOD PROGRAM AND RECEPTION SYSTEM

(51) International classification :H04B1/26,H04J11/00
(31) Priority Document No :2011080120
(32) Priority Date :31/03/2011
(33) Name of priority country :Japan
(86) International Application No :PCT/JP2012/057528
Filing Date :23/03/2012
(87) International Publication No :WO 2012/133193
(61) Patent of Addition to Application Number :NA
Filing Date :NA
(62) Divisional to Application Number :NA
Filing Date :NA

(71)**Name of Applicant :**
1)SONY CORPORATION
Address of Applicant :1 7 1 Konan Minato ku Tokyo 1080075 Japan
(72)**Name of Inventor :**
1)OKAMOTO Takuya
2)TAKAHASHI Hiroo
3)GOTO Yuken

(57) Abstract :
The present technology relates to a receiving device, a receiving method, a program, and a receiving system which may improve reception performance in the 5 case of receiving a signal with a variable frequency band. A receiving device according to an embodiment of the present technology includes a demodulation unit configured to convert a received signal to a baseband signal in the case where a first frequency differs from a 10 second frequency, wherein the first frequency is a. center frequency in a band of the received signal, the second frequency is a center frequency in a band of a desired signal included in a part of the band of the received signal, and a DC component of the baseband signal is to 15 be a frequency in the vicinity of the second frequency. The present technology may be applied to a receiver which receives an OFDM signal of DVB-C2.

No. of Pages : 85 No. of Claims : 11

(12) PATENT APPLICATION PUBLICATION
(19) INDIA
(22) Date of filing of Application :16/09/2013
(21) Application No.8088/DELNP/2013 A
(43) Publication Date : 19/12/2014

(54) Title of the invention : MULTIPLE USE DISPOSABLE INJECTION PEN

(51) International classification :A61M5/20
(31) Priority Document No :61/457391
(32) Priority Date :16/03/2011
(33) Name of priority country :U.S.A.
(86) International Application No :PCT/US2012/029308
Filing Date :15/03/2012
(87) International Publication No :WO 2012/125876
(61) Patent of Addition to Application Number :NA
Filing Date :NA
(62) Divisional to Application Number :NA
Filing Date :NA

(71)**Name of Applicant :**
1)BECTON DICKINSON AND COMPANY
Address of Applicant :Mark Schildkraut MC089 1 Becton Drive Franklin Lakes New Jersey 07417 U.S.A.
(72)**Name of Inventor :**
1)QUINN Michael
2)CRONENBERG Richard

(57) Abstract :
A medication injection pen (51) includes a housing (1) and a dose set knob (2) having at least one internal tooth (22). A brake member (5) has a plurality of axially extending splines (52). A driver or setback member (9) includes at least one external tooth (92) engaging the at least one internal tooth (22) of the dose set knob (2) and at least one ratchet arm (96) engaging the plurality of axially extending splines (52). The driver (9) is prevented from rotating with the dose set knob (2) while moving axially with the dose set knob (2) during dose setting and dose correcting and the driver (9) rotates with the dose set knob (2) during an injection.

No. of Pages : 96 No. of Claims : 20

(12) PATENT APPLICATION PUBLICATION
(19) INDIA
(22) Date of filing of Application :20/09/2013
(21) Application No.8229/DELNP/2013 A
(43) Publication Date : 19/12/2014

(54) Title of the invention : A DEVICE FOR DIRECTING THE FLOW OF A FLUID USING A CENTRIFUGAL SWITCH

(51) International classification :E21B43/12,E21B34/08
(31) Priority Document No :13/100006
(32) Priority Date :03/05/2011
(33) Name of priority country :U.S.A.
(86) International Application No :PCT/US2012/033534
Filing Date :13/04/2012
(87) International Publication No :WO 2012/151036
(61) Patent of Addition to Application Number :NA
Filing Date :NA
(62) Divisional to Application Number :NA
Filing Date :NA

(71)**Name of Applicant :**
1)HALLIBURTON ENERGY SERVICES INC.
Address of Applicant :10200 Bellaire Boulevard Houston TX 77072 U.S.A.
(72)**Name of Inventor :**
1)FRIPP Michael L.
2)DYKSTRA Jason D.

(57) Abstract :
According to an embodiment a device for directing the flow of a fluid comprises: a fluid chamber; a first outlet; a second outlet; a first outlet fluid passageway wherein the first outlet fluid passageway is operatively connected to the first outlet; and a second outlet fluid passageway wherein the second outlet fluid passageway is operatively connected to the second outlet; wherein the fluid rotationally flows about the inside of the chamber and wherein the fluid flowing through the first outlet fluid passageway conjoins with the fluid flowing through the second outlet fluid passageway at a point downstream of the first and second outlet. According to another embodiment a device for directing the flow of a fluid comprises: a sensor; a first outlet connected to the sensor; a second outlet connected to the sensor; a first outlet fluid passageway; and a second outlet fluid passageway; wherein as the total number of phases of the fluid increases the sensor directs at least a first phase of the fluid into the first outlet fluid passageway and directs at least a second phase of the fluid into the second outlet fluid passageway and wherein the fluid flowing through the first outlet fluid passageway conjoins with the fluid flowing through the second outlet fluid passageway at a point downstream of the first and second outlet.

No. of Pages : 34 No. of Claims : 20

(12) PATENT APPLICATION PUBLICATION
(19) INDIA
(22) Date of filing of Application :20/09/2013
(21) Application No.8230/DELNP/2013 A
(43) Publication Date : 19/12/2014

(54) Title of the invention : RECOVERY OF RETROGRADE SOLUBLE SOLUTE FOR FORWARD OSMOSIS WATER TREATMENT

(51) International classification :B01D11/00,B01D37/00,C02F1/28
(31) Priority Document No :61/517687
(32) Priority Date :25/04/2011
(33) Name of priority country :U.S.A.
(86) International Application No :PCT/US2012/034723
Filing Date :23/04/2012
(87) International Publication No :WO 2012/148864
(61) Patent of Addition to Application Number :NA
Filing Date :NA
(62) Divisional to Application Number :NA
Filing Date :NA

(71)**Name of Applicant :**
1)TREVI SYSTEMS INC.
Address of Applicant :1 Willowbrook Court Suite 140 Petaluma CA 94954 U.S.A.
(72)**Name of Inventor :**
1)CARMIGNANI Gary
2)SITKIEWITZ Steve
3)WEBLEY John Wilfred

(57) Abstract :
Improved systems and processes for forward osmosis water purification or desalination are herein disclosed. According to one embodiment a process for purifying contaminated water is provided wherein a contaminated feed solution stream comprising water and with a first osmotic pressure is passed through a semipermeable membrane to a draw side having a draw solution stream with a second osmotic pressure on a draw side of the semipermeable membrane. The diluted draw solution stream is heated agglomerated and cooled to produce a cooled single phase water rich stream that is purified to produce a water product stream.

No. of Pages : 27 No. of Claims : 23

(12) PATENT APPLICATION PUBLICATION
(19) INDIA
(22) Date of filing of Application :23/09/2013
(21) Application No.8270/DELNP/2013 A
(43) Publication Date : 19/12/2014

(54) Title of the invention : POWER RECEIVING COIL POWER RECEPTION DEVICE AND CONTACTLESS POWER TRANSMISSION SYSTEM

(51) International classification :H01F38/14,H02J17/00
(31) Priority Document No :2011081016
(32) Priority Date :31/03/2011
(33) Name of priority country :Japan
(86) International Application No :PCT/JP2012/052142
Filing Date :31/01/2012
(87) International Publication No :WO 2012/132535
(61) Patent of Addition to Application Number :NA
Filing Date :NA
(62) Divisional to Application Number :NA
Filing Date :NA

(71)**Name of Applicant :**
1)SONY CORPORATION
Address of Applicant :1 7 1 Konan Minato ku Tokyo 1080075 Japan
(72)**Name of Inventor :**
1)YOSHINO Yoshitaka
2)MURAKAMI Tomomichi
3)KATO Yoshihiro

(57) Abstract :
Provided is a device including a receiving coil, including a core having a magnetic body, a coil portion in which a wire is wound around the core and which is 5 electromagnetically coupled to an external coil to transmit power, and a nonmagnetic body arranged at a predetermined distance from a side face of the coil portion.

No. of Pages : 30 No. of Claims : 7

(12) PATENT APPLICATION PUBLICATION
(19) INDIA
(22) Date of filing of Application :19/09/2013
(21) Application No.8214/DELNP/2013 A
(43) Publication Date : 19/12/2014

(54) Title of the invention : ABSORBENT MEMBERS HAVING SKEWED DENSITY PROFILE

(51) International classification :A61F13/534
(31) Priority Document No :13/094279
(32) Priority Date :26/04/2011
(33) Name of priority country :U.S.A.
(86) International Application No :PCT/US2012/034935
Filing Date :25/04/2012
(87) International Publication No :WO 2012/148978
(61) Patent of Addition to Application Number :NA
Filing Date :NA
(62) Divisional to Application Number :NA
Filing Date :NA

(71)**Name of Applicant :**
1)THE PROCTER & GAMBLE COMPANY
Address of Applicant :One Procter & Gamble Plaza Cincinnati Ohio 45202 U.S.A.
(72)**Name of Inventor :**
1)MARINELLI Luigi
2)LAKE Kirk Wallace
3)ORR Jill Marlene
4)WEISMAN Paul Thomas
5)PRIESSMAN Keith Robert
6)CIMINI Carmine
7)DI PILLA Mario

(57) Abstract :
Absorbent members and methods of making the same are disclosed. In one embodiment the absorbent member is a unitary absorbent fibrous web having a density profile through its thickness. In such an embodiment the density profile of the fibrous web is skewed toward one of the surfaces of the fibrous web. In such embodiments the maximum density of the web may be located outside of the central 30% zone of thickness of the web.

No. of Pages : 80 No. of Claims : 10

(12) PATENT APPLICATION PUBLICATION
(19) INDIA
(22) Date of filing of Application :23/09/2013
(21) Application No.8285/DELNP/2013 A
(43) Publication Date : 19/12/2014

(54) Title of the invention : TRANSCRIPTION TERMINATOR SEQUENCES

(51) International classification :C12N15/70
(31) Priority Document No :11168637.4
(32) Priority Date :03/06/2011
(33) Name of priority country :EPO
(86) International Application No :PCT/EP2012/060490
Filing Date :04/06/2012
(87) International Publication No :WO 2012/164100
(61) Patent of Addition to Application Number :NA
Filing Date :NA
(62) Divisional to Application Number :NA
Filing Date :NA

(71)**Name of Applicant :**
1)SANDOZ AG
Address of Applicant :Lichtstrae 35 CH 4056 Basel Switzerland
2)BOEHRINGER INGELHEIM RCV GMBH & CO KG
(72)**Name of Inventor :**
1)STRIEDNER Gerald
2)WITTWER Alexander

(57) Abstract :
The present invention provides new transcription termination signal sequences especially a polynucleotide comprising at least two consecutive transcription termination signals characterized in that said consecutive transcription termination signals comprise at least a first and a second transcription termination signal that are at most 1000 nucleotides apart and at least one of the termination signal has or encodes a RNA hairpin structure.

No. of Pages : 70 No. of Claims : 28

(12) PATENT APPLICATION PUBLICATION
(19) INDIA
(22) Date of filing of Application :23/09/2013
(21) Application No.8286/DELNP/2013 A
(43) Publication Date : 19/12/2014

(54) Title of the invention : CONFIGURATION AND PROCESS FOR COMPRESSING A GAS

(51) International classification :E03B3/28,F03D9/00,F04B35/00
(31) Priority Document No :1038701
(32) Priority Date :23/03/2011
(33) Name of priority country :Netherlands
(86) International Application No :PCT/NL2012/050145
Filing Date :09/03/2012
(87) International Publication No :WO 2012/128619
(61) Patent of Addition to Application Number :NA
Filing Date :NA
(62) Divisional to Application Number :NA
Filing Date :NA

(71)**Name of Applicant :**
1)AQUA GUTTA B.V.
Address of Applicant :G. van Nijenrodestraat 96 NL 3621 GM Breukelen Netherlands
(72)**Name of Inventor :**
1)VAN DER VLIET Karl Hans

(57) Abstract :
The invention is directed to a configuration for compressing a gas comprising (i) a reciprocating compressor (8) wherein the compressor comprises a mechanical drive to transfer energy from a variable rotational power source (1) to the compressor and a control valve (34 35) and an adjustable swash plate (30) wherein adjusting the control valve results in adjusting the swash plate; (ii) a speed sensor (7) to measure the rotational speed of the power source; (iii) a first control means which control means is capable of adjusting the control valve as a function of the rotational speed measured by the speed sensor.

No. of Pages : 23 No. of Claims : 27

(12) PATENT APPLICATION PUBLICATION
(19) INDIA
(22) Date of filing of Application :23/09/2013
(21) Application No.8287/DELNP/2013 A
(43) Publication Date : 19/12/2014

(54) Title of the invention : ORAL CARE KIT

(51) International classification :B65D75/58,A46B11/00
(31) Priority Document No :NA
(32) Priority Date :NA
(33) Name of priority country :NA
(86) International Application No :PCT/US2011/032649
Filing Date :15/04/2011
(87) International Publication No :WO 2012/141716
(61) Patent of Addition to Application Number :NA
Filing Date :NA
(62) Divisional to Application Number :NA
Filing Date :NA

(71)**Name of Applicant :**
1)COLGATE PALMOLIVE COMPANY
Address of Applicant :300 Park Avenue New York New York 10022 U.S.A.
(72)**Name of Inventor :**
1)HOHLBEIN Douglas J.

(57) Abstract :
An oral care kit includes a sachet having a ring shaped reservoir for an oral care material configured around a central opening. The sachet has a first weakened portion for forming a dispensing nozzle. The oral care kit also includes an oral care implement sized so that a portion of the oral care implement fits through the central opening. The oral care implement is configured to be used to tear the first weakened portion of the reservoir.

No. of Pages : 42 No. of Claims : 10

(12) PATENT APPLICATION PUBLICATION
(19) INDIA
(22) Date of filing of Application :23/09/2013
(21) Application No.8288/DELNP/2013 A
(43) Publication Date : 19/12/2014

(54) Title of the invention : GLASS ROOF HAVING A SLIDING AND TILTING MOBILE PANEL

(51) International classification :B60J7/02
(31) Priority Document No :1152894
(32) Priority Date :04/04/2011
(33) Name of priority country :France
(86) International Application No :PCT/EP2012/055525
Filing Date :28/03/2012
(87) International Publication No :WO 2012/136540
(61) Patent of Addition to Application Number :NA
Filing Date :NA
(62) Divisional to Application Number :NA
Filing Date :NA

(71)**Name of Applicant :**
1)ADVANCED COMFORT SYSTEMS FRANCE SAS ACS FRANCE
Address of Applicant :Parc dActivit du Moulin Jacquet 5 7 rue du Moulin Jacquet ZI n° 2 F 79302 Bressuire Cedex France
(72)**Name of Inventor :**
1)DESBOIS Micka«l

(57) Abstract :
The invention relates to a glass roof of a motor vehicle, comprising a fixed part (111) and a panel (112) that is mobile with respect to the fixed part (111), able to close an opening (13) formed in or next to said fixed part (111), in a closed position, the movement of said mobile panel (112) being implemented with the aid of two shuttles (24) guided in translation respectively in two rails (21), each of 10 said shuttles (24) engaging with a peg (26) secured to said mobile panel (112). According to the invention, said mobile panel (112) carries two bearing elements (23) that bear against bearing surfaces (R) formed respectively on a longitudinal portion of said rails (21), defining a third movement zone in which said mobile panel (112) is slid with respect to said fixed part (111), parallel to the rails (21), 15 said bearing surface (R) being interrupted in an end portion of each of said rails (21) so as to allow said bearing elements (23) to move in a direction perpendicular to said rails (21).

No. of Pages : 34 No. of Claims : 11

(12) PATENT APPLICATION PUBLICATION
(19) INDIA
(22) Date of filing of Application :20/09/2013
(21) Application No.8243/DELNP/2013 A
(43) Publication Date : 19/12/2014

(54) Title of the invention : METHOD AND CELLS FOR IDENTIFYING RIG I PATHWAY REGULATORS

(51) International classification	:A61K31/5415,A61K31/538,A61K48/00
(31) Priority Document No	:61/446898
(32) Priority Date	:25/02/2011
(33) Name of priority country	:U.S.A.
(86) International Application No	:PCT/US2012/026387
Filing Date	:23/02/2012
(87) International Publication No	:WO 2012/154271
(61) Patent of Addition to Application Number	:NA
Filing Date	:NA
(62) Divisional to Application Number	:NA
Filing Date	:NA

(71)**Name of Applicant :**
1)KINETA INC.
Address of Applicant :219 Terry Ave N. Suite 300 Seattle WA 98109 5208 U.S.A.
(72)**Name of Inventor :**
1)IADONATO Shawn P.
2)BEDARD Kristin

(57) Abstract :
Disclosed herein are methods for identifying compounds for the treatment of viral infection including RNA viral infection and uses of the compounds as pharmaceutical compositions. The identified compounds modulate the RIG I pathway in vertebrate cells.

No. of Pages : 86 No. of Claims : 20

(12) PATENT APPLICATION PUBLICATION
(19) INDIA
(22) Date of filing of Application :20/09/2013
(21) Application No.8244/DELNP/2013 A
(43) Publication Date : 19/12/2014

(54) Title of the invention : IMPROVED ENCODING AND DECODING OF VARIABLE LENGTH DATA WITH GROUP FORMATS

(51) International classification :G06F17/30
(31) Priority Document No :61/446364
(32) Priority Date :24/02/2011
(33) Name of priority country :U.S.A.
(86) International Application No :PCT/US2012/026152
Filing Date :22/02/2012
(87) International Publication No :WO 2012/116086
(61) Patent of Addition to Application Number :NA
Filing Date :NA
(62) Divisional to Application Number :NA
Filing Date :NA

(71)**Name of Applicant :**
1)A9.COM INC.
Address of Applicant :130 Lytton Avenue Suite 300 Palo Alto CA 94301 1044 U.S.A.
(72)**Name of Inventor :**
1)ROSE Daniel E.
2)STEPANOV Alexander A.
3)GANGOLLI Anil Ramesh
4)OBEROI Paramjit S.
5)ERNST Ryan Jacob

(57) Abstract :
Embodiments provide methods and systems for encoding and decoding variable length data which may include methods for encoding and decoding search engine posting lists. Embodiments may include different encoding formats including group unary packed unary and/or packed binary formats. Some embodiments may utilize single instruction multiple data (SIMD) instructions that may perform a parallel shuffle operation on encoded data as part of the decoding processes. Some embodiments may utilize lookup tables to determine shuffle sequences and/or masks and/or shifts to be utilized in the decoding processes. Some embodiments may utilize hybrid formats.

No. of Pages : 93 No. of Claims : 15

(12) PATENT APPLICATION PUBLICATION
(19) INDIA
(22) Date of filing of Application :23/09/2013
(21) Application No.8293/DELNP/2013 A
(43) Publication Date : 19/12/2014

(54) Title of the invention : NOVEL PROCESS AND CATALYST SYSTEM FOR IMPROVING DEWAXING CATALYST STABILITY AND LUBRICANT OIL YIELD

(51) International classification :C10G45/10,C10G67/02,C10M101/02
(31) Priority Document No :NA
(32) Priority Date :NA
(33) Name of priority country :NA
(86) International Application No :PCT/US2011/030763
Filing Date :31/03/2011
(87) International Publication No :WO 2012/134484
(61) Patent of Addition to Application Number :NA
Filing Date :NA
(62) Divisional to Application Number :NA
Filing Date :NA

(71)**Name of Applicant :**
1)CHEVRON U.S.A. INC.
Address of Applicant :6001 Bollinger Canyon Road San Ramon California 94583 U.S.A.
(72)**Name of Inventor :**
1)KRISHNA Kamala R.
2)ZIEMER James N.
3)RAINIS Andrew
4)BISCARDI Joseph A.
5)HARRIS Thomas V.

(57) Abstract :
The invention provides for a process for dewaxing a waxy hydrocarbon feedstock to form a lubricant oil. The invention is also directed to a catalyst system comprising a hydrotreating catalyst upstream of a dewaxing catalyst used in the dewaxing of a waxy hydrocarbon feedstock to form a lubricant oil. In particular the invention is directed to a process and catalyst system designed to maintain yield of lubricant oil product. Specifically the yield of lubricant oil does not decrease more than 2% at a target pour point over a dewaxing temperature range. The hydrotreating catalyst helps prevent aging of the dewaxing catalyst and maintains lubricant oil product yield at a target pour point over a wide temperature range. The hydrotreating catalyst comprises platinum palladium or combinations thereof on a low acidity inorganic oxide support where acidity is measured by a decalin conversion of less than 10% at 700F.

No. of Pages : 42 No. of Claims : 22

(12) PATENT APPLICATION PUBLICATION
(19) INDIA
(22) Date of filing of Application :23/09/2013
(21) Application No.8294/DELNP/2013 A
(43) Publication Date : 19/12/2014

(54) Title of the invention : POROUS CARBON AND METHOD FOR PRODUCING SAME

(51) International classification :C01B31/02
(31) Priority Document No :2011051830
(32) Priority Date :09/03/2011
(33) Name of priority country :Japan
(86) International Application No :PCT/JP2012/056075
Filing Date :09/03/2012
(87) International Publication No :WO 2012/121363
(61) Patent of Addition to Application Number :NA
Filing Date :NA
(62) Divisional to Application Number :NA
Filing Date :NA

(71)**Name of Applicant :**
1)TOYO TANSO CO. LTD.
Address of Applicant :7 12 Takeshima 5 chome Nishiyodogawa ku Osaka shi Osaka 5550011 Japan
(72)**Name of Inventor :**
1)MORISHITA Takahiro
2)ORIKASA Hironori
3)TATSUMI Makoto
4)OHTA Naoto
5)OKADA Masaki

(57) Abstract :
A porous carbon that has an extremely high specific surface area while being crystalline, and a method of manufacturing the porous carbon are provided. A porous carbon has mesopores 4 and a carbonaceous wall 3 constituting an outer wall of the mesopores 4, wherein the carbonaceous wall 3 has a portion forming a layered structure. The porous carbon is fabricated by mixing a polyamic acid resin 1 as a carbon precursor with magnesium oxide 2 as template particles; heat-treating the mixture in a nitrogen atmosphere at 1000°C for 1 hour to cause the polyamic acid resin to undergo heat decomposition; washing the resultant sample with a sulfuric acid solution at a concentration of 1 mol/L to dissolve MgO away; and heat-treating the noncrystalline porous carbon in a nitrogen atmosphere at 2500°C.

No. of Pages : 47 No. of Claims : 28

(12) PATENT APPLICATION PUBLICATION
(19) INDIA
(22) Date of filing of Application :23/09/2013
(21) Application No.8295/DELNP/2013 A
(43) Publication Date : 19/12/2014

(54) Title of the invention : METHOD AND ARRANGEMENT FOR BUILDING METALLIC OBJECTS BY SOLID FREEDOM FABRICATION

(51) International classification :B22F3/105,B23K26/34
(31) Priority Document No :1105433.5
(32) Priority Date :31/03/2011
(33) Name of priority country :U.K.
(86) International Application No :PCT/NO2012/000033
Filing Date :30/03/2012
(87) International Publication No :WO 2012/134299
(61) Patent of Addition to Application Number :NA
Filing Date :NA
(62) Divisional to Application Number :NA
Filing Date :NA

(71)**Name of Applicant :**
1)NORSK TITANIUM COMPONENTS AS
Address of Applicant :Sommerrogaten 13 15 N 0255 Oslo Norway
(72)**Name of Inventor :**
1)STEMPFER Ferdinand

(57) Abstract :
This invention relates to a method and arrangement for manufacturing objects by solid freeform fabrication, especially titanium and titanium alloy objects, wherein the deposition rate is increased by supplying the metallic feed material in the form of a wire and employing two gas transferred arcs, one plasma transferred arc for heating the deposition area on the base material and one plasma transferred arc for heating and melting the feed wire.

No. of Pages : 19 No. of Claims : 10

(12) PATENT APPLICATION PUBLICATION
(19) INDIA
(22) Date of filing of Application :20/09/2013
(21) Application No.8256/DELNP/2013 A
(43) Publication Date : 19/12/2014

(54) Title of the invention : SUPERHYDROPHOBIC AND OLEOPHOBIC COATINGS WITH LOW VOC BINDER SYSTEMS

(51) International classification :C09K3/18,C09D175/04,B23B5/02
(31) Priority Document No :61/445001
(32) Priority Date :21/02/2011
(33) Name of priority country :U.S.A.
(86) International Application No :PCT/US2012/025982
Filing Date :21/02/2012
(87) International Publication No :WO 2012/115986
(61) Patent of Addition to Application Number :NA
Filing Date :NA
(62) Divisional to Application Number :NA
Filing Date :NA

(71)**Name of Applicant :**
1)ROSS TECHNOLOGY CORPORATION
Address of Applicant :104 N. Maple Avenue Leola PA 17540 0646 U.S.A.
(72)**Name of Inventor :**
1)GESFORD Josh
2)HURLEY Michael
3)JONES Andrew K.
4)LOR Boon Chan
5)SIKKA Vinod K.
6)HARSH Phillip

(57) Abstract :
Coating compositions for the preparation of superhydrophobic (SH) and/or oleophobic (OP) surfaces that employ low amounts of volatile organic compounds are described. Also described are the resulting coatings/coated surfaces and methods of their preparation. Such coatings/surfaces have a variety of uses including their ability to prevent or resist water dirt and/or ice from attaching to a surface.

No. of Pages : 100 No. of Claims : 20

(12) PATENT APPLICATION PUBLICATION
(19) INDIA
(22) Date of filing of Application :20/09/2013
(21) Application No.8257/DELNP/2013 A
(43) Publication Date : 19/12/2014

(54) Title of the invention : INFORMATION PROCESSING APPARATUS AND INFORMATION PROCESSING METHOD RECORDING MEDIUM AND PROGRAM

(51) International classification :G06F3/048,G06F3/041
(31) Priority Document No :2011072377
(32) Priority Date :29/03/2011
(33) Name of priority country :Japan
(86) International Application No :PCT/JP2012/001977
Filing Date :22/03/2012
(87) International Publication No :WO 2012/132343
(61) Patent of Addition to Application Number :NA
Filing Date :NA
(62) Divisional to Application Number :NA
Filing Date :NA

(71)**Name of Applicant :**
1)SONY CORPORATION
Address of Applicant :1 7 1 Konan Minato ku Tokyo 1080075 Japan
(72)**Name of Inventor :**
1)IGARI Tatsuya

(57) Abstract :
A user interface apparatus provides multiple touch panels coupled to a processor and operating as a single touch panel. Multiple touch inputs can be provided to the multiple touch panels. The touch panels provide spatial and temporal touch information to the processor such that the touch inputs are reliably analyzed by the processor even when a predetermined maximum touch count is imposed.

No. of Pages : 47 No. of Claims : 19

(12) PATENT APPLICATION PUBLICATION
(19) INDIA
(22) Date of filing of Application :20/09/2013
(21) Application No.8258/DELNP/2013 A
(43) Publication Date : 19/12/2014

(54) Title of the invention : SECURITY STRIP AND DOCUMENT PROVIDED THEREWITH

(51) International classification :D21H21/42,B42D15/10
(31) Priority Document No :1157952
(32) Priority Date :07/09/2011
(33) Name of priority country :France
(86) International Application No :PCT/EP2012/066764
Filing Date :29/08/2012
(87) International Publication No :WO 2013/034476
(61) Patent of Addition to Application Number :NA
Filing Date :NA
(62) Divisional to Application Number :NA
Filing Date :NA

(71)**Name of Applicant :**
1)OBERTHUR FIDUCIAIRE SAS
Address of Applicant :7 avenue Messine F 75008 Paris France
(72)**Name of Inventor :**
1)BORDE Xavier
2)CHAPEAU Guillaume
3)GILLOT Julien
4)COU‹TY Valrie

(57) Abstract :
The present invention relates in particular to a security strip (1) to be partially embedded into the structure of a security document (2) at least partially made of fibers said strip being flush at the surface of the document in the form of a set of windows (F) and including a transparent or translucent support material which is coated on one so called upper surface thereof with a coating that is visible by means of reflection and which includes a longitudinal strip (3) which is at least partially free of said coating and which separates first and second thread forming areas (4 4) coated with said coating characterized in that each of the thread forming areas (4 4) has two different optical renderings and/or patterns that are visible by means of reflection respectively and in that said thread forming areas include negative patterns (M) referenced relative to one another respectively i.e. at least one pair of said referenced patterns always has the same spacing pitch along said areas.

No. of Pages : 17 No. of Claims : 9

(12) PATENT APPLICATION PUBLICATION
(19) INDIA
(22) Date of filing of Application :23/09/2013
(21) Application No.8300/DELNP/2013 A
(43) Publication Date : 19/12/2014

(54) Title of the invention : FORMULATIONS AND METHODS TO REDUCE HEXAVALENT CHROME CONTAMINATION

(51) International classification :A62D3/37,C23C22/83
(31) Priority Document No :61/469123
(32) Priority Date :30/03/2011
(33) Name of priority country :U.S.A.
(86) International Application No :PCT/US2012/031398
Filing Date :30/03/2012
(87) International Publication No :WO 2012/135594
(61) Patent of Addition to Application Number :NA
Filing Date :NA
(62) Divisional to Application Number :NA
Filing Date :NA

(71)**Name of Applicant :**
1)BATTELLE MEMORIAL INSTITUTE
Address of Applicant :505 King Avenue Columbus OH 43201 2693 U.S.A.
(72)**Name of Inventor :**
1)MONZYK Bruce F.
2)USINOWICZ Paul J.
3)HEISS Derik R.
4)GADKARI Vinay V.
5)STROPKI John T.

(57) Abstract :
The present invention includes formulations and methods to reduce Cr(VI) contamination in which the formulation comprises (1) a reactive reducing agent comprising at least one reducing chemical capable of reducing Cr(VI) to Cr(III); and (b) one or more solvents. Moreover the present invention includes formulations to reduce Cr(VI) within the coating and Cr(VI) reducing kits with at least one color reference tool for evaluating the process and/or completion of the Cr(VI) reduction.

No. of Pages : 70 No. of Claims : 19

(12) PATENT APPLICATION PUBLICATION
(19) INDIA
(22) Date of filing of Application :23/09/2013
(21) Application No.8301/DELNP/2013 A
(43) Publication Date : 19/12/2014

(54) Title of the invention : WATER SELF REGULATED HORTICULTURAL GROWING AND SUPPORT MEDIUM

(51) International classification :A01G31/00
(31) Priority Document No :11156480.3
(32) Priority Date :01/03/2011
(33) Name of priority country :EPO
(86) International Application No :PCT/EP2012/053446
Filing Date :29/02/2012
(87) International Publication No :WO 2012/117022
(61) Patent of Addition to Application Number :NA
Filing Date :NA
(62) Divisional to Application Number :NA
Filing Date :NA

(71)**Name of Applicant :**
1)RECTIGRO B.V.
Address of Applicant :Spoorstraat 69 NL 4041 CL Kesteren Netherlands
(72)**Name of Inventor :**
1)JANCIC Anne
2)HESSE Huib
3)VAN DIJK Bert

(57) Abstract :
The present invention concerns a horticultural growing and support medium comprising a synthetic foam slab permeable to water said foam slab comprising: (a) A first growing surface (1) whence plants grow to ambient and (b) An opposite second draining surface (2) separated from the growing surface by the thickness of the block wherein a limited portion only of the second draining surface is coated with a coating (2B) having a permeability to water substantially lower than the slab material preferably substantially impervious to water for controlling the draining and storage of water contained in the slab and characterized in that the porous slab is made of a synthetic foam having an open porosity.

No. of Pages : 17 No. of Claims : 10

(12) PATENT APPLICATION PUBLICATION
(19) INDIA
(22) Date of filing of Application :17/09/2013
(21) Application No.8123/DELNP/2013 A
(43) Publication Date : 19/12/2014

(54) Title of the invention : LOW LOSS LOW LATENCY HOLLOW CORE FIBER COMMUNICATION SYSTEM

(51) International classification :G02B6/032,G02B6/02,H04B10/12
(31) Priority Document No :13/035285
(32) Priority Date :25/02/2011
(33) Name of priority country :U.S.A.
(86) International Application No :PCT/US2012/024272
Filing Date :08/02/2012
(87) International Publication No :WO 2012/115780
(61) Patent of Addition to Application Number :NA
Filing Date :NA
(62) Divisional to Application Number :NA
Filing Date :NA

(71)**Name of Applicant :**
1)CORNING INCORPORATED
Address of Applicant :1 Riverfront Plaza Corning New York 14831 U.S.A.
(72)**Name of Inventor :**
1)KOCH Karl W. III
2)TEN Sergey Yurevich
3)WEST James Andrew

(57) Abstract :
An optical fiber communication system includes hollow core fiber coupled between a transmitter device and a receiver device. Both hollow core fiber and solid core fiber may be optically coupled between the transmitter and receiver devices with the hollow core fiber preceding the solid core fiber. A Raman pump laser may be coupled to the solid core fiber to provide distributed Raman amplification in the solid core fiber. A plurality of series connected spans of hollow and solid core fiber may be employed. First and second transmission lines each having a hollow core fiber may be provided in a single cable.

No. of Pages : 18 No. of Claims : 25

(12) PATENT APPLICATION PUBLICATION
(19) INDIA
(22) Date of filing of Application :17/09/2013
(21) Application No.8125/DELNP/2013 A
(43) Publication Date : 19/12/2014

(54) Title of the invention : A DEVICE AND A METHOD OF CLEANING AN EFFLUENT GAS FROM AN ALUMINIUM PRODUCTION ELECTROLYTIC CELL

(51) International classification :B01D53/10,B01D53/14,B01D53/50
(31) Priority Document No :11154939.0
(32) Priority Date :18/02/2011
(33) Name of priority country:EPO
(86) International Application No :PCT/IB2012/000231
Filing Date :08/02/2012
(87) International Publication No :WO 2012/110868
(61) Patent of Addition to Application Number :NA
Filing Date :NA
(62) Divisional to Application Number :NA
Filing Date :NA

(71)**Name of Applicant :**
1)ALSTOM Technology Ltd
Address of Applicant :Brown Boveri Strasse 7 CH 5400 Baden Switzerland
(72)**Name of Inventor :**
1)BJARNO Odd Edgar
2)WEDDE Geir

(57) Abstract :
A gas cleaning unit (1) for cleaning an effluent gas of at least one aluminium production electrolytic cell comprises a contact reactor (4 6) in which the effluent gas is brought into contact with alumina and a dust removal device (10) for removing at least a portion of the alumina. The gas cleaning unit (1) further comprises a wet scrubber (12) in which the effluent gas is brought into contact with an absorption liquid containing water for removing further pollutants from the effluent gas. The wet scrubber (12) is positioned at a point vertically higher than that of the dust removal device (10).

No. of Pages : 17 No. of Claims : 15

(12) PATENT APPLICATION PUBLICATION
(19) INDIA
(22) Date of filing of Application :17/09/2013
(21) Application No.8126/DELNP/2013 A
(43) Publication Date : 19/12/2014

(54) Title of the invention : DEVICE FOR SEPARATING WATER DROPLETS FROM A GAS OR VAPOR FLOW

(51) International classification :B01D45/04
(31) Priority Document No :00506/11
(32) Priority Date :23/03/2011
(33) Name of priority country :Switzerland
(86) International Application No :PCT/EP2012/055165
Filing Date :23/03/2012
(87) International Publication No :WO 2012/127022
(61) Patent of Addition to Application Number :NA
Filing Date :NA
(62) Divisional to Application Number :NA
Filing Date :NA

(71)**Name of Applicant :**
1)ALSTOM TECHNOLOGY LTD
Address of Applicant :Brown Boveri Strasse 7 CH 5400 Baden Switzerland
(72)**Name of Inventor :**
1)STUCKI Christian Peter

(57) Abstract :
A moisture separator for a steam turbine power plant for separating moisture from a flow of vapor or gas comprises a bundle of vanes (3) having a corrugated portion (3a 3b) and a trailing edge (4). The trailing edge (4) comprises means to collect moisture on the surfaces of the trailing edge (4). These means can include a clip like attachment (5) or a U shape of the trailing edge itself. The collection means on the trailing edge (4) contribute to the overall moisture separation efficiency of the moisture separator and a decrease of risk of damage to the steam turbine driven by the steam flow.

No. of Pages : 19 No. of Claims : 12

(12) PATENT APPLICATION PUBLICATION
(19) INDIA
(22) Date of filing of Application :17/09/2013
(21) Application No.8127/DELNP/2013 A
(43) Publication Date : 19/12/2014

(54) Title of the invention : METHOD OF PRODUCING A STEAM TURBINE DEFLECTOR

(51) International classification :B23P15/00,F01D9/04
(31) Priority Document No :1152006
(32) Priority Date :11/03/2011
(33) Name of priority country :France
(86) International Application No :PCT/EP2012/054172
Filing Date :09/03/2012
(87) International Publication No :WO 2012/123379
(61) Patent of Addition to Application Number :NA
Filing Date :NA
(62) Divisional to Application Number :NA
Filing Date :NA

(71)**Name of Applicant :**
1)ALSTOM TECHNOLOGY LTD
Address of Applicant :Brown Boveri Strasse 7 CH 5400 Baden Switzerland
(72)**Name of Inventor :**
1)BUGUIN Arnaud
2)TRAVERS Dominique

(57) Abstract :
The invention relates to a method for manufacturing a steam turbine low pressure or medium pressure module deflector (1) said deflector (1) comprising an internal ring (2) and an external ring (3) as well as vanes (4) said method comprising a step of welding said vanes (4) to said rings (2 3). The main characteristic of a method according to the invention is that the welding step is preceded by a step of automatically machining the ends (6 7) of each vane (4) to create a peripheral recess (12) around each of said ends (6 7).

No. of Pages : 15 No. of Claims : 9

(12) PATENT APPLICATION PUBLICATION
(19) INDIA
(22) Date of filing of Application :17/09/2013
(21) Application No.8128/DELNP/2013 A
(43) Publication Date : 19/12/2014

(54) Title of the invention : CHANGE TOLERANT METHOD FOR GENERATING IDENTIFIER FOR COLLECTION OF ASSETS IN COMPUTING ENVIRONMENT USING ERROR CORRECTION CODE SCHEME

(51) International classification :G06F9/44
(31) Priority Document No :NA
(32) Priority Date :NA
(33) Name of priority country :NA
(86) International Application No :PCT/CN2011/000417
Filing Date :15/03/2011
(87) International Publication No :WO 2012/122674
(61) Patent of Addition to Application Number :NA
Filing Date :NA
(62) Divisional to Application Number :NA
Filing Date :NA

(71)**Name of Applicant :**
1)IRDETO B.V.
Address of Applicant :Taurus Avenue 105 NL 2132 LS Hoofddorp Netherlands
(72)**Name of Inventor :**
1)ZHANG Fan
2)WAJS Andrew

(57) Abstract :
A secure and change tolerant method for obtaining an identifier for a collection of assets associated with a computing environment. Each asset has an asset parameter and the computing environment has a fingerprint based on an original collection of assets and on a codeword generation algorithm on the original collection of assets. The method comprises: retrieving the asset parameters of the collection of assets and processing the retrieved asset parameters to obtain code symbols. An error correction algorithm is applied to the code symbols to obtain the identifier. The method can be used in node locking.

No. of Pages : 27 No. of Claims : 34

(12) PATENT APPLICATION PUBLICATION
(19) INDIA
(22) Date of filing of Application :23/09/2013
(21) Application No.8302/DELNP/2013 A
(43) Publication Date : 19/12/2014

(54) Title of the invention : BATTERY HOLDER APPARATUS AND METHOD

(51) International classification :H01M6/42
(31) Priority Document No :12/932611
(32) Priority Date :01/03/2011
(33) Name of priority country :U.S.A.
(86) International Application No :PCT/US2012/000052
Filing Date :01/02/2012
(87) International Publication No :WO 2012/118556
(61) Patent of Addition to Application Number :NA
Filing Date :NA
(62) Divisional to Application Number :NA
Filing Date :NA

(71)**Name of Applicant :**
1)HOMERUN HOLDINGS CORP. AN OHIO CORPORATION
Address of Applicant :3400 Copter Road Pensacola FL 32514 U.S.A.
(72)**Name of Inventor :**
1)MULLET Willis Jay
2)WYSOCZYNSKI Christopher Lee
3)ASBURY Harry Edward

(57) Abstract :
A battery holder apparatus and method includes a sleeve with an inside surface and an outside surface where the sleeve is flexible. A battery receiving space is created within the sleeve where the battery receiving space expands and the sleeve flexes to accommodate a battery when inserted therein and the inside surface at least partially contacts the battery. And a connection device is provided on the outside surface of the sleeve.

No. of Pages : 25 No. of Claims : 20

(12) PATENT APPLICATION PUBLICATION
(19) INDIA
(22) Date of filing of Application :24/09/2013
(21) Application No.8311/DELNP/2013 A
(43) Publication Date : 19/12/2014

(54) Title of the invention : NETWORK ENABLED DISPENSER

(51) International classification :G01F15/06,G08B21/24
(31) Priority Document No :13/070996
(32) Priority Date :24/03/2011
(33) Name of priority country :U.S.A.
(86) International Application No :PCT/US2012/025642
Filing Date :17/02/2012
(87) International Publication No :WO 2012/161766
(61) Patent of Addition to Application Number :NA
Filing Date :NA
(62) Divisional to Application Number :NA
Filing Date :NA

(71)**Name of Applicant :**
1)GOJO INDUSTRIES INC.
Address of Applicant :One Gojo Plaza Suite 500 P.O. Box 991 Akron OH 44309 U.S.A.
(72)**Name of Inventor :**
1)WEGELIN Jackson W.
2)OKEEFE Patrick J.
3)MOORE Andrew A.

(57) Abstract :
A network enabled dispenser is configured to bidirectionally communicate with a remote computer system via a wireless network. The dispenser transmits operation data to the remote computer system upon the dispensing of material such as soap. The remote computer system is configured to generate hygiene compliance reports deliver informational content to the dispenser for presentation thereon as well as to provide an interface where an administrator can adjust one or more of the dispenser s functions.

No. of Pages : 17 No. of Claims : 15

(12) PATENT APPLICATION PUBLICATION
(19) INDIA
(22) Date of filing of Application :24/09/2013
(21) Application No.8312/DELNP/2013 A
(43) Publication Date : 19/12/2014

(54) Title of the invention : METHOD AND SYSTEM FOR DETECTING A SHORT CIRCUIT AFFECTING A SENSOR

(51) International classification :G01R31/02,G01R27/14,G01R31/28
(31) Priority Document No :1152936
(32) Priority Date :05/04/2011
(33) Name of priority country:France
(86) International Application No :PCT/FR2012/050727
Filing Date :04/04/2012
(87) International Publication No :WO 2012/136931
(61) Patent of Addition to Application Number :NA
Filing Date :NA
(62) Divisional to Application Number :NA
Filing Date :NA

(71)**Name of Applicant :**
1)SAGEM DEFENSE SECURITE
Address of Applicant :Le Ponant de Paris 27 Rue Leblanc F 75015 Paris France
(72)**Name of Inventor :**
1)LACOMBE Bertrand
2)GENESTE Nicolas

(57) Abstract :
In accordance with the invention, the method of 5 detecting a short circuit affecting a sensor (10, 110) , at least one terminal (Bl, B2) of the sensor being connected to a bias resistor (21, 22, 121), consists in: applying to at least one bias resistor (21, 22, 121) at least one test bias voltage having at least one 10 predefined characteristic that is different from a corresponding characteristic of a nominal bias voltage of the resistor; measuring the resulting differential voltage across the terminals of the sensor; and 15 as a function of at least one characteristic of the measured differential voltage corresponding to the predefined characteristic of the test bias voltages, determining whether the sensor presents a short circuit.

No. of Pages : 27 No. of Claims : 10

(12) PATENT APPLICATION PUBLICATION
(19) INDIA
(22) Date of filing of Application :24/09/2013
(21) Application No.8315/DELNP/2013 A
(43) Publication Date : 19/12/2014

(54) Title of the invention : MEDICAL DEVICE WITH INTERFERENCE MEMBERS TO PREVENT RE USE

(51) International classification :A61B17/32,A61B17/00
(31) Priority Document No :13/075327
(32) Priority Date :30/03/2011
(33) Name of priority country :U.S.A.
(86) International Application No :PCT/US2012/030506
Filing Date :26/03/2012
(87) International Publication No :WO 2012/135087
(61) Patent of Addition to Application Number :NA
Filing Date :NA
(62) Divisional to Application Number :NA
Filing Date :NA

(71)**Name of Applicant :**
1)SMITH & NEPHEW INC.
Address of Applicant :1450 Brooks Road Memphis Tennessee 38116 U.S.A.
(72)**Name of Inventor :**
1)SHENER IRMAKOGLU Cemal
2)JEZIERSKI Rafal Z.
3)LORETH Brian J.

(57) Abstract :
A medical resection device (100) that includes an outer tube assembly (103) that includes a straight outer tube (102) an inner tube assembly (104) that includes a straight inner tube (110) disposed within the outer tube and at least one interference member on the outer tube assembly and at least one interference member on the inner tube assembly. The inner tube and the outer tube are configured to rotate relative to each other to resect tissue at a distal end of the inner and outer tubes. The interference members are configured to prevent a force exerted along a longitudinal axis of the inner tube from separating the inner and outer tubes without rendering the medical device unusable. The medical resection device can include a burr on the inner tube or a first cutting surface on the outer tube and a second cutting surface on the inner tube. Exemplary interference members can be various combinations of a groove a pin a ring a ridge a snap mechanism step features and others.

No. of Pages : 39 No. of Claims : 25

(12) PATENT APPLICATION PUBLICATION
(19) INDIA
(22) Date of filing of Application :24/09/2013
(21) Application No.8316/DELNP/2013 A
(43) Publication Date : 19/12/2014

(54) Title of the invention : LOCKING SCREWS AND PLATES

(51) International classification :F16B27/00
(31) Priority Document No :61/452216
(32) Priority Date :14/03/2011
(33) Name of priority country :U.S.A.
(86) International Application No :PCT/US2012/029018
Filing Date :14/03/2012
(87) International Publication No :WO 2012/125691
(61) Patent of Addition to Application Number :NA
Filing Date :NA
(62) Divisional to Application Number :NA
Filing Date :NA

(71)**Name of Applicant :**
1)SINHA Amit
Address of Applicant :2112 Fairwold Lane Fort Washington PA 19034 U.S.A.
(72)**Name of Inventor :**
1)SINHA Amit

(57) Abstract :
A screw is configured to be inserted into an aperture of a plate. The screw comprises a head a neck that extends distally from the head and having a diameter a shoulder that extends distally from the neck and has a diameter and a shaft that extends distally from the shoulder and has a thread a major diameter and a minor diameter. The diameter of shoulder is larger than the diameter of the neck and larger than the minor diameter of the shaft.

No. of Pages : 24 No. of Claims : 24

(12) PATENT APPLICATION PUBLICATION
(19) INDIA
(22) Date of filing of Application :23/09/2013
(21) Application No.8276/DELNP/2013 A
(43) Publication Date : 19/12/2014

(54) Title of the invention : FRICTION CLUTCH PLATE WITH DAMPING SPRINGS

(51) International classification :F16F15/123,F16D13/64
(31) Priority Document No :2011900820
(32) Priority Date :08/03/2011
(33) Name of priority country :Australia
(86) International Application No :PCT/AU2011/000807
Filing Date :29/06/2011
(87) International Publication No :WO 2012/119179
(61) Patent of Addition to Application Number :NA
Filing Date :NA
(62) Divisional to Application Number :NA
Filing Date :NA

(71)**Name of Applicant :**
1)CLUTCH INDUSTRIES PTY LTD
Address of Applicant :15 Macquarie Drive Thomastown Victoria 3074 Australia
(72)**Name of Inventor :**
1)BIBBY Damian

(57) Abstract :
A clutch plate (100) including a plate assembly (111) having an annular periphery to which an assembly of friction material (114 115) is applied to face in opposite directions. A hub (120) is provided for connection to an output shaft and a hub flange (132) is driveable by the plate assembly to rotate. The hub (120) is driveable to rotate by the hub flange (132). The hub (120) and the hub flange (132) are angularly displaceable relative to each other within a predetermined range and are coupled together by a tension spring (125) which extends radially relative to the axis of rotation of the hub and which applies a biasing load against relative angular displacement between the hub (120) and the hub flange (132). A further embodiment is disclosed where the plate assembly (111) and the hub flange (132) are angularly displaceable relative to each other within a predetermined range and being coupled together by at least two curved drive springs (150 151) having a constant radius of curvature and being mounted concentric about the hub (120).

No. of Pages : 30 No. of Claims : 23

(12) PATENT APPLICATION PUBLICATION
(19) INDIA
(22) Date of filing of Application :23/09/2013
(21) Application No.8277/DELNP/2013 A
(43) Publication Date : 19/12/2014

(54) Title of the invention : SYSTEM FOR CONTROLLED DELIVERY OF MEDICAL FLUIDS

(51) International classification :A61M39/22
(31) Priority Document No :13/065621
(32) Priority Date :25/03/2011
(33) Name of priority country :U.S.A.
(86) International Application No :PCT/US2012/000164
Filing Date :26/03/2012
(87) International Publication No :WO 2012/134593
(61) Patent of Addition to Application Number :NA
Filing Date :NA
(62) Divisional to Application Number :NA
Filing Date :NA

(71)**Name of Applicant :**
1)LEVY Kimberley
Address of Applicant :P.O.B 7125 Fort Myers FL 33911 U.S.A.
2)LEVY Frank
(72)**Name of Inventor :**
1)LEVY Kimberley
2)LEVY Frank

(57) Abstract :
A system for controlled delivery of medical fluids to a patient includes an inlet conduit attached to a source of a medical fluid and an outlet conduit connected to the patient. The inlet and outlet conduits are interconnected by a multiple stage control valve assembly and a pair of syringes. The control valve assembly is alternated between a first state wherein the inlet conduit communicates with a first syringe for transmitting fluid from the source to the first syringe a second state wherein the first syringe communicates with a second syringe and is isolated from the inlet conduit and the outlet for transmitting fluid from the first syringe to the second syringe and a third state wherein the second syringe communicates with the outlet and is isolated from the inlet and the first syringe for transmitting fluid from the second syringe to the patient through the outlet.

No. of Pages : 47 No. of Claims : 27

(12) PATENT APPLICATION PUBLICATION
(19) INDIA
(22) Date of filing of Application :23/09/2013

(21) Application No.8278/DELNP/2013 A
(43) Publication Date : 19/12/2014

(54) Title of the invention : SYRINGE HEAD EJECTOR UNIT AND SYRINGE FORMED FROM SAME

(51) International classification :A61M5/28,A61M5/32,A61M5/24
(31) Priority Document No :GM 107/2011
(32) Priority Date :23/02/2011
(33) Name of priority country :Austria
(86) International Application No :PCT/AT2012/050024
Filing Date :23/02/2012
(87) International Publication No :WO 2012/113008
(61) Patent of Addition to Application Number :NA
Filing Date :NA
(62) Divisional to Application Number :NA
Filing Date :NA

(71)**Name of Applicant :**
1)PHARMA CONSULT GES.M.B.H. & CO NFG KG
Address of Applicant :Divischgasse 4 A 1210 Wien Austria
(72)**Name of Inventor :**
1)PICKHARD Ewald
2)SCHWIRTZ Andreas

(57) Abstract :
The invention relates to a syringe (20) comprising a syringe barrel (15), an ejector unit (25) arranged at the distal end of the syringe barrel (15) with a plunger rod (17), a coupling part (37) and a plunger (16) and an syringe head (21) arranged at the proximal end of the syringe barrel (15) with a needle unit (12) which is arranged in a guide sleeve (5) and is slidable therein with a cannula (3) and a cannula holder (4) and a pinion (2), by means of which the needle unit (12) is axially movable, relative to a syringe barrel (15) from a rest position to an actuation position. At the distal end of the guide sleeve (5) a sealing element (7) is arranged. The pinion (2) has at least one guide knob (1), which can be brought into engagement optionally with one of two slide tracks (10) provided in the guide sleeve (5), wherein the slide tracks (10) are inclined in opposite directions.

No. of Pages : 44 No. of Claims : 21

(12) PATENT APPLICATION PUBLICATION
(19) INDIA
(22) Date of filing of Application :23/09/2013
(21) Application No.8279/DELNP/2013 A
(43) Publication Date : 19/12/2014

(54) Title of the invention : TORQUE SUPPORT AND BOGIE FOR A RAIL VEHICLE

(51) International classification :B61C9/50
(31) Priority Document No :10 2011 016 906.7
(32) Priority Date :13/04/2011
(33) Name of priority country :Germany
(86) International Application No :PCT/EP2012/001479
Filing Date :03/04/2012
(87) International Publication No :WO 2012/139722
(61) Patent of Addition to Application Number :NA
Filing Date :NA
(62) Divisional to Application Number :NA
Filing Date :NA

(71)**Name of Applicant :**
1)VOITH PATENT GMBH
Address of Applicant :St. Pltener Str. 43 89522 Heidenheim Germany
(72)**Name of Inventor :**
1)STARBATTY Frank

(57) Abstract :
The invention relates to a torque support for the articulated mutual support of two elements, especially a frame or a bogie on the one hand and a housing such as a final drive housing of a rail vehicle on the other hand; comprising a rod, at the two ends of which one respective receiver head is arranged; 10 - the receiver head comprises a bearing for accommodating a bolt which is used for support on the respective element; The invention is characterized by the following features: 15 - the rod is arranged as a sleeve at least in the region of its two ends; the bearing comprises a socket which is arranged in the radial 20 direction of the bolt between the bolt and the receiver head and is supported on the receiver head via at least one further bearing element; 25 - the socket comprises a bulbous section in the manner of a universal ball joint on its outer circumference.

No. of Pages : 14 No. of Claims : 4

(12) PATENT APPLICATION PUBLICATION
(19) INDIA
(22) Date of filing of Application :17/09/2013
(21) Application No.8144/DELNP/2013 A
(43) Publication Date : 19/12/2014

(54) Title of the invention : SYSTEM AND METHOD FOR CONTROLLING AN UNMANNED AIR VEHICLE

(51) International classification :G05D1/00,B64C39/02
(31) Priority Document No :11162507.5
(32) Priority Date :14/04/2011
(33) Name of priority country :EPO
(86) International Application No :PCT/EP2012/056760
Filing Date :13/04/2012
(87) International Publication No :WO 2012/140191
(61) Patent of Addition to Application Number :NA
Filing Date :NA
(62) Divisional to Application Number :NA
Filing Date :NA

(71)**Name of Applicant :**
1)HEXAGON TECHNOLOGY CENTER GMBH
Address of Applicant :Heinrich Wild Strasse CH 9435 Heerbrugg Switzerland
(72)**Name of Inventor :**
1)METZLER Bernhard
2)SIERCKS Knut

(57) Abstract :
The invention relates to a geodetic measuring system (1) having a geodetic measuring unit (30) in particular a total station a theodolite a laser tracker or a laser scanner having a beam source for emitting a substantially collimated optical beam (32) a base a sighting unit which can be pivoted in a motorized manner about two axes relative to the base and is intended to orient an emission direction of the optical beam (32) and angle measurement sensors for determining the orientation of the sighting unit. The measuring system (1) also has an automotive unmanned controllable air vehicle (20) having an optical module (22) wherein the air vehicle (20) is designed in such a manner that the air vehicle (20) can be moved in a controlled manner and can be positioned in a substantially fixed position. An evaluation unit is also provided wherein the evaluation unit is configured in such a manner that an actual state of the air vehicle (20) as determined by a position an orientation and/or a change in position can be determined in a coordinate system from interaction between the optical beam (32) and the optical module (22). The measuring system (1) has a control unit (60) for controlling the air vehicle (20) wherein the control unit (60) is configured in such a manner that control data can be produced using an algorithm on the basis of the actual state which can be continuously determined in particular and a defined desired state and the air vehicle (20) can be automatically changed to the desired state in particular to a defined tolerance range around the desired state in a controlled manner using the control data.

No. of Pages : 52 No. of Claims : 15

(12) PATENT APPLICATION PUBLICATION
(19) INDIA
(22) Date of filing of Application :17/09/2013
(21) Application No.8145/DELNP/2013 A
(43) Publication Date : 19/12/2014

(54) Title of the invention : MOBILE COMMUNICATION SYSTEM RELAY STATION BASE STATION AND CONTROL METHOD THEREOF

(51) International classification :H04W84/04
(31) Priority Document No :2011089287
(32) Priority Date :13/04/2011
(33) Name of priority country :Japan
(86) International Application No :PCT/JP2012/057675
Filing Date :16/03/2012
(87) International Publication No :WO 2012/140999
(61) Patent of Addition to Application Number :NA
Filing Date :NA
(62) Divisional to Application Number :NA
Filing Date :NA

(71)**Name of Applicant :**
1)NEC Corporation
Address of Applicant :7 1 Shiba 5 chome Minato ku Tokyo 1088001 Japan
(72)**Name of Inventor :**
1)AMINAKA Hiroaki
2)KAKURA Yoshikazu

(57) Abstract :
A mobile communication system includes a base station (1) and a relay station (2). The relay station (2) acquires a donor cell list indicating at least one candidate cell that can be used for a backhaul link (BL1). The relay station (2) or the base station (1) determine a donor cell used for the backhaul link (BL1) from the donor cell list based on both first and second cell management information. The first cell management information relates to the at least one candidate cell and originates from the at least one base station (1). The second cell management information originates from the relay station (2).

No. of Pages : 51 No. of Claims : 45

(12) PATENT APPLICATION PUBLICATION
(19) INDIA
(22) Date of filing of Application :17/09/2013
(21) Application No.8146/DELNP/2013 A
(43) Publication Date : 19/12/2014

(54) Title of the invention : CATALYST MATERIAL FOR FUEL CELL

(51) International classification :H01M4/92,H01M4/88,B01J37/16
(31) Priority Document No :NA
(32) Priority Date :NA
(33) Name of priority country :NA
(86) International Application No :PCT/US2011/033747
Filing Date :25/04/2011
(87) International Publication No :WO 2012/148376
(61) Patent of Addition to Application Number :NA
Filing Date :NA
(62) Divisional to Application Number :NA
Filing Date :NA

(71)**Name of Applicant :**
1)UNITED TECHNOLOGIES CORPORATION
Address of Applicant :One Financial Plaza Hartford CT 06101 U.S.A.
(72)**Name of Inventor :**
1)RAMANATHAN Shriram
2)STOLAR Laura Roen

(57) Abstract :
A method of forming a catalyst material includes coating agglomerates of catalyst support particles with an ionomer material. After coating the agglomerates of catalyst support particles a catalyst metal precursor is deposited by chemical infiltration onto peripheral surfaces of the agglomerates of catalyst support particles. The catalyst metal precursor is then chemically reduced to form catalyst metal on the peripheral surfaces of the agglomerates of catalyst support particles.

No. of Pages : 12 No. of Claims : 15

(12) PATENT APPLICATION PUBLICATION
(19) INDIA
(22) Date of filing of Application :17/09/2013
(21) Application No.8147/DELNP/2013 A
(43) Publication Date : 19/12/2014

(54) Title of the invention : INTERNAL STEAM GENERATION FOR FUEL CELL

(51) International classification :H01M8/04,H01M8/10,F25D17/02
(31) Priority Document No :NA
(32) Priority Date :NA
(33) Name of priority country :NA
(86) International Application No :PCT/US2011/033848
Filing Date :26/04/2011
(87) International Publication No :WO 2012/148378
(61) Patent of Addition to Application Number :NA
Filing Date :NA
(62) Divisional to Application Number :NA
Filing Date :NA

(71)**Name of Applicant :**
1)UNITED TECHNOLOGIES CORPORATION
Address of Applicant :One Financial Plaza Hartford Connecticut 06101 U.S.A.
(72)**Name of Inventor :**
1)RAMASWAMY Sitaram

(57) Abstract :
A fuel cell system includes a fuel cell stack having an anode plate and a cathode plate arranged on opposing sides of a proton exchange membrane. Cooling channels are in thermal contact with at least one of the anode plate and the cathode plate and include an internal coolant passage. A pressure drop device is provided in the coolant channels and is configured to provide a sub atmospheric pressure within the coolant passage. In one example the coolant within the coolant passage is at less than ambient pressure. A compression device fluidly interconnects to and is downstream from the internal coolant passage by a coolant system loop and configured to convey a sub atmospheric pressure coolant steam. The compression device is configured to increase the pressure and a temperature of the sub atmospheric coolant steam to a super atmospheric pressure and maintain the coolant steam within a steam region of a pressure enthalpy curve.

No. of Pages : 15 No. of Claims : 15

(12) PATENT APPLICATION PUBLICATION
(19) INDIA
(22) Date of filing of Application :19/09/2013
(21) Application No.8217/DELNP/2013 A
(43) Publication Date : 19/12/2014

(54) Title of the invention : ELECTRONIC CONTROL UNIT ASSEMBLY AND VEHICLE COMPRISING THE SAME

(51) International classification :H01L23/40,B60R16/02
(31) Priority Document No :201110115836.2
(32) Priority Date :29/04/2011
(33) Name of priority country :China
(86) International Application No :PCT/CN2012/074893
Filing Date :28/04/2012
(87) International Publication No :WO 2012/146204
(61) Patent of Addition to Application Number :NA
Filing Date :NA
(62) Divisional to Application Number :NA
Filing Date :NA

(71)**Name of Applicant :**
1)BOSCH AUTOMOTIVE PRODUCTS (SUZHOU) CO. LTD.
Address of Applicant :126 Su Hong Xi Road Suzhou Industrial Park Suzhou Jiangsu 215021 China
(72)**Name of Inventor :**
1)LI Xiuping
2)PANG Jingyu
3)TIAN Stephen

(57) Abstract :
An electronic control unit (ECU) assembly is provided which includes a covering part one or more metal oxide semiconductor field effect transistors (MOSFETs) (1) a substrate and an ECU main body. The covering part includes a lid element (3) having latch parts (6); the lid element (3) is secured onto the ECU main body via the latch parts (6); and the MOSFETs (1) are arranged between the lid element (3) and the substrate (9). The covering part further includes a middle element which is in tight contact with and is elastically pressed against the MOSFETs (1) such that the MOSFETs (1) are brought into tight contact with the substrate. Thereby the MOSFETs (1) are reliably fixed in the ECU assembly. A vehicle including the ECU assembly is also provided.

No. of Pages : 24 No. of Claims : 10

(12) PATENT APPLICATION PUBLICATION
(19) INDIA
(22) Date of filing of Application :19/09/2013

(21) Application No.8219/DELNP/2013 A
(43) Publication Date : 19/12/2014

(54) Title of the invention : LOCAL ACCESS POINT NAME FOR USE IN ACCESSING PACKET DATA NETWORKS

(51) International classification	:H04W8/08,H04W92/02,H04W88/16
(31) Priority Document No	:NA
(32) Priority Date	:NA
(33) Name of priority country	:NA
(86) International Application No	:PCT/EP2011/056769
Filing Date	:28/04/2011
(87) International Publication No	:WO 2012/146291
(61) Patent of Addition to Application Number	:NA
Filing Date	:NA
(62) Divisional to Application Number	:NA
Filing Date	:NA

(71)**Name of Applicant :**
1)TELEFONAKTIEBOLAGET L M ERICSSON (PUBL)
Address of Applicant :S 164 83 Stockholm Sweden
(72)**Name of Inventor :**
1)TUR NYI Zolt¡n Rich¡rd
2)ROELAND Dinand

(57) Abstract :
One aspect provides a method of enabling a user entity UE (10) to access a local Packet Data Network PDN when the UE (10) accesses an Evolved Packet Core EPC network via a Broadband Forum BBF defined access network over the S2a interface. The method includes receiving a request from the UE in the EPC (203 204) the request including one or more Access Point Names APNs. A decision (205) is made to offload at least one of the APNs by designating it as a local APN. Communications are established between the UE and a PDN identified by use of the designated local APN in a session set up request from the UE. The communications are established directly (505) via the BBF defined access network and so as to avoid passing data packets via the EPC. Other aspects include an EPC network entity a Broadband Network Gateway BNG (22) in a BBF defined access network (20) and User equipment (10) configured in accordance with the method.

No. of Pages : 19 No. of Claims : 16

(12) PATENT APPLICATION PUBLICATION
(19) INDIA
(22) Date of filing of Application :20/09/2013
(21) Application No.8220/DELNP/2013 A
(43) Publication Date : 19/12/2014

(54) Title of the invention : WATERPROOF SOUND TRANSMITTING FILM AND ELECTRICAL PRODUCT

(51) International classification :H04R1/00
(31) Priority Document No :2011045838
(32) Priority Date :03/03/2011
(33) Name of priority country :Japan
(86) International Application No :PCT/JP2011/007005
Filing Date :15/12/2011
(87) International Publication No :WO 2012/117476
(61) Patent of Addition to Application Number :NA
Filing Date :NA
(62) Divisional to Application Number :NA
Filing Date :NA

(71)**Name of Applicant :**
1)NITTO DENKO CORPORATION
Address of Applicant :1 2 Shimohozumi 1 chome Ibaraki shi Osaka 5678680 Japan
(72)**Name of Inventor :**
1)ABE Yuichi
2)KARUBE Yuki
3)FURUYAMA Satoru

(57) Abstract :
A waterproof sound transmitting film (1) provided with: a solid resin film (2) having a plurality of penetrating holes (21); and a water repellent treatment layer (3) having openings (31) at positions corresponding to the penetrating holes (21) the layer being formed on one or both wide surfaces of the resin film (2). The air permeability of the waterproof sound transmitting film (1) is equal to or less than 100 seconds/100 mL when expressed as a Gurley number.

No. of Pages : 16 No. of Claims : 7

(12) PATENT APPLICATION PUBLICATION
(19) INDIA
(22) Date of filing of Application :24/09/2013
(21) Application No.8329/DELNP/2013 A
(43) Publication Date : 19/12/2014

(54) Title of the invention : BONDING ASSEMBLY

(51) International classification :B62D27/02,B62D29/00
(31) Priority Document No :61/453786
(32) Priority Date :17/03/2011
(33) Name of priority country :U.S.A.
(86) International Application No :PCT/US2012/029630
Filing Date :19/03/2012
(87) International Publication No :WO 2012/125995
(61) Patent of Addition to Application Number :NA
Filing Date :NA
(62) Divisional to Application Number :NA
Filing Date :NA

(71)**Name of Applicant :**
1)ZEPHYROS INC.
Address of Applicant :160 McLean Drive Romeo MI 48065 U.S.A.
(72)**Name of Inventor :**
1)RICHARDSON Henry E.
2)SHANTZ Jeffery Thomas
3)MANGIAPANE Alex

(57) Abstract :
A device and method for the protection of a first member (18} and second member (20) from corrosion by utilizing a connector (10) that bonds the members without aSlowing direct contact of the members.

No. of Pages : 19 No. of Claims : 19

(12) PATENT APPLICATION PUBLICATION
(19) INDIA
(22) Date of filing of Application :24/09/2013
(21) Application No.8330/DELNP/2013 A
(43) Publication Date : 19/12/2014

(54) Title of the invention : ADHESIVE FOR BONDING POLYIMIDE RESINS

(51) International classification :C08J5/12,C09J169/00
(31) Priority Document No :13/104877
(32) Priority Date :10/05/2011
(33) Name of priority country :U.S.A.
(86) International Application No :PCT/US2012/037337
Filing Date :10/05/2012
(87) International Publication No :WO 2012/154964
(61) Patent of Addition to Application Number :NA
Filing Date :NA
(62) Divisional to Application Number :NA
Filing Date :NA

(71)**Name of Applicant :**
1)SABIC INNOVATIVE PLASTICS IP B.V.
Address of Applicant :Plasticslaan 1 NL 4612 PX Bergen op Zoom Netherlands
(72)**Name of Inventor :**
1)TEUTSCH Erich Otto
2)MILNE Craig

(57) Abstract :
An embodiment relates to an article and a method for producing an article including a plurality of substrates and an adhesive bonded between at least two of the plurality of substrates. The adhesive can include a polycarbonate copolymer that includes reacted resorcinol siloxane and bisphenol A. Another embodiment relates to an article having a first polyimide substrate a second polyimide substrate and an adhesive bonded between the first substrate and the second substrate. The article can have a 2 minute integrated heat release rate of less than or equal to 65 kilowatt minutes per square meter (kW min/m) and a peak heat release rate of less than 65 kilowatts per square meter (kW/m) as measured using the method of FAR F25.4 in accordance with Federal Aviation Regulation FAR 25.853(d).

No. of Pages : 48 No. of Claims : 26

(12) PATENT APPLICATION PUBLICATION
(19) INDIA
(22) Date of filing of Application :24/09/2013
(21) Application No.8320/DELNP/2013 A
(43) Publication Date : 19/12/2014

(54) Title of the invention : DRY GRIND ETHANOL PRODUCTION PROCESS AND SYSTEM WITH FRONT END MILLING METHOD

(51) International classification :C12F3/10
(31) Priority Document No :61/466985
(32) Priority Date :24/03/2011
(33) Name of priority country :U.S.A.
(86) International Application No :PCT/US2012/030337
Filing Date :23/03/2012
(87) International Publication No :WO 2012/129500
(61) Patent of Addition to Application Number :NA
Filing Date :NA
(62) Divisional to Application Number :NA
Filing Date :NA

(71)**Name of Applicant :**
1)LEE TECH LLC
Address of Applicant :34125 Blue Jay Terrace Fremont CA 94555 U.S.A.
(72)**Name of Inventor :**
1)LEE Chie Ying

(57) Abstract :
A dry grind ethanol production process and system with front end milling method is provided for improving alcohol and/or by product yields such as oil and/or protein yields. In one example the process includes grinding corn kernels into particles then mixing the corn particles with a liquid to produce a slurry including oil protein starch fiber germ and grit. Thereafter the slurry is subjected to a front end milling method which includes separating the slurry into a solids portion including fiber grit and germ and a liquid portion including oil protein and starch then milling the separated solids portion to reduce the size of the germ and grit and release bound starch oil and protein from the solids portion. The starch is converted to sugar and alcohol is produced therefrom then recovered. Also the fiber can be separated and recovered. Oil and protein may be separated and recovered as well.

No. of Pages : 69 No. of Claims : 38

(12) PATENT APPLICATION PUBLICATION
(19) INDIA
(22) Date of filing of Application :24/09/2013
(21) Application No.8321/DELNP/2013 A
(43) Publication Date : 19/12/2014

(54) Title of the invention : APPARATUS FOR CONTROLLING DRILL BIT DEPTH OF CUT USING THERMALLY EXPANDABLE MATERIALS

(51) International classification :E21B10/32,E21B7/04
(31) Priority Document No :61/472887
(32) Priority Date :07/04/2011
(33) Name of priority country :U.S.A.
(86) International Application No :PCT/US2012/032266
Filing Date :05/04/2012
(87) International Publication No :WO 2012/138827
(61) Patent of Addition to Application Number :NA
Filing Date :NA
(62) Divisional to Application Number :NA
Filing Date :NA

(71)**Name of Applicant :**
1)BAKER HUGHES INCORPORATED
Address of Applicant :P.O. Box 4740 Houston Texas 77210 4740 U.S.A.
(72)**Name of Inventor :**
1)HANFORD Ryan J.

(57) Abstract :
In an aspect drill bit for use in drilling a borehole is provided that includes a body including a side face section and a passage in the body. The drill bit further includes a rubbing member disposed in the face section and configured to control a depth of cut for the drill bit wherein the rubbing member comprises a thermally responsive material in thermal communication with the passage configured to control a position of the rubbing member with respect to the face section.

No. of Pages : 15 No. of Claims : 21

(12) PATENT APPLICATION PUBLICATION
(19) INDIA
(22) Date of filing of Application :24/09/2013
(21) Application No.8323/DELNP/2013 A
(43) Publication Date : 19/12/2014

(54) Title of the invention : THIENO [2 3 D] PYRIMIDINE DERIVATIVES AND THEIR USE TO TREAT ARRHYTHMIA

(51) International classification	:C07D495/04,A61K31/495,A61P9/00
(31) Priority Document No	:1105659.5
(32) Priority Date	:01/04/2011
(33) Name of priority country	:U.K.
(86) International Application No	:PCT/GB2012/050710
Filing Date	:29/03/2012
(87) International Publication No	:WO 2012/131379
(61) Patent of Addition to Application Number	:NA
Filing Date	:NA
(62) Divisional to Application Number	:NA
Filing Date	:NA

(71)**Name of Applicant :**
1)XENTION LIMITED
Address of Applicant :Iconix Park London Road Pampisford Cambridge CB22 3EG U.K.
(72)**Name of Inventor :**
1)JOHN Derek Edward
2)FORD John

(57) Abstract :
The present invention relates to thienopyrimidine compounds which are potassium channel inhibitors. Pharmaceutical compositions comprising the compounds and their use in the treatment of arrhythmia are also described.

No. of Pages : 42 No. of Claims : 15

(12) PATENT APPLICATION PUBLICATION
(19) INDIA
(22) Date of filing of Application :24/09/2013
(21) Application No.8324/DELNP/2013 A
(43) Publication Date : 19/12/2014

(54) Title of the invention : CONTINUOUSLY VARIABLE TRANSMISSION PROVIDED WITH A ROLLER PARKING ZONE

(51) International classification :F16H15/38,F16H55/32,F16H57/04
(31) Priority Document No :61/476508
(32) Priority Date :18/04/2011
(33) Name of priority country :U.S.A.
(86) International Application No :PCT/CA2012/000273
Filing Date :26/03/2012
(87) International Publication No :WO 2012/142694
(61) Patent of Addition to Application Number :NA
Filing Date :NA
(62) Divisional to Application Number :NA
Filing Date :NA

(71)**Name of Applicant :**
1)TRANSMISSION CVTCORP INC.
Address of Applicant :2101 rue Nobel Suite N Sainte Julie Qubec J3E 1Z8 Canada
(72)**Name of Inventor :**
1)BEAUDOIN Samuel
2)MCMAHON Christian
3)OKULOV Paul

(57) Abstract :
Generally stated various embodiments described herein concern a toroidal CVT provided with parking zones where the rollers are brought when the CVT is powered down. More specifically a portion of the toroidal surfaces of the disks is reserved as a parking zone therefore preventing premature wear and/or damages to the working portion of the disks.

No. of Pages : 30 No. of Claims : 28

(12) PATENT APPLICATION PUBLICATION
(19) INDIA
(22) Date of filing of Application :24/09/2013
(21) Application No.8325/DELNP/2013 A
(43) Publication Date : 19/12/2014

(54) Title of the invention : DRIVETRAIN PROVIDED WITH A CVT

(51) International classification :F16H37/12,B60K17/06,F16H48/36
(31) Priority Document No :61/480126
(32) Priority Date :28/04/2011
(33) Name of priority country :U.S.A.
(86) International Application No :PCT/CA2012/000274
Filing Date :26/03/2012
(87) International Publication No :WO 2012/145821
(61) Patent of Addition to Application Number :NA
Filing Date :NA
(62) Divisional to Application Number :NA
Filing Date :NA

(71)**Name of Applicant :**
1)TRANSMISSION CVTCORP INC.
Address of Applicant :2101 rue Nobel Suite N Sainte Julie Qubec J3E 1Z8 Canada
(72)**Name of Inventor :**
1)MESSIER Fran§ois
2)DIONNE Jean Fran§ois
3)BEAUDOIN Samuel

(57) Abstract :
A drivetrain provided with a CVT that can be used in both CVT and Infinitely Variable Transmission (IVT) configurations and that includes a high low gear selection assembly and a power mixer is described herein. The drivetrain includes a high low gear selection mechanism that provides in combination with the CVT high and low ranges of gear ratios. The drivetrain further includes a power mixer that allows the IVT configuration for transitions between high and low configurations that are seamless to the operator.

No. of Pages : 45 No. of Claims : 17

(12) PATENT APPLICATION PUBLICATION
(19) INDIA
(22) Date of filing of Application :24/09/2013
(21) Application No.8327/DELNP/2013 A
(43) Publication Date : 19/12/2014

(54) Title of the invention : MULTI ELECTRODE ELECTROLYTIC CELL

(51) International classification :C02F1/46,C25B1/26,C25B9/20
(31) Priority Document No :2011072048
(32) Priority Date :29/03/2011
(33) Name of priority country :Japan
(86) International Application No :PCT/JP2012/056378
Filing Date :13/03/2012
(87) International Publication No :WO 2012/132873
(61) Patent of Addition to Application Number :NA
Filing Date :NA
(62) Divisional to Application Number :NA
Filing Date :NA

(71)**Name of Applicant :**
1)MORINAGA MILK INDUSTRY CO. LTD.
Address of Applicant :33 1 Shiba 5 chome Minato ku Tokyo 1088384 Japan
(72)**Name of Inventor :**
1)MATSUYAMA Koki
2)MATSUZAKI Yamato

(57) Abstract :
The invention is a bipolar-electrode electrolytic cell (1) which includes a chassis- (2), an electrode plate (3) and a plate-shape spacer (4) having a concavity (25) disposing 5 the electrode plate (3), wherein an unit cell (C), which is formed by connecting a plurality of spacers (4) in which the electrode plate (3) is disposed on the concavity (25) so that one plate surface of the electrode plate (3) is directed to one direction, is disposed inside the chassis (2). The bipolar-electrode electrolytic cell (1) includes engaged portions (35, 50 and 51) which are provided on any one of the concavity (25) of the 10 spacer (4) or the electrode plate (3) and engaging portions (10A and 10B) which are formed the other portion with respect to the one portion.

No. of Pages : 43 No. of Claims : 4

(12) PATENT APPLICATION PUBLICATION
(19) INDIA
(22) Date of filing of Application :19/09/2013
(21) Application No.8194/DELNP/2013 A
(43) Publication Date : 19/12/2014

(54) Title of the invention : BATTERY PACK

(51) International classification :H01M2/02,H01M2/10
(31) Priority Document No :2011078341
(32) Priority Date :31/03/2011
(33) Name of priority country :Japan
(86) International Application No :PCT/JP2011/005032
Filing Date :07/09/2011
(87) International Publication No :WO 2012/131802
(61) Patent of Addition to Application Number :NA
Filing Date :NA
(62) Divisional to Application Number :NA
Filing Date :NA

(71)**Name of Applicant :**
1)NEC Energy Devices Ltd.
Address of Applicant :1120 Shimokuzawa Chuo ku Sagamihara shi Kanagawa 2525298 Japan
(72)**Name of Inventor :**
1)SUZUKI Toru

(57) Abstract :
In order to provide a highly-reliable battery back in which a laminate film of a unit battery does not break through a laminate 5 film of an adjacent unit battery even under vibration, a battery pack of the present invention is characterized by including a plurality of unit batteries 100 connected in series, the unit batteries 100 including: a positive-electrode pulled-out tab 120 and a negative-electrode pulled-out tab 130; and a laminate casing 10 member that is provided with a first end portion 111, from which the positive-electrode pulled-out tab 12 0 and the negative-electrode pulled-out tab 13 0 are pulled out, a second end portion 112, which faces the first end portion 111, a first fusion-bonding portion 117, which has a first fusion-welding length 15 in a direction in which a tab is pulled out at a first end portion Ills side, a second fusion-bonding portion 118, which has a second fusion-welding length that is shorter than the first fusion-welding length in a direction in which a tab is pulled out at a second end portion 112 s side, and chamfered portions 119, which are positioned 20 at both corner portions of the second end portion 112.

No. of Pages : 79 No. of Claims : 5

(12) PATENT APPLICATION PUBLICATION
(19) INDIA
(22) Date of filing of Application :19/09/2013
(21) Application No.8195/DELNP/2013 A
(43) Publication Date : 19/12/2014

(54) Title of the invention : BATTERY PACK

(51) International classification :H01M2/10,H01M2/20
(31) Priority Document No :2011078335
(32) Priority Date :31/03/2011
(33) Name of priority country :Japan
(86) International Application No :PCT/JP2011/005031
Filing Date :07/09/2011
(87) International Publication No :WO 2012/131801
(61) Patent of Addition to Application Number :NA
Filing Date :NA
(62) Divisional to Application Number :NA
Filing Date :NA

(71)**Name of Applicant :**
1)NEC Energy Devices Ltd.
Address of Applicant :1120 Shimokuzawa Chuo ku Sagamihara shi Kanagawa 2525298 Japan
(72)**Name of Inventor :**
1)SUZUKI Toru

(57) Abstract :
In order to provide a battery pack that can be produced highly efficiently and contribute to an improvement in productivity, a battery pack of the present invention includes: a plurality of unit batteries 100 that include a positive-electrode pulled-out tab 120 and a negative-electrode pulled-out tab 130; and a board 3 00 on which pulled-out tab connection sections are formed to connect the pulled-out tabs of different polarities of adjacent unit batteries 100.

No. of Pages : 82 No. of Claims : 16

(12) PATENT APPLICATION PUBLICATION
(19) INDIA
(22) Date of filing of Application :19/09/2013
(21) Application No.8196/DELNP/2013 A
(43) Publication Date : 19/12/2014

(54) Title of the invention : BATTERY PACK AND ELECTRIC BICYCLE

(51) International classification :H01M2/10,B62J11/00,B62M6/40
(31) Priority Document No :2011078301
(32) Priority Date :31/03/2011
(33) Name of priority country :Japan
(86) International Application No :PCT/JP2011/005029
Filing Date :07/09/2011
(87) International Publication No :WO 2012/131799
(61) Patent of Addition to Application Number :NA
Filing Date :NA
(62) Divisional to Application Number :NA
Filing Date :NA

(71)**Name of Applicant :**
1)NEC Energy Devices Ltd.
Address of Applicant :1120 Shimokuzawa Chuo ku Sagamihara shi Kanagawa 2525298 Japan
(72)**Name of Inventor :**
1)SUZUKI Toru

(57) Abstract :
To provide a battery pack that is less likely to be affected by vibrations, shocks and the like and has a stable characteristic, and an electric bicycle that uses the battery pack. A battery pack includes: battery connecting structures in which a plurality of flat batteries is placed; cushioning members that are disposed in two directions, which cross each other at right angles, of outer surfaces of the battery connecting structures; and a housing section that houses the battery connecting structures in such a way that clearance between outer surfaces of the cushioning members of one direction is positive, and that clearance between outer surfaces of the cushioning members of the other direction is negative.

No. of Pages : 68 No. of Claims : 9

(12) PATENT APPLICATION PUBLICATION
(19) INDIA
(22) Date of filing of Application :19/09/2013
(21) Application No.8197/DELNP/2013 A
(43) Publication Date : 19/12/2014

(54) Title of the invention : BATTERY PACK

(51) International classification :H01M2/10
(31) Priority Document No :2011078342
(32) Priority Date :31/03/2011
(33) Name of priority country :Japan
(86) International Application No :PCT/JP2011/005033
Filing Date :07/09/2011
(87) International Publication No :WO 2012/131803
(61) Patent of Addition to Application Number :NA
Filing Date :NA
(62) Divisional to Application Number :NA
Filing Date :NA

(71)**Name of Applicant :**
1)NEC Energy Devices Ltd.
Address of Applicant :1120 Shimokuzawa Chuo ku Sagamihara shi Kanagawa 2525298 Japan
(72)**Name of Inventor :**
1)SUZUKI Toru

(57) Abstract :
In order to provide a highly-reliable battery pack that has 5 resistance to vibration, a battery pack of the present invention is characterized by including a plurality of unit batteries 100 stacked and bonded together with a two-sided adhesive tape 460, the unit batteries 100 including a laminate film casing material by which an electrode laminated body that includes a sheet positive 10 electrode, a sheet negative electrode, and a separator, and an electrolytic solution are sealed, wherein a total outer circumference length of the two-sided adhesive tape 460 is longer than an outer circumference length of an electrode laminated area 105 that is an area corresponding to a location where the electrode 15 laminated body is stored in the laminate film casing material.

No. of Pages : 77 No. of Claims : 1

(12) PATENT APPLICATION PUBLICATION
(19) INDIA
(22) Date of filing of Application :24/09/2013
(21) Application No.8317/DELNP/2013 A
(43) Publication Date : 19/12/2014

(54) Title of the invention : FRACTURE FIXATION SYSTEMS HAVING INTRAMEDULLARY SUPPORT

(51) International classification :A61F2/28,A61L27/56,A61L27/14
(31) Priority Document No :61/468991
(32) Priority Date :29/03/2011
(33) Name of priority country :U.S.A.
(86) International Application No :PCT/US2012/030947
Filing Date :28/03/2012
(87) International Publication No :WO 2012/135344
(61) Patent of Addition to Application Number :NA
Filing Date :NA
(62) Divisional to Application Number :NA
Filing Date :NA

(71)**Name of Applicant :**
1)SMITH & NEPHEW INC.
Address of Applicant :1450 Brooks Road Memphis TN 38116 U.S.A.
(72)**Name of Inventor :**
1)ROSE John
2)RAINS James K.
3)PATTERSON William D.
4)LEWIS Mark T.
5)AUSTIN Gene E.

(57) Abstract :
Orthopedic fracture repair implants systems and methods are disclosed. Implants include one or more of biocompatible sleeves and struts. The implants systems and methods are applied to bone fractures such as segmentation fractures.

No. of Pages : 77 No. of Claims : 94

(12) PATENT APPLICATION PUBLICATION
(19) INDIA
(22) Date of filing of Application :24/09/2013
(21) Application No.8318/DELNP/2013 A
(43) Publication Date : 19/12/2014

(54) Title of the invention : BATTERY DEVICE

(51) International classification :H02J7/02,H01M10/48,H02J7/00
(31) Priority Document No :2011116958
(32) Priority Date :25/05/2011
(33) Name of priority country :Japan
(86) International Application No :PCT/JP2012/063036
Filing Date :22/05/2012
(87) International Publication No:WO 2012/161186
(61) Patent of Addition to Application Number :NA
Filing Date :NA
(62) Divisional to Application Number :NA
Filing Date :NA

(71)**Name of Applicant :**
1)NEC ENERGY DEVICES LTD.
Address of Applicant :1120 Shimokuzawa Chuo ku Sagamihara shi Kanagawa 2525298 Japan
(72)**Name of Inventor :**
1)HORI Yuuki
2)SUZUKI Shin

(57) Abstract :
A voltage measurement unit (200) measures the voltage value between both ends of each of batteries (101 -1) to (101 -n). A control unit (3 00) determines whether or not the batteries (101-1) to (101-n) are defective based on the measured voltage values, outputs the series voltage 5 of batteries (101 -1) to (101 -n) as the output voltage of a series body (100-1) if there is no battery, from among the batteries (101-1) to (101-n), that is determined to be defective, and outputs the boosted voltage from the voltage of the batteries (101-1) to (101-n) other than the battery that was determined to be defective as the output voltage of the series body (100-1).

No. of Pages : 29 No. of Claims : 13

(12) PATENT APPLICATION PUBLICATION
(19) INDIA
(22) Date of filing of Application :24/09/2013
(21) Application No.8319/DELNP/2013 A
(43) Publication Date : 19/12/2014

(54) Title of the invention : LIPID BASED NANOPARTICLES

(51) International classification :A61K49/00,A61K49/04,A61K49/18
(31) Priority Document No :61/472605
(32) Priority Date :06/04/2011
(33) Name of priority country :U.S.A.
(86) International Application No :PCT/US2012/032649
Filing Date :06/04/2012
(87) International Publication No :WO 2012/139080
(61) Patent of Addition to Application Number :NA
Filing Date :NA
(62) Divisional to Application Number :NA
Filing Date :NA

(71)**Name of Applicant :**
1)BOARD OF REGENTS OF THE UNIVERSITY OF TEXAS SYSTEM
Address of Applicant :201 West 7th Street Austin TX 78701 U.S.A.
2)Alzeca Biosciences LLC
3)Board Of Regents of the University of Houston System
4)Texas Childrens Hospital
(72)**Name of Inventor :**
1)ANNAPRAGADA Ananth
2)ERIKSEN Jason L.
3)TANIFUM Eric A.
4)DASGUPTA Indrani
5)COOK Stephen C.

(57) Abstract :
Lipid based nanoparticle compositions are provided. The compositions generally comprise lipid hydrophilic polymer amyloid binding ligand conjugates and may be liposomal compositions. The compositions including the liposomal compositions may be useful for imaging and/or the treatment of amyloid plaque deposits characteristic of Alzheimer s Disease.

No. of Pages : 64 No. of Claims : 22

(12) PATENT APPLICATION PUBLICATION
(19) INDIA
(22) Date of filing of Application :24/09/2013
(21) Application No.8333/DELNP/2013 A
(43) Publication Date : 19/12/2014

(54) Title of the invention : SYSTEM AND METHOD FOR PROVIDING WATER PARK BEACH VISUAL EFFECTS

(51) International classification :A63G31/00,E04H4/00
(31) Priority Document No :13/083280
(32) Priority Date :08/04/2011
(33) Name of priority country :U.S.A.
(86) International Application No :PCT/US2012/031277
Filing Date :29/03/2012
(87) International Publication No :WO 2012/138547
(61) Patent of Addition to Application Number :NA
Filing Date :NA
(62) Divisional to Application Number :NA
Filing Date :NA

(71)**Name of Applicant :**
1)UNIVERSAL CITY STUDIOS LLC
Address of Applicant :100 Universal City Plaza Universal City California 91608 U.S.A.
(72)**Name of Inventor :**
1)OSTERMAN Ross Alan
2)SCHWARTZ Justin Michael

(57) Abstract :
Present embodiments are directed to features for maintaining or providing a beach area (10 100) that is adjacent a water feature (12 30) and that includes beach surface material (20 110) disposed in one or more containment structures (16) such that a multi colored or illuminated beach surface is provided. Present embodiments may include multiple containment structures (16) arrayed in an area (10 100) adjacent a water feature (12 30) wherein each containment structure holds beach surface material (20 110) of a different color. Further present embodiments may include creating and/or distributing iridescent and/or phosphorescent beach surface material (20 110) in one or more containment structures (16) that define the beach area (10 100). Additionally present embodiments may include adjustable or attachable barrier extensions (42) to facilitate maintenance. Further present embodiments may include transparent or translucent beach surface material (20 110) disposed in one or more containment structures (16) and a lighting system (106 206) under the beach surface materials.

No. of Pages : 24 No. of Claims : 23

(12) PATENT APPLICATION PUBLICATION
(19) INDIA
(22) Date of filing of Application :24/09/2013
(21) Application No.8334/DELNP/2013 A
(43) Publication Date : 19/12/2014

(54) Title of the invention : ARTICULATED WATERSLIDE

(51) International classification :A63G21/18
(31) Priority Document No :13/083297
(32) Priority Date :08/04/2011
(33) Name of priority country :U.S.A.
(86) International Application No :PCT/US2012/031278
Filing Date :29/03/2012
(87) International Publication No :WO 2012/138548
(61) Patent of Addition to Application Number :NA
Filing Date :NA
(62) Divisional to Application Number :NA
Filing Date :NA

(71)**Name of Applicant :**
1)UNIVERSAL CITY STUDIOS LLC
Address of Applicant :100 Universal City Plaza Universal City California 91608 U.S.A.
(72)**Name of Inventor :**
1)OSTERMAN Ross Alan
2)SCHWARTZ Justin Michael

(57) Abstract :
Present embodiments are directed to systems and methods for providing an articulated waterslide. An articulate waterslide is capable of being maneuvered during operation to change flow paths of the waterslide. Specifically an embodiment includes a waterslide with a chute configured to facilitate water flow along the chute and configured to transport a patron an adjustable joint (76) positioned along the chute and an actuator (78) configured to manipulate the adjustable joint such that a flow path of the chute is changeable.

No. of Pages : 27 No. of Claims : 22

(12) PATENT APPLICATION PUBLICATION
(19) INDIA
(22) Date of filing of Application :23/09/2013
(21) Application No.8261/DELNP/2013 A
(43) Publication Date : 19/12/2014

(54) Title of the invention : GREASE COMPOSITION AND GREASE PACKED ROLLING BEARING

(51) International classification :C10M169/00,F16C19/06,F16C33/44
(31) Priority Document No :2011047242
(32) Priority Date :04/03/2011
(33) Name of priority country :Japan
(86) International Application No :PCT/JP2012/055569
Filing Date :05/03/2012
(87) International Publication No :WO 2012/121212
(61) Patent of Addition to Application Number :NA
Filing Date :NA
(62) Divisional to Application Number :NA
Filing Date :NA

(71)**Name of Applicant :**
1)KYODO YUSHI CO. LTD.
Address of Applicant :2 30 Tsujido Kandai 2 chome Fujisawa shi Kanagawa 2518588 Japan
2)NTN CORPORATION
(72)**Name of Inventor :**
1)AIDA Ryo
2)IMAI Yutaka
3)SAKAGUCHI Kenta

(57) Abstract :
The invention provides a grease composition for a rolling bearing for a mmor to support a rotor of the motor, containing a pentaerythritol ester base oil with a kinematic viscosity at 40°C of 20 to 55 mm2/s; 7 to 13 mass% of a diurea thickener represented by 5 formula (A) where R2 is a bivalent aromatic hydrocarbon group having 6 to 15 carbon atoms; and R1 and R3 each represents a cyclohexyl group or a straight-chain or branched alkyl group having 16 to 20 carbon atoms, with the ratio of the number of moles of the cyclohexyl group to the total number of moles of the cyclohexyl group and the straight-chain or branched alkyl group having 16 to 20 carbon atoms, as expressed by 10 [((the number of cyclohexyl groups) / (the number of cyclohexyl groups + the number of straight-chain or branched Ci6-2o alkyl groups)) x 100] being 60 to 90 mol%; and a rust inhibitor mixture selected from the group consisting of polyol ester type rust inhibitors and organic sulfonate type rust inhibitors. The grease composition of the invention can prevent a peculiar noise from being produced at low temperatures, satisfy 15 the low torque performance over a wide temperature range, extend the bearing lubrication life even under the circumstances of high temperature, and exhibit excellent rust inhibiting effect on varnish.

No. of Pages : 27 No. of Claims : 7

(12) PATENT APPLICATION PUBLICATION
(19) INDIA
(22) Date of filing of Application :23/09/2013
(21) Application No.8262/DELNP/2013 A
(43) Publication Date : 19/12/2014

(54) Title of the invention : RECEIVER APPARATUS RECEPTION METHOD PROGRAM AND RECEPTION SYSTEM

(51) International classification :H04J11/00,H04N7/173
(31) Priority Document No :2011078873
(32) Priority Date :31/03/2011
(33) Name of priority country :Japan
(86) International Application No :PCT/JP2012/057529
Filing Date :23/03/2012
(87) International Publication No :WO 2012/133194
(61) Patent of Addition to Application Number :NA
Filing Date :NA
(62) Divisional to Application Number :NA
Filing Date :NA

(71)**Name of Applicant :**
1)SONY CORPORATION
Address of Applicant :1 7 1 Konan Minato ku Tokyo 1080075 Japan
(72)**Name of Inventor :**
1)YOKOKAWA Takashi
2)YOSHIMOCHI Naoki
3)SAKAI Hitoshi

(57) Abstract :
The present technique relates to a reception apparatus, a reception method, a program, and a reception system capable of starting decoding of data in a short 5 time. A reception apparatus according to an aspect of the present technique includes a demodulation unit configured to demodulate a modulated signal used to transmit transmission control information about data and the data to be transmitted, a first decoding unit 10 configured to decode the transmission control information obtained by demodulation performed with the demodulation unit, a storage unit configured to store the data obtained by demodulation performed with the demodulation unit, and a second decoding unit configured to decode the 15 data stored in the storage unit on the basis of the transmission control information decoded by the first decoding unit. The present technique can be applied to a receiver receiving an OFDM signal of DVB-C2.

No. of Pages : 43 No. of Claims : 7

(12) PATENT APPLICATION PUBLICATION
(19) INDIA
(22) Date of filing of Application :23/09/2013
(21) Application No.8263/DELNP/2013 A
(43) Publication Date : 19/12/2014

(54) Title of the invention : ADJUSTABLE CANNULA

(51) International classification :A61B17/34
(31) Priority Document No :13/072329
(32) Priority Date :25/03/2011
(33) Name of priority country :U.S.A.
(86) International Application No :PCT/US2012/029923
Filing Date :21/03/2012
(87) International Publication No :WO 2012/134912
(61) Patent of Addition to Application Number :NA
Filing Date :NA
(62) Divisional to Application Number :NA
Filing Date :NA

(71)**Name of Applicant :**
1)SMITH & NEPHEW INC.
Address of Applicant :1450 Brooks Road Memphis Tennessee 38116 Ukraine
(72)**Name of Inventor :**
1)SALVAS Paul L.
2)LUNN Richard M.

(57) Abstract :
A cannula having a tubular body having a proximal end and a distal end and a central axis defined therethrough a first protruding member coupled to a first region of the tubular body and a second protruding member coupled to a second region of the tubular body. Further the tubular body has a bore formed therethrough. Each of the first protruding member and the second protruding member are coupled to an outer surface of the tubular body. Finally a length of the tubular is adjustable along the central axis.

No. of Pages : 22 No. of Claims : 20

(12) PATENT APPLICATION PUBLICATION
(19) INDIA
(22) Date of filing of Application :24/09/2013
(21) Application No.8342/DELNP/2013 A
(43) Publication Date : 19/12/2014

(54) Title of the invention : CONTROL OF LIQUID FLOW SEQUENCE ON MICROFLUIDIC DEVICE

(51) International classification :B01L3/00
(31) Priority Document No :105583
(32) Priority Date :24/03/2011
(33) Name of priority country :Portugal
(86) International Application No :PCT/IB2012/051411
Filing Date :23/03/2012
(87) International Publication No :WO 2012/131556
(61) Patent of Addition to Application Number :NA
Filing Date :NA
(62) Divisional to Application Number :NA
Filing Date :NA

(71)**Name of Applicant :**
1)BIOSURFIT S.A.
Address of Applicant :Centro Empresarial de Aveiro P 3811 501 Aveiro Portugal
(72)**Name of Inventor :**
1)GARCIA DA FONSECA Jo£o
2)REIS Nuno
3)TENREIRO Tnia
4)PINTO BORDEIRA Sandro Miguel

(57) Abstract :
Described embodiments provide devices systems and methods for sequencing liquid flow in response to a driving force by entrapping and releasing gas between volumes of liquid in a controlled manner. In one particular form a centrifugal lab on a disk device is provided to drive liquid flow and sequencing by virtue of the centrifugal force and in one particular form a radially inward bend conduit is used in connection with controllably trapping and releasing gas between liquid volumes.

No. of Pages : 35 No. of Claims : 15

(12) PATENT APPLICATION PUBLICATION
(19) INDIA
(22) Date of filing of Application :23/09/2013
(21) Application No.8266/DELNP/2013 A
(43) Publication Date : 19/12/2014

(54) Title of the invention : ENCODING APPARATUS AND METHOD AND PROGRAM

(51) International classification :G10L19/02,G10L21/04
(31) Priority Document No :2011078874
(32) Priority Date :31/03/2011
(33) Name of priority country :Japan
(86) International Application No :PCT/JP2012/057530
Filing Date :23/03/2012
(87) International Publication No :WO 2012/133195
(61) Patent of Addition to Application Number :NA
Filing Date :NA
(62) Divisional to Application Number :NA
Filing Date :NA

(71)**Name of Applicant :**
1)SONY CORPORATION
Address of Applicant :1 7 1 Konan Minato ku Tokyo 1080075 Japan
(72)**Name of Inventor :**
1)HONMA Hiroyuki
2)CHINEN Toru
3)YAMAMOTO Yuki
4)HATANAKA Mitsuyuki

(57) Abstract :
This technology relates to an encoding device, an encoding method, and a program capable of improving audio quality and more efficiently encoding audio. A first 5 high-frequency encoding circuit encodes a high-frequency range based on a low-frequency subband signal and a highfrequency subband signal and obtains a high-frequency code amount. A low-frequency encoding circuit encodes a low-frequency signal with a code amount determined by the 10 high-frequency code amount and a low-frequency decoding circuit decodes the encoded low-frequency signal. A subband dividing circuit divides a decoded low-frequency signal obtained by decoding into decoded low-frequency subband signals of a plurality of subbands and a second 15 high-frequency encoding circuit generates a highfrequency code string such that a code amount of the high-frequency code string for obtaining a high-frequency component is not larger than the high-frequency code amount based on the decoded low-frequency subband signals 20 and the high-frequency subband signals. The present invention is applicable to the encoding device.

No. of Pages : 52 No. of Claims : 7

(12) PATENT APPLICATION PUBLICATION
(19) INDIA
(22) Date of filing of Application :23/09/2013

(21) Application No.8267/DELNP/2013 A
(43) Publication Date : 19/12/2014

(54) Title of the invention : I/O DEVICE

(51) International classification :H04B1/18,H01Q1/44,H04M1/02
(31) Priority Document No :2011075325
(32) Priority Date :30/03/2011
(33) Name of priority country :Japan
(86) International Application No :PCT/JP2012/057115
Filing Date :21/03/2012
(87) International Publication No :WO 2012/133023
(61) Patent of Addition to Application Number :NA
Filing Date :NA
(62) Divisional to Application Number :NA
Filing Date :NA

(71)**Name of Applicant :**
1)SONY CORPORATION
Address of Applicant :1 7 1 Konan Minato ku Tokyo 1080075 Japan
(72)**Name of Inventor :**
1)YOSHINO Yoshitaka
2)TSUBOI Satoru
3)IMAI Tadashi
4)ISHIZUKA Akira

(57) Abstract :
There is provided an input/output apparatus. Among information terminals of an input/output connector provided in an information terminal device, at least one information terminal of information terminals to switch an internal operation of the information terminal device is used also as an antenna input terminal.

No. of Pages : 46 No. of Claims : 18

(12) PATENT APPLICATION PUBLICATION
(19) INDIA
(22) Date of filing of Application :23/09/2013
(21) Application No.8269/DELNP/2013 A
(43) Publication Date : 19/12/2014

(54) Title of the invention : METHOD FOR PRODUCING ORGANIC TRANSISTOR ORGANIC TRANSISTOR METHOD FOR PRODUCING SEMICONDUCTOR DEVICE SEMICONDUCTOR DEVICE AND ELECTRONIC APPARATUS

(51) International classification :H01L21/336,C07D493/06,H01L29/786
(31) Priority Document No :2011075180
(32) Priority Date :30/03/2011
(33) Name of priority country :Japan
(86) International Application No :PCT/JP2012/054447
Filing Date :23/02/2012
(87) International Publication No :WO 2012/132674
(61) Patent of Addition to Application Number :NA
Filing Date :NA
(62) Divisional to Application Number :NA
Filing Date :NA

(71)**Name of Applicant :**
1)SONY CORPORATION
Address of Applicant :1 7 1 Konan Minato ku Tokyo 1080075 Japan
(72)**Name of Inventor :**
1)KOBAYASHI Norihito

(57) Abstract :
To provide: an organic transistor able to obtain a sufficiently high carrier mobility; and a method for producing the transistor. [Solution] By means of applying a solution containing a polymer and a compound represented by general formula (1) onto a gate electrode provided on a substrate a gate insulating film comprising the polymer and an organic semiconductor film that comprises the compound and is on the gate insulating film are formed en bloc. (Here R is hydrogen or an alkyl group.)

No. of Pages : 55 No. of Claims : 12

(12) PATENT APPLICATION PUBLICATION
(19) INDIA
(22) Date of filing of Application :25/09/2013
(21) Application No.8347/DELNP/2013 A
(43) Publication Date : 19/12/2014

(54) Title of the invention : DEVICE FOR TRANSFERRING VEHICLE WHEELS

(51) International classification :B65G47/84,B65G47/52
(31) Priority Document No :10 2011 100 828.8
(32) Priority Date :07/05/2011
(33) Name of priority country :Germany
(86) International Application No :PCT/EP2012/001916
Filing Date :04/05/2012
(87) International Publication No :WO 2012/152416
(61) Patent of Addition to Application Number :NA
Filing Date :NA
(62) Divisional to Application Number :NA
Filing Date :NA

(71)**Name of Applicant :**
1)EISENMANN AG
Address of Applicant :T¼binger Str. 81 71032 Bblingen Germany
(72)**Name of Inventor :**
1)STARZ Reiner
2)HOFBAUER Ulrich

(57) Abstract :
In a device for transferring vehicle wheels, an individual vehicle wheel (14) can be gripped by a gripping module (40, 42) comprising at least one gripping unit (78, 80) which is supported by a frame structure (72) and includes multiple pressing elements (92) that can be pressed against one or more mating surfaces (94) of an individual vehicle wheel (14). A first gripping module (40) and a second gripping module (42) are mounted on a common rigid support structure (44) which can be rotated about a main axis of rotation (62) by means of a rotating mechanism (48, 52, 64, 68). Furthermore, translating means (68; 88, 90; 96, 98) are provided which allow the pressing elements (92) to be moved with a movement component running parallel to the main axis of rotation (62).

No. of Pages : 33 No. of Claims : 10

(12) PATENT APPLICATION PUBLICATION
(19) INDIA
(22) Date of filing of Application :25/09/2013
(21) Application No.8348/DELNP/2013 A
(43) Publication Date : 19/12/2014

(54) Title of the invention : UNDERWATER VEHICLE COMPRISING AN ELECTROLYTICALLY ACTIVATED ELECTROCHEMICAL BATTERY

(51) International classification :H01M2/40,H01M6/34,F04D29/44
(31) Priority Document No :11 01191
(32) Priority Date :15/04/2011
(33) Name of priority country :France
(86) International Application No :PCT/EP2012/056826
Filing Date :13/04/2012
(87) International Publication No :WO 2012/140227
(61) Patent of Addition to Application Number :NA
Filing Date :NA
(62) Divisional to Application Number :NA
Filing Date :NA

(71)**Name of Applicant :**
1)DCNS
Address of Applicant :40 42 rue du Docteur Finlay F 75015 Paris France
(72)**Name of Inventor :**
1)GERLIER Fran§ois
2)SENEZ Thomas
3)LEMASQUERIER Alexandre

(57) Abstract :
This underwater vehicle includes an electrolyte-activated electrochemical fuel cell to supply it with electrical power, which fuel cell includes: - an electrochemical power production cell (3), - a reservoir (4) to contain the electrolyte. - means of circulation (7) of the electrolyte between the electrochemical cell (3) and the reservoir (4), comprising a semi-axial flow pump arranged axially in the reservoir and comprising a motorised wheel rotatably mounted in a diffuser, characterised in that the diffuser has the general shape of a dome to direct the flow of the electrolyte coming out of the pump in a direction substantially parallel to the axis of the pump, and thus of the reservoir.

No. of Pages : 9 No. of Claims : 5

(12) PATENT APPLICATION PUBLICATION
(19) INDIA
(22) Date of filing of Application :24/09/2013
(21) Application No.8328/DELNP/2013 A
(43) Publication Date : 19/12/2014

(54) Title of the invention : STEERING DEVICE FOR ARTICULATED VEHICLE

(51) International classification :B62D12/00,B62D53/02,B62D55/065
(31) Priority Document No :11502572
(32) Priority Date :23/03/2011
(33) Name of priority country :Sweden
(86) International Application No :PCT/SE2012/050301
Filing Date :19/03/2012
(87) International Publication No :WO 2012/128706
(61) Patent of Addition to Application Number :NA
Filing Date :NA
(62) Divisional to Application Number :NA
Filing Date :NA

(71)**Name of Applicant :**
1)BAE SYSTEMS H„GGLUNDS AKTIEBOLAG
Address of Applicant :S 891 82 –rnskldsvik Sweden
(72)**Name of Inventor :**
1)THOR‰N Max
2)CARLSSON Martin

(57) Abstract :
The present invention relates to a steering device (I) comprising a steering member (10) for mutually steering a first vehicle unit (2) and a second vehicle unit (3) of an articulated vehicle (1) comprising means (30 32) for mutually pivoting said vehicle units wherein the steering device comprises a housing configuration (50) arranged to form a supply space between said vehicle units (2 3) comprising means (5 6 8 S; 60 62 A O) arranged for removal of stuff in the supply space (S) incoming from the surrounding. The invention also relates to an articulated vehicle with a steering member.

No. of Pages : 25 No. of Claims : 14

(12) PATENT APPLICATION PUBLICATION
(19) INDIA
(22) Date of filing of Application :25/09/2013
(21) Application No.8352/DELNP/2013 A
(43) Publication Date : 19/12/2014

(54) Title of the invention : IMMUNOASSAY PRODUCT AND PROCESS

(51) International classification :G01N31/22
(31) Priority Document No :61/484701
(32) Priority Date :11/05/2011
(33) Name of priority country :U.S.A.
(86) International Application No :PCT/US2012/037211
Filing Date :10/05/2012
(87) International Publication No :WO 2012/154905
(61) Patent of Addition to Application Number :NA
Filing Date :NA
(62) Divisional to Application Number :NA
Filing Date :NA

(71)**Name of Applicant :**
1)EMD MILLIPORE CORPORATION
Address of Applicant :290 Concord Road Billerica Massachusetts 01821 U.S.A.
(72)**Name of Inventor :**
1)SCOTT Chris
2)CLARK Phillip
3)GREENIZEN Kurt E.
4)AMARA Ryan A.
5)COLONNA Robert

(57) Abstract :
The embodiments disclosed herein are directed to an apparatus useful in conducting detection of compounds on blotting membranes. The device is comprised of several layers including a porous support layer below the blotting membrane(s) a flow distributor above the blotting membrane(s) and optionally a well on the flow distributor to contain the liquid to the desired area and to allow for lower starting volumes of such liquid. Preferably the flow distributor is a non binding or low binding hydrophilic porous membrane such as a 0.22 micron membrane and the support layer is a grid or sintered porous material. The distributor and support are held together to form an envelope around the membrane(s). The use of a hinge clips and other such devices is preferred in doing so.

No. of Pages : 39 No. of Claims : 29

(12) PATENT APPLICATION PUBLICATION
(19) INDIA
(22) Date of filing of Application :25/09/2013
(21) Application No.8353/DELNP/2013 A
(43) Publication Date : 19/12/2014

(54) Title of the invention : STEEL SHEET FOR HOT STAMPED MEMBER AND PROCESS FOR PRODUCING SAME

(51) International classification :C22C38/00,C21D1/18,C21D9/00
(31) Priority Document No :2011060893
(32) Priority Date :18/03/2011
(33) Name of priority country :Japan
(86) International Application No :PCT/JP2012/056917
Filing Date :16/03/2012
(87) International Publication No :WO 2012/128225
(61) Patent of Addition to Application Number :NA
Filing Date :NA
(62) Divisional to Application Number :NA
Filing Date :NA

(71)**Name of Applicant :**
1)NIPPON STEEL & SUMITOMO METAL CORPORATION
Address of Applicant :6 1 Marunouchi 2 chome Chiyoda ku Tokyo 1008071 Japan
(72)**Name of Inventor :**
1)TANAHASHI Hiroyuki
2)MAKI Jun

(57) Abstract :
A steel sheet for obtaining a member which is excellent in fatigue characteristics equal to ordinary 5 high strength steel sheet of the same strength even if applying the hot stamping process and a method of production of the same are provided. Steel sheet for a hot stamped member which includes composition which contains, by mass%, C: 0.15 to 0.35%, 10 Si: 0.01 to 1.0%, Mn: 0.3 to 2.3%, Al: 0.01 to 0.5%, and a balance of Fe and unavoidable impurities, and limit the impurities to P: 0.03% or less, S: 0.02% or less, and N: 0.1% or less, wherein that a standard error of Vickers hardness at a position of 20 |4m from the 15 steel sheet surface in the sheet thickness direction is 20 or less. This steel sheet is produced by a recrystallizationannealing step of a first stage of heating a cold rolled steel sheet, which is obtained by hot rolling steel 20 containing the above composition and then cold rolling it, by an average heating rate of 8 to 25°C/sec from room temperature to 600 to 700°C, then a second stage of heating by an average heating rate of 1 to 7°C/sec to 720 to 820°C.

No. of Pages : 43 No. of Claims : 9

(12) PATENT APPLICATION PUBLICATION
(19) INDIA
(22) Date of filing of Application :25/09/2013
(21) Application No.8354/DELNP/2013 A
(43) Publication Date : 19/12/2014

(54) Title of the invention : SUBMERSIBLE INCLUDING AN ELECTROCHEMICAL BATTERY

(51) International classification :H01M2/40,H01M6/34,F04D1/04
(31) Priority Document No :11 01192
(32) Priority Date :15/04/2011
(33) Name of priority country :France
(86) International Application No :PCT/EP2012/056824
Filing Date :13/04/2012
(87) International Publication No :WO 2012/140225
(61) Patent of Addition to Application Number :NA
Filing Date :NA
(62) Divisional to Application Number :NA
Filing Date :NA

(71)**Name of Applicant :**
1)DCNS
Address of Applicant :40 42 rue du Docteur Finlay F 75015 Paris France
(72)**Name of Inventor :**
1)GERLIER Fran§ois
2)SENEZ Thomas
3)LEMASQUERIER Alexandre

(57) Abstract :
The submersible according to the invention comprising an electrochemical battery activated by an electrolyte, designed to produce the electrical power for powering said submersible, the electrochemical battery comprising: - an electrochemical cell (3) for producing electrical power, - a tank (4) for containing the electrolyte, 10 - means (7) for reducing the flow of the electrolyte between the electrochemical cell (3) and the tank (4), said flow-inducing means including an axial flow pump axially arranged in the tank and including a motor-driven wheel rotatably mounted in a diffuser, is characterized in that the wheel of the pump is not asymmetric.

No. of Pages : 9 No. of Claims : 5

(12) PATENT APPLICATION PUBLICATION
(19) INDIA
(22) Date of filing of Application :25/09/2013
(21) Application No.8343/DELNP/2013 A
(43) Publication Date : 19/12/2014

(54) Title of the invention : METHOD OF DYNAMIC SEISMIC PROSPECTING

(51) International classification :G01V1/28
(31) Priority Document No :NA
(32) Priority Date :NA
(33) Name of priority country :NA
(86) International Application No :PCT/PE2011/000004
Filing Date :25/02/2011
(87) International Publication No :WO 2012/115529
(61) Patent of Addition to Application Number :NA
Filing Date :NA
(62) Divisional to Application Number :NA
Filing Date :NA

(71)**Name of Applicant :**
1)CUADRA CANALES Francisco
Address of Applicant :Calle Fra Anglico 325 San Borja Lima 41 PERU
2)ALVAREZ LOPEZ Jos Gabriel
(72)**Name of Inventor :**
1)CUADRA CANALES Francisco
2)ALVAREZ LOPEZ Jos Gabriel

(57) Abstract :
The METHOD OF DYNAMIC SEISMIC PROSPECTING , is a technological innovation applied to Seismic Prospecting in oil and/or natural gas exploration, based 5 on changes in the conception and treatment of the behavior of the reflections of the seismic or sonic waves in the geological layers of the subsoil, in accordance with Fresnels theory, in order to improve the current methodology and overcome the problems and limitations thereof. The method includes two novel aspects; 10 The acquisition of field seismic data uses 2D and 3D seismic meshes and lines having a lower density of shot points and geophones, as a function of Fresnel diameters, resulting in substantial savings of time and cost in seismic exploration. When reprocessing seismic data, the seismic images or sections obtained through a 15 conventional method are subjected to a process that corrects the deformations or distortions not resolved by current conventional methods. To that end, a geometric process is used that makes it possible to obtain an image closer to the true configuration of the geological structure being studied, avoiding errors in the location of geological faults, in drilling dry wells, or non-detected structures of lesser range, 20 etc. and thus avoiding financial losses and losses from natural resources not being exploited owing to deposits being needlessly abandoned

No. of Pages : 26 No. of Claims : 10

(12) PATENT APPLICATION PUBLICATION
(19) INDIA
(22) Date of filing of Application :25/09/2013
(21) Application No.8345/DELNP/2013 A
(43) Publication Date : 19/12/2014

(54) Title of the invention : LIQUID FOAM PRODUCTION METHOD AND APPARATUS

(51) International classification :B01F3/04,A61D1/02,B05B11/00
(31) Priority Document No :2011900768
(32) Priority Date :04/03/2011
(33) Name of priority country :Australia
(86) International Application No :PCT/AU2012/000224
Filing Date :05/03/2012
(87) International Publication No :WO 2012/119193
(61) Patent of Addition to Application Number :NA
Filing Date :NA
(62) Divisional to Application Number :NA
Filing Date :NA

(71)**Name of Applicant :**
1)PODMAJERSKY Karl
Address of Applicant :1308 Currumbin Creek Road Currumbin Queensland 4223 Australia
(72)**Name of Inventor :**
1)PODMAJERSKY Karl

(57) Abstract :
This invention relates to a method and apparatus for producing liquid foam wherein the liquid foam is used to facilitate the delivery of nutrients to plants. The method and apparatus comprises a foam production unit (1) comprising a chamber (5) inlet means (8 9) to said chamber (5) for oxygenated air and liquid and means for controlling the flow of said oxygenated air and liquid through or from said chamber (5) to thereby create a liquid foam.

No. of Pages : 53 No. of Claims : 53

(12) PATENT APPLICATION PUBLICATION
(19) INDIA
(22) Date of filing of Application :25/09/2013
(21) Application No.8361/DELNP/2013 A
(43) Publication Date : 19/12/2014

(54) Title of the invention : WEATHER RESISTANT EXTERIOR FILM COMPOSITE

(51) International classification :C08J7/04,C08J5/18,B32B27/18
(31) Priority Document No :61/479531
(32) Priority Date :27/04/2011
(33) Name of priority country :U.S.A.
(86) International Application No :PCT/US2012/031520
Filing Date :30/03/2012
(87) International Publication No :WO 2012/148630
(61) Patent of Addition to Application Number :NA
Filing Date :NA
(62) Divisional to Application Number :NA
Filing Date :NA

(71)**Name of Applicant :**
1)CPFILMS INC.
Address of Applicant :4210 The Great Road Fieldale VA 24089 U.S.A.
(72)**Name of Inventor :**
1)PORT Anthony B.
2)PICKETT Scott E.
3)BARTH Steven A.

(57) Abstract :
This invention relates to film composites with a single coating of hard coat material which have a significant improved adhesion together with improved weather resistance while also increasing resistance to abrasion and cracking. In one embodiment this film composite is comprised of a transparent base sheet having on one side thereof a weather resistant hard coat comprised of: at least one multifunctional acrylate monomer or oligomer; a dual curable resin comprising an aliphatic urethane acrylate resin having isocyanate functional groups and an aliphatic urethane acrylate having hydroxyl functional groups; an ultraviolet (UV) stabilizer; and a photoinitiator.

No. of Pages : 21 No. of Claims : 19

(12) PATENT APPLICATION PUBLICATION
(19) INDIA
(22) Date of filing of Application :25/09/2013
(21) Application No.8363/DELNP/2013 A
(43) Publication Date : 19/12/2014

(54) Title of the invention : BUFFER SYSTEM FOR PROTEIN PURIFICATION

(51) International classification :C07K1/16
(31) Priority Document No :61/468814
(32) Priority Date :29/03/2011
(33) Name of priority country :U.S.A.
(86) International Application No :PCT/US2012/031076
Filing Date :29/03/2012
(87) International Publication No :WO 2012/135415
(61) Patent of Addition to Application Number :NA
Filing Date :NA
(62) Divisional to Application Number :NA
Filing Date :NA

(71)**Name of Applicant :**
1)GLAXOSMITHKLINE LLC
Address of Applicant :One Franklin Plaza 200 North 16th Street Philadelphia PA 19102 U.S.A.
(72)**Name of Inventor :**
1)GOKLEN Kent E.
2)SUDA Eric J.
3)UBIERA Antonio Raul

(57) Abstract :
A method for purifying a protein using a simplified sodium chloride free buffer system that consists of two components (acid and base pairs) for appropriate solution pH control; and a third component for ionic strength control where the third component is the sodium salt conjugate base.

No. of Pages : 32 No. of Claims : 27

(12) PATENT APPLICATION PUBLICATION
(19) INDIA
(22) Date of filing of Application :25/09/2013
(21) Application No.8364/DELNP/2013 A
(43) Publication Date : 19/12/2014

(54) Title of the invention : TEMPERATURE CONTROLLED LAMINAIR AIR FLOW DEVICE

(51) International classification :F24F3/16,A47C21/04,A61G13/10
(31) Priority Document No :61/472359
(32) Priority Date :06/04/2011
(33) Name of priority country :U.S.A.
(86) International Application No :PCT/EP2012/056222
Filing Date :04/04/2012
(87) International Publication No :WO 2012/136728
(61) Patent of Addition to Application Number :NA
Filing Date :NA
(62) Divisional to Application Number :NA
Filing Date :NA

(71)**Name of Applicant :**
1)AIRSONETT AB
Address of Applicant :Metallgatan 33 S 26272 „ngelholm Sweden
(72)**Name of Inventor :**
1)KRISTENSSON Dan Allan Robert
2)SVENSSON Pl Martin

(57) Abstract :
The present invention provides a practical method for treating atopic dermatitis. By subjecting patients suffering from atopic dermatitis to filtered temperature controiled laminar air flow disease symptoms have been significantly reduced and even removed. The velocity of the laminar air flow is balanced such that body convections are braked without the generation of draught..

No. of Pages : 38 No. of Claims : 9

(12) PATENT APPLICATION PUBLICATION
(19) INDIA
(22) Date of filing of Application :19/09/2013
(21) Application No.8199/DELNP/2013 A
(43) Publication Date : 19/12/2014

(54) Title of the invention : MICRO DEVICE ON GLASS

(51) International classification :H01L21/00
(31) Priority Document No :NA
(32) Priority Date :NA
(33) Name of priority country :NA
(86) International Application No :PCT/SG2011/000129
Filing Date :30/03/2011
(87) International Publication No :WO 2012/134394
(61) Patent of Addition to Application Number :NA
Filing Date :NA
(62) Divisional to Application Number :NA
Filing Date :NA

(71)**Name of Applicant :**
1)VISWANADAM Gautham
Address of Applicant :58 Mariam Way Singapore 508577 Singapore
(72)**Name of Inventor :**
1)VISWANADAM Gautham

(57) Abstract :
A method of fabricating a micro device having micro features on glass is presented. The method includes the steps of preparing a first glass substrate fabricating a metallic pattern on the first glass substrate preparing a second glass substrate and providing one or more apertures on the second glass substrate heating the first glass substrate and the second glass substrate with a controlled temperature raise bonding the first glass substrate and the second glass substrate by applying pressure to form a bonded substrate wherein the metallic pattern is embedded within the bonded substrate cooling the bonded substrate with a controlled temperature drop and thereafter maintaining the bonded substrate at a temperature suitable for etching etching the metallic pattern within the bonded substrate wherein an etchant has access to the metallic pattern via the apertures forming a void within the bonded substrate wherein the void comprises micro features.

No. of Pages : 17 No. of Claims : 16

(12) PATENT APPLICATION PUBLICATION
(19) INDIA
(22) Date of filing of Application :25/09/2013
(21) Application No.8370/DELNP/2013 A
(43) Publication Date : 19/12/2014

(54) Title of the invention : ORAL CARE KIT INCLUDING VISIBLE STICKER PANEL

(51) International classification :B65D75/36
(31) Priority Document No :NA
(32) Priority Date :NA
(33) Name of priority country :NA
(86) International Application No :PCT/US2011/031670
Filing Date :08/04/2011
(87) International Publication No :WO 2012/138346
(61) Patent of Addition to Application Number :NA
Filing Date :NA
(62) Divisional to Application Number :NA
Filing Date :NA

(71)**Name of Applicant :**
1)COLGATE PALMOLIVE COMPANY
Address of Applicant :300 Park Avenue New York New York 10022 U.S.A.
(72)**Name of Inventor :**
1)LEE David K.
2)NGUYEN Quang

(57) Abstract :
An oral care kit (1000) including an oral care product (200) and a sticker panel (300). In one aspect the invention may be an oral care kit (1000) comprising: a package (100); a toothbrush (200) disposed within the package (100); and a sticker panel (300) disposed within the package (100) the sticker panel (300) comprising a plurality of detachable stickers (301) the sticker panel (300) forming a sleeve through which a portion of the toothbrush (200) extends the plurality of stickers (301) visible from outside of the package (100) through a substantially transparent portion of the package (100).

No. of Pages : 27 No. of Claims : 29

(12) PATENT APPLICATION PUBLICATION
(19) INDIA
(22) Date of filing of Application :25/09/2013
(21) Application No.8371/DELNP/2013 A
(43) Publication Date : 19/12/2014

(54) Title of the invention : PORTABLE TERMINAL MANAGEMENT SERVER AND PORTABLE TERMINAL MANAGEMENT PROGRAM

(51) International classification :G06Q10/06
(31) Priority Document No :NA
(32) Priority Date :NA
(33) Name of priority country :NA
(86) International Application No :PCT/JP2011/007344
Filing Date :28/12/2011
(87) International Publication No :WO 2013/098897
(61) Patent of Addition to Application Number :NA
Filing Date :NA
(62) Divisional to Application Number :NA
Filing Date :NA

(71)**Name of Applicant :**
1)IPS CO. LTD.
Address of Applicant :20F Harborland Daiya Nissei Bldg.1 7 4 Higashi kawasaki cho Chuo ku Kobe shi Hyogo 6500044 Japan
(72)**Name of Inventor :**
1)AKITA Toshifumi

(57) Abstract :
In a business system providing information relating to a form for a portable communication terminal, the security is further improved, and the processing load required for updating data or searching for data in an ERP system is reduced, A portable terminal managing server (10) operated by ERP includes a process flow DB (18) storing process flow data that is various kinds of data relating to a process flow including a plurality of business processes and is a data including status data, common data, and process specific data and provides the process flow data stored in the process flow DB (18) for a portable terminal (31) in accordance with a reading request for the process flow data from the portable terminal (31) that is in a login state.

No. of Pages : 102 No. of Claims : 8

(12) PATENT APPLICATION PUBLICATION
(19) INDIA
(22) Date of filing of Application :25/09/2013
(21) Application No.8372/DELNP/2013 A
(43) Publication Date : 19/12/2014

(54) Title of the invention : REVERSIBLE ROTATION MECHANISM AND DISCHARGE ASSEMBLY FOR DISCHARGING DREDGED MATERIAL

(51) International classification :F16H31/00,E02F3/88,E02F3/90
(31) Priority Document No :2006500
(32) Priority Date :31/03/2011
(33) Name of priority country :Netherlands
(86) International Application No :PCT/NL2012/050216
Filing Date :02/04/2012
(87) International Publication No :WO 2012/134297
(61) Patent of Addition to Application Number :NA
Filing Date :NA
(62) Divisional to Application Number :NA
Filing Date :NA

(71)**Name of Applicant :**
1)IHC HOLLAND IE B.V.
Address of Applicant :Molendijk 94 NL 3361 EP Sliedrecht Netherlands
(72)**Name of Inventor :**
1)DE JAGER Arie
2)KUYPERS Ronny Hubertus Anna
3)KLOP Hendrik Adam
4)VAN OPSTAL Timothy Alexander

(57) Abstract :
The invention relates a reversible rotation mechanism (1) for generating a rotational motion comprising a first and second toothed wheel (11 12) and a plurality of actuators (31 34) are arranged to rotate the first toothed wheel (11) in a first direction and the second toothed wheel (21) in a second direction opposite to the first direction. The mechanism comprises a plurality two ended pawls (40) connected to respective actuators (31 34) which can be positioned in a first engaging position in which a first pawl end (41) engages with the first toothed wheel (11) which allows the respective actuators to actuate the first toothed wheel (11) in the first rotating direction and in a second engaging position in which the second pawl end (42) engages with the second toothed wheel (21) which allows the respective actuators to actuate the second toothed wheel (21) in the second rotating direction.

No. of Pages : 21 No. of Claims : 16

(12) PATENT APPLICATION PUBLICATION
(19) INDIA
(22) Date of filing of Application :18/09/2013
(21) Application No.8166/DELNP/2013 A
(43) Publication Date : 19/12/2014

(54) Title of the invention : CYCLIC PEPTIDES WITH AN ANTI NEOPLASIC AND ANTI ANGIOGENIC ACTIVITY

(51) International classification :C07K7/06,C07K7/08,A61K38/08
(31) Priority Document No :2011/0067
(32) Priority Date :21/03/2011
(33) Name of priority country :Cuba
(86) International Application No :PCT/CU2012/000002
Filing Date :21/03/2012
(87) International Publication No :WO 2012/126441
(61) Patent of Addition to Application Number :NA
Filing Date :NA
(62) Divisional to Application Number :NA
Filing Date :NA

(71)**Name of Applicant :**
1)CENTRO DE INGENIERIA GENETICA Y BIOTECNOLOGIA
Address of Applicant :Avenida 31 entre 158 y 190 Cubanac¡n Playa La Habana 11600 Cuba
(72)**Name of Inventor :**
1)ABRAHANTES P‰REZ Mara del Carmen
2)CHINEA SANTIAGO Glay
3)MART NEZ D AZ Eduardo
4)GARAY P‰REZ Hilda Elisa
5)REYES ACOSTA Osvaldo
6)LPEZ MOLA Ernesto
7)LPEZ ABAD Cruz Matilde
8)GONZALEZ BLANCO Sonia

(57) Abstract :
The invention relates to cyclic peptides having anti tumoral and anti angiogenic properties and to the pharmaceutically acceptable salts thereof and the pharmaceutical compositions containing same. Said cyclic peptides are used in the preparation of medicaments for human and/or veterinary therapeutics and can also be used in diagnostics. Said compounds can be used to detect monitor and/or control a variety of disorders relating to cellular proliferation such as oncological diseases and unwanted angiogenesis.
Furthermore they can form part of controlled release systems and systems pertaining to the field of nanobiotechnology due to the self assembly capacity thereof and as part of other systems.

No. of Pages : 63 No. of Claims : 26

(12) PATENT APPLICATION PUBLICATION
(19) INDIA
(22) Date of filing of Application :18/09/2013
(21) Application No.8168/DELNP/2013 A
(43) Publication Date : 19/12/2014

(54) Title of the invention : AUTONOMOUS FLUID CONTROL ASSEMBLY HAVING A MOVABLE DENSITY DRIVEN DIVERTER FOR DIRECTING FLUID FLOW IN A FLUID CONTROL SYSTEM

(51) International classification :E21B43/12,E21B34/08
(31) Priority Document No :NA
(32) Priority Date :NA
(33) Name of priority country :NA
(86) International Application No :PCT/US2011/060331
Filing Date :11/11/2011
(87) International Publication No :WO 2013/070235
(61) Patent of Addition to Application Number :NA
Filing Date :NA
(62) Divisional to Application Number :NA
Filing Date :NA

(71)**Name of Applicant :**
1)HALLIBURTON ENERGY SERVICES INC.
Address of Applicant :10200 Bellaire Blvd. Houston TX 77072 U.S.A.
(72)**Name of Inventor :**
1)FRIPP Michael L.
2)DYKSTRA Jason D.
3)DEJESUS Jason D.

(57) Abstract :
An apparatus is presented for autonomously controlling fluid flow in a subterranean well the fluid having a density which changes over time. An embodiment of the apparatus has a vortex chamber a vortex outlet and first and second inlets into the vortex chamber. Flow into the inlets is directed by a fluid control system which has a control passageway for directing fluid flow as it exits a primary passageway. A movable fluid diverter positioned in the control passageway moves in response to change in fluid density to restrict fluid flow through the control passageway. When fluid flow through the control passageway is unrestricted fluid from the control passageway directs fluid exiting the primary passageway toward a selected vortex inlet. When flow through the control passageway is unrestricted flow from the primary passageway is directed into the other vortex inlet.

No. of Pages : 48 No. of Claims : 20

(12) PATENT APPLICATION PUBLICATION
(19) INDIA
(22) Date of filing of Application :18/09/2013
(21) Application No.8169/DELNP/2013 A
(43) Publication Date : 19/12/2014

(54) Title of the invention : FILTERING MEDIUM FOR FILTER AND WATER FILTERING APPARATUS PROVIDED WITH FILTERING MEDIUM

(51) International classification	:B01D39/16,B01D29/01,B32B5/26
(31) Priority Document No	:2011076026
(32) Priority Date	:30/03/2011
(33) Name of priority country	:Japan
(86) International Application No	:PCT/JP2012/058331
Filing Date	:29/03/2012
(87) International Publication No	:WO 2012/133631
(61) Patent of Addition to Application Number	:NA
Filing Date	:NA
(62) Divisional to Application Number	:NA
Filing Date	:NA

(71)**Name of Applicant :**
1)KURARAY CO. LTD.
Address of Applicant :1621 Sakazu Kurashiki shi Okayama 7100801 Japan
(72)**Name of Inventor :**
1)HOSOYA Takayoshi
2)KAWAI Hiroyuki
3)HAYAKAWA Tomohiro
4)ARAMAKI Jun

(57) Abstract :
The present invention provides a filtering material for filtering water having high collection efficiency and long filtering life, and a water filtering apparatus including the material. The present filtering material includes a laminated sheet in which a nanofiber layer formed from a nanofiber having a 10 single fiber average diameter of 10 to 1000 nm and meeting all the following conditions and a base material including a nonwoven or woven fabric containing a hydrophilic fiber having a single fiber average diameter of not less than 1 um. Further, the present water filtering apparatus is configured by including the filtering material for filtering water. (1) The nanofiber layer has a basis weight 15 of 0.1 to 10 g/m . (2) The nanofiber is a continuous long fiber. (3) The nanofiber contains at least an ethylene-vinyl alcohol copolymer. -<29>-

No. of Pages : 32 No. of Claims : 9

(12) PATENT APPLICATION PUBLICATION
(19) INDIA
(22) Date of filing of Application :25/09/2013
(21) Application No.8378/DELNP/2013 A
(43) Publication Date : 19/12/2014

(54) Title of the invention : PROCESSES AND APPARATUSES FOR OXIDIZING ELEMENTAL MERCURY IN FLUE GAS USING OXYCHLORINATION CATALYSTS

(51) International classification :B01D53/64,B01D53/86,B01D53/60
(31) Priority Document No :13/174190
(32) Priority Date :30/06/2011
(33) Name of priority country :U.S.A.
(86) International Application No :PCT/US2012/038964
Filing Date :22/05/2012
(87) International Publication No :WO 2013/002917
(61) Patent of Addition to Application Number :NA
Filing Date :NA
(62) Divisional to Application Number :NA
Filing Date :NA

(71)**Name of Applicant :**
1)UOP LLC
Address of Applicant :25 East Algonquin Road P. O. Box 5017 Des Plaines Illinois 60017 5017 U.S.A.
(72)**Name of Inventor :**
1)SCHAAL Melanie Timmons
2)BEDARD Robert L.

(57) Abstract :
Processes for decreasing elemental mercury in flue gas stream are provided. The processes include receiving the flue gas stream containing elemental mercury in an oxidation zone and maintaining the oxidation zone at a temperature of less than 200C. In the oxidation zone the flue gas stream is contacted with an oxychlorination catalyst. As a result the elemental mercury is oxidized to create oxidized mercury in an oxidized flue gas. The oxidized mercury is then removed from the oxidized flue gas.

No. of Pages : 17 No. of Claims : 10

(12) PATENT APPLICATION PUBLICATION
(19) INDIA
(22) Date of filing of Application :25/09/2013
(21) Application No.8357/DELNP/2013 A
(43) Publication Date : 19/12/2014

(54) Title of the invention : CONTROL DEVICE FOR MECHANICAL PARKING FACILITY CONTROL METHOD AND MECHANICAL PARKING FACILITY

(51) International classification :E04H6/18,E04H6/42
(31) Priority Document No :2011166352
(32) Priority Date :29/07/2011
(33) Name of priority country :Japan
(86) International Application No :PCT/JP2012/068144
Filing Date :18/07/2012
(87) International Publication No :WO 2013/018540
(61) Patent of Addition to Application Number :NA
Filing Date :NA
(62) Divisional to Application Number :NA
Filing Date :NA

(71)**Name of Applicant :**
1)MITSUBISHI HEAVY INDUSTRIES PARKING CO. LTD.
Address of Applicant :3 1 Minatomirai 3 chome Nishi ku Yokohama shi Kanagawa 2208401 Japan
(72)**Name of Inventor :**
1)NODA Seiichi
2)HARA Kazuya
3)HATANO Takamasa
4)SUDA Kazuhiro

(57) Abstract :
A control apparatus (40) is provided with an external control panel (14) that is provided outside a storage/removal door (12) and that is used for performing an authentication operation of a user, a start-up operation of a mechanical parking lot (1), opening/closing operation of the storage/removal door (12), and so forth; a portable authentication medium (70) that stores authentication information specific to the user and that allows the user to operate the external control panel (14) when brought into an external authentication area (Al) formed in a limited area in the vicinity of the external control panel (14); an externalauthentication- area antenna (61) that forms the external authentication area (Al), detects the portable authentication medium (70) brought into the external authentication area (Al), and emits an external authentication signal (SIG. 1) on the basis of the authentication information specific to the portable authentication medium (70) ; and a main control portion (41) that permits the user to operate the external control panel (14), on the condition that the external authentication signal (SIG. 1) is being received. FIG. 89

No. of Pages : 106 No. of Claims : 16

(12) PATENT APPLICATION PUBLICATION
(19) INDIA
(22) Date of filing of Application :25/09/2013
(21) Application No.8359/DELNP/2013 A
(43) Publication Date : 19/12/2014

(54) Title of the invention : METHOD AND COMPOSITIONS FOR CELLULAR IMMUNOTHERAPY

(51) International classification	:C12N5/0783,C07K16/28,C07K16/30
(31) Priority Document No	:61/466552
(32) Priority Date	:23/03/2011
(33) Name of priority country	:U.S.A.
(86) International Application No	:PCT/US2012/030388
Filing Date	:23/03/2012
(87) International Publication No	:WO 2012/129514
(61) Patent of Addition to Application Number	:NA
Filing Date	:NA
(62) Divisional to Application Number	:NA
Filing Date	:NA

(71)**Name of Applicant :**
1)FRED HUTCHINSON CANCER RESEARCH CENTER
Address of Applicant :1100 Fairview Avenue North Mailstop: J6 200 Seattle WA 98109 1024 U.S.A.
(72)**Name of Inventor :**
1)RIDDELL Stanley R.
2)HUDECEK Michael

(57) Abstract :
The present invention provides methods and compositions to confer and/or augment immune responses mediated by cellular immunotherapy such as by adoptively transferring genetically modified tumor specific CD8+ T cells in the presence of tumor specific subset specific genetically modified CD4+ T cells wherein the CD4+ T cells confer and/or augment a CD8+ T cells ability to sustain anti tumor reactivity and increase and/or maximize tumor specific proliferation of the tumor specific CD8+ T cells of interest. Pharmaceutical formulations produced by the method and methods of using the same are also described.

No. of Pages : 72 No. of Claims : 38

(12) PATENT APPLICATION PUBLICATION
(19) INDIA
(22) Date of filing of Application :25/09/2013
(21) Application No.8380/DELNP/2013 A
(43) Publication Date : 19/12/2014

(54) Title of the invention : CHLOROPRENE RUBBER COMPOSITION AND VULCANIZED RUBBER THEREOF AND RUBBER MOLDED PRODUCT VIBRATION DAMPING RUBBER MEMBER ENGINE MOUNT AND HOSE USING VULCANIZED RUBBER

(51) International classification :C08L11/00,C08K3/04,C08K5/11
(31) Priority Document No :2011053862
(32) Priority Date :11/03/2011
(33) Name of priority country :Japan
(86) International Application No :PCT/JP2012/054197
Filing Date :22/02/2012
(87) International Publication No :WO 2012/124442
(61) Patent of Addition to Application Number :NA
Filing Date :NA
(62) Divisional to Application Number :NA
Filing Date :NA

(71)**Name of Applicant :**
1)DENKI KAGAKU KOGYO KABUSHIKI KAISHA
Address of Applicant :1 1 Nihonbashi Muromachi 2 chome Chuo ku Tokyo 1038338 Japan
(72)**Name of Inventor :**
1)ABE Yasushi
2)ISHIGURO Hiroyuki

(57) Abstract :
Provided is technology with which it is possible to further improve vibration damping properties in low temperature environments without compromising the mechanical properties compression set or tensile fatigue of chloroprene rubber. Provided is a chloroprene rubber composition at least comprising 100 parts by mass of a chloroprene rubber containing at least a xanthogen modified chloroprene rubber or a mercaptane modified chloroprene rubber 15 to 150 parts by mass of carbon black having a number average grain size of 70 nm to 600 nm and a DBP oil absorption of 15 mL/100 g to 60 mL/100 g as measured by JIS K6221 oil absorption method A and 3 to 30 parts by mass of a plasticizer represented by chemical formula (1): RCOO (CH) COOR···(1) (where R and R are C alkyl groups).

No. of Pages : 39 No. of Claims : 9

(12) PATENT APPLICATION PUBLICATION
(19) INDIA
(22) Date of filing of Application :25/09/2013
(21) Application No.8381/DELNP/2013 A
(43) Publication Date : 19/12/2014

(54) Title of the invention : ENCODING METHOD DECODING METHOD ENCODING DEVICE DECODING DEVICE PROGRAM AND RECORDING MEDIUM

(51) International classification :G10L19/02,H03M7/30
(31) Priority Document No :2011083740
(32) Priority Date :05/04/2011
(33) Name of priority country :Japan
(86) International Application No :PCT/JP2012/057685
Filing Date :26/03/2012
(87) International Publication No :WO 2012/137617
(61) Patent of Addition to Application Number :NA
Filing Date :NA
(62) Divisional to Application Number :NA
Filing Date :NA

(71)**Name of Applicant :**
1)NIPPON TELEGRAPH AND TELEPHONE CORPORATION
Address of Applicant :3 1 Otemachi 2 chome Chiyoda ku Tokyo 1008116 Japan
(72)**Name of Inventor :**
1)MORIYA Takehiro
2)HARADA Noboru
3)KAMAMOTO Yutaka
4)HIWASAKI Yusuke
5)FUKUI Masahiro

(57) Abstract :
In an encoding process a sample string of a frequency region derived from an acoustic signal is divided by a weighted envelope the result divided by the gain is quantized and each of the samples is subjected to variable length encoding. The error between the sample prior to quantization and the sample after quantization is quantized using information saved by the variable length encoding. A rule for determining which sample error to quantize is determined in accordance with the number of bits saved and quantization is performed. In the decoding process the variable length code in the inputted code string is decoded and the sample string of the frequency region is obtained; the error signal is furthermore decoded following the rule corresponding to the number of bits in the variable length code; and the original sample string is obtained from the obtained sample string on the basis of auxiliary information.

No. of Pages : 53 No. of Claims : 20

(12) PATENT APPLICATION PUBLICATION
(19) INDIA
(22) Date of filing of Application :23/09/2013
(21) Application No.8280/DELNP/2013 A
(43) Publication Date : 19/12/2014

(54) Title of the invention : COMPUTERIZED TOOL PATH GENERATION

(51) International classification :G06F19/00
(31) Priority Document No :13/036726
(32) Priority Date :28/02/2011
(33) Name of priority country :U.S.A.
(86) International Application No :PCT/IL2012/000087
Filing Date :22/02/2012
(87) International Publication No :WO 2012/117391
(61) Patent of Addition to Application Number :NA
Filing Date :NA
(62) Divisional to Application Number :NA
Filing Date :NA

(71)**Name of Applicant :**
1)SOLIDCAM LTD.
Address of Applicant :33 Kaplan Street 60305 Or Yehuda Israel
(72)**Name of Inventor :**
1)BERMAN Michael
2)OSOVLANSKI Doron
3)CALDERONE Christopher Matthew
4)CALDERONE Anthony Joseph

(57) Abstract :
An automated computer implemented method for generating commands for controlling a computer numerically controlled machine to fabricate an object from a workpiece the method including the steps of selecting a maximum permitted engagement angle between a rotating cutting tool and the workpiece selecting a minimum permitted engagement angle between the rotating cutting tool and the workpiece and configuring a tool path for the tool relative to the workpiece in which the engagement angle gradually varies between the maximum permitted engagement angle and the minimum permitted engagement angle.

No. of Pages : 125 No. of Claims : 19

(12) PATENT APPLICATION PUBLICATION
(19) INDIA
(22) Date of filing of Application :23/09/2013
(21) Application No.8281/DELNP/2013 A
(43) Publication Date : 19/12/2014

(54) Title of the invention : AQUEOUS LIQUID ABSORBABLE RESIN AQUEOUS LIQUID ABSORBABLE COMPOSITION AND ABSORBER MATERIAL AND ABSORBABLE OBJECT EACH PRODUCED USING SAME

(51) International classification :C08L3/10,C08G81/00,C08L33/04
(31) Priority Document No :2011065103
(32) Priority Date :24/03/2011
(33) Name of priority country :Japan
(86) International Application No :PCT/JP2012/057089
Filing Date :21/03/2012
(87) International Publication No :WO 2012/128264
(61) Patent of Addition to Application Number :NA
Filing Date :NA
(62) Divisional to Application Number :NA
Filing Date :NA

(71)**Name of Applicant :**
1)SANYO CHEMICAL INDUSTRIES LTD.
Address of Applicant :11 1 Ikkyo Nomotocho Higashiyama ku Kyoto shi Kyoto 6050995 Japan
(72)**Name of Inventor :**
1)UEDA Yusuke
2)KANDA Yoichi

(57) Abstract :
An absorbable resin, for which a large amount of a plant-derived raw material can be used, and which has an excellent capability of absorbing an aqueous liquid, and has a good gel modulus and therefore can exhibit an excellent absorbing capability under pressurized conditions; and an absorbable composition. An absorbable resin produced by binding an oxidized polysaccharide (Al) having a carboxyl group which may be neutralized with a neutralizing agent and/or a crosslinked product thereof (A2) to a poly(meth)acrylic acid (Bl) in which at least one carboxyl group may be neutralized with a neutralizing agent and/or a crosslinked product thereof (B2); or an absorbable composition produced by mixing the component (Al) and/or the component (A2) with the component (Bl) and/or the component (B2). The component (Al) has a weight average molecular weight of 2,000-10,000,000. The component (Al) has an acid value of 65-850 mgKOH/g. When the component (Al) has a carboxyl group which is neutralized with a neutralizing agent, the acid value of the component (Al) before the neutralization is 65-850 mgKOH/g.

No. of Pages : 90 No. of Claims : 25

(12) PATENT APPLICATION PUBLICATION
(19) INDIA
(22) Date of filing of Application :26/09/2013
(21) Application No.8389/DELNP/2013 A
(43) Publication Date : 19/12/2014

(54) Title of the invention : INTEGRATED PUNCTURE NEEDLE ADAPTER

(51) International classification :A61J3/00,A61M5/158
(31) Priority Document No :2011061507
(32) Priority Date :18/03/2011
(33) Name of priority country :Japan
(86) International Application No :PCT/JP2012/056343
Filing Date :13/03/2012
(87) International Publication No :WO 2012/128115
(61) Patent of Addition to Application Number :NA
Filing Date :NA
(62) Divisional to Application Number :NA
Filing Date :NA

(71)**Name of Applicant :**
1)Terumo Kabushiki Kaisha
Address of Applicant :44 1 Hatagaya 2 chome Shibuya ku Tokyo 1510072 Japan
(72)**Name of Inventor :**
1)OKIHARA Hitoshi

(57) Abstract :
The integrated puncture needle adapter 1 is equipped with: a puncture needle 21; a needle hub 22; a tubular fixing part 31 for fixing the needle hub 22; a tubular puncture needle accommodating part 32 provided on a distal side of the tubular fixing part 31 and having therein an accommodating space 321 for accommodating the puncture needle 21; a second connecting part 34 provided on a distal side of the puncture needle accommodating part 32; and a separable part 35 which is formed between the tubular fixing part 31 and the puncture needle accommodating part 32. A part on the distal side of the separable part is separable from a part on the proximal side of the separable part. The puncture needle 21 is exposed when separated.

No. of Pages : 69 No. of Claims : 6

(12) PATENT APPLICATION PUBLICATION
(19) INDIA
(22) Date of filing of Application :26/09/2013
(21) Application No.8390/DELNP/2013 A
(43) Publication Date : 19/12/2014

(54) Title of the invention : FERRITE STAINLESS STEEL EXHIBITING EXCELLENT CORROSION RESISTANCE AND STRENGTH IN WELD ZONES AND TIG WELDED STRUCTURE

(51) International classification :C22C38/00,B21B3/02,B23K9/167
(31) Priority Document No :2011072269
(32) Priority Date :29/03/2011
(33) Name of priority country :Japan
(86) International Application No :PCT/JP2012/058422
Filing Date :29/03/2012
(87) International Publication No :WO 2012/133681
(61) Patent of Addition to Application Number :NA
Filing Date :NA
(62) Divisional to Application Number :NA
Filing Date :NA

(71)**Name of Applicant :**
1)Nippon Steel & Sumikin Stainless Steel Corporation
Address of Applicant :6 1 Otemachi 2 chome Chiyoda ku Tokyo 1000004 Japan
(72)**Name of Inventor :**
1)MATSUHASHI Tooru
2)NAKATA Michio

(57) Abstract :
Ferritic stainless steel excellent in corrosion stPW resistance of the weld zone, in particular the corrosion 5 resistance to crevice corrosion, even if eliminating the Ar gas shield at the time of TIG welding and, furthermore, excellent in weld zone strength and a structure of the same are provided. By making the ingredient system one satisfying the following formula 10 (1) in ferritic stainless steel which has predetermined contents of ingredients by mass% under a usual corrosive environment, it is possible to raise the co:frosion resistance. Furthermore, under a severely corrosive environment, by making the relationship between the back 15 surface exposed width of the weld bead and the steel sheet thickness satisfy the formula (2) in addition to the relationship of the ingredients prescribed in formula (1), it is possible to obtain a welded structure strong in crevice corrosion. Furthermore, by improving the weld 20 strength by making the contents of Nb and V satisfy formula 3, it is possible to obtain a welded structure with a high weld strength: $Si+2.5Al+3Ti<1.50$... (formula (1)) $0<Wb/2t<1.50$... (formula (2)) 25 (t: sheet thickness of welded metal, Wb: length of bead width exposed at back surface) $NbxV>0.01$... (formula 3)

No. of Pages : 48 No. of Claims : 6

(12) PATENT APPLICATION PUBLICATION
(19) INDIA
(22) Date of filing of Application :17/09/2013
(21) Application No.8130/DELNP/2013 A
(43) Publication Date : 19/12/2014

(54) Title of the invention : PORTABLE ULTRASOUND SYSTEM

(51) International classification :A61B8/00
(31) Priority Document No :2011070522
(32) Priority Date :28/03/2011
(33) Name of priority country :Japan
(86) International Application No :PCT/JP2012/051270
Filing Date :20/01/2012
(87) International Publication No :WO 2012/132506
(61) Patent of Addition to Application Number :NA
Filing Date :NA
(62) Divisional to Application Number :NA
Filing Date :NA

(71)**Name of Applicant :**
1)HITACHI MEDICAL CORPORATION
Address of Applicant :4 14 1 Soto kanda Chiyoda ku Tokyo 1010021 Japan
(72)**Name of Inventor :**
1)NINOMIYA Atsushi
2)YANASE Kazuyuki
3)YOKOYAMA Masaru
4)KASHIWAGI Takashi
5)MATSUSHITA Taisuke

(57) Abstract :
Provided is a portable ultrasound system with excellent operability and aesthetics and which is capable of adopting various storage positions to accommodate the sizes of storage locations. A keyboard case (50) equipped with an input device such as a keyboard and a display case (80) that houses a display are attached to a main body case (30) that houses the essential parts of an ultrasound system so as to be capable of independently moving around axes of rotation (P1 P2) and the axes of rotation (P1 P2) are configured in such a manner as to be on a common axis (P). A rotating shaft (200) that supports the display case (80) is supported by a bushing on the main body case that is lower than the axis (P) and is capable of rotating around an axis of rotation (Q) which is orthogonal to the axis P. This configuration enables the portable ultrasound system to adopt a rotatable operating position by standing the display case (80) up and to adopt a plurality of storage positions in which the position of the main body case (30) is made to differ with respect to the keyboard case (50) and the display case (80).

No. of Pages : 64 No. of Claims : 15

(12) PATENT APPLICATION PUBLICATION
(19) INDIA
(22) Date of filing of Application :17/09/2013
(21) Application No.8132/DELNP/2013 A
(43) Publication Date : 19/12/2014

(54) Title of the invention : MEDICAL INJECTOR WITH RATCHETING PLUNGER

(51) International classification :A61M5/00
(31) Priority Document No :NA
(32) Priority Date :NA
(33) Name of priority country :NA
(86) International Application No :PCT/US2011/000493
Filing Date :17/03/2011
(87) International Publication No :WO 2012/125133
(61) Patent of Addition to Application Number :NA
Filing Date :NA
(62) Divisional to Application Number :NA
Filing Date :NA

(71)**Name of Applicant :**
1)BECTON DICKINSON AND COMPANY
Address of Applicant :David M. Fortunato MC110 1 Becton Drive Franklin Lakes NJ 07417 U.S.A.
(72)**Name of Inventor :**
1)CRONENBERG Richard

(57) Abstract :
A medical injector including a body having a distal end and a proximal end and a plunger displaceably disposed in the body. The plunger includes a plurality of spaced apart ratchet teeth disposed along the length thereof. The plunger selectively displaces a stopper to dispense a medicament from said medical injector. The medical injector also includes an indexer disposed within the body to engage the plunger to permit distal displacement of the plunger and substantially prevent proximal displacement of the plunger an actuator having an engagement portion to engage the plunger to permit proximal displacement of the actuator relative to the plunger and substantially prevent distal displacement of the actuator relative to the plunger and a rotating member for proximally displacing the engagement portion relative to the plunger and the body.

No. of Pages : 42 No. of Claims : 20

(12) PATENT APPLICATION PUBLICATION
(19) INDIA
(22) Date of filing of Application :17/09/2013
(21) Application No.8133/DELNP/2013 A
(43) Publication Date : 19/12/2014

(54) Title of the invention : MEDICAL INJECTOR WITH ROTATABLE RATCHETING PLUNGER

(51) International classification :A61M5/315
(31) Priority Document No :NA
(32) Priority Date :NA
(33) Name of priority country :NA
(86) International Application No :PCT/US2011/000492
Filing Date :17/03/2011
(87) International Publication No :WO 2012/125132
(61) Patent of Addition to Application Number :NA
Filing Date :NA
(62) Divisional to Application Number :NA
Filing Date :NA

(71)**Name of Applicant :**
1)BECTON DICKINSON AND COMPANY
Address of Applicant :David M. Fortunato MC110 1 Becton Drive Franklin Lakes NJ 07417 U.S.A.
(72)**Name of Inventor :**
1)CRONENBERG Richard
2)WU Haiming

(57) Abstract :
A medical injector has a body with a displaceable plunger which has a plurality of ratchet teeth along its length. An indexer is provided to engage the plunger wherein the indexer is configured to allow the plunger to displace distally. The medical injector also includes an actuator having an engagement portion formed to engage the ratchet teeth. The.actuator is displaceable to a ready state the engagement portion being displaced proximally relative to the plunger with the actuator being displaced to the ready state. The indexer prevents proximal movement of the plunger thereby allowing the engagement portion to bypass one or more of the ratchet teeth with the actuator being displaced to the ready state. The plunger is slidably displaceable relative to the body and rotatable relative to the body to selectively engage and disengage ratchet teeth engaged with the indexer and the actuator.

No. of Pages : 38 No. of Claims : 20

(12) PATENT APPLICATION PUBLICATION
(19) INDIA
(22) Date of filing of Application :17/09/2013
(21) Application No.8134/DELNP/2013 A
(43) Publication Date : 19/12/2014

(54) Title of the invention : INCINERATOR HAVING AFTERBURNER GRATE

(51) International classification :F23G5/16
(31) Priority Document No :10 2011 015 088.9
(32) Priority Date :25/03/2011
(33) Name of priority country :Germany
(86) International Application No :PCT/EP2012/053501
Filing Date :01/03/2012
(87) International Publication No :WO 2012/130554
(61) Patent of Addition to Application Number :NA
Filing Date :NA
(62) Divisional to Application Number :NA
Filing Date :NA

(71)**Name of Applicant :**
1)CLYDE BERGEMANN DRYCON GMBH
Address of Applicant :Schillwiese 20 46485 Wesel Germany
(72)**Name of Inventor :**
1)MORENO RUEDA Rafael

(57) Abstract :
The invention relates to an incinerator (1) having a combustion chamber (2) that is at least partially enclosed by a housing (3) wherein the combustion chamber (2) has at least one ash outlet (4) to which at least one afterburner gate (5) for unburned components of ash (6) is allocated.

No. of Pages : 15 No. of Claims : 10

(12) PATENT APPLICATION PUBLICATION
(19) INDIA
(22) Date of filing of Application :18/09/2013
(21) Application No.8181/DELNP/2013 A
(43) Publication Date : 19/12/2014

(54) Title of the invention : BULKED ABSORBENT MEMBERS

(51) International classification	:A61F13/15,D04H1/425,D04H1/26
(31) Priority Document No	:13/094295
(32) Priority Date	:26/04/2011
(33) Name of priority country	:U.S.A.
(86) International Application No	:PCT/US2012/034964
Filing Date	:25/04/2012
(87) International Publication No	:WO 2012/148999
(61) Patent of Addition to Application Number	:NA
Filing Date	:NA
(62) Divisional to Application Number	:NA
Filing Date	:NA

(71)**Name of Applicant :**
1)THE PROCTER & GAMBLE COMPANY
Address of Applicant :One Procter & Gamble Plaza Cincinnati Ohio 45202 U.S.A.
(72)**Name of Inventor :**
1)CURRO John Joseph
2)ORR Jill Marlene
3)PRIESSMAN Keith Robert
4)STRUBE John Brian

(57) Abstract :
Absorbent members especially bulked absorbent members and methods of making the same are disclosed. The absorbent member may be in the form of a unitary absorbent fibrous layer comprising at least some cellulose fibers. The unitary absorbent fibrous layer is at least partially stratified through its thickness. The absorbent member may also have a plurality of discrete deformations such as depressions and/or apertures in its surfaces. The method involves subjecting a precursor web to at least one cycle (or pass) through a mechanical deformation process. The mechanical deformation process utilizes a first forming member and a second forming member that form a nip therebetween through which the precursor web is passed. The first and second forming members are moving at different speeds relative to each other when they come together to form the nip.

No. of Pages : 63 No. of Claims : 10

(12) PATENT APPLICATION PUBLICATION
(19) INDIA
(22) Date of filing of Application :18/09/2013
(21) Application No.8186/DELNP/2013 A
(43) Publication Date : 19/12/2014

(54) Title of the invention : DEVICE FOR INDUCTIVE ENERGY TRANSFER

(51) International classification :B60L5/00,B60M7/00,B61B13/00
(31) Priority Document No :10 2011 014 521.4
(32) Priority Date :18/03/2011
(33) Name of priority country :Germany
(86) International Application No :PCT/DE2012/100068
Filing Date :16/03/2012
(87) International Publication No :WO 2012/126465
(61) Patent of Addition to Application Number :NA
Filing Date :NA
(62) Divisional to Application Number :NA
Filing Date :NA

(71)**Name of Applicant :**
1)INGENIEURBRO DUSCHL
Address of Applicant :Am Schlopark 4 15848 Tauche Giesensdorf Germany
(72)**Name of Inventor :**
1)DUSCHL GRAW Georg

(57) Abstract :
A device for inductive energy transfer between a stationary three-phase primary system and a mobile three-phase secondary system is designed in a magnetically symmetrical form with magnetic flux paths of equal length in the three phases and a correspondingly approximately constant power transfer. A stationary iron core part and two mobile iron core parts (3, 5) which are connected electrically in series are each designed as an equilateral triangle or as a star which spans an equilateral triangle and has limbs (3a, 3b, 3c; 5a, 5b, 5c) of equal length which run at the same angle in relation to one another, and supporting posts (3ay, 3by, 3cy; 5ay, 5by, 5cy) which start from the ends of said limbs, and also primary and secondary windings (4, 6) which are arranged at the same distance from one another. The two stationary iron core parts (3) are connected at the respective supporting posts (3ay, 3by, 3cy) by means of magnetic rails (2) which run in parallel and on which the mobile iron core part (5) can roll or be positioned with the aid of ferromagnetic running rollers (7) which are accommodated in recesses (8) in the mobile supporting posts (5ay, 5by, 5cy). The device of simple design has a high degree of efficiency in respect of energy transfer. In the case of energy transfer only in the inoperative state, a stationary iron core part and a mobile iron core part can also be positioned directly one on the other without magnetic rails.

No. of Pages : 17 No. of Claims : 9

(12) PATENT APPLICATION PUBLICATION
(19) INDIA
(22) Date of filing of Application :18/09/2013
(21) Application No.8187/DELNP/2013 A
(43) Publication Date : 19/12/2014

(54) Title of the invention : ANTAGONISTS OF THE INTERLEUKIN 1 RECEPTOR

(51) International classification :C12N15/24,C07K14/545,A61K38/20
(31) Priority Document No :PA 2011 70120
(32) Priority Date :14/03/2011
(33) Name of priority country :Denmark
(86) International Application No :PCT/DK2012/000022
Filing Date :14/03/2012
(87) International Publication No :WO 2012/122985
(61) Patent of Addition to Application Number :NA
Filing Date :NA
(62) Divisional to Application Number :NA
Filing Date :NA

(71)**Name of Applicant :**
1)SERODUS ASA
Address of Applicant :Gaustadallen 21 N 0349 Oslo Norway
(72)**Name of Inventor :**
1)BEREZIN Vladimir
2)BOCK Elisabeth

(57) Abstract :
The present invention discloses novel peptides derived from the IL 1 receptor antagonist protein (IL1 RA) capable of binding to the cell surface IL 1 receptor 1 (IL1 R1) and interfere with the binding of IL 1 to IL1 R1. This binding thus effectively antagonises the inflammatory effects of IL 1 such as by reducing TNF alpha secretion from macrophages. This is of potential use as an anti inflammatory factor throughout the human body including the central nervous system. The use of said peptides as anti inflammatory agents for treatment of pathological conditions wherein IL 1 plays a prominent role such as inflammatory conditions of the body and the central nervous system is thus an aspect of the present invention.

No. of Pages : 110 No. of Claims : 52

(12) PATENT APPLICATION PUBLICATION
(19) INDIA
(22) Date of filing of Application :26/09/2013
(21) Application No.8395/DELNP/2013 A
(43) Publication Date : 19/12/2014

(54) Title of the invention : OVEN FOR GRILLING FOOD

(51) International classification :A47J37/07
(31) Priority Document No :CR2011A000004
(32) Priority Date :04/03/2011
(33) Name of priority country :Italy
(86) International Application No :PCT/IT2012/000062
Filing Date :02/03/2012
(87) International Publication No :WO 2012/120553
(61) Patent of Addition to Application Number :NA
Filing Date :NA
(62) Divisional to Application Number :NA
Filing Date :NA

(71)**Name of Applicant :**
1)X OVEN INVESTMENTS SA.
Address of Applicant :1 BOULEVARD DE LA FOIRE L 1528 LUXEMBOURG Luxembourg
(72)**Name of Inventor :**
1)PIAZZI Enrico

(57) Abstract :
The invention relates to the food preparation equipment sector. More in detail the invention relates to an oven for grilling food provided with: an outer shell (2) consisting of walls defining an internal volume comprising a transparent portion (3); at least one door (4) wherein said volume is subdivided into a zone (5) for heat production by means of heating means and a cooking zone (6) comprising at least one grill (7) on which said food is placed wherein that said at least one door (4) is associated with said at least one grill (7) which is slidingly supported inside said outer shell (2) and comprises a bulkhead (8) opposite said door (4) with respect to said grill (7) arranged for closing said cooking zone (6) when the grill is fully extracted from said oven.

No. of Pages : 15 No. of Claims : 10

(12) PATENT APPLICATION PUBLICATION
(19) INDIA
(22) Date of filing of Application :23/09/2013
(21) Application No.8296/DELNP/2013 A
(43) Publication Date : 19/12/2014

(54) Title of the invention : METHOD OF QUANTITATIVE MEASUREMENT OF MECHANICAL STABILITY TIME (MST) OF LATEX SUSPENSIONS AND THE APPARATUS FOR USE IN THE METHOD

(51) International classification :G01N33/44,G01N15/00
(31) Priority Document No :NA
(32) Priority Date :NA
(33) Name of priority country :NA
(86) International Application No :PCT/MY2011/000050
Filing Date :19/05/2011
(87) International Publication No :WO 2012/158015
(61) Patent of Addition to Application Number :NA
Filing Date :NA
(62) Divisional to Application Number :NA
Filing Date :NA

(71)**Name of Applicant :**
1)LEMBAGA GETAH MALAYSIA
Address of Applicant :Level 18 Bangunan Getah Asli 148 Jalan Ampang 50450 Kuala Lumpur Malaysia
(72)**Name of Inventor :**
1)OTHMAN Alias Bin
2)AMRAN Mohamad Khairul Akmal Bin
3)MANSOR Mohd Nizam Bin

(57) Abstract :
A method for the quantitative measurement of mechanical stability time (MST) of a latex suspension comprises the steps of providing a load force measuring apparatus for automatic quantitative measurement of MST of the suspension; agitating the suspension at sufficient speed so as to cause changes in the physical properties of the suspension; measuring and monitoring the changes in physical properties of the suspension by way of the load force values detected and transmitted to a control means; and automatically calculating the MST of the suspension by normal distribution analysis of the collected load force value data. An apparatus for use in the method comprises a vessel (20) for containing the suspension; an agitator (10) the agitator provided to be submerged in the suspension in use and capable of agitating the suspension at sufficient speed so as to cause changes in the physical properties of the suspension; a rotatable base (30) for holding the vessel the vessel being removably coupled to said base; and a connector (50) operatively connecting the rotatable base to a sensor (60). The sensor is capable of detecting and transmitting the load force values resulting from agitation of the suspension to a control means. The control means automatically calculates the MST of the suspension by normal distribution analysis of the collected load force value data.

No. of Pages : 32 No. of Claims : 30

(12) PATENT APPLICATION PUBLICATION
(19) INDIA
(22) Date of filing of Application :23/09/2013
(21) Application No.8297/DELNP/2013 A
(43) Publication Date : 19/12/2014

(54) Title of the invention : END OF INJECTION INDICATOR FOR INJECTION PEN

(51) International classification :A61M5/20
(31) Priority Document No :61/457403
(32) Priority Date :18/03/2011
(33) Name of priority country :U.S.A.
(86) International Application No :PCT/US2012/029545
Filing Date :16/03/2012
(87) International Publication No :WO 2012/129120
(61) Patent of Addition to Application Number :NA
Filing Date :NA
(62) Divisional to Application Number :NA
Filing Date :NA

(71)**Name of Applicant :**
1)BECTON DICKINSON AND COMPANY
Address of Applicant :Mark Schildkraut 1 Becton Drive MC089 Franklin Lakes New Jersey 07417 U.S.A.
(72)**Name of Inventor :**
1)QUINN Michael
2)CRONENBERG Richard
3)SHETTY Gautam

(57) Abstract :
A medication injection pen (50) includes a housing (1) and a dose set knob (2) rotatably connected to the housing (1) for setting a dose. An indicator member (200) is movable between an visible position indicating a zero position of the dose set knob (2) and a non visible position indicating a non zero position of the dose set knob (2). The indicator member is visible to a user in the visible position and not visible in the non visible position. The dose set knob is in the zero position when a set dose has been completely administered. Accordingly a visible indication is provided to a user when a set dose has been completely administered.

No. of Pages : 42 No. of Claims : 20

(12) PATENT APPLICATION PUBLICATION
(19) INDIA
(22) Date of filing of Application :23/09/2013
(21) Application No.8299/DELNP/2013 A
(43) Publication Date : 19/12/2014

(54) Title of the invention : VALVE

(51) International classification :F15B13/043
(31) Priority Document No :PA 2011 00196
(32) Priority Date :21/03/2011
(33) Name of priority country :Denmark
(86) International Application No :PCT/DK2012/000025
Filing Date :20/03/2012
(87) International Publication No :WO 2012/126468
(61) Patent of Addition to Application Number :NA
Filing Date :NA
(62) Divisional to Application Number :NA
Filing Date :NA

(71)**Name of Applicant :**
1)DANFOSS A/S
Address of Applicant :Nordborgvej 81 DK 6430 Nordborg Denmark
(72)**Name of Inventor :**
1)BIRKELUND Michael

(57) Abstract :
A proportional valve is provided comprising a valve (1) comprising a housing (2) having an inlet (3) and an outlet (4) a valve element (5) being positioned be¬ tween said inlet (3) and said outlet (4) said valve element (5) being moveable in said housing (2) said valve element (5) having a pilot valve opening (7) a first pressure chamber (16) a pressure in said first pressure chamber (16) acting on said valve element (5) in a first direction a second pressure chamber (17) a pressure in said pressure chamber (17) acting on said valve element (5) in a second direction opposite to said first direction a pilot valve element (6) coop¬ erating with said pilot valve opening (7) to form a pilot valve said pilot valve element (6) being actuated by drive means (8) wherein a flow resistance be¬ tween said inlet (3) and said first pressure chamber (16) is smaller than a flow resistance between said inlet (3) and said second pressure chamber (17). In such valve it is possible to reduce the electrical power needed to operate the solenoid. To this end said pilot valve opens into a third pressure chamber (19) said third pressure chamber (19) being connected to said outlet (3) via a throttled flow path (20).

No. of Pages : 12 No. of Claims : 10

(12) PATENT APPLICATION PUBLICATION
(19) INDIA
(22) Date of filing of Application :20/09/2013
(21) Application No.8223/DELNP/2013 A
(43) Publication Date : 19/12/2014

(54) Title of the invention : BALANCED ABRADING TOOL AND METHODS FOR ABRADING

(51) International classification :B24B11/04
(31) Priority Document No :NA
(32) Priority Date :NA
(33) Name of priority country :NA
(86) International Application No :PCT/US2011/030844
Filing Date :31/03/2011
(87) International Publication No :WO 2012/134489
(61) Patent of Addition to Application Number :NA
Filing Date :NA
(62) Divisional to Application Number :NA
Filing Date :NA

(71)**Name of Applicant :**
1)MICHELIN RECHERCHE ET TECHNIQUE S.A.
Address of Applicant :Route Louis Braille 10 CH 1763 Granges Paccot Switzerland
2)COMPAGNIE GENERALE DES ETABLISSEMENTS MICHELIN
(72)**Name of Inventor :**
1)IKONOMOV Metodi L.
2)ZARAK Cesar E.
3)CHEBLI Adib T.

(57) Abstract :
Exemplary embodiments of the subject invention comprise methods and apparatus concerning balanced abrading of a tire surface by an abrading tool. Such an abrading tool may comprise a pair of counter rotating driven abrading members each of the abrading members having a rotational axis generally extending laterally across the tool the abrading members being spaced apart in a lateral direction of the tool by a desired distance each of the abrading members having an abrading surface defined by at least one outer diameter the abrading surface extending axially relative to the rotational axis of the abrading member wherein each of the abrading has a shaft upon which each abrading member is arranged each of the shafts being adapted to be driven by a driving source. The tool further includes a body to which each shaft and abrading member is attached.

No. of Pages : 32 No. of Claims : 20

(12) PATENT APPLICATION PUBLICATION
(19) INDIA
(22) Date of filing of Application :20/09/2013
(21) Application No.8224/DELNP/2013 A
(43) Publication Date : 19/12/2014

(54) Title of the invention : FRONT VEHICLE BODY STRUCTURE

(51) International classification :B62D25/08,B62D25/04
(31) Priority Document No :2011051359
(32) Priority Date :09/03/2011
(33) Name of priority country :Japan
(86) International Application No :PCT/JP2012/056010
Filing Date :08/03/2012
(87) International Publication No :WO 2012/121347
(61) Patent of Addition to Application Number :NA
Filing Date :NA
(62) Divisional to Application Number :NA
Filing Date :NA

(71)**Name of Applicant :**
1)NIPPON STEEL & SUMITOMO METAL CORPORATION
Address of Applicant :6 1 Marunouchi 2 chome Chiyoda ku Tokyo 1008071 Japan
(72)**Name of Inventor :**
1)KAWACHI Takeshi
2)NIWA Toshiyuki
3)DAIMARU Seiichi

(57) Abstract :
A front vehicle body structure for a vehicle body (1) having a vehicle interior compartment (2) and a front 5 compartment (3) which is provided in front of the vehicle interior compartment (2). The front vehicle body structure is provided with: strut towers (16) to which the upper edges of struts for the front wheels are mounted; front pillars (20) extending, at positions at 10 the front of the vehicle interior compartment and on both sides in the width direction, from the roof of the vehicle interior compartment toward the upper edge of the rear of the front compartment; and reinforcement members (25, 70) each having one end joined to the strut tower 15 and the other end joined to the front pillar. Each of the reinforcement members is joined to the strut tower on both the inner side and outer side of a plane (S) with respect to the vehicle body, the plane (S) passing through the axis of the strut and extending in the front- 20 rear direction of the vehicle body. As a result of the configuration, the front vehicle body structure can efficiently increase the torsional rigidity of the vehicle body of the automobile and in turn can efficiently reduce the weight of the vehicle body by a 25 plate thickness reduction achieved using a high-tensile steel plate.

No. of Pages : 31 No. of Claims : 7

(12) PATENT APPLICATION PUBLICATION
(19) INDIA
(22) Date of filing of Application :20/09/2013
(21) Application No.8225/DELNP/2013 A
(43) Publication Date : 19/12/2014

(54) Title of the invention : STEEL SHEETS FOR HOT STAMPING METHOD FOR MANUFACTURING SAME AND METHOD FOR MANUFACTURING HIGH STRENGTH PARTS

(51) International classification :C22C38/00,B21B3/00,B21D22/20
(31) Priority Document No :NA
(32) Priority Date :NA
(33) Name of priority country :NA
(86) International Application No :PCT/JP2011/056124
Filing Date :09/03/2011
(87) International Publication No :WO 2012/120692
(61) Patent of Addition to Application Number :NA
Filing Date :NA
(62) Divisional to Application Number :NA
Filing Date :NA

(71)**Name of Applicant :**
1)NIPPON STEEL & SUMITOMO METAL CORPORATION
Address of Applicant :6 1 Marunouchi 2 chome Chiyoda ku Tokyo 1008071 Japan
(72)**Name of Inventor :**
1)KUSUMI Kazuhisa
2)OGAWA Yuji
3)ABE Masayuki
4)MURAKAMI Hidekuni
5)TAKEDA Kengo
6)MAKI Jun

(57) Abstract :
The present invention has as its object the provision of steel sheet for hot stamping use which is 5 excellent in part strength after hot stamping and delayed fracture resistance comprised of large C content high strength steel sheet in which effective hydrogen traps are formed in the steel material. The steel sheet of the present invention solves this 10 problem by forming Fe-Mn-based composite oxides in the steel sheet and trapping hydrogen at the interfaces of the composite oxides and matrix steel and in the voids around the composite oxides. Specifically, it provides steel sheet for hot 15 stamping use which is comprised of chemical ingredients which contain, by mass%, C: 0.05 to 0.40%, Si: 0.02% or less, Mn: 0.1 to 3%, S: 0.02% or less, P: 0.03% or less, Al: 0.005% or less, Ti: 0.01% or less, N: 0.01% or less, one or both of Cr and Mo in a total of 0.005 to 1%, and 20 0: 0.003 to 0.03% and which have a balance of Fe and unavoidable impurities and which contains average diameter 0.1 to 15 |om Fe-Mn-based composite oxide particles dispersed in the steel sheet or furthermore has crushed voids around the composite oxide particles, a 25 method of production of the same, and a method of production of a hot stamped high strength part.

No. of Pages : 48 No. of Claims : 9

(12) PATENT APPLICATION PUBLICATION
(19) INDIA
(22) Date of filing of Application :25/09/2013
(21) Application No.8379/DELNP/2013 A
(43) Publication Date : 19/12/2014

(54) Title of the invention : VIBRATION ACTUATOR

(51) International classification :H02N2/00,G02B7/04
(31) Priority Document No :2011052032
(32) Priority Date :09/03/2011
(33) Name of priority country :Japan
(86) International Application No :PCT/JP2012/001509
Filing Date :05/03/2012
(87) International Publication No :WO 2012/120872
(61) Patent of Addition to Application Number :NA
Filing Date :NA
(62) Divisional to Application Number :NA
Filing Date :NA

(71)**Name of Applicant :**
1)NIKON CORPORATION
Address of Applicant :12 1 Yurakucho 1 chome Chiyoda ku Tokyo 1008331 Japan
(72)**Name of Inventor :**
1)NAKAZUMI Makoto
2)TANABE Masaaki

(57) Abstract :
This vibration actuator is provided with: an electric machine conversion unit for converting electrical power to mechanical vibration; a transmitting element for transmitting vibration from the electric machine conversion unit as driving force; and an abutting element which abuts against the transmitting element and is moved by the driving force in a manner relative to the transmitting element at least 2% of the surface of contact between the transmitting element and the abutting element being the proportion of the pore surface area on one of either the transmitting element or the abutting element. In this vibration actuator the mean surface area of the pores may be at least 3 μm. In the other of the transmitting element and the abutting element the surface of contact with the mating element may contain iron.

No. of Pages : 43 No. of Claims : 12

(12) PATENT APPLICATION PUBLICATION
(19) INDIA
(22) Date of filing of Application :26/09/2013
(21) Application No.8404/DELNP/2013 A
(43) Publication Date : 19/12/2014

(54) Title of the invention : METHOD AND APPARATUS TO IMPROVE TCP PERFORMANCE IN MOBILE NETWORKS

(51) International classification	:H04L1/16,H04W36/00,H04W80/06
(31) Priority Document No	:NA
(32) Priority Date	:NA
(33) Name of priority country	:NA
(86) International Application No	:PCT/EP2011/054230
Filing Date	:21/03/2011
(87) International Publication No	:WO 2012/126509
(61) Patent of Addition to Application Number	:NA
Filing Date	:NA
(62) Divisional to Application Number	:NA
Filing Date	:NA

(71)**Name of Applicant :**
1)NOKIA SIEMENS NETWORKS OY
Address of Applicant :Karaportti 3 FI 02610 Espoo Finland
(72)**Name of Inventor :**
1)SZILAGYI Peter
2)VINCZE Zoltan
3)VULKAN Csaba

(57) Abstract :
The present invention provides a method apparatus and a computer program product for improving TCP performance in mobile networks. The present invention discloses obtaining at an intermediate network node a quality measure of a connection between a content server and a user equipment detecting at the intermediate network node whether the quality measure fulfils a predetermined condition and if the quality measure does not fulfill the predetermined condition sending by the intermediate network node an acknowledgement message triggering a freeze mode of the connection between the content server and the user equipment.

No. of Pages : 64 No. of Claims : 21

(12) PATENT APPLICATION PUBLICATION
(19) INDIA
(22) Date of filing of Application :26/09/2013
(21) Application No.8406/DELNP/2013 A
(43) Publication Date : 19/12/2014

(54) Title of the invention : THREE WHEELED VEHICLE

(51) International classification :B62K5/08,B62K5/04
(31) Priority Document No :61/454911
(32) Priority Date :21/03/2011
(33) Name of priority country :U.S.A.
(86) International Application No :PCT/US2012/029926
Filing Date :21/03/2012
(87) International Publication No :WO 2012/129294
(61) Patent of Addition to Application Number :NA
Filing Date :NA
(62) Divisional to Application Number :NA
Filing Date :NA

(71)**Name of Applicant :**
1)POLARIS INDUSTRIES INC.
Address of Applicant :2100 Highway 55 Medina MN 55340 U.S.A.
(72)**Name of Inventor :**
1)HOLROYD James A.J.
2)ZILIAK Mark Alan
3)ARAMAYO Gustavo A.
4)WIEST Mathew Bradley
5)UTTER Brian T.
6)BENNETT Jeffrey D.
7)HOHENSTEIN Jason J.
8)TOMOLILLO Vittorio
9)GASS Donald Brett

(57) Abstract :
A three wheeled vehicle (502) is disclosed having a vehicle frame (504) with a frame sidewall providing a substantially flat surface with recesses in the flat surface. Alignment arms have inner ends and outer ends where the inner ends are mounted to the frame sidewall and the outer ends mount a wheel hub. The inner ends have couplings with pivotal portions and fixed portions the pivotal portions being at least partially positioned within the recesses and the fixed portions being attached to the substantially flat surface.

No. of Pages : 99 No. of Claims : 61

(12) PATENT APPLICATION PUBLICATION
(19) INDIA
(22) Date of filing of Application :26/09/2013
(21) Application No.8407/DELNP/2013 A
(43) Publication Date : 19/12/2014

(54) Title of the invention : MESOPOROUS FRAMEWORK MODIFIED ZEOLITES

(51) International classification :C01B39/44,C01B39/42,C01B39/36
(31) Priority Document No :61/473588
(32) Priority Date :08/04/2011
(33) Name of priority country :U.S.A.
(86) International Application No :PCT/US2012/032400
Filing Date :05/04/2012
(87) International Publication No :WO 2012/138910
(61) Patent of Addition to Application Number :NA
Filing Date :NA
(62) Divisional to Application Number :NA
Filing Date :NA

(71)**Name of Applicant :**
1)RIVE TECHNOLOGY INC.
Address of Applicant :One Canal Park 4th Floor Cambridge Massachusetts 02141 U.S.A.
(72)**Name of Inventor :**
1)MARTINEZ Javier Garcia
2)SENDEROV Ernest
3)HINCHEY Richard
4)SPERONELLO Barry

(57) Abstract :
Compositions and methods for preparing mesoporous and/or mesostructured materials from low Si/Al zeolites. Various embodiments described herein relate to preparation of mesoporous and/or mesostructured zeolites via a framework modification step followed by a mesopore introduction step.

No. of Pages : 64 No. of Claims : 70

(12) PATENT APPLICATION PUBLICATION
(19) INDIA
(22) Date of filing of Application :26/09/2013
(21) Application No.8408/DELNP/2013 A
(43) Publication Date : 19/12/2014

(54) Title of the invention : DEVICE AND METHOD FOR HEART VALVE REPAIR

(51) International classification :A61F2/24,A61B17/04
(31) Priority Document No :61/471497
(32) Priority Date :04/04/2011
(33) Name of priority country :U.S.A.
(86) International Application No :PCT/IL2012/050126
Filing Date :04/04/2012
(87) International Publication No :WO 2012/137208
(61) Patent of Addition to Application Number :NA
Filing Date :NA
(62) Divisional to Application Number :NA
Filing Date :NA

(71)**Name of Applicant :**
1)THE MEDICAL RESEARCH INFRASTRUCTURE AND HEALTH SERVICES FUND OF THE TEL AVIV MEDICAL CENTER
Address of Applicant :6 Weitzman Street 64239 Tel Aviv Israel
(72)**Name of Inventor :**
1)KUDLIK Nachman
2)PEVNAY Demitry

(57) Abstract :
The invention provides a device (50) and system for treating a heart valve having an anchor (54 56) and one or more sutures attached to the anchor. The anchor has an expanded deployed configuration and a low caliber undeployed configuration. A delivery in a heart includes catheter and a needle slidable in the lumen of the catheter. The distal end of the catheter is inserted through the myocardium of the heart until the catheter tip is juxtaposed to the underside of the valve leaflet to be treated. The leaflet is then pierced with tip of the needle. The needle is pushed until the anchor in its undeployed configuration passes through the needle tip and is released from the catheter. The anchor is then brought to its deployed configuration on one or both surfaces of the valve leaflet.

No. of Pages : 23 No. of Claims : 13

(12) PATENT APPLICATION PUBLICATION
(19) INDIA
(22) Date of filing of Application :17/09/2013
(21) Application No.8122/DELNP/2013 A
(43) Publication Date : 19/12/2014

(54) Title of the invention : CUTTING INSTRUMENT

(51) International classification :A61B17/16
(31) Priority Document No :2011170653
(32) Priority Date :11/03/2011
(33) Name of priority country :Japan
(86) International Application No :PCT/US2012/028750
Filing Date :12/03/2012
(87) International Publication No :WO 2012/125546
(61) Patent of Addition to Application Number :NA
Filing Date :NA
(62) Divisional to Application Number :NA
Filing Date :NA

(71)**Name of Applicant :**
1)SMITH & NEPHEW INC.
Address of Applicant :1450 Brooks Road Memphis TN 38116 U.S.A.
(72)**Name of Inventor :**
1)TAKEUCHI Yoshiro

(57) Abstract :
A cutting instrument including: an elongated member including a tubular portion and a shaft like portion inserted in the tubular portion; a blade including two edges the blade being provided at an end of the elongated member; an operation portion moving the tubular portion and the shaft like portion relative to each other; and a motion mechanism that converts a relative movement of the tubular portion and the shaft like portion resulting from an operation of the operation portion into pivoting of the blade between a housed position and a projected position.

No. of Pages : 51 No. of Claims : 8

(12) PATENT APPLICATION PUBLICATION
(19) INDIA
(22) Date of filing of Application :26/09/2013
(21) Application No.8410/DELNP/2013 A
(43) Publication Date : 19/12/2014

(54) Title of the invention : A BEAM AND METHOD FOR REINFORCING CONCRETE SLABS

(51) International classification :E04B5/00,E04B5/40,E04B5/36
(31) Priority Document No :2011901064
(32) Priority Date :23/03/2011
(33) Name of priority country :Australia
(86) International Application No :PCT/AU2012/000307
Filing Date :23/03/2012
(87) International Publication No :WO 2012/126065
(61) Patent of Addition to Application Number :NA
Filing Date :NA
(62) Divisional to Application Number :NA
Filing Date :NA

(71)**Name of Applicant :**
1)ENTEK PTY LTD
Address of Applicant :Suite 8 82 86 Pacific Highway St. Leonards New South Wales 2065 Australia
(72)**Name of Inventor :**
1)MANNING Mark Allan

(57) Abstract :
A beam for reinforcing a concrete slab the beam including a channel for receiving concrete mix therein and the beam adapted to receive at least one anchoring element such that the at least one anchoring element protrudes into the channel wherein the at least one anchoring element is for engaging the concrete mix such that once the concrete mix hardens the at least one element contributes to engagement between the beam and concrete slab.

No. of Pages : 24 No. of Claims : 20

(12) PATENT APPLICATION PUBLICATION
(19) INDIA
(22) Date of filing of Application :26/09/2013
(21) Application No.8411/DELNP/2013 A
(43) Publication Date : 19/12/2014

(54) Title of the invention : METHOD FOR MANUFACTURING CONTINUOUS COMPOSITE TUBE APPARATUS FOR MANUFACTURING CONTINUOUS COMPOSITE TUBE

(51) International classification :B29D23/00,B29C35/00,B29C53/64
(31) Priority Document No :2006335
(32) Priority Date :03/03/2011
(33) Name of priority country :Netherlands
(86) International Application No :PCT/NL2012/050133
Filing Date :05/03/2012
(87) International Publication No :WO 2012/118378
(61) Patent of Addition to Application Number :NA
Filing Date :NA
(62) Divisional to Application Number :NA
Filing Date :NA

(71)**Name of Applicant :**
1)AIRBORNE INTERNATIONAL B.V.
Address of Applicant :Laan van Ypenburg 70 78 NL 2497 GB s Gravenhage Netherlands
(72)**Name of Inventor :**
1)KREMERS Marcus Antonius Ivonne

(57) Abstract :
Method for manufacturing a continuous composite tube comprising translating a tube liner through a manufacturing station wherein the manufacturing station comprises a winding station and a consolidation station located at a distance downstream of the winding station; winding a composite tape on the tube liner at the winding station for forming a tape layer; consolidating the composite tape on the tube liner at a consolidation zone of the consolidation station by pressing and heating to the tape.

No. of Pages : 23 No. of Claims : 8

(12) PATENT APPLICATION PUBLICATION
(19) INDIA
(22) Date of filing of Application :26/09/2013
(21) Application No.8412/DELNP/2013 A
(43) Publication Date : 19/12/2014

(54) Title of the invention : CABLE STRAIN RELIEF CLAMPING DEVICES AND METHODS FOR USING THE SAME

(51) International classification :G02B6/44
(31) Priority Document No :61/449872
(32) Priority Date :07/03/2011
(33) Name of priority country :U.S.A.
(86) International Application No :PCT/US2012/027171
Filing Date :01/03/2012
(87) International Publication No :WO 2012/121955
(61) Patent of Addition to Application Number :NA
Filing Date :NA
(62) Divisional to Application Number :NA
Filing Date :NA

(71)**Name of Applicant :**
1)TYCO ELECTRONICS CORPORATION
Address of Applicant :1050 Westlakes Drive Berwyn Pennsylvania 19312 U.S.A.
(72)**Name of Inventor :**
1)THOMPSON Roy Keller
2)CHEN Chien An

(57) Abstract :
A clamping device for connecting a cable to a strain relief member includes a housing having a retention member extending therefrom. The retention member is configured to be inserted in a mating opening in the strain relief member and to be secured thereto. A connector is configured to connect the cable to the housing.

No. of Pages : 30 No. of Claims : 15

(12) PATENT APPLICATION PUBLICATION
(19) INDIA
(22) Date of filing of Application :26/09/2013
(21) Application No.8413/DELNP/2013 A
(43) Publication Date : 19/12/2014

(54) Title of the invention : HOMEOPATHIC THERAPEUTIC METHOD AND COMPOSITIONS

(51) International classification	:A61K36/28,A61K35/56,A61K36/38
(31) Priority Document No	:61/448913
(32) Priority Date	:03/03/2011
(33) Name of priority country	:U.S.A.
(86) International Application No	:PCT/US2012/027546
Filing Date	:02/03/2012
(87) International Publication No	:WO 2012/119102
(61) Patent of Addition to Application Number	:NA
Filing Date	:NA
(62) Divisional to Application Number	:NA
Filing Date	:NA

(71)**Name of Applicant :**
1)POLICH Nancy Josephine
Address of Applicant :35 East Elm Street Chicago Illinois 60611 U.S.A.
(72)**Name of Inventor :**
1)POLICH Nancy Josephine

(57) Abstract :
The present invention relates to compositions including a homeopathic aqueous substance active (HASA) and at least one hydrophilic gelling agent the HASA comprises a homeopathic compound at a potency of 30C or higher and an uninhibited aqueous composition. The present invention also relates to methods of preparing a hydrophilic HASA gel matrix. The method includes combining a homeopathic compound and an uninhibited aqueous composition to produce a HASA; combining the HASA with at least one hydrophilic gelling agent; and thereafter forming the hydrophilic HASA gel matrix by use of at least one of a thickening agent a crosslinking agent or a polymerization agent.

No. of Pages : 73 No. of Claims : 44

(12) PATENT APPLICATION PUBLICATION
(19) INDIA
(22) Date of filing of Application :26/09/2013
(21) Application No.8414/DELNP/2013 A
(43) Publication Date : 19/12/2014

(54) Title of the invention : ALARM TRIGGERING DEVICE FOR A SECURITY SYSTEM

(51) International classification :G08B25/10,G08B29/04,G08B29/06
(31) Priority Document No :11/00946
(32) Priority Date :31/03/2011
(33) Name of priority country:France
(86) International Application No :PCT/FR2012/000114
Filing Date :29/03/2012
(87) International Publication No :WO 2012/131190
(61) Patent of Addition to Application Number :NA
Filing Date :NA
(62) Divisional to Application Number :NA
Filing Date :NA

(71)**Name of Applicant :**
1)FINS‰CUR
Address of Applicant :52 rue Paul Lescop F 92000 Nanterre France
(72)**Name of Inventor :**
1)PICHARD Laurent
2)DIMARCO Stphane
3)LEWINER Jacques

(57) Abstract :
Alarm triggering device (200) for a security system (ID), the alarm triggering device (200) comprising an interface (210) arranged so as to connect the alarm triggering device (200) to a central monitoring station (100) of the security system (10) 5 by means of a wireless connection (50) ; means (220) for triggering an alarm in the case of detection of a predetermined event; supply means (230) for enabling the power supply of the alarm triggering system from a supply source; fault detection means (240) for detecting an operating fault 10 of the triggering device; and signaling means (250) for signaling, to the alarm triggering device (200), the operating fault of the alarm triggering device (200) .

No. of Pages : 23 No. of Claims : 21

(12) PATENT APPLICATION PUBLICATION
(19) INDIA
(22) Date of filing of Application :24/09/2013
(21) Application No.8336/DELNP/2013 A
(43) Publication Date : 19/12/2014

(54) Title of the invention : METHOD AND DEVICE FOR CONTROL COMMUNICATION BETWEEN COUPLED TRAIN COMPONENTS

(51) International classification :B61L15/00
(31) Priority Document No :10 2011 007 588.7
(32) Priority Date :18/04/2011
(33) Name of priority country :Germany
(86) International Application No :PCT/EP2012/056443
Filing Date :10/04/2012
(87) International Publication No :WO 2012/143260
(61) Patent of Addition to Application Number :NA
Filing Date :NA
(62) Divisional to Application Number :NA
Filing Date :NA

(71)**Name of Applicant :**
1)SIEMENS AKTIENGESELLSCHAFT
Address of Applicant :Wittelsbacherplatz 2 80333 M¼nchen Germany
(72)**Name of Inventor :**
1)BEYER Ralf
2)FALK Rainer

(57) Abstract :
A method for control communication between coupled train components is described wherein mechanical and electrical couplings as well as means for exchanging data are present wherein when a first train component is coupled to at least one further train component the at least one further train component is identified and filtering for a permissible data communication is performed as a function of the identification in that only selected data traffic is permitted. Furthermore a device for control communication between coupled train components is described wherein the train buses (5) thereof are connected via an electrical coupling (EK) and the data communication to the respective other train component is conducted via at least one gateway (GW) with at least one Ethernet interface as well as via at least one interface for connection of each component network (7) with the result that the data communication of a filter policy/rule is permitted or blocked.

No. of Pages : 23 No. of Claims : 17

(12) PATENT APPLICATION PUBLICATION
(19) INDIA
(22) Date of filing of Application :24/09/2013
(21) Application No.8337/DELNP/2013 A
(43) Publication Date : 19/12/2014

(54) Title of the invention : SYNCHRONIZING DIGITAL CONTENT

(51) International classification :G06F15/16
(31) Priority Document No :13/070313
(32) Priority Date :23/03/2011
(33) Name of priority country :U.S.A.
(86) International Application No :PCT/US2012/030186
Filing Date :22/03/2012
(87) International Publication No :WO 2012/129438
(61) Patent of Addition to Application Number :NA
Filing Date :NA
(62) Divisional to Application Number :NA
Filing Date :NA

(71)**Name of Applicant :**
1)AUDIBLE INC.
Address of Applicant :1 Washington Park 16th Floor Newark NJ 07102 U.S.A.
2)AMAZON TECHNOLOGIES INC.
(72)**Name of Inventor :**
1)STORY Guy A. Jr.
2)TOLEA Mugur F.
3)LESTER Kevin S.
4)GALKIN Alexander
5)ISRAEL Bruce N.
6)SNODGRASS Ryan J.

(57) Abstract :
Aspects of the present disclosure relate to one or more configured computing systems identifying when decoupled content includes companion content that can be synchronously presented. Once a content match is identified a device to receive synchronization information can also be identified. The synchronization information can enable one or more devices to synchronously present companion content.

No. of Pages : 53 No. of Claims : 15

(12) PATENT APPLICATION PUBLICATION
(19) INDIA
(22) Date of filing of Application :24/09/2013
(21) Application No.8338/DELNP/2013 A
(43) Publication Date : 19/12/2014

(54) Title of the invention : DEVICE AND METHOD FOR HEATING EXHAUST GASES OF AN INTERNAL COMBUSTION ENGINE

(51) International classification :F01N3/30,F01N3/36,F01N9/00
(31) Priority Document No :10 2011 007 461.9
(32) Priority Date :15/04/2011
(33) Name of priority country :Germany
(86) International Application No :PCT/EP2012/053153
Filing Date :24/02/2012
(87) International Publication No :WO 2012/139801
(61) Patent of Addition to Application Number :NA
Filing Date :NA
(62) Divisional to Application Number :NA
Filing Date :NA

(71)**Name of Applicant :**
1)ROBERT BOSCH GMBH
Address of Applicant :Postfach 30 02 20 70442 Stuttgart Germany
(72)**Name of Inventor :**
1)HEILIG Dirk
2)BRESSLER Harald
3)DAMSON Bjoern

(57) Abstract :
The invention relates to a device and a method for heating exhaust gases of an internal combustion engine, having a combustion chamber (10), a fuel supply (20) for supplying a preferably liquid fuel (22) and a supply device (30) for supplying a gas (32) promoting combustion into the combustion chamber (10) via two inlet points (13, 15) which are spaced apart from each other, wherein means (45) are provided which, in dependence on the volume of the supplied fuel (22), set the ratio between a first mass flow ml of the gas (32) promoting combustion and a second mass flow m2 of the gas (32) promoting combustion and a distribution of the mass flows ml, m2 via the two inlet points (13, 15) into the combustion chamber (10).

No. of Pages : 16 No. of Claims : 16

(12) PATENT APPLICATION PUBLICATION
(19) INDIA
(22) Date of filing of Application :24/09/2013
(21) Application No.8339/DELNP/2013 A
(43) Publication Date : 19/12/2014

(54) Title of the invention : METALLIC NANOPARTICLE BIOCIDE IN INDUSTRIAL APPLICATIONS

(51) International classification :C09K8/74
(31) Priority Document No :61/446599
(32) Priority Date :25/02/2011
(33) Name of priority country :U.S.A.
(86) International Application No :PCT/US2012/024545
Filing Date :09/02/2012
(87) International Publication No :WO 2012/115792
(61) Patent of Addition to Application Number :NA
Filing Date :NA
(62) Divisional to Application Number :NA
Filing Date :NA

(71)**Name of Applicant :**
1)PURE LIQUID SOLUTIONS LLC
Address of Applicant :9143 Pebble Creek Loop Eagle Mountain UT 84005 U.S.A.
(72)**Name of Inventor :**
1)MCCUBBINS Ray Woodrow
2)WHITING Nathan Jared
3)SHILLREFF Fred Vincent
4)MILLER Larry George
5)MILLER Theron Glade

(57) Abstract :
A method includes providing a measured dose amount of manufactured metallic nanoparticle material and adding the measured dose amount of the manufactured metallic nanoparticle material to a carrier material for pre treatment of the carrier material prior to use of the carrier material and the manufactured metallic nanoparticle material in the sub surface earth activity. Another method includes accessing a sub surface earth opening that is used in conjunction with the sub surface earth activity introducing an amount of manufactured metallic nanoparticle material into the sub surface earth opening and treating a sub surface earth condition present at a sub surface earth location accessible via the sub surface earth opening.

No. of Pages : 40 No. of Claims : 37

(12) PATENT APPLICATION PUBLICATION
(19) INDIA
(22) Date of filing of Application :26/09/2013
(21) Application No.8417/DELNP/2013 A
(43) Publication Date : 19/12/2014

(54) Title of the invention : METHOD OF MODIFYING RADIATION CHARACTERISTIC OF AN EXCITED EMITTER

(51) International classification :G01N21/64
(31) Priority Document No :11162476.3
(32) Priority Date :14/04/2011
(33) Name of priority country :EPO
(86) International Application No :PCT/EP2012/056749
Filing Date :13/04/2012
(87) International Publication No :WO 2012/140184
(61) Patent of Addition to Application Number :NA
Filing Date :NA
(62) Divisional to Application Number :NA
Filing Date :NA

(71)**Name of Applicant :**
1)BOEHRINGER INGELHEIM INTERNATIONAL GMBH
Address of Applicant :Binger Strasse 173 55216 Ingelheim am Rhein Germany
(72)**Name of Inventor :**
1)ELSAYAD Kareem
2)HEINZE Katrin
3)URICH Alexander

(57) Abstract :
A method of modifying a radiation characteristic of an excited emitter (2) and a layer structure (1) therefore wherein the emitter (2) is placed in the vicinity of a layer structure (1) comprising a metal material such that the emitter (2) couples to a surface state of the layer structure (1) in particular a surface plasmon polariton which modifies the radiation characteristic of the emitter (2) wherein the layer structure (1) comprises a metal layer (3) sandwiched between a non metal superstrate layer (4) and a non metal substrate layer (5) wherein at least the metal layer (3) and the superstrate layer (4) are separated by a smooth interface (8) with a root mean square roughness equal to or less than 1 nanometer and wherein the metal layer (3) has a thickness of between 1/100 and 1/20 in relation to an emission wavelength ( ) of the emitter (2).

No. of Pages : 38 No. of Claims : 13

(12) PATENT APPLICATION PUBLICATION
(19) INDIA
(22) Date of filing of Application :25/09/2013
(21) Application No.8373/DELNP/2013 A
(43) Publication Date : 19/12/2014

(54) Title of the invention : PRESSURE SWIRL FLOW INJECTOR WITH REDUCED FLOW VARIABILITY AND RETURN FLOW

(51) International classification :F01N3/28,B05B1/02
(31) Priority Document No :13/164976
(32) Priority Date :21/06/2011
(33) Name of priority country :U.S.A.
(86) International Application No :PCT/US2012/040864
Filing Date :05/06/2012
(87) International Publication No :WO 2012/177381
(61) Patent of Addition to Application Number :NA
Filing Date :NA
(62) Divisional to Application Number :NA
Filing Date :NA

(71)**Name of Applicant :**
1)TENNECO AUTOMOTIVE OPERATING COMPANY INC.
Address of Applicant :500 North Field Drive Lake Forest Illinois 60045 U.S.A.
(72)**Name of Inventor :**
1)ROESSLE Matthew L.
2)MALLIN Thomas P.
3)SIMPSON Rick
4)THOMAS Stephen
5)OLIVIER Keith
6)LOWRY John

(57) Abstract :
A reagent injector with a cartridge design has a body with a reagent inlet outlet and a swirl chamber which has an exit orifice that may be covered and uncovered by a solid movable pintle. Reagent flows through the injector when the exit orifice is covered and uncovered to cool the injector. An insulator may be disposed between the injector body and a mounting flange connectable to an exhaust system. A flow path ensures cooling of an electromagnetic actuator. Reagent may bypass an orifice swirl chamber when the pintle blocks the exit orifice. Fluid may flow between an outside diameter of a pole piece and an inside diameter of an electromagnetic actuator through an orifice chamber and return through a central bore housing a solid pintle around which fluid may flow. Different inner injector body passages may direct fluid into an orifice distribution chamber and out to the solid pintle.

No. of Pages : 73 No. of Claims : 19

(12) PATENT APPLICATION PUBLICATION
(19) INDIA
(22) Date of filing of Application :25/09/2013
(21) Application No.8374/DELNP/2013 A
(43) Publication Date : 19/12/2014

(54) Title of the invention : BATTERIES

(51) International classification :H01M4/02
(31) Priority Document No :2011900925
(32) Priority Date :15/03/2011
(33) Name of priority country :Australia
(86) International Application No :PCT/AU2012/000266
Filing Date :15/03/2012
(87) International Publication No :WO 2012/122600
(61) Patent of Addition to Application Number :NA
Filing Date :NA
(62) Divisional to Application Number :NA
Filing Date :NA

(71)**Name of Applicant :**
1)NANO NOUVELLE PTY LTD
Address of Applicant :Unit 4 9 Cessna Street Marcoola Queensland 4564 Australia
(72)**Name of Inventor :**
1)GEORGE Peter Anthony
2)SONG Quansheng
3)EDWARDS Geoffrey Alan

(57) Abstract :
A battery electrode comprising a porous polymeric material having at least a coating of an active material applied thereto. The battery electrode may be a 3 dimensional electrode.

No. of Pages : 34 No. of Claims : 44

(12) PATENT APPLICATION PUBLICATION
(19) INDIA
(22) Date of filing of Application :25/09/2013
(21) Application No.8375/DELNP/2013 A
(43) Publication Date : 19/12/2014

(54) Title of the invention : METHOD AND APPARATUS FOR COMPACTING TUBULAR FABRICS

(51) International classification :D06C21/00
(31) Priority Document No :61/453830
(32) Priority Date :17/03/2011
(33) Name of priority country :U.S.A.
(86) International Application No :PCT/US2012/028681
Filing Date :12/03/2012
(87) International Publication No :WO 2012/125517
(61) Patent of Addition to Application Number :NA
Filing Date :NA
(62) Divisional to Application Number :NA
Filing Date :NA

(71)**Name of Applicant :**
1)TUBULAR TEXTILE MACHINERY INC.
Address of Applicant :Hargrave Road At I 85 P.O. Box 2097 Lexington NC 27293 2097 U.S.A.
(72)**Name of Inventor :**
1)WEST Mark Troy
2)MILLER Barry Defoy
3)PENDLETON Jerry Wayne

(57) Abstract :
A two stage process and apparatus for compacting tubular knitted fabrics wherein at each stage (21 23) the fabric is acted upon by cooperating feeding (20 24) and retarding (22 26) rollers spaced apart a distance greater than the thickness of the fabric. Opposite fabric sides thus cannot be in simultaneous contact with the feeding and retarding rollers at the same point along the fabric. Fabric is transferred from a feed roller to a retarding roller while opposite sides of the fabric are closely confined in a compacting zone free of contact with either roller. Fabric is longitudinally compacted during its traverse of that zone. In the second stage the rollers are reversely oriented with respect the fabric. Unlike known two stage procedures not more than 60% of the compacting effort is imparted in either one of the stages. Preferably each stage imparts about 50% of the compacting effort. Higher production speeds and superior product quality are achieved.

No. of Pages : 29 No. of Claims : 9

(12) PATENT APPLICATION PUBLICATION
(19) INDIA
(22) Date of filing of Application :27/09/2013
(21) Application No.8422/DELNP/2013 A
(43) Publication Date : 19/12/2014

(54) Title of the invention : METHOD AND DEVICE FOR SEARCHING THROUGH COLLAPSED GROUND

(51) International classification :G01S13/50,G01S7/41,G01S13/04
(31) Priority Document No :11001773
(32) Priority Date :11/03/2011
(33) Name of priority country :Sweden
(86) International Application No :PCT/SE2012/000030
Filing Date :08/03/2012
(87) International Publication No :WO 2012/125100
(61) Patent of Addition to Application Number :NA
Filing Date :NA
(62) Divisional to Application Number :NA
Filing Date :NA

(71)**Name of Applicant :**
1)TOTALF–RSVARETS FORSKNINGSINSTITUT
Address of Applicant :S 164 90 Stockholm Sweden
(72)**Name of Inventor :**
1)ABRAHAMSON Staffan

(57) Abstract :
The invention relates to a device and a method for determining whether a living person has been buried in collapsed ground. The device consists of a rod provided with a receiver unit and a signal processing unit. The receiver unit is intended to receive reflected radar signals transmitted form a radar transmitting antenna and transfer these signals to the signal processing unit. The signal processing unit which is provided with specific detection units determines whether the received signal have been Doppler shifted. By determining this the device can decide whether the Doppler shift depends on the moving chest of a breathing person buried alive.

No. of Pages : 19 No. of Claims : 5

(12) PATENT APPLICATION PUBLICATION
(19) INDIA
(22) Date of filing of Application :27/09/2013
(21) Application No.8423/DELNP/2013 A
(43) Publication Date : 19/12/2014

(54) Title of the invention : REVISION GLENOID DEVICE AND METHOD

(51) International classification :A61F2/40
(31) Priority Document No :13/051062
(32) Priority Date :18/03/2011
(33) Name of priority country :U.S.A.
(86) International Application No :PCT/US2012/029034
Filing Date :14/03/2012
(87) International Publication No :WO 2012/129021
(61) Patent of Addition to Application Number :NA
Filing Date :NA
(62) Divisional to Application Number :NA
Filing Date :NA

(71)**Name of Applicant :**
1)DEPUY SYNTHES PRODUCTS LLC
Address of Applicant :325 Paramount Drive Raynham MA 02767 0350 U.S.A.
(72)**Name of Inventor :**
1)DE WILDE Lieven
2)LAPPIN Kyle

(57) Abstract :
A kit for use in revision shoulder arthroplasty has at least one revision glenoid component and a reamer for preparing a cavity in a glenoid. The revision glenoid component has a base component with a lip defining a first circular outer periphery and a bottom surface defining a second circular outer periphery. The reamer has a reamer portion shaped complementary to and slightly larger than the base component such that when a cavity is formed in the glenoid with the reamer the base component fits within the cavity without being press fit into the cavity.

No. of Pages : 29 No. of Claims : 10

(12) PATENT APPLICATION PUBLICATION
(19) INDIA
(22) Date of filing of Application :26/09/2013
(21) Application No.8418/DELNP/2013 A
(43) Publication Date : 19/12/2014

(54) Title of the invention : COMMUNICATION METHOD AND SHAREHOLDERS MEETING VOTING RIGHT COUNTING SYSTEM

(51) International classification	:H04W28/04,G06Q10/00,G06Q10/06
(31) Priority Document No	:2011073007
(32) Priority Date	:29/03/2011
(33) Name of priority country	:Japan
(86) International Application No	:PCT/JP2012/058087
Filing Date	:28/03/2012
(87) International Publication No	:WO 2012/133504
(61) Patent of Addition to Application Number	:NA
Filing Date	:NA
(62) Divisional to Application Number	:NA
Filing Date	:NA

(71)**Name of Applicant :**
1)SAITO Shoji
Address of Applicant :12 4 Asakusabashi 4 chome Taito ku Tokyo 1110053 Japan
(72)**Name of Inventor :**
1)SAITO Shoji

(57) Abstract :
In a wireless communication system (1) provided with a plurality of communication terminals (2) and a management terminal (3) when receiving information data (400) transmitted by each of a plurality of communication terminals (2) the management terminal (3) identifies the communication terminal (2) which is a source of the information data (400) to transmit a data receipt confirmation to the communication terminal (2) and each of the plurality of communication terminals (2) repeatedly transmits information data (400) to the management terminal (3) until receiving the data receipt confirmation and stops transmitting the information data (400) until receiving a retransmission request from the management terminal (3) after the lapse of a predetermined time period from when the information data (400) is first transmitted or after a predetermined time. According to such a communication method it is possible to receive all data to complete communication in a short period of time even in the case where data is transmitted from a large number of transmitting terminals to a receiving terminal by wireless communication.

No. of Pages : 57 No. of Claims : 13

(12) PATENT APPLICATION PUBLICATION
(19) INDIA
(22) Date of filing of Application :26/09/2013
(21) Application No.8419/DELNP/2013 A
(43) Publication Date : 19/12/2014

(54) Title of the invention : CURRENT COLLECTION BOX

(51) International classification :G05F1/67,H01L31/04
(31) Priority Document No :2011076299
(32) Priority Date :30/03/2011
(33) Name of priority country :Japan
(86) International Application No :PCT/JP2012/056804
Filing Date :16/03/2012
(87) International Publication No :WO 2012/132949
(61) Patent of Addition to Application Number :NA
Filing Date :NA
(62) Divisional to Application Number :NA
Filing Date :NA

(71)**Name of Applicant :**
1)SANYO Electric Co. Ltd.
Address of Applicant :5 5 Keihan Hondori 2 chome Moriguchi shi Osaka 5708677 Japan
(72)**Name of Inventor :**
1)MIYAUCHI Taku
2)ANDO Takashi

(57) Abstract :
A current collection box (4) is provided with lines (La to Ld) which are connected to each of a plurality of solar cells (1a to 1d) and boosting circuits (41a to 41d) which are interposed upon each of at least two or more lines of the plurality of lines (La to Ld) so as to boost the output voltage of the solar cells (1a to 1d) and outputs the output of each of the lines (La to Ld) together. In the current collection box (4) each of the boosting circuits (41a to 41d) starts MPPT operation which operates so that the output power of the solar cells (1a to 1d) is maximized with different periods each.

No. of Pages : 39 No. of Claims : 5

(12) PATENT APPLICATION PUBLICATION
(19) INDIA
(22) Date of filing of Application :27/09/2013
(21) Application No.8420/DELNP/2013 A
(43) Publication Date : 19/12/2014

(54) Title of the invention : ACTUATOR CONTROL SYSTEM

(51) International classification :B64C13/50,G05D1/00
(31) Priority Document No :1105275.0
(32) Priority Date :29/03/2011
(33) Name of priority country :U.K.
(86) International Application No :PCT/GB2012/050627
Filing Date :22/03/2012
(87) International Publication No :WO 2012/131330
(61) Patent of Addition to Application Number :NA
Filing Date :NA
(62) Divisional to Application Number :NA
Filing Date :NA

(71)**Name of Applicant :**
1)BAE SYSTEMS plc
Address of Applicant :6 Carlton Gardens London SW1Y 5AD U.K.
(72)**Name of Inventor :**
1)WHITE Nicholas James
2)MORGAN Stephen Richard
3)CLARKSTONE John Kenneth

(57) Abstract :
An actuator control system(9) for coupling to one or more flight control computers (FCCs) (11 12 13 14); comprising:apparatus for controlling an aerodynamic control surface in response to commands received from one or more FCCs and integrated with the controlling apparatus a failure protection system (6) comprising apparatus arranged to provide at least one of the following functionalities: a servo monitor functionality (30) a command monitor functionality (32) and a loop closure functionality (36). Thus in the overall flight control system (1) some or all of the elements of the failure protection system are located in the actuator control stage.

No. of Pages : 36 No. of Claims : 15

(12) PATENT APPLICATION PUBLICATION
(19) INDIA
(22) Date of filing of Application :27/09/2013
(21) Application No.8421/DELNP/2013 A
(43) Publication Date : 19/12/2014

(54) Title of the invention : DISPENSER WITH USE BASED CONTENT DELIVERY

(51) International classification :G09B19/00
(31) Priority Document No :13/073071
(32) Priority Date :28/03/2011
(33) Name of priority country :U.S.A.
(86) International Application No :PCT/US2012/025862
Filing Date :21/02/2012
(87) International Publication No :WO 2012/134660
(61) Patent of Addition to Application Number :NA
Filing Date :NA
(62) Divisional to Application Number :NA
Filing Date :NA

(71)**Name of Applicant :**
1)GOJO INDUSTRIES INC.
Address of Applicant :One GOJO Plaza Suite 500 P.O. Box 991 Akron Ohio 44309 U.S.A.
(72)**Name of Inventor :**
1)WEGELIN Jackson W.
2)OKEEFE JR. Patrick J.
3)MOORE Andrew A.

(57) Abstract :
A dispenser with use based content delivery includes an indicator to present audio and/or video content that is delivered from a remote computer via a wired or wireless network. In addition the dispenser is configured to monitor various operation parameters associated with the dispenser as well as the physical attributes of its users. The dispenser uses such data to select informational content that targets the needs of each specific user so as to communicate informational content in a highly effective manner.

No. of Pages : 15 No. of Claims : 20

(12) PATENT APPLICATION PUBLICATION
(19) INDIA
(22) Date of filing of Application :25/09/2013
(21) Application No.8382/DELNP/2013 A
(43) Publication Date : 19/12/2014

(54) Title of the invention : SWITCHED MODE POWER SUPPLY WITH A SIMPLIFIED START UP SUPPLY

(51) International classification :H02M3/335,H02M1/36
(31) Priority Document No :NA
(32) Priority Date :NA
(33) Name of priority country :NA
(86) International Application No :PCT/EP2011/056012
Filing Date :15/04/2011
(87) International Publication No :WO 2012/139654
(61) Patent of Addition to Application Number :NA
Filing Date :NA
(62) Divisional to Application Number :NA
Filing Date :NA

(71)**Name of Applicant :**
1)TELEFONAKTIEBOLAGET LM ERICSSON (PUBL)
Address of Applicant :S 164 83 Stockholm Sweden
(72)**Name of Inventor :**
1)PERSSON Oscar
2)APPELBERG Mikael
3)LESKOVEC Marko

(57) Abstract :
A switched mode power supply (SMPS) is disclosed in which a simple primary side controller is used to send a single pulse of energy to the secondary side to switch on an output voltage controller. The pulse is sent across the main power train and a filtering arrangement is provided on the secondary side to minimise the energy at the output of the SMPS while maximising the energy supplied to the output voltage controller. Advantageously the SMPS is configured such that the maximum amount of energy transferred from the primary side to the secondary side during a start up operation is inherently limited. Protection against short circuit conditions and malfunctions is therefore provided without requiring complicated circuitry.

No. of Pages : 35 No. of Claims : 18

(12) PATENT APPLICATION PUBLICATION
(19) INDIA
(22) Date of filing of Application :25/09/2013
(21) Application No.8383/DELNP/2013 A
(43) Publication Date : 19/12/2014

(54) Title of the invention : POWER CONDITIONER SYSTEM

(51) International classification :G05F1/67,H02J3/38,H02M3/155
(31) Priority Document No :2011076301
(32) Priority Date :30/03/2011
(33) Name of priority country :Japan
(86) International Application No :PCT/JP2012/056803
Filing Date :16/03/2012
(87) International Publication No :WO 2012/132948
(61) Patent of Addition to Application Number :NA
Filing Date :NA
(62) Divisional to Application Number :NA
Filing Date :NA

(71)**Name of Applicant :**
1)SANYO Electric Co. Ltd.
Address of Applicant :5 5 Keihan Hondori 2 chome Moriguchi shi Osaka 5708677 Japan
(72)**Name of Inventor :**
1)MIYAUCHI Taku
2)ANDO Takashi

(57) Abstract :
In the present invention first boosting circuits (41a to 41d) are interposed upon each of direct current power lines (La to Ld). The step up ratios of the first boosting circuits (41a to 41d) for each iteration of a first cycle are variably controlled during a first period so that the generated power of the corresponding solar cell strings (1a to 1d) is maximized and the step up ratios during a second period are controlled so as to be maintained at a uniform value. The total amount of time of the first period and the second period is made to correspond to the first cycle.

No. of Pages : 51 No. of Claims : 18

(12) PATENT APPLICATION PUBLICATION
(19) INDIA
(22) Date of filing of Application :25/09/2013
(21) Application No.8384/DELNP/2013 A
(43) Publication Date : 19/12/2014

(54) Title of the invention : SYSTEM FOR CALIBRATING AND MEASURING MECHANICAL STRESS IN AT LEAST A PART OF A RAIL

(51) International classification :G01L1/12,G01L5/00,G01L25/00
(31) Priority Document No :2006395
(32) Priority Date :15/03/2011
(33) Name of priority country :Netherlands
(86) International Application No :PCT/NL2012/050153
Filing Date :13/03/2012
(87) International Publication No :WO 2012/125029
(61) Patent of Addition to Application Number :NA
Filing Date :NA
(62) Divisional to Application Number :NA
Filing Date :NA

(71)**Name of Applicant :**
1)GRONTMIJ NEDERLAND B.V.
Address of Applicant :De Holle Bilt 22 NL 3732 HM De Bilt Netherlands
(72)**Name of Inventor :**
1)NOBACK Herman Roelof

(57) Abstract :
The invention relates to a system for calibrating and measuring the magnetizability of at least a part of a rail for instance a rail for guiding means of transport. The system includes a magnetic field generator (MFP) for generating a changing magnetic field transverse to a longitudinal direction of the rail. The magnetic field generator comprises a substantially saddle shaped transmitter coil (Wl) arranged to be placed partly around the rail. The system further includes an induction detector (M5) for measuring a transverse induction. The system may further include a magnetic field generator for generating a changing magnetic field in the longitudinal direction an induction detector arranged for measuring a longitudinal induction and a processing unit arranged for determining a reference induction on the basis of the transverse induction and determining a longitudinal mechanical stress in rail on the basis of the longitudinal induction and the reference induction.

No. of Pages : 49 No. of Claims : 43

(12) PATENT APPLICATION PUBLICATION
(19) INDIA
(22) Date of filing of Application :26/09/2013
(21) Application No.8385/DELNP/2013 A
(43) Publication Date : 19/12/2014

(54) Title of the invention : COORDINATE POSITIONING MACHINE CONTROLLER

(51) International classification :G01B21/04
(31) Priority Document No :11250394.1
(32) Priority Date :28/03/2011
(33) Name of priority country :EPO
(86) International Application No :PCT/GB2012/000271
Filing Date :26/03/2012
(87) International Publication No :WO 2012/131291
(61) Patent of Addition to Application Number :NA
Filing Date :NA
(62) Divisional to Application Number :NA
Filing Date :NA

(71)**Name of Applicant :**
1)RENISHAW PLC
Address of Applicant :New Mills Wotton under Edge Gloucestershire GL12 8JR U.K.
(72)**Name of Inventor :**
1)McMURTRY David Roberts
2)McFARLAND Geoffrey
3)BRECKON Matthew James

(57) Abstract :
A coordinate positioning apparatus comprising: a coordinate positioning machine having a measuring probe for interacting with an artefact to obtain measurement data regarding the artefact. The measuring probe and artefact are moveable relative to each other in at least one machine degree of freedom. The apparatus further comprises a hand held device moveable in free space in a plurality of device degrees of freedom for controlling movement of the measurement probe relative to the artefact. The hand held device comprises at least one motion sensor for sensing movement of the hand held device in free space. The apparatus is configured such that the relative movement of the measurement probe and artefact is controlled by said movement of the hand held device in free space.

No. of Pages : 56 No. of Claims : 15

(12) PATENT APPLICATION PUBLICATION
(19) INDIA
(22) Date of filing of Application :24/09/2013
(21) Application No.8331/DELNP/2013 A
(43) Publication Date : 19/12/2014

(54) Title of the invention : SILICONE POLYETHERIMIDE COPOLYMERS

(51) International classification :C08L83/10
(31) Priority Document No :13/105575
(32) Priority Date :11/05/2011
(33) Name of priority country :U.S.A.
(86) International Application No :PCT/US2012/037339
Filing Date :10/05/2012
(87) International Publication No :WO 2012/154966
(61) Patent of Addition to Application Number :NA
Filing Date :NA
(62) Divisional to Application Number :NA
Filing Date :NA

(71)**Name of Applicant :**
1)SABIC INNOVATIVE PLASTICS IP B.V.
Address of Applicant :Plasticslaan 1 NL 4612 PX Bergen op Zoom Netherlands
(72)**Name of Inventor :**
1)GALLUCCI Robert Russell
2)BHANDARI Yashpal J.

(57) Abstract :
The hydrolysis resistance of silicone polyetherimide copolymers is improved by addition of polyepoxide compounds hydrotalcite compounds of combinations thereof. An article made from the composition retains at least 83% of its molecular weight (Mw) were exposed to steam in an autoclave at 115°C for 3 and 7 days.

No. of Pages : 30 No. of Claims : 16

(12) PATENT APPLICATION PUBLICATION
(19) INDIA
(22) Date of filing of Application :24/09/2013
(21) Application No.8332/DELNP/2013 A
(43) Publication Date : 19/12/2014

(54) Title of the invention : AUXILIARY VALVE CONTROLLED SELF CLEANING MAIN VALVE

(51) International classification :F16K31/24,F16K31/524
(31) Priority Document No :P1100179
(32) Priority Date :01/04/2011
(33) Name of priority country :Hungary
(86) International Application No :PCT/HU2012/000024
Filing Date :30/03/2012
(87) International Publication No :WO 2012/140457
(61) Patent of Addition to Application Number :NA
Filing Date :NA
(62) Divisional to Application Number :NA
Filing Date :NA

(71)**Name of Applicant :**
1)BERY INTELLECTUAL PROPERTIES
Address of Applicant :Szellemi Tulajdonjogokat Hasznost³ s Kezel Korl¡tolt Felelssg¼ T¡rsas¡g Andr¡ssy ºt 112. H 1062 Budapest Hungary
(72)**Name of Inventor :**
1)BEREZNAI J³zsef

(57) Abstract :
Auxiliary valve controlled self cleaning main valve with mechanical operating means. The valve body (1) of the main valve has an inlet (2) and an outlet (3) interconnected through a flow through opening and a movable piston (6) having a main closing element (8) at one of its sides and a brake O ring (9) at its other side. In the control chamber (5) an auxiliary valve (4) with a control valve stem (7) is provided. Between the piston (6) and the auxiliary valve (4) a compressible spring (12) is positioned. The mechanical operating means is provided with a wedge travel path and adapted to press the control valve stem (7) when force is applied externally and to keep it pressed in without applying external force further it is adapted to release it when force is applied externally and to keep it released without applying external force.

No. of Pages : 17 No. of Claims : 10

(12) PATENT APPLICATION PUBLICATION
(19) INDIA
(22) Date of filing of Application :27/09/2013
(21) Application No.8435/DELNP/2013 A
(43) Publication Date : 19/12/2014

(54) Title of the invention : PROCESS OF SEPARATING CHIRAL ISOMERS OF CHROMAN COMPOUNDS AND THEIR DERIVATIVES AND PRECURSORS

(51) International classification	:C07B55/00,C07B57/00,A61K31/355
(31) Priority Document No	:11165442.2
(32) Priority Date	:10/05/2011
(33) Name of priority country	:EPO
(86) International Application No	:PCT/EP2012/058415
Filing Date	:08/05/2012
(87) International Publication No	:WO 2012/152779
(61) Patent of Addition to Application Number	:NA
Filing Date	:NA
(62) Divisional to Application Number	:NA
Filing Date	:NA

(71)**Name of Applicant :**
1)DSM IP Assets B.V.
Address of Applicant :Het Overloon 1 NL 6411 TE Heerlen Netherlands
(72)**Name of Inventor :**
1)SCHIEFER Gerhard
2)NETSCHER Thomas
3)DUCHATEAU Alexander Lucia Leonardus

(57) Abstract :
The present invention relates to a process of separating chiral isomers of chroman compounds particularly tocopherols and tocotrienols as well as the esters and intermediates thereof. It has been found that this process allows a separation of the desired isomer with a higher yield and enables the use of the non desired isomers in a very efficient way. Said process is particularly useful when implemented in an industrial process. Furthermore it has been found that this process allows using isomer mixtures as they result from traditional industrial synthesis.

No. of Pages : 60 No. of Claims : 19

(12) PATENT APPLICATION PUBLICATION
(19) INDIA
(22) Date of filing of Application :27/09/2013
(21) Application No.8437/DELNP/2013 A
(43) Publication Date : 19/12/2014

(54) Title of the invention : CONTEXT BASED KEYBOARD

(51) International classification :G06F3/02
(31) Priority Document No :61/452222
(32) Priority Date :14/03/2011
(33) Name of priority country :U.S.A.
(86) International Application No :PCT/IB2012/051202
Filing Date :14/03/2012
(87) International Publication No :WO 2012/123903
(61) Patent of Addition to Application Number :NA
Filing Date :NA
(62) Divisional to Application Number :NA
Filing Date :NA

(71)**Name of Applicant :**
1)SUPER DERIVATIVES INC.
Address of Applicant :545 Madison Avenue 17th Floor New York New York 10022 U.S.A.
(72)**Name of Inventor :**
1)MIRON Amihi

(57) Abstract :
Some demonstrative embodiments include devices systems and/or methods of context based keyboards. For example a virtual context based keyboard may be customized based on an input context to be provided from a user to at least one application. The input context may include a predefined combination of a plurality of context components including input elements selected from a respective plurality of predefined sets of input elements such that a context component has an input element selected from a set of input elements corresponding to the context component. The virtual keyboard may include a plurality of keyboard elements representing input elements of the plurality of sets of input elements each keyboard element representing a different input element.

No. of Pages : 48 No. of Claims : 28

(12) PATENT APPLICATION PUBLICATION
(19) INDIA
(22) Date of filing of Application :27/09/2013
(21) Application No.8438/DELNP/2013 A
(43) Publication Date : 19/12/2014

(54) Title of the invention : SEALING ASSEMBLY FOR A SWING DOOR

(51) International classification :E06B7/215
(31) Priority Document No :61/541218
(32) Priority Date :30/09/2011
(33) Name of priority country :U.S.A.
(86) International Application No :PCT/US2012/056837
Filing Date :24/09/2012
(87) International Publication No :WO 2013/048935
(61) Patent of Addition to Application Number :NA
Filing Date :NA
(62) Divisional to Application Number :NA
Filing Date :NA

(71)**Name of Applicant :**
1)WABTEC HOLDING CORP.
Address of Applicant :1001 Air Brake Avenue Wilmerding Pennsylvania 15148 U.S.A.
(72)**Name of Inventor :**
1)HEIDRICH Peter
2)GOLEMIS Frank

(57) Abstract :
A sealing assembly for sealing a gap between a swing door and a floor comprises a sealing member installed to be able to rotate from a closed position to an open position an elastically deforming member made of an elastomer composition engaged to the sealing member and a seal driving member to rotate the sealing member from the closed position to the open position when the door is opened. The elastically deforming member is deformed when the sealing member rotates from the closed position to the open position and the sealing member returns from the open position to the closed position by elastic force of the elastically deforming member when the door is closed.

No. of Pages : 13 No. of Claims : 6

(12) PATENT APPLICATION PUBLICATION
(19) INDIA
(22) Date of filing of Application :26/09/2013
(21) Application No.8386/DELNP/2013 A
(43) Publication Date : 19/12/2014

(54) Title of the invention : WHEELSETS FOR RAIL VEHICLES OR PARTS OF WHEELSETS FOR RAIL VEHICLES AND METHOD FOR COATING

(51) International classification :C08G18/32,C08G18/36,C08G18/66
(31) Priority Document No :61/484274
(32) Priority Date :10/05/2011
(33) Name of priority country :U.S.A.
(86) International Application No :PCT/EP2012/058650
Filing Date :10/05/2012
(87) International Publication No :WO 2012/152870
(61) Patent of Addition to Application Number :NA
Filing Date :NA
(62) Divisional to Application Number :NA
Filing Date :NA

(71)**Name of Applicant :**
1)BASF COATINGS GMBH
Address of Applicant :Glasuritstrae 1 48165 M¼nster Germany
(72)**Name of Inventor :**
1)KLAUER Jens
2)WARNTJES Egon
3)BUCK Klaus
4)H–GELE Eugen
5)GAST Achim

(57) Abstract :
The invention relates to wheelsets provided with a cured coating produced from a 2-component polyurethane coating material for trackbound vehicles or parts of these. The coating is produced via application and curing of a coating composition which comprises the following constituents: component A comprising 10 a1) from 18 to 30% by weight of a polyether polyol with a hydroxy number of from 300 to 500 mg KOH/g, determined to ASTM D1209, a2) from 38 to 60% by weight of castor oil, a3) from 0.6 to 2.0% by weight of at least one di- or polyamine, a4) from 5.6 to 9.0% by weight of trizinc bis(orthophosphate), 15 a5) from 2.2 to 3.5% by weight of zinc oxide and/or zinc phosphate, a6) from 0.05 to 0.4% by weight of a catalyst which catalyzes urethane formation, where the percentage by weight data are based on the total mass of the coating composition, and as component B, one or more di- and/or polyisocyanates in an amount which 20 corresponds to a molar ratio of from 0.6:1 to 1.2:1 of the isocyanate groups to the hydroxy groups of the constituents a1) and a2). The invention also relates to a process for coating wheelsets and parts of these with use of the abovementioned coating composition.

No. of Pages : 13 No. of Claims : 15

(12) PATENT APPLICATION PUBLICATION
(19) INDIA
(22) Date of filing of Application :26/09/2013
(21) Application No.8387/DELNP/2013 A
(43) Publication Date : 19/12/2014

(54) Title of the invention : TOOTHED BELT

(51) International classification :F16G1/28,C08L23/26,C08L75/04
(31) Priority Document No :2011081235
(32) Priority Date :31/03/2011
(33) Name of priority country :Japan
(86) International Application No :PCT/JP2012/059280
Filing Date :29/03/2012
(87) International Publication No :WO 2012/133922
(61) Patent of Addition to Application Number :NA
Filing Date :NA
(62) Divisional to Application Number :NA
Filing Date :NA

(71)**Name of Applicant :**
1)NITTA CORPORATION
Address of Applicant :4 26 Sakuragawa 4 chome Naniwa ku Osaka shi Osaka 5560022 Japan
2)GATES UNITTA ASIA COMPANY
(72)**Name of Inventor :**
1)KASAZAKI Toshiaki
2)YOSHIDA Takahiko
3)SHIMIZU Shoji
4)UEGAKI Shinsuke
5)ONISHI Yoko
6)NAKAMURA Haruhiko
7)INOUE Ryuki

(57) Abstract :
The present invention provides a toothed belt in which the whole or a part of a belt body is formed from a thermoplastic elastomer alloy comprising a thermoplastic polyurethane (A) and an ethylene-propylene-diene copolymerized rubber (B) modified with an unsaturated carboxylic acid or a derivative thereof. A weight proportion [(B)/(A)] of the ethylene-propylene-diene copolymerized rubber (B) modified with an unsaturated carboxylic acid or a derivative thereof to the thermoplastic polyurethane (A) is preferably 0.1/99.9 to 30/70. The toothed belt according to the present invention hardly causes abrasion, damage, cracks, breakage and the like on the belt body and is remarkably excellent in durability, even if the belt is used at a high load for a long time.

No. of Pages : 48 No. of Claims : 5

(12) PATENT APPLICATION PUBLICATION
(19) INDIA
(22) Date of filing of Application :26/09/2013
(21) Application No.8388/DELNP/2013 A
(43) Publication Date : 19/12/2014

(54) Title of the invention : HEAT EXCHANGER HAVING ELECTRIC HEATING ELEMENTS

(51) International classification :H05B3/50
(31) Priority Document No :1100908
(32) Priority Date :28/03/2011
(33) Name of priority country :France
(86) International Application No :PCT/EP2012/053477
Filing Date :29/02/2012
(87) International Publication No :WO 2012/130553
(61) Patent of Addition to Application Number :NA
Filing Date :NA
(62) Divisional to Application Number :NA
Filing Date :NA

(71)**Name of Applicant :**
1)VALEO SYSTEMES THERMIQUES
Address of Applicant :8 rue Louis Lormand BP 513 La Verri¨re F 78321 Le Mesnil Saint Denis France
(72)**Name of Inventor :**
1)PIERRON Frdric
2)TELLIER Laurent

(57) Abstract :
The invention relates to an electrical heating device (1) including a heating body in which at least one electric heating element (8) is installed, the operation of said electric heating element being dependent on a control module (3) constituting the heating device, the heating body (2) including walls (5) at least partially defining a cavity (6) in which the control module (3) is accommodated, characterized in that the electrical heating element (8) and the control module (3) are suitable for being supplied with a so-called low voltage of between 80 and 600 volts, and in that an electrical insulator (17), which covers the walls (5) defining the cavity, is provided.

No. of Pages : 19 No. of Claims : 13

(12) PATENT APPLICATION PUBLICATION
(19) INDIA
(22) Date of filing of Application :27/09/2013
(21) Application No.8440/DELNP/2013 A
(43) Publication Date : 19/12/2014

(54) Title of the invention : POLE SHOE OF A GENERATOR PREFERABLY A GENERATOR OF A WIND TURBINE GENERATOR SYSTEM

(51) International classification :H02K3/52,H02K3/32,H02K1/08
(31) Priority Document No :10 2011 006 682.9
(32) Priority Date :01/04/2011
(33) Name of priority country :Germany
(86) International Application No :PCT/EP2012/055196
Filing Date :23/03/2012
(87) International Publication No:WO 2012/130752
(61) Patent of Addition to Application Number :NA
Filing Date :NA
(62) Divisional to Application Number :NA
Filing Date :NA

(71)**Name of Applicant :**
1)WOBBEN PROPERTIES GMBH
Address of Applicant :Dreekamp 5 26605 Aurich Germany
(72)**Name of Inventor :**
1)GUDEWER Wilko
2)HILDEBRAND Arno

(57) Abstract :
The present invention relates to a pole shoe, in particular of a generator, comprising a pole assembly (4), which is of a laminated configuration, at least one winding (6), which is arranged around the pole assembly (4), and a body (7), which passes through the laminated pole assembly (4) in the 10 longitudinal direction (A) thereof and has a number of transversely directed points of engagement, preferably at most three transversely directed points of engagement, in which a holding means (8) can respectively engage in order to fasten the pole shoe on a base (9), in particular the rotor or stator of a generator. The present invention also relates to a pole shoe, in 15 particular of a generator, comprising a pole assembly (4), which is of a laminated configuration, at least one winding (6), which is arranged around the pole assembly (4), and an insulating means (5), which is arranged between the pole assembly (4) and the winding (6), wherein the insulating means (5) comprises a fibre-composite material, and wherein the insulating 20 means (5) creates an adhesive bond between the pole assembly (4) and the winding (6). The present invention also relates to a pole shoe, in particular of a generator, with a pole assembly (4), which is of a laminated configuration, at least one winding (6), which is arranged around the pole assembly (4), and at least one end piece (1), which is provided at at least 25 one end of the pole assembly (4) in the longitudinal direction (A) thereof, between the pole assembly (4) and the winding (6), wherein the end piece (1) has rounded-off edges in order to create an edge-free transition between the end piece (1) and the pole assembly (4) for the winding.

No. of Pages : 28 No. of Claims : 13

(12) PATENT APPLICATION PUBLICATION
(19) INDIA
(22) Date of filing of Application :23/09/2013
(21) Application No.8290/DELNP/2013 A
(43) Publication Date : 19/12/2014

(54) Title of the invention : SPRING WASHER FOR A PLUNGER ASSEMBLY OF A HIGH PRESSURE PUMP AND HIGH PRESSURE PUMP

(51) International classification :F04B1/04,F02M59/06,F02M59/10
(31) Priority Document No :10 2011 017 573.3
(32) Priority Date :27/04/2011
(33) Name of priority country :Germany
(86) International Application No :PCT/EP2012/053972
Filing Date :08/03/2012
(87) International Publication No :WO 2012/146427
(61) Patent of Addition to Application Number :NA
Filing Date :NA
(62) Divisional to Application Number :NA
Filing Date :NA

(71)**Name of Applicant :**
1)ROBERT BOSCH GMBH
Address of Applicant :Postfach 30 02 20 70442 Stuttgart Germany
(72)**Name of Inventor :**
1)MAIER Eberhard
2)MEIER Gerhard
3)KUNZ Markus
4)SCHOLZ Frank

(57) Abstract :
The invention relates to a spring washer for a plunger assembly (2) of a high pressure pump in a fuel injection system, wherein the spring washer (1) particularly has a bending punched part and a central recess (3) for receiving a pump piston (4). According to the invention, the spring washer (1) furthermore has at least two crescent-shaped recesses (5) arranged around the central recess (3) that form one support ring (6) located radially inside and one support ring (7) radially outside, which support rings arc connected to one another by substantially radial webs (8), wherein the support ring (6) located radially inside has regions (9, 10), which are raised and lowered relative to a plane (E) and which are each arranged at an angle spacing to the substantially radial webs (8). The invention further relates to a high pressure pump for a fuel injection system having such a spring washer (1).

No. of Pages : 18 No. of Claims : 10

(12) PATENT APPLICATION PUBLICATION
(19) INDIA
(22) Date of filing of Application :23/09/2013
(21) Application No.8291/DELNP/2013 A
(43) Publication Date : 19/12/2014

(54) Title of the invention : DEVICE FOR CHECKING PHARMACEUTICAL PRODUCTS IN PARTICULAR HARD GELATIN CAPSULES

(51) International classification :B65B31/02,B65B9/067,A61J3/07
(31) Priority Document No :10 2011 007 277.2
(32) Priority Date :13/04/2011
(33) Name of priority country :Germany
(86) International Application No :PCT/EP2012/053556
Filing Date :01/03/2012
(87) International Publication No :WO 2012/139811
(61) Patent of Addition to Application Number :NA
Filing Date :NA
(62) Divisional to Application Number :NA
Filing Date :NA

(71)**Name of Applicant :**
1)ROBERT BOSCH GMBH
Address of Applicant :Postfach 30 02 20 70442 Stuttgart Germany
(72)**Name of Inventor :**
1)SCHLIPF Jens
2)RUNFT Werner
3)MAGA Iulian
4)VOGT Martin

(57) Abstract :
The invention relates to a device (10; 10a; 10b; 10c; 50) for checking pharmaceutical products (1), in particular hard gelatin capsules, by means of at least one radiation source (30; 60) preferably embodied as an X-ray source, and a conveying device which conveys the products (1) in a clocked manner in a radiation area (31) of the radiation source (30; 60). The radiation emitted by the radiation source (30; 60) penetrating the products (1) preferably perpendicular to the longitudinal axes thereof (2), and the radiation is captured on the side of the products (1) opposite the radiation source (30) by means of at least one sensor element (35) which is coupled to an evaluation device (36). The invention is characterized in that the conveyor device is embodied as a conveyor wheel (15; 15a; 51) which can rotate in a stepped manner about an axis (12; 52), and the products (1) are arranged, whilst being conveyed in the radiation area (31), in receiving areas (28; 37; 56) of the conveyor wheel (15; 5a; 51).

No. of Pages : 21 No. of Claims : 18

(12) PATENT APPLICATION PUBLICATION
(19) INDIA
(22) Date of filing of Application :27/09/2013
(21) Application No.8449/DELNP/2013 A
(43) Publication Date : 19/12/2014

(54) Title of the invention : REFORMING CATALYST AND PROCESS

(51) International classification :B01J23/42,B01J23/46,B01J37/08
(31) Priority Document No :13/184248
(32) Priority Date :15/07/2011
(33) Name of priority country :U.S.A.
(86) International Application No :PCT/US2012/041819
Filing Date :11/06/2012
(87) International Publication No :WO 2013/012489
(61) Patent of Addition to Application Number :NA
Filing Date :NA
(62) Divisional to Application Number :NA
Filing Date :NA

(71)**Name of Applicant :**
1)UOP LLC
Address of Applicant :25 East Algonquin Road P.O. Box 5017 Des Plaines Illinois 60017 5017 U.S.A.
(72)**Name of Inventor :**
1)LAPINSKI Mark P.
2)BARGER Paul

(57) Abstract :
One exemplary embodiment can be a catalyst for catalytic reforming of naphtha. The catalyst can have a noble metal including one or more of platinum palladium rhodium ruthenium osmium and iridium a lanthanide series metal including one or more elements of atomic numbers 57 71 of the periodic table and a support. Generally an average bulk density of the catalyst is 0.300 0.620 gram per cubic centimeter and an atomic ratio of the lanthanide series metal: noble metal is less than 1.3: 1. Moreover the lanthanide series metal can be distributed at a concentration of the lanthanide series metal in a 100 micron surface layer of the catalyst less than two times a concentration of the lanthanide series metal at a central core of the catalyst.

No. of Pages : 26 No. of Claims : 10

(12) PATENT APPLICATION PUBLICATION
(19) INDIA
(22) Date of filing of Application :27/09/2013
(21) Application No.8450/DELNP/2013 A
(43) Publication Date : 19/12/2014

(54) Title of the invention : LOAD STRAPPING DEVICE

(51) International classification :B60P7/08
(31) Priority Document No :BA 2011 00056
(32) Priority Date :21/03/2011
(33) Name of priority country :Denmark
(86) International Application No :PCT/DK2012/050083
Filing Date :20/03/2012
(87) International Publication No :WO 2012/126476
(61) Patent of Addition to Application Number :NA
Filing Date :NA
(62) Divisional to Application Number :NA
Filing Date :NA

(71)**Name of Applicant :**
1)QULATEC ApS
Address of Applicant :Br|ndekildevej 37 Bellinge DK 5250 Odense SV Denmark
(72)**Name of Inventor :**
1)HANSEN Lars V.

(57) Abstract :
A load strapping device for straps used for securing a load on a vehicle comprises mutually pivotable frame parts (1 2) which by their movement can rotate a two part spindle (3) in one direction (19) provided by pawls (10 11) and a ratchet wheel (9). The spindle (3) is composed by a base part (12) and a pivotable part (13) that may pivot between a closed position while abutting on a stop (18) and an open position where the pivotable part (13) extends at an angle relative to the closed position. Easy mounting of the strap on the spindle is possible as the small member (13) is pivoted to the open position avoiding threading the end of the strap in the spindle. Also more easy and time saving release of the strap is possible as the unwinding rotation of the spindle (3) provides that the small member (13) automatically moves to the open position by the action of the strap.

No. of Pages : 17 No. of Claims : 9

(12) PATENT APPLICATION PUBLICATION
(19) INDIA
(22) Date of filing of Application :27/09/2013
(21) Application No.8430/DELNP/2013 A
(43) Publication Date : 19/12/2014

(54) Title of the invention : BINDER POWDERS

(51) International classification :A61K9/20,A61K9/14,A61K38/17
(31) Priority Document No :61/447349
(32) Priority Date :28/02/2011
(33) Name of priority country :U.S.A.
(86) International Application No :PCT/AU2012/000200
Filing Date :28/02/2012
(87) International Publication No :WO 2012/116402
(61) Patent of Addition to Application Number :NA
Filing Date :NA
(62) Divisional to Application Number :NA
Filing Date :NA

(71)**Name of Applicant :**
1)MONASH UNIVERSITY
Address of Applicant :Wellington Road Clayton Victoria 3800 Australia
(72)**Name of Inventor :**
1)MORTON David
2)ORLANDO Laurence
3)ZHOU Tony Qi
4)HO Louise Chia Hua

(57) Abstract :
The present disclosure relates generally to binder powders for use in powder material processing and processes for their preparation. The disclosure further relates to binder powders for use in making solid powder compact forms solid powder compact forms containing said binder powders and methods for making solid powder compact forms.

No. of Pages : 40 No. of Claims : 16

(12) PATENT APPLICATION PUBLICATION
(19) INDIA
(22) Date of filing of Application :27/09/2013
(21) Application No.8431/DELNP/2013 A
(43) Publication Date : 19/12/2014

(54) Title of the invention : DRIVE DEVICE FOR ELECTRIC VEHICLE

(51) International classification :B60K7/00,B60B35/18,B60K17/14
(31) Priority Document No :2011049191
(32) Priority Date :07/03/2011
(33) Name of priority country :Japan
(86) International Application No :PCT/JP2011/055399
Filing Date :08/03/2011
(87) International Publication No :WO 2012/120651
(61) Patent of Addition to Application Number :NA
Filing Date :NA
(62) Divisional to Application Number :NA
Filing Date :NA

(71)**Name of Applicant :**
1)NTN CORPORATION
Address of Applicant :3 17 Kyomachibori 1 chome Nishi ku Osaka shi Osaka 5500003 Japan
(72)**Name of Inventor :**
1)SUZUKI Minoru
2)TAKEKAWA Yukiko
3)MAKINO Tomoaki

(57) Abstract :
An object of the present invention is to provide a drive device for an electric vehicle in which, by improving a supporting structure of an input shaft of a speed reduction unit, the bearing stiffness of a hub bearing is improved, while the rotational accuracy and the durability of an input shaft of a speed reduction unit are improved and noise is suppressed. In a drive device for an electric vehicle comprising: a speed reduction unit 12 including an input shaft 13 driven by an electric motor 11; a hub unit 15 rotationally driven by an output member 14 of the speed reduction unit 12; and a housing 16 accommodating the electric motor 11 and the speed reduction unit 12, wherein the input shaft 13 of the speed reduction unit 12 is supported by bearings 58 and 59 provided at two locations in the axial direction, the drive device is configured such that the bearings 58 and 59 provided at the two locations are both supported by the output member 14, and the PCD of the inboard-side hub bearing 89b of the hub bearings 89a, 89b disposed at the two locations in the axial direction of the hub unit 15 is set to be larger than the PCD of the outboard-side hub bearing 89a.

No. of Pages : 49 No. of Claims : 12

(12) PATENT APPLICATION PUBLICATION
(19) INDIA
(22) Date of filing of Application :27/09/2013
(21) Application No.8432/DELNP/2013 A
(43) Publication Date : 19/12/2014

(54) Title of the invention : ENERGY UNIT WITH SAFE AND STABLE HYDROGEN STORAGE

(51) International classification :H01M8/06
(31) Priority Document No :61/447571
(32) Priority Date :28/02/2011
(33) Name of priority country :U.S.A.
(86) International Application No :PCT/US2012/026950
Filing Date :28/02/2012
(87) International Publication No :WO 2012/118809
(61) Patent of Addition to Application Number :NA
Filing Date :NA
(62) Divisional to Application Number :NA
Filing Date :NA

(71)**Name of Applicant :**
1)KERNENE Nicolas
Address of Applicant :38 W. 315 Heritage Oaks Drive St. Charles IL 60175 U.S.A.
(72)**Name of Inventor :**
1)KERNENE Nicolas

(57) Abstract :
An energy unit in accordance with an embodiment of the present application stores at least water and hydrogen. The energy unit includes an electrolysis component operable to provide hydrogen from the water a hydrogen storage component operable to safely and stably store hydrogen in sold form and a fuel cell component operable to produce electricity from the hydrogen. The energy unit may be grouped with other like energy units to provide constant power for desired applications.

No. of Pages : 34 No. of Claims : 21

(12) PATENT APPLICATION PUBLICATION
(19) INDIA
(22) Date of filing of Application :27/09/2013
(21) Application No.8433/DELNP/2013 A
(43) Publication Date : 19/12/2014

(54) Title of the invention : REFRACTORY OBJECT GLASS OVERFLOW FORMING BLOCK AND PROCESS FOR GLASS OBJECT MANUFACTURE

(51) International classification :C04B35/101,C04B35/495,C03C3/097
(31) Priority Document No :61/451748
(32) Priority Date :11/03/2011
(33) Name of priority country :U.S.A.
(86) International Application No :PCT/US2012/028633
Filing Date :09/03/2012
(87) International Publication No :WO 2012/125507
(61) Patent of Addition to Application Number :NA
Filing Date :NA
(62) Divisional to Application Number :NA
Filing Date :NA

(71)**Name of Applicant :**
1)SAINT GOBAIN CERAMICS & PLASTICS INC.
Address of Applicant :One New Bond Street US Worcester Massachusetts 01615 0138 U.S.A.
(72)**Name of Inventor :**
1)CITTI Olivier
2)KAZMIERCZAK Andrea

(57) Abstract :
A refractory object can include at least 10 wt% AlO. In an embodiment the refractory object can further include a dopant including an oxide of a rare earth element Ta Nb Hf or any combination thereof. In another embodiment the refractory object may have a property such that the averaged grain size does not increase more than 500% during sintering an aspect ratio less than approximately 4.0 a creep rate less than approximately 1.0x10 μ/(μm x hr) or any combination thereof. In a particular embodiment the refractory object can be in the form of a refractory block or a glass overflow forming block. The glass overflow forming block can be useful in forming an Al Si Mg glass sheet. In a particular embodiment a layer including Mg Al oxide can initially form along exposed surfaces of the glass overflow forming block when forming the Al Si Mg glass sheet.

No. of Pages : 46 No. of Claims : 46

(12) PATENT APPLICATION PUBLICATION
(19) INDIA
(22) Date of filing of Application :27/09/2013
(21) Application No.8434/DELNP/2013 A
(43) Publication Date : 19/12/2014

(54) Title of the invention : SHOE

(51) International classification :A43B3/12,A43B3/24
(31) Priority Document No :A 265/2011
(32) Priority Date :28/02/2011
(33) Name of priority country :Austria
(86) International Application No :PCT/AT2012/000028
Filing Date :15/02/2012
(87) International Publication No :WO 2012/116382
(61) Patent of Addition to Application Number :NA
Filing Date :NA
(62) Divisional to Application Number :NA
Filing Date :NA

(71)**Name of Applicant :**
1)STEINDL Harald Marco
Address of Applicant :Zanderweg 7 A 5201 Seekirchen Austria
(72)**Name of Inventor :**
1)STEINDL Harald Marco

(57) Abstract :
The invention relates to a shoe, comprising a sole made of plastic, leather, cork, wood, or the like, which is provided with through-holes extending perpendicularly to the longitudinal axis of the sole for variably accommodating bands drawn through for fastening the sole to the foot, characterized in that the holes (4, 4a, 4b) of the sole (2) through which bands (3a, 3b, 3c) are not drawn during use are covered with decorative plugs or decorative screws (6) to prevent foreign bodies from entering.

No. of Pages : 6 No. of Claims : 1

(12) PATENT APPLICATION PUBLICATION
(19) INDIA
(22) Date of filing of Application :27/09/2013
(21) Application No.8441/DELNP/2013 A
(43) Publication Date : 19/12/2014

(54) Title of the invention : PERCUTANEOUS IMPLANT AND OSTOMY METHOD

(51) International classification :A61F5/445
(31) Priority Document No :1105126.5
(32) Priority Date :25/03/2011
(33) Name of priority country :U.K.
(86) International Application No :PCT/GB2012/050668
Filing Date :26/03/2012
(87) International Publication No :WO 2012/131351
(61) Patent of Addition to Application Number :NA
Filing Date :NA
(62) Divisional to Application Number :NA
Filing Date :NA

(71)**Name of Applicant :**
1)OSTOMYCURE AS
Address of Applicant :Gaustadallen 21 N 0349 Oslo Norway
2)JACKSON Robert
(72)**Name of Inventor :**
1)JOHANSSON Martin
2)AXELSSON Robert
3)AXELSSON Jan Erik

(57) Abstract :
A percutaneous ostomy implant for implantation into the abdominal wall of a patient comprises: a connecting member for mounting an external detachable device thereto; a first tubular ingrowth member depending from the connecting member; and a second tubular ingrowth member depending from the connecting member and being radially outwardly spaced from the first tubular ingrowth member. The first tubular ingrowth member is adapted to receive a bowel segment within it to form a stoma and serosal tissue of that bowel segment may infiltrate the first tubular ingrowth member. The second tubular member is adapted to abut dermal tissue such that the dermal tissue may infiltrate the second tubular ingrowth member thereby securing and sealing the ostomy implant to the dermis.

No. of Pages : 30 No. of Claims : 33

(12) PATENT APPLICATION PUBLICATION
(19) INDIA
(22) Date of filing of Application :27/09/2013
(21) Application No.8442/DELNP/2013 A
(43) Publication Date : 19/12/2014

(54) Title of the invention : METHODS OF MAKING ABSORBENT MEMBERS HAVING DENSITY PROFILE

(51) International classification :A61F13/15,D04H1/425,D04H1/26
(31) Priority Document No :13/094295
(32) Priority Date :26/04/2011
(33) Name of priority country :U.S.A.
(86) International Application No :PCT/US2012/034928
Filing Date :25/04/2012
(87) International Publication No :WO 2012/148974
(61) Patent of Addition to Application Number :NA
Filing Date :NA
(62) Divisional to Application Number :NA
Filing Date :NA

(71)**Name of Applicant :**
1)THE PROCTER & GAMBLE COMPANY
Address of Applicant :One Procter & Gamble Plaza Cincinnati Ohio 45202 U.S.A.
(72)**Name of Inventor :**
1)MARINELLI Luigi
2)LAKE Kirk Wallace
3)ORR Jill Marlene
4)PRIESSMAN Keith Robert
5)STRUBE John Brian
6)CIMINI Carmine
7)DI PILLA Mario

(57) Abstract :
Absorbent members and methods of making the same are disclosed. In one embodiment the absorbent member is a unitary absorbent fibrous web having a density profile through its thickness. In one embodiment the density profile is relatively centered through the thickness of the web and the maximum density of the web is located between about 35% and about 65% of the distance through the thickness of the web. In one embodiment the method involves subjecting a precursor web to at least one cycle (or pass) through a mechanical deformation process. Typically the method involves subjecting the precursor web to multiples cycles (or passes) through a mechanical deformation process.

No. of Pages : 81 No. of Claims : 12

(12) PATENT APPLICATION PUBLICATION
(19) INDIA
(22) Date of filing of Application :27/09/2013
(21) Application No.8443/DELNP/2013 A
(43) Publication Date : 19/12/2014

(54) Title of the invention : PROCESS AND PLANT FOR PRODUCING CEMENT CLINKER AND FOR PURIFYING THE OFFGASES FORMED

(51) International classification :F27B7/20,F27D17/00,B01D53/50
(31) Priority Document No :10 2011 001 933.2
(32) Priority Date :08/04/2011
(33) Name of priority country :Germany
(86) International Application No :PCT/EP2012/055976
Filing Date :02/04/2012
(87) International Publication No :WO 2012/136631
(61) Patent of Addition to Application Number :NA
Filing Date :NA
(62) Divisional to Application Number :NA
Filing Date :NA

(71)**Name of Applicant :**
1)ELEX CEMCAT AG
Address of Applicant :Eschenstrasse 6 CH 8603 Schwerzenbach Switzerland
(72)**Name of Inventor :**
1)ZURHOVE Franz Josef

(57) Abstract :
The invention relates to a process and a plant for producing cement clinker and for purifying the off-gases formed thereby, wherein cement raw meal is preheated in a preheater by means of hot off-gases and then 10 optionally precalcined, the preheated and optionally precalcined cement raw meal is burnt in a rotary kiln to form cement clinker, 15 - the cement clinker is cooled in a cooler, the hot off-gases used in the preheater are used in a raw mill for treating the cement raw meal, 20 - the dust content of a dust-containing mill off-gas thereby formed is reduced in a separating device to less than 5 g/Nm3, preferably less than 1 g/Nm3, alkali hydrogen carbonate and/or alkali carbonate is added to and mixed with the mill off-gas whose dust content has been reduced to less than 5 g/Nm3, and 25 the mixed gas thereby formed is subsequently fed to a process filter for separation of dust laden with pollutants.

No. of Pages : 17 No. of Claims : 12

(12) PATENT APPLICATION PUBLICATION
(19) INDIA
(22) Date of filing of Application :27/09/2013
(21) Application No.8445/DELNP/2013 A
(43) Publication Date : 19/12/2014

(54) Title of the invention : COMPOUNDS FOR TREATMENT OF METABOLIC SYNDROME

(51) International classification :C07D471/04,A61K8/49,A23L1/29
(31) Priority Document No :61/468163
(32) Priority Date :28/03/2011
(33) Name of priority country :U.S.A.
(86) International Application No :PCT/EP2012/055570
Filing Date :28/03/2012
(87) International Publication No :WO 2012/130912
(61) Patent of Addition to Application Number :NA
Filing Date :NA
(62) Divisional to Application Number :NA
Filing Date :NA

(71)**Name of Applicant :**
1)SJT MOLECULAR RESEARCH S.L.
Address of Applicant :Dato 38 B E 01005 Vitoria Spain
(72)**Name of Inventor :**
1)AGREDA NAVAJAS Juan Carlos
2)MIKIO KASSUYA Roberto

(57) Abstract :
Present invention refers to new compounds of formula I or II its synthesis and its use in the treatment of metabolic syndrome particularly for the treatment of type I or type II diabetes and/or metabolic syndrome or metabolic disease or metabolic disorders.

No. of Pages : 126 No. of Claims : 31

(12) PATENT APPLICATION PUBLICATION
(19) INDIA
(22) Date of filing of Application :27/09/2013
(21) Application No.8446/DELNP/2013 A
(43) Publication Date : 19/12/2014

(54) Title of the invention : IMPELLER DEVICE FOR COLLECTING LEAVES OF PAPER AND METHOD FOR PRODUCING IMPELLER

(51) International classification :B65H29/40
(31) Priority Document No :PCT/JP2011/058043
(32) Priority Date :30/03/2011
(33) Name of priority country :Japan
(86) International Application No :PCT/JP2011/065794
Filing Date :11/07/2011
(87) International Publication No :WO 2012/132035
(61) Patent of Addition to Application Number :NA
Filing Date :NA
(62) Divisional to Application Number :NA
Filing Date :NA

(71)**Name of Applicant :**
1)GLORY LTD.
Address of Applicant :3 1 Shimoteno 1 chome Himeji shi Hyogo 6708567 Japan
(72)**Name of Inventor :**
1)SATAKE Hirotsugu
2)TAKAYAMA Atsushi
3)NAKASHIMA Shinji

(57) Abstract :
The invention provides an impeller (52) wherein a protrusion (57) is provided on the inner surface and/or outer surface of blades (56). The protrusion (57) on a first blade (56) of a pair of blades (56) which are adjacent in the circumferential direction of a base part (54), and a second blade (56) of said pair are overlapping, when seen from the axial direction of the base part (54), and the protrusion (57) of the first blade (56) and the second blade (56) are not in contact.

No. of Pages : 62 No. of Claims : 14

(12) PATENT APPLICATION PUBLICATION
(19) INDIA
(22) Date of filing of Application :27/09/2013
(21) Application No.8452/DELNP/2013 A
(43) Publication Date : 19/12/2014

(54) Title of the invention : DIGITAL TOKEN GENERATOR SERVER FOR RECORDING DIGITAL TOKENS AND METHOD FOR ISSUING DIGITAL TOKEN

(51) International classification :G07F7/10
(31) Priority Document No :NA
(32) Priority Date :NA
(33) Name of priority country :NA
(86) International Application No :PCT/CN2011/072922
Filing Date :18/04/2011
(87) International Publication No :WO 2012/142740
(61) Patent of Addition to Application Number :NA
Filing Date :NA
(62) Divisional to Application Number :NA
Filing Date :NA

(71)**Name of Applicant :**
1)EGONEXUS LIMITED
Address of Applicant :Room 2301 World Wide House 19 Des Voeux Road Central Hong Kong China
(72)**Name of Inventor :**
1)MAEVSKY Dmitry

(57) Abstract :
A disconnected digital token generator is provided which is capable of generating and displaying a digital token for a customer. The customer can take a picture of the digital token using a smart phone and then communicates with a server through a hyperlink represented by the picture using the smart phone. The disconnected digital token generator thus can be used for issuing digital tokens without requiring any networks or logical connections.

No. of Pages : 31 No. of Claims : 22

(12) PATENT APPLICATION PUBLICATION
(19) INDIA
(22) Date of filing of Application :27/09/2013
(21) Application No.8453/DELNP/2013 A
(43) Publication Date : 19/12/2014

(54) Title of the invention : ETHYLENE POLYMER PROCESS FOR PRODUCING ETHYLENE POLYMER PROCESS FOR PRODUCING POLYMERIZATION CATALYST AND HOLLOW PLASTIC MOLDING COMPRISING ETHYLENE POLYMER AND USE THEREOF

(51) International classification :C08F10/02,C08F4/02,C08F4/69
(31) Priority Document No :2011074900
(32) Priority Date :30/03/2011
(33) Name of priority country :Japan
(86) International Application No:PCT/JP2012/058487
Filing Date :29/03/2012
(87) International Publication No :WO 2012/133713
(61) Patent of Addition to Application Number :NA
Filing Date :NA
(62) Divisional to Application Number :NA
Filing Date :NA

(71)**Name of Applicant :**
1)Japan Polyethylene Corporation
Address of Applicant :1 1 Marunouchi 1 chome Chiyoda ku Tokyo 1008251 Japan
(72)**Name of Inventor :**
1)MONOI Takashi
2)KUZUBA Yuuichi
3)KANAZAWA Satoshi
4)OGAWA Kouichi

(57) Abstract :
An object of the invention is to provide An ethylene-based polymer excellent in moldability and <iurability, and also excellent in the balance of stiffness and durability, and to provide a molded product of hollow plastic using the ethylene-based polymer. The ethylene-based polymer according to the invention is an ethylene-based polymer having specific characteristics and manufactured by a homopblymerizatibn of ethylene or a copoIymerizatiQn of ethylene and ct-olefin using a chromium catalyst

No. of Pages : 92 No. of Claims : 15

(12) PATENT APPLICATION PUBLICATION
(19) INDIA
(22) Date of filing of Application :27/09/2013
(21) Application No.8454/DELNP/2013 A
(43) Publication Date : 19/12/2014

(54) Title of the invention : WET STATE PRESERVATION OF MINERAL SLURRIES

(51) International classification :A01N41/02,A01N41/04,A01N43/40
(31) Priority Document No :61/468127
(32) Priority Date :28/03/2011
(33) Name of priority country :U.S.A.
(86) International Application No :PCT/EP2012/055368
Filing Date :27/03/2012
(87) International Publication No :WO 2012/130822
(61) Patent of Addition to Application Number :NA
Filing Date :NA
(62) Divisional to Application Number :NA
Filing Date :NA

(71)**Name of Applicant :**
1)ARCH CHEMICALS INC.
Address of Applicant :5660 New Northside Drive Suite 1100 Atlanta Georgia 30328 U.S.A.
(72)**Name of Inventor :**
1)CLARKE Fitzgerald
2)HYDE Helen Margaret
3)PETERS Helmut
4)WILLIAMS Terri

(57) Abstract :
The invention relates to an antimicrobial composition comprising an isothiazolin 3 one such as l 2 benzisothiazolin 3 one a zinc compound selected from zinc salts zinc oxide zinc hydroxide or combinations thereof a pyrithione salt or pyrithione acid and a surfactant selected from the group consisting of (i) an anionic surfactant having a sulfate or sulfonate moiety attached to a straight or branched chain containing from 10 to 18 carbon atoms at the backbone of the chain (ii) an anionic surfactant being an alkylarenesulfonic acid or salt thereof wherein the alkyl portion contains from 10 to 18 carbon atoms and the aryl portion contains a benzene or substituted benzene moiety and combinations thereof. This composition is particularly effective in preventing the growth of various microorganisms in mineral slurries such as aqueous calcium carbonate slurries.

No. of Pages : 19 No. of Claims : 20

(12) PATENT APPLICATION PUBLICATION
(19) INDIA
(22) Date of filing of Application :27/09/2013
(21) Application No.8455/DELNP/2013 A
(43) Publication Date : 19/12/2014

(54) Title of the invention : TRANSGENIC PLANTS EXPRESSING DISPERSINB

(51) International classification :C12N15/82,A01H5/00,C12N5/10
(31) Priority Document No :61/466625
(32) Priority Date :23/03/2011
(33) Name of priority country :U.S.A.
(86) International Application No :PCT/US2012/030390
Filing Date :23/03/2012
(87) International Publication No :WO 2012/129515
(61) Patent of Addition to Application Number :NA
Filing Date :NA
(62) Divisional to Application Number :NA
Filing Date :NA

(71)**Name of Applicant :**
1)UNIVERSITY OF MEDICINE AND DENTISTRY OF NEW JERSEY
Address of Applicant :355 George Street Suite 3200 New Brunswick New Jersey 08901 U.S.A.
(72)**Name of Inventor :**
1)RAGUNATH Chandran
2)SHANMUGAM Mayilvahanan
3)KAPLAN Jeffrey B.
4)RAMASUBBU Narayanan

(57) Abstract :
dspBAggregatibacter actinomycetemcomitansMethods and compositions for producing genetically transformed plants exhibiting antibiofilm activity against bacterial pathogens are disclosed. Bacterial cells and plant transformation vectors include genes encoding DispersinB antibiofilm enzymes of .

No. of Pages : 59 No. of Claims : 31

(12) PATENT APPLICATION PUBLICATION
(19) INDIA
(22) Date of filing of Application :27/09/2013
(21) Application No.8457/DELNP/2013 A
(43) Publication Date : 19/12/2014

(54) Title of the invention : POLYOLEFIN COMPOSITION WITH LOW CLTE AND REDUCED OCCURRENCE OF FLOW MARKS

(51) International classification :C08L23/12,C08F2/00
(31) Priority Document No :11156746.7
(32) Priority Date :03/03/2011
(33) Name of priority country :EPO
(86) International Application No :PCT/EP2012/053602
Filing Date :02/03/2012
(87) International Publication No :WO 2012/117086
(61) Patent of Addition to Application Number :NA
Filing Date :NA
(62) Divisional to Application Number :NA
Filing Date :NA

(71)**Name of Applicant :**
1)BOREALIS AG
Address of Applicant :Wagramer Strasse 17 19 A 1220 Vienna Austria
(72)**Name of Inventor :**
1)KOCK Cornelia
2)TRANNINGER Michael

(57) Abstract :
The invention relates to a novel polyolefin composition having a low coefficient of thermal expansion (CLTE) and having a reduced occurrence of flow marks. The novel polyolefin compositions comprise a heterophasic polypropylene composition ethylene/1 butene elastomer and an inorganic filler.

No. of Pages : 34 No. of Claims : 11

(12) PATENT APPLICATION PUBLICATION
(19) INDIA
(22) Date of filing of Application :27/09/2013
(21) Application No.8459/DELNP/2013 A
(43) Publication Date : 19/12/2014

(54) Title of the invention : AUTONOMOUS MAXIMUM POWER SETTING BASED ON CHANNEL FINGERPRINT

(51) International classification :H04W52/24
(31) Priority Document No :61/472035
(32) Priority Date :05/04/2011
(33) Name of priority country :U.S.A.
(86) International Application No :PCT/SE2011/051596
Filing Date :28/12/2011
(87) International Publication No :WO 2012/138274
(61) Patent of Addition to Application Number :NA
Filing Date :NA
(62) Divisional to Application Number :NA
Filing Date :NA

(71)**Name of Applicant :**
1)TELEFONAKTIEBOLAGET L M ERICSSON (PUBL)
Address of Applicant :S 164 83 Stockholm Sweden
(72)**Name of Inventor :**
1)SIOMINA Iana
2)KAZMI Muhammad
3)BOUDREAU Gary

(57) Abstract :
A home base station (HBS) (104 801) performs radio channel measurements to detect one or more user equipments (UEs)(107) not served by the HBS which may be in a potentially interfering environment caused at least in part by the HBS. A database (812) of historical channel data (channel fingerprinting) of the HBS coverage area is used to predict the channel conditions and expected interference signal power seen by the detected UE(s). Based on a combination of the radio measurements(813) and historical channel data the HBS can accurately and adaptively reduce its transmit power to a level that reduces or eliminates interference with the detected UE(s) while also not significantly degrading communication quality between other UEs served by the HBS.

No. of Pages : 32 No. of Claims : 31

(12) PATENT APPLICATION PUBLICATION
(19) INDIA
(22) Date of filing of Application :27/09/2013
(21) Application No.8424/DELNP/2013 A
(43) Publication Date : 19/12/2014

(54) Title of the invention : DEVICE AND METHOD FOR RETROVERSION CORRECTION FOR SHOULDER ARTHROPLASTY

(51) International classification :A61B17/56
(31) Priority Document No :13/051041
(32) Priority Date :18/03/2011
(33) Name of priority country :U.S.A.
(86) International Application No :PCT/US2012/029021
Filing Date :14/03/2012
(87) International Publication No :WO 2012/129019
(61) Patent of Addition to Application Number :NA
Filing Date :NA
(62) Divisional to Application Number :NA
Filing Date :NA

(71)**Name of Applicant :**
1)DEPUY SYNTHES PRODUCTS LLC
Address of Applicant :325 Paramount Drive Raynham MA 02767 0350 U.S.A.
(72)**Name of Inventor :**
1)DE WILDE Lieven
2)LAPPIN Kyle

(57) Abstract :
A kit for implanting a glenoid component in one embodiment includes a retroversion glenoid component including a generally flat glenoid bone contacting surface defining a first plane a first offset peg extending away from the glenoid bone contacting surface a concave articulating surface an upper surface extending about the concave articulating surface and generally opposite to the glenoid bone contacting surface the upper surface defining a second plane the second plane angled with respect to the first plane and a drill guide configured to guide a drill in forming a bore in a scapula to receive the first offset peg.

No. of Pages : 38 No. of Claims : 17

(12) PATENT APPLICATION PUBLICATION
(19) INDIA
(22) Date of filing of Application :27/09/2013
(21) Application No.8425/DELNP/2013 A
(43) Publication Date : 19/12/2014

(54) Title of the invention : ABSORBENT CICATRIZATION DRESSING AND USES THEREOF FOR CHRONIC WOUNDS

(51) International classification :A61F13/00
(31) Priority Document No :1152720
(32) Priority Date :31/03/2011
(33) Name of priority country :France
(86) International Application No :PCT/FR2012/050665
Filing Date :29/03/2012
(87) International Publication No :WO 2012/131263
(61) Patent of Addition to Application Number :NA
Filing Date :NA
(62) Divisional to Application Number :NA
Filing Date :NA

(71)**Name of Applicant :**
1)LABORATOIRES URGO
Address of Applicant :42 rue de Longvic F 21300 Chenove France
2)SOCIETE DE DEVELOPPEMENT ET DE RECHERCHE INDUSTRIELLE
(72)**Name of Inventor :**
1)PERNOT Jean Marc
2)AUGUSTE Stphane
3)LAURENSOU Christelle

(57) Abstract :
One subject of the present invention is a dressing essentially consisting of: - an absorbent nonwoven compress formed from a mixture: - of bicomponent thermal bonding nonabsorbent fibers, of core-shell type, said core being made of polyester (polyethylene terephthalate, PET) and the shell being made of polyethylene; - of . bicomponent superabsorbent fibers of core-shell type with a core made of polyacrylonitrile and a shell made of polyacrylate; and - a net fabric made from a hydrocolloid elastomer mass partially covering the face of the compress intended to come into contact with the wound. This product is especially intended to promote the healing of chronic wounds by optimizing the debridement.

No. of Pages : 36 No. of Claims : 15

(12) PATENT APPLICATION PUBLICATION
(19) INDIA
(22) Date of filing of Application :27/09/2013
(21) Application No.8426/DELNP/2013 A
(43) Publication Date : 19/12/2014

(54) Title of the invention : GLASS FURNACE IN PARTICULAR FOR CLEAR OR ULTRA CLEAR GLASS WITH LATERAL SECONDARY RECIRCULATIONS

(51) International classification :C03B5/183
(31) Priority Document No :1152959
(32) Priority Date :06/04/2011
(33) Name of priority country :France
(86) International Application No :PCT/IB2012/051686
Filing Date :05/04/2012
(87) International Publication No :WO 2012/137161
(61) Patent of Addition to Application Number :NA
Filing Date :NA
(62) Divisional to Application Number :NA
Filing Date :NA

(71)**Name of Applicant :**
1)FIVES STEIN
Address of Applicant :108 112 avenue de la Libert F 94700 Maisons Alfort France
(72)**Name of Inventor :**
1)KUHN Wolf Stefan
2)TABLOUL Samir

(57) Abstract :
Glass furnace for heating and melting materials to be vitrified, in which furnace two molten glass recirculation loops are formed in the bath between a hotter central zone of the furnace and, respectively, the inlet (E) and the outlet (Y) which are at a lower temperature; the furnace comprises lateral cooling means (12a), (12b) so as to create or strengthen lateral secondary recirculation rolls (B2La), (B2Lb) of the glass.

No. of Pages : 18 No. of Claims : 7

(12) PATENT APPLICATION PUBLICATION
(19) INDIA
(22) Date of filing of Application :27/09/2013
(21) Application No.8427/DELNP/2013 A
(43) Publication Date : 19/12/2014

(54) Title of the invention : DRIVE DEVICE FOR ELECTRIC VEHICLE

(51) International classification :H02K5/00,H02K5/04
(31) Priority Document No :2011049190
(32) Priority Date :07/03/2011
(33) Name of priority country :Japan
(86) International Application No :PCT/JP2011/055398
Filing Date :08/03/2011
(87) International Publication No :WO 2012/120650
(61) Patent of Addition to Application Number :NA
Filing Date :NA
(62) Divisional to Application Number :NA
Filing Date :NA

(71)**Name of Applicant :**
1)NTN CORPORATION
Address of Applicant :3 17 Kyomachibori 1 chome Nishi ku Osaka shi Osaka 5500003 Japan
(72)**Name of Inventor :**
1)SUZUKI Minoru
2)TAKEKAWA Yukiko
3)MAKINO Tomoaki

(57) Abstract :
An object of the present invention is to provide a structure that does not require a knuckle on the vehicle body side while improving the rotational accuracy of an input shaft of a speed reduction unit, increasing the durability of bearings, and suppressing the rotation noise of the bearings by improving the supporting structure of the input shaft of the speed reduction unit. In a drive device for an electric vehicle comprising: a speed reduction unit 12 including an input shaft 13 driven by an electric motor 11; a hub unit 15 rotationally driven by an output member 14 of the speed reduction unit 12; and a housing 16 accommodating the electric motor 11 and the speed reduction unit 12, wherein the input shaft 13 of the speed reduction unit 12 is supported by bearings 58, 59 provided at two locations in the axial direction, the drive device is configured such that the bearings 58, 59 provided at the two locations are both supported by the output member 14, and the housing 16 is provided with a suspension joining portion 27.

No. of Pages : 48 No. of Claims : 12

(12) PATENT APPLICATION PUBLICATION
(19) INDIA
(22) Date of filing of Application :27/09/2013
(21) Application No.8428/DELNP/2013 A
(43) Publication Date : 19/12/2014

(54) Title of the invention : METHODS OF FORMING POLYCRYSTALLINE ELEMENTS AND STRUCTURES FORMED BY SUCH METHODS

(51) International classification	:E21B10/46,E21B10/573,C22C26/00
(31) Priority Document No	:13/040947
(32) Priority Date	:04/03/2011
(33) Name of priority country	:U.S.A.
(86) International Application No	:PCT/US2012/027068
Filing Date	:29/02/2012
(87) International Publication No	:WO 2012/121940
(61) Patent of Addition to Application Number	:NA
Filing Date	:NA
(62) Divisional to Application Number	:NA
Filing Date	:NA

(71)**Name of Applicant :**
1)BAKER HUGHES INCORPORATED
Address of Applicant :P.O. Box 4740 Houston TX 77210 4740 U.S.A.
(72)**Name of Inventor :**
1)DIGIOVANNI Anthony A.
2)LYONS Nicholas J.
3)NELMS Derek L.
4)SCOTT Danny E.

(57) Abstract :
Methods of forming a polycrystalline element comprise forming a polycrystalline table on a first substrate. Catalyst material may be removed from at least a portion of the polycrystalline table. The polycrystalline table and a portion of a first substrate attached to the polycrystalline table may be removed from a remainder of the first substrate. The portion of the first substrate may be attached to another substrate. Polycrystalline elements comprise a polycrystalline table attached to a portion of a first substrate on which the polycrystalline table was formed another substrate attached to the portion of the first substrate.

No. of Pages : 34 No. of Claims : 20

(12) PATENT APPLICATION PUBLICATION
(19) INDIA
(22) Date of filing of Application :26/09/2013
(21) Application No.8400/DELNP/2013 A
(43) Publication Date : 19/12/2014

(54) Title of the invention : COMBINATION OF A PHOSPHATIDYLINOSITOL 3 KINASE (PI3K) INHIBITOR AND A MTOR INHIBITOR

(51) International classification :A61K31/436,A61K31/4439,A61P35/00
(31) Priority Document No :61/478572
(32) Priority Date :25/04/2011
(33) Name of priority country :U.S.A.
(86) International Application No :PCT/US2012/034647
Filing Date :23/04/2012
(87) International Publication No :WO 2012/148846
(61) Patent of Addition to Application Number :NA
Filing Date :NA
(62) Divisional to Application Number :NA
Filing Date :NA

(71)**Name of Applicant :**
1)NOVARTIS AG
Address of Applicant :Lichstrasse 35 CH 4056 Basel Switzerland
(72)**Name of Inventor :**
1)FRITSCH Christine
2)GARCIA ECHEVERRIA Carlos
3)HUANG Xizhong
4)MAIRA Sauveur Michel

(57) Abstract :
The present invention relates to a pharmaceutical combination comprising a phosphatidylinositol 3 kinase (PI3K) inhibitor compound which is a 2 carboxamide cycloamino urea derivative or a pharmaceutically acceptable salt thereof and at least one mammalian target of rapamycin (mTOR) inhibitor or a pharmaceutically acceptable salt thereof; a pharmaceutical composition comprising such a combination; and the uses of such a combination in the treatment proliferative diseases more specifically of mammalian target of rapamycin (mTOR) kinase dependent diseases.

No. of Pages : 59 No. of Claims : 13

(12) PATENT APPLICATION PUBLICATION
(19) INDIA
(22) Date of filing of Application :26/09/2013
(21) Application No.8401/DELNP/2013 A
(43) Publication Date : 19/12/2014

(54) Title of the invention : SHUT OFF DEVICE WITH AUTOMATICALLY ACTIVATABLE LOCKING

(51) International classification :F01D21/00
(31) Priority Document No :1152310
(32) Priority Date :21/03/2011
(33) Name of priority country :France
(86) International Application No :PCT/FR2012/050463
Filing Date :06/03/2012
(87) International Publication No :WO 2012/127146
(61) Patent of Addition to Application Number :NA
Filing Date :NA
(62) Divisional to Application Number :NA
Filing Date :NA

(71)**Name of Applicant :**
1)JPB SYSTEME
Address of Applicant :Alle des Pleus ZAC de Tuboeuf F 77170 Brie Comte Robert France
(72)**Name of Inventor :**
1)MARC Damien Jacky

(57) Abstract :
The invention relates to a shut-off device comprising a plug (1) intended to be placed over a threaded orifice (2) of a casing (3), or to be removed therefrom, by screwing and unscrewing respectively, the plug comprising a central body (4) bearing a screw thread (5), and locking and unlocking . means that oppose the spontaneous unscrewing of the plug and that are 10 activated automatically by the turning of the plug (1) and its corresponding progression in the direction of screwing along a longitudinal axis (X). The locking and unlocking means comprise two releaseable coupling members (7, 8), of which a first member (7) is coupled to and turns with the central body (4) via a protective skirt (10) and of which a second member (8) can be 15 prevented from turning with respect to the casing (3) during screwing.

No. of Pages : 20 No. of Claims : 15

(12) PATENT APPLICATION PUBLICATION
(19) INDIA
(22) Date of filing of Application :26/09/2013
(21) Application No.8402/DELNP/2013 A
(43) Publication Date : 19/12/2014

(54) Title of the invention : ADHESIVE COMPOSITION ADHESION METHOD USING SAME LAYERED BODY AND TIRE

(51) International classification :C09J107/00,B32B25/04,B32B27/00
(31) Priority Document No :2011090545
(32) Priority Date :15/04/2011
(33) Name of priority country :Japan
(86) International Application No :PCT/JP2012/002558
Filing Date :12/04/2012
(87) International Publication No :WO 2012/140902
(61) Patent of Addition to Application Number :NA
Filing Date :NA
(62) Divisional to Application Number :NA
Filing Date :NA

(71)**Name of Applicant :**
1)BRIDGESTONE CORPORATION
Address of Applicant :10 1 Kyobashi 1 chome Chuo ku Tokyo 1048340 Japan
(72)**Name of Inventor :**
1)OGASAWARA Takuya
2)NAKAGAWA Ryuji
3)HAYAKAWA Kotaro
4)CHIASHI Hideyuki

(57) Abstract :
The present invention provides an adhesive composition that may improve both adhesiveness to a film layer and adhesiveness to a rubber layer, and an adhesion method using the same, as well as a laminate and a tire. The adhesive composition according to the present invention includes a rubber 10 component, at least 80 mass% of which rubber component is an epoxidized natural rubber.

No. of Pages : 26 No. of Claims : 14

(12) PATENT APPLICATION PUBLICATION
(19) INDIA
(22) Date of filing of Application :27/09/2013
(21) Application No.8465/DELNP/2013 A
(43) Publication Date : 19/12/2014

(54) Title of the invention : METHOD FOR ATTACHING A USER TERMINAL TO A BASE STATION OF A NETWORK

(51) International classification :H04W48/20,H04W60/00
(31) Priority Document No :11164377.1
(32) Priority Date :29/04/2011
(33) Name of priority country :EPO
(86) International Application No :PCT/EP2012/056315
Filing Date :05/04/2012
(87) International Publication No :WO 2012/146476
(61) Patent of Addition to Application Number :NA
Filing Date :NA
(62) Divisional to Application Number :NA
Filing Date :NA

(71)**Name of Applicant :**
1)ALCATEL LUCENT
Address of Applicant :3 Avenue Octave Grard F 75007 Paris France
(72)**Name of Inventor :**
1)FEKI Afef
2)CHEN Chung Shue
3)BACCELLI Fran§ois
4)THOMAS Laurent

(57) Abstract :
The present invention relates to a method for attaching a user terminal to a base station of a network said network comprising a plurality of base stations said method comprising : defining a global cost function which is a weighted sum of the user terminal transmission delays over all the user terminals in the network using a user terminal s context weighting factor representing a user terminal s characteristic; defining a local cost function for each user terminal from said global cost function said local cost function taking into account said user terminal s context weighting factor for each user terminal and being a function of the base station to which this user terminal is associated; running a Gibbs sampler with said local cost function for producing user base station association probabilities; choosing the user base station association probability which favors low local cost; and attaching said user terminal to a base station according to the user base station association probability chosen.

No. of Pages : 41 No. of Claims : 17

(12) PATENT APPLICATION PUBLICATION
(19) INDIA
(22) Date of filing of Application :30/09/2013
(21) Application No.8469/DELNP/2013 A
(43) Publication Date : 19/12/2014

(54) Title of the invention : CASTING MOLD SET

(51) International classification :B22C9/06,B22C9/10,B22C9/24
(31) Priority Document No :2011088859
(32) Priority Date :13/04/2011
(33) Name of priority country :Japan
(86) International Application No :PCT/IB2012/000848
Filing Date :13/04/2012
(87) International Publication No :WO 2012/140511
(61) Patent of Addition to Application Number :NA
Filing Date :NA
(62) Divisional to Application Number :NA
Filing Date :NA

(71)**Name of Applicant :**
1)TOYOTA JIDOSHA KABUSHIKI KAISHA
Address of Applicant :1 Toyota cho Toyota shi Aichi ken 471 8571 Japan
(72)**Name of Inventor :**
1)AOKI Norimitsu

(57) Abstract :
The mold set is constructed with a cope a drag cheeks and a core. In a case where the mold set is closed before molten metal is fed a first clearance between a first mold (cope) that is located above a casting shape forming part of the core and the casting shape forming part is smaller than a second clearance between an upper surface of a core print of the core and a second mold (cheek) that is opposed to the upper surface.

No. of Pages : 20 No. of Claims : 6

(12) PATENT APPLICATION PUBLICATION
(19) INDIA
(22) Date of filing of Application :26/09/2013
(21) Application No.8391/DELNP/2013 A
(43) Publication Date : 19/12/2014

(54) Title of the invention : THERMOPLASTIC RESIN COMPOSITION HAVING HIGH DURABILITY

(51) International classification :C08L101/00,C08L23/26,C08L75/04
(31) Priority Document No :2011081232
(32) Priority Date :31/03/2011
(33) Name of priority country :Japan
(86) International Application No :PCT/JP2012/059285
Filing Date :29/03/2012
(87) International Publication No :WO 2012/133927
(61) Patent of Addition to Application Number :NA
Filing Date :NA
(62) Divisional to Application Number :NA
Filing Date :NA

(71)**Name of Applicant :**
1)NITTA CORPORATION
Address of Applicant :4 26 Sakuragawa 4 chome Naniwa ku Osaka shi Osaka 5560022 Japan
(72)**Name of Inventor :**
1)KASAZAKI Toshiaki
2)YOSHIDA Takahiko
3)SHIMIZU Shoji
4)UEGAKI Shinsuke
5)ONISHI Yoko

(57) Abstract :
The thermoplastic resin composition according to the present invention includes a thermoplastic resin (A), and a modified ethylene copolymer (B) dispersed and contained therein, wherein the modified ethylene copolymer (B) in the thermoplastic resin composition has an average dispersed particle aspect ratio of 1 to 3.5, and an average dispersed particle diameter of not more than 3)um. The modified ethylene copolymer (B) is preferably a copolymer, modified with an unsaturated carboxylic acid or a derivative thereof, of ethylene with at least one monomer component selected from the group consisting of (i) olefin components except for ethylene, (ii) diene components and (iii) ester components having an ethylenically unsaturated group. The thermoplastic resin composition according to the present invention is not only excellent in the abrasion resistance but also remarkably excellent in the durability, particularly in the bending fatigue resistance, and hardly causes abrasion, damage, cracks, breaks and the like even if being used for a long time in the state of being impressed with a large load or even if the time of being subjected to a load is short.

No. of Pages : 112 No. of Claims : 13

(12) PATENT APPLICATION PUBLICATION
(19) INDIA
(22) Date of filing of Application :26/09/2013
(21) Application No.8392/DELNP/2013 A
(43) Publication Date : 19/12/2014

(54) Title of the invention : BELT

(51) International classification :C08L101/00,B29D29/00,C08L23/26
(31) Priority Document No :2011081232
(32) Priority Date :31/03/2011
(33) Name of priority country :Japan
(86) International Application No :PCT/JP2012/059281
Filing Date :29/03/2012
(87) International Publication No :WO 2012/133923
(61) Patent of Addition to Application Number :NA
Filing Date :NA
(62) Divisional to Application Number :NA
Filing Date :NA

(71)**Name of Applicant :**
1)NITTA CORPORATION
Address of Applicant :4 26 Sakuragawa 4 chome Naniwa ku Osaka shi Osaka 5560022 Japan
(72)**Name of Inventor :**
1)YOSHIDA Takahiko
2)SHIMIZU Shoji
3)MATSUMOTO Akihiko

(57) Abstract :
In the belt according to the present invention, the whole or a part of a belt body is formed from a thermoplastic resin composition (C) comprising a thermoplastic resin (A) and a modified ethylene copolymer (B) dispersed and contained therein. The modified ethylene copolymer (B) is preferably a copolymer, modified with an unsaturated carboxylic acid or a derivative thereof, of ethylene with at least one monomer component selected from (i) olefin components except for ethylene, (ii) diene components and (iii) ester components having an ethylenically unsaturated group. The belt according to the present invention hardly causes abrasion, damage, cracks, breakage and the like on the belt body and is remarkably excellent in durability, even if the belt is used at a high load for a long time.

No. of Pages : 86 No. of Claims : 8

(12) PATENT APPLICATION PUBLICATION
(19) INDIA
(22) Date of filing of Application :30/09/2013
(21) Application No.8479/DELNP/2013 A
(43) Publication Date : 19/12/2014

(54) Title of the invention : SPUNLACED NONWOVENS AS HOOK AND LOOP FASTENER COMPONENT

(51) International classification :A61F13/62,D04H3/16,A61F13/15
(31) Priority Document No :11002732.3
(32) Priority Date :01/04/2011
(33) Name of priority country :EPO
(86) International Application No :PCT/EP2012/001381
Filing Date :29/03/2012
(87) International Publication No :WO 2012/130454
(61) Patent of Addition to Application Number :NA
Filing Date :NA
(62) Divisional to Application Number :NA
Filing Date :NA

(71)**Name of Applicant :**
1)RKW SE
Address of Applicant :Nachtweideweg 1 7 67227 Frankenthal Germany
(72)**Name of Inventor :**
1)KIRSCH Andreas
2)B–RMANN Ludwig
3)SCHREINER G¼nter
4)EPPING Reinhard
5)KUHN Ludger
6)PIEPENPOTT Michael

(57) Abstract :
The present invention relates to the use of a spunlaced nonwoven fabric made of continuous filaments as loop material for hook and loop fasteners. The invention also relates to a loop material made of a nonwoven fabric and the production thereof

No. of Pages : 21 No. of Claims : 15

(12) PATENT APPLICATION PUBLICATION
(19) INDIA
(22) Date of filing of Application :30/09/2013
(21) Application No.8481/DELNP/2013 A
(43) Publication Date : 19/12/2014

(54) Title of the invention : SELF RETAINING VARIABLE LOOP SUTURES

(51) International classification :A61B17/04,A61B17/06,A61L17/14
(31) Priority Document No :61/466924
(32) Priority Date :23/03/2011
(33) Name of priority country :U.S.A.
(86) International Application No :PCT/US2012/030441
Filing Date :23/03/2012
(87) International Publication No :WO 2012/129534
(61) Patent of Addition to Application Number :NA
Filing Date :NA
(62) Divisional to Application Number :NA
Filing Date :NA

(71)**Name of Applicant :**
1)ETHICON LLC
Address of Applicant :475 Calle C Suite 401 Los Frailes Industrial Park Guaynabo Puerto Rico 00969
(72)**Name of Inventor :**
1)GROSS Jeffrey M.
2)DRUBETSKY Lev
3)DAGOSTINO William L.
4)HUNTER William L.

(57) Abstract :
A suture having a first end for penetrating tissue an elongated suture body having a periphery; a plurality of retainers on the periphery and a second end having a variable loop of variable circumference wherein the variable loop includes a fixed loop slidably engaging the elongated body for slidingly varying the circumference of the variable loop and wherein the first end may pass through the variable loop to secure tissue as an anchor the anchor preventing movement of the suture in the direction of deployment of the first end.

No. of Pages : 53 No. of Claims : 20

(12) PATENT APPLICATION PUBLICATION
(19) INDIA
(22) Date of filing of Application :30/09/2013
(21) Application No.8482/DELNP/2013 A
(43) Publication Date : 19/12/2014

(54) Title of the invention : METHOD OF SYSTEM AND COMPUTER PROGRAM FOR MACHINE CUTTING SEVERAL PARTS OF A PIECE OF MATERIAL USING CONTROLLING RULES AND VARIABLES FOR CUTTING

(51) International classification	:B23K7/00,B23K9/013,B23K10/00
(31) Priority Document No	:NA
(32) Priority Date	:NA
(33) Name of priority country	:NA
(86) International Application No	:PCT/EP2011/055438
Filing Date	:07/04/2011
(87) International Publication No	:WO 2012/136262
(61) Patent of Addition to Application Number	:NA
Filing Date	:NA
(62) Divisional to Application Number	:NA
Filing Date	:NA

(71)**Name of Applicant :**
1)TOMOLOGIC AB
Address of Applicant :Scheelegatan 1 c/o Jordbruksverket 1tr S 112 23 Stockholm Sweden
(72)**Name of Inventor :**
1)NORBERG OHLSSON Magnus

(57) Abstract :
The present invention relates to a method and a system for machine cutting several parts (31 32 33 34) out of a piece of material using a beam cutting technology. The invention provides a set of controlling rules and variables for cutting two dimensional shapes or patterns. One rule or a combination of several rules are used for the cutting operation depending on the shape or pattern to be cut the shape or pattern forming the parts (31 32 33 34) out of the piece of material. The present invention specifically teaches that the set of controlling rules comprises rules for the forming of a cluster (3A) of parts with free form shapes the parts being positioned so close to each other so that only the thickness of one cut from the cutting beam is found between adjacent parts whenever the shape of the parts allows it.

No. of Pages : 37 No. of Claims : 47

(12) PATENT APPLICATION PUBLICATION
(19) INDIA
(22) Date of filing of Application :26/09/2013
(21) Application No.8409/DELNP/2013 A
(43) Publication Date : 19/12/2014

(54) Title of the invention : MANUFACTURE AND USE OF A COMPOSITE MATERIAL COMPRISING FIBRES AND AT LEAST ONE VINYL CHLORIDE POLYMER

(51) International classification :C08J5/02,C08J5/04,C08J5/18
(31) Priority Document No :1153150
(32) Priority Date :11/04/2011
(33) Name of priority country :France
(86) International Application No :PCT/EP2012/056306
Filing Date :05/04/2012
(87) International Publication No :WO 2012/139972
(61) Patent of Addition to Application Number :NA
Filing Date :NA
(62) Divisional to Application Number :NA
Filing Date :NA

(71)**Name of Applicant :**
1)SOLVAY SA
Address of Applicant :Rue de Ransbeek 310 B 1120 Bruxelles Belgium
(72)**Name of Inventor :**
1)BLOYAERT Claudine
2)VAN LOOCK Fran§ois
3)MARTINZ Daniel

(57) Abstract :
Process for manufacturing a composite material comprising fibres and at least one vinyl chloride polymer comprising the immersion of the fibres in a hydrosol of said polymer in order to obtain fibres coated with said hydrosol followed by the drying and gelling of said hydrosol coated on the fibres. Composite material and use thereof for forming articles or for manufacturing reinforcing objects. Profiles reinforced by this composite material.

No. of Pages : 22 No. of Claims : 15

(12) PATENT APPLICATION PUBLICATION
(19) INDIA
(22) Date of filing of Application :30/09/2013
(21) Application No.8484/DELNP/2013 A
(43) Publication Date : 19/12/2014

(54) Title of the invention : CYCLOID ROTOR ENGINE

(51) International classification :F01C1/22,F01C19/00
(31) Priority Document No :61/469009
(32) Priority Date :29/03/2011
(33) Name of priority country :U.S.A.
(86) International Application No :PCT/US2012/031324
Filing Date :29/03/2012
(87) International Publication No :WO 2012/135556
(61) Patent of Addition to Application Number :NA
Filing Date :NA
(62) Divisional to Application Number :NA
Filing Date :NA

(71)**Name of Applicant :**
1)LIQUIDPISTON INC.
Address of Applicant :1292 Blue Hills Avenue Boomfield CT 06002 U.S.A.
(72)**Name of Inventor :**
1)SHKOLNIK Nikolay
2)SHKOLNIK Alexander C.

(57) Abstract :
A rotary engine has a cycloid rotor and a sealing grid including a face seal that rotates with the rotor and including other seals that do not rotate with the rotor. As the rotor rotates within a housing the rotor housing and seal grid form at least one working chamber between them the chamber undergoing a change from initial volume V1 to V2 which is less than V1 thus compressing a working medium and subsequently expanding to volume V3 which may be larger than V1 such that the chamber volume is a smooth and continuous function of rotor s rotational angle.

No. of Pages : 76 No. of Claims : 17

(12) PATENT APPLICATION PUBLICATION
(19) INDIA
(22) Date of filing of Application :30/09/2013
(21) Application No.8485/DELNP/2013 A
(43) Publication Date : 19/12/2014

(54) Title of the invention : PROCESS FOR HYDROGENATING NITRILES

(51) International classification :C07C209/48
(31) Priority Document No :11159126.9
(32) Priority Date :22/03/2011
(33) Name of priority country :EPO
(86) International Application No :PCT/EP2012/054755
Filing Date :19/03/2012
(87) International Publication No :WO 2012/126869
(61) Patent of Addition to Application Number :NA
Filing Date :NA
(62) Divisional to Application Number :NA
Filing Date :NA

(71)**Name of Applicant :**
1)BASF SE
Address of Applicant :67056 Ludwigshafen Germany
(72)**Name of Inventor :**
1)WIGBERS Christof Wilhelm
2)MLLER Christoph
3)M„GERLEIN Wolfgang
4)ERNST Martin
5)HEIDEMANN Thomas
6)MELDER Johann Peter
7)K–NIGSMANN Lucia
8)JOSHI Milind
9)BEY Oliver
10)STEIN Bernd

(57) Abstract :
The present invention relates to a process for hydrogenating organic nitriles by means of hydrogen in the presence of a catalyst in a reactor where the shaped body catalyst is arranged in a fixed bed wherein the shaped body in the shape of spheres or rods has in each case a diameter of 3 mm or less in the shape of tablets a height of 4 mm or less and in the case of all other geometries in each case has an equivalent diameter L = 1/a of 0.70 mm or less where a is the external surface area per unit volume (mm/mm) with: (I) where A is the external surface area of the catalyst particle (mm) and V is the volume of the catalyst particle (mm). The present invention further relates to a process for preparing downstream products of isophoronediamine (IPDA) or N N dimethylaminopropylamine (DMAPA) from amines prepared according to the invention.

No. of Pages : 23 No. of Claims : 15

(12) PATENT APPLICATION PUBLICATION
(19) INDIA
(22) Date of filing of Application :30/09/2013
(21) Application No.8486/DELNP/2013 A
(43) Publication Date : 19/12/2014

(54) Title of the invention : PROCESS FOR THE PREPARATION OF AN ACCELERATOR SOLUTION

(51) International classification :C08K5/00,C08F299/04,C08K3/00
(31) Priority Document No :11159564.1
(32) Priority Date :24/03/2011
(33) Name of priority country :EPO
(86) International Application No :PCT/EP2012/054933
Filing Date :21/03/2012
(87) International Publication No :WO 2012/126919
(61) Patent of Addition to Application Number :NA
Filing Date :NA
(62) Divisional to Application Number :NA
Filing Date :NA

(71)**Name of Applicant :**
1)Akzo Nobel Chemicals International B.V.
Address of Applicant :Stationsstraat 77 NL 3811 MH Amersfoort Netherlands
(72)**Name of Inventor :**
1)REIJNDERS Johannes Martinus Gerardus Maria
2)KOERS Frederik Willem Karel
3)TALMA Auke Gerardus

(57) Abstract :
Process for the preparation of an accelerator solution suitable for forming a redox system with peroxides comprising the steps of heating a liquid formulation comprising a hydroxy functional solvent and a nitrogen containing base to a temperature in the range 50 200°C followed by adding a transition metal salt or complex to said heated formulation.

No. of Pages : 17 No. of Claims : 8

(12) PATENT APPLICATION PUBLICATION
(19) INDIA
(22) Date of filing of Application :30/09/2013
(21) Application No.8487/DELNP/2013 A
(43) Publication Date : 19/12/2014

(54) Title of the invention : METHOD OF MEASURING A SKIN AGENT TRANSFERRED TO SKIN

(51) International classification :A61K8/18,A61L15/16,A61F13/511
(31) Priority Document No :13/079444
(32) Priority Date :04/04/2011
(33) Name of priority country :U.S.A.
(86) International Application No :PCT/US2012/031951
Filing Date :03/04/2012
(87) International Publication No :WO 2012/138633
(61) Patent of Addition to Application Number :NA
Filing Date :NA
(62) Divisional to Application Number :NA
Filing Date :NA

(71)**Name of Applicant :**
1)THE PROCTER & GAMBLE COMPANY
Address of Applicant :One Procter & Gamble Plaza Cincinnati Ohio 45202 U.S.A.
(72)**Name of Inventor :**
1)WARREN Raphael

(57) Abstract :
A method for measuring an amount of a skin agent transferred from an absorbent structure to an area of skin. An absorbent structure that includes a skin agent is provided and is applied to an area of skin. A portion of the skin agent transfers from the absorbent article to the area of skin. The absorbent article is removed and an extracting medium comprising an extraction component that does not irritate the skin is placed in the area of skin from which the absorbent structure was removed. The extracting medium is removed and the amount of skin agent extracted by the extracting medium is measured.

No. of Pages : 24 No. of Claims : 10

(12) PATENT APPLICATION PUBLICATION
(19) INDIA
(22) Date of filing of Application :27/09/2013
(21) Application No.8447/DELNP/2013 A
(43) Publication Date : 19/12/2014

(54) Title of the invention : COMBINATION REAMER/DRILL BIT FOR SHOULDER ARTHROPLASTY

(51) International classification :A61B17/00,A61F2/40
(31) Priority Document No :13/051026
(32) Priority Date :18/03/2011
(33) Name of priority country :U.S.A.
(86) International Application No :PCT/US2012/029016
Filing Date :14/03/2012
(87) International Publication No :WO 2012/129018
(61) Patent of Addition to Application Number :NA
Filing Date :NA
(62) Divisional to Application Number :NA
Filing Date :NA

(71)**Name of Applicant :**
1)DEPUY SYNTHES PRODUCTS LLC
Address of Applicant :325 Paramount Drive Raynham MA 02767 0350 U.S.A.
(72)**Name of Inventor :**
1)LAPPIN Kyle
2)DE WILDE Lieven

(57) Abstract :
An instrumentation kit for use in preparing a shoulder to receive a glenoid component in one embodiment includes at least one combination device the combination device including a boring section configured to form a first bore in a glenoid a drive section operably connected to the boring section a reaming section positioned proximally from the boring section and operably connected to the drive section the reaming section configured to ream a portion of the glenoid and at least one drill guide configured to guide a drill bit and positioned so as to guide the drill bit to form a second bore at a location spaced apart from the first bore wherein the reaming section and the boring section are positioned with respect to each other such that the boring section forms the first bore and the reaming section simultaneously reams a portion of the glenoid adjacent to the first bore.

No. of Pages : 34 No. of Claims : 11

(12) PATENT APPLICATION PUBLICATION
(19) INDIA
(22) Date of filing of Application :30/09/2013
(21) Application No.8490/DELNP/2013 A
(43) Publication Date : 19/12/2014

(54) Title of the invention : MOVING BED REACTOR

(51) International classification :C10J3/12,C10J3/42,C10J3/30
(31) Priority Document No :10 2011 014 349.1
(32) Priority Date :18/03/2011
(33) Name of priority country :Germany
(86) International Application No :PCT/EP2012/001181
Filing Date :16/03/2012
(87) International Publication No :WO 2012/126595
(61) Patent of Addition to Application Number :NA
Filing Date :NA
(62) Divisional to Application Number :NA
Filing Date :NA

(71)**Name of Applicant :**
1)ECOLOOP GMBH
Address of Applicant :Geheimrat Ebert Strasse 12 38640 Goslar Germany
(72)**Name of Inventor :**
1)STUMP Thomas
2)BAUMANN Leonhard
3)M–LLER Roland
4)ULBRICH Gunter
5)VON BEOECZY Thomas

(57) Abstract :
The apparatus serves to thermally separate carbon rich substances in a moving bed reactor (1) through which a bulk material (6) passes. A vertical bulk material column (5) for supplying the material is supplemented by a bulk material column for removing material wherein the widths and heights of the bulk material columns (5 13) and the composition of the bulk material (6) are selected in such a manner that sealing of the interior of the reactor is brought about by an internal pressure loss in the columns (5 13). At the same time a stream of bulk material is made possible wherein a first cavity (11) is provided in the upper reactor region and a second cavity (9) is provided in the lower reactor region between which cavities a differential pressure of at least 50 mbar is provided said differential pressure being stabilized by the pressure loss via the fill.

No. of Pages : 16 No. of Claims : 15

(12) PATENT APPLICATION PUBLICATION
(19) INDIA
(22) Date of filing of Application :30/09/2013
(21) Application No.8491/DELNP/2013 A
(43) Publication Date : 19/12/2014

(54) Title of the invention : GREASE COMPOSITION

(51) International classification :C10M169/00,C10M101/02,C10M133/16
(31) Priority Document No :2011077836
(32) Priority Date :31/03/2011
(33) Name of priority country :Japan
(86) International Application No :PCT/JP2012/057802
Filing Date :26/03/2012
(87) International Publication No :WO 2012/133345
(61) Patent of Addition to Application Number :NA
Filing Date :NA
(62) Divisional to Application Number :NA
Filing Date :NA

(71)**Name of Applicant :**
1)JX Nippon Oil & Energy Corporation
Address of Applicant :6 3 Otemachi 2 chome Chiyoda ku Tokyo 1008162 Japan
(72)**Name of Inventor :**
1)AYAME Yusuke
2)KUROSAWA Osamu
3)SAKAMOTO Kiyomi

(57) Abstract :
The present invention provides a grease composition containing at least one lubricating base oil selected from a mineral oil and a synthetic oil, and 1 to 40% by mass of a thickener and 0.5 to 15% by 5 mass of an alkenyl succinimide based on the total amount of the grease composition, the grease composition being used for a lubricating part in which at least one of members is made of a non-ferrous metal. According to the grease composition of the present invention, galling (seizure) and wear can be sufficiently suppressed and sliding properties 10 can be achieved at a high level even in the case where sliding is performed under extreme pressure conditions where a sliding part having a non-ferrous metal is subjected to a high load.

No. of Pages : 26 No. of Claims : 6

(12) PATENT APPLICATION PUBLICATION
(19) INDIA
(22) Date of filing of Application :30/09/2013
(21) Application No.8492/DELNP/2013 A
(43) Publication Date : 19/12/2014

(54) Title of the invention : METALLIC HOLLOW COLUMN LIKE MEMBER

(51) International classification :B62D21/15
(31) Priority Document No :2011074302
(32) Priority Date :30/03/2011
(33) Name of priority country :Japan
(86) International Application No :PCT/JP2012/058681
Filing Date :30/03/2012
(87) International Publication No :WO 2012/133822
(61) Patent of Addition to Application Number :NA
Filing Date :NA
(62) Divisional to Application Number :NA
Filing Date :NA

(71)**Name of Applicant :**
1)NIPPON STEEL & SUMITOMO METAL CORPORATION
Address of Applicant :6 1 Marunouchi 2 chome Chiyoda ku Tokyo 1008071 Japan
(72)**Name of Inventor :**
1)HIROSE Satoshi
2)ARIGA Takashi
3)YONEMURA Shigeru

(57) Abstract :
A metallic hollow columnar member with a polygonal cross-section having at least five vertices and sides 5 extending between the vertices, is disclosed. The polygonal cross-section is divided by two vertices (A, B) with small inside angles into two perimeter segments with a perimeter comprising one or more sides, and at least one of the two perimeter segments contains at least four 10 sides. The respective inside angles of at least three vertices (V(i)) included in the perimeter segment which includes the at least four sides are equal to or less than 180°, the distance (SS(i)) between each of the at least three vertices (V(i)) and a straight line (L) 15 connecting the two vertices (A, B) is shorter than 1/2 of the distance between the two vertices (A, B), and the inside angle of the vertex (C) with the smallest inside angle among the at least three vertices (V(i)) is larger than the inside angles of the two vertices (A, B). 20 Vertices (VI) are present on the perimeter segment including the at least four sides, respectively between the vertex (C) with the smallest inside angle among the at least three vertices (V(i)) and one (A) of the two vertices (A, B), and between the vertex (C) with the 25 smallest inside angle and the other (B) of the two vertices (A, B), said vertices (VI) having inside angles larger than the inside angle of the vertex (C) with the smallest inside angle.

No. of Pages : 33 No. of Claims : 3

(12) PATENT APPLICATION PUBLICATION
(19) INDIA
(22) Date of filing of Application :27/09/2013
(21) Application No.8429/DELNP/2013 A
(43) Publication Date : 19/12/2014

(54) Title of the invention : DRIVE DEVICE FOR ELECTRIC VEHICLE

(51) International classification :H02K5/22
(31) Priority Document No :2011049189
(32) Priority Date :07/03/2011
(33) Name of priority country :Japan
(86) International Application No :PCT/JP2011/055397
Filing Date :08/03/2011
(87) International Publication No :WO 2012/120649
(61) Patent of Addition to Application Number :NA
Filing Date :NA
(62) Divisional to Application Number :NA
Filing Date :NA

(71)**Name of Applicant :**
1)NTN CORPORATION
Address of Applicant :3 17 Kyomachibori 1 chome Nishi ku Osaka shi Osaka 5500003 Japan
(72)**Name of Inventor :**
1)SUZUKI Minoru
2)ISHIKAWA Aiko
3)MAKINO Tomoaki

(57) Abstract :
An object of the present invention is to achieve reduction in cost and size of power supply means for an electric motor by obviating the need of a power supply connector therefor as an independent part. In a drive device for an electric vehicle including: a speed reduction unit 12 including an input shaft 13 driven by output of an electric motor 11; a hub unit 15 rotationally driven by an output member 14 of the speed reduction unit 12; and a housing 16 accommodating the electric motor 11 and the speed reduction unit 12, there is .provided with a power supply terminal box 76 made up of: an accommodation recessed portion 94 provided in a rear end surface of the housing 16; a power supply terminal 82 provided inside the accommodation recessed portion 94; a communication hole 95 in communication with the accommodation recessed portion 94 and an interior of the housing 16; and a cover member 96 of the accommodation recessed portion 94.

No. of Pages : 52 No. of Claims : 12

(12) PATENT APPLICATION PUBLICATION
(19) INDIA
(22) Date of filing of Application :30/09/2013
(21) Application No.8499/DELNP/2013 A
(43) Publication Date : 19/12/2014

(54) Title of the invention : GAS TURBINE ASSEMBLY AND CORRESPONDING OPERATING METHOD

(51) International classification :F23C6/04,F02C7/141,F02C7/228
(31) Priority Document No :636/11
(32) Priority Date :08/04/2011
(33) Name of priority country :Switzerland
(86) International Application No :PCT/EP2012/056323
Filing Date :05/04/2012
(87) International Publication No :WO 2012/136787
(61) Patent of Addition to Application Number :NA
Filing Date :NA
(62) Divisional to Application Number :NA
Filing Date :NA

(71)**Name of Applicant :**
1)ALSTOM TECHNOLOGY LTD
Address of Applicant :Brown Boveri Strasse 7 CH 5400 Baden Switzerland
(72)**Name of Inventor :**
1)MARMILIC Robert
2)HELLAT Jaan
3)FREITAG Ewald
4)EROGLU Adnan

(57) Abstract :
The invention relates to a gas turbine assembly which substantially consists of at least one compressor, at least one first burner (8, 201), at least one second burner (9, 202) that is connected downstream of the first burner, and at least one turbine (5) that is connected downstream of the second burner. At least the first and second burner (8, 9) form a component of a tubular or quasi-tubular combustion chamber element (100, 200, 300) in the flow direction of the combustion path of said burners, said combustion chamber element being closed or quasi-closed and extending between the compressor (2) and the turbine (5). The combustion chamber elements are arranged around the rotor of the gas turbine assembly in the shape of a ring. 23

No. of Pages : 27 No. of Claims : 33

(12) PATENT APPLICATION PUBLICATION
(19) INDIA
(22) Date of filing of Application :30/09/2013
(21) Application No.8500/DELNP/2013 A
(43) Publication Date : 19/12/2014

(54) Title of the invention : COMBINED CYCLE POWER PLANT

(51) International classification :F01D25/24,F01K17/02,F01K23/10
(31) Priority Document No :00349/11
(32) Priority Date :01/03/2011
(33) Name of priority country :Switzerland
(86) International Application No :PCT/EP2012/053351
Filing Date :28/02/2012
(87) International Publication No :WO 2012/116980
(61) Patent of Addition to Application Number :NA
Filing Date :NA
(62) Divisional to Application Number :NA
Filing Date :NA

(71)**Name of Applicant :**
1)ALSTOM TECHNOLOGY LTD
Address of Applicant :Brown Boveri Strasse 7 CH 5400 Baden Switzerland
(72)**Name of Inventor :**
1)SACKMANN Hans Juergen
2)BOHTZ Christian Joachim
3)LEONE Giovanni
4)NIELSEN Henrik

(57) Abstract :
A combined cycle power plant (1) with a gas and steam turbine system (GT ST) arranged on a single shaft (2) and integrated with a cogeneration plant (100) having a heat consumer such as a district heating system or industrial plant comprises one or more steam extractions at an intermediate pressure steam turbine (7) that are arranged at the upper casing half shell (7) of the turbine and extraction steam lines (11 12) that lead the extracted steam to heat exchangers (31 32) of the cogeneration plant (100). The steam extraction outlets are arranged either singly at or near the uppermost point of the casing or in pairs to either side of the uppermost point of the casing. The specific arrangement of the extractions allows a floor mounting of the single shaft combined cycle power plant (1) and as such a cost and space efficient realization of the power plant.

No. of Pages : 18 No. of Claims : 12

(12) PATENT APPLICATION PUBLICATION
(19) INDIA
(22) Date of filing of Application :30/09/2013
(21) Application No.8501/DELNP/2013 A
(43) Publication Date : 19/12/2014

(54) Title of the invention : OIL IN WATER EMULSIONS COMPRISING A POLYUNSATURATED FATTY ACID AND METHODS OF MAKING THE SAME

(51) International classification :A61K8/06
(31) Priority Document No :13/079252
(32) Priority Date :04/04/2011
(33) Name of priority country :U.S.A.
(86) International Application No :PCT/US2012/031872
Filing Date :02/04/2012
(87) International Publication No :WO 2012/141933
(61) Patent of Addition to Application Number :NA
Filing Date :NA
(62) Divisional to Application Number :NA
Filing Date :NA

(71)**Name of Applicant :**
1)DSM IP Assets B. V.
Address of Applicant :Het Overloon I NL 6411 TE Heerlen Netherlands
(72)**Name of Inventor :**
1)WANG NOLAN Wei
2)HURST Bradley Martin
3)LEE Sin Wai
4)NEEDHAM Micah
5)SU Gang
6)MAI Jimbin

(57) Abstract :
The present invention relates to stable oil in water emulsions comprising a polyunsaturated fatty acid an emulsifier water a metal chelating agent and an antioxidant and processes for preparing the stable oil in water emulsions. The stable oil in water emulsions are substantially free from coalescence flocculation Ostwald ripening and creaming for a period of at least five months at a temperature of about 4 °C.

No. of Pages : 39 No. of Claims : 36

(12) PATENT APPLICATION PUBLICATION
(19) INDIA
(22) Date of filing of Application :30/09/2013
(21) Application No.8483/DELNP/2013 A
(43) Publication Date : 19/12/2014

(54) Title of the invention : METHOD FOR LOADING A WEAPON IN LINE WITH THE RATE OF FIRE

(51) International classification :F41A9/27
(31) Priority Document No :10 2011 017 117.7
(32) Priority Date :14/04/2011
(33) Name of priority country :Germany
(86) International Application No :PCT/EP2012/055201
Filing Date :23/03/2012
(87) International Publication No :WO 2012/139871
(61) Patent of Addition to Application Number :NA
Filing Date :NA
(62) Divisional to Application Number :NA
Filing Date :NA

(71)**Name of Applicant :**
1)RHEINMETALL AIR DEFENCE AG
Address of Applicant :Birchstrasse 155 CH 8050 Z¼rich Switzerland
(72)**Name of Inventor :**
1)GERBER Michael
2)VONLANTHEN Alfred

(57) Abstract :
According to the invention, the revolver cylinder is rotated at least approximately at a speed that corresponds to the normal rate of fire of the weapon. When a predetermined loading step is reached, the trigger of the weapon is controlled such that fire can be opened essentially without delay. The weapon is fired without break immediately after (with) the 10 loading process. At the same time, the weapon is transferred, thus only directly before firing, from a secure SAFE state to the CHARGED state, whereby the safety standards of the weapon are significantly improved. The time during which the weapon is in the state of operational and firing readiness and not in the SAFE state is minimized or entirely eliminated, 15 which considerably increases the operating safety. Extending the time in the SAFE state allows the level of testing for the weapon (for example for the trigger) to be greater, which in turn results in greater reliability of the weapon.

No. of Pages : 19 No. of Claims : 7

(12) PATENT APPLICATION PUBLICATION
(19) INDIA
(22) Date of filing of Application :30/09/2013
(21) Application No.8510/DELNP/2013 A
(43) Publication Date : 19/12/2014

(54) Title of the invention : TRPM5 INHIBITORS SUPPORT BODY WEIGHT REDUCTION WITHOUT REDUCING FOOD INTAKE

(51) International classification :A61K31/49,A23L1/00,A23L1/29
(31) Priority Document No :11160171.2
(32) Priority Date :29/03/2011
(33) Name of priority country :EPO
(86) International Application No :PCT/EP2012/055731
Filing Date :29/03/2012
(87) International Publication No :WO 2012/131003
(61) Patent of Addition to Application Number :NA
Filing Date :NA
(62) Divisional to Application Number :NA
Filing Date :NA

(71)**Name of Applicant :**
1)NESTEC S.A.
Address of Applicant :Av. Nestl 55 CH 1800 Vevey Switzerland
(72)**Name of Inventor :**
1)DAMAK Sami
2)CETTOUR ROSE Philippe
3)LE COUTRE Johannes

(57) Abstract :
The present invention relates to the field of weight management and the prevention and/or treatment of metabolic disorders. In particular the present invention provides a composition comprising at least one Trpm5 inhibitor which is effective in the treatment of prevention of metabolic disorders or risk factors thereof such as overweightness or obesity without having to reduce food intake below metabolic needs.

No. of Pages : 22 No. of Claims : 15

(12) PATENT APPLICATION PUBLICATION
(19) INDIA
(22) Date of filing of Application :30/09/2013
(21) Application No.8512/DELNP/2013 A
(43) Publication Date : 19/12/2014

(54) Title of the invention : SLOT DESIGN FOR FLEXIBLE AND EXPANDABLE SYSTEM ARCHITECTURE

(51) International classification :G06F13/40,H01R13/00
(31) Priority Document No :13/079912
(32) Priority Date :05/04/2011
(33) Name of priority country :U.S.A.
(86) International Application No :PCT/US2012/031350
Filing Date :30/03/2012
(87) International Publication No :WO 2012/138550
(61) Patent of Addition to Application Number :NA
Filing Date :NA
(62) Divisional to Application Number :NA
Filing Date :NA

(71)**Name of Applicant :**
1)ADVANCED MICRO DEVICES INC.
Address of Applicant :P.O. Box 3453 One AMD Place Sunnyvale California 94088 U.S.A.
(72)**Name of Inventor :**
1)BINGI Ravi B.
2)LAM Ranger H.
3)TALBERT Jason R.
4)HURRY Pravind K.
5)LONGHENRY Brian E.
6)STEINBACH Andrew W.
7)GRUGER Jeff H.

(57) Abstract :
An apparatus includes a printed circuit board including a connector footprint comprising a first footprint portion operative to receive a first connector portion and a second footprint portion operative to receive a second connector portion. The first footprint portion is compliant with a first communications link type and the first and second footprint portions are jointly compliant with a second communications link type. The printed circuit board includes first conductive traces coupled to the first footprint portion and a first device footprint. The first conductive traces are selectively configurable according to a selected one of the first and second communications link types. The printed circuit board includes a second conductive traces coupled to the second footprint portion and the first device footprint. In at least one embodiment of the apparatus the first communications link type is AC coupled and the second communications link type is DC coupled.

No. of Pages : 19 No. of Claims : 16

(12) PATENT APPLICATION PUBLICATION
(19) INDIA
(22) Date of filing of Application :30/09/2013
(21) Application No.8513/DELNP/2013 A
(43) Publication Date : 19/12/2014

(54) Title of the invention : SPARK PLUG ELECTRODE MATERIAL AND SPARK PLUG

(51) International classification :C22C19/00
(31) Priority Document No :10 2011 007 532.1
(32) Priority Date :15/04/2011
(33) Name of priority country :Germany
(86) International Application No :PCT/EP2012/052563
Filing Date :15/02/2012
(87) International Publication No :WO 2012/139791
(61) Patent of Addition to Application Number :NA
Filing Date :NA
(62) Divisional to Application Number :NA
Filing Date :NA

(71)**Name of Applicant :**
1)ROBERT BOSCH GMBH
Address of Applicant :Postfach 30 02 20 70442 Stuttgart Germany
(72)**Name of Inventor :**
1)BAUS Simone

(57) Abstract :
The invention relates to a spark plug electrode material containing nickel, silicon, and copper, wherein the electrode material, if used correctly, forms a nickel oxide layer from nickel oxide crystals on at least a part of the surface thereof, wherein the crystal boundary phase of the nickel oxide crystals includes silicon and/or silicon oxide.

No. of Pages : 17 No. of Claims : 17

(12) PATENT APPLICATION PUBLICATION
(19) INDIA
(22) Date of filing of Application :30/09/2013
(21) Application No.8514/DELNP/2013 A
(43) Publication Date : 19/12/2014

(54) Title of the invention : FORMAT ADJUSTMENT DEVICE

(51) International classification :B65B59/00,B65B43/42
(31) Priority Document No :10 2011 007 488.0
(32) Priority Date :15/04/2011
(33) Name of priority country :Germany
(86) International Application No :PCT/EP2012/055863
Filing Date :30/03/2012
(87) International Publication No :WO 2012/139907
(61) Patent of Addition to Application Number :NA
Filing Date :NA
(62) Divisional to Application Number :NA
Filing Date :NA

(71)**Name of Applicant :**
1)ROBERT BOSCH GMBH
Address of Applicant :Postfach 30 02 20 70442 Stuttgart Germany
(72)**Name of Inventor :**
1)FRANK Alexander

(57) Abstract :
A format adjustment device (1) is used to adjust the format of at least one functional element (7) on a packaging machine. The format adjustment device (1) comprises at least one bearing element (2), at least one format gauge (3) comprising at least one mounting section (4) and at least one position element (5) having a stop section (6), and at least one functional element (7) having a connecting section (8). The format gauge (3) can be cormected to the bearing element (2) via the mounting section (4). The stop section (6) of the position element (5) can be cormected to the cormecting section (8) of the functional element (7), such that the position of the at least one functional element (7) relative to the bearing element (2) can be adjusted.

No. of Pages : 29 No. of Claims : 16

(12) PATENT APPLICATION PUBLICATION
(19) INDIA
(22) Date of filing of Application :25/09/2013
(21) Application No.8369/DELNP/2013 A
(43) Publication Date : 19/12/2014

(54) Title of the invention : METHOD FOR GASIFYING SOLID RAW MATERIAL CONTAINING CARBON

(51) International classification :C10J3/06,C10J3/02,C10J3/60
(31) Priority Document No :10 2011 100 202.6
(32) Priority Date :02/05/2011
(33) Name of priority country :Germany
(86) International Application No :PCT/EP2012/000270
Filing Date :21/01/2012
(87) International Publication No :WO 2012/149988
(61) Patent of Addition to Application Number :NA
Filing Date :NA
(62) Divisional to Application Number :NA
Filing Date :NA

(71)**Name of Applicant :**
1)LURGI GMBH
Address of Applicant :Lurgiallee 5 60439 Frankfurt am Main Germany
(72)**Name of Inventor :**
1)SCHMITT Gerhard
2)PLASS Ludolf W.

(57) Abstract :
A method for the gasification of solid, carbonaceous fuel, such as peat, lignite or 5 hard coal, by addition of an oxygen-containing gas and steam, wherein the gas condensate obtained during the washing and cooling of the raw gas is purified in a manner known per se, subsequently evaporated in the waste heat boiler, the steam is purified by thermal or catalytic postcombustion, the steam content of the flue gas formed is condensed out, and the condensate water is treated in a boiler 10 feed water treatment and evaporated by means of the heat produced In the thermal postcombustion, and the steam is supplied to the gasification of the solid feedstocks as process steam.

No. of Pages : 11 No. of Claims : 3

(12) PATENT APPLICATION PUBLICATION
(19) INDIA
(22) Date of filing of Application :30/09/2013
(21) Application No.8521/DELNP/2013 A
(43) Publication Date : 19/12/2014

(54) Title of the invention : METHOD FOR DYEING ARAMID FIBERS AND DYED ARAMID FIBERS

(51) International classification :D06P3/24,D06P1/22,D06P1/30
(31) Priority Document No :2011074295
(32) Priority Date :30/03/2011
(33) Name of priority country :Japan
(86) International Application No :PCT/JP2012/058390
Filing Date :29/03/2012
(87) International Publication No :WO 2012/133662
(61) Patent of Addition to Application Number :NA
Filing Date :NA
(62) Divisional to Application Number :NA
Filing Date :NA

(71)**Name of Applicant :**
1)TOKAI SENKO K.K.
Address of Applicant :1 2 Neshinden Nishibiwajima cho Kiyosu shi Aichi 4520068 Japan
(72)**Name of Inventor :**
1)OIWA Norihiro
2)IMAI Kazuki
3)SAYAMA Shohei
4)ITO Takahiro
5)YASUI Akira

(57) Abstract :
To provide a method for dyeing aramid fibers which is applicable to any of para aramid fibers para coaramid fibers and meta aramid fibers and by which aramid fibers are dyed in practical concentrations required for new applications of aramid fibers. The dyed aramid fibers have suffered neither considerable dyeing unevenness nor a considerable dimensional change nor a considerable decrease in material property. The dyed fibers further have satisfactory color fastness in particular light fastness. Also provided are dyed aramid fibers. [Solution] A dyeing method which comprises one or more dyeing operations each comprising a combination of the following steps: a dye application step in which a vat dye or a sulfur dye is applied to aramid fibers; a solvent treatment step in which the aramid fibers are treated with a treating liquid comprising a polar solvent; and a heat treatment step in which after the solvent treatment step the aramid fibers are heat treated according to need.

No. of Pages : 79 No. of Claims : 9

(12) PATENT APPLICATION PUBLICATION
(19) INDIA
(22) Date of filing of Application :30/09/2013
(21) Application No.8522/DELNP/2013 A
(43) Publication Date : 19/12/2014

(54) Title of the invention : PESSARY DEVICE WITH LONGITUDINAL FLEXIBILITY

(51) International classification :A61F5/48,A61F6/08,A61F6/12
(31) Priority Document No :13/084032
(32) Priority Date :11/04/2011
(33) Name of priority country :U.S.A.
(86) International Application No :PCT/US2012/032956
Filing Date :11/04/2012
(87) International Publication No :WO 2012/142058
(61) Patent of Addition to Application Number :NA
Filing Date :NA
(62) Divisional to Application Number :NA
Filing Date :NA

(71)**Name of Applicant :**
1)THE PROCTER & GAMBLE COMPANY
Address of Applicant :One Procter & Gamble Plaza Cincinnati Ohio 45202 U.S.A.
(72)**Name of Inventor :**
1)KARAPASHA Nancy

(57) Abstract :
An intravaginal pessary device. The device has a top a mid section and a bottom. The device has a sidewall that extends between the top and the bottom and the top the bottom and the sidewall form an outer periphery defining a total area of the device. The top has a first width and the mid section has a second width and the first width is greater than the second width. In addition the top has a first flexibility and the mid section has a second flexibility and the first flexibility is greater than the second flexibility.

No. of Pages : 27 No. of Claims : 10

(12) PATENT APPLICATION PUBLICATION
(19) INDIA
(22) Date of filing of Application :30/09/2013
(21) Application No.8523/DELNP/2013 A
(43) Publication Date : 19/12/2014

(54) Title of the invention : APPARATUS FOR MAKING A MICRO TEXTURED WEB

(51) International classification :B31F1/07,A61F13/15
(31) Priority Document No :13/094559
(32) Priority Date :26/04/2011
(33) Name of priority country :U.S.A.
(86) International Application No :PCT/US2012/034869
Filing Date :25/04/2012
(87) International Publication No :WO 2012/148949
(61) Patent of Addition to Application Number :NA
Filing Date :NA
(62) Divisional to Application Number :NA
Filing Date :NA

(71)**Name of Applicant :**
1)THE PROCTER & GAMBLE COMPANY
Address of Applicant :One Procter & Gamble Plaza Cincinnati Ohio 45202 U.S.A.
(72)**Name of Inventor :**
1)COE Richard George
2)STONE Keith Joseph
3)HILPERT Mathias Johannes
4)BUSCH James William
5)GUST Kasey Marie
6)GUMMALLA Rakesh

(57) Abstract :
Apparatus for making micro textured webs. The apparatus comprises a pair of mated forming structures having a first forming structure (102) a second forming structure (103) and a deformation zone (130); wherein at least the first forming structure (102) comprises voids (30 38) and wherein at least the second forming structure comprises protrusions (20 26) wherein at least one protrusion has center to center spacings of less than about 800 microns with at least three of its adjacent protrusions. The voids (30 38) of the first forming structure (102) are engagable with the protrusions (20 26) of the second forming structure (103) at an engagement position to form a micro textured web (60). In another embodiment the apparatus comprises a pair of counter rotating rollers wherein the first roller comprises grooves having a length wherein the length of the grooves are oriented at an angle different from the machine direction.

No. of Pages : 54 No. of Claims : 15

(12) PATENT APPLICATION PUBLICATION
(19) INDIA
(22) Date of filing of Application :26/09/2013
(21) Application No.8416/DELNP/2013 A
(43) Publication Date : 19/12/2014

(54) Title of the invention : HOT ROLLED STEEL SHEET AND MANUFACTURING METHOD THEREOF

(51) International classification :C22C38/14,C22C38/58,C21D8/02
(31) Priority Document No :2011089520
(32) Priority Date :13/04/2011
(33) Name of priority country :Japan
(86) International Application No :PCT/JP2012/060132
Filing Date :13/04/2012
(87) International Publication No :WO 2012/141290
(61) Patent of Addition to Application Number :NA
Filing Date :NA
(62) Divisional to Application Number :NA
Filing Date :NA

(71)**Name of Applicant :**
1)NIPPON STEEL & SUMITOMO METAL CORPORATION
Address of Applicant :6 1 Marunouchi 2 chome Chiyoda ku Tokyo 1008071 Japan
(72)**Name of Inventor :**
1)YOKOI Tatsuo
2)SHUTO Hiroshi
3)OKAMOTO Riki
4)FUJITA Nobuhiro
5)NAKANO Kazuaki
6)YAMAMOTO Takeshi

(57) Abstract :
In a hot-rolled steel sheet, an average pole density of an orientation group {100}<011> to {223}<110>, which is represented by an arithmetic mean of pole densities of orientations {100}<011>, {116}<110>, {114}<110>, {112}<110>,and {223}<110>is 1.0 to 4.0 and a pole density ofa crystal orientation {332}<113>is 1.0 to 4.8, in a thickness center portion which is a thickness range of 5/8 to 3/8 from the surface of the steel sheet; an average grain size in the thickness center portion is less than or equal toTO)J,m and a grain size of cementite precipitating in a grain boundary of the steel sheet is less than or equal to 2 fj,m; and an average grain size of precipitates containing TiC in grains is less than or equal to 3 nm and a number density per unit area is greater than or equal to 1x10 grains/cm .

No. of Pages : 96 No. of Claims : 14

(12) PATENT APPLICATION PUBLICATION
(19) INDIA
(22) Date of filing of Application :30/09/2013
(21) Application No.8531/DELNP/2013 A
(43) Publication Date : 19/12/2014

(54) Title of the invention : BLISTER PACKAGE FOR PHARMACEUTICAL CARTRIDGES

(51) International classification	:B65D85/42,B65D83/04,B65B7/28
(31) Priority Document No	:61/470982
(32) Priority Date	:01/04/2011
(33) Name of priority country	:U.S.A.
(86) International Application No	:PCT/US2012/031695
Filing Date	:30/03/2012
(87) International Publication No	:WO 2012/135765
(61) Patent of Addition to Application Number	:NA
Filing Date	:NA
(62) Divisional to Application Number	:NA
Filing Date	:NA

(71)**Name of Applicant :**
1)MANNKIND CORPORATION
Address of Applicant :28903 North Avenue Paine Valencia CA 91355 U.S.A.
(72)**Name of Inventor :**
1)BERGEY Michael S.

(57) Abstract :
A blister packaging for a pharmaceutical cartridge or capsule is disclosed.

No. of Pages : 41 No. of Claims : 20

(12) PATENT APPLICATION PUBLICATION
(19) INDIA
(22) Date of filing of Application :01/10/2013
(21) Application No.8534/DELNP/2013 A
(43) Publication Date : 19/12/2014

(54) Title of the invention : FORMULATIONS WITH REDUCED VISCOSITY

(51) International classification :A61K39/00
(31) Priority Document No :61/473121
(32) Priority Date :07/04/2011
(33) Name of priority country :U.S.A.
(86) International Application No :PCT/US2012/032462
Filing Date :06/04/2012
(87) International Publication No :WO 2012/138958
(61) Patent of Addition to Application Number :NA
Filing Date :NA
(62) Divisional to Application Number :NA
Filing Date :NA

(71)**Name of Applicant :**
1)GLAXOSMITHKLINE LLC
Address of Applicant :One Franklin Plaza 200 North 16th Street Philadelphia PA 19102 U.S.A.
(72)**Name of Inventor :**
1)MONCK Myrna A.
2)WONG Man Yi
3)ZHANG Kai

(57) Abstract :
The present invention is directed to a method for reducing the viscosity of a formulation containing citrate and a therapeutic protein and formulations made using the claimed method. The present invention is also directed to a stable formulation produced by any of the methods of the present invention. The present invention is also directed to an article of manufacture comprising a container containing a formulation of the present invention.

No. of Pages : 30 No. of Claims : 40

(12) PATENT APPLICATION PUBLICATION
(19) INDIA
(22) Date of filing of Application :01/10/2013
(21) Application No.8537/DELNP/2013 A
(43) Publication Date : 19/12/2014

(54) Title of the invention : PROCESS FOR PRODUCING TRANS 1233ZD

(51) International classification :C07C17/23,C07C21/18,B01J23/26
(31) Priority Document No :13/090477
(32) Priority Date :20/04/2011
(33) Name of priority country :U.S.A.
(86) International Application No :PCT/US2012/032830
Filing Date :10/04/2012
(87) International Publication No :WO 2012/145188
(61) Patent of Addition to Application Number :NA
Filing Date :NA
(62) Divisional to Application Number :NA
Filing Date :NA

(71)**Name of Applicant :**
1)HONEYWELL INTERNATIONAL INC.
Address of Applicant :Patent Services M/S AB/2B 101 Columbia Road P. O. Box 2245 Morristown New Jersey 07962 2245 U.S.A.
(72)**Name of Inventor :**
1)WANG Haiyou
2)TUNG Hsueh Sung

(57) Abstract :
Trans-1233zd, the trans-isomer of l-chloro-3,3,3-trifluoropropene (HCFO-1233zd) can be used as blowing agents, solvents, cleaning agents, as well as monomers of macromolecule compounds, and can be prepared through the dehydrochlorination of l,l,l-trifluoro-3,3-dichloropropane (HCFC-243fa) with the help of a catalyst. The present invention is directed to an integrated process is proposed to produce trans-1233zd from 243fa, which is consisted of the following four major unit operations: (1) Catalyt ic dehydrochlorination of 243fa into trans/cis-1233zd, (2) HC1 recovery, (3) Catalytic isomerization of cis-1233zd into trans- 1233zzd, and (4) Isolation of trans-1233zd.

No. of Pages : 16 No. of Claims : 9

(12) PATENT APPLICATION PUBLICATION
(19) INDIA
(22) Date of filing of Application :01/10/2013
(21) Application No.8538/DELNP/2013 A
(43) Publication Date : 19/12/2014

(54) Title of the invention : MERCHANDISER

(51) International classification :G07F7/06,G07F9/10,G07F11/04
(31) Priority Document No :13/076531
(32) Priority Date :31/03/2011
(33) Name of priority country :U.S.A.
(86) International Application No :PCT/US2012/025549
Filing Date :17/02/2012
(87) International Publication No:WO 2012/134653
(61) Patent of Addition to Application Number :NA
Filing Date :NA
(62) Divisional to Application Number :NA
Filing Date :NA

(71)**Name of Applicant :**
1)THE COCA COLA COMPANY
Address of Applicant :Patents One Coca cola Plaza NW Atlanta GA 30313 U.S.A.
(72)**Name of Inventor :**
1)CARPENTIER Bart
2)ROEKENS Jurgen
3)DESSING Joost

(57) Abstract :
The present application and the resultant patent provide a merchandiser. The merchandiser may include an ambient compartment with at least one ambient product therein a temperature controlled compartment with at least one temperature controlled product therein and a rotary internal transport system within the temperature controlled compartment so as to dispense a temperature controlled product in response to an ambient product being placed therein..

No. of Pages : 31 No. of Claims : 14

(12) PATENT APPLICATION PUBLICATION
(19) INDIA
(22) Date of filing of Application :01/10/2013
(21) Application No.8540/DELNP/2013 A
(43) Publication Date : 19/12/2014

(54) Title of the invention : METHOD FOR TRANSMITTING A MPLS HEADER METHOD FOR ESTABLISHING A MPLS PATH AND METHOD FOR PERFORMING A HANDOVER OF AN MPLS PATH

(51) International classification :H04L12/56
(31) Priority Document No :NA
(32) Priority Date :NA
(33) Name of priority country :NA
(86) International Application No :PCT/EP2011/001867
Filing Date :13/04/2011
(87) International Publication No :WO 2012/139597
(61) Patent of Addition to Application Number :NA
Filing Date :NA
(62) Divisional to Application Number :NA
Filing Date :NA

(71)**Name of Applicant :**
1)DEUTSCHE TELEKOM AG
Address of Applicant :Friedrich Ebert Allee 140 53113 Bonn Germany
(72)**Name of Inventor :**
1)SCHATZMAYR Rainer

(57) Abstract :
The present invention refers to a method for transmitting a Multi Protocol Label Switching (MPLS) header from a first nodal point to a second nodal point via a mobile communication network in particular a Long Term Evolution network comprising the steps of modifying the Multi Protocol Label Switching header by reducing the size of the Multi Protocol Label Switching header and transmitting the modified Multi Protocol Label Switching header from the first nodal point to the second nodal point by means of an air interface using a dedicated radio bearer. The invention furthermore refers to a method for establishing a Multi Protocol Label Switching (MPLS) path and a method for performing a handover of a Multi Protocol Label Switching (MPLS) path.

No. of Pages : 27 No. of Claims : 15

(12) PATENT APPLICATION PUBLICATION
(19) INDIA
(22) Date of filing of Application :30/09/2013
(21) Application No.8470/DELNP/2013 A
(43) Publication Date : 19/12/2014

(54) Title of the invention : PROXIMITY SENSOR

(51) International classification :H03K17/955,C03C17/34
(31) Priority Document No :61/470571
(32) Priority Date :01/04/2011
(33) Name of priority country :U.S.A.
(86) International Application No :PCT/EP2012/000927
Filing Date :02/03/2012
(87) International Publication No :WO 2012/130372
(61) Patent of Addition to Application Number :NA
Filing Date :NA
(62) Divisional to Application Number :NA
Filing Date :NA

(71)**Name of Applicant :**
1)OERLIKON TRADING AG TRBBACH
Address of Applicant :Hauptstrasse 53 CH 9477 Tr¼bbach Switzerland
(72)**Name of Inventor :**
1)KECKES Antal
2)SCHULER Peter
3)HERMANN Thomas

(57) Abstract :
The present invention relates to an electronic proximity sensor having a decorative surface, characterized in that the decorative surface comprises a semiconductor layer, the thickness of which is between 10nm and 100nm. This coating imparts a desired metallic appearance to the proximity sensor, without the property thereof as a proximity sensor being lost.

No. of Pages : 7 No. of Claims : 12

(12) PATENT APPLICATION PUBLICATION
(19) INDIA
(22) Date of filing of Application :30/09/2013

(21) Application No.8471/DELNP/2013 A
(43) Publication Date : 19/12/2014

(54) Title of the invention : TEST METER WITH A STRIP PORT CONNECTOR CONFIGURED FOR FLUID ENTRAPMENT

(51) International classification :A61B5/00
(31) Priority Document No :13/077786
(32) Priority Date :31/03/2011
(33) Name of priority country :U.S.A.
(86) International Application No :PCT/GB2012/000300
Filing Date :30/03/2012
(87) International Publication No :WO 2012/131312
(61) Patent of Addition to Application Number :NA
Filing Date :NA
(62) Divisional to Application Number :NA
Filing Date :NA

(71)**Name of Applicant :**
1)CILAG GMBH INTERNATIONAL
Address of Applicant :Cilag GmbH International Land is + Gyr Strasse 1 Zug 6300 Switzerland
(72)**Name of Inventor :**
1)FAULKNER Allan
2)NELSON Jonathan
3)FOLEY Nicholas
4)SALTER Simon
5)CROSLAND David Colin
6)TRICKETT Paul
7)FLOWERS Gavin
8)CROFTON Martin

(57) Abstract :
A test meter for use win an analytical test strip for the determination of an analyte (such as glucose) in a bodily fluid sample (e.g. a whole blood sample) includes a test meter housing and a strip port connector. The test meter housing has a distal end with a strip port opening configured to receive the analytical test strip. The strip port connector is integrated with the distal end of the test meter housing and has a distal portion with an analytical test strip guide. The analytical test strip guide has an upper guide surface configured such that an analytical test strip received in the strip port opening is guided and supported by the upper guide surface and also has a liquid entrapment feature configured to direct free liquid that enters the strip port opening away from the upper guide surface and entrap such directed liquid in the distal portion of the strip port connector and/or the distal end of the test meter housing. The strip port connector also has a proximal portion disposed within the test meter housing with the proximal portion having an electrical connector pin configured for operable electrical contact with an analytical test strip received within the strip port opening.

No. of Pages : 23 No. of Claims : 20

(12) PATENT APPLICATION PUBLICATION
(19) INDIA
(22) Date of filing of Application :30/09/2013
(21) Application No.8473/DELNP/2013 A
(43) Publication Date : 19/12/2014

(54) Title of the invention : ENERGY BASED SCISSORS DEVICE

(51) International classification :A61B17/32
(31) Priority Document No :61/467180
(32) Priority Date :24/03/2011
(33) Name of priority country :U.S.A.
(86) International Application No :PCT/US2012/029924
Filing Date :21/03/2012
(87) International Publication No :WO 2012/129292
(61) Patent of Addition to Application Number :NA
Filing Date :NA
(62) Divisional to Application Number :NA
Filing Date :NA

(71)**Name of Applicant :**
1)ETHICON ENDO SURGERY INC.
Address of Applicant :4545 Creek Road Cincinnati OH 45242 U.S.A.
(72)**Name of Inventor :**
1)KIMBALL Cory G.
2)MILLER Matthew C.
3)KROSCHER Nicholas I.
4)DICKERSON Ben
5)DANNAHER William D.

(57) Abstract :
An energy based surgical instrument is configured to permit selective cutting coagulation and fine dissection required in fine and delicate surgical procedures. The scissors grip instrument provides for tube in tube construction (60 70) so the device is useful for both open and minimally invasive procedures. The assembly includes a clamping mechanism including a clamp arm and/or housing which are specifically configured to create a desired level of tissue clamping forces.

No. of Pages : 35 No. of Claims : 20

(12) PATENT APPLICATION PUBLICATION
(19) INDIA
(22) Date of filing of Application :30/09/2013
(21) Application No.8474/DELNP/2013 A
(43) Publication Date : 19/12/2014

(54) Title of the invention : TREATMENT UNIT INSTALLATION AND METHOD FOR THE SURFACE TREATMENT OF ARTICLES

(51) International classification :B05B13/02,B05B13/04,B65G47/53
(31) Priority Document No :10 2011 017 347.1
(32) Priority Date :16/04/2011
(33) Name of priority country :Germany
(86) International Application No :PCT/EP2012/001508
Filing Date :05/04/2012
(87) International Publication No :WO 2012/143093
(61) Patent of Addition to Application Number :NA
Filing Date :NA
(62) Divisional to Application Number :NA
Filing Date :NA

(71)**Name of Applicant :**
1)EISENMANN AG
Address of Applicant :T¼binger Str. 81 71032 Bblingen Germany
(72)**Name of Inventor :**
1)SCHMIDT Roger

(57) Abstract :
A treatment unit for the surface treatment in particular painting of articles in particular of vehicle body parts comprises at least one treatment chamber (16) and a conveying system (52) by means of which articles (14) to be treated can be conveyed into the treatment chamber (16) along a conveying path (70 72 74 76 102 104) through the treatment chamber (16) and back out of the treatment chamber (16). Each article (14) in each position on the conveying path (70 72 74 76 102 104) prescribes a conveying direction (78) tangential to the conveying path (70 72 74 76 102 104). An application system (42) comprises at least one multiaxis application robot (44 46) which takes along with it an application device and can be made to move along a robot path of movement (60 62 88 90). The conveying system (52) and the application system (42) are set up in such a way that the at least one application robot (44 46) can be made to move in relation to the conveying direction (78) of an article (14) optionally with a movement component parallel to the conveying direction (78) of the article (14) and/or a movement component perpendicular to the conveying direction (78) of the article (14). An installation and a method for the surface treatment of articles are also provided.

No. of Pages : 41 No. of Claims : 15

(12) PATENT APPLICATION PUBLICATION
(19) INDIA
(22) Date of filing of Application :30/09/2013
(21) Application No.8489/DELNP/2013 A
(43) Publication Date : 19/12/2014

(54) Title of the invention : A PROCESS FOR THE MANUFACTURE OF A PRODUCT FROM A PLANT MATERIAL

(51) International classification :A23J1/00,A23J1/14,A23L1/20
(31) Priority Document No :PA 2011 70106
(32) Priority Date :01/03/2011
(33) Name of priority country :Denmark
(86) International Application No :PCT/DK2012/050067
Filing Date :01/03/2012
(87) International Publication No :WO 2012/116703
(61) Patent of Addition to Application Number :NA
Filing Date :NA
(62) Divisional to Application Number :NA
Filing Date :NA

(71)**Name of Applicant :**
1)K˜BENHAVNS UNIVERSITET
Address of Applicant :N¸rregade 10 DK 1165 Copenhagen K Denmark
(72)**Name of Inventor :**
1)ANDERSEN Keld Ejdrup
2)S˜RENSEN Jens Christian
3)S˜RENSEN Hilmer
4)S˜RENSEN Anne Dorthe

(57) Abstract :
The present invention relates to a process for the manufacture of a product from a plant material comprising the steps of providing a disrupted plant material comprising <10 %(w/w) starch and <10 %(w/w) oil/lipids; adjusting the pH of the disrupted plant material to a value of pH 3.5 or below to provide an acidic suspension; heating the acidic suspension to a temperature in the range of about 50°C to about 80°C; isolating the product from the heated acidic suspension. The product may be a protein product or a non protein product. In particular the process of the invention provides a protein product with reduced contents of non protein components of negative nutritional value.

No. of Pages : 46 No. of Claims : 44

(12) PATENT APPLICATION PUBLICATION
(19) INDIA
(22) Date of filing of Application :01/10/2013
(21) Application No.8544/DELNP/2013 A
(43) Publication Date : 19/12/2014

(54) Title of the invention : CARBURIZATION RESISTANT METAL MATERIAL

(51) International classification :C22C38/00,C22C30/02,C22C38/58
(31) Priority Document No :2011139994
(32) Priority Date :24/06/2011
(33) Name of priority country :Japan
(86) International Application No :PCT/JP2012/063696
Filing Date :29/05/2012
(87) International Publication No :WO 2012/176586
(61) Patent of Addition to Application Number :NA
Filing Date :NA
(62) Divisional to Application Number :NA
Filing Date :NA

(71)**Name of Applicant :**
1)NIPPON STEEL & SUMITOMO METAL CORPORATION
Address of Applicant :6 1 Marunouchi 2 chome Chiyoda ku Tokyo 1008071 Japan
(72)**Name of Inventor :**
1)NISHIYAMA Yoshitaka
2)OKADA Hirokazu
3)OSUKI Takahiro
4)DAN Etsuo

(57) Abstract :
Disclosed is a carburization resistant metal material suitable as a material for cracking furnaces reforming furnaces heating furnaces heat exchangers or the like used for petroleum or gas refining or in chemical plants the carburization resistant metal material containing by mass% 0.03 0.075% of C 0.6 2.0% of Si 0.05 2.5% of Mn 0.04% or less of P 0.015% or less of S greater than 16.0% to less than 20.0% of Cr 20.0% or greater to less than 30.0% of Ni 0.5 10.0% of Cu 0.15% or less of Al 0.15% or less of Ti 0.005 0.20% of N and 0.02% or less of O (oxygen) with the remainder comprising Fe and impurities. The carburization resistant metal material may further contain one or more types of elements from among Co Mo W Ta B V Zr Nb Hf Mg Ca Y La Ce and Nd.

No. of Pages : 34 No. of Claims : 4

(12) PATENT APPLICATION PUBLICATION
(19) INDIA
(22) Date of filing of Application :01/10/2013
(21) Application No.8545/DELNP/2013 A
(43) Publication Date : 19/12/2014

(54) Title of the invention : PERFORMING A SELECTIVE IP TRAFFIC OFFLOAD PROCEDURE

(51) International classification :H04W36/12
(31) Priority Document No :61/471022
(32) Priority Date :01/04/2011
(33) Name of priority country :U.S.A.
(86) International Application No :PCT/US2012/031162
Filing Date :29/03/2012
(87) International Publication No :WO 2012/135467
(61) Patent of Addition to Application Number :NA
Filing Date :NA
(62) Divisional to Application Number :NA
Filing Date :NA

(71)**Name of Applicant :**
1)INTERDIGITAL PATENT HOLDINGS INC.
Address of Applicant :200 Bellevue Parkway Suite 300 Wilmington Delaware 19809 U.S.A.
(72)**Name of Inventor :**
1)KARAMPATSIS Dimitrios
2)SHAHEEN Kamel M.
3)PATEL Milan

(57) Abstract :
A method and apparatus are described for performing a selected Internet protocol (IP) traffic offload (SIPTO) procedure. A network node (e.g. a mobility management entity (MME) or a serving general packet radio service (GPRS) support node (SGSN)) may receive a packet data network (PDN) connectivity request from a wireless transmit/receive unit (WTRU). A determination may be made to perform SIPTO at a local network and the WTRU may perform a PDN release and reconnection procedure. The determination may be based on at least one of a closed subscriber group (CSG) identity (ID) a home evolved Node B (HeNB) ID or a local network ID. An access network discovery and selection function (ANDSF) may be queried for IP interface selection (OPIIS) rules a local access point name (APN) that supports per flow SIPTO at a local network and IP flows that may be routed to the local APN.

No. of Pages : 66 No. of Claims : 19

(12) PATENT APPLICATION PUBLICATION
(19) INDIA
(22) Date of filing of Application :01/10/2013
(21) Application No.8546/DELNP/2013 A
(43) Publication Date : 19/12/2014

(54) Title of the invention : CONTROLLING INTER CELL INTERFERENCE IN FORWARD ACCES CHANNEL (CELL_FACH) STATE

(51) International classification :H04W72/08
(31) Priority Document No :61/470703
(32) Priority Date :01/04/2011
(33) Name of priority country :U.S.A.
(86) International Application No :PCT/US2012/031756
Filing Date :31/03/2012
(87) International Publication No :WO 2012/135795
(61) Patent of Addition to Application Number :NA
Filing Date :NA
(62) Divisional to Application Number :NA
Filing Date :NA

(71)**Name of Applicant :**
1)INTERDIGITAL PATENT HOLDINGS INC.
Address of Applicant :200 Bellevue Parkway Suite 300 Wilmington DE 19809 U.S.A.
(72)**Name of Inventor :**
1)MARINIER Paul
2)PANI Diana
3)CAVE Christopher

(57) Abstract :
Since common E DCH resources may be assigned from a single Node B uplink macro diversity may not be possible between neighboring Node B s. In addition a user equipment (UE) assigned a common E DCH resource may not be allowed to perform cell reselection. Thus maintaining the assignment of a common E DCH resource to a given UE for more than a few hundred milliseconds may result in unacceptable inter cell interference for example when the UE moves closer to a neighboring cell controlled by a non serving Node B. To overcome inter cell interference and allow a more extensive utilization of the Cell_FACH state a method may be used to detect and/or control inter cell interference.

No. of Pages : 41 No. of Claims : 20

(12) PATENT APPLICATION PUBLICATION
(19) INDIA
(22) Date of filing of Application :27/09/2013
(21) Application No.8460/DELNP/2013 A
(43) Publication Date : 19/12/2014

(54) Title of the invention : METHOD FOR ISOLATING OSTEOPONTIN USING FEEDS CONTAINING CMP OR CASEIN SPECIES

(51) International classification :C07K1/18,C07K14/47,C07K14/52
(31) Priority Document No :11156826.7
(32) Priority Date :03/03/2011
(33) Name of priority country :EPO
(86) International Application No :PCT/EP2012/053748
Filing Date :05/03/2012
(87) International Publication No :WO 2012/117119
(61) Patent of Addition to Application Number :NA
Filing Date :NA
(62) Divisional to Application Number :NA
Filing Date :NA

(71)**Name of Applicant :**
1)Arla Foods Amba
Address of Applicant :S¸nderh¸j 14 DK 8260 Viby J Denmark
(72)**Name of Inventor :**
1)BERTELSEN Hans
2)WEJSE Peter Langborg
3)TRšGVASON Trine

(57) Abstract :
The present invention pertains to a method for isolating osteopontin from a milk derived feed containing caseino macropeptide and/or free beta casein such as e.g. a feed based on milk serum or sweet whey. Particularly the present method involves the use of a narrow window of pH and specific conductance of the milk derived feed which surprisingly has proven to provide a very efficient isolation of osteopontin from chemically complex feeds.

No. of Pages : 40 No. of Claims : 28

(12) PATENT APPLICATION PUBLICATION
(19) INDIA
(22) Date of filing of Application :27/09/2013
(21) Application No.8461/DELNP/2013 A
(43) Publication Date : 19/12/2014

(54) Title of the invention : METHOD FOR ISOLATING OSTEOPONTIN USING CONCENTRATED FEEDS

(51) International classification	:C07K1/18,C07K14/47,C07K14/52
(31) Priority Document No	:11156826.7
(32) Priority Date	:03/03/2011
(33) Name of priority country	:EPO
(86) International Application No	:PCT/EP2012/053749
Filing Date	:05/03/2012
(87) International Publication No	:WO 2012/117120
(61) Patent of Addition to Application Number	:NA
Filing Date	:NA
(62) Divisional to Application Number	:NA
Filing Date	:NA

(71)**Name of Applicant :**
1)Arla Foods Amba
Address of Applicant :S¸nderh¸j 14 DK 8260 Viby J Denmark
(72)**Name of Inventor :**
1)BERTELSEN Hans
2)WEJSE Peter Langborg
3)TRšGVASON Trine

(57) Abstract :
The present invention pertains to a method for isolating osteopontin from milk derived feeds having a high concentration of protein. Particularly the present method involves the use of a narrow window of pH and specific conductance of the milk derived feed which surprisingly has proven to provide a very efficient isolation of osteopontin from chemically complex feeds.

No. of Pages : 39 No. of Claims : 26

(12) PATENT APPLICATION PUBLICATION
(19) INDIA
(22) Date of filing of Application :27/09/2013
(21) Application No.8463/DELNP/2013 A
(43) Publication Date : 19/12/2014

(54) Title of the invention : ARRAY OF PESSARY DEVICES

(51) International classification :A61F2/00
(31) Priority Document No :13/084141
(32) Priority Date :11/04/2011
(33) Name of priority country :U.S.A.
(86) International Application No :PCT/US2012/032099
Filing Date :04/04/2012
(87) International Publication No :WO 2012/141954
(61) Patent of Addition to Application Number :NA
Filing Date :NA
(62) Divisional to Application Number :NA
Filing Date :NA

(71)**Name of Applicant :**
1)THE PROCTER & GAMBLE COMPANY
Address of Applicant :One Procter & Gamble Plaza Cincinnati Ohio 45202 U.S.A.
(72)**Name of Inventor :**
1)KARAPASHA Nancy

(57) Abstract :
An array of non expandable pessary devices. The array includes a first pessary device having a top a base a length a sidewall extending between the top and the base a longitudinal axis a maximum diameter and a minimum diameter that is less than the maximum diameter. The first pessary device has a pressure region adapted to extend between an anterior vaginal wall and a posterior vaginal wall of a user to provide pressure on the user s urethra through the vaginal wall the pressure region comprising the maximum diameter wherein the maximum diameter is less than 25 mm. The array also includes a second pessary device having a top a base a length a sidewall extending between the top and the base a longitudinal axis a maximum diameter and a minimum diameter that is less than the maximum diameter. The second pessary device has a pressure region adapted to extend between an anterior vaginal wall and a posterior vaginal wall of a user to provide pressure on the user s urethra through the vaginal wall the pressure region comprising the maximum diameter wherein the maximum diameter is less than 25 mm. The maximum diameter of the second pessary device can be greater than the maximum diameter of the first pessary device.

No. of Pages : 26 No. of Claims : 11

(12) PATENT APPLICATION PUBLICATION
(19) INDIA
(22) Date of filing of Application :27/09/2013
(21) Application No.8464/DELNP/2013 A
(43) Publication Date : 19/12/2014

(54) Title of the invention : METHOD FOR SCHEDULING TRANSMISSIONS IN A COMMUNICATION NETWORK

(51) International classification :H04W72/12
(31) Priority Document No :13/086685
(32) Priority Date :14/04/2011
(33) Name of priority country :U.S.A.
(86) International Application No :PCT/US2012/032988
Filing Date :11/04/2012
(87) International Publication No :WO 2012/142072
(61) Patent of Addition to Application Number :NA
Filing Date :NA
(62) Divisional to Application Number :NA
Filing Date :NA

(71)**Name of Applicant :**
1)ALCATEL LUCENT
Address of Applicant :3 avenue Octave Grard F 75007 Paris France
(72)**Name of Inventor :**
1)MONOGIOUDIS Pantelis

(57) Abstract :
The method includes assigning a priority to a mobile unit based on a Quality of Service (QoS) class associated with the mobile unit and a score associated with a user of the mobile unit.

No. of Pages : 41 No. of Claims : 10

(12) PATENT APPLICATION PUBLICATION
(19) INDIA
(22) Date of filing of Application :01/10/2013
(21) Application No.8550/DELNP/2013 A
(43) Publication Date : 19/12/2014

(54) Title of the invention : HERMETICALLY SEALED SWITCHGEAR

(51) International classification :H02G5/06,H02B13/02,H02B13/055
(31) Priority Document No :2011082295
(32) Priority Date :01/04/2011
(33) Name of priority country :Japan
(86) International Application No :PCT/JP2012/002141
Filing Date :28/03/2012
(87) International Publication No :WO 2012/137444
(61) Patent of Addition to Application Number :NA
Filing Date :NA
(62) Divisional to Application Number :NA
Filing Date :NA

(71)**Name of Applicant :**
1)KABUSHIKI KAISHA TOSHIBA
Address of Applicant :1 1 Shibaura 1 chome Minato ku Tokyo 1058001 Japan
(72)**Name of Inventor :**
1)NOJIMA Kenichi
2)YASUOKA Takanori
3)ISHIWATA Yutaka

(57) Abstract :
A surface of a high voltage conductor (1) is coated with a resistance film (12) having resistance characteristics. The resistance film (12) comprises a material powder having resistance characteristics or a resin into which the material powder is mixed; and the volume resistivity is set to be 1E7 Ωcm to 1E11 Ωcm.

No. of Pages : 24 No. of Claims : 3

(12) PATENT APPLICATION PUBLICATION
(19) INDIA
(22) Date of filing of Application :01/10/2013
(21) Application No.8551/DELNP/2013 A
(43) Publication Date : 19/12/2014

(54) Title of the invention : SUPERCONDUCTING COIL SUPERCONDUCTING MAGNET AND METHOD FOR MANUFACTURING SUPERCONDUCTING COIL

(51) International classification :H01F6/06,H01F6/00
(31) Priority Document No :2011120092
(32) Priority Date :30/05/2011
(33) Name of priority country :Japan
(86) International Application No :PCT/JP2012/060916
Filing Date :24/04/2012
(87) International Publication No :WO 2012/165085
(61) Patent of Addition to Application Number :NA
Filing Date :NA
(62) Divisional to Application Number :NA
Filing Date :NA

(71)**Name of Applicant :**
1)SUMITOMO ELECTRIC INDUSTRIES LTD.
Address of Applicant :5 33 Kitahama 4 chome Chuo ku Osaka shi Osaka 5410041 Japan
(72)**Name of Inventor :**
1)UENO Eisaku
2)KATO Takeshi

(57) Abstract :
In the present invention an inner circumferential portion is formed by winding one of first and second superconducting wire rods (11,12) each of which has a strip shape. An outer circumferential portion is formed by winding the other one of the first and second superconducting wire rods (11,12) around the inner circumferential portion. A welding portion (74) joins the first and second superconducting wire rods (11,12) with each other between the inner circumferential portion and the outer circumferential portion by welding. The first superconducting wire rod (11) has more strength compared with the second superconducting wire rod (12). The second superconducting wire rod (12) is thinner than the first superconducting wire rod (11).

No. of Pages : 26 No. of Claims : 8

(12) PATENT APPLICATION PUBLICATION
(19) INDIA
(22) Date of filing of Application :27/09/2013
(21) Application No.8439/DELNP/2013 A
(43) Publication Date : 19/12/2014

(54) Title of the invention : METHOD FOR MANUFACTURING SUBSTRATE HAVING TEXTURED STRUCTURE AND METHOD FOR MANUFACTURING ORGANIC EL ELEMENTS USING SAME

(51) International classification :G02B5/18,G02B5/02,G09F9/30
(31) Priority Document No :2011070258
(32) Priority Date :28/03/2011
(33) Name of priority country :Japan
(86) International Application No :PCT/JP2012/057945
Filing Date :27/03/2012
(87) International Publication No :WO 2012/133414
(61) Patent of Addition to Application Number :NA
Filing Date :NA
(62) Divisional to Application Number :NA
Filing Date :NA

(71)**Name of Applicant :**
1)JX Nippon Oil & Energy Corporation
Address of Applicant :6 3 Otemachi 2 chome Chiyoda ku Tokyo 1008162 Japan
(72)**Name of Inventor :**
1)SATO Yusuke
2)NISHIMURA Suzushi

(57) Abstract :
A method for producing a substrate having an irregular concave and convex surface for scattering light includes: manufacturing a substrate 100 having the irregular concave and convex surface; irradiating the concave and convex surface 100a of the manufactured substrate with inspection light 122a from a direction oblique to a normal direction and detecting returning light of the inspection light returned from the concave and convex surface by a light-receiving element 124 provided in the normal direction of the concave and convex surface; and judging unevenness of luminance of the concave and convex surface by an image processing device 126 based on light intensity of the returning light received. An organic EL element which includes a diffraction-grating substrate having an irregular concave and convex surface is produced with a high throughput.

No. of Pages : 89 No. of Claims : 21

(12) PATENT APPLICATION PUBLICATION
(19) INDIA
(22) Date of filing of Application :01/10/2013
(21) Application No.8555/DELNP/2013 A
(43) Publication Date : 19/12/2014

(54) Title of the invention : NATURAL DERIVATIVE OF THE *LACTOBACILLUS JOHNSONII* STRAIN CNCM I 1225 DEFICIENT IN D LACTIC ACID PRODUCTION

(51) International classification :C12R1/225,A23C9/123,A61K38/44
(31) Priority Document No :11160146.4
(32) Priority Date :29/03/2011
(33) Name of priority country:EPO
(86) International Application No :PCT/EP2012/055678
Filing Date :29/03/2012
(87) International Publication No :WO 2012/130970
(61) Patent of Addition to Application Number :NA
Filing Date :NA
(62) Divisional to Application Number :NA
Filing Date :NA

(71)**Name of Applicant :**
1)NESTEC S.A.
Address of Applicant :Avenue Nestl 55 CH 1800 Vevey Switzerland
(72)**Name of Inventor :**
1)PRIDMORE Raymond David
2)FOATA Francis
3)DELLEY Mich¨le
4)JANKOVIC Ivana

(57) Abstract :
The present invention generally relates to the field of probiotic bacteria. In particular the present invention relates to natural derivatives of the CNCM I 1225 that are deficient in D lactic acid production.

No. of Pages : 39 No. of Claims : 15

(12) PATENT APPLICATION PUBLICATION
(19) INDIA
(22) Date of filing of Application :01/10/2013
(21) Application No.8556/DELNP/2013 A
(43) Publication Date : 19/12/2014

(54) Title of the invention : HOT STAMP MOLDED HIGH STRENGTH COMPONENT HAVING EXCELLENT CORROSION RESISTANCE AFTER COATING AND METHOD FOR MANUFACTURING SAME

(51) International classification :C23C2/12,C21D9/46,C22C38/00
(31) Priority Document No :2011081995
(32) Priority Date :01/04/2011
(33) Name of priority country :Japan
(86) International Application No :PCT/JP2012/058655
Filing Date :30/03/2012
(87) International Publication No :WO 2012/137687
(61) Patent of Addition to Application Number :NA
Filing Date :NA
(62) Divisional to Application Number :NA
Filing Date :NA

(71)**Name of Applicant :**
1)NIPPON STEEL & SUMITOMO METAL CORPORATION
Address of Applicant :6 1 Marunouchi 2 chome Chiyoda ku Tokyo 1008071 Japan
(72)**Name of Inventor :**
1)MAKI Jun
2)KUSUMI Kazuhisa
3)ABE Masayuki
4)KUROSAKI Masao

(57) Abstract :
Provided is a hot stamp molded high strength component having excellent corrosion resistance after coating in which the propagation of cracks generated in a plating layer during hot stamp machining is inhibited when an Al plated steel plate has undergone hot stamp machining without the addition of special component elements for inhibiting the generation of cracks in the Al plating layer. This hot stamp molded high strength component having excellent corrosion resistance after coating has an alloy plating layer that includes an Al Fe intermetallic compound phase on the surface of the steel plate the hot stamp molded high strength component characterized in that the alloy plating layer is formed from a plurality of intermetallic compound phases the average section length of crystal grains of the phases containing 40 to 65 mass% of Al in the plurality of intermetallic compound phases is 3 to 20 μm the average value of the thickness of the Al Fe alloy plating layer is 10 to 50 μm and the ratio of the standard deviation of the thicknesses of the Al Fe alloy plating layer in relation to the average value of the thicknesses satisfies the following formula: 0 < standard deviation of the thicknesses/average value of the thicknesses < 0.15.

No. of Pages : 56 No. of Claims : 11

(12) PATENT APPLICATION PUBLICATION
(19) INDIA
(22) Date of filing of Application :01/10/2013
(21) Application No.8557/DELNP/2013 A
(43) Publication Date : 19/12/2014

(54) Title of the invention : POWER ASSISTED SUPERCHARGER AND METHOD FOR CONTROLLING SAME

(51) International classification :F02B37/10,F02B37/12
(31) Priority Document No :2011086204
(32) Priority Date :08/04/2011
(33) Name of priority country :Japan
(86) International Application No :PCT/JP2012/059512
Filing Date :06/04/2012
(87) International Publication No :WO 2012/137921
(61) Patent of Addition to Application Number :NA
Filing Date :NA
(62) Divisional to Application Number :NA
Filing Date :NA

(71)**Name of Applicant :**
1)IHI Corporation
Address of Applicant :1 1 Toyosu 3 chome Koto ku Tokyo 1358710 Japan
(72)**Name of Inventor :**
1)MIZUNO Yuichiro
2)SHINAGAWA Kazuhiko

(57) Abstract :
This power assisted supercharger (10) comprises: a turbo supercharger (12) for rotatingly driving a turbine (12a) using exhaust gas (7) of an engine (40) rotatingly driving a compressor (12b) using the turbine compressing intake air (5) and feeding the intake air to the engine; an electric motor (14) for supplying rotational force to the turbo supercharger the electric motor being connected to a rotary shaft (12c) connecting the turbine and the compressor to each other; and a motor control device (20) for controlling in open loop fashion on the basis of the engine accelerator position (A) and the rotation frequency of the engine (NE) a drive current (I) of the electric motor necessary for assist operation of the turbo supercharger. This power assisted supercharger makes it possible to reduce turbo lag as a standalone unit has a small power consumption even in a region at which the engine rotation speed is high makes it possible to prevent any malfunction or unnecessary power consumption makes it possible to simplify the control system and is associated with a small installation space or mass.

No. of Pages : 34 No. of Claims : 8

(12) PATENT APPLICATION PUBLICATION
(19) INDIA
(22) Date of filing of Application :26/09/2013
(21) Application No.8396/DELNP/2013 A
(43) Publication Date : 19/12/2014

(54) Title of the invention : DAMPER TUBE REINFORCEMENT SLEEVE

(51) International classification :F16F9/32,F16F9/34,B60G15/06
(31) Priority Document No :13/167056
(32) Priority Date :23/06/2011
(33) Name of priority country :U.S.A.
(86) International Application No :PCT/US2012/043508
Filing Date :21/06/2012
(87) International Publication No :WO 2012/177849
(61) Patent of Addition to Application Number :NA
Filing Date :NA
(62) Divisional to Application Number :NA
Filing Date :NA

(71)**Name of Applicant :**
1)TENNECO AUTOMOTIVE OPERATING COMPANY INC.
Address of Applicant :500 North Field Drive Lake Forest IL 60045 U.S.A.
(72)**Name of Inventor :**
1)KEIL Daniel T.
2)SCHALLER Ben
3)CONRAD Christopher
4)SUBRAMANIAM Laxman
5)NOWAK Michal

(57) Abstract :
A strut assembly includes an upper mount assembly a shock absorber and a knuckle. The upper mount assembly is attached to a piston rod which is a part of the shock absorber. The knuckle is attached to an outer tube of the shock absorber which can be a reserve tube of a dual tube shock absorber or a pressure tube of a single tube shock absorber. A reinforcement member increases the strength of the outer tube in the area that interfaces with the knuckle and the area that is directly above the knuckle.

No. of Pages : 28 No. of Claims : 20

(12) PATENT APPLICATION PUBLICATION
(19) INDIA
(22) Date of filing of Application :26/09/2013
(21) Application No.8397/DELNP/2013 A
(43) Publication Date : 19/12/2014

(54) Title of the invention : AMORPHOUS POLYCARBONATE FILMS FOR CAPACITORS METHODS OF MANUFACTURE AND ARTICLES MANUFACTURED THEREFROM

(51) International classification :C08G64/04,C08J5/18,H01G4/18
(31) Priority Document No :61/485305
(32) Priority Date :12/05/2011
(33) Name of priority country :U.S.A.
(86) International Application No :PCT/US2012/037665
Filing Date :11/05/2012
(87) International Publication No :WO 2012/155116
(61) Patent of Addition to Application Number :NA
Filing Date :NA
(62) Divisional to Application Number :NA
Filing Date :NA

(71)**Name of Applicant :**
1)SABIC INNOVATIVE PLASTICS IP B.V.
Address of Applicant :Plasticslaan 1 NL 4612 PX Bergen op Zoom Netherlands
(72)**Name of Inventor :**
1)SILVI Norberto
2)CHEN Qin
3)BALCH Gary Stephen
4)MAHOOD James Alan

(57) Abstract :
A uniaxially stretched extruded film comprising a polycarbonate wherein the extruded film has at least one wrinkle free region having a first surface and a second surface the at least one extruded wrinkle free region comprising: an extruded thickness of more than 0 and less than 7 micrometer and a variation of the thickness of the film of +/ 10% of the thickness of the film and a surface roughness average that is less than +/ 3% of the average thickness of the film as measured by optical profilometery; and further wherein the film has a dielectric constant at 1 kHz and room temperature of at least 2.7; a dissipation factor at 1 kHz and room temperature of 1 % or less; and a breakdown strength of at least 300 Volt/micrometer.

No. of Pages : 48 No. of Claims : 24

(12) PATENT APPLICATION PUBLICATION
(19) INDIA
(22) Date of filing of Application :26/09/2013
(21) Application No.8398/DELNP/2013 A
(43) Publication Date : 19/12/2014

(54) Title of the invention : VESSEL

(51) International classification :E02F7/02,E02F5/00
(31) Priority Document No :2006502
(32) Priority Date :31/03/2011
(33) Name of priority country :Netherlands
(86) International Application No :PCT/NL2012/050191
Filing Date :26/03/2012
(87) International Publication No :WO 2012/134276
(61) Patent of Addition to Application Number :NA
Filing Date :NA
(62) Divisional to Application Number :NA
Filing Date :NA

(71)**Name of Applicant :**
1)IHC Holland IE B.V.
Address of Applicant :Molendijk 94 NL 3361 EP Sliedrecht Netherlands
(72)**Name of Inventor :**
1)DE JAGER Arie
2)KUYPERS Ronny Hubertus Anna
3)KLOP Hendrik Adam
4)VAN OPSTAL Timothy Alexander

(57) Abstract :
The invention relates to a vessel (1) comprising a hull (2) a deck (3) and at least one superstructure (4) fixedly mounted to the deck (2) of the vessel (1). The vessel (1) comprises equipment (10) attached to the deck (3) of the vessel (1). The equipment (10) comprises at least one equipment part (11) that can be positioned in an onboard position and an outboard position wherein the equipment part (11) at least partially protrudes from the hull (2) of the vessel (1). The vessel (1) comprises a frame (20) for supporting the at least one equipment part (11). The frame (20) is connected to the superstructure (4) via a hinge construction (30) allowing the at least one equipment part (11) to be moved from the onboard to the outboard position and vice versa while being supported by the frame (20).

No. of Pages : 16 No. of Claims : 10

(12) PATENT APPLICATION PUBLICATION
(19) INDIA
(22) Date of filing of Application :26/09/2013
(21) Application No.8399/DELNP/2013 A
(43) Publication Date : 19/12/2014

(54) Title of the invention : PROPPANT PARTICLES FORMED FROM SLURRY DROPLETS AND METHOD OF USE

(51) International classification :C04B35/10,C09K8/80,C09K8/60
(31) Priority Document No :13/045980
(32) Priority Date :11/03/2011
(33) Name of priority country :U.S.A.
(86) International Application No :PCT/US2012/028308
Filing Date :08/03/2012
(87) International Publication No :WO 2012/125412
(61) Patent of Addition to Application Number :NA
Filing Date :NA
(62) Divisional to Application Number :NA
Filing Date :NA

(71)**Name of Applicant :**
1)CARBO CERAMICS INC.
Address of Applicant :575 North Dairy Ashford Suite 300 Houston Texas 77079 U.S.A.
(72)**Name of Inventor :**
1)ELDRED Benjamin T.
2)WILSON Brett A.
3)GARDINIER Clayton F.
4)DUENCKEL Robert J.

(57) Abstract :
Proppant material for hydraulic fracturing is provided. The particles of the proppant are formed by drip casting. A slurry of finely divided ceramic particles is flowed through nozzles and formed into droplets under the influence of vibration. Uniform sized smooth surface spherical green particles are formed. The green particles are dried and sintered to form the proppant. The proppant is used in the process of hydraulic fracturing of wells.

No. of Pages : 27 No. of Claims : 41

(12) PATENT APPLICATION PUBLICATION
(19) INDIA
(22) Date of filing of Application :01/10/2013
(21) Application No.8560/DELNP/2013 A
(43) Publication Date : 19/12/2014

(54) Title of the invention : A METHOD OF PEPTIDE HYDROLYSIS PEPTIDASE THE COMPOSITION FOR USE AS A BACTERIOSTATIC AND BACTERICIDAL AGENT A KIT AND THE USES OF THE ACTIVE FORM OF LYTM FROM S. AUREUS OR DERIVATIVES THEREOF

(51) International classification :A61K38/48,C12N9/52
(31) Priority Document No :P.394619
(32) Priority Date :19/04/2011
(33) Name of priority country :Poland
(86) International Application No :PCT/PL2012/000026
Filing Date :18/04/2012
(87) International Publication No :WO 2012/144912
(61) Patent of Addition to Application Number :NA
Filing Date :NA
(62) Divisional to Application Number :NA
Filing Date :NA

(71)**Name of Applicant :**
1)MIEDZYNARODOWY INSTYTUT BIOLOGII MOLEKULARNEJ I KOMORKOWEJ
Address of Applicant :ul. Ks. Trojdena 4 02 109 Warszawa Poland
(72)**Name of Inventor :**
1)SABALA Izabela
2)BOCHTLER Matthias

(57) Abstract :
The invention relates to new method of peptide hydrolysis in particular of the cell walls of Gram positive bacteria wherein the active form of LytM or derivative thereof is contacted with a peptide substrate preferably with the cell walls of Gram positive bacteria in an aqueous environment of conductivity lower than 10 mS/cm. The invention also relates to composition comprising active form of LytM or derivative thereof and new uses of active form of LytM or derivative thereof.

No. of Pages : 38 No. of Claims : 34

(12) PATENT APPLICATION PUBLICATION
(19) INDIA
(22) Date of filing of Application :17/09/2013
(21) Application No.8135/DELNP/2013 A
(43) Publication Date : 19/12/2014

(54) Title of the invention : AGENT FOR IMPROVING OR MAINTAINING QOL

(51) International classification :A61K35/74,A23L1/30,A23L2/52
(31) Priority Document No :2011080814
(32) Priority Date :31/03/2011
(33) Name of priority country :Japan
(86) International Application No :PCT/JP2012/058145
Filing Date :28/03/2012
(87) International Publication No :WO 2012/133533
(61) Patent of Addition to Application Number :NA
Filing Date :NA
(62) Divisional to Application Number :NA
Filing Date :NA

(71)**Name of Applicant :**
1)OTSUKA PHARMACEUTICAL CO. LTD.
Address of Applicant :9 Kanda Tsukasamachi 2 chome Chiyoda ku Tokyo 1018535 Japan
2)TOKYO METROPOLITAN GERIATRIC HOSPITAL AND INSTITUTE OF GERONTOLOGY
(72)**Name of Inventor :**
1)TSUBOUCHI Mina
2)SAITO Takao
3)TOBA Masamichi
4)KOUDA Noriyuki
5)SHINKAI Shoji

(57) Abstract :
LactobacillusThe purpose of the present invention is to provide an agent for improving or maintaining QOL an agent for improving or maintaining physical health an agent for improving or maintaining vitality an agent for recovering from fatigue or relieving fatigue and an anti fatigue agent. An agent for improving or maintaining QOL an agent for improving or maintaining physical health an agent for improving or maintaining vitality an agent for recovering from fatigue or relieving fatigue and an anti fatigue agent each of which comprises ONRICb0240 (FERM BP 10065).

No. of Pages : 35 No. of Claims : 4

(12) PATENT APPLICATION PUBLICATION
(19) INDIA
(22) Date of filing of Application :03/10/2013
(21) Application No.8567/DELNP/2013 A
(43) Publication Date : 19/12/2014

(54) Title of the invention : METHOD FOR THE PRODUCTION OF PROTEIN COMPLEXES AND VACCINE COMPOSITIONS COMPRISING THE SAME

(51) International classification :A61K39/385,A61K38/16,A61K39/00
(31) Priority Document No :1104897.2
(32) Priority Date :23/03/2011
(33) Name of priority country :U.K.
(86) International Application No :PCT/GB2012/050650
Filing Date :23/03/2012
(87) International Publication No :WO 2012/127248
(61) Patent of Addition to Application Number :NA
Filing Date :NA
(62) Divisional to Application Number :NA
Filing Date :NA

(71)**Name of Applicant :**
1)IMMUNOBIOLOGY LIMITED
Address of Applicant :Babraham Research Campus Babraham Cambridge Cambridgeshire CB22 3AT U.K.
(72)**Name of Inventor :**
1)COLACO Camilo
2)McENTEE Ian

(57) Abstract :
The present invention relates to methods for the production of heat shock protein complexes for use in vaccine compositions. In particular there is provided a method for increasing the level and immunogenicity of heat shock protein complexes produced in cells by subjecting the cells to specific stress inducing stimuli. The invention further extends to the use of heat shock protein complexes produced according to the methods of the invention in the preparation of vaccine compositions for the prevention and treatment of infectious diseases and cancerous conditions.

No. of Pages : 53 No. of Claims : 32

(12) PATENT APPLICATION PUBLICATION
(19) INDIA
(22) Date of filing of Application :03/10/2013
(21) Application No.8568/DELNP/2013 A
(43) Publication Date : 19/12/2014

(54) Title of the invention : METHOD FOR PRODUCING TRAYS FOR BRACKETS

(51) International classification :A61C7/14,A61C7/00
(31) Priority Document No :PCT/EP2011/055258
(32) Priority Date :05/04/2011
(33) Name of priority country :EPO
(86) International Application No :PCT/EP2012/056349
Filing Date :05/04/2012
(87) International Publication No :WO 2012/136803
(61) Patent of Addition to Application Number :NA
Filing Date :NA
(62) Divisional to Application Number :NA
Filing Date :NA

(71)**Name of Applicant :**
1)JO Yong min
Address of Applicant :Sonnenstrasse 90 40227 D¼sselddorf Germany
2)URBAN Andreas
(72)**Name of Inventor :**
1)JO Yong min
2)URBAN Andreas

(57) Abstract :
The invention relates to a method for producing individual trays for positioning brackets. However the known aids and methods all have disadvantages. Thus the aim of the invention is to specify a method by means of which a tray for placing brackets can be created in a simple manner which tray allows brackets to be placed quickly and with high accuracy. For this purpose keeping a large working area free is advantageous. Easy detachment of the trays from glued on brackets should be ensured and the brackets should nevertheless be adequately retained in the tray. Said aim is achieved by a method for producing individual trays (13) for positioning brackets comprising the following steps: a) producing a real model (5) wherein the at least one model is a reproduction of at least sections of at least two tooth crowns of teeth in a jaw and contains bracket reproductions or brackets associated with the reproductions of the tooth crowns; b) producing at least two trays (13) by producing at least one impression of the real model (5) characterized in that the trays (13) each comprise an impression of only at least one tooth crown part (6) of the at least two tooth crowns and only at least one bracket part (8) of the at least two bracket reproductions or brackets wherein the at least one bracket part (8) viewed from the occlusal surface of the associated tooth crown extends vertically to at most the end of the wire guide (9) and/or to the end of the first undercut of the bracket and/or bracket reproduction which is arranged after the upper wing (10) in the view from the occlusal surface.

No. of Pages : 32 No. of Claims : 15

(12) PATENT APPLICATION PUBLICATION
(19) INDIA
(22) Date of filing of Application :03/10/2013
(21) Application No.8569/DELNP/2013 A
(43) Publication Date : 19/12/2014

(54) Title of the invention : USE OF RADIOFREQUENCY WAVE ABSORBING MARKERS FOR THE AUTHENTICATION OF SECURITY DOCUMENTS

(51) International classification :C09D7/12,B41M3/14,B42D15/00
(31) Priority Document No :11382093.0
(32) Priority Date :01/04/2011
(33) Name of priority country :EPO
(86) International Application No :PCT/EP2012/055806
Filing Date :30/03/2012
(87) International Publication No :WO 2012/131045
(61) Patent of Addition to Application Number :NA
Filing Date :NA
(62) Divisional to Application Number :NA
Filing Date :NA

(71)**Name of Applicant :**
1)F BRICA NACIONAL DE MONEDA Y TIMBRE REAL CASA DE LA MONEDA
Address of Applicant :C/ Jorge Juan 106 E 28009 Madrid Spain
2)CONSEJO SUPERIOR DE INVESTIGACIONES CIENT FICAS C.S.I.C.
(72)**Name of Inventor :**
1)ROMERO FANEGO Juan Jos
2)GARC A JUEZ Vicente
3)FERN NDEZ LOZANO Jos Francisco
4)GAMO ARANDA Javier
5)RODR GUEZ BARBERO Miguel ngel

(57) Abstract :
The present invention relates to the use of non deactivatable security compositions comprising the combination of at least two types of particles of oxide materials where said particles have a different size and/or morphology and where the inorganic oxide materials have at least one transition metal or one lanthanide element and radiofrequency wave absorption properties. The invention also relates to security articles documents or elements incorporating these compositions as well as to a method and to a system for detection thereof.

No. of Pages : 37 No. of Claims : 15

(12) PATENT APPLICATION PUBLICATION
(19) INDIA
(22) Date of filing of Application :30/09/2013
(21) Application No.8475/DELNP/2013 A
(43) Publication Date : 19/12/2014

(54) Title of the invention : SURGICAL DRILL INSTRUMENT WITH MOTOR AND LOCKING MECHANISM TO RECEIVE AN ATTACHMENT AND A CUTTING BURR

(51) International classification :A61B17/16
(31) Priority Document No :NA
(32) Priority Date :NA
(33) Name of priority country :NA
(86) International Application No :PCT/US2011/031512
Filing Date :07/04/2011
(87) International Publication No :WO 2012/138338
(61) Patent of Addition to Application Number :NA
Filing Date :NA
(62) Divisional to Application Number :NA
Filing Date :NA

(71)**Name of Applicant :**
1)SYNTHES USA LLC
Address of Applicant :1302 Wrights Lane East West Chester Pennsylvania 19380 U.S.A.
2)SYNTHES GMBH
(72)**Name of Inventor :**
1)DEL RIO Eddy H.
2)ENCK Duane Jeffrey

(57) Abstract :
A surgical apparatus having a locking mechanism that receives a cutting burr and that may include a loading and running position. The locking mechanism may include a motor driven spindle that carries a locking pawl and a detent pawl that lock the cutting burr in place an prevent the cutting burr from inadvertently falling out of the surgical drill instrument when in its load position. A diamond shaped portion of the cutting burr may be formed in a six sided diamond configuration and a perpendicular back end surface. The end of the cutting burr may include another diamond shaped portion formed in a six sided diamond shape surface that mates with a complementary surface formed in the receiving end of the spindle of the motor/locking mechanism. In an aspect the attachment of the cutting burr is such that the cutting burr has substantially zero axial movement and runs true in the running condition.

No. of Pages : 30 No. of Claims : 28

(12) PATENT APPLICATION PUBLICATION
(19) INDIA
(22) Date of filing of Application :30/09/2013
(21) Application No.8476/DELNP/2013 A
(43) Publication Date : 19/12/2014

(54) Title of the invention : HIGH PRESSURE RESISTANT SCREW CONNECTION FOR PIPELINES OR HOSE LINES HAVING A TAPERED THREAD

(51) International classification	:F16L19/028,F16L19/06,F16L19/065
(31) Priority Document No	:10 2011 015 895.2
(32) Priority Date	:01/04/2011
(33) Name of priority country	:Germany
(86) International Application No	:PCT/EP2012/055817
Filing Date	:30/03/2012
(87) International Publication No	:WO 2012/131049
(61) Patent of Addition to Application Number	:NA
Filing Date	:NA
(62) Divisional to Application Number	:NA
Filing Date	:NA

(71)**Name of Applicant :**
1)PARKER HANNIFIN MANUFACTURING GERMANY GMBH & CO. KG
Address of Applicant :Am Metallwerk 9 33659 Bielefeld Germany
(72)**Name of Inventor :**
1)SCHIPPERS Carsten
2)MLLER Thomas
3)NEISKE Oliver
4)UDH–FER Andreas

(57) Abstract :
A connecting device for pipelines or hose lines with a threaded body and with a pipe like end piece which can be inserted into a receptacle formed on the threaded body and which can be fitted therein by means of a swivel nut screwed onto the threaded body wherein the receptacle of the threaded body has the shape of a widening cone and the circumferential surface of the end piece that engages in the receptacle has a conical design is characterized in that the circumferential surface (12) of the threaded body (10) that bears the external thread (30) has in the direction of the front end of said surface an inclined profile directed opposite to the cone of the receptacle (11) and the swivel nut (17) has with its surface (18) bearing the internal thread (31) a profile complementary thereto and the external thread (30) and internal thread (31) are designed as tapered threads in such a way that a radial force emanating from the tapered thread with the swivel nut (17) screwed on is directed opposite to the radial force exerted with the connecting device mounted by the conical end piece (13) onto the receiving cone (11) formed in the threaded body (10).

No. of Pages : 24 No. of Claims : 12

(12) PATENT APPLICATION PUBLICATION
(19) INDIA
(22) Date of filing of Application :30/09/2013
(21) Application No.8477/DELNP/2013 A
(43) Publication Date : 19/12/2014

(54) Title of the invention : TISSUE REPAIR DEVICES OF RAPID THERAPEUTIC ABSORBENCY

(51) International classification :A61L27/14,A61L27/56,A61L31/04
(31) Priority Document No :13/075531
(32) Priority Date :30/03/2011
(33) Name of priority country :U.S.A.
(86) International Application No :PCT/US2012/031397
Filing Date :30/03/2012
(87) International Publication No :WO 2012/135593
(61) Patent of Addition to Application Number :NA
Filing Date :NA
(62) Divisional to Application Number :NA
Filing Date :NA

(71)**Name of Applicant :**
1)ETHICON INC.
Address of Applicant :P.o. Box 151 U.S. Route 22 Somerville NJ 08876 U.S.A.
(72)**Name of Inventor :**
1)PRIEWE Joerg

(57) Abstract :
Novel implantable tissue repair medical devices are disclosed. The devices have a central fabric member having anti adhesion films on both opposed sides. The films have pores and are arranged such that the pores on the opposed films are offset. The devices are useful in hernia repair procedures.

No. of Pages : 24 No. of Claims : 25

(12) PATENT APPLICATION PUBLICATION
(19) INDIA
(22) Date of filing of Application :30/09/2013
(21) Application No.8478/DELNP/2013 A
(43) Publication Date : 19/12/2014

(54) Title of the invention : STEREOSCOPIC VIDEO IMAGING APPARATUS CONVERGENCE DISTANCE ADJUSTMENT METHOD AND PROGRAM FOR CONVERGENCE DISTANCE ADJUSTMENT METHOD

(51) International classification	:G03B35/10,G02B7/02,H04N13/02
(31) Priority Document No	:2011085564
(32) Priority Date	:07/04/2011
(33) Name of priority country	:Japan
(86) International Application No	:PCT/JP2012/001815
Filing Date	:15/03/2012
(87) International Publication No	:WO 2012/137423
(61) Patent of Addition to Application Number	:NA
Filing Date	:NA
(62) Divisional to Application Number	:NA
Filing Date	:NA

(71)**Name of Applicant :**
1)SONY CORPORATION
Address of Applicant :1 7 1 Konan Minato ku Tokyo 1080075 Japan
(72)**Name of Inventor :**
1)KAWASE Masamiki
2)HOSHINO Hiromi

(57) Abstract :
To preferably set a focus distance and a convergence distance. 5 [Solving Means] A three-dimensional image pickup apparatus 100 is provided with a left lens optical system 121L and a right lens optical system 121R including a pair of right and left image pickup lenses disposed at a predetermined inter axial distance. 10 Further, a focus ring that adjusts the focus of the left lens optical system 121L and the right lens optical system 121R and a control circuit that adjusts a convergence distance from a convergence point at which optical axes of the pair of right and left image 15 pickup lenses are intersected to the image pickup lenses. The control circuit adds the offset distance to the focus distance and adjusts the convergence distance with the offset distance set as a distance from a focus point to a convergence point to be set. 20

No. of Pages : 56 No. of Claims : 8

(12) PATENT APPLICATION PUBLICATION
(19) INDIA
(22) Date of filing of Application :30/09/2013
(21) Application No.8502/DELNP/2013 A
(43) Publication Date : 19/12/2014

(54) Title of the invention : HYDROGENATION OF KETONES HAVING AT LEAST A CARBON CARBON DOUBLE BOND IN THE D POSITION

(51) International classification :C07C45/62
(31) Priority Document No :11169784.3
(32) Priority Date :14/06/2011
(33) Name of priority country :EPO
(86) International Application No :PCT/EP2012/061226
Filing Date :13/06/2012
(87) International Publication No :WO 2012/171969
(61) Patent of Addition to Application Number :NA
Filing Date :NA
(62) Divisional to Application Number :NA
Filing Date :NA

(71)**Name of Applicant :**
1)DSM IP ASSETS B.V.
Address of Applicant :Het Overloon 1 NL 6411 Te Heerlen Netherlands
(72)**Name of Inventor :**
1)MUELLER Marc Andr
2)PFALTZ Andreas
3)MEDLOCK Jonathan

(57) Abstract :
The present invention relates in a first aspect to a process for hydrogenation of ketones having at least a carbon carbon double bond in the y 8 position to the keto group by hydrogen in the presence of at least one chiral iridium complex of formula (I) where R1 represents a group of formula (II) or (III) or (IV). It has been shown that this process leads to a strong increase in preferential formation of a single isomer. The process is particu larly su itable for the hydrogenation of y 8 unsaturated ketones which can be used as flavours and fragrances or for the preparation of vitamin E and its derivatives or of flavours and fragrances.

No. of Pages : 32 No. of Claims : 17

(12) PATENT APPLICATION PUBLICATION
(19) INDIA
(22) Date of filing of Application :30/09/2013
(21) Application No.8503/DELNP/2013 A
(43) Publication Date : 19/12/2014

(54) Title of the invention : CHARGING PLUG WITH CONTACT FREE SWITCH DEVICE

(51) International classification :H01R107/00,H01R13/52,H01R13/703
(31) Priority Document No :10 2011 002 024.1
(32) Priority Date :13/04/2011
(33) Name of priority country :Germany
(86) International Application No :PCT/EP2012/056372
Filing Date :05/04/2012
(87) International Publication No :WO 2012/139982
(61) Patent of Addition to Application Number :NA
Filing Date :NA
(62) Divisional to Application Number :NA
Filing Date :NA

(71)**Name of Applicant :**
1)TYCO ELECTRONICS AMP GMBH
Address of Applicant :Amperestrasse 12 14 64625 Bensheim Germany
(72)**Name of Inventor :**
1)BOECK Werner
2)BERGNER Bert
3)ONDREJ Dusan
4)ZABECK Sebastian
5)BUCHMANN Ulrich

(57) Abstract :
The invention relates to a charging plug (1) for connection to a charging socket of a device which is intended to be charged for example a motor vehicle which is at least partially driven by electrical energy or a device which provides charging energy. In order to prevent the charging plug from prematurely becoming defective as a result of corrosion or electromigration there is provision according to the invention for a switching device (27) of the charging plug (1) to be arranged partially inside and partially outside an enclosed conduction chamber (18).

No. of Pages : 19 No. of Claims : 14

(12) PATENT APPLICATION PUBLICATION
(19) INDIA
(22) Date of filing of Application :30/09/2013
(21) Application No.8504/DELNP/2013 A
(43) Publication Date : 19/12/2014

(54) Title of the invention : CONNECTOR ELEMENT HAVING SECOND CONTACT SECURING MEANS

(51) International classification :H01R13/422,H01R13/436,H01R13/50
(31) Priority Document No :102011002135.3
(32) Priority Date :18/04/2011
(33) Name of priority country :Germany
(86) International Application No :PCT/EP2012/056441
Filing Date :10/04/2012
(87) International Publication No :WO 2012/143259
(61) Patent of Addition to Application Number :NA
Filing Date :NA
(62) Divisional to Application Number :NA
Filing Date :NA

(71)**Name of Applicant :**
1)TYCO ELECTRONICS AMP GMBH
Address of Applicant :Amperestrasse 12 14 64625 Bensheim Germany
(72)**Name of Inventor :**
1)MUMPER Guenther
2)ROTH Konrad Helmut

(57) Abstract :
The present invention relates to an electrical connector element (1) having at least one contact receiving member (7) for an electrical contact element (100) which can be inserted in an insertion direction (E) as far as its end position (F) into the at least one contact receiving member (7) having a locking member (9) by means of which the contact element (100) in its locking position (L) can be secured in the end position (F) against being removed from the at least one contact receiving member (7) counter to the insertion direction (E) and having a securing member (13) which retains the locking member (9) in the locking position (L) in its securing position (B). In order to better secure the contact elements (100) against being removed from the contact receiving members (7) there is provision according to the invention for the securing member (13) in the securing position (B) to at least partially protrude into the at least one contact receiving member (7) and consequently for the contact element (100) to be able to be additionally secured against being removed from the at least one contact receiving member (7) counter to the insertion direction (E).

No. of Pages : 18 No. of Claims : 9

(12) PATENT APPLICATION PUBLICATION
(19) INDIA
(22) Date of filing of Application :30/09/2013
(21) Application No.8505/DELNP/2013 A
(43) Publication Date : 19/12/2014

(54) Title of the invention : CONDENSER/ACCUMULATOR AND SYSTEMS AND OPERATION METHODS

(51) International classification :F25B39/04,F25B9/00,F28B1/02
(31) Priority Document No :NA
(32) Priority Date :NA
(33) Name of priority country :NA
(86) International Application No:PCT/IB2011/001465
Filing Date :21/04/2011
(87) International Publication No :WO 2012/143751
(61) Patent of Addition to Application Number :NA
Filing Date :NA
(62) Divisional to Application Number :NA
Filing Date :NA

(71)**Name of Applicant :**
1)CARRIER CORPORATION
Address of Applicant :One Carrier Place Farmington Connecticut 06034 U.S.A.
(72)**Name of Inventor :**
1)GRABON Michel
2)TERRAZ Gregory

(57) Abstract :
A condenser/accumulator (60) has a shell (62). A coolant flowpath extends from a coolant (144) inlet to a coolant outlet (1 46). An upper tube bundle (68) is within the shell a first branch of the coolant flowpath passing through tubes of the upper tube bundle. A lower tube bundle (70) is within the shell a second branch of the coolant flowpath passing through tubes of the lower tube bundle. A refrigerant flowpath extends from a refrigerant inlet (64) to a refrigerant outlet (66) and is in heat transfer relation with the coolant flowpath. There is a vertical gap (76) between the upper tube bundle and the lower tube bundle and comprising at least 50% of a free volume of a refrigerant space within the shell.

No. of Pages : 26 No. of Claims : 20

(12) PATENT APPLICATION PUBLICATION
(19) INDIA
(22) Date of filing of Application :03/10/2013

(21) Application No.8570/DELNP/2013 A
(43) Publication Date : 19/12/2014

(54) Title of the invention : RELAY NODE DONOR RADIO BASE STATION AND METHODS THEREIN

(51) International classification	:H04B7/155,H04W72/12,H04W16/24
(31) Priority Document No	:61/452256
(32) Priority Date	:14/03/2011
(33) Name of priority country	:U.S.A.
(86) International Application No	:PCT/SE2011/050622
Filing Date	:17/05/2011
(87) International Publication No	:WO 2012/125095
(61) Patent of Addition to Application Number	:NA
Filing Date	:NA
(62) Divisional to Application Number	:NA
Filing Date	:NA

(71)**Name of Applicant :**
1)TELEFONAKTIEBOLAGET L M ERICSSON (PUBL)
Address of Applicant :S 164 83 Stockholm Sweden
(72)**Name of Inventor :**
1)MILDH Gunnar
2)–STERGAARD Jessica
3)GUNNARSSON Fredrik

(57) Abstract :
Embodiments herein relate to a method in a donor radio base station (12) for configuring information associated to radio bearers in a radio communications network. The donor radio base station (12) controls a relay node (10) and which relay node (10) serves a cell (11) and controls a number of first radio bearers (R1) over a first radio interface between the relay node (10) and at least one user equipment (17) served in the cell (11). The donor radio base station (12) further controls a number of second radio bearers (R2) over a second radio interface between the donor radio base station (12) and the relay node (10) and which donor radio base station (12) and relay node (10) are comprised in the radio communications network. The donor radio base station (12) receives characteristic information indicating a characteristic of the relay node (10). Additionally the donor radio base station (12) configures bearer information associated with at least one of the first radio bearers (R1) and/or the second radio bearers (R2) based on the indicated characteristic in the received characteristic information. The configured bearer information is to be used in the radio communications network during operation.

No. of Pages : 43 No. of Claims : 30

(12) PATENT APPLICATION PUBLICATION
(19) INDIA
(22) Date of filing of Application :03/10/2013
(21) Application No.8571/DELNP/2013 A
(43) Publication Date : 19/12/2014

(54) Title of the invention : MEMBER COATED WITH HARD FILM PROCESS FOR PRODUCING SAME AND BIT EXCHANGEABLE ROTARY TOOL EQUIPPED THEREWITH

(51) International classification :B23B27/14,C23C16/36
(31) Priority Document No :2011081223
(32) Priority Date :31/03/2011
(33) Name of priority country :Japan
(86) International Application No :PCT/JP2012/058015
Filing Date :27/03/2012
(87) International Publication No :WO 2012/133461
(61) Patent of Addition to Application Number :NA
Filing Date :NA
(62) Divisional to Application Number :NA
Filing Date :NA

(71)**Name of Applicant :**
1)Hitachi Tool Engineering Ltd.
Address of Applicant :2 1 Shibaura 1 chome Minato ku Tokyo 1050023 Japan
(72)**Name of Inventor :**
1)FUKUNAGA Yuuzoh
2)KUBOTA Kazuyuki

(57) Abstract :
A hard film coated member which comprises a base constituted of a superhard alloy or a high speed steel and a titanium carbonitride layer formed on the base by chemical vapor deposition the titanium carbonitride layer having a columnar crystal structure and comprising first to third layers in this order from the base side (the carbon concentration of the second layer is lower than the carbon concentration of the first layer and the carbon concentration of the third layer is lower than the carbon concentration of the second layer); and a bit exchangeable rotary tool which includes the member. The first layer is formed using feed gases which comprise TiCl gas N gas a C hydrocarbon gas and H gas. The second layer is formed using feed gases which comprise TiCl gas N gas an organic cyanide gas a C hydrocarbon gas and H gas. The third layer is formed using feed gases which comprise TiCl gas N gas an organic cyanide gas and H gas and in which the content of the organic cyanide gas is less than that for the second layer.

No. of Pages : 97 No. of Claims : 18

(12) PATENT APPLICATION PUBLICATION
(19) INDIA
(22) Date of filing of Application :03/10/2013
(21) Application No.8580/DELNP/2013 A
(43) Publication Date : 19/12/2014

(54) Title of the invention : METHOD AND APPARATUS FOR GENERATION OF VAPOUR FOR USE IN AN INDUSTRIAL PROCESS

(51) International classification :F22B1/00,F01K7/22,F22B7/00
(31) Priority Document No :1104975.6
(32) Priority Date :24/03/2011
(33) Name of priority country :U.K.
(86) International Application No :PCT/GB2012/050663
Filing Date :26/03/2012
(87) International Publication No :WO 2012/127250
(61) Patent of Addition to Application Number :NA
Filing Date :NA
(62) Divisional to Application Number :NA
Filing Date :NA

(71)**Name of Applicant :**
1)DOW CORNING CORPORATION
Address of Applicant :PO Box 994 2200 West Salzburg Road Midland Michigan 48686 0994 U.S.A.
(72)**Name of Inventor :**
1)BENT David
2)DAVIES Keith

(57) Abstract :
A method of generating steam for use in an industrial process is disclosed. The industrial process may for example be power generation or desalination. The method comprises: (a) pressurising a working fluid liquid comprising water to a first pressure; (b) heating the working fluid liquid to a temperature substantially equal to the saturation temperature of the working fluid liquid at the first pressure; and (c) flash evaporating the working fluid liquid to generate steam. The pressurised working fluid liquid is heated in step (b) by direct heating in a solar radiation absorption device. Also disclosed is an apparatus for generating steam for use in an industrial process. The apparatus comprises a pump (32) for pressurising a working fluid liquid comprising water to a first pressure; a heating unit (34) downstream of the pump (32) for heating the working fluid liquid to a temperature substantially equal to the saturation temperature of the working fluid liquid at the first pressure; and a cooperating throttle valve (36) and flash tank (38) downstream of the heating unit (34) for flash evaporating the working fluid liquid to generate steam. The heating unit (34) comprises a solar radiation absorption device for direct heating of the pressurised working fluid.

No. of Pages : 34 No. of Claims : 48

(12) PATENT APPLICATION PUBLICATION
(19) INDIA
(22) Date of filing of Application :30/09/2013
(21) Application No.8515/DELNP/2013 A
(43) Publication Date : 19/12/2014

(54) Title of the invention : SPARK PLUG ELECTRODE MATERIAL AND SPARK PLUG AND ALSO PROCESS FOR PRODUCING THE SPARK PLUG ELECTRODE MATERIAL AND AN ELECTRODE FOR THE SPARK PLUG

(51) International classification :C22C19/00
(31) Priority Document No :10 2011 007 496.1
(32) Priority Date :15/04/2011
(33) Name of priority country :Germany
(86) International Application No :PCT/EP2012/052561
Filing Date :15/02/2012
(87) International Publication No :WO 2012/139790
(61) Patent of Addition to Application Number :NA
Filing Date :NA
(62) Divisional to Application Number :NA
Filing Date :NA

(71)**Name of Applicant :**
1)ROBERT BOSCH GMBH
Address of Applicant :Postfach 30 02 20 70442 Stuttgart Germany
(72)**Name of Inventor :**
1)OBERLE Juergen
2)MENKEN Lars
3)BOEHM Jochen
4)BAUS Simone

(57) Abstract :
The present invention relates to a spark plug electrode material containing a) from 0.7 to 1.3% by weight of silicon, b) from 0.5 to 1.0% by weight of copper and c) a balance: nickel.

No. of Pages : 15 No. of Claims : 15

(12) PATENT APPLICATION PUBLICATION
(19) INDIA
(22) Date of filing of Application :30/09/2013
(21) Application No.8516/DELNP/2013 A
(43) Publication Date : 19/12/2014

(54) Title of the invention : VOLTAGE REGULATOR FOR AN ALTERNATOR

(51) International classification :H02K19/36,H02K11/02
(31) Priority Document No :TO2011A000312
(32) Priority Date :06/04/2011
(33) Name of priority country :Italy
(86) International Application No :PCT/IB2012/051687
Filing Date :05/04/2012
(87) International Publication No :WO 2012/137162
(61) Patent of Addition to Application Number :NA
Filing Date :NA
(62) Divisional to Application Number :NA
Filing Date :NA

(71)**Name of Applicant :**
1)DENSO MANUFACTURING ITALIA S.P.A.
Address of Applicant :Viale Marisa Bellisario 75 I 66050 San Salvo (Chieti) Italy
(72)**Name of Inventor :**
1)DI RISIO Giammarco
2)PILUSO Mario
3)MICCOLI Rocco
4)FIZZANO Nicola

(57) Abstract :
Voltage regulator (1) in particular for an alternator (10) comprising: a connector (6) designed to perform the function of a communication interface between the alternator (10) and a control unit of an engine to which the alternator (10) is connected; a capacitor (14) designed to be connected to the alternator (10) for performing the function of an anti noise filter at radio frequencies; a processing module (16) designed to be connected to the alternator (10) for managing operation thereof; a heat sink (20) designed to dissipate the heat of the regulator (1); the regulator (1) being characterized in that: it comprises a casing (2) which is designed to be connected to the alternator (10) and defines a main cavity (4) designed to house the connector (6) and a secondary cavity (12) which is adjacent to the main cavity and designed to house the capacitor (14); the casing (2) is able to be fixed to the alternator (10) by means of four mechanical connection elements (8a 8b 8c 8d) two of said connection elements (8b and 8c) being connected to the capacitor (14) a third one (8a) being connected and screwed to a brush holder of the alternator (10) and a fourth one being connected to the processing module (16); the processing module (16) is connected to the connector (6) by means of a conductor (18) and is connected to the four mechanical connection elements (8a 8b 8c 8d); and the heat sink (20) is fixed to the processing module (16).

No. of Pages : 17 No. of Claims : 5

(12) PATENT APPLICATION PUBLICATION
(19) INDIA
(22) Date of filing of Application :30/09/2013
(21) Application No.8517/DELNP/2013 A
(43) Publication Date : 19/12/2014

(54) Title of the invention : ARRANGEMENT FOR INTRA ORAL X RAY IMAGING

(51) International classification :A61B6/14
(31) Priority Document No :20110104
(32) Priority Date :21/03/2011
(33) Name of priority country :Finland
(86) International Application No :PCT/FI2012/050288
Filing Date :21/03/2012
(87) International Publication No :WO 2012/127117
(61) Patent of Addition to Application Number :NA
Filing Date :NA
(62) Divisional to Application Number :NA
Filing Date :NA

(71)**Name of Applicant :**
1)PLANMECA OY
Address of Applicant :Asentajankatu 6 FI 00880 Helsinki Finland
(72)**Name of Inventor :**
1)DE GODZINSKY Christian
2)NYHOLM Kustaa

(57) Abstract :
The invention relates to an intra oral x ray imaging arrangement which includes an imaging sensor (30) arranged positionable within a patient s mouth and a control system of the imaging arrangement. The control system is arranged in functional connection with a means that has been arranged to send measurement signals to the control system informing on position of at least one component included in the arrangement. In connection with the imaging sensor (30) and a radiation source (4) included in the arrangement means (A M G) have been arranged to measure their spatial position and to send measurement signals based on these measurements to the control system arranged with a means to determine based on said measurement signals information on mutual spatial position of the imaging sensor (30) and the radiation source (4) or of a component (40 50) arranged to the radiation source (4).

No. of Pages : 26 No. of Claims : 18

(12) PATENT APPLICATION PUBLICATION
(19) INDIA
(22) Date of filing of Application :03/10/2013
(21) Application No.8586/DELNP/2013 A
(43) Publication Date : 19/12/2014

(54) Title of the invention : CARDS DEVICES SYSTEMS AND METHODS FOR ADVANCED PAYMENT FUNCTIONALITY SELECTION

(51) International classification :G06Q20/00
(31) Priority Document No :61/471246
(32) Priority Date :04/04/2011
(33) Name of priority country :U.S.A.
(86) International Application No :PCT/US2012/031921
Filing Date :02/04/2012
(87) International Publication No :WO 2012/138617
(61) Patent of Addition to Application Number :NA
Filing Date :NA
(62) Divisional to Application Number :NA
Filing Date :NA

(71)**Name of Applicant :**
1)DYNAMICS INC.
Address of Applicant :493 Nixon Road Cheswick PA 15024 U.S.A.
(72)**Name of Inventor :**
1)MULLEN Jeffrey D.

(57) Abstract :
A user is provided with a GUI that may allow the user to change functionality associated with a non battery powered card a battery powered card a payment sticker or another device (e.g. a mobile telephonic device). The GUI may be provided on for example a display screen of a device (e.g. mobile telephonic device or tablet computer) as an application for that device. The GUI may be provided by a website so that a user views the GUI from a web browser. At any time for example a user may change additional functionality performed at payment. A user may change the additional functionality for a card or a button of a card. A remote facility may initiate a piggyback transaction credit transaction and/or other functionality based on the selected functionality by a user.

No. of Pages : 66 No. of Claims : 20

(12) PATENT APPLICATION PUBLICATION
(19) INDIA
(22) Date of filing of Application :30/09/2013
(21) Application No.8493/DELNP/2013 A
(43) Publication Date : 19/12/2014

(54) Title of the invention : HOT ROLLED STEEL SHEET AND PRODUCTION METHOD THEREFOR

(51) International classification :C22C38/06,C22C38/58,C21D8/02
(31) Priority Document No :2011070725
(32) Priority Date :28/03/2011
(33) Name of priority country :Japan
(86) International Application No :PCT/JP2012/058160
Filing Date :28/03/2012
(87) International Publication No :WO 2012/133540
(61) Patent of Addition to Application Number :NA
Filing Date :NA
(62) Divisional to Application Number :NA
Filing Date :NA

(71)**Name of Applicant :**
1)NIPPON STEEL & SUMITOMO METAL CORPORATION
Address of Applicant :6 1 Marunouchi 2 chome Chiyoda ku Tokyo 1008071 Japan
(72)**Name of Inventor :**
1)NOZAKI Takayuki
2)TAKAHASHI Manabu
3)FUJITA Nobuhiro
4)YOSHIDA Hiroshi
5)WATANABE Shinichiro
6)YAMAMOTO Takeshi
7)WAKABAYASHI Chisato
8)OKAMOTO Riki
9)SANO Kohichi

(57) Abstract :
Disclosed is a hot-rolled steel sheet including, by mass%, C:0.02% to 0.5% of C, and the sum of the content of Si and the content of Al is 1.0% to 4.0%. An average pole density of an orientation group from {100}<011> to {223}<110> is 1.0 to 6.5, and a pole density of a crystal orientation {332}<113> is 1.0 to 5.0. A microstructure includes, by of an area ratio, 2% to 30% of retained austenite, 20% to 50% of ferrite, and 10% to 60% of bainite. rC that is a Lankford value in a direction orthogonal to a rolling direction is 0.70 to 1.10, and r30 that is a Lankford value in a direction forming an angle of 30° with the rolling direction is 0.70 to 1.10.

No. of Pages : 71 No. of Claims : 14

(12) PATENT APPLICATION PUBLICATION
(19) INDIA
(22) Date of filing of Application :30/09/2013
(21) Application No.8494/DELNP/2013 A
(43) Publication Date : 19/12/2014

(54) Title of the invention : SYSTEMS AND METHODS FOR IMPROVING PREDICTION OF FUTURE CREDIT RISK PERFORMANCES

(51) International classification :G06Q20/42,G06Q20/24
(31) Priority Document No :61/469781
(32) Priority Date :30/03/2011
(33) Name of priority country :U.S.A.
(86) International Application No :PCT/US2012/031653
Filing Date :30/03/2012
(87) International Publication No :WO 2012/135742
(61) Patent of Addition to Application Number :NA
Filing Date :NA
(62) Divisional to Application Number :NA
Filing Date :NA

(71)**Name of Applicant :**
1)TRANS UNION LLC
Address of Applicant :555 West Adams Street Chicago IL 60661 U.S.A.
(72)**Name of Inventor :**
1)SUI Xuebin
2)PODOSENOV Andrew
3)ELLIS David

(57) Abstract :
Systems and methods are provided for improving prediction of credit risk performances of a plurality of consumers each consumer having a standard credit data file and score. According to a particular aspect a method determines changes in credit data files of the plurality of consumers during a predetermined period of time and combines change data with standard credit data. The method determines a set of credit elements that are predictive of credit risk performances of the plurality of customers by processing the combined change data and standard credit data and identifies an incremental risk value for each of the plurality of consumers by supplementing the corresponding credit data file with the predictive set of credit elements. The method further generates a flag indicative of the identified incremental risk value for each of the plurality of consumers.

No. of Pages : 36 No. of Claims : 20

(12) PATENT APPLICATION PUBLICATION
(19) INDIA
(22) Date of filing of Application :30/09/2013
(21) Application No.8495/DELNP/2013 A
(43) Publication Date : 19/12/2014

(54) Title of the invention : INSTRUMENT ASSEMBLY FOR IMPLANTING A REVISION HIP PROSTHESIS AND ORTHOPAEDIC SURGICAL PROCEDURE FOR USING THE SAME

(51) International classification :A61F2/32,A61F2/46,A61B17/16
(31) Priority Document No :61/472500
(32) Priority Date :06/04/2011
(33) Name of priority country :U.S.A.
(86) International Application No :PCT/US2012/032260
Filing Date :05/04/2012
(87) International Publication No :WO 2012/138824
(61) Patent of Addition to Application Number :NA
Filing Date :NA
(62) Divisional to Application Number :NA
Filing Date :NA

(71)**Name of Applicant :**
1)DEPUY PRODUCTS INC.
Address of Applicant :700 Orthopaedic Drive Warsaw Indiana 46581 U.S.A.
(72)**Name of Inventor :**
1)CARR Jonathan E.
2)HOOD Megan A.
3)SATTERTHWAITE Rodney E.
4)MCCLEARY Larry G.
5)FURBEE Rebecca M.
6)MUHAMMAD William
7)FORTIN Michael J.
8)LASHURE Daniel E.
9)GHEEVARUGHESE Vineetha S.

(57) Abstract :
A modular femoral prosthesis for use during performance of a hip revision procedure includes a proximal body component a distal stem component and a locking bolt. Surgical instruments and methods for use in implanting such a modular femoral prosthesis are disclosed.

No. of Pages : 88 No. of Claims : 80

(12) PATENT APPLICATION PUBLICATION
(19) INDIA
(22) Date of filing of Application :30/09/2013
(21) Application No.8496/DELNP/2013 A
(43) Publication Date : 19/12/2014

(54) Title of the invention : COORDINATED MULTIPLE POINT TRANSMISSION AND RECEPTION

(51) International classification :H04B7/26,H04B7/02
(31) Priority Document No :61/591602
(32) Priority Date :27/01/2012
(33) Name of priority country :U.S.A.
(86) International Application No :PCT/US2013/023137
Filing Date :25/01/2013
(87) International Publication No :WO 2013/112829
(61) Patent of Addition to Application Number :NA
Filing Date :NA
(62) Divisional to Application Number :NA
Filing Date :NA

(71)**Name of Applicant :**
1)NEC LABORATORIES AMERICA INC.
Address of Applicant :4 Independence Way Suite 200 Princeton New Jersey 08540 U.S.A.
(72)**Name of Inventor :**
1)YUE Guosen
2)PRASAD Narayan
3)JIANG Meilong
4)RANGARAJAN Sampath

(57) Abstract :
A method implemented in a mobile communications network supporting coordinated multiple point transmission and reception (CoMP) is disclosed. The method includes transmitting to a user equipment (UE) data in a physical downlink shared channel (PDSCH) and transmitting a reference signal to the UE wherein a union of resource elements (REs) allocated for reference signals transmitted from a subset of a plurality of transmission points (TPs) in a CoMP set are excluded from resource mapping for transmitting the data to the UE. Other methods systems and apparatuses also are disclosed.

No. of Pages : 64 No. of Claims : 17

(12) PATENT APPLICATION PUBLICATION
(19) INDIA
(22) Date of filing of Application :30/09/2013
(21) Application No.8498/DELNP/2013 A
(43) Publication Date : 19/12/2014

(54) Title of the invention : METHOD FOR MANAGING PROCESS AUTOMATION CONTROL AND ASSOCIATED SYSTEM

(51) International classification :G05B19/042,G05B19/418,H04L12/24
(31) Priority Document No :11290166.5
(32) Priority Date :31/03/2011
(33) Name of priority country :EPO
(86) International Application No :PCT/EP2012/055891
Filing Date :30/03/2012
(87) International Publication No :WO 2012/131074
(61) Patent of Addition to Application Number :NA
Filing Date :NA
(62) Divisional to Application Number :NA
Filing Date :NA

(71)**Name of Applicant :**
1)ALSTOM TECHNOLOGY LTD
Address of Applicant :Brown Boveri Strasse 7 CH 5400 Baden Switzerland
(72)**Name of Inventor :**
1)SABOT Herv
2)PERRIER Valrie

(57) Abstract :
The present invention refers to a method for matching elements of a first protocol or standard with elements of a second protocol or standard in a process automation control planning of a plant wherein the elements of the first protocol or standard refer to input/output objects of logical nodes (3) established according to an IEC 61850 protocol and wherein the elements of the second protocol or standard refer to input (7) /output (9) arguments of control programs established according to an IEC 61131 3 standard said control programs being aimed at driving actuation equipments associated to the logical nodes (3) said method comprising the following steps: configuring logical nodes (3) based on predefined classes of logical nodes (3) established according to the protocol IEC 61850 in order to define the input/output objects used by the said logical nodes (3) creating input (7) /output (9) arguments of control programs corresponding to the input/output objects of the logical nodes (3) establishing a matching between the said input (7) /output (9) arguments and the said input/output objects.

No. of Pages : 21 No. of Claims : 11

(12) PATENT APPLICATION PUBLICATION
(19) INDIA
(22) Date of filing of Application :03/10/2013
(21) Application No.8572/DELNP/2013 A
(43) Publication Date : 19/12/2014

(54) Title of the invention : NEGATIVE PRESSURE WOUND THERAPY DRESSING

(51) International classification :A61F13/02
(31) Priority Document No :13/079298
(32) Priority Date :04/04/2011
(33) Name of priority country :U.S.A.
(86) International Application No :PCT/US2012/030829
Filing Date :28/03/2012
(87) International Publication No :WO 2012/138514
(61) Patent of Addition to Application Number :NA
Filing Date :NA
(62) Divisional to Application Number :NA
Filing Date :NA

(71)**Name of Applicant :**
1)TYCO HEALTHCARE GROUP LP
Address of Applicant :15 Hampshire Street Mansfield MA 02048 U.S.A.
(72)**Name of Inventor :**
1)CORLEY Kevin

(57) Abstract :
A wound dressing suitable for use in negative pressure wound therapy system includes a cover layer adapted to establish a reservoir over a wound in which a negative pressure may be maintained. The cover layer includes an opening therein through which atmospheric gasses and wound exudates may pass through the cover layer. A vacuum port is affixed to the cover layer and establishes a substantially fluid tight seal about the opening in the cover layer. The vacuum port includes a hollow interior in fluid communication with the opening in the cover layer and a connector to facilitate connection to a vacuum source. A packing member is affixed to the cover layer to provide a wound dressing that may be applied in a single step process. The packing member is adapted to fill the wound and support the cover layer when a negative pressure is applied to the reservoir.

No. of Pages : 26 No. of Claims : 19

(12) PATENT APPLICATION PUBLICATION
(19) INDIA
(22) Date of filing of Application :03/10/2013
(21) Application No.8573/DELNP/2013 A
(43) Publication Date : 19/12/2014

(54) Title of the invention : AUTOMATED GRAVIMETRIC SCREENING PLATFORM SYSTEM AND METHOD

(51) International classification :A01G7/00,A01G9/24,A01G27/00
(31) Priority Document No :61/476055
(32) Priority Date :15/04/2011
(33) Name of priority country :U.S.A.
(86) International Application No :PCT/US2012/033054
Filing Date :11/04/2012
(87) International Publication No :WO 2012/148676
(61) Patent of Addition to Application Number :NA
Filing Date :NA
(62) Divisional to Application Number :NA
Filing Date :NA

(71)**Name of Applicant :**
1)DOW AGROSCIENCES LLC
Address of Applicant :9330 Zionsville Road Indianapolis IN 46268 U.S.A.
(72)**Name of Inventor :**
1)GOLGOTIU Kirsti A.
2)HERVE Philippe
3)KELLER Douglas
4)SWARTWOOD Troy M.
5)DONALDSON Jeffrey D.

(57) Abstract :
An automated gravimetric screening system (10) and method controls soil moisture in a plurality of potted plants (16) to perform water deficit experiments in a greenhouse using a stationary support platform (12) and pot design that maintains the plants in a static location during the testing. By weighing and re watering the pots from beneath the platform the present system and method permits an upper gantry (22) to capture high resolution images temperature data or other sensor data to quantify the plant stress level or plant canopy characteristics during the experiment.

No. of Pages : 42 No. of Claims : 30

(12) PATENT APPLICATION PUBLICATION
(19) INDIA
(22) Date of filing of Application :03/10/2013
(21) Application No.8574/DELNP/2013 A
(43) Publication Date : 19/12/2014

(54) Title of the invention : PROCESS FOR MANUFACTURING GROUP OF DETERGENT GRANULES

(51) International classification :C11D11/00,C11D1/02,C11D1/12
(31) Priority Document No :2011111867
(32) Priority Date :18/05/2011
(33) Name of priority country :Japan
(86) International Application No :PCT/JP2012/062536
Filing Date :16/05/2012
(87) International Publication No :WO 2012/157681
(61) Patent of Addition to Application Number :NA
Filing Date :NA
(62) Divisional to Application Number :NA
Filing Date :NA

(71)**Name of Applicant :**
1)KAO CORPORATION
Address of Applicant :14 10 Nihonbashi Kayabacho 1 chome Chuo ku Tokyo 1038210 Japan
(72)**Name of Inventor :**
1)NAKAYAMA Takashi
2)WARITA Hiroaki
3)IMAIZUMI Yoshinobu
4)YAMAGUCHI Masahiro

(57) Abstract :
A process for manufacturing a group of detergent granules which includes a step of granulating powdery raw materials for a detergent in a rotating mixer wherein the granulation of the powdery raw materials is conducted with a foamed anionic surfactant composition sprayed in the rotating mixer through a multi fluid nozzle. By this process a group of detergent granules having a medium or low bulk density can be obtained in a high yield. The group of detergent granules thus obtained exhibits high solubility.

No. of Pages : 55 No. of Claims : 11

(12) PATENT APPLICATION PUBLICATION
(19) INDIA
(22) Date of filing of Application :03/10/2013
(21) Application No.8575/DELNP/2013 A
(43) Publication Date : 19/12/2014

(54) Title of the invention : METHOD FOR MANUFACTURING PHOSPHONOCROTONIC ACID DERIVATIVE

(51) International classification :C07F9/40,A61K9/10,A61K9/14
(31) Priority Document No :2011099651
(32) Priority Date :27/04/2011
(33) Name of priority country :Japan
(86) International Application No :PCT/JP2012/061172
Filing Date :26/04/2012
(87) International Publication No :WO 2012/147831
(61) Patent of Addition to Application Number :NA
Filing Date :NA
(62) Divisional to Application Number :NA
Filing Date :NA

(71)**Name of Applicant :**
1)KOWA COMPANY LTD.
Address of Applicant :6 29 Nishiki 3 chome Naka ku Nagoya shi Aichi 4608625 Japan
2)MANAC Incorporated
(72)**Name of Inventor :**
1)INA Shinji
2)YAMAZAKI Takahiro
3)SAKATA Junichi
4)EZAKI Koji
5)SAKAMOTO Katsuhiro

(57) Abstract :
The present invention is a method of manufacturing a compound represented by the following Formula (3) by reacting a compound represented by the following Formula (1) with a compound represented by the following Formula (2) , which comprises a treatment process using an acid or base. [in the formula, R1 represents a C1-6 linear or branched alkyl group that may be substituted by a C6-10 aryl group, a C2-6 linear orbranchedalkenylgroupthatmaybe substitutedby a C6-10 aryl group, a C2-6 linear or branched alkynyl group that may be substituted by a C6-10 aryl group, or a C6-10 aryl group, R2 represents a hydrogen atom, or a C1-6 linear or branched alkyl group that may be substituted by a C6-10 aryl group, R3 represents a C1-6 linear or branched alkyl group, a C6-10 aryl group, or a halogen atom, and X represents a halogen atom, and multiple Rls may be the same or different].

No. of Pages : 55 No. of Claims : 33

(12) PATENT APPLICATION PUBLICATION
(19) INDIA
(22) Date of filing of Application :03/10/2013
(21) Application No.8576/DELNP/2013 A
(43) Publication Date : 19/12/2014

(54) Title of the invention : STRUCTURE FOR FRONT SECTION OF VEHICLE BODY

(51) International classification :B62D25/08
(31) Priority Document No :2011055241
(32) Priority Date :14/03/2011
(33) Name of priority country :Japan
(86) International Application No :PCT/JP2012/056014
Filing Date :08/03/2012
(87) International Publication No :WO 2012/124610
(61) Patent of Addition to Application Number :NA
Filing Date :NA
(62) Divisional to Application Number :NA
Filing Date :NA

(71)**Name of Applicant :**
1)NIPPON STEEL & SUMITOMO METAL CORPORATION
Address of Applicant :6 1 Marunouchi 2 chome Chiyoda ku Tokyo 1008071 Japan
(72)**Name of Inventor :**
1)NIWA Toshiyuki
2)SUEHIRO Masayoshi
3)SETO Atsushi
4)KAWACHI Takeshi
5)MIZUMURA Masaaki
6)DAIMARU Seiichi
7)KAWASAKI Kaoru
8)OIKAWA Hatsuhiko
9)MIYAZAKI Yasunobu
10)SAKIYAMA Tatsuya
11)SHIMIZU Nobutaka
12)YOSHINAGA Naoki

(57) Abstract :
A structure (10) for a front section of a vehicle body in a vehicle body (1) comprising a front chamber (3) disposed on the forward side of a vehicle interior (2) is provided with the following: a pair of front side members (11) located within the front chamber that extend in the longitudinal direction of the vehicle body; a pair of strut towers (16) disposed on either side in the width direction of the front chamber and within which front wheel suspensions are disposed; and reinforcement members (20) that link the top of each strut tower with the front side members that face the strut towers and that extend between the strut towers and the front side members. This configuration allows a structure for a front section of a vehicle body to be provided that can efficiently improve the rigidity of the vehicle body of an automobile against torsion and against lateral bending and that can efficiently reduce the weight of the vehicle body by means of thickness reduction using a high strength steel plate.

No. of Pages : 33 No. of Claims : 7

(12) PATENT APPLICATION PUBLICATION
(19) INDIA
(22) Date of filing of Application :01/10/2013
(21) Application No.8552/DELNP/2013 A
(43) Publication Date : 19/12/2014

(54) Title of the invention : NETWORK SYSTEM SWITCH AND CONNECTION TERMINAL DETECTION METHOD

(51) International classification :H04L12/28
(31) Priority Document No :2011082765
(32) Priority Date :04/04/2011
(33) Name of priority country :Japan
(86) International Application No :PCT/JP2012/058150
Filing Date :28/03/2012
(87) International Publication No :WO 2012/137646
(61) Patent of Addition to Application Number :NA
Filing Date :NA
(62) Divisional to Application Number :NA
Filing Date :NA

(71)**Name of Applicant :**
1)NEC CORPORATION
Address of Applicant :7 1 Shiba 5 chome Minato ku Tokyo 1088001 Japan
(72)**Name of Inventor :**
1)OIKAWA Seiji
2)TAKASHIMA Masanori

(57) Abstract :
In an open flow network it is specified which port number of which node device is connected to a terminal that is connected to a node device group using only the port number (port information) and the source MAC address (Source MAC) of a packet transmitted from a terminal. Specifically a node device compares a port number and source MAC address (Source MAC) pair of the packet sent from the terminal to the node device and a port number and MAC address information pair held in a pre stage search table and confirms agreement (a match). When there is no agreement (a match) the node device notifies a control device using an inquiry information (Packet in) function of overflow. Furthermore the node device compares the destination MAC address (Destination MAC) information of the packet and the MAC address information held in a post stage search table and confirms whether there is agreement (a match).

No. of Pages : 75 No. of Claims : 10

(12) PATENT APPLICATION PUBLICATION
(19) INDIA
(22) Date of filing of Application :01/10/2013
(21) Application No.8553/DELNP/2013 A
(43) Publication Date : 19/12/2014

(54) Title of the invention : CASSETTE FOR PREPARATION OF BEVERAGES

(51) International classification :A47J31/40
(31) Priority Document No :2006511
(32) Priority Date :31/03/2011
(33) Name of priority country :Netherlands
(86) International Application No :PCT/NL2012/050214
Filing Date :30/03/2012
(87) International Publication No :WO 2012/134295
(61) Patent of Addition to Application Number :NA
Filing Date :NA
(62) Divisional to Application Number :NA
Filing Date :NA

(71)**Name of Applicant :**
1)FRIESLAND BRANDS B.V.
Address of Applicant :Stationsplein 4 NL 3818 LE Amersfoort Netherlands
(72)**Name of Inventor :**
1)Bongers Cornelis Margaretha Theodorus Maria

(57) Abstract :
Cassette for preparation of beverages comprising a supply compartment (10a) for holding a beverage ingredient (5) and a dosage unit (20) connected to the supply compartment (10a). The cassette (10) further comprises a fluid inlet (32) a beverage outlet (34) and a mixing compartment (10b) accommodating the fluid inlet (32) and the beverage outlet (34). The mixing compartment (10b) comprises a mixing unit (30) connected to the dosage unit (20) the fluid inlet (32) and to the beverage outlet (34) for preparing a beverage.

No. of Pages : 16 No. of Claims : 15

(12) PATENT APPLICATION PUBLICATION
(19) INDIA
(22) Date of filing of Application :01/10/2013
(21) Application No.8554/DELNP/2013 A
(43) Publication Date : 19/12/2014

(54) Title of the invention : SUBSTRATE WITH A MODIFIED LIQUID CRYSTAL POLYMER MARKING

(51) International classification :B41M3/14,B41M5/28,B42D15/00
(31) Priority Document No :61/490949
(32) Priority Date :27/05/2011
(33) Name of priority country :U.S.A.
(86) International Application No :PCT/EP2012/059663
Filing Date :24/05/2012
(87) International Publication No :WO 2012/163778
(61) Patent of Addition to Application Number :NA
Filing Date :NA
(62) Divisional to Application Number :NA
Filing Date :NA

(71)**Name of Applicant :**
1)SICPA HOLDING SA
Address of Applicant :Av. de Florissant 41 CH 1008 Prilly Switzerland
(72)**Name of Inventor :**
1)TILLER Thomas
2)ROZUMEK Olivier
3)JAUZEIN Tristan
4)CALLEGARI Andrea
5)GREMAUD Frdric
6)KERKAR Brahim

(57) Abstract :
The present invention relates to a marking on an item or substrate which marking is based on a chiral nematic (also called cholesteric) liquid crystal precursor composition. Prior to curing the chiral liquid crystal precursor composition in the chiral liquid crystal state at least one optical property exhibited by the composition is modified by two modifying agents of different types in at least one area of the item or substrate.

No. of Pages : 72 No. of Claims : 50

(12) PATENT APPLICATION PUBLICATION
(19) INDIA
(22) Date of filing of Application :03/10/2013
(21) Application No.8598/DELNP/2013 A
(43) Publication Date : 19/12/2014

(54) Title of the invention : METHODS FOR INCREASING EFFICACY OF FOLR1 CANCER THERAPY

(51) International classification :A61K39/395
(31) Priority Document No :61/471007
(32) Priority Date :01/04/2011
(33) Name of priority country :U.S.A.
(86) International Application No :PCT/US2012/031544
Filing Date :30/03/2012
(87) International Publication No :WO 2012/135675
(61) Patent of Addition to Application Number :NA
Filing Date :NA
(62) Divisional to Application Number :NA
Filing Date :NA

(71)**Name of Applicant :**
1)IMMUNOGEN INC.
Address of Applicant :830 Winter Street Waltham MA 02415 U.S.A.
(72)**Name of Inventor :**
1)CARRIGAN Christina N.
2)WHITEMAN Kathleen R.
3)PAYNE Gillian
4)LADD Sharron

(57) Abstract :
Methods to improve the success of cancer therapies that target the human folate receptor 1 are provided. Kits comprising reagent useful in the methods are further provided.

No. of Pages : 106 No. of Claims : 96

(12) PATENT APPLICATION PUBLICATION
(19) INDIA
(22) Date of filing of Application :03/10/2013
(21) Application No.8599/DELNP/2013 A
(43) Publication Date : 19/12/2014

(54) Title of the invention : LARGE ROLLING BEARING

(51) International classification :F16C19/18,F16C33/58
(31) Priority Document No :10 2011 076 872.6
(32) Priority Date :01/06/2011
(33) Name of priority country :Germany
(86) International Application No :PCT/EP2012/059342
Filing Date :21/05/2012
(87) International Publication No :WO 2012/163707
(61) Patent of Addition to Application Number :NA
Filing Date :NA
(62) Divisional to Application Number :NA
Filing Date :NA

(71)**Name of Applicant :**
1)WOBBEN PROPERTIES GMBH
Address of Applicant :Dreekamp 5 26605 Aurich Germany
(72)**Name of Inventor :**
1)JEPSEN Torsten

(57) Abstract :
The invention relates to a large rolling bearing which is in the form of a multi row ball type revolute joint for absorbing axial loads radial loads and tilting moments. The large rolling bearing has an outer ring an inner ring a first ball row and a second ball row. The first ball row and the second ball row are arranged so as to be spaced apart from one another axially in each case in a four point bearing configuration wherein the first ball row is assigned four raceway portions and the second ball row is assigned four raceway portions which each have a surface for receiving the ball raceway. The invention relates in particular to a large rolling bearing in which the surface area of in each case one raceway portion provided in the inner ring is larger than the surface area of the respectively adjacent raceway portion provided in the inner ring and is equal to the surface area of the respectively diametrically opposite raceway portion provided in the outer ring.

No. of Pages : 24 No. of Claims : 18

(12) PATENT APPLICATION PUBLICATION
(19) INDIA
(22) Date of filing of Application :03/10/2013
(21) Application No.8591/DELNP/2013 A
(43) Publication Date : 19/12/2014

(54) Title of the invention : HOT ROLLED STEEL FOR GASEOUS NITROCARBURIZING AND MANUFACTURING METHOD THEREOF

(51) International classification :C22C38/14,C22C38/58,C21D8/02
(31) Priority Document No :2011089491
(32) Priority Date :13/04/2011
(33) Name of priority country :Japan
(86) International Application No :PCT/JP2012/060151
Filing Date :13/04/2012
(87) International Publication No :WO 2012/141297
(61) Patent of Addition to Application Number :NA
Filing Date :NA
(62) Divisional to Application Number :NA
Filing Date :NA

(71)**Name of Applicant :**
1)NIPPON STEEL & SUMITOMO METAL CORPORATION
Address of Applicant :6 1 Marunouchi 2 chome Chiyoda ku Tokyo 1008071 Japan
(72)**Name of Inventor :**
1)YOKOI Tatsuo
2)SHUTO Hiroshi
3)OKAMOTO Riki
4)FUJITA Nobuhiro
5)NAKANO Kazuaki
6)YAMAMOTO Takeshi

(57) Abstract :
This invention provides a hot rolled steel for gaseous nitrocarburizing with excellent isotropic workability and a manufacturing method thereof. In addition to having an appropriate chemical composition this hot rolled steel for gaseous nitrocarburizing has in the plate thickness center 5/8 to 3/8 of the plate thickness from the surface of the steel plate a 1.0 4.0 average pole density of the orientation group {100}<011> {223}<110> expressed by the arithmetic average of the pole densities of each orientation of {100}<011> {116}<110> {114}<110> {112}<011> and {223}<011> and has a 1.0 4.8 pole density of the crystal orientation {332}<113>. This hot rolled steel sheet further has a 10μm or smaller average crystal particle diameter in the plate thickness center and the microstructure comprises perlite (over 6% by component percentage) and ferrite (the remaining portion).

No. of Pages : 81 No. of Claims : 11

(12) PATENT APPLICATION PUBLICATION
(19) INDIA
(22) Date of filing of Application :03/10/2013
(21) Application No.8592/DELNP/2013 A
(43) Publication Date : 19/12/2014

(54) Title of the invention : FLOW CONTROL SCREEN ASSEMBLY HAVING REMOTELY DISABLED REVERSE FLOW CONTROL CAPABILITY

(51) International classification :E21B43/08,E21B43/12
(31) Priority Document No :13/172661
(32) Priority Date :29/06/2011
(33) Name of priority country :U.S.A.
(86) International Application No :PCT/US2012/041794
Filing Date :10/06/2012
(87) International Publication No :WO 2013/003009
(61) Patent of Addition to Application Number :NA
Filing Date :NA
(62) Divisional to Application Number :NA
Filing Date :NA

(71)**Name of Applicant :**
1)HALLIBURTON ENERGY SERVICES INC.
Address of Applicant :2601 Beltline Road Carrollton TX 75006 U.S.A.
(72)**Name of Inventor :**
1)VEIT Jan

(57) Abstract :
A flow control screen having a flow path between the interior of a base pipe and a filter medium. A valve assembly including a valve plug a ball retainer and a piston body with a collet assembly is disposed within the flow path in an opening of a housing disposed about the base pipe. The collet assembly is radially outwardly constrained by a radially reduced section of the opening in a first position preventing entry of the valve plug therein and radially outwardly unconstrained by the radially reduced section in a second position. Reverse flow is initially prevented as internal differential pressure seats the valve plug on a seat of the opening and causes the piston body to shift to the second position upon reaching a predetermined threshold. Thereafter external differential pressure causes the valve plug to enter the piston body and contact the ball retainer thereby allowing reverse flow.

No. of Pages : 26 No. of Claims : 20

(12) PATENT APPLICATION PUBLICATION
(19) INDIA
(22) Date of filing of Application :03/10/2013
(21) Application No.8595/DELNP/2013 A
(43) Publication Date : 19/12/2014

(54) Title of the invention : APPARATUS FOR DEPLOYING A STENT GRAFT

(51) International classification :A61F2/84
(31) Priority Document No :1106017.5
(32) Priority Date :08/04/2011
(33) Name of priority country :U.K.
(86) International Application No :PCT/GB2012/050724
Filing Date :30/03/2012
(87) International Publication No :WO 2012/136984
(61) Patent of Addition to Application Number :NA
Filing Date :NA
(62) Divisional to Application Number :NA
Filing Date :NA

(71)**Name of Applicant :**
1)LOMBARD MEDICAL LIMITED
Address of Applicant :Lombard Medical House 4 Trident Park Basil Hill Road Didcot Oxfordshire OX11 7HJ U.K.
(72)**Name of Inventor :**
1)BAYLIS Mark

(57) Abstract :
Apparatus for deploying a tubular medical (200) device in vivo comprises an elongate element (10) for passing into the bore of the medical device a deployment device having at least one arm for engaging with the medical device the arm being moveable in a radial direction relative to the longitudinal axis of the elongate element from a first position to a second position the second position being spaced radially further from the elongate element than the first position and a thread (60) for the arm said thread being associated with the arm such that pulling on the thread moves said arm from the second position towards the first position whereby in use movement of the arm from the first position to the second position enables radial deployment of the medical device.

No. of Pages : 21 No. of Claims : 28

(12) PATENT APPLICATION PUBLICATION
(19) INDIA
(22) Date of filing of Application :03/10/2013
(21) Application No.8596/DELNP/2013 A
(43) Publication Date : 19/12/2014

(54) Title of the invention : PRODUCTION OF AROMATICS FROM NONCATALYTICALLY CRACKED FATTY ACID BASED OILS

(51) International classification :C07C15/04,C07C15/06,C07C15/085
(31) Priority Document No :61/478177
(32) Priority Date :22/04/2011
(33) Name of priority country :U.S.A.
(86) International Application No :PCT/US2012/034648
Filing Date :23/04/2012
(87) International Publication No :WO 2012/145740
(61) Patent of Addition to Application Number :NA
Filing Date :NA
(62) Divisional to Application Number :NA
Filing Date :NA

(71)**Name of Applicant :**
1)UNIVERSITY OF NORTH DAKOTA
Address of Applicant :264 Centennial Drive Twamley Hall Room 105A Grand Forks North Dakota 58202 U.S.A.
(72)**Name of Inventor :**
1)SEAMES Wayne
2)TANDE Brian

(57) Abstract :
A method for producing aromatic compounds from fatty acid oils including heating a fatty acid oil to a temperature between about 100° C to about 800° C at a pressure between about vacuum conditions and about 200 psia for a time sufficient to crack the oil and produce a cracked fatty acid oil; removing undesired materials unreacted oil heavy ends and light ends from the cracked fatty acid oil; heating the resulting purified cracked fatty acid oil to a temperature between about 100° C to about 800° C at a pressure between about vacuum conditions and about 200 psia for a time sufficient to reform alkenes and alkanes in the cracked fatty acid oil into aromatic compounds and produce a reformed fatty acid oil; and extracting components from the reformed fatty acid oil to produce a mixture of chemical products containing between 5% and 90% aromatic compounds by weight.

No. of Pages : 21 No. of Claims : 22

(12) PATENT APPLICATION PUBLICATION
(19) INDIA
(22) Date of filing of Application :03/10/2013
(21) Application No.8577/DELNP/2013 A
(43) Publication Date : 19/12/2014

(54) Title of the invention : DEVICE FOR DAMPING OF SOUNDS AND MOTOR VEHICLE COMPRISING SUCH A DEVICE

(51) International classification :F02B77/13,B60R13/08,F04B39/00
(31) Priority Document No :11503943
(32) Priority Date :05/05/2011
(33) Name of priority country :Sweden
(86) International Application No :PCT/SE2012/050399
Filing Date :12/04/2012
(87) International Publication No :WO 2012/150896
(61) Patent of Addition to Application Number :NA
Filing Date :NA
(62) Divisional to Application Number :NA
Filing Date :NA

(71)**Name of Applicant :**
1)SCANIA CV AB
Address of Applicant :S 151 87 Sdertlje Sweden
(72)**Name of Inventor :**
1)GLAV Ragnar

(57) Abstract :
Device for damping of sounds which comprises a casing (11) intended to be placed round one or more sou nd generating equipment items and a sound damping panel (20) via which air is allowed to flow out from the casing. The sound damping panel comprises a throughflow space (23) situated between a first wall (21) which faces towards the inside of the casing and a second wall (22) which extends along and at a distance from the first wall. The first wall is provided with a plurality of apertures (24) via which air is allowed to flow into the throughflow space. A diffuser means (25) is situated on the second wall directly opposite each aperture to deflect the air which via this aperture flows towards the second wall so that this air flow then proceeds in various different directions in the throughflow space. At least some of the internal surfaces of the throughflow space are covered with sound absorbing material (29). Air is allowed to flow from the throughflow space and proceed to the surroundings via outlet apertures (31) of the sou nd damping panel.

No. of Pages : 22 No. of Claims : 15

(12) PATENT APPLICATION PUBLICATION
(19) INDIA
(22) Date of filing of Application :03/10/2013
(21) Application No.8578/DELNP/2013 A
(43) Publication Date : 19/12/2014

(54) Title of the invention : HIGH STRENGTH COLD ROLLED STEEL SHEET WITH HIGHLY EVEN STRETCHABILTY AND EXCELLENT HOLE EXPANSIBILITY AND PROCESS FOR PRODUCING SAME

(51) International classification :C22C38/00,C21D9/46,C22C38/06
(31) Priority Document No :2011095254
(32) Priority Date :21/04/2011
(33) Name of priority country :Japan
(86) International Application No :PCT/JP2012/060634
Filing Date :19/04/2012
(87) International Publication No :WO 2012/144567
(61) Patent of Addition to Application Number :NA
Filing Date :NA
(62) Divisional to Application Number :NA
Filing Date :NA

(71)**Name of Applicant :**
1)NIPPON STEEL & SUMITOMO METAL CORPORATION
Address of Applicant :6 1 Marunouchi 2 chome Chiyoda ku Tokyo 1008071 Japan
(72)**Name of Inventor :**
1)TODA Yuri
2)OKAMOTO Riki
3)FUJITA Nobuhiro
4)SANO Kohichi
5)YOSHIDA Hiroshi
6)OGAWA Toshio

(57) Abstract :
A high strength cold rolled steel sheet having highly even stretchability and excellent hole expansibility which contains 0.01 0.4% C 0.001 2.5% Si 0.001 4.0% Mn 0.001 0.15% P 0.0005 0.03% S 0.001 2.0% Al 0.0005 0.01% N and 0.0005 0.01% O Si+Al being less than 1.0% and the remainder comprising iron and incidental impurities. In the steel sheet a thickness direction middle part has an average pole density for {100}<011> to {223}<110> orientations of 5.0 or less and a pole density for {332}<113> crystal orientation of 4.0 or less. The steel sheet has a metallographic structure which comprises in terms of areal proportion 5 80% ferrite 5 80% bainite and up to 1% martensite the total of martensite pearlite and retained austenite being 5% or less. The steel sheet has an r value for the direction perpendicular to the rolling direction (rC) of 0.70 or above and an r value for a direction making an angle of 30º with the rolling direction (r30) of 1.10 or below.

No. of Pages : 66 No. of Claims : 15

(12) PATENT APPLICATION PUBLICATION
(19) INDIA
(22) Date of filing of Application :03/10/2013
(21) Application No.8579/DELNP/2013 A
(43) Publication Date : 19/12/2014

(54) Title of the invention : NOVEL MODULATORS OF CORTICAL DOPAMINERGIC AND NMDA RECEPTOR MEDIATED GLUTAMATERGIC NEUROTRANSMISSION

(51) International classification	:C07C317/22,C07D205/04,C07D295/088
(31) Priority Document No	:PA 2011 70187
(32) Priority Date	:19/04/2011
(33) Name of priority country	:Denmark
(86) International Application No Filing Date	:PCT/EP2012/056959 :17/04/2012
(87) International Publication No	:WO 2012/143337
(61) Patent of Addition to Application Number Filing Date	:NA :NA
(62) Divisional to Application Number Filing Date	:NA :NA

(71)**Name of Applicant :**
1)INTEGRATIVE RESEARCH LABORATORIES SWEDEN AB
Address of Applicant :c/o Nicholas Waters Solbnksgatan 22 SE 411 19 Gteborg Sweden
(72)**Name of Inventor :**
1)SONESSON Clas
2)KARLSSON Jonas
3)SVENSSON Peder

(57) Abstract :
The present invention relates to novel substituted phenoxyethylamine derivatives useful as modulators of cortical and basal ganglia dopaminergic and N methyl D aspartate (NMDA) receptor mediated glutamatergic neurotransmission. In other aspects the invention relates to the use of these compounds in a method for therapy and to pharmaceutical compositions comprising the compounds of the invention.

No. of Pages : 50 No. of Claims : 14

(12) PATENT APPLICATION PUBLICATION
(19) INDIA
(22) Date of filing of Application :03/10/2013
(21) Application No.8611/DELNP/2013 A
(43) Publication Date : 19/12/2014

(54) Title of the invention : A DYNAMICALLY SELF ORGANIZING AD HOC TDMA COMMUNICATIONS SYNCHRONIZATION METHOD

(51) International classification :H04B7/00
(31) Priority Document No :61/472216
(32) Priority Date :06/04/2011
(33) Name of priority country :U.S.A.
(86) International Application No :PCT/IL2012/000142
Filing Date :01/04/2012
(87) International Publication No :WO 2012/137194
(61) Patent of Addition to Application Number :NA
Filing Date :NA
(62) Divisional to Application Number :NA
Filing Date :NA

(71)**Name of Applicant :**
1)MAXTECH COMMUNICATION NETWORKS LTD.
Address of Applicant :2 Haprat St. 81101 Yavne Israel
(72)**Name of Inventor :**
1)HONIG Alex Yakov
2)MATUSOVSKY Yakir
3)HANUNI Uzi
4)DAGAN Boaz

(57) Abstract :
A method and system for TDMA synchronization including providing an ad hoc TDMA mobile communication network the communication network includes a plurality of mobile units transmitting an information packet from a mobile unit of the plurality of mobile units to each remaining one of the plurality of mobile units. The method and system further including comparing at each remaining one of the plurality of mobile units the corresponding preamble detection time trx i with a predetermined time parameter tc0rr and adjusting the corresponding preamble detection time trx i of each remaining one of the plurality of mobile units accordingly. In addition a method for logical timeslot synchronization and its enhancement using directed synchronization procedure with a refresh procedure are disclosed if a transmitting mobile unit exits the communication network and reconnects thereto.

No. of Pages : 30 No. of Claims : 48

(12) PATENT APPLICATION PUBLICATION
(19) INDIA
(22) Date of filing of Application :30/09/2013
(21) Application No.8524/DELNP/2013 A
(43) Publication Date : 19/12/2014

(54) Title of the invention : PESSARY DEVICE HAVING IMPROVED COMFORT

(51) International classification :A61F2/00
(31) Priority Document No :13/084014
(32) Priority Date :11/04/2011
(33) Name of priority country :U.S.A.
(86) International Application No :PCT/US2012/032073
Filing Date :04/04/2012
(87) International Publication No :WO 2012/141951
(61) Patent of Addition to Application Number :NA
Filing Date :NA
(62) Divisional to Application Number :NA
Filing Date :NA

(71)**Name of Applicant :**
1)THE PROCTER & GAMBLE COMPANY
Address of Applicant :One Procter & Gamble Plaza Cincinnati Ohio 45202 U.S.A.
(72)**Name of Inventor :**
1)KARAPASHA Nancy

(57) Abstract :
A non expandable intravaginal pessary device capable of providing varying pressure along the length of a woman s urethra when inserted into the woman s vagina. The device has a top a bottom and a sidewall that extends between the top and the bottom and the sidewall top and bottom form an enclosed outer periphery defining a total area of the device. The sidewall has a convex bottom portion a mid section and a convex top portion. The convex bottom portion connects the bottom to the mid section the convex upper portion connects the top to the mid section and the convex bottom portion and the convex upper portion are capable of providing pressure to two distinct locations on a woman s urethra when inserted into a woman s vagina.

No. of Pages : 26 No. of Claims : 10

(12) PATENT APPLICATION PUBLICATION
(19) INDIA
(22) Date of filing of Application :30/09/2013
(21) Application No.8525/DELNP/2013 A
(43) Publication Date : 19/12/2014

(54) Title of the invention : SYSTEM AND METHOD PROVIDING DEPENDENCY NETWORKS THROUGHOUT APPLICATIONS FOR ATTACK RESISTANCE

(51) International classification :G06F21/22
(31) Priority Document No :NA
(32) Priority Date :NA
(33) Name of priority country :NA
(86) International Application No :PCT/CA2011/050157
Filing Date :24/03/2011
(87) International Publication No :WO 2012/126083
(61) Patent of Addition to Application Number :NA
Filing Date :NA
(62) Divisional to Application Number :NA
Filing Date :NA

(71)**Name of Applicant :**
1)IRDETO B.V.
Address of Applicant :Taurus Avenue 105 NL 2132 LS Hoofddorp Netherlands
(72)**Name of Inventor :**
1)LIEM Clifford
2)ZHOU Yongxin
3)GU Yuan Xiang

(57) Abstract :
A method and system is provided to automatically propagate dependencies from one part of a software application to another previously unrelated part. Propagation of essential code functionality and data to other parts of the program serves to augment common arithmetic functions with Mixed Boolean Arithmetic (MBA) formulae that are bound to pre existing parts of the program. A software application is first analyzed on a compiler level to determine the program properties which hold in the program. Thereafter conditions are constructed based on these properties and encoded in formulae that encode the condition in data and operations. Real dependencies throughout the application are therefore created such that if a dependency is broken the program will no longer function correctly.

No. of Pages : 47 No. of Claims : 33

(12) PATENT APPLICATION PUBLICATION
(19) INDIA
(22) Date of filing of Application :30/09/2013
(21) Application No.8526/DELNP/2013 A
(43) Publication Date : 19/12/2014

(54) Title of the invention : LIGHT EMITTING ELEMENT

(51) International classification :H01L51/50,C09K11/06
(31) Priority Document No :2011064553
(32) Priority Date :23/03/2011
(33) Name of priority country :Japan
(86) International Application No :PCT/JP2012/054678
Filing Date :20/02/2012
(87) International Publication No :WO 2012/127990
(61) Patent of Addition to Application Number :NA
Filing Date :NA
(62) Divisional to Application Number :NA
Filing Date :NA

(71)**Name of Applicant :**
1)SEMICONDUCTOR ENERGY LABORATORY CO. LTD.
Address of Applicant :398 Hase Atsugi shi Kanagawa 2430036 Japan
(72)**Name of Inventor :**
1)SEO Satoshi
2)SHITAGAKI Satoko
3)OHSAWA Nobuharu
4)INOUE Hideko
5)SUZUKI Kunihiko

(57) Abstract :
A light emitting element having high external quantum efficiency is provided. A light emitting element having low drive voltage is provided. Provided is a light emitting element which includes a light emitting layer containing a phosphorescent compound a first organic compound and a second organic compound between a pair of electrodes. A combination of the first organic compound and the second organic compound forms an exciplex (excited complex). An emission spectrum of the exciplex overlaps with an absorption band located on the longest wavelength side of an absorption spectrum of the phosphorescent compound. A peak wavelength of the emission spectrum of the exciplex is longer than or equal to a peak wavelength of the absorption band located on the longest wavelength side of the absorption spectrum of the phosphorescent compound.

No. of Pages : 95 No. of Claims : 19

(12) PATENT APPLICATION PUBLICATION
(19) INDIA
(22) Date of filing of Application :04/10/2013
(21) Application No.8621/DELNP/2013 A
(43) Publication Date : 19/12/2014

(54) Title of the invention : DRIVE DEVICE FOR ELECTRIC VEHICLE

(51) International classification :B60K7/00,B60B35/18,B60K17/14
(31) Priority Document No :2011049187
(32) Priority Date :07/03/2011
(33) Name of priority country :Japan
(86) International Application No :PCT/JP2011/055395
Filing Date :08/03/2011
(87) International Publication No :WO 2012/120647
(61) Patent of Addition to Application Number :NA
Filing Date :NA
(62) Divisional to Application Number :NA
Filing Date :NA

(71)**Name of Applicant :**
1)NTN CORPORATION
Address of Applicant :3 17 Kyomachibori 1 chome Nishi ku Osaka shi Osaka 5500003 Japan
(72)**Name of Inventor :**
1)SUZUKI Minoru
2)MAKINO Tomoaki

(57) Abstract :
The objective of the present invention is to increase the rotation accuracy of an input shaft of a speed reduction unit increase the durability of bearings and reduce rotational noise by improving a supporting structure of the input shaft of the speed reduction unit. A drive device for an electric vehicle comprises: an electric motor; a speed reduction unit (12) including an input shaft (13) that is driven by the output of the electric motor (11); and a hub unit (15) that is rotated and driven by an output member (14) of the speed reduction unit (12). The input shaft (13) of the speed reduction unit (12) is supported by bearings (58 59) provided at two locations in the axial direction. The drive device is constructed such that the bearings (58 59) provided at said two locations are both attached to the output member (14).

No. of Pages : 38 No. of Claims : 10

(12) PATENT APPLICATION PUBLICATION
(19) INDIA
(22) Date of filing of Application :03/10/2013
(21) Application No.8612/DELNP/2013 A
(43) Publication Date : 19/12/2014

(54) Title of the invention : EXHAUST PURIFICATION APPARATUS FOR INTERNAL COMBUSTION ENGINE

(51) International classification :F01N3/02,B01D53/94,F01N3/08
(31) Priority Document No :NA
(32) Priority Date :NA
(33) Name of priority country :NA
(86) International Application No :PCT/JP2011/065278
Filing Date :04/07/2011
(87) International Publication No :WO 2013/005291
(61) Patent of Addition to Application Number :NA
Filing Date :NA
(62) Divisional to Application Number :NA
Filing Date :NA

(71)**Name of Applicant :**
1)TOYOTA JIDOSHA KABUSHIKI KAISHA
Address of Applicant :1 Toyota cho Toyota shi Aichi 4718571 Japan
(72)**Name of Inventor :**
1)NAKANO Takanori
2)KATAYAMA Haruyuki
3)HIROTA Shinya
4)TOSHIOKA Shunsuke
5)FUKUDA Koichiro

(57) Abstract :
The purpose of the present invention is to suppress degradation of a PM sensor and a decrease in detection accuracy of the amount of PM in a configuration in which a urea addition unit and a selective reduction type NOx catalyst (NOx catalyst) are provided downstream of a particulate filter (filter) in an internal combustion engine exhaust passageway the PM sensor being disposed downstream of the filter. According to the present invention in an exhaust passageway (2) of an internal combustion engine (1) a first NOx catalyst (4) and a second NOx catalyst (5) are disposed downstream of a filter (3) successively from the upstream side along the flow of exhaust. A urea addition unit (6) is disposed between the filter (3) and the first NOx catalyst (4). A PM sensor (7) is disposed between the first NOx catalyst (4) and the second NOx catalyst (5).

No. of Pages : 16 No. of Claims : 2

(12) PATENT APPLICATION PUBLICATION
(19) INDIA
(22) Date of filing of Application :03/10/2013
(21) Application No.8613/DELNP/2013 A
(43) Publication Date : 19/12/2014

(54) Title of the invention : PHARMACEUTICAL COMPOSITIONS FOR PREVENTING AND/OR TREATING AN HIV DISEASE IN HUMANS

(51) International classification	:A61K39/09,A61K39/21,A61K39/295
(31) Priority Document No	:PCT/CN2011/072481
(32) Priority Date	:06/04/2011
(33) Name of priority country	:China
(86) International Application No	:PCT/IB2012/000857
Filing Date	:06/04/2012
(87) International Publication No	:WO 2012/137071
(61) Patent of Addition to Application Number	:NA
Filing Date	:NA
(62) Divisional to Application Number	:NA
Filing Date	:NA

(71)**Name of Applicant :**
1)BIOVAXIM LIMITED
Address of Applicant :Finsgate 5 7 Cranwood Street EC1 V9EE London U.K.
2)UNIVERSIT‰ PARIS DESCARTES
3)INSTITUT DE RECHERCHE POUR LE DEVELOPPEMENT (IRD)
(72)**Name of Inventor :**
1)ANDRIEU Jean Marie
2)LU Louis

(57) Abstract :
The present invention relates to pharmaceutical compositions comprising a mixture of a specific HIV antigen and a non-pathogenic living bacterium. Said specific HIV antigen comprises one or more epitopes from Gag and/or Pol proteins and is preferably under a particulate form. Said bacterium is preferably Lactobacillus plantarum. These compositions are useful for pre venting and/or treating an HIV disease in humans.

No. of Pages : 79 No. of Claims : 33

(12) PATENT APPLICATION PUBLICATION
(19) INDIA
(22) Date of filing of Application :03/10/2013
(21) Application No.8614/DELNP/2013 A
(43) Publication Date : 19/12/2014

(54) Title of the invention : POLYBENZOXAZOLE RESIN AND PRECURSOR THEREOF

(51) International classification :C08G73/22,C08L79/04,H01B3/30
(31) Priority Document No :2011086300
(32) Priority Date :08/04/2011
(33) Name of priority country :Japan
(86) International Application No :PCT/JP2012/059242
Filing Date :04/04/2012
(87) International Publication No :WO 2012/137840
(61) Patent of Addition to Application Number :NA
Filing Date :NA
(62) Divisional to Application Number :NA
Filing Date :NA

(71)**Name of Applicant :**
1)MITSUBISHI GAS CHEMICAL COMPANY INC.
Address of Applicant :5 2 Marunouchi 2 chome Chiyoda ku Tokyo 1008324 Japan
(72)**Name of Inventor :**
1)HONDA Eiichi

(57) Abstract :
Provided are: a polybenzoxazole resin having a repeating unit represented by general formula (1) which has excellent electric insulation properties heat resistance mechanical properties physical properties dimensional stability and the like; and a polybenzoxazole precursor which enables the production of the polybenzoxazole resin and has excellent solubility in solvents and storage stability. (In formula (1) R represents a tetravalent aromatic group; each N and each O that are bound to R are paired wherein N and O in each pair are respectively bound to adjacent carbon atoms located on the same aromatic ring; R represents an alkanediyl group having 1 6 carbon atoms; and n represents an integer of 2 10000.)

No. of Pages : 40 No. of Claims : 10

(12) PATENT APPLICATION PUBLICATION
(19) INDIA
(22) Date of filing of Application :03/10/2013
(21) Application No.8615/DELNP/2013 A
(43) Publication Date : 19/12/2014

(54) Title of the invention : WATER SOLUBLE AZO DYE DYE COMPOSITION CONTAINING SAME AND DYEING METHOD USING SAME

(51) International classification	:C09B33/052,C09B45/28,C09D11/00
(31) Priority Document No	:2011085037
(32) Priority Date	:07/04/2011
(33) Name of priority country	:Japan
(86) International Application No	:PCT/JP2012/058963
Filing Date	:02/04/2012
(87) International Publication No	:WO 2012/137736
(61) Patent of Addition to Application Number	:NA
Filing Date	:NA
(62) Divisional to Application Number	:NA
Filing Date	:NA

(71)**Name of Applicant :**
1)NIPPON KAYAKU KABUSHIKI KAISHA
Address of Applicant :11 2 Fujimi 1 chome Chiyoda ku Tokyo 1028172 Japan
(72)**Name of Inventor :**
1)NAGATSUKA Shinya
2)TERANISHI Makoto
3)SASAKI Keijyou
4)UTO Junichi
5)YAMAMOTO Nobutaka
6)KOSHIKAWA Emi
7)KAKO Ryutaro
8)YAMAGUCHI Toru

(57) Abstract :
The present invention relates to a disazo compound or salt thereof expressed by the following formula (1) (in the formula Ar1 represents a phenyl group that is substituted with a hydroxy group or a methoxy group at the ortho position with regards to the azo group and then substituted with a carboxyl group; and Ar2 represents a phenyl group that is substituted with a hydroxy group or a methoxy group at the ortho position with regards to the azo group and which may then be substituted with a sulfonate group sulfonamide group or carboxyl group).

No. of Pages : 27 No. of Claims : 12

(12) PATENT APPLICATION PUBLICATION
(19) INDIA
(22) Date of filing of Application :03/10/2013

(21) Application No.8616/DELNP/2013 A
(43) Publication Date : 19/12/2014

(54) Title of the invention : METHOD OF PARAMETERIZING RULES FOR BROADCASTING PERSONAL DATA

(51) International classification	:G06F21/00,G06Q10/00,G06Q10/10
(31) Priority Document No	:1152934
(32) Priority Date	:05/04/2011
(33) Name of priority country	:France
(86) International Application No	:PCT/EP2012/054718
Filing Date	:16/03/2012
(87) International Publication No	:WO 2012/136462
(61) Patent of Addition to Application Number	:NA
Filing Date	:NA
(62) Divisional to Application Number	:NA
Filing Date	:NA

(71)**Name of Applicant :**
1)ALCATEL LUCENT
Address of Applicant :3 avenue Octave Grard F 75007 Paris France
(72)**Name of Inventor :**
1)PERGAMENT David
2)AGHASARYAN Armen
3)GANASCIA Jean Gabriel

(57) Abstract :
The invention relates to a method of parameterizing rules for broadcasting personal data of a user (U) of a social network in relation to a target contact (CC). The method consists in retrieving behavioural data of the target contact. As a function of these behavioural data retrieved and of a sensitivities profile predefined by the user an evaluation score is allocated to the target contact regarding the danger that is represented by propagating the personal data of the user. As a function of the score allocated to the target contact a recommendation for parameterizing the rules for broadcasting their personal data is emitted for the user s purposes.

No. of Pages : 25 No. of Claims : 11

(12) PATENT APPLICATION PUBLICATION
(19) INDIA
(22) Date of filing of Application :03/10/2013
(21) Application No.8607/DELNP/2013 A
(43) Publication Date : 19/12/2014

(54) Title of the invention : A FILTER GROUP

(51) International classification :B01D29/15
(31) Priority Document No :RE2011A000028
(32) Priority Date :20/04/2011
(33) Name of priority country :Italy
(86) International Application No :PCT/IB2012/000799
Filing Date :18/04/2012
(87) International Publication No :WO 2012/143793
(61) Patent of Addition to Application Number :NA
Filing Date :NA
(62) Divisional to Application Number :NA
Filing Date :NA

(71)**Name of Applicant :**
1)UFI INNOVATION CENTER S.R.L.
Address of Applicant :20 Viale Trento I 38061 Ala (Trento) Italy
(72)**Name of Inventor :**
1)GIRONDI Giorgio

(57) Abstract :
A filter cartridge (30) comprising a filter membrane (33) and at least a support element (31) fixed to the filter membrane (33) the support element being provided with at least a snap engaging element (36) suitable for snap engaging to a support body (20) following a reciprocal translation between the filter cartridge (30) and the support body (20) along a nearing axis (A) the support element (31) further comprising disengaging means (38) suitable for disengaging the snap engaging element (36) from the support body (20) following a reciprocal rotation between the filter cartridge (30) and the support body about the axis (A).

No. of Pages : 21 No. of Claims : 13

(12) PATENT APPLICATION PUBLICATION
(19) INDIA
(22) Date of filing of Application :03/10/2013
(21) Application No.8608/DELNP/2013 A
(43) Publication Date : 19/12/2014

(54) Title of the invention : USE OF THE OLFACTOMEDIN 4 PROTEIN (OLFM4) IN COLORECTAL CANCER DIAGNOSIS

(51) International classification :C12Q1/68
(31) Priority Document No :NA
(32) Priority Date :NA
(33) Name of priority country :NA
(86) International Application No :PCT/IB2011/000787
Filing Date :02/03/2011
(87) International Publication No :WO 2012/117267
(61) Patent of Addition to Application Number :NA
Filing Date :NA
(62) Divisional to Application Number :NA
Filing Date :NA

(71)**Name of Applicant :**
1)INSTITUT DE CANCEROLOGIE DE LOUEST
Address of Applicant :2 rue Moll F 49100 Angers France
(72)**Name of Inventor :**
1)GUETTE Catherine
2)COQUERET Olivier
3)BARRE Benjamin
4)GAMELIN Erick

(57) Abstract :
The present invention provides a method for diagnosing KRAS mutations in colorectal cancers by measuring the level of OLFM4. In another aspect the present invention relates a method of predicting the responds to a chemotherapeutic agent of a subject suffering from a colorectal cancer: according to the present invention the by determining the OLFM4 levels. According to the present invention the response can be predicted by determining the OLFM4 levels. This result in turn permits the design or the adaptation of a treatment of the said subject with the said chemotherapeutic agent.

No. of Pages : 49 No. of Claims : 24

(12) PATENT APPLICATION PUBLICATION
(19) INDIA
(22) Date of filing of Application :03/10/2013
(21) Application No.8609/DELNP/2013 A
(43) Publication Date : 19/12/2014

(54) Title of the invention : METHOD AND DEVICE FOR CALIBRATING A FUEL METERING SYSTEM OF A MOTOR VEHICLE

(51) International classification :F02D41/14,F02D41/24
(31) Priority Document No :10 2011 007 563.1
(32) Priority Date :18/04/2011
(33) Name of priority country :Germany
(86) International Application No :PCT/EP2012/054641
Filing Date :16/03/2012
(87) International Publication No :WO 2012/143187
(61) Patent of Addition to Application Number :NA
Filing Date :NA
(62) Divisional to Application Number :NA
Filing Date :NA

(71)**Name of Applicant :**
1)ROBERT BOSCH GMBH
Address of Applicant :Postfach 30 02 20 70442 Stuttgart Germany
(72)**Name of Inventor :**
1)WALTER Michael
2)BOLLINGER Stefan

(57) Abstract :
The present invention relates to a method for calibrating a fuel metering system of an internal combustion engine in particular of a motor vehicle in which a first injector is actuated with a first test injection with a first actuation duration and a second injector is actuated with a second test injection with a second actuation duration and a resulting overall excitation is detected as a superposition of a first excitation of the first injector and a second excitation of the second injector wherein from said overall excitation there is determined an overall vibration from which the first excitation of the first injector and the second excitation of the second injector are reconstructed and on the basis of the respective excitation as a respective quantity signal a zero quantity calibration is performed for the respective injector independently of the other injector whereby a respective minimum actuation duration for a respective injector is determined. A corresponding device is also provided.

No. of Pages : 19 No. of Claims : 9

(12) PATENT APPLICATION PUBLICATION
(19) INDIA
(22) Date of filing of Application :03/10/2013
(21) Application No.8610/DELNP/2013 A
(43) Publication Date : 19/12/2014

(54) Title of the invention : CONTROL DEVICE HAVING A DIGITAL INTERFACE

(51) International classification :B60R21/00
(31) Priority Document No :10 2011 007 849.5
(32) Priority Date :21/04/2011
(33) Name of priority country :Germany
(86) International Application No :PCT/EP2012/055521
Filing Date :28/03/2012
(87) International Publication No :WO 2012/143217
(61) Patent of Addition to Application Number :NA
Filing Date :NA
(62) Divisional to Application Number :NA
Filing Date :NA

(71)**Name of Applicant :**
1)ROBERT BOSCH GMBH
Address of Applicant :Postfach 30 02 20 70442 Stuttgart Germany
(72)**Name of Inventor :**
1)SZUECS Franz
2)PRIEMER Ingo
3)DOEHREN Stefan

(57) Abstract :
The invention relates to a control device (70) and a transceiver unit (90). The control device (70) according to the invention comprises at least one microcontroller (80 84) and a digital interface wherein the digital interface comprises a transceiver unit (90) and at least one interface controller (130 132 134 250 252 254) wherein the control device (70) is configured electively for a first mode wherein the at least one interface controller (130 132 134 250 252 254) communicates with the microcontroller (80 84) via an interface or for a second mode wherein the at least one interface controller (130 132 134 250 252 254) is integrated in the microcontroller (80 84).

No. of Pages : 14 No. of Claims : 10

(12) PATENT APPLICATION PUBLICATION
(19) INDIA
(22) Date of filing of Application :01/10/2013
(21) Application No.8547/DELNP/2013 A
(43) Publication Date : 19/12/2014

(54) Title of the invention : ENGAGEMENT CHAIN UNIT

(51) International classification :F16H19/02,F16G13/20
(31) Priority Document No :2011094434
(32) Priority Date :20/04/2011
(33) Name of priority country :Japan
(86) International Application No :PCT/JP2012/056703
Filing Date :15/03/2012
(87) International Publication No :WO 2012/144281
(61) Patent of Addition to Application Number :NA
Filing Date :NA
(62) Divisional to Application Number :NA
Filing Date :NA

(71)**Name of Applicant :**
1)TSUBAKIMOTO CHAIN CO.
Address of Applicant :3 3Nakanoshima 3 chome Kita ku Osaka shi Osaka 5300005 Japan
(72)**Name of Inventor :**
1)SAJI Tomoyuki
2)MURAKAMI Keisuke

(57) Abstract :
Provided is an engagement chain unit configured so that chains reliably and firmly engage with each other and that the buckling and twisting of a rigidified chain portion are avoided. An engagement chain unit (100) is configured in such a manner that the outer edges of a plate overlap region (P) are defined by contact portion surfaces (111aa 111aa) and flat buckling restricting end surfaces (112b 112b) and that the plate overlap region (P) is constructed from the outlines of two plate overlap portions (Pa Pa) which are point symmetric about the point (C) of intersection between hook shaped engagement end surfaces (111a 111a) and the buckling restricting end surfaces (112b 112b).

No. of Pages : 29 No. of Claims : 3

(12) PATENT APPLICATION PUBLICATION
(19) INDIA
(22) Date of filing of Application :01/10/2013
(21) Application No.8549/DELNP/2013 A
(43) Publication Date : 19/12/2014

(54) Title of the invention : METHOD AND DEVICE FOR PROCESSING UPLINK CONTROL DATA IN A WIRELESS NETWORK

(51) International classification :H04W72/04
(31) Priority Document No :NA
(32) Priority Date :NA
(33) Name of priority country :NA
(86) International Application No :PCT/EP2011/056867
Filing Date :29/04/2011
(87) International Publication No :WO 2012/146307
(61) Patent of Addition to Application Number :NA
Filing Date :NA
(62) Divisional to Application Number :NA
Filing Date :NA

(71)**Name of Applicant :**
1)NOKIA SIEMENS NETWORKS OY
Address of Applicant :Karaportti 3 FIN 02610 Espoo Finland
(72)**Name of Inventor :**
1)TIIROLA Esa Tapani
2)LUNTTILA Timo Erkki
3)HOOLI Kari Juhani
4)PAJUKOSKI Kari Pekka

(57) Abstract :
A method for processing data in a wireless communication network is provided wherein at least two resource pools for an uplink control channel are provided for mobile terminals for a geographical area and wherein the mobile terminals in the geographical area uses at least one of the at least two resource pools for the uplink control channel. In addition a corresponding device and system are suggested.

No. of Pages : 28 No. of Claims : 18

(12) PATENT APPLICATION PUBLICATION
(19) INDIA
(22) Date of filing of Application :04/10/2013
(21) Application No.8631/DELNP/2013 A
(43) Publication Date : 19/12/2014

(54) Title of the invention : METHOD AND APPARATUS FOR CREATING AND MODIFYING GRAPHICAL SCHEDULES

(51) International classification :H04L12/28,G06F3/048
(31) Priority Document No :13/081183
(32) Priority Date :06/04/2011
(33) Name of priority country :U.S.A.
(86) International Application No :PCT/US2012/000191
Filing Date :05/04/2012
(87) International Publication No :WO 2012/138401
(61) Patent of Addition to Application Number :NA
Filing Date :NA
(62) Divisional to Application Number :NA
Filing Date :NA

(71)**Name of Applicant :**
1)SAVANT SYSTEMS LLC
Address of Applicant :45 Perseverance Way Hyannis MA 02601 U.S.A.
(72)**Name of Inventor :**
1)CIPOLLO Nicholas J.
2)SILVA Michael C.
3)LOCASCIO Timothy R.
4)MADONNA Robert P.

(57) Abstract :
In one embodiment a graphical user interface displays a graphical schedule the graphical schedule indicating a relationship between time and at least one user selected condition to be satisfied at least one user selected action to be taken or at least one pre set that represents a user selected environmental state for a predetermined physical space. The graphical schedule is modified based on graphical manipulations from a user. The graphical schedule is provided to a programmable multimedia controller. The programmable multimedia controller is used to control the at least one device in accordance with the graphical schedule.

No. of Pages : 34 No. of Claims : 20

(12) PATENT APPLICATION PUBLICATION
(19) INDIA
(22) Date of filing of Application :04/10/2013
(21) Application No.8632/DELNP/2013 A
(43) Publication Date : 19/12/2014

(54) Title of the invention : MULTIFUNCTIONAL PRIMARY AMINE PROCESS FOR ITS PREPARATION AND USE THEREOF

(51) International classification :C08G59/18
(31) Priority Document No :11165022.2
(32) Priority Date :05/05/2011
(33) Name of priority country :EPO
(86) International Application No :PCT/EP2012/058172
Filing Date :03/05/2012
(87) International Publication No :WO 2012/150312
(61) Patent of Addition to Application Number :NA
Filing Date :NA
(62) Divisional to Application Number :NA
Filing Date :NA

(71)**Name of Applicant :**
1)ALLNEX AUSTRIA GMBH
Address of Applicant :Bundesstrasse 175 A 8402 Werndorf Austria
(72)**Name of Inventor :**
1)LUNZER Florian Dr.
2)SCHIPFER Rudolf
3)MONSCHEIN G¼nther
4)MEISNER Ursula
5)KERNBICHLER Albine

(57) Abstract :
The invention relates to a hydrophilically modified multifunctional amine AC which has more than one primary amino group per molecule and at least one group per molecule derived from the reaction of an epoxide group with a reactive group selected from the group consisting of secondary amino groups >NH hydroxyl groups OH mercaptan groups SH amide groups CO NHR where R can be hydrogen or an alkyl group having from one to twelve carbon atoms hydroxyester groups and acid groups particularly carboxyl groups COOH sulphonic acid groups SOH and phosphonic acid groups POH and preferably also moieties which are compatible with an epoxy resin as well as a process for its preparation and a method of use thereof.

No. of Pages : 29 No. of Claims : 15

(12) PATENT APPLICATION PUBLICATION
(19) INDIA
(22) Date of filing of Application :04/10/2013
(21) Application No.8633/DELNP/2013 A
(43) Publication Date : 19/12/2014

(54) Title of the invention : DRIVE DEVICE FOR ELECTRIC VEHICLE

(51) International classification :H02K5/15
(31) Priority Document No :2011049188
(32) Priority Date :07/03/2011
(33) Name of priority country :Japan
(86) International Application No :PCT/JP2011/055396
Filing Date :08/03/2011
(87) International Publication No :WO 2012/120648
(61) Patent of Addition to Application Number :NA
Filing Date :NA
(62) Divisional to Application Number :NA
Filing Date :NA

(71)**Name of Applicant :**
1)NTN CORPORATION
Address of Applicant :3 17 Kyomachibori 1 chome Nishi ku Osaka shi Osaka 5500003 Japan
(72)**Name of Inventor :**
1)SUZUKI Minoru
2)ISHIKAWA Aiko
3)MAKINO Tomoaki

(57) Abstract :
The objective of the present invention is to make it possible to prevent the lubricating oil of a speed reduction unit from moving toward an electric motor and to also prevent an offset load from being applied to bearings that support an input shaft. A drive device for an electric vehicle comprises: a speed reduction unit (12) including an input shaft (13) that is driven by the output of an electric motor (11); a hub unit (15) that is rotated and driven by an output member (14) of the speed reduction unit (12); and a housing (16) that houses the electric motor (11) and the speed reduction unit (12). The drive device is constructed such that: the housing (16) is provided with a partitioning wall (24) that divides respective spaces for housing the electric motor (11) and the speed reduction unit (12); and an oil seal member (36) is interposed between the peripheral edge of a center hole formed in the partitioning wall (24) and a rotor support member (31) of the electric motor (11).

No. of Pages : 44 No. of Claims : 12

(12) PATENT APPLICATION PUBLICATION
(19) INDIA
(22) Date of filing of Application :18/09/2013
(21) Application No.8176/DELNP/2013 A
(43) Publication Date : 19/12/2014

(54) Title of the invention : SOLID PREPARATION

(51) International classification :A61K9/20,A61K31/4188
(31) Priority Document No :2011082301
(32) Priority Date :01/04/2011
(33) Name of priority country :Japan
(86) International Application No :PCT/JP2012/059276
Filing Date :29/03/2012
(87) International Publication No :WO 2012/133918
(61) Patent of Addition to Application Number :NA
Filing Date :NA
(62) Divisional to Application Number :NA
Filing Date :NA

(71)**Name of Applicant :**
1)TAKEDA PHARMACEUTICAL COMPANY LIMITED
Address of Applicant :1 1 Doshomachi 4 chome Chuo ku Osaka shi Osaka 5410045 Japan
(72)**Name of Inventor :**
1)HOSHINA Wataru
2)MISAKI Masafumi

(57) Abstract :
The present invention provides a solid preparation wherein variation in weight is suppressed a solid preparation wherein the active ingredient is stabilized and a stabilization method thereof. A solid preparation containing (1) an active ingredient (2) D mannitol and (3) an alkaline earth metal salt selected from magnesium aluminometasilicate and calcium silicate. A method of stabilizing the. active ingredient including adding an alkaline earth metal salt selected from magnesium aluminometasilicate and calcium silicate.

No. of Pages : 41 No. of Claims : 8

(12) PATENT APPLICATION PUBLICATION
(19) INDIA
(22) Date of filing of Application :18/09/2013
(21) Application No.8177/DELNP/2013 A
(43) Publication Date : 19/12/2014

(54) Title of the invention : PLANETARY GEAR SYSTEM

(51) International classification :F16H57/08
(31) Priority Document No :10 2011 102 731.2
(32) Priority Date :20/05/2011
(33) Name of priority country :Germany
(86) International Application No :PCT/EP2012/002011
Filing Date :10/05/2012
(87) International Publication No :WO 2012/159711
(61) Patent of Addition to Application Number :NA
Filing Date :NA
(62) Divisional to Application Number :NA
Filing Date :NA

(71)**Name of Applicant :**
1)IMS GEAR GMBH
Address of Applicant :Heinrich Hertz Str. 16 78166 Donaueschingen Germany
(72)**Name of Inventor :**
1)HAGEDORN Heinz Gert

(57) Abstract :
The invention relates to a planetary gear system having at least one planet carrier (1) which comprises a planet carrier plate (5) which is produced from plastic in one piece together with at least one bearing pin (2) for a planetary gear (4) and which, on the output side, is rotationally fixedly connected to a sun gear (6). According to the invention, a thrust collar (7) that is connected to the planet carrier plate (5) in one piece is provided between the planetary gear (4) and the planet carrier plate (5) of the planet carrier (1).

No. of Pages : 13 No. of Claims : 10

(12) PATENT APPLICATION PUBLICATION
(19) INDIA
(22) Date of filing of Application :18/09/2013
(21) Application No.8178/DELNP/2013 A
(43) Publication Date : 19/12/2014

(54) Title of the invention : METHODS OF MAKING ABSORBENT MEMBERS HAVING SKEWED DENSITY PROFILE

(51) International classification :A61F13/533,A61F13/534,A61F13/536
(31) Priority Document No :13/094310
(32) Priority Date :26/04/2011
(33) Name of priority country :U.S.A.
(86) International Application No :PCT/US2012/034927
Filing Date :25/04/2012
(87) International Publication No :WO 2012/148973
(61) Patent of Addition to Application Number :NA
Filing Date :NA
(62) Divisional to Application Number :NA
Filing Date :NA

(71)**Name of Applicant :**
1)THE PROCTER & GAMBLE COMPANY
Address of Applicant :One Procter & Gamble Plaza Cincinnati Ohio 45202 U.S.A.
(72)**Name of Inventor :**
1)ORR Jill Marlene
2)MARINELLI Luigi
3)PRIESSMAN Keith Robert
4)STRUBE John Brian
5)CIMINI Carmine
6)DI PILLA Mario

(57) Abstract :
Absorbent members and methods of making the same are disclosed. In one embodiment the absorbent member is a unitary absorbent fibrous web having a density profile through its thickness. In one embodiment the density profile of the fibrous web is skewed toward one of the surfaces of the fibrous web. In such embodiments the maximum density of the web may be located outside of the central 30% zone of the thickness of the web. In one embodiment the method involves subjecting a precursor web to at least one cycle (or pass) through a mechanical deformation process. Typically the method involves subjecting the precursor web to multiples cycles (or passes) through a mechanical deformation process.

No. of Pages : 81 No. of Claims : 12

(12) PATENT APPLICATION PUBLICATION
(19) INDIA
(22) Date of filing of Application :04/10/2013
(21) Application No.8640/DELNP/2013 A
(43) Publication Date : 19/12/2014

(54) Title of the invention : DISCONTINUOUS RECEPTION FOR CARRIER AGGREGATION

(51) International classification :H04L5/00,H04W76/04
(31) Priority Document No :NA
(32) Priority Date :NA
(33) Name of priority country :NA
(86) International Application No :PCT/EP2011/063952
Filing Date :12/08/2011
(87) International Publication No :WO 2013/023677
(61) Patent of Addition to Application Number :NA
Filing Date :NA
(62) Divisional to Application Number :NA
Filing Date :NA

(71)**Name of Applicant :**
1)NOKIA SIEMENS NETWORKS OY
Address of Applicant :Karaportti 3 FIN 02610 Espoo Finland
(72)**Name of Inventor :**
1)WU Chunli
2)SEBIRE Benoist Pierre

(57) Abstract :
Methods and apparatuses for carrier aggregation with discontinuous reception is disclosed. At least two different time division duplexing configurations can be communicated from serving cells to a device the subframes of the at least two different configurations being counted for purposes of operating at least one timer function according to a predefined rule of counting. Discontinuous communications by the serving cells with the device are controlled based on the predefined rule of counting such that at least one timer function associated with discontinuous reception from the serving cells is operated based on the counting.

No. of Pages : 22 No. of Claims : 24

(12) PATENT APPLICATION PUBLICATION
(19) INDIA
(22) Date of filing of Application :04/10/2013
(21) Application No.8641/DELNP/2013 A
(43) Publication Date : 19/12/2014

(54) Title of the invention : ACTUATOR OPTICAL SCANNER AND IMAGE GENERATOR

(51) International classification :H02K33/00,B81B3/00,G02B26/10
(31) Priority Document No :2011066803
(32) Priority Date :24/03/2011
(33) Name of priority country :Japan
(86) International Application No :PCT/JP2012/001941
Filing Date :21/03/2012
(87) International Publication No :WO 2012/127858
(61) Patent of Addition to Application Number :NA
Filing Date :NA
(62) Divisional to Application Number :NA
Filing Date :NA

(71)**Name of Applicant :**
1)SEIKO EPSON CORPORATION
Address of Applicant :4 1 Nishi shinjuku 2 chome Shinjuku ku Tokyo 1630811 Japan
(72)**Name of Inventor :**
1)HINO Makiko
2)MIZOGUCHI Yasushi

(57) Abstract :
The present invention provides an actuator comprising: a mobile part which can vibrate around a vibratory shaft; a linking part which extends from the mobile part and deforms by twisting in accordance with the vibration of the mobile part; and a support part for supporting the linking part. The mobile part has a cross shape when viewed from the thickness direction of the mobile part.

No. of Pages : 86 No. of Claims : 14

(12) PATENT APPLICATION PUBLICATION
(19) INDIA
(22) Date of filing of Application :30/09/2013
(21) Application No.8506/DELNP/2013 A
(43) Publication Date : 19/12/2014

(54) Title of the invention : COMPOSITIONS AND METHODS FOR CONTROLLING PESTICIDE RESISTANT PESTS

(51) International classification :A01N25/22,A01N43/40,A01N47/40
(31) Priority Document No :1104156.3
(32) Priority Date :11/03/2011
(33) Name of priority country :U.K.
(86) International Application No :PCT/GB2012/050500
Filing Date :07/03/2012
(87) International Publication No :WO 2012/123714
(61) Patent of Addition to Application Number :NA
Filing Date :NA
(62) Divisional to Application Number :NA
Filing Date :NA

(71)**Name of Applicant :**
1)ROTHAMSTED RESEARCH LIMITED
Address of Applicant :Harpenden Hertfordshire AL5 2JQ U.K.
2)ENDURA S.P.A.
(72)**Name of Inventor :**
1)MOORES Graham David
2)PHILIPPOU Despina
3)BORZATTA Valerio
4)CAPPARELLA Elisa

(57) Abstract :
Provided are compositions comprising (i) a neonicotinoid; and (ii) a compound of formula (I) or (II) preferably wherein the composition is a pesticide composition for example an insecticide composition. Also provided is use of a compound of formula (I) or (II) as a neonicotinoid synergist and use of a compound of formula (I) or (II) in combination with a neonicotinoid. Further provided are methods for controlling pests.

No. of Pages : 22 No. of Claims : 15

(12) PATENT APPLICATION PUBLICATION
(19) INDIA
(22) Date of filing of Application :30/09/2013
(21) Application No.8507/DELNP/2013 A
(43) Publication Date : 19/12/2014

(54) Title of the invention : DERIVATIVE OF THE LACTOBACILUS JOHNSONII STRAIN CNCM I 1225 DEFICIENT IN D LACTIC ACID PRODUCTION AND WITH AN IMPROVED SHELF LIFE

(51) International classification :C12N9/04,A23C9/123,A61K38/44
(31) Priority Document No :11160140.7
(32) Priority Date :29/03/2011
(33) Name of priority country :EPO
(86) International Application No :PCT/EP2012/055673
Filing Date :29/03/2012
(87) International Publication No :WO 2012/130966
(61) Patent of Addition to Application Number :NA
Filing Date :NA
(62) Divisional to Application Number :NA
Filing Date :NA

(71)**Name of Applicant :**
1)NESTEC S.A.
Address of Applicant :Avenue Nestl 55 CH 1800 Vevey Switzerland
(72)**Name of Inventor :**
1)PRIDMORE Raymond David
2)FOATA Francis
3)DELLEY Mich¨le
4)JANKOVIC Ivana

(57) Abstract :
The present invention generally relates to the field of probiotic bacteria. I n particular the present invention relates to natural derivatives of the Lactobacillus johnsonii strain CNCM I 1225 with im proved properties. For example the present invention relates to a natural derivative of the Lactobacillus johnsonii strain CNCM I 1225 that is deficient in D lactic acid production and exhibits an improved viability during product storage.

No. of Pages : 39 No. of Claims : 15

(12) PATENT APPLICATION PUBLICATION
(19) INDIA
(22) Date of filing of Application :30/09/2013
(21) Application No.8508/DELNP/2013 A
(43) Publication Date : 19/12/2014

(54) Title of the invention : METHODS AND COMPOSITIONS SUITABLE FOR PRESERVING THE FRESHNESS OF LOAF TYPE FOOD PRODUCTS

(51) International classification :A21D4/00
(31) Priority Document No :61/516145
(32) Priority Date :29/03/2011
(33) Name of priority country :U.S.A.
(86) International Application No :PCT/US2012/029249
Filing Date :15/03/2012
(87) International Publication No :WO 2012/134825
(61) Patent of Addition to Application Number :NA
Filing Date :NA
(62) Divisional to Application Number :NA
Filing Date :NA

(71)**Name of Applicant :**
1)NESTEC S.A.
Address of Applicant :Avenue Nestle 55 CH 1800 Vevey Switzerland
(72)**Name of Inventor :**
1)RAYNER Jean Luz
2)RAYNER Michael G.

(57) Abstract :
The invention provides methods and compositions suitable for maintaining the freshness of loaf type food products in a sauce or gel of suitable viscosity for an extended period. When the loaf type food products are emptied from a container the sauce or gel covers the exposed surfaces of the loaf type food products and does not drip off or dry out. After more than six hours the loaf type food products still retain their original color and fresh wet appearance without any crust formation. Accordingly the invention solves the problems associated with the rapid crusting/drying color change off odor staleness and reduced visual appeal of the loaf type food products after they have been exposed to air for long time periods.

No. of Pages : 24 No. of Claims : 64

(12) PATENT APPLICATION PUBLICATION
(19) INDIA
(22) Date of filing of Application :30/09/2013
(21) Application No.8509/DELNP/2013 A
(43) Publication Date : 19/12/2014

(54) Title of the invention : NATURAL DERIVATIVE OF THE *LACTOBACILUS JOHNSONII* STRAIN CNCM I 1225 DEFICIENT IN D LACTIC ACID PRODUCTION AND WITH A FURTHER IMPROVED IMMUNE PROFILE

(51) International classification :C12N9/04,C12R1/225,C12P7/56
(31) Priority Document No :11160144.9
(32) Priority Date :29/03/2011
(33) Name of priority country :EPO
(86) International Application No :PCT/EP2012/055675
Filing Date :29/03/2012
(87) International Publication No :WO 2012/130968
(61) Patent of Addition to Application Number :NA
Filing Date :NA
(62) Divisional to Application Number :NA
Filing Date :NA

(71)**Name of Applicant :**
1)NESTEC S.A.
Address of Applicant :Avenue Nestl 55 CH 1800 Vevey Switzerland
(72)**Name of Inventor :**
1)PRIDMORE Raymond David
2)FOATA Francis
3)DELLEY Mich¨le
4)JANKOVIC Ivana

(57) Abstract :
LactobacillusjohnsoniiLactobacillus johnsoniiThe present invention generally relates to the field of probiotic bacteria. In particular the present invention relates to natural derivatives of the strain CNCM I 1225 with improved properties. For example the present invention relates to a natural derivative of the strain CNCM I 1225 that is deficient in D lactic acid production and exhibits a further improved immune profile.

No. of Pages : 41 No. of Claims : 15

(12) PATENT APPLICATION PUBLICATION
(19) INDIA
(22) Date of filing of Application :04/10/2013

(21) Application No.8646/DELNP/2013 A
(43) Publication Date : 19/12/2014

(54) Title of the invention : USE OF A HYPOALLERGENIC CEREAL COMPOSITION FOR INCLUDING SPECIFIC ORAL TOLERANCE

(51) International classification	:A61K36/899,A61K38/11,A61P37/08	
(31) Priority Document No	:11161239.6	
(32) Priority Date	:05/04/2011	
(33) Name of priority country	:EPO	
(86) International Application No	:PCT/EP2012/055551	
Filing Date	:28/03/2012	
(87) International Publication No	:WO 2012/136543	
(61) Patent of Addition to Application Number	:NA	
Filing Date	:NA	
(62) Divisional to Application Number	:NA	
Filing Date	:NA	

(71)**Name of Applicant :**
1)NESTEC S.A.
Address of Applicant :Av. Nestl 55 CH 1800 Vevey Switzerland
(72)**Name of Inventor :**
1)MERCENIER Annick
2)ORTEGA Graldine

(57) Abstract :
A partial hydrolysate of cereal protein for use in inducing specific oral tolerance in a young mammal with allergy to said cereal protein wherein the hydrolysate has a degree of hydrolysis between 9 and 18% is disclosed.

No. of Pages : 32 No. of Claims : 14

(12) PATENT APPLICATION PUBLICATION
(19) INDIA
(22) Date of filing of Application :04/10/2013
(21) Application No.8647/DELNP/2013 A
(43) Publication Date : 19/12/2014

(54) Title of the invention : SET OF MODULAR BEVERAGE PREPARATION MACHINES AND PROCESSES FOR CONFIGURING AND MANUFACTURING THE MACHINES

(51) International classification :A47J31/40,A47J31/44
(31) Priority Document No :11161213.1
(32) Priority Date :05/04/2011
(33) Name of priority country :EPO
(86) International Application No :PCT/EP2012/056045
Filing Date :03/04/2012
(87) International Publication No :WO 2012/136643
(61) Patent of Addition to Application Number :NA
Filing Date :NA
(62) Divisional to Application Number :NA
Filing Date :NA

(71)**Name of Applicant :**
1)NESTEC S.A.
Address of Applicant :Av. Nestl 55 CH 1800 Vevey Switzerland
(72)**Name of Inventor :**
1)REUST Alexis
2)MURPHY Richard Luke
3)BRUNNER Yann

(57) Abstract :
The invention concerns a set of differing beverage production machines the machines comprising : one core unit comprising at least a diluent supply system and one food ingredient storing module said storing module being selected in a plurality of different alternative modules for storing the food ingredient and/or one food ingredient dosing module said dosing module being selected in a plurality of different alternative modules for dosing the food ingredient and/or one food ingredient processing module said processing module being selected in a plurality of different alternative modules for processing the food ingredient.

No. of Pages : 22 No. of Claims : 29

(12) PATENT APPLICATION PUBLICATION
(19) INDIA
(22) Date of filing of Application :04/10/2013
(21) Application No.8625/DELNP/2013 A
(43) Publication Date : 19/12/2014

(54) Title of the invention : BONE PUTTY

(51) International classification :A61L24/00
(31) Priority Document No :1105621.5
(32) Priority Date :04/04/2011
(33) Name of priority country :U.K.
(86) International Application No :PCT/US2012/032066
Filing Date :04/04/2012
(87) International Publication No :WO 2013/165333
(61) Patent of Addition to Application Number :NA
Filing Date :NA
(62) Divisional to Application Number :NA
Filing Date :NA

(71)**Name of Applicant :**
1)SMITH & NEPHEW INC.
Address of Applicant :1450 East Brooks Road Memphis TN 38116 1892 U.S.A.
(72)**Name of Inventor :**
1)FARRAR David Franklin
2)MACAULEY Nicola Jayne
3)ROSE John

(57) Abstract :
The present invention relates to a macroporous material for filling bone voids. In particular, we describe an implant material comprising bioresorbable polymer granules and a biocompatible water-miscible solvent, wherein the solvent at least partially dissolves and/or softens the polymer granules to form a mouldabie mass that can be used to fill a bone defect but hardens when water is added and/or the implant material is placed in an aqueous environment, and wherein the implant material has macroporosity suitable for bone in-growth.

No. of Pages : 52 No. of Claims : 23

(12) PATENT APPLICATION PUBLICATION
(19) INDIA
(22) Date of filing of Application :04/10/2013
(21) Application No.8627/DELNP/2013 A
(43) Publication Date : 19/12/2014

(54) Title of the invention : ALL OPTICAL HYDROPHONE THAT IS NOT SENSITIVE TO TEMPERATURE OR STATIC PRESSURE

(51) International classification :G01H9/00,G01V1/18
(31) Priority Document No :1101165
(32) Priority Date :14/04/2011
(33) Name of priority country :France
(86) International Application No :PCT/EP2012/056740
Filing Date :13/04/2012
(87) International Publication No :WO 2012/140179
(61) Patent of Addition to Application Number :NA
Filing Date :NA
(62) Divisional to Application Number :NA
Filing Date :NA

(71)**Name of Applicant :**
1)THALES
Address of Applicant :45 rue de Villiers F 92200 Neuilly Sur Seine France
(72)**Name of Inventor :**
1)DOISY Martine
2)LAUNAY Fran§ois Xavier
3)LARDAT Rapha«l
4)ROUX Grard

(57) Abstract :
The invention consists of: an optical hydrophone; and a fiber optic element which forms a laser cavity and is housed inside a mechanical structure comprising an open rigid cylindrical body that defines a cavity containing a fluid in which cavity the fiber optic element is housed said rigid body being sealed at the ends thereof by means of two stoppers that keep the fiber optic element permanently under tension in a longitudinal rectilinear position inside the cavity. The stoppers are configured such as to: deform when the external pressure varies thereby varying the length of the fiber optic element; and deform when the temperature varies thereby varying the length of the fiber optic element and compensating for the variation experienced by the element as a result of the temperature variation. The mechanical structure also includes one or more openings that allow the static pressures to be balanced.

No. of Pages : 39 No. of Claims : 17

(12) PATENT APPLICATION PUBLICATION
(19) INDIA
(22) Date of filing of Application :04/10/2013
(21) Application No.8628/DELNP/2013 A
(43) Publication Date : 19/12/2014

(54) Title of the invention : METHOD AND DEVICE FOR THE SUCCESSIVE LAUNCHING OF TWO SATELLITES

(51) International classification :B64G1/64
(31) Priority Document No :1100706
(32) Priority Date :09/03/2011
(33) Name of priority country :France
(86) International Application No :PCT/FR2012/050460
Filing Date :06/03/2012
(87) International Publication No :WO 2012/120232
(61) Patent of Addition to Application Number :NA
Filing Date :NA
(62) Divisional to Application Number :NA
Filing Date :NA

(71)**Name of Applicant :**
1)ASTRIUM SAS
Address of Applicant :12 rue Pasteur F 92150 Suresnes France
(72)**Name of Inventor :**
1)COMTESSE Patrick

(57) Abstract :
According to the invention a link is established between the fixed part (4A) and the removable part (4B) of an enclosure (4) in which the second satellite is previously enclosed said link being such that said removable part (4B) remains attached to said fixed part (4A) when said removable part (4B) initially in a first position for which said enclosure (4) is closed and encloses said second satellite lies in a second position for which said enclosure (4) is open and able to release said satellite.

No. of Pages : 15 No. of Claims : 7

(12) PATENT APPLICATION PUBLICATION
(19) INDIA
(22) Date of filing of Application :04/10/2013
(21) Application No.8629/DELNP/2013 A
(43) Publication Date : 19/12/2014

(54) Title of the invention : LONGITUDINALLY ADJUSTABLE VEHICLE SEAT

(51) International classification :B60N2/08
(31) Priority Document No :20 2011 102 248.3
(32) Priority Date :21/06/2011
(33) Name of priority country :Germany
(86) International Application No :PCT/EP2012/002190
Filing Date :23/05/2012
(87) International Publication No :WO 2012/175166
(61) Patent of Addition to Application Number :NA
Filing Date :NA
(62) Divisional to Application Number :NA
Filing Date :NA

(71)**Name of Applicant :**
1)KEIPER GMBH & CO. KG
Address of Applicant :Hertelsbrunnenring 2 67657 Kaiserslautern Germany
(72)**Name of Inventor :**
1)RUESS Georg
2)UTZINGER Karl

(57) Abstract :
The invention relates to a longitudinally adjustable vehicle seat (1) which on both sides has a first seat rail (2) fixed to the seat a second seat rail (3) which guides said first seat rail and is fixed to the vehicle structure a locking device (4) for releasably locking the seat longitudinal position by securing the first seat rail (2) in the second seat rail (3) and a lever (5) that can be pivoted about a pivot axis (S) and has two actuating ends (6) that interact with the locking devices (4). At least one of the actuating ends (6) is spanned by a sub region of a multifunctional part (8) which both forms a kick plate and also limits the movement of the actuating end (6) upward and therefore forms a safeguard against erroneous operation of the lever (5).

No. of Pages : 20 No. of Claims : 15

(12) PATENT APPLICATION PUBLICATION
(19) INDIA
(22) Date of filing of Application :04/10/2013
(21) Application No.8630/DELNP/2013 A
(43) Publication Date : 19/12/2014

(54) Title of the invention : ASSAY DEVICE HAVING RHOMBUS SHAPED PROJECTIONS

(51) International classification :G01N33/543
(31) Priority Document No :61/472237
(32) Priority Date :06/04/2011
(33) Name of priority country :U.S.A.
(86) International Application No :PCT/US2012/032084
Filing Date :04/04/2012
(87) International Publication No :WO 2012/138701
(61) Patent of Addition to Application Number :NA
Filing Date :NA
(62) Divisional to Application Number :NA
Filing Date :NA

(71)**Name of Applicant :**
1)ORTHO CLINICAL DIAGNOSTICS INC
Address of Applicant :1001 U.S. Route 202 Raritan NJ 08869 U.S.A.
(72)**Name of Inventor :**
1)DING Zhong
2)BERGMAN David

(57) Abstract :
An assay device includes: a liquid sample receiving zone; a capture zone in fluid communication with the sample receiving zone having capture elements bound thereto the capture zone having a substrate and projections which extend substantially vertically from the substrate the projections having a rhombus shaped cross section and the projections arranged on the substrate with the corners of the projections facing upstream in a direction toward the sample receiving zone. The projections have a height cross section and a distance between one another that defines a capillary space between the projections capable of generating capillary flow parallel to the substrate surface. The rhombus shaped cross section is a square the corners of the projections facing the upstream and downstream direction have a smaller interior angle compared to the other interior angles of the projections.

No. of Pages : 32 No. of Claims : 22

(12) PATENT APPLICATION PUBLICATION
(19) INDIA
(22) Date of filing of Application :04/10/2013
(21) Application No.8622/DELNP/2013 A
(43) Publication Date : 19/12/2014

(54) Title of the invention : ULTRASONIC FLOW METER HAVING CABLE SHROUD

(51) International classification :G01F1/66,G01F15/14,G01F15/00
(31) Priority Document No :61/470878
(32) Priority Date :01/04/2011
(33) Name of priority country :U.S.A.
(86) International Application No :PCT/US2012/030725
Filing Date :27/03/2012
(87) International Publication No :WO 2012/135206
(61) Patent of Addition to Application Number :NA
Filing Date :NA
(62) Divisional to Application Number :NA
Filing Date :NA

(71)**Name of Applicant :**
1)DANIEL MEASUREMENT AND CONTROL INC.
Address of Applicant :11100 Brittmoore Park Drive Houston Texas 77041 U.S.A.
(72)**Name of Inventor :**
1)ALLEN Charles Robert

(57) Abstract :
A flow meter is disclosed having a meter body that is enveloped by a compliant shroud that protects transducers and transducer cables. The shroud forms a chamber between the shroud and meter body and includes a releasable portion to allow access into the chamber.

No. of Pages : 29 No. of Claims : 28

(12) PATENT APPLICATION PUBLICATION
(19) INDIA
(22) Date of filing of Application :04/10/2013
(21) Application No.8623/DELNP/2013 A
(43) Publication Date : 19/12/2014

(54) Title of the invention : HEAT EXCHANGER TUBE AND CORRESPONDING HEAT EXCHANGER PRODUCTION METHOD

(51) International classification :F28D1/03
(31) Priority Document No :1152705
(32) Priority Date :31/03/2011
(33) Name of priority country :France
(86) International Application No :PCT/EP2012/055790
Filing Date :30/03/2012
(87) International Publication No :WO 2012/131038
(61) Patent of Addition to Application Number :NA
Filing Date :NA
(62) Divisional to Application Number :NA
Filing Date :NA

(71)**Name of Applicant :**
1)VALEO SYSTEMES THERMIQUES
Address of Applicant :8 rue Louis Lormand La Verri¨re F 78320 Le Mesnil Saint Denis France
(72)**Name of Inventor :**
1)ZANCHETTA Patrick
2)GARCIA Jean Jacques
3)BEIDELER Fran§ois

(57) Abstract :
The invention relates to a heat exchanger tube produced by folding a metal strip (11) characterized in that said strip (11) has a thickness that varies between at least one first thickness () and at least one second thickness () that is greater than said first thickness () and in that said tube has first thinner areas (Z1) and second reinforced areas (Z2) located at locations at which a high mechanical load is applied said first areas (Z1) consisting of first portions (P1) of said strip having a first thickness () and said reinforced second areas (Z2) consisting of second portions (P2) of said strip (11) having a second thickness (). The invention also relates to a heat exchanger including a bundle of such tubes as well as to a method for producing such a tube.

No. of Pages : 21 No. of Claims : 14

(12) PATENT APPLICATION PUBLICATION
(19) INDIA
(22) Date of filing of Application :04/10/2013
(21) Application No.8624/DELNP/2013 A
(43) Publication Date : 19/12/2014

(54) Title of the invention : DEVICE FOR THE INJECTION OF RECIRCULATED EXHAUST GASES DISTRIBUTION BOX AND SUPPLY MODULE COMPRISING SAID DEVICE

(51) International classification :F02M25/07,F02M35/104,F02B29/04
(31) Priority Document No :1152697
(32) Priority Date :31/03/2011
(33) Name of priority country :France
(86) International Application No :PCT/EP2012/052387
Filing Date :13/02/2012
(87) International Publication No :WO 2012/130513
(61) Patent of Addition to Application Number :NA
Filing Date :NA
(62) Divisional to Application Number :NA
Filing Date :NA

(71)**Name of Applicant :**
1)VALEO SYSTEMES THERMIQUES
Address of Applicant :8 rue Louis Lormand La Verri¨re F 78320 Le Mesnil Saint Denis France
(72)**Name of Inventor :**
1)DE PELSEMAEKER Georges
2)GALLAND Jean Pierre
3)ODILLARD Laurent

(57) Abstract :
The invention relates to a device for injecting the recirculated exhaust gases of a vehicle engine, in particular a diesel engine. The injection device comprises a plurality of injection ports (26. 1, 26.2, 26.3, 26.4) provided in a portion of the material of the injection device, each injection port (26. 1, 26.2, 26.3, 26.4) having a section and a height extending through the thickness of the material. According to the invention, the sections and/or heights of at least two injection ports (26.1, 26.2, 26.3, 26.4) are diffrent.

No. of Pages : 18 No. of Claims : 11

(12) PATENT APPLICATION PUBLICATION
(19) INDIA
(22) Date of filing of Application :04/10/2013
(21) Application No.8660/DELNP/2013 A
(43) Publication Date : 19/12/2014

(54) Title of the invention : METHOD AND APPARATUS FOR ADAPTING THE DATA TRANSMISSION SECURITY IN A SERIAL BUS SYSTEM

(51) International classification	:G06F13/42,H04L12/413,G06F11/00
(31) Priority Document No	:10 2011 006 875.9
(32) Priority Date	:06/04/2011
(33) Name of priority country	:Germany
(86) International Application No	:PCT/EP2012/055574
Filing Date	:29/03/2012
(87) International Publication No	:WO 2012/136545
(61) Patent of Addition to Application Number	:NA
Filing Date	:NA
(62) Divisional to Application Number	:NA
Filing Date	:NA

(71)**Name of Applicant :**
1)ROBERT BOSCH GMBH
Address of Applicant :Postfach 30 02 20 70442 Stuttgart Germany
(72)**Name of Inventor :**
1)HARTWICH Florian

(57) Abstract :
The invention describes a method for serially transmitting data in a bus system having at least two participating data processing units wherein the data processing units interchange messages via the bus wherein the transmitted messages have a logical structure according to the CAN standard ISO 11898 1 wherein the logical structure comprises a start of frame bit an arbitration field a control field a data field a CRC field an acknowledge field and an end of frame sequence wherein the control field comprises a data length code containing an item of information relating to the length of the data field. The CRC field of the messages may have at least two different numbers of bits depending on the value of an associated changeover condition (UB3).

No. of Pages : 32 No. of Claims : 28

(12) PATENT APPLICATION PUBLICATION
(19) INDIA
(22) Date of filing of Application :04/10/2013
(21) Application No.8661/DELNP/2013 A
(43) Publication Date : 19/12/2014

(54) Title of the invention : METHOD AND APPARATUS FOR ADAPTING THE DATA TRANSMISSION SECURITY IN A SERIAL BUS SYSTEM

(51) International classification	:G06F13/42,H04L12/413,G06F11/00
(31) Priority Document No	:10 2011 006 875.9
(32) Priority Date	:06/04/2011
(33) Name of priority country	:Germany
(86) International Application No	:PCT/EP2012/055579
Filing Date	:29/03/2012
(87) International Publication No	:WO 2012/136546
(61) Patent of Addition to Application Number	:NA
Filing Date	:NA
(62) Divisional to Application Number	:NA
Filing Date	:NA

(71)**Name of Applicant :**
1)ROBERT BOSCH GMBH
Address of Applicant :Postfach 30 02 20 70442 Stuttgart Germany
(72)**Name of Inventor :**
1)HARTWICH Florian

(57) Abstract :
The invention describes a method for serially transmitting data in a bus system having at least two participating data processing units wherein the data processing units interchange messages via the bus wherein the transmitted messages have a logical structure according to the CAN standard ISO 11898 1 wherein the logical structure comprises a start of frame bit an arbitration field a control field a data field a CRC field an acknowledge field and an end of frame sequence wherein the control field comprises a data length code containing an item of information relating to the length of the data field. The CRC field of the transmitted messages may have at least two different numbers of bits depending on the content of the data length code.

No. of Pages : 30 No. of Claims : 19

(12) PATENT APPLICATION PUBLICATION
(19) INDIA
(22) Date of filing of Application :04/10/2013
(21) Application No.8634/DELNP/2013 A
(43) Publication Date : 19/12/2014

(54) Title of the invention : A METHOD AND A SYSTEM FOR CONTROLLING DISCOMFORT LEVEL

(51) International classification :A61M5/172
(31) Priority Document No :61/466959
(32) Priority Date :24/03/2011
(33) Name of priority country :U.S.A.
(86) International Application No :PCT/SG2012/000090
Filing Date :19/03/2012
(87) International Publication No :WO 2012/128718
(61) Patent of Addition to Application Number :NA
Filing Date :NA
(62) Divisional to Application Number :NA
Filing Date :NA

(71)**Name of Applicant :**
1)SINGAPORE HEALTH SERVICES PTE LTD
Address of Applicant :31 Third Hospital Avenue #03 03 Bowyer Block C Singapore 168753 Singapore
(72)**Name of Inventor :**
1)SIA Tiong Heng Alex

(57) Abstract :
Present invention relates to a method of controlling the discomfort level experienced by a subject. The method comprises receiving a signal from the subject to initiate comfort relief determining vital sign data of the subject determining whether the vital sign data fulfils a predetermined criterion and performing an infusion regime of infusing a comfort relief drug into the subject based on whether the vital sign data fulfils the predetermined criterion.

No. of Pages : 38 No. of Claims : 24

(12) PATENT APPLICATION PUBLICATION
(19) INDIA
(22) Date of filing of Application :04/10/2013
(21) Application No.8635/DELNP/2013 A
(43) Publication Date : 19/12/2014

(54) Title of the invention : SYSTEM AND METHOD FOR MULTIPHASIC RELEASE OF GROWTH FACTORS

(51) International classification :A61K9/10,A61K38/18,A61K47/30
(31) Priority Document No :61/474049
(32) Priority Date :11/04/2011
(33) Name of priority country :U.S.A.
(86) International Application No :PCT/CA2012/050234
Filing Date :11/04/2012
(87) International Publication No :WO 2012/139223
(61) Patent of Addition to Application Number :NA
Filing Date :NA
(62) Divisional to Application Number :NA
Filing Date :NA

(71)**Name of Applicant :**
1)INDUCE BIOLOGICS INC.
Address of Applicant :180 Dundas St West Suite 1702 Toronto Ontario M5G 1Z8 Canada
(72)**Name of Inventor :**
1)CLOKIE Cameron M.L.
2)PEEL Sean A.F.

(57) Abstract :
A system for multiphasic delivery of at least one growth factor at a treatment site comprises a delivery vehicle for releasing at least one growth factor in an initial release profile and a carrier for releasing at least one growth factor in a sustained release profile. The initial release profile releases at least one growth factor over a period of hours to days wherein the growth factor is released in a large amount initially with the remainder being released in progressively lower amounts. The sustained release profile releases at least one growth factor over a period of days to weeks wherein the growth factor is released at a generally constant amount over such period. The system of the invention is particularly suited for applications on bioimplants. The invention also comprises methods and kits for multiphasic delivery of at least one growth factor.

No. of Pages : 38 No. of Claims : 45

(12) PATENT APPLICATION PUBLICATION
(19) INDIA
(22) Date of filing of Application :04/10/2013
(21) Application No.8636/DELNP/2013 A
(43) Publication Date : 19/12/2014

(54) Title of the invention : LIGANDS FOR G-PROTEIN COUPLED RECEPTORS

(51) International classification :C07D 453/06
(31) Priority Document No :0419517.8
(32) Priority Date :02/09/2004
(33) Name of priority country :U.K.
(86) International Application No :PCT/GB2005/003134
Filing Date :10/08/2005
(87) International Publication No :WO 2006/024815
(61) Patent of Addition to Application Number :NA
Filing Date :NA
(62) Divisional to Application Number :919/DELNP/2007
Filed on :02/02/2007

(71)**Name of Applicant :**
1)Cambridge Enterprise Limited
Address of Applicant :The Old Schools, Trinity Lane, Cambridge CB2 1TS (GB) U.K.
(72)**Name of Inventor :**
1)GRAINGER, David John
2)FOX, David John

(57) Abstract :
The invention relates to the generation of a library of compounds enriched in agonist and antagonists for members of the G-protein coupled class of receptors (GPCRs). The library contains compounds of general formula (I) wherein y is any integer from 1 to 8; z is one integer from 0 to 8 with the proviso that y and z cannot simultaneously be 1; X is -CO-(Y)k-(R1)n or SO2-(Y)k-(R1)n; k is 0 or 1; y is a cycloalkyl or polycyloalkyl group (such as an adamantyl, adamantanemethyl, bicyclooctyl, cyclohexyl, cyclopropyl group); or y is a cycloalkenyl or polycycloalkenyl group; each R1 is independently selected from hydrogen or an alkyl, haloalkyl, alkoxy, haloalkoxy, alkenyl, alkynyl, alkylamino, alkylaminoalkyl, alkylaminodialkyl, charged alkylaminotrialkyl or charged alkylcarboxylate radical of 1 to 20 carbon atoms; or each R1 is independently selected from fluoro, chloro, bromo, iodo, hydroxy, oxyalkyl, amino, aminoalkyl, aminodialkyl, charged aminotrialkyl, or carboxylate radical; and n is any integer from 1 to m, where m is the maximum number of substitutions permissible on the cyclo-group Y; or alternatively R1 may be selected from a peptido radical, for example having from 1 to 4 peptidic moieties linked together by peptide bonds (for example a peptido radical of 1 to 4 amino acid residues).

No. of Pages : 28 No. of Claims : 5

(12) PATENT APPLICATION PUBLICATION
(19) INDIA
(22) Date of filing of Application :04/10/2013
(21) Application No.8637/DELNP/2013 A
(43) Publication Date : 19/12/2014

(54) Title of the invention : ACCELERATOR FOR CURING RESINS

(51) International classification :C08K5/05,C08K5/16,C08K5/49
(31) Priority Document No :11159562.5
(32) Priority Date :24/03/2011
(33) Name of priority country :EPO
(86) International Application No:PCT/EP2012/054932
Filing Date :21/03/2012
(87) International Publication No :WO 2012/126918
(61) Patent of Addition to Application Number :NA
Filing Date :NA
(62) Divisional to Application Number :NA
Filing Date :NA

(71)**Name of Applicant :**
1)Akzo Nobel Chemicals International B.V.
Address of Applicant :Stationsstraat 77 NL 3811 MH Amersfoort Netherlands
(72)**Name of Inventor :**
1)KOERS Frederik Willem Karel

(57) Abstract :
Accelerator solution suitable for forming a redox system with peroxides comprising a Cu(l) compound a transition metal selected from cobalt and titanium a phosphorous containing compound a nitrogen containing base and a hydroxy functional solvent.

No. of Pages : 17 No. of Claims : 8

(12) PATENT APPLICATION PUBLICATION
(19) INDIA
(22) Date of filing of Application :04/10/2013
(21) Application No.8639/DELNP/2013 A
(43) Publication Date : 19/12/2014

(54) Title of the invention : METAL SEPARATION METHOD

(51) International classification :C22B3/44,C22B11/00,C22B26/12
(31) Priority Document No :A 297/2011
(32) Priority Date :04/03/2011
(33) Name of priority country :Austria
(86) International Application No :PCT/AT2012/050028
Filing Date :02/03/2012
(87) International Publication No :WO 2012/119174
(61) Patent of Addition to Application Number :NA
Filing Date :NA
(62) Divisional to Application Number :NA
Filing Date :NA

(71)**Name of Applicant :**
1)A.L.P. TECHNOLOGY AG
Address of Applicant :Dufourstrasse 42 CH 8008 Z¼rich Switzerland
(72)**Name of Inventor :**
1)PRIOR Joachim
2)PRIOR Adalbert

(57) Abstract :
The invention relates to a metal separation method comprising the following steps: introducing the metal to be separated together with a liquid into a reactor; adding process gas that reacts with the metal to be separated and blending same recovering the metal to be separated wherein the blending of the liquid and process gas is carried out after the surface gassing operation and the gas is introduced via at least one gas inlet above the maximum fill level of the reactor and is discharged via at least one gas outlet above the maximum fill level of the reactor; the liquid is introduced via at least one liquid inlet and is drained off via at least one liquid outlet the discharge preferably being effected via the base of the reactor; the liquid is stirred by a stirrer; wherein a homogeneous stirring in of the process gas is rendered possible by at least one flow disturbance means interacting with the stirrer.

No. of Pages : 36 No. of Claims : 24

(12) PATENT APPLICATION PUBLICATION
(19) INDIA
(22) Date of filing of Application :01/10/2013
(21) Application No.8561/DELNP/2013 A
(43) Publication Date : 19/12/2014

(54) Title of the invention : EXTERIOR AUTOMOTIVE ARTICLE WITH REDUCED PAINTABILITY FAILURE

(51) International classification :C08F10/06,C08L23/10
(31) Priority Document No :11156902.6
(32) Priority Date :04/03/2011
(33) Name of priority country :EPO
(86) International Application No :PCT/EP2012/053544
Filing Date :01/03/2012
(87) International Publication No :WO 2012/119921
(61) Patent of Addition to Application Number :NA
Filing Date :NA
(62) Divisional to Application Number :NA
Filing Date :NA

(71)**Name of Applicant :**
1)BOREALIS AG
Address of Applicant :IZD Tower Wagramerstr. 17 19 A 1220 Vienna Austria
(72)**Name of Inventor :**
1)TRANNINGER Michael
2)LEDERER Klaus

(57) Abstract :
Exterior automotive article comprising a composition comprising a polypropylene an elastomeric copolymer and a mineral filler wherein · said polypropylene (PP) has a comonomer content of equal or below 1.0 wt. % the comonomers are ethylene and/or at least one C to C a olefin and <2,1> erythro regiodefects of equal or more than 0.4 mol. % said elastomeric copolymer (EC) comprises units derived from ethylene and at least one C to C a olefin · said composition (C) has a melt flow rate MFR(230 °C) in the range of 5 to 80 g/lOmin.

No. of Pages : 43 No. of Claims : 15

(12) PATENT APPLICATION PUBLICATION
(19) INDIA
(22) Date of filing of Application :01/10/2013
(21) Application No.8563/DELNP/2013 A
(43) Publication Date : 19/12/2014

(54) Title of the invention : SUGAR AND PEG FUNCTIONALIZED POLYACETALS WITH CONTROLLED PH DEPENDENT DEGRADATION

(51) International classification :C08G2/30,C08G4/00,C08L59/00
(31) Priority Document No :11382097.1
(32) Priority Date :04/04/2011
(33) Name of priority country :EPO
(86) International Application No :PCT/EP2012/056034
Filing Date :03/04/2012
(87) International Publication No :WO 2012/136638
(61) Patent of Addition to Application Number :NA
Filing Date :NA
(62) Divisional to Application Number :NA
Filing Date :NA

(71)**Name of Applicant :**
1)ARGON PHARMA S.L.
Address of Applicant :C. Baldiri i Reixac 4 6 E 08028 Barcelona Spain
(72)**Name of Inventor :**
1)PE'A GULIN Oscar

(57) Abstract :
The present invention relates to degradable polyacetal polymers having a C(O) (CHCHO) R or a saccharide attached to amine radical of the backbone of the polymer their polymer active agent conjugates and their preparation processes to compositions and hydrogels containing them as well as their use in therapy diagnostic imaging and cosmetics.

No. of Pages : 72 No. of Claims : 20

(12) PATENT APPLICATION PUBLICATION
(19) INDIA
(22) Date of filing of Application :03/10/2013
(21) Application No.8564/DELNP/2013 A
(43) Publication Date : 19/12/2014

(54) Title of the invention : FLUID COOLED WIND TURBINE

(51) International classification :H02K1/27,F03D11/00,H02K1/32
(31) Priority Document No :MI2011A000376
(32) Priority Date :10/03/2011
(33) Name of priority country :Italy
(86) International Application No :PCT/IB2012/051134
Filing Date :10/03/2012
(87) International Publication No :WO 2012/120485
(61) Patent of Addition to Application Number :NA
Filing Date :NA
(62) Divisional to Application Number :NA
Filing Date :NA

(71)**Name of Applicant :**
1)WILIC S.AR.L.
Address of Applicant :1 Boulevard de la Foire L 1528 Luxembourg Luxembourg
(72)**Name of Inventor :**
1)CASAZZA Matteo
2)FOLIE Georg
3)GELMINI Emmanuele

(57) Abstract :
A fluid cooled wind turbine (1) has at least one electric machine (6; 206) in turn having a stator (8; 208) with a stator supporting structure (11; 211) and a plurality of active stator sectors (16) supported by the stator supporting structure (11; 211) and a rotor (7; 207) which rotates about an axis of rotation (A2) and has a rotor supporting structure (10; 210) and a plurality of active rotor sectors (15) supported by the rotor supporting structure (10; 210); and a cooling system (27; 127; 227) having a cooling circuit (28; 128; 128 228) extending partly along a plurality of through channels (9 19; 9 19 209 19) adjacent to at least the active rotor sectors (15) or the active stator sectors (16).

No. of Pages : 34 No. of Claims : 22

(12) PATENT APPLICATION PUBLICATION
(19) INDIA
(22) Date of filing of Application :03/10/2013
(21) Application No.8566/DELNP/2013 A
(43) Publication Date : 19/12/2014

(54) Title of the invention : SILICONE RELEASE COATING COMPOSITIONS

(51) International classification :C09D183/04,C09D125/04
(31) Priority Document No :61/454064
(32) Priority Date :18/03/2011
(33) Name of priority country :U.S.A.
(86) International Application No :PCT/US2012/027668
Filing Date :05/03/2012
(87) International Publication No :WO 2012/128919
(61) Patent of Addition to Application Number :NA
Filing Date :NA
(62) Divisional to Application Number :NA
Filing Date :NA

(71)**Name of Applicant :**
1)DOW CORNING CORPORATION
Address of Applicant :2200 West Salzburg Road Midland MI 48686 0994 U.S.A.
(72)**Name of Inventor :**
1)BRASSEUR Michael Joseph
2)DELOFFRE Emmanuelle
3)PAREIN Christian

(57) Abstract :
The present invention relates to a silicone release coating composition comprising; (I) a branched siloxane; (II) an organohydrogenpolysiloxane cross linking agent; (III) a hydro silylation catalyst; and (IV) a styrene/olefin latex.

No. of Pages : 24 No. of Claims : 15

(12) PATENT APPLICATION PUBLICATION
(19) INDIA
(22) Date of filing of Application :07/10/2013
(21) Application No.8674/DELNP/2013 A
(43) Publication Date : 19/12/2014

(54) Title of the invention : NARROW SURFACE COATING DEVICE AND METHOD FOR APPLYING A HEAT ACTIVATABLE EDGE COATING BY MEANS OF HOT AIR OR HOT GAS

(51) International classification :B29C63/00,B27D5/00
(31) Priority Document No :10 2011 015 898.7
(32) Priority Date :01/04/2011
(33) Name of priority country :Germany
(86) International Application No :PCT/DE2012/000360
Filing Date :31/03/2012
(87) International Publication No :WO 2012/130224
(61) Patent of Addition to Application Number :NA
Filing Date :NA
(62) Divisional to Application Number :NA
Filing Date :NA

(71)**Name of Applicant :**
1)SCHULTE G–BEL Christof
Address of Applicant :Graf Gottfried Str. 30 57392 Schmallenberg Germany
(72)**Name of Inventor :**
1)SCHULTE G–BEL Christof

(57) Abstract :
The invention relates to an edge coating device (1) for applying a ribbon shaped edge strip (4) to narrow surfaces (6) of a workpiece (5) wherein the edge strip (4) can be fastened by heat activation to the narrow surfaces (6) in particular in multiple layers without adhesive or with a hot melt adhesive layer between edge strip (4) and narrow surface (6). The device comprises at least one feed device (7) for the edge strip (4) and a pressing device (9) that presses the heat activated edge strip (4) against the narrow surface (6) of the workpiece (5). In the case of said edge coating device (1) and the corresponding coating method an outlet (10) for hot air (16) is arranged in the region of the feed device (7) and/or pressing device (9). The opening applies the hot air (16) under a pressure of one bar or more onto the edge strip (4) and/or onto the heat activatable layer of the edge strip (4) and/or onto the narrow surface (6) of the workpiece (5) wherein a heating device (3) is in fluidic connection for the hot air with the outlet (10). The heating device (3) brings the hot air (16) to the required activation temperature for the heat activatable layer of the edge strip (4) or the hot melt adhesive.

No. of Pages : 42 No. of Claims : 23

(12) PATENT APPLICATION PUBLICATION
(19) INDIA
(22) Date of filing of Application :04/10/2013
(21) Application No.8617/DELNP/2013 A
(43) Publication Date : 19/12/2014

(54) Title of the invention : RECOVERY FROM MULTIPLE FAULTS IN A COMMUNICATIONS NETWORK

(51) International classification :H04L12/24
(31) Priority Document No :NA
(32) Priority Date :NA
(33) Name of priority country :NA
(86) International Application No :PCT/EP2011/056452
Filing Date :21/04/2011
(87) International Publication No :WO 2012/143059
(61) Patent of Addition to Application Number :NA
Filing Date :NA
(62) Divisional to Application Number :NA
Filing Date :NA

(71)**Name of Applicant :**
1)TELEFONAKTIEBOLAGET L M ERICSSON (PUBL)
Address of Applicant :S 164 83 Stockholm Sweden
(72)**Name of Inventor :**
1)HASSETT Brendan

(57) Abstract :
A method (10) of recovery from multiple faults in a communications network comprising: a. receiving an alarm signal from each of a plurality of faults in the communications network each alarm signal comprising a respective alarm descriptor (12); b. for each alarm signal: i. analysing the respective alarm descriptor to identify a possible root cause of the alarm signal (16); ii. providing a root cause metric for the identified possible root cause the metric being indicative of a difficulty of repairing the respective fault (18); iii. determining a service impact caused to the communications network by the respective fault (20); iv. providing a service impact metric indicative of the service impact (22); v. combining the root cause metric and the service impact metric to generate an alarm metric (24); c. ranking the alarm signals in dependence on their respective alarm metrics (28); and d. causing the fault having the highest ranked alarm metric to be repaired first (30).

No. of Pages : 24 No. of Claims : 11

(12) PATENT APPLICATION PUBLICATION
(19) INDIA
(22) Date of filing of Application :04/10/2013
(21) Application No.8618/DELNP/2013 A
(43) Publication Date : 19/12/2014

(54) Title of the invention : COMPOSITION OF SUBSTANCES FOR ACTING UPON THE MICROBIAL TISSUE SYSTEM OF HUMAN INTESTINES PRODUCTION METHOD AND USES

(51) International classification :A23L1/30,A23L1/10,C12N1/16
(31) Priority Document No :2011109906
(32) Priority Date :17/03/2011
(33) Name of priority country :Russia
(86) International Application No :PCT/RU2012/000074
Filing Date :07/02/2012
(87) International Publication No :WO 2012/125073
(61) Patent of Addition to Application Number :NA
Filing Date :NA
(62) Divisional to Application Number :NA
Filing Date :NA

(71)**Name of Applicant :**
1)GRINEVICH Vladimir Borisovich
Address of Applicant :Komendantskiy pr. d. 16 korp. 1 kv. 136 St.Petersburg 197372 Russia
(72)**Name of Inventor :**
1)GRINEVICH Vladimir Borisovich

(57) Abstract :
The invention relates to the field of medicine biology disorder prophylaxis and human health maintenance. The invention is used in biotechnology and specifically in the production of human preventive drugs and in health improving institutions and also in medical institutions as an accompanying auxiliary drug for treating and accelerating rehabilitation processes for acute and chronic disorders complex surgical interventions and chemotherapy. The method for acting upon the microbial tissue system of human intestines consists in that the composition of substances a eubiotic system is used as a drug restoring the microbial tissue system of the intestines as a whole optimizing the functioning of said system neutralizing chronic systemic inflammation and an insulin resistant state normalizing the carbon lipid and protein types of substance exchange the water electrolyte vitamin and microelement balances the hormonal background and component composition of the human body and also removing harmful compounds from the organism by means of the action of the composition of substances on the microbial tissue system of human intestines.

No. of Pages : 105 No. of Claims : 6

(12) PATENT APPLICATION PUBLICATION
(19) INDIA
(22) Date of filing of Application :04/10/2013
(21) Application No.8619/DELNP/2013 A
(43) Publication Date : 19/12/2014

(54) Title of the invention : ORAL SUPPLEMENTATION FOR THE REVERSAL OF HUMAN HAIR CANITIES

(51) International classification :A61K8/66,A61K8/11,A61K8/23
(31) Priority Document No :2733836
(32) Priority Date :09/03/2011
(33) Name of priority country :Canada
(86) International Application No :PCT/IB2012/051072
Filing Date :07/03/2012
(87) International Publication No:WO 2012/120462
(61) Patent of Addition to Application Number :NA
Filing Date :NA
(62) Divisional to Application Number :NA
Filing Date :NA

(71)**Name of Applicant :**
1)COORE Garfield
Address of Applicant :29 Crown Acres Court Scarborough Ontario M1S 4W1 Canada
(72)**Name of Inventor :**
1)COORE Garfield

(57) Abstract :
While the scientific understanding of why we grey isstill in flux and many remediation methodologies have beenput forward. We are outlining in this application the novel use of specific compounds such as enzymes and essential amino acids taken as oral dietary supplement to slow, and/or stop, and/or reverse human greying.These compounds can be usedindividuallyor invaryingcombination. The compounds employed in this novel application are: - L-Methionine - Super Oxide Dismutase - Selenium - Glutathione Peroxidase - Pterostilbene - Catalase - Vitamin B12 - Folic Acid

No. of Pages : 9 No. of Claims : 19

(12) PATENT APPLICATION PUBLICATION
(19) INDIA
(22) Date of filing of Application :07/10/2013
(21) Application No.8680/DELNP/2013 A
(43) Publication Date : 19/12/2014

(54) Title of the invention : NANO DISPERSIONS OF CARBONACEOUS MATERIAL IN WATER AS THE BASIS OF FUEL RELATED TECHNOLOGIES AND METHODS OF MAKING SAME

(51) International classification :C08L95/00,C10L1/32
(31) Priority Document No :61/473017
(32) Priority Date :07/04/2011
(33) Name of priority country :U.S.A.
(86) International Application No :PCT/IB2012/000950
Filing Date :06/04/2012
(87) International Publication No :WO 2012/137081
(61) Patent of Addition to Application Number :NA
Filing Date :NA
(62) Divisional to Application Number :NA
Filing Date :NA

(71)**Name of Applicant :**
1)NANO DISPERSIONS TECHNOLOGY INC.
Address of Applicant :Calle Ovidio Saldana Building 231 Ist Floor Tecnoparque International De Panama
(72)**Name of Inventor :**
1)ASA Takeshi
2)GOMEZ Cebers
3)NUNEZ Gustavo A.
4)BRICENO Maria

(57) Abstract :
Colloidal carbonaceous material in water slurries having nano particles of carbonaceous material creating a pseudo fluid. The colloidal carbonaceous material in water slurry generally includes from about fifty to about seventy two weight percent of carbonaceous material with about 20 to about 80 percent of the carbonaceous material having a particle size of about one micron or less with a mode particle size of about 250 nanometers. The carbonaceous material in water slurry can also include a surfactant system containing one surfactant or mixtures of two or more surfactants or mixtures of one or more surfactants and an inorganic or organic salt. The carbonaceous material in water slurry can be used in low NOx burner applications as the main fuel and/or the reburn fuel in gasification processes as the input fuel either alone or in combination with organic materials in gas turbine applications and in diesel engine applications.

No. of Pages : 40 No. of Claims : 20

(12) PATENT APPLICATION PUBLICATION
(19) INDIA
(22) Date of filing of Application :04/10/2013
(21) Application No.8649/DELNP/2013 A
(43) Publication Date : 19/12/2014

(54) Title of the invention : USE OF L CARNITINE SALTS AND DERIVATIVES THEREOF FOR REDUCING OR PREVENTING FATIGUE AND IMPROVING COGNITIVE FUNCTION

(51) International classification :A61K31/205,A61P25/28,A61P3/02
(31) Priority Document No :11002833.9
(32) Priority Date :05/04/2011
(33) Name of priority country :EPO
(86) International Application No :PCT/EP2012/056151
Filing Date :04/04/2012
(87) International Publication No :WO 2012/136699
(61) Patent of Addition to Application Number :NA
Filing Date :NA
(62) Divisional to Application Number :NA
Filing Date :NA

(71)**Name of Applicant :**
1)LONZA LTD.
Address of Applicant :Lonzastrae CH 3930 Visp Switzerland
(72)**Name of Inventor :**
1)WILLIAMS Adriana
2)WARRIKOFF Frauke
3)FREITAS Ulla
4)SASSE Richard
5)OWEN Kevin

(57) Abstract :
The invention relates to the use of L carnitine a salt of L carnitine a derivative of L carnitine and/or salt of a derivative of L carnitine as well as respective methods and 5 compositions for reducing or preventing fatigue and/or for improving cognitive function in an animal. The animal is preferably a healthy individual and the use is preferably a non therapeutic use.

No. of Pages : 37 No. of Claims : 15

(12) PATENT APPLICATION PUBLICATION
(19) INDIA
(22) Date of filing of Application :04/10/2013
(21) Application No.8650/DELNP/2013 A
(43) Publication Date : 19/12/2014

(54) Title of the invention : MANAGING PLAYBACK OF SYNCHRONIZED CONTENT

(51) International classification :G06F17/00
(31) Priority Document No :13/070421
(32) Priority Date :23/03/2011
(33) Name of priority country :U.S.A.
(86) International Application No :PCT/US2012/030198
Filing Date :22/03/2012
(87) International Publication No :WO 2012/129445
(61) Patent of Addition to Application Number :NA
Filing Date :NA
(62) Divisional to Application Number :NA
Filing Date :NA

(71)**Name of Applicant :**
1)AUDIBLE INC.
Address of Applicant :1 Washington Park 16th Floor Newark NJ 07102 U.S.A.
(72)**Name of Inventor :**
1)STORY Guy A. Jr.
2)ISRAEL Bruce N.

(57) Abstract :
A computing device may provide a control interface that enables the user to manage synchronized output of companion content (e.g. text and corresponding audio content). A visual cue may be displayed identifying a current location in text corresponding to a current output position of companion audio content. The cue may be advanced during audio presentation to maintain synchronization between the output position of the audio content and a corresponding position in the text. In some embodiments synchronized output rnay be controlled by dragging a finger across the text displayed on the touch screen. A visual indication rnay be provided depicting the distance between the advancing position in the text and the current position of the user s finger. In further embodiments the speed at which the audio content is presented and the visual cue is advanced may be adjusted based at least in part on a user s performance on a task (e.g. a speed on an exercise machine).

No. of Pages : 70 No. of Claims : 15

(12) PATENT APPLICATION PUBLICATION
(19) INDIA
(22) Date of filing of Application :07/10/2013
(21) Application No.8686/DELNP/2013 A
(43) Publication Date : 19/12/2014

(54) Title of the invention : FORMULATION COMPONENT

(51) International classification :A01N37/10,A01N41/10,A01N41/06
(31) Priority Document No :1107040.6
(32) Priority Date :26/04/2011
(33) Name of priority country :U.K.
(86) International Application No :PCT/GB2012/000339
Filing Date :13/04/2012
(87) International Publication No :WO 2012/146887
(61) Patent of Addition to Application Number :NA
Filing Date :NA
(62) Divisional to Application Number :NA
Filing Date :NA

(71)**Name of Applicant :**
1)SYNGENTA LIMITED
Address of Applicant :European Regional Centre Priestley Road Surrey Research Park Guildford Surrey GU2 7YH U.K.
2)PERRY Ian
(72)**Name of Inventor :**
1)BELL Gordon Alastair
2)TAYLOR Philip
3)RAMSAY Julia Lynne
4)STOCK David

(57) Abstract :
The invention relates to the use of aromatic esters as adjuvants in compositions particularly for agrochemical use as well to compositions comprising such an aromatic ester in combination with at least one agrochemical. The invention further extends to methods of making and using such compositions. In particular the present invention relates to such compositions when formulated as or comprised by an emulsion concentrate (EC) an emulsion in water (EW) a suspension of particles in water (SC) a microcapsule formulation (CS) a suspension of particles with and emulsion (SE) a dispersion concentrate (DC) or an oil suspension (OD).

No. of Pages : 16 No. of Claims : 18

(12) PATENT APPLICATION PUBLICATION
(19) INDIA
(22) Date of filing of Application :07/10/2013
(21) Application No.8687/DELNP/2013 A
(43) Publication Date : 19/12/2014

(54) Title of the invention : MUTANT *BACILLUS THURINGIENSIS* CRY GENES AND METHODS OF USE

(51) International classification :C12N15/82,C07K14/325
(31) Priority Document No :61/469380
(32) Priority Date :30/03/2011
(33) Name of priority country :U.S.A.
(86) International Application No :PCT/IB2012/000827
Filing Date :30/03/2012
(87) International Publication No :WO 2012/131495
(61) Patent of Addition to Application Number :NA
Filing Date :NA
(62) Divisional to Application Number :NA
Filing Date :NA

(71)**Name of Applicant :**
1)UNIVERSIDAD NACIONAL AUTNOMA DE M‰XICO
Address of Applicant :9o. Piso de la Torre de Rectoria Ciudad Universitaria Delegaci³n Coyoac¡n Mexico D.F. C.P. 04510 Mexico
(72)**Name of Inventor :**
1)SOBERN CHAVEZ Mario
2)BRAVO DE LA PARRA Alejandra
3)GMEZ GMEZ Isabel

(57) Abstract :
The invention provides nucleic acids obtained from strains of encoding d endotoxins having pesticidal activity against insect pests including Lepidoptera. Particular embodiments of the invention provide isolated nucleic acid molecules encoding mutant pesticidal polypeptides pesticidal compositions expression cassettes and transformed microorganisms and plants comprising a nucleic acid molecule of the invention. Such compositions find use in methods for controlling plant pests.

No. of Pages : 57 No. of Claims : 35

(12) PATENT APPLICATION PUBLICATION
(19) INDIA
(22) Date of filing of Application :07/10/2013
(21) Application No.8688/DELNP/2013 A
(43) Publication Date : 19/12/2014

(54) Title of the invention : METHOD AND APPARATUS FOR DEFORMING A WEB

(51) International classification :B31F1/07,B29C55/18
(31) Priority Document No :13/094195
(32) Priority Date :26/04/2011
(33) Name of priority country :U.S.A.
(86) International Application No :PCT/US2012/035072
Filing Date :26/04/2012
(87) International Publication No :WO 2012/149074
(61) Patent of Addition to Application Number :NA
Filing Date :NA
(62) Divisional to Application Number :NA
Filing Date :NA

(71)**Name of Applicant :**
1)THE PROCTER & GAMBLE COMPANY
Address of Applicant :One Procter & Gamble Plaza Cincinnati Ohio 45202 U.S.A.
(72)**Name of Inventor :**
1)LAKE Kirk Wallace
2)ORR Jill Marlene
3)CURRO John Joseph
4)STRUBE John Brian
5)MULLANE Timothy Ian
6)KOCHER Leroy Joseph

(57) Abstract :
Methods and apparatuses for deforming a web are disclosed. In one embodiment the method involves feeding a web (10) into a nip that is formed between at least tow intermeshing rolls (162 170). The rolls are configured to deforming web with at least two sets of deformations that are oriented in different directions relative to the surfaces of the web.

No. of Pages : 68 No. of Claims : 9

(12) PATENT APPLICATION PUBLICATION
(19) INDIA
(22) Date of filing of Application :01/10/2013
(21) Application No.8558/DELNP/2013 A
(43) Publication Date : 19/12/2014

(54) Title of the invention : METHOD FOR THE PRODUCTION OF TANKS HAVING HIGH FLUID BARRIER PROPERTIES

(51) International classification :B29C45/00,B60K15/03
(31) Priority Document No :1153118
(32) Priority Date :11/04/2011
(33) Name of priority country :France
(86) International Application No :PCT/EP2012/056446
Filing Date :10/04/2012
(87) International Publication No :WO 2012/140010
(61) Patent of Addition to Application Number :NA
Filing Date :NA
(62) Divisional to Application Number :NA
Filing Date :NA

(71)**Name of Applicant :**
1)RHODIA OPERATIONS
Address of Applicant :40 rue de la Haie Coq F 93306 Aubervilliers France
(72)**Name of Inventor :**
1)BZDUCHA Wojciech
2)SPERONI Franco
3)LAPIERRE Christophe

(57) Abstract :
The invention relates to a method for producing a tank having high fluid barrier properties. According to the invention a specific polyamide composition containing impact resistance modifying agents is used in a first step to produce components by means of injection moulding and subsequently said components are assembled in order to obtain the tank. The viscosity and gasoline permeability of the polyamide composition are sufficient to allow the production of tanks that provide an excellent trade off between fluid barrier properties and mechanical properties.

No. of Pages : 23 No. of Claims : 16

(12) PATENT APPLICATION PUBLICATION
(19) INDIA
(22) Date of filing of Application :01/10/2013
(21) Application No.8559/DELNP/2013 A
(43) Publication Date : 19/12/2014

(54) Title of the invention : TUBULAR BAG MACHINE AND METHOD FOR OPERATING A TUBULAR BAG MACHINE

(51) International classification :B65B9/213,B65B9/20,B65B41/16
(31) Priority Document No :10 2011 075 379.6
(32) Priority Date :06/05/2011
(33) Name of priority country :Germany
(86) International Application No :PCT/EP2012/056777
Filing Date :13/04/2012
(87) International Publication No :WO 2012/152529
(61) Patent of Addition to Application Number :NA
Filing Date :NA
(62) Divisional to Application Number :NA
Filing Date :NA

(71)**Name of Applicant :**
1)ROBERT BOSCH GMBH
Address of Applicant :Postfach 30 02 20 70442 Stuttgart Germany
(72)**Name of Inventor :**
1)SLENDERS Peter

(57) Abstract :
The invention relates to a tubular bag machine (10) having a tube forming device (15) comprising a forming shoulder (16) and a forming pipe (17) for forming a packaging material tube (5) made of at least one packaging material web (11) a vacuum assisted take off device (25) in the form of endless recirculating belts (26 27) in the region of the forming pipe (17) a storage roll (12) for storing the packaging material web (11) wherein a partial length of the packaging material web (11) is intermediately stored in a buffer device (38) between the storage roll (12) and the forming pipe (17) and wherein the buffer device (38) comprises at least one dancer roll (43 44) having a force applied thereto by means of a tensioning device (48) and applying a tension to the packaging material web (11) in the region of the buffer device (38) which tension acts at least partially unto the region of the take off device (25). According to the invention the force application of the at least one dancer roll (43 44) can be modified by the tensioning device (48) as a function of the operating state of the take off device (25).

No. of Pages : 13 No. of Claims : 10

(12) PATENT APPLICATION PUBLICATION
(19) INDIA
(22) Date of filing of Application :07/10/2013
(21) Application No.8693/DELNP/2013 A
(43) Publication Date : 19/12/2014

(54) Title of the invention : FLEXIBLE COVER FOR CONTACTS OF A PLUG IN OR WITHDRAWABLE UNIT

(51) International classification :H02B11/24
(31) Priority Document No :13/042512
(32) Priority Date :08/03/2011
(33) Name of priority country :U.S.A.
(86) International Application No :PCT/EP2012/053823
Filing Date :06/03/2012
(87) International Publication No :WO 2012/120012
(61) Patent of Addition to Application Number :NA
Filing Date :NA
(62) Divisional to Application Number :NA
Filing Date :NA

(71)**Name of Applicant :**
1)EATON ELECTRICAL IP GMBH & CO. KG
Address of Applicant :Airport Center Schnefeld Mittelstrasse 5 5a 12529 Schnefeld Germany
(72)**Name of Inventor :**
1)KRIECHEL Ralph
2)KUTSCHE Wolfgang
3)BOGDON Erik
4)KOZAR Aron
5)RODGERS Craig

(57) Abstract :
A shutter (20) for insulating electrical contacts (54) includes a first panel (22) having a first opening (30) and a second panel (24) having a second opening (30). The first opening is offset from the second opening when the shutter is in a closed position. The second panel (24) includes a first guide (34) configured to react to a pressure of a phase barrier (60) of an insertable withdrawable unit (10) thereon to move the second panel in a first sliding direction relative to the first panel such that the first and second openings align so as to allow an electrical contact to extend therethrough. A spring housing (100) having a spring disposed therein between at least two support legs (102 103) is slidably disposable in the first panel (22) and extends through the second panel (24).

No. of Pages : 24 No. of Claims : 20

(12) PATENT APPLICATION PUBLICATION
(19) INDIA
(22) Date of filing of Application :07/10/2013
(21) Application No.8694/DELNP/2013 A
(43) Publication Date : 19/12/2014

(54) Title of the invention : YARN A PROCESS FOR MAKING THE YARN AND PRODUCTS CONTAINING THE YARN

(51) International classification :D02G3/44
(31) Priority Document No :11165382.0
(32) Priority Date :10/05/2011
(33) Name of priority country :EPO
(86) International Application No :PCT/EP2012/058652
Filing Date :10/05/2012
(87) International Publication No :WO 2012/152871
(61) Patent of Addition to Application Number :NA
Filing Date :NA
(62) Divisional to Application Number :NA
Filing Date :NA

(71)**Name of Applicant :**
1)DSM IP ASSETS B.V.
Address of Applicant :Het Overloon 1 NL 6411 TE Heerlen Netherlands
(72)**Name of Inventor :**
1)VERDAASDONK Peto
2)HENSSEN Giovanni Joseph Ida

(57) Abstract :
There is provided a cut resistant yarn comprising a blend of first and second staple fibers wherein the first staple fibers are polymer fibers each first staple fiber comprising a polymer body encasing a hard component said hard component being a plurality of hard fibers said hard fibers having an average diameter of at most 25 microns; and the second staple fibers are different to the first staple fibers wherein the weight ratio of the first to second staple polymer fibers is from 1:99 to 99:1.

No. of Pages : 15 No. of Claims : 15

(12) PATENT APPLICATION PUBLICATION
(19) INDIA
(22) Date of filing of Application :03/10/2013
(21) Application No.8587/DELNP/2013 A
(43) Publication Date : 19/12/2014

(54) Title of the invention : CATALYTIC PROCESS FOR CONTINUOUSLY GENERATING POLYOLS

(51) International classification :C07C29/94,C07C31/26,C07C31/18
(31) Priority Document No :13/193227
(32) Priority Date :28/07/2011
(33) Name of priority country :U.S.A.
(86) International Application No :PCT/US2012/046223
Filing Date :11/07/2012
(87) International Publication No :WO 2013/015990
(61) Patent of Addition to Application Number :NA
Filing Date :NA
(62) Divisional to Application Number :NA
Filing Date :NA

(71)**Name of Applicant :**
1)UOP LLC
Address of Applicant :25 East Algonquin Road P. O. Box 5017 Des Plaines Illinois 60017 5017 U.S.A.
(72)**Name of Inventor :**
1)KALNES Tom N.
2)CHEN John Q.
3)KOCAL Joseph A.

(57) Abstract :
A catalytic process for generating at least one polyol from a feedstock comprising cellulose is performed in a continuous manner. The process involves contacting continuously hydrogen water and a feedstock comprising cellulose with a catalyst to generate an effluent stream comprising at least one polyol water hydrogen and at least one co product. The water hydrogen and at least one co product are separated from the effluent stream and recycled to the reaction zone. The polyol is recovered from the effluent stream.

No. of Pages : 25 No. of Claims : 10

(12) PATENT APPLICATION PUBLICATION
(19) INDIA
(22) Date of filing of Application :23/03/2012
(21) Application No.859/DEL/2012 A
(43) Publication Date : 19/12/2014

(54) Title of the invention : BYPASS VALVE

(51) International classification :B23B
(31) Priority Document No :NA
(32) Priority Date :NA
(33) Name of priority country :NA
(86) International Application No :NA
Filing Date :NA
(87) International Publication No :NA
(61) Patent of Addition to Application Number :NA
Filing Date :NA
(62) Divisional to Application Number :NA
Filing Date :NA

(71)**Name of Applicant :**
1)TROCHOCENTRIC PATENTVERWERTUNGSGESELLSCHAFT MBH
Address of Applicant :CONCHESSTRAE 23, 88326 AULENDORF, GERMANY
(72)**Name of Inventor :**
1)HAERLE, CHRISTOF

(57) Abstract :
A bypass valve for implementation in for example a combustion engine, said valve comprising: a valve housing (1) comprising a valve body bore (2), at least one inlet (41) and at least one outlet (51); and a valve piston (3) which is movably arranged in the valve body bore (2) and comprises a first end (6), a second end (7) and a passage (8) between the two ends (7, 7) for connecting the at least one inlet (41) to the at least one outlet (51), wherein the first end and the second end (6, 7) each have a front face (61, 71) and a rear face (62, 72), wherein the front faces (61, 71) face each other and the rear faces (62, 72) face in opposite directions, characterised in that at least one aperture (14) is formed in the first end (6) of the valve piston (3) and/or the inner surface (12) of the valve bore (2) which tightly surrounds the first end (6), in order to allow a fluid to flow through the first end (6).

No. of Pages : 22 No. of Claims : 16

(12) PATENT APPLICATION PUBLICATION
(19) INDIA
(22) Date of filing of Application :07/10/2013
(21) Application No.8700/DELNP/2013 A
(43) Publication Date : 19/12/2014

(54) Title of the invention : GENETICALLY MODIFIED CELL AND PROCESS FOR USE OF SAID CELL

(51) International classification :C12N9/00,C12N9/02,C12P17/04
(31) Priority Document No :2006359
(32) Priority Date :08/03/2011
(33) Name of priority country :Netherlands
(86) International Application No :PCT/NL2012/050141
Filing Date :07/03/2012
(87) International Publication No :WO 2012/064195
(61) Patent of Addition to Application Number :NA
Filing Date :NA
(62) Divisional to Application Number :NA
Filing Date :NA

(71)**Name of Applicant :**
1)PURAC BIOCHEM B.V.
Address of Applicant :Arkelsedijk 46 NL 4206 AC Gorinchem Netherlands
2)BIRD ENGINEERING B.V.
(72)**Name of Inventor :**
1)WIERCKX Nick Johannes Petrus
2)ELINK SCHUURMAN Tom Dani«l
3)KUIJPER Sipko Maarten
4)RUIJSSENAARS Harald Johan

(57) Abstract :
The present invention relates to the field of biotransformation of furanic compounds. More particular the present invention relates to novel genetically modified cells with improved characteristics for biocatalytic transformation of furanic compounds and a vector suitable for the genetic modification of a host cell. Further aspects of the invention are aimed at processes for biotransformation of 5 (hydroxymethyl)furan 2 carboxylic acid (HMF acid) and its precursors with the use of the cell according to the invention.

No. of Pages : 86 No. of Claims : 24

(12) PATENT APPLICATION PUBLICATION
(19) INDIA
(22) Date of filing of Application :07/10/2013
(21) Application No.8701/DELNP/2013 A
(43) Publication Date : 19/12/2014

(54) Title of the invention : WIND TURBINE ROTOR SHAFT SUPPORT STRUCTURE

(51) International classification :F03D11/00
(31) Priority Document No :61/450151
(32) Priority Date :08/03/2011
(33) Name of priority country :U.S.A.
(86) International Application No :PCT/DK2012/050071
Filing Date :08/03/2012
(87) International Publication No :WO 2012/119603
(61) Patent of Addition to Application Number :NA
Filing Date :NA
(62) Divisional to Application Number :NA
Filing Date :NA

(71)**Name of Applicant :**
1)VESTAS WIND SYSTEMS A/S
Address of Applicant :Hedeager 44 DK 8200 Aarhus N Denmark
(72)**Name of Inventor :**
1)MARKUSSEN Erik

(57) Abstract :
Support structures of a wind turbine including a bearing housing that supports bearings that allow a rotor shaft to rotate about a rotor axis. The bearing housing may be constructed to minimize forces in the bearings in response moments that act on the rotor shaft about axes other than the rotor axis. The support structures of the wind turbine may also include a base to which the bearing housing may be mounted. The base may include features that minimize stress within the wind turbine structure and/or a yaw mechanism of the wind turbine in response to moments that act within the wind turbine about axes other than the rotor axis.

No. of Pages : 31 No. of Claims : 28

(12) PATENT APPLICATION PUBLICATION
(19) INDIA
(22) Date of filing of Application :07/10/2013
(21) Application No.8702/DELNP/2013 A
(43) Publication Date : 19/12/2014

(54) Title of the invention : REDUNDANT POWER SUPPLY ARCHITECTURE

(51) International classification :F03D9/00,H02J9/06
(31) Priority Document No :PA 2011 70146
(32) Priority Date :30/03/2011
(33) Name of priority country :Denmark
(86) International Application No :PCT/DK2012/050098
Filing Date :29/03/2012
(87) International Publication No :WO 2012/130247
(61) Patent of Addition to Application Number :NA
Filing Date :NA
(62) Divisional to Application Number :NA
Filing Date :NA

(71)**Name of Applicant :**
1)VESTAS WIND SYSTEMS A/S
Address of Applicant :Hedeager 44 DK 8200 Aarhus N Denmark
(72)**Name of Inventor :**
1)DANIELSEN Niels Erik

(57) Abstract :
The present invention relates to a redundant power supply system for wind turbine control systems said power supply system being adapted to supply power to one or more power consumers of a wind turbine control system the redundant power supply system comprising a first power rail a second power rail and switching means being adapted to select the first or the second power rail so as to provide power to at least part of a power consumer from either the first power rail or the second power rail. The invention further relates to an associated method.

No. of Pages : 17 No. of Claims : 14

(12) PATENT APPLICATION PUBLICATION
(19) INDIA
(22) Date of filing of Application :03/10/2013
(21) Application No.8603/DELNP/2013 A
(43) Publication Date : 19/12/2014

(54) Title of the invention : METHOD FOR FLAVORING UNPOPPED POPCORN KERNELS AND UNPOPPED POPCORN KERNEL PRODUCT OBTAINED BY SAID METHOD

(51) International classification :A23L1/18
(31) Priority Document No :P201130410
(32) Priority Date :22/03/2011
(33) Name of priority country :Spain
(86) International Application No :PCT/IB2012/051368
Filing Date :22/03/2012
(87) International Publication No :WO 2012/127437
(61) Patent of Addition to Application Number :NA
Filing Date :NA
(62) Divisional to Application Number :NA
Filing Date :NA

(71)**Name of Applicant :**
1)TANIO S. A. (SOCIEDAD UNIPERSONAL)
Address of Applicant :C. Notario Rull 41 E 43205 Reus Spain
(72)**Name of Inventor :**
1)GMEZ ARROYO F¡tima
2)DUR N VILA Juan Ram³n

(57) Abstract :
The method comprises the steps of: i) applying a portion of adhesive liquid on the unpopped kernels comprising said adhesive liquid an aqueous based adhesive composition; ii) after step i) applying a portion of flavorant on said kernels keeping said kernels under movement at a temperature from 50°C to 70°C for enough time in order to allow the evaporation of water from said adhesive liquid : iii) cyclically repeating steps i) and ii) until each of said steps is carried out at least two times while said kernels are kept at a temperature from 50°C to 70°C the repetition of said steps I) and ii) allowing the formation of a coating film over the kernel said coating film comprising a plurality of layers of adhesive and flavorant. The product is characterized in that said kernels comprise at least 4.5% by weight of flavorant with respect to the total weight of the unpopped kernel. It has been observed that the waste of flavorant is reduced very significantly the application efficiency being very higher.

No. of Pages : 15 No. of Claims : 17

(12) PATENT APPLICATION PUBLICATION
(19) INDIA
(22) Date of filing of Application :03/10/2013
(21) Application No.8604/DELNP/2013 A
(43) Publication Date : 19/12/2014

(54) Title of the invention : STIRRING MILL

(51) International classification :A23G1/04,B01F13/10,B02C17/16
(31) Priority Document No :11164098.3
(32) Priority Date :28/04/2011
(33) Name of priority country :EPO
(86) International Application No :PCT/EP2012/057926
Filing Date :30/04/2012
(87) International Publication No :WO 2012/146784
(61) Patent of Addition to Application Number :NA
Filing Date :NA
(62) Divisional to Application Number :NA
Filing Date :NA

(71)**Name of Applicant :**
1)BHLER AG
Address of Applicant :Gupfenstrasse 5 CH 9240 Uzwil Switzerland
(72)**Name of Inventor :**
1)BRAUN Peter
2)BEHRENS Raimund
3)NESIMI Skeljzen
4)CHIALINA Marco

(57) Abstract :
Disclosed is a stirring mill (10) for the food sector comprising a substantially cylindrical or conical receptacle (1) that has an inner receptacle wall (2) and comprising a rotatably mounted stirring element (3) that includes a shaft (4). Pin shaped stirring tools (5) which project especially substantially in a radial direction from the shaft (4) are located on the stirring element (3). Furthermore at least one static grinding blade (6) is formed on the inner receptacle wall (2) and disk shaped or partial disk shaped stirring tools (5) are formed on the stirring element (3).

No. of Pages : 20 No. of Claims : 15

(12) PATENT APPLICATION PUBLICATION
(19) INDIA
(22) Date of filing of Application :03/10/2013
(21) Application No.8605/DELNP/2013 A
(43) Publication Date : 19/12/2014

(54) Title of the invention : HIGH VELOCITY MIST EVAPORATION

(51) International classification :F24F5/00,F24F6/16,F28C3/08
(31) Priority Document No :2011901005
(32) Priority Date :21/03/2011
(33) Name of priority country :Australia
(86) International Application No :PCT/AU2012/000289
Filing Date :21/03/2012
(87) International Publication No :WO 2012/126052
(61) Patent of Addition to Application Number :NA
Filing Date :NA
(62) Divisional to Application Number :NA
Filing Date :NA

(71)**Name of Applicant :**
1)HIVAP PTY LTD
Address of Applicant :9 Silver Street South Fremantle Western Australia 6162 Australia
(72)**Name of Inventor :**
1)ATTEY Graeme Scott

(57) Abstract :
An evaporation system (10) and method has at least one fan (9) operatively connected to drive means (30) to effect fan rotation at least one flow path to supply liquid to at least one nozzle (12) to spray a mist of the liquid under centrifugal pressure. Velocity differential between the rotating nozzle(s) and airflow created by the at least one fan provides evaporation of the sprayed liquid. Inlet vanes (60) direct airflow in a direction contra to fan rotation to increase velocity differential. The nozzles can be on fan blades (4) and/or a central disc/hub (2). The method and system can be used for air conditioning snow making desalination or in industrial or commercial evaporators.

No. of Pages : 29 No. of Claims : 17

(12) PATENT APPLICATION PUBLICATION
(19) INDIA
(22) Date of filing of Application :07/10/2013
(21) Application No.8710/DELNP/2013 A
(43) Publication Date : 19/12/2014

(54) Title of the invention : USE OF CYTOKINE LEVELS IN INTRAVENOUS IMMUNOGLOBULIN TREATMENT OF ALZHEIMER S DISEASE

(51) International classification :G01N33/68
(31) Priority Document No :61/470819
(32) Priority Date :01/04/2011
(33) Name of priority country :U.S.A.
(86) International Application No :PCT/US2012/031667
Filing Date :30/03/2012
(87) International Publication No :WO 2012/135752
(61) Patent of Addition to Application Number :NA
Filing Date :NA
(62) Divisional to Application Number :NA
Filing Date :NA

(71)**Name of Applicant :**
1)BAXTER INTERNATIONAL INC.
Address of Applicant :One Baxter Parkway Deerfield Illinois 60015 U.S.A.
2)BAXTER HEALTHCARE S.A.
(72)**Name of Inventor :**
1)RELKIN Norman R.
2)BACKES Larry
3)SCHIFF Richard

(57) Abstract :
The present invention relates to the use of the level of certain cytokines in a patient s blood as an objective measure for the purpose of assessing disease progression in patients suffering from Alzheimer s disease and for the purpose of determining therapeutic effectiveness of a treatment regimen. Methods for treating Alzheimer s disease and monitoring therapeutic effectiveness are provided. Preferably the therapeutic agent is an intravenous immunoglobulin (IVIG) composition.

No. of Pages : 32 No. of Claims : 25

(12) PATENT APPLICATION PUBLICATION
(19) INDIA
(22) Date of filing of Application :07/10/2013
(21) Application No.8711/DELNP/2013 A
(43) Publication Date : 19/12/2014

(54) Title of the invention : SAW BLADE

(51) International classification :B23D61/12
(31) Priority Document No :102011075402.4
(32) Priority Date :06/05/2011
(33) Name of priority country :Germany
(86) International Application No :PCT/EP2012/052736
Filing Date :17/02/2012
(87) International Publication No :WO 2012/152458
(61) Patent of Addition to Application Number :NA
Filing Date :NA
(62) Divisional to Application Number :NA
Filing Date :NA

(71)**Name of Applicant :**
1)ROBERT BOSCH GMBH
Address of Applicant :Postfach 30 02 20 70442 Stuttgart Germany
(72)**Name of Inventor :**
1)BOZIC Milan

(57) Abstract :
The invention relates to a saw blade comprising saw teeth along a tooth side of a blade carrier (2) the saw teeth (3) being set and sharpened on at least one lateral surface in such a way that the lateral surface approximately resembles a concave wall surface.

No. of Pages : 13 No. of Claims : 10

(12) PATENT APPLICATION PUBLICATION
(19) INDIA
(22) Date of filing of Application :07/10/2013
(21) Application No.8669/DELNP/2013 A
(43) Publication Date : 19/12/2014

(54) Title of the invention : HIGH STRENGTH COLD ROLLED STEEL SHEET WITH EXCELLENT LOCAL FORMABILITY AND MANUFACTURING METHOD THEREFOR

(51) International classification :C22C38/00,C21D9/46,C22C38/06
(31) Priority Document No :2011089250
(32) Priority Date :13/04/2011
(33) Name of priority country :Japan
(86) International Application No :PCT/JP2012/060067
Filing Date :12/04/2012
(87) International Publication No :WO 2012/141265
(61) Patent of Addition to Application Number :NA
Filing Date :NA
(62) Divisional to Application Number :NA
Filing Date :NA

(71)**Name of Applicant :**
1)NIPPON STEEL & SUMITOMO METAL CORPORATION
Address of Applicant :6 1 Marunouchi 2 chome Chiyoda ku Tokyo 1008071 Japan
(72)**Name of Inventor :**
1)SUWA Yoshihiro
2)NAKANO Kazuaki
3)HAYASHI Kunio
4)OKAMOTO Riki
5)FUJITA Nobuhiro
6)SANO Kohichi

(57) Abstract :
This high strength cold rolled steel sheet with excellent local formability contains in mass% 0.07% to 0.20% C 0.001% to 2.5% Si 0.01% to 4.0% Mn 0.001% to 0.15% P 0.0005% to 0.03% S 0.001% to 2.0% Al 0.0005% to 0.01% N and 0.0005% to 0.01% O with the remainder comprising iron and unavoidable purities; the area ratio of bainite in the metal structure is at least 95%; the average value of the polarization density of {100}<011> to {223}<110> orientation groups in a sheet thickness central area which has a sheet thickness ranging from 5/8 to 3/8 from the surface of the steel sheet is not more than 4.0 and the polarization density of the {332}<113> crystal orientation is not more than 5.0; and the volume mean diameter of the crystal particles of the metal structure is not more than 10 μm.

No. of Pages : 67 No. of Claims : 10

(12) PATENT APPLICATION PUBLICATION
(19) INDIA
(22) Date of filing of Application :07/10/2013
(21) Application No.8670/DELNP/2013 A
(43) Publication Date : 19/12/2014

(54) Title of the invention : ENDOVASCULAR PROSTHESIS AND DELIVERY DEVICE

(51) International classification :A61F2/84,A61F2/86
(31) Priority Document No :61/457604
(32) Priority Date :29/04/2011
(33) Name of priority country :U.S.A.
(86) International Application No :PCT/CA2012/000388
Filing Date :27/04/2012
(87) International Publication No :WO 2012/145826
(61) Patent of Addition to Application Number :NA
Filing Date :NA
(62) Divisional to Application Number :NA
Filing Date :NA

(71)**Name of Applicant :**
1)EVYSIO MEDICAL DEVICES ULC
Address of Applicant :107 1099 8th Avenue West Vancouver British Columbia V6H 1C3 Canada
(72)**Name of Inventor :**
1)TIPPETT Jonathan G.
2)FUNG Eric Soun Sang
3)BORSKY Cassie A.

(57) Abstract :
In one of its aspects the present invention relates to an endovascular prosthesis. The endovascular prosthesis comprises a first expandable portion expandable from a first unexpended state to a second expanded state to urge the first expandable portion against a vascular lumen and a retractable leaf portion attached to the first expandable portion. The retractable leaf portion comprises at least one spine portion and a plurality of rib portions attached to the spine portion. Longitudinally adjacent pairs of rib portions are free of interconnecting struts. The endovascular prosthesis that can be unsheathed and re sheathed for repositioning of the endovascular prosthesis prior to final deployment thereof. There is also described a delivery device that that is particularly well suited to delivering the present endovascular prosthesis through tortuous vasculature in the body.

No. of Pages : 104 No. of Claims : 75

(12) PATENT APPLICATION PUBLICATION
(19) INDIA
(22) Date of filing of Application :07/10/2013
(21) Application No.8671/DELNP/2013 A
(43) Publication Date : 19/12/2014

(54) Title of the invention : MICROCATHETER WITH DISTAL TIP PORTION AND PROXIMAL SOLUTION LUMEN

(51) International classification :A61M25/00
(31) Priority Document No :13/079866
(32) Priority Date :05/04/2011
(33) Name of priority country :U.S.A.
(86) International Application No :PCT/IB2012/051641
Filing Date :04/04/2012
(87) International Publication No :WO 2012/137139
(61) Patent of Addition to Application Number :NA
Filing Date :NA
(62) Divisional to Application Number :NA
Filing Date :NA

(71)**Name of Applicant :**
1)THERMOPEUTIX INC.
Address of Applicant :9925 Business Park Ave. Suite B San Diego CA 92131 U.S.A.
(72)**Name of Inventor :**
1)SOLAR Ronald Jay
2)SHAKED Yoav
3)LIEBER Glen

(57) Abstract :
There is provided a microcatheter having a proximal solution lumen and a distal tip portion with a guidewire lumen. The microcatheter and methods of use thereof allows for introduction of solution into a vessel while manipulating the guidewire and/or the microcatheter itself. The solution may be a contrast solution for viewing of the vessel a therapeutic or diagnostic solution or any other type of solution.

No. of Pages : 29 No. of Claims : 35

(12) PATENT APPLICATION PUBLICATION
(19) INDIA
(22) Date of filing of Application :07/10/2013
(21) Application No.8672/DELNP/2013 A
(43) Publication Date : 19/12/2014

(54) Title of the invention : ENDOVASCULAR PROSTHESIS AND DELIVERY DEVICE

(51) International classification :A61F2/86,A61F2/84
(31) Priority Document No :61/457605
(32) Priority Date :29/04/2011
(33) Name of priority country :U.S.A.
(86) International Application No :PCT/CA2012/000379
Filing Date :27/04/2012
(87) International Publication No :WO 2012/145823
(61) Patent of Addition to Application Number :NA
Filing Date :NA
(62) Divisional to Application Number :NA
Filing Date :NA

(71)**Name of Applicant :**
1)EVYSIO MEDICAL DEVICES ULC
Address of Applicant :107 1099 8th Avenue West Vancouver British Columbia V6H 1C3 Canada
(72)**Name of Inventor :**
1)TIPPETT Jonathan G.
2)FUNG Eric Soun Sang
3)MAROTTA Thomas R.
4)McDOUGALL Ian T.B.
5)PENN Ian M.
6)RICCI Donald R.

(57) Abstract :
In one of its aspects the present invention relates to an endovascular prosthesis. The endovascular prosthesis comprises a first expandable portion expandable from a first unexpanded state to a second expanded state to urge the first expandable portion against a vascular lumen and a retractable leaf portion attached to the first expandable portion. The retractable leaf portion comprises at least one spine portion and a plurality of rib portions attached to the spine portion. Longitudinally adjacent pairs of rib portions are free of interconnecting struts. The endovascular prosthesis that can be unsheathed and re sheathed for repositioning of the endovascular prosthesis prior to final deployment thereof. There is also described a delivery device that is particularly well suited to delivering the present endovascular prosthesis through tortuous vasculature in the body.

No. of Pages : 110 No. of Claims : 138

(12) PATENT APPLICATION PUBLICATION
(19) INDIA
(22) Date of filing of Application :04/10/2013
(21) Application No.8651/DELNP/2013 A
(43) Publication Date : 19/12/2014

(54) Title of the invention : BIOCOMPATIBLE AND BIODEGRADABLE GRADIENT LAYER SYSTEM FOR REGENERATIVE MEDICINE AND FOR TISSUE SUPPORT

(51) International classification :A61L27/34,A61L27/38,A61L27/50
(31) Priority Document No :11002836.2
(32) Priority Date :05/04/2011
(33) Name of priority country :EPO
(86) International Application No :PCT/EP2012/056155
Filing Date :04/04/2012
(87) International Publication No :WO 2012/136701
(61) Patent of Addition to Application Number :NA
Filing Date :NA
(62) Divisional to Application Number :NA
Filing Date :NA

(71)**Name of Applicant :**
1)UNIVERSIT„TSKLINIKUM FREIBURG
Address of Applicant :Hugstetter Str. 49 79095 Freiburg Germany
2)ALBERT LUDWIGS UNIVERSIT„T FREIBURG
(72)**Name of Inventor :**
1)STEINBERG Thorsten
2)TOMAKIDI Pascal
3)SCHULZ Simon
4)ANGARANO Marco
5)MLHAUPT Rolf
6)FABRITIUS Martin

(57) Abstract :
The present invention is directed to a biocompatible and preferably biodegradable gradient layer system comprising at least one set of layers comprising a biocompatible and preferably biodegradable cross linked polymer and at least one biocompatible and preferably biodegradable support layer wherein a gradient is preferably formed with respect to the mechanical and/or physical properties of one or more layers of the at least one set of layers comprising a biocompatible and biodegradable cross linked polymer and/or the at least one biocompatible and preferably biodegradable support layer. The at least one support layer preferably comprises a biocompatible and preferably biodegradable meltable polymer and/or a biocompatible and incorporable material. This biocompatible and preferably biodegradable gradient layer system may be used as a biomaterial for regenerative medicine particularly as a wound dressing or for tissue support. The present invention also provides means utilizing said inventive gradient layer system and methods for producing same.

No. of Pages : 71 No. of Claims : 14

(12) PATENT APPLICATION PUBLICATION
(19) INDIA
(22) Date of filing of Application :04/10/2013
(21) Application No.8652/DELNP/2013 A
(43) Publication Date : 19/12/2014

(54) Title of the invention : PROCESS FOR MANUFACTURING POLYCARBONATE FROM DIANHYDROHEXITOL DIALKYLCARBONATE

(51) International classification :C08G64/02,C08G64/30
(31) Priority Document No :1152950
(32) Priority Date :05/04/2011
(33) Name of priority country :France
(86) International Application No :PCT/FR2012/050748
Filing Date :05/04/2012
(87) International Publication No :WO 2012/136942
(61) Patent of Addition to Application Number :NA
Filing Date :NA
(62) Divisional to Application Number :NA
Filing Date :NA

(71)**Name of Applicant :**
1)ROQUETTE FRERES
Address of Applicant :F 62136 Lestrem France
(72)**Name of Inventor :**
1)IBERT Mathias
2)JOSIEN Emilie
3)WYART Herv

(57) Abstract :
The invention relates to a process for manufacturing a polycarbonate, having a glass transition temprature greater than or equal to 50°C, comprising: ■ a step (1) of introducing into a reactor a monomer of formula (I) and RI and R2 being identical or diffrent alkyl groups; ■ a step (2) of introducing into the reactor at least one cyclic diol or a mixture of diols (B) comprising at o least 20 mol% of cyclic diols; ■ a subsquent step (3) of polycondensation via transesterification of the mixture of monomers com prising the monomers (A) and (B); ■ a step (4) of recovering the polycarbonate formed during step (3).

No. of Pages : 43 No. of Claims : 15

(12) PATENT APPLICATION PUBLICATION
(19) INDIA
(22) Date of filing of Application :04/10/2013
(21) Application No.8653/DELNP/2013 A
(43) Publication Date : 19/12/2014

(54) Title of the invention : PROCESS FOR MANUFACTURING POLYCARBONATE FROM DERIVATIVES OF DIANHYDROHEXITOLS BEARING TWO ALKYL CARBONATE FUNCTIONS

(51) International classification :C08G64/02,C08G64/30
(31) Priority Document No :11 52951
(32) Priority Date :05/04/2011
(33) Name of priority country :France
(86) International Application No :PCT/FR2012/050749
Filing Date :05/04/2012
(87) International Publication No :WO 2012/140353
(61) Patent of Addition to Application Number :NA
Filing Date :NA
(62) Divisional to Application Number :NA
Filing Date :NA

(71)**Name of Applicant :**
1)ROQUETTE FRERES
Address of Applicant :Lestrem 62136 France
(72)**Name of Inventor :**
1)IBERT Mathias
2)JOSIEN Emilie
3)WYART Herv

(57) Abstract :
The subject of the invention is a process for manufacturing polycarbonate comprising: a step (1) of introducing into a reactor a particular composition (A) of at least one dianhydrohexitol carbonate bearing two alkyl carbonate functions; a step (2) of introducing a diol or a mixture of diols (B); a subsequent step (3) of polycondensation by transesterification of the mixture of monomers comprising (A) and (B); a step (4) of recovering the polycarbonate formed during step (3).

No. of Pages : 40 No. of Claims : 16

(12) PATENT APPLICATION PUBLICATION
(19) INDIA
(22) Date of filing of Application :04/10/2013
(21) Application No.8655/DELNP/2013 A
(43) Publication Date : 19/12/2014

(54) Title of the invention : COMPOSITIONS AND METHODS FOR TREATING MULTI DRUG RESISTANT MALARIA

(51) International classification :A61K36/28
(31) Priority Document No :61/454246
(32) Priority Date :18/03/2011
(33) Name of priority country :U.S.A.
(86) International Application No :PCT/IB2011/053962
Filing Date :10/09/2011
(87) International Publication No :WO 2012/127287
(61) Patent of Addition to Application Number :NA
Filing Date :NA
(62) Divisional to Application Number :NA
Filing Date :NA

(71)**Name of Applicant :**
1)FEBRIS BIO TECH LIMITED
Address of Applicant :44 Radar Road Whitianga New Zealand
(72)**Name of Inventor :**
1)SMITH Garth Selwyn
2)ZHANG Lixin
3)DAI Huanqin

(57) Abstract :
A method is provided for treating an individual for a malarial infection in particular drug resistant species of Plasmodium including administering to the individual in need of such treatment a composition comprising an extract containing an effective amount of one or more anti malarial di or tri terpene compounds. Potent and effective extracts containing the anti malarial compounds can be derived from Luo Han fruit and Stevia leaves including combinations of the same for the purpose of treating and preventing malaria in an inexpensive manner from readily available commodities. In one embodiment the composition is administered orally in a solid or liquid ingestible form.

No. of Pages : 27 No. of Claims : 23

(12) PATENT APPLICATION PUBLICATION
(19) INDIA
(22) Date of filing of Application :07/10/2013
(21) Application No.8663/DELNP/2013 A
(43) Publication Date : 19/12/2014

(54) Title of the invention : VESSELS FOR MOLTEN SEMICONDUCTING MATERIALS AND METHODS OF MAKING THE SAME

(51) International classification :C30B28/06,C30B35/00,C30B29/06
(31) Priority Document No :13/093336
(32) Priority Date :25/04/2011
(33) Name of priority country :U.S.A.
(86) International Application No :PCT/US2012/030681
Filing Date :27/03/2012
(87) International Publication No :WO 2012/148611
(61) Patent of Addition to Application Number :NA
Filing Date :NA
(62) Divisional to Application Number :NA
Filing Date :NA

(71)**Name of Applicant :**
1)CORNING INCORPORATED
Address of Applicant :1 Riverfront Plaza Corning New York 14831 U.S.A.
(72)**Name of Inventor :**
1)COOK Glen Bennett
2)HRDINA Kenneth E
3)THOMAS Christopher S
4)WIGHT John Forrest Jr

(57) Abstract :
The disclosure relates to vessels configured to contain molten semiconducting materials. The vessels include a high purity fused silica lining having a base and sidewalls that define an interior volume and a fused silica backing proximate the external surfaces of the lining.

No. of Pages : 17 No. of Claims : 20

(12) PATENT APPLICATION PUBLICATION
(19) INDIA
(22) Date of filing of Application :07/10/2013
(21) Application No.8664/DELNP/2013 A
(43) Publication Date : 19/12/2014

(54) Title of the invention : PUNCHING DEVICE WITH ILLUMINATED RECEIVING PLATE

(51) International classification :G01N1/28,G01N35/02
(31) Priority Document No :10 2011 075 039.8
(32) Priority Date :29/04/2011
(33) Name of priority country :Germany
(86) International Application No :PCT/EP2012/057874
Filing Date :29/04/2012
(87) International Publication No :WO 2012/146772
(61) Patent of Addition to Application Number :NA
Filing Date :NA
(62) Divisional to Application Number :NA
Filing Date :NA

(71)**Name of Applicant :**
1)HAMILTON BONADUZ AG
Address of Applicant :Via Crusch 8 CH 7402 Bonaduz Switzerland
(72)**Name of Inventor :**
1)GIOVANOLI Nando
2)MENZI Reto

(57) Abstract :
The invention relates to a punching device for processing samples in particular dried samples applied to a sample card preferably liquids containing DNA such as blood saliva and the like comprising at least one punching means (110) with a punch and a lower die wherein the punch is movable between a resting position at a distance from the lower die and a punching position closer to the lower die and wherein the punching means (110) has a receiving opening into which a sample card can be introduced by means of a movable gripping unit (300) of the punching device (10) and can be positioned in relation to the punching means (110) and a punching drive (14) which can be coupled or is coupled to the punch of the punching means (110) and which drives the punch between the resting position and the punching position. The punching means (110) is designed in such a way that a piece of sample (274) punched out from the sample card can be discharged at an outlet opening of the lower die into a receiving recess (28) of a receiving container (12) arranged below the punching means (110). According to the invention it is proposed that it comprises a receiving plate (210) which supports the receiving container (12) and has a light source (212) illuminating at least part of the receiving plate (210) wherein the light source (212) is arranged in such a way that at least part of a receiving container (12) located on the receiving plate (210) in particular of receiving recesses (28) provided therein can be illuminated from the direction of the receiving plate (210) in particular from below. Furthermore the invention relates to a method for evaluating at least a result of a punching operation in particular by means of a punching device (10) according to the invention.

No. of Pages : 27 No. of Claims : 15

(12) PATENT APPLICATION PUBLICATION
(19) INDIA
(22) Date of filing of Application :07/10/2013
(21) Application No.8665/DELNP/2013 A
(43) Publication Date : 19/12/2014

(54) Title of the invention : PUNCHING DEVICE WITH RECEIVING PLATE

(51) International classification :G01N1/28,G01N35/04
(31) Priority Document No :10 2011 075 037.1
(32) Priority Date :29/04/2011
(33) Name of priority country :Germany
(86) International Application No :PCT/EP2012/057873
Filing Date :29/04/2012
(87) International Publication No :WO 2012/146771
(61) Patent of Addition to Application Number :NA
Filing Date :NA
(62) Divisional to Application Number :NA
Filing Date :NA

(71)**Name of Applicant :**
1)HAMILTON BONADUZ AG
Address of Applicant :Via Crusch 8 CH 7402 Bonaduz Switzerland
(72)**Name of Inventor :**
1)GIOVANOLI Nando
2)MENZI Reto

(57) Abstract :
The invention relates to a punching device for processing samples in particular dried samples applied to a sample card preferably liquids containing DNA such as blood saliva and the like comprising at least one punching means with a punch and a lower die the punch being movable between a resting position at a distance from the lower die and a punching position closer to the lower die. The punching means has a receiving opening into which a sample card can be introduced by means of a movable gripping unit of the punching device and can be positioned in relation to the punching means and a punching drive which can be coupled or is coupled to the punch of the punching means and which drives the movement of the punch between the resting position and the punching position the punching means being designed in such a way that a piece of sample punched out from the sample card can be discharged at an outlet opening of the lower die into a receiving recess of a receiving container (12) arranged underneath the punching means. According to the invention the punching device has a receiving plate (210) which forms a cover of an outwardly sealed housing (220) for a drive unit (230) by which a transport frame (214) resting on the receiving plate (210) is moved in relation to the punching means (110) in the plane of the plate.

No. of Pages : 25 No. of Claims : 10

(12) PATENT APPLICATION PUBLICATION
(19) INDIA
(22) Date of filing of Application :07/10/2013
(21) Application No.8703/DELNP/2013 A
(43) Publication Date : 19/12/2014

(54) Title of the invention : DAIRY BASED SHELF LIFE EMULSION

(51) International classification :A23L1/035
(31) Priority Document No :61/450447
(32) Priority Date :08/03/2011
(33) Name of priority country :U.S.A.
(86) International Application No :PCT/CA2012/050133
Filing Date :06/03/2012
(87) International Publication No :WO 2012/119252
(61) Patent of Addition to Application Number :NA
Filing Date :NA
(62) Divisional to Application Number :NA
Filing Date :NA

(71)**Name of Applicant :**
1)MURDOCH ADVANCING FOOD SCIENCE AND SAFETY INC.
Address of Applicant :TD Centre Suite 300 1791 Barrington Street Halifax Nova Scotia B3J 3K9 Canada
(72)**Name of Inventor :**
1)QUIGLEY John Jason Scott

(57) Abstract :
The present invention is directed to advancing food safety with a food shelf life extending emulsification matrix a method for making such oil in water emulsification matrix by high shear homogenization with added acid dairy products egg whites starches gums and preservatives. The emulsification matrix thus created can be used as substitute for mayonnaise or sauces dips dressings and applied as a food shelf life extender to food suitable for coating by an emulsion mixture. Preferably the coating is prepared and applied under an inert gas blanket from a class of edible inert gases including nitrogen or argon. This food shelf life extending emulsification matrix can be applied to any form of prepared protein including meats fish/ seafood poultry eggs as well as fruits vegetables or home meal replacement (HMR) applications and other ready to eat (RTE) chilled prepared food products; including those stored in a refrigerated; or alternatively frozen environment subsequently slacked out/ thawed.

No. of Pages : 20 No. of Claims : 18

(12) PATENT APPLICATION PUBLICATION
(19) INDIA
(22) Date of filing of Application :07/10/2013
(21) Application No.8705/DELNP/2013 A
(43) Publication Date : 19/12/2014

(54) Title of the invention : NUTRITIONAL COMPOSITIONS INCLUDING BRANCHED CHAIN FATTY ACIDS FOR WOUND HEALING

(51) International classification	:A61K31/20,A61K31/201,A61K31/202
(31) Priority Document No	:61/474452
(32) Priority Date	:12/04/2011
(33) Name of priority country	:U.S.A.
(86) International Application No	:PCT/EP2012/056645
Filing Date	:12/04/2012
(87) International Publication No	:WO 2012/140118
(61) Patent of Addition to Application Number	:NA
Filing Date	:NA
(62) Divisional to Application Number	:NA
Filing Date	:NA

(71)**Name of Applicant :**
1)NESTEC S.A.
Address of Applicant :Av. Nestl 55 CH 1800 Vevey Switzerland
(72)**Name of Inventor :**
1)GREENBERG Norman Alan

(57) Abstract :
Nutritional compositions for improving treating and/or preventing various medical conditions and methods of using same are provided. The medical conditions may include wounds mucositis among others. The nutritional compositions include branched chain fatty acids and may include other functional ingredients such as but not limited to probiotics nucleotides and amino acids. Methods of administering such nutritional products to individuals in need of same are also provided.

No. of Pages : 30 No. of Claims : 33

(12) PATENT APPLICATION PUBLICATION
(19) INDIA
(22) Date of filing of Application :07/10/2013
(21) Application No.8706/DELNP/2013 A
(43) Publication Date : 19/12/2014

(54) Title of the invention : METHODS FOR REGULATING SIRTUIN GENE EXPRESSION

(51) International classification :A01N65/00
(31) Priority Document No :61/517228
(32) Priority Date :15/04/2011
(33) Name of priority country :U.S.A.
(86) International Application No :PCT/US2012/030509
Filing Date :26/03/2012
(87) International Publication No :WO 2012/141876
(61) Patent of Addition to Application Number :NA
Filing Date :NA
(62) Divisional to Application Number :NA
Filing Date :NA

(71)**Name of Applicant :**
1)NESTEC S.A.
Address of Applicant :Avenue Nestle 55 CH 1800 Vevey Switzerland
(72)**Name of Inventor :**
1)PAN Yuanlong
2)MIDDLETON Rondo Paul

(57) Abstract :
The invention provides methods useful for regulating sirtuin gene expression mimicking caloric restriction preventing and treating Alzheimer s disease increasing longevity and retarding aging in an animal. The methods comprise administering one or more isoflavones to the animals preferably in amounts of from about 0.001 to about 10 g/kg/day.

No. of Pages : 25 No. of Claims : 120

(12) PATENT APPLICATION PUBLICATION
(19) INDIA
(22) Date of filing of Application :07/10/2013
(21) Application No.8707/DELNP/2013 A
(43) Publication Date : 19/12/2014

(54) Title of the invention : JET PUMP FOR DELIVERING FUEL

(51) International classification :F02M37/02,F04F5/10,F04F5/46
(31) Priority Document No :10 2011 075 230.7
(32) Priority Date :04/05/2011
(33) Name of priority country :Germany
(86) International Application No:PCT/EP2012/053787
Filing Date :06/03/2012
(87) International Publication No :WO 2012/150059
(61) Patent of Addition to Application Number :NA
Filing Date :NA
(62) Divisional to Application Number :NA
Filing Date :NA

(71)**Name of Applicant :**
1)ROBERT BOSCH GMBH
Address of Applicant :Postfach 30 02 20 70442 Stuttgart Germany
(72)**Name of Inventor :**
1)MALEC Radek

(57) Abstract :
In a jet pump (22) for delivering fuel for a vehicle a pre filter for a nozzle (30) is formed in that a duct (47 50) is formed between the nozzle (30) and a receptacle (36) for the nozzle in a pump body the diameter of which duct is smaller than a diameter of a nozzle opening of the nozzle (30).

No. of Pages : 18 No. of Claims : 10

(12) PATENT APPLICATION PUBLICATION
(19) INDIA
(22) Date of filing of Application :07/10/2013
(21) Application No.8708/DELNP/2013 A
(43) Publication Date : 19/12/2014

(54) Title of the invention : METHODS AND MATERIALS FOR PROLONGING USEFUL STORAGE OF RED BLOOD CELL PREPARATIONS AND PLATELET PREPARATIONS

(51) International classification :A01N1/02,A61J1/05,C12N5/02
(31) Priority Document No :61/453455
(32) Priority Date :16/03/2011
(33) Name of priority country :U.S.A.
(86) International Application No :PCT/US2012/029510
Filing Date :16/03/2012
(87) International Publication No :WO 2012/125955
(61) Patent of Addition to Application Number :NA
Filing Date :NA
(62) Divisional to Application Number :NA
Filing Date :NA

(71)**Name of Applicant :**
1)MAYO FOUNDATION FOR MEDICAL EDUCATION AND RESEARCH
Address of Applicant :200 First Street S.W. Rochester Minnesota 55905 U.S.A.
2)DYNASIL BIOMEDICAL CORPORATION
(72)**Name of Inventor :**
1)JOYNER Michael J.
2)ERICSON Daniel Grant

(57) Abstract :
This document provides methods and materials for enhancing the storage capabilities of red blood cell preparations. For example methods and materials for using CO to store red blood cells in a manner that (a) reduces the level of glucose or 2 3 DPG consumption of or reduces the level of 2 3 DPG production by a red blood cell preparation (b) reduces the level of lactate formation by a red blood cell preparation and/or (c) reduces the pH level of a red blood cell preparation are provided. Such methods and materials can result in prolonging the useful lifespan of the red blood cells of the red blood cell preparation. This document also provides methods and materials involved in prolonging useful storage of platelet preparations. For example methods and materials for storing platelets in a manner that reduces platelet metabolism that preserves platelet function and/or that reduces the risk of bacterial contamination are provided.

No. of Pages : 53 No. of Claims : 51

(12) PATENT APPLICATION PUBLICATION
(19) INDIA
(22) Date of filing of Application :07/10/2013
(21) Application No.8712/DELNP/2013 A
(43) Publication Date : 19/12/2014

(54) Title of the invention : LOAD BALANCING SCTP ASSOCIATIONS USING VTAG MEDIATION

(51) International classification :H04L29/08
(31) Priority Document No :13/044128
(32) Priority Date :09/03/2011
(33) Name of priority country :U.S.A.
(86) International Application No :PCT/IB2012/051096
Filing Date :08/03/2012
(87) International Publication No :WO 2012/120473
(61) Patent of Addition to Application Number :NA
Filing Date :NA
(62) Divisional to Application Number :NA
Filing Date :NA

(71)**Name of Applicant :**
1)TELEFONAKTIEBOLAGET LM ERICSSON (PUBL)
Address of Applicant :S 164 83 Stockholm Sweden
2)TREMBLAY Richard
(72)**Name of Inventor :**
1)CHATILLA Abdallah

(57) Abstract :
Presented is a system and methods for routing Stream Control Transmission Protocol (SCTP) between a client and a back end server by a front end server operating transparently between the client and the back end server. The front end server uses a distribution key created by the front end server to route the SCTP packets to the proper destination. The distribution key is comprised of a client SCTP port number a back end server SCTP port number and a back end server Initiate Tag. The front end server arbitrates clashes between distribution keys of different back end servers by replacing the back end server generated SCTP Initiate Tag with a front end server generated SCTP Initiate Tag.

No. of Pages : 36 No. of Claims : 17

(12) PATENT APPLICATION PUBLICATION
(19) INDIA
(22) Date of filing of Application :07/10/2013
(21) Application No.8713/DELNP/2013 A
(43) Publication Date : 19/12/2014

(54) Title of the invention : BCMA BASED STRATIFICATION AND THERAPY FOR MULTIPLE MYELOMA PATIENTS

(51) International classification :A61K39/395,C07K16/28,G01N33/574
(31) Priority Document No:11163558.7
(32) Priority Date :21/04/2011
(33) Name of priority country :EPO
(86) International Application No :PCT/EP2012/057248
Filing Date :20/04/2012
(87) International Publication No :WO 2012/143498
(61) Patent of Addition to Application Number :NA
Filing Date :NA
(62) Divisional to Application Number :NA
Filing Date :NA

(71)**Name of Applicant :**
1)BOEHRINGER INGELHEIM INTERNATIONAL GMBH
Address of Applicant :Binger Strasse 173 55216 Ingelheim Am Rhein Germany
(72)**Name of Inventor :**
1)BORGES Eric
2)HEBEIS Jasmin Barbara

(57) Abstract :
The present invention relates to methods for the stratification of a multiple myeloma (MM) patient comprising determining whether or not B cells preferably malignant B cells of said patient express BCMA protein on their surface. Also methods for selecting an antibody based multiple myeloma (MM) therapy is based on whether or not BCMA is expressed on the cell surface of B cells preferably malignant B cells of a patient. Furthermore antibody based therapies for patients who have BCMA positive malignant B cells are provided.

No. of Pages : 52 No. of Claims : 13

(12) PATENT APPLICATION PUBLICATION
(19) INDIA
(22) Date of filing of Application :07/10/2013
(21) Application No.8715/DELNP/2013 A
(43) Publication Date : 19/12/2014

(54) Title of the invention : FIBER TRANSPARENCY TESTING METHOD AND APPARATUS

(51) International classification :G01N21/59,G01N21/01
(31) Priority Document No :NA
(32) Priority Date :NA
(33) Name of priority country :NA
(86) International Application No :PCT/CN2011/002162
Filing Date :22/12/2011
(87) International Publication No :WO 2013/091146
(61) Patent of Addition to Application Number :NA
Filing Date :NA
(62) Divisional to Application Number :NA
Filing Date :NA

(71)**Name of Applicant :**
1)HONEYWELL INTERNATIONAL INC.
Address of Applicant :101 Columbia Avenue P.O. Box 2245 Morristown NJ 07962 9806 U.S.A.
(72)**Name of Inventor :**
1)SHEN Yanming
2)XU Hongyan
3)LI Haohua

(57) Abstract :
Polymeric fibers may be tested for optical properties; such as transparency in a manner that provides reproducible test results. A holder be used that is configured to hold polymeric fibers in a stacked single file manner in which the polymeric fibers are held closely together. The fibers may be tested using an optical apparatus employing an integrating sphere.

No. of Pages : 20 No. of Claims : 19

(12) PATENT APPLICATION PUBLICATION
(19) INDIA
(22) Date of filing of Application :07/10/2013
(21) Application No.8716/DELNP/2013 A
(43) Publication Date : 19/12/2014

(54) Title of the invention : PORTABLE WORK SCREEN WITH AT LEAST TWO SUPPORTS COMPRISING MAGNETS AND A SEMI RIGID SCREEN

(51) International classification	:B23K37/00,B23K9/32,B23Q11/08
(31) Priority Document No	:11275060.9
(32) Priority Date	:07/04/2011
(33) Name of priority country	:EPO
(86) International Application No	:PCT/GB2012/050626
Filing Date	:22/03/2012
(87) International Publication No	:WO 2012/136979
(61) Patent of Addition to Application Number	:NA
Filing Date	:NA
(62) Divisional to Application Number	:NA
Filing Date	:NA

(71)**Name of Applicant :**
1)BAE SYSTEMS PLC
Address of Applicant :6 Carlton Gardens London SW1Y 5AD U.K.
(72)**Name of Inventor :**
1)PHILLIPS Mark Wayne
2)SPENCELY William Brian

(57) Abstract :
A portable work screen apparatus includes a semi rigid screen (10) and at least two supports comprising an attachment device (15) said attachment device (15) comprising a magnet (25) for in use releasably connecting the screen to a surface proximal to a workpiece wherein said at least two supports are spaced apart such that in use said screen (10) is extending therebetween and is flexed to a desired configuration.

No. of Pages : 12 No. of Claims : 12

(12) PATENT APPLICATION PUBLICATION
(19) INDIA
(22) Date of filing of Application :07/10/2013
(21) Application No.8717/DELNP/2013 A
(43) Publication Date : 19/12/2014

(54) Title of the invention : RARE EARTH METAL COMPLEX HAVING PHENANTHROLINE COMPOUND AS LIGAND

(51) International classification :C07F5/00
(31) Priority Document No :61/451904
(32) Priority Date :11/03/2011
(33) Name of priority country :U.S.A.
(86) International Application No :PCT/JP2012/001707
Filing Date :12/03/2012
(87) International Publication No :WO 2012/124310
(61) Patent of Addition to Application Number :NA
Filing Date :NA
(62) Divisional to Application Number :NA
Filing Date :NA

(71)**Name of Applicant :**
1)B.R.A.H.M.S GmbH
Address of Applicant :Neuendorfstrasse 25 16761 Hennigsdorf Germany
(72)**Name of Inventor :**
1)HOSHINO Mikio
2)YANO Toshisada
3)YAMANAKA Yasukazu

(57) Abstract :
The present invention provides a rare earth metal complex represented by the following formula (I).

No. of Pages : 44 No. of Claims : 4

(12) PATENT APPLICATION PUBLICATION
(19) INDIA
(22) Date of filing of Application :07/10/2013
(21) Application No.8718/DELNP/2013 A
(43) Publication Date : 19/12/2014

(54) Title of the invention : METHOD FOR EGFR DIRECTED COMBINATION TREATMENT OF CANCER

(51) International classification :A61K45/00,A61K39/395
(31) Priority Document No :11166446.2
(32) Priority Date :17/05/2011
(33) Name of priority country :EPO
(86) International Application No :PCT/EP2012/059098
Filing Date :16/05/2012
(87) International Publication No :WO 2012/156437
(61) Patent of Addition to Application Number :NA
Filing Date :NA
(62) Divisional to Application Number :NA
Filing Date :NA

(71)**Name of Applicant :**
1)BOEHRINGER INGELHEIM INTERNATIONAL GMBH
Address of Applicant :Binger Strasse 173 55216 Ingelheim Am Rhein Germany
(72)**Name of Inventor :**
1)DENIS Louis
2)LORENCE Robert
3)SHAHIDI Mehdi
4)SOLCA Flavio

(57) Abstract :
The present invention relates to a method of treating patients suffering from cancers driven by deregulated Human Epidermal Growth Factor Receptor (HER/Human EGFR) wherein an irreversible tyrosine kinase inhibitor (TKI) is administered according to a continuous regimen based on an average daily dose in the range of 10 to 50 mg and the mAB is co administered according to a dosing regimen ranging from an average weeklyiv dose of 50 to 500 mg/m repeated thrice twice or once a week once in two weeks once in three weeks or at least monthly to a patient in need of such treatment.

No. of Pages : 46 No. of Claims : 35

(12) PATENT APPLICATION PUBLICATION
(19) INDIA
(22) Date of filing of Application :07/10/2013
(21) Application No.8666/DELNP/2013 A
(43) Publication Date : 19/12/2014

(54) Title of the invention : PUNCHING DEVICE WITH MODULAR PUNCHING MEANS

(51) International classification :G01N1/28,G01N35/00,B26F1/02
(31) Priority Document No :10 2011 075 035.5
(32) Priority Date :29/04/2011
(33) Name of priority country :Germany
(86) International Application No :PCT/EP2012/057871
Filing Date :29/04/2012
(87) International Publication No :WO 2012/146769
(61) Patent of Addition to Application Number :NA
Filing Date :NA
(62) Divisional to Application Number :NA
Filing Date :NA

(71)**Name of Applicant :**
1)HAMILTON BONADUZ AG
Address of Applicant :Via Crusch 8 CH 7402 Bonaduz Switzerland
(72)**Name of Inventor :**
1)GIOVANOLI Nando
2)MENZI Reto

(57) Abstract :
The invention relates to a punching device for processing dried samples applied to a sample card in particular liquids containing DNA such as blood saliva and the like comprising at least one punching means (110) with a punch and a lower die wherein the punch is movable between a resting position at a distance from the lower die and a punching position closer to the lower die. The punching means (110) has a receiving opening into which a sample card can be introduced by means of a movable gripping unit (300) of the punching device (10) and can be positioned in relation to the punching means (110) and a punching drive (14) which can be coupled or is coupled to the punch of the punching means (110) and which drives the punch between the resting position and the punching position. According to the invention it is proposed that the punching means (110) has a structure which is separate from the punching device (10) and on which the punch and the lower die are arranged. The punching means (110) is configured in terms of its structure in such a way that it forms an exchangeable module that can be coupled to the punching device (10) and the punching drive (14). The invention also relates to a metering device (500) with said type of punching device (10) and also a punching means module (110).

No. of Pages : 27 No. of Claims : 17

(12) PATENT APPLICATION PUBLICATION
(19) INDIA
(22) Date of filing of Application :07/10/2013
(21) Application No.8667/DELNP/2013 A
(43) Publication Date : 19/12/2014

(54) Title of the invention : PUNCHING DEVICE WITH GRIPPING UNIT

(51) International classification :G01N1/28,G01N35/00,B25J9/00
(31) Priority Document No :10 2011 075 036.3
(32) Priority Date :29/04/2011
(33) Name of priority country :Germany
(86) International Application No :PCT/EP2012/057872
Filing Date :29/04/2012
(87) International Publication No :WO 2012/146770
(61) Patent of Addition to Application Number :NA
Filing Date :NA
(62) Divisional to Application Number :NA
Filing Date :NA

(71)**Name of Applicant :**
1)HAMILTON BONADUZ AG
Address of Applicant :Via Crusch 8 CH 7402 Bonaduz Switzerland
(72)**Name of Inventor :**
1)GIOVANOLI Nando
2)MENZI Reto

(57) Abstract :
The invention relates to a punching device for processing samples in particular dried samples applied to a sample card preferably liquids containing DNA such as blood saliva and the like comprising at least one punching means with a punch and a lower die wherein the punch is movable between a resting position at a distance from the lower die and a punching position closer to the lower die. The punching means has a receiving opening into which a sample card from a sample card container can be introduced by means of a movable gripping unit (300) of the punching device and can be positioned in relation to the punching means and a punching drive which can be coupled or is coupled to the punch of the punching means and which drives the punch between the resting position and the punching position. The punching means is designed in such a way that a piece of sample punched out from the sample card can be discharged at an outlet opening of the lower die into a receiving recess of a receiving container arranged below the punching means. According to the invention it is proposed that the gripping unit (300) comprises a sample card gripping means (310) and a receiving container gripping means (350) which are jointly movable by means of a drive unit in three mutually orthogonal main directions (X Y Z).

No. of Pages : 25 No. of Claims : 12

(12) PATENT APPLICATION PUBLICATION
(19) INDIA
(22) Date of filing of Application :08/10/2013
(21) Application No.8720/DELNP/2013 A
(43) Publication Date : 19/12/2014

(54) Title of the invention : APPARATUS AND METHOD FOR EFFICIENT DC TO DC CONVERSION THROUGH WIDE VOLTAGE SWINGS

(51) International classification :H02M3/335
(31) Priority Document No :13/069251
(32) Priority Date :22/03/2011
(33) Name of priority country :U.S.A.
(86) International Application No :PCT/US2012/029996
Filing Date :21/03/2012
(87) International Publication No :WO 2012/129337
(61) Patent of Addition to Application Number :NA
Filing Date :NA
(62) Divisional to Application Number :NA
Filing Date :NA

(71)**Name of Applicant :**
1)LEDILLION TECHNOLOGIES INC.
Address of Applicant :61 Parker Ave Atherton California 94027 U.S.A.
(72)**Name of Inventor :**
1)KASSAYAN Reza

(57) Abstract :
A DC to DC converter includes two or more inductors coupled to a common core and two or more active switches where at least one active switch is in an input current path. A controller operates the two or more active switches such that a DC input is driven through one or more of the two or more inductors to implement a power conversion operation.

No. of Pages : 31 No. of Claims : 20

(12) PATENT APPLICATION PUBLICATION
(19) INDIA
(22) Date of filing of Application :08/10/2013
(21) Application No.8721/DELNP/2013 A
(43) Publication Date : 19/12/2014

(54) Title of the invention : PROCESS FOR MANUFACTURING A ONE PIECE AXISYMMETRIC METALLIC PART FROM COMPOSITE FIBROUS STRUCTURES

(51) International classification :B22F3/15,C22C47/04,C22C47/06
(31) Priority Document No :1152129
(32) Priority Date :15/03/2011
(33) Name of priority country :France
(86) International Application No :PCT/FR2012/050550
Filing Date :15/03/2012
(87) International Publication No :WO 2012/123686
(61) Patent of Addition to Application Number :NA
Filing Date :NA
(62) Divisional to Application Number :NA
Filing Date :NA

(71)**Name of Applicant :**
1)SNECMA
Address of Applicant :socit anonyme 2 Boulevard du Gnral Martial Valin F 75015 Paris France
(72)**Name of Inventor :**
1)GODON Thierry
2)DAMBRINE Bruno Jacques Grard

(57) Abstract :
The process consists in manufacturing a one piece axisymmetric part by superposition around a rotating cylindrical mandrel (2) of at least two respectively inner (7) and outer (14) metal coated composite fibrous structures wound in first and second crossed directions on said mandrel and in arranging between the crossed inner (7) and outer (14) fibrous structures at least one layer of metallic wire (11) then in placing the blank (E) of said part formed by the fibrous structures (7 14) and the layer of metallic wire (11) in a tool in order to apply to the blank a hot isostatic pressing treatment and to obtain said part.

No. of Pages : 14 No. of Claims : 10

(12) PATENT APPLICATION PUBLICATION
(19) INDIA
(22) Date of filing of Application :04/10/2013
(21) Application No.8656/DELNP/2013 A
(43) Publication Date : 19/12/2014

(54) Title of the invention : PROCESS FOR CONVERTING GLYCERIN INTO PROPYLENE GLYCOL

(51) International classification :C07C29/74,B01J8/02
(31) Priority Document No :61/451246
(32) Priority Date :10/03/2011
(33) Name of priority country :U.S.A.
(86) International Application No :PCT/US2012/028732
Filing Date :12/03/2012
(87) International Publication No :WO 2012/122566
(61) Patent of Addition to Application Number :NA
Filing Date :NA
(62) Divisional to Application Number :NA
Filing Date :NA

(71)**Name of Applicant :**
1)GTC TECHNOLOGY US LLC
Address of Applicant :1001 S. Dairy Ashford Suite 500 Houston TX 77077 U.S.A.
(72)**Name of Inventor :**
1)DING Zhongyi
2)CHIU Joseph
3)JIN Weihua

(57) Abstract :
A process to convert glycerin into propylene glycol and purifying the produced propylene glycol is described. The glycerin based propylene glycol production requires only one process step compared to petroleum/natural gas based propylene glycol production requires multiple process steps and thus represents a cost savings.

No. of Pages : 12 No. of Claims : 11

(12) PATENT APPLICATION PUBLICATION
(19) INDIA
(22) Date of filing of Application :04/10/2013
(21) Application No.8657/DELNP/2013 A
(43) Publication Date : 19/12/2014

(54) Title of the invention : TRANSVERSE DRIVEN ROLLER BELT AND CONVEYOR

(51) International classification :B65G17/24
(31) Priority Document No :13/044981
(32) Priority Date :10/03/2011
(33) Name of priority country :U.S.A.
(86) International Application No :PCT/US2012/027805
Filing Date :06/03/2012
(87) International Publication No :WO 2012/122138
(61) Patent of Addition to Application Number :NA
Filing Date :NA
(62) Divisional to Application Number :NA
Filing Date :NA

(71)**Name of Applicant :**
1)LAITRAM L.L.C.
Address of Applicant :Legal Department 200 Laitram Lane Harahan Louisiana 70123 U.S.A.
(72)**Name of Inventor :**
1)FOURNEY Matthew L.

(57) Abstract :
A transverse roller conveyor belt (58) and a conveyor system (56) providing a drive mechanism (60) for driving the rollers in the belt to divert conveyed articles. The conveyor belt includes belt rollers (18) that each engage a pair of smaller diameter article conveying rollers (30). The conveyor system s drive mechanism (60) when selectively actuated rotates the belt rollers (18) which rotate the article supporting rollers (30) to divert conveyed articles toward or off the side of the belt. Gaps between at least some of the pairs of article supporting rollers admit the teeth (74) of a transfer comb (73) to strip remaining articles off the downstream end of the belt.

No. of Pages : 12 No. of Claims : 14

(12) PATENT APPLICATION PUBLICATION
(19) INDIA
(22) Date of filing of Application :04/10/2013
(21) Application No.8658/DELNP/2013 A
(43) Publication Date : 19/12/2014

(54) Title of the invention : BICARBONATE-BASED SOLUTIONS FOR DIALYSIS THERAPIES

(51) International classification :A61K 33/14
(31) Priority Document No :10/044,234
(32) Priority Date :11/01/2002
(33) Name of priority country :U.S.A.
(86) International Application No :PCT/US2002/035322
Filing Date :04/11/2002
(87) International Publication No :WO 03/059417
(61) Patent of Addition to Application Number :NA
Filing Date :NA
(62) Divisional to Application Number :1332/DELNP/2003
Filed on :04/11/2002

(71)**Name of Applicant :**
1)BAXTER INTERNATIONAL INC.
Address of Applicant :One Baxter Parkway, DF3-3E Deerfield, IL 60015, USA U.S.A.
(72)**Name of Inventor :**
1)ELISABETTINI Paola
2)MENNEGUERRE Jean-Paul
3)COLAS Jerome
4)RENAUX Christian
5)DIVINO Jose
6)FAICT Dirk
7)WILMET Isabelle

(57) Abstract :
The present invention relates to a two part dialysis solution. The solution includes the following: a first component comprising a bicarbonate concentrate; a second component comprising an electrolyte concentrate; and each of the first component and the second component including a physiologically acceptable amount of sodium. The dialysis solution does not contain acetate, and the first component and the second component are separately stored from each other until mixed together to form a mixed solution. The first component is stored in a first chamber of the multi-chamber container and the second component is stored in a second chamber of the multi-chamber container. The first chamber includes an exit port through which the first component is capable of being in direct fluid communication with a patient prior to mixing and the second component is not in direct fluid communication with the exit port prior to mixing.

No. of Pages : 20 No. of Claims : 14

(12) PATENT APPLICATION PUBLICATION
(19) INDIA
(22) Date of filing of Application :04/10/2013
(21) Application No.8659/DELNP/2013 A
(43) Publication Date : 19/12/2014

(54) Title of the invention : SEAT CUSHION HAVING AN ELECTROSPUN NONWOVEN POLYMER LAYER

(51) International classification :B29D99/00,D04H1/728,B29C44/12
(31) Priority Document No :61/472482
(32) Priority Date :06/04/2011
(33) Name of priority country :U.S.A.
(86) International Application No :PCT/US2012/032374
Filing Date :05/04/2012
(87) International Publication No :WO 2012/154339
(61) Patent of Addition to Application Number :NA
Filing Date :NA
(62) Divisional to Application Number :NA
Filing Date :NA

(71)**Name of Applicant :**
1)JOHNSON CONTROLS TECHNOLOGY COMPANY
Address of Applicant :915 E. 32nd Street Holland Michigan 49423 U.S.A.
(72)**Name of Inventor :**
1)ELENBAAS Frances A.
2)MICHALAK Eric B.
3)LAFRAMBOISE Gregg

(57) Abstract :
According to various embodiments a seat cushion includes an electrospun nonwoven polymer layer. The seat cushion may be prepared by melting a polymer electrospinning the polymer onto a mold lid to form the nonwoven polymer layer injecting a foam into the mold and closing the mold lid such that the foam and the nonwoven polymer layer bond as the foam expands.

No. of Pages : 19 No. of Claims : 20

(12) PATENT APPLICATION PUBLICATION
(19) INDIA
(22) Date of filing of Application :08/10/2013
(21) Application No.8730/DELNP/2013 A
(43) Publication Date : 19/12/2014

(54) Title of the invention : DEVICE FOR FIXING A THREAD ON A SPINDLE BEFORE DOFFING

(51) International classification :D01H1/38,D01H9/16
(31) Priority Document No :NA
(32) Priority Date :NA
(33) Name of priority country :NA
(86) International Application No :PCT/RU2011/000230
Filing Date :07/04/2011
(87) International Publication No :WO 2012/138245
(61) Patent of Addition to Application Number :NA
Filing Date :NA
(62) Divisional to Application Number :NA
Filing Date :NA

(71)**Name of Applicant :**
1)PINTER S. A.
Address of Applicant :Ctra. De Manresa a Santpedor Km. 46. E 08251 Santpedor Spain
(72)**Name of Inventor :**
1)KURKOV Vladimir Vasilievich

(57) Abstract :
The invention relates to the textile industry and concerns a spindle of an annular spinning and twisting frame. The device (figure 1) comprises a toothed wheel (1) having teeth (2) for grasping a thread (6) a clamping crown (4) having teeth (5) arranged between the teeth (2) of the toothed wheel (1) in the same plane therewith and knives (7 or 14 or 17) wherein the clamping crown (4) is fixed on the spindle so as to be able to rotate and fix the thread (6) in a vertical gap between a pair of opposite lateral working surfaces of the teeth (2 and 5) of the toothed wheel (1) and clamping crown (4).

No. of Pages : 15 No. of Claims : 7

(12) PATENT APPLICATION PUBLICATION
(19) INDIA
(22) Date of filing of Application :07/10/2013
(21) Application No.8709/DELNP/2013 A
(43) Publication Date : 19/12/2014

(54) Title of the invention : ELECTROMAGNETIC SPECTRALLY DETECTABLE PLASTIC PACKAGING COMPONENTS

(51) International classification :B65D83/00,G01V15/00,B29C45/00
(31) Priority Document No :61/467811
(32) Priority Date :25/03/2011
(33) Name of priority country:U.S.A.
(86) International Application No :PCT/US2012/030249
Filing Date :23/03/2012
(87) International Publication No :WO 2012/134981
(61) Patent of Addition to Application Number :NA
Filing Date :NA
(62) Divisional to Application Number :NA
Filing Date :NA

(71)**Name of Applicant :**
1)ILLINOIS TOOL WORKS INC.
Address of Applicant :3600 West Lake Avenue Glenview Illinois 60026 U.S.A.
(72)**Name of Inventor :**
1)MARTIN Robert H.
2)PRICE II William A.
3)BRUCE John Gregory
4)JORDAN Darlynn Phillips
5)STEARNS Craig Martin

(57) Abstract :
A plastic packaging component is provided that is formed of a resin containing an electromagnetic spectrally detectable additive mixed with the resin. The resin formed into a plastic packaging component of an aerosol package lid an aerosol spray button an aerosol spray tube a trigger sprayer an integrated lid sprayer a grease cartridge a grease cap plastic fiber toweling a packaging strap a pail lid a jar cap or a brush. A process for detecting a displaced packaging component in an organic production stream is provided that includes adding to a resin an electromagnetically detectable additive intermixed with the resin and forming the additive loaded resin into the plastic packaging component. The production stream is then scanned for the detectable signal of the additive. Upon detecting the additive an alarm signal is provided that the production stream contains the displaced packaging component.

No. of Pages : 16 No. of Claims : 20

(12) PATENT APPLICATION PUBLICATION
(19) INDIA
(22) Date of filing of Application :08/10/2013
(21) Application No.8735/DELNP/2013 A
(43) Publication Date : 19/12/2014

(54) Title of the invention : GENERATION OF POLYOLS FROM SACCHARIDES

(51) International classification :C07C29/157,C07C31/26,B01J23/40
(31) Priority Document No :13/192907
(32) Priority Date :28/07/2011
(33) Name of priority country :U.S.A.
(86) International Application No :PCT/US2012/045343
Filing Date :03/07/2012
(87) International Publication No :WO 2013/015955
(61) Patent of Addition to Application Number :NA
Filing Date :NA
(62) Divisional to Application Number :NA
Filing Date :NA

(71)**Name of Applicant :**
1)UOP LLC
Address of Applicant :25 East Algonquin Road P. O. Box 5017 Des Plaines Illinois 60017 5017 U.S.A.
(72)**Name of Inventor :**
1)CHEN John Q.
2)KALNES Tom N.
3)KOCAL Joseph A.

(57) Abstract :
A process for generating at least one polyol from a feedstock comprising saccharide is performed in a continuous or batch manner. The process involves contacting hydrogen water and a feedstock comprising saccharide with a catalyst system to generate an effluent stream comprising at least one polyol and recovering the polyol from the effluent stream. The catalyst system comprises at least one unsupported component and at least one supported component.

No. of Pages : 24 No. of Claims : 10

(12) PATENT APPLICATION PUBLICATION
(19) INDIA
(22) Date of filing of Application :08/10/2013
(21) Application No.8736/DELNP/2013 A
(43) Publication Date : 19/12/2014

(54) Title of the invention : AN AQUEOUS DISPERSIBLE POLYMER COMPOSITION

(51) International classification :C09D175/00,C09D167/02,C09D5/00
(31) Priority Document No :1112324.7
(32) Priority Date :18/07/2011
(33) Name of priority country :U.K.
(86) International Application No :PCT/SG2012/000256
Filing Date :18/07/2012
(87) International Publication No :WO 2013/012394
(61) Patent of Addition to Application Number :NA
Filing Date :NA
(62) Divisional to Application Number :NA
Filing Date :NA

(71)**Name of Applicant :**
1)NIPSEA TECHNOLOGIES PTE LTD
Address of Applicant :16 Joo Koon Crescent Singapore 629018 Singapore
(72)**Name of Inventor :**
1)WANG Shaofeng
2)LI Jingqiu
3)YE Xiaoqun
4)SUNDARARAJAN G.
5)DOU Zeling
6)SEOW Swee How

(57) Abstract :
The present disclosure relates to an aqueous dispersible polymer composition comprising: (a) at least one of:(i) a dendritic polymer in admixture with a hydrophilic functionalizing agent; and (ii) a hydrophilic functionalized dendrimer; and (b) a non dendritic polymer capable of forming bonds with said dendritic polymer to thereby form a dendrimer non dendrimer (DND) polymer hybrid that is dispersible in the aqueous phase methods of forming the same and uses thereof.

No. of Pages : 46 No. of Claims : 20

(12) PATENT APPLICATION PUBLICATION
(19) INDIA
(22) Date of filing of Application :08/10/2013
(21) Application No.8738/DELNP/2013 A
(43) Publication Date : 19/12/2014

(54) Title of the invention : EXHAUST GAS PURIFICATION DEVICE AND EXHAUST GAS PURIFICATION METHOD USING SAME

(51) International classification	:F01N3/10,B01D53/94,B01J27/055
(31) Priority Document No	:2011086450
(32) Priority Date	:08/04/2011
(33) Name of priority country	:Japan
(86) International Application No	:PCT/JP2012/059309
Filing Date	:05/04/2012
(87) International Publication No	:WO 2012/137857
(61) Patent of Addition to Application Number	:NA
Filing Date	:NA
(62) Divisional to Application Number	:NA
Filing Date	:NA

(71)**Name of Applicant :**
1)KABUSHIKI KAISHA TOYOTA CHUO KENKYUSHO
Address of Applicant :41 1 Yokomichi Nagakute shi Aichi 4801192 Japan
2)TOYOTA JIDOSHA KABUSHIKI KAISHA
(72)**Name of Inventor :**
1)YAMAZAKI Kiyoshi
2)SAKAKIBARA Yuji
3)OKAWARA Seiji

(57) Abstract :
Provided is an exhaust gas purification device that is provided with an oxidation catalyst for purifying by oxidizing particulate matter contained in the exhaust gas from an internal combustion engine and wherein the oxidation catalyst is provided with: a carrier comprising at least one metal salt selected from the group consisting of calcium sulfate and phosphate; and a silver containing substance carried on the carrier.

No. of Pages : 49 No. of Claims : 9

(12) PATENT APPLICATION PUBLICATION
(19) INDIA
(22) Date of filing of Application :08/10/2013
(21) Application No.8739/DELNP/2013 A
(43) Publication Date : 19/12/2014

(54) Title of the invention : LIQUID SOAPS WITH TRICLOCARBAN

(51) International classification :C11D17/08,C11D9/50,C11D9/00
(31) Priority Document No :NA
(32) Priority Date :NA
(33) Name of priority country :NA
(86) International Application No :PCT/CN2011/000905
Filing Date :27/05/2011
(87) International Publication No :WO 2012/162854
(61) Patent of Addition to Application Number :NA
Filing Date :NA
(62) Divisional to Application Number :NA
Filing Date :NA

(71)**Name of Applicant :**
1)COLGATE PALMOLIVE COMPANY
Address of Applicant :300 Park Avenue New York New York 10022 U.S.A.
(72)**Name of Inventor :**
1)SHI Manying
2)CHANG David

(57) Abstract :
An aqueous and liquid cleansing composition comprises a fatty acid soap a salt of a lauryl ether sulfate surfactant that is present in an amount that is at least 50% of the weight of the fatty acid soap a betaine surfactant that is present in an amount that is at least 23% of the weight of the fatty acid soap and at least 0.05% by weight of the composition of triclocarban. The lauryl ether sulfate and betaine surfactant in the specified amount in relation to the fatty acid soap amount keep the triclocarban from precipitating out of the composition.

No. of Pages : 10 No. of Claims : 15

(12) PATENT APPLICATION PUBLICATION
(19) INDIA
(22) Date of filing of Application :08/10/2013

(21) Application No.8722/DELNP/2013 A
(43) Publication Date : 19/12/2014

(54) Title of the invention : COMPOSITES FOR CONTROLLED RELEASE OF WELL TREATMENT AGENTS

(51) International classification :C09K8/536,C09K8/54,C09K8/80
(31) Priority Document No :13/094186
(32) Priority Date :26/04/2011
(33) Name of priority country :U.S.A.
(86) International Application No :PCT/US2012/034507
Filing Date :20/04/2012
(87) International Publication No :WO 2012/148819
(61) Patent of Addition to Application Number :NA
Filing Date :NA
(62) Divisional to Application Number :NA
Filing Date :NA

(71)**Name of Applicant :**
1)BAKER HUGHES INCORPORATED
Address of Applicant :2929 Allen Parkway Suite 2100 Houston Texas 77019 U.S.A.
(72)**Name of Inventor :**
1)GUPTA D.V. Satyanarayana

(57) Abstract :
A well treatment composite which allows for the slow release of one or more well treatment agents into a subterranean formation and/or a wellbore penetrating the formation has a nano sized calcined porous substrate (adsorbent) of high surface area onto which is applied the well treatment agent. The composites are suitable for use in such well treatment operations as hydraulic fracturing and sand control.

No. of Pages : 32 No. of Claims : 27

(12) PATENT APPLICATION PUBLICATION
(19) INDIA
(22) Date of filing of Application :08/10/2013
(21) Application No.8723/DELNP/2013 A
(43) Publication Date : 19/12/2014

(54) Title of the invention : CREASING ACCESSORY AND METHOD OF PROVIDING A CREASE IN A SUBSTRATE

(51) International classification :B31F1/08
(31) Priority Document No :1106279.1
(32) Priority Date :14/04/2011
(33) Name of priority country :U.K.
(86) International Application No :PCT/EP2012/055898
Filing Date :30/03/2012
(87) International Publication No :WO 2012/139910
(61) Patent of Addition to Application Number :NA
Filing Date :NA
(62) Divisional to Application Number :NA
Filing Date :NA

(71)**Name of Applicant :**
1)GUILLO CREASE LTD
Address of Applicant :5 Richmond Place Rutherglen Glasgow G73 3BA U.K.
(72)**Name of Inventor :**
1)COLLINS Craig

(57) Abstract :
The invention relates to an accessory used to crease substrate (10) such as paper or card in a guillotine assembly (16) making use of the guillotine assembly s in built clamping mode. The accessory includes a removable male portion (26) having an elongate protrusion (30) and a removable female portion (124) having a groove (32) therealong to receive the male portion therein. Attachment means such as a magnetic strip is provided to removably secure the male and female portions between the clamping arrangement (18) and a cutting bed (12). When the guillotine assembly is operated in a clamping movement the male and female portions of the creasing accessory coact to crease the substrate along a crease line. A kit comprising several female portions of different dimensions is also provided to make creases of different dimensions as required by the particular application and substrate properties.

No. of Pages : 18 No. of Claims : 18

(12) PATENT APPLICATION PUBLICATION
(19) INDIA
(22) Date of filing of Application :08/10/2013
(21) Application No.8724/DELNP/2013 A
(43) Publication Date : 19/12/2014

(54) Title of the invention : METHOD OF MANUFACTURING A COMPOSITE INSULATOR USING A RESIN WITH HIGH THERMAL PERFORMANCE

(51) International classification :H01B13/14,H01B3/40,H01B3/44
(31) Priority Document No :NA
(32) Priority Date :NA
(33) Name of priority country :NA
(86) International Application No :PCT/FR2011/050893
Filing Date :19/04/2011
(87) International Publication No :WO 2012/143620
(61) Patent of Addition to Application Number :NA
Filing Date :NA
(62) Divisional to Application Number :NA
Filing Date :NA

(71)**Name of Applicant :**
1)SEDIVER SOCIETE EUROPEENNE DISOLATEURS EN VERRE ET COMPOSITE
Address of Applicant :79 avenue Fran§ois Arago F 92017 Nanterre Cedex France
(72)**Name of Inventor :**
1)GEORGE Jean Marie
2)THEVENET Guy
3)PRAT Sandrine

(57) Abstract :
The method of manufacturing a composite insulator (1) for very high high or medium voltage comprising an insulating core (2) made of a synthetic material reinforced with glass fibres based on a mixture of a resin and of a hardener and an envelope (3) made of an elastomer material which vulcanizes at high temperature and surrounds said core (2) comprising at least the steps consisting in; choosing (41) a composition of mixture in such a way as to obtain a glass transition temperature for said synthetic material which is greater than the vulcanization temperature of said elastomer material and vulcanizing (45) said envelope (3) of elastomer material on said core (2) of synthetic material.

No. of Pages : 24 No. of Claims : 10

(12) PATENT APPLICATION PUBLICATION
(19) INDIA
(22) Date of filing of Application :08/10/2013
(21) Application No.8725/DELNP/2013 A
(43) Publication Date : 19/12/2014

(54) Title of the invention : CROSSFLOW FILTRATION CASSETTE HOLDER

(51) International classification :B01D63/08,B01D65/00
(31) Priority Document No :11503646
(32) Priority Date :27/04/2011
(33) Name of priority country :Sweden
(86) International Application No :PCT/SE2012/050433
Filing Date :25/04/2012
(87) International Publication No :WO 2012/148348
(61) Patent of Addition to Application Number :NA
Filing Date :NA
(62) Divisional to Application Number :NA
Filing Date :NA

(71)**Name of Applicant :**
1)GE HEALTHCARE BIO SCIENCES AB
Address of Applicant :Patent Department Bjrkgatan 30 S 751 84 Uppsala Sweden
(72)**Name of Inventor :**
1)…KERSTR–M Patrik
2)THANIKACHALAM Nirmal Kumar

(57) Abstract :
A robust crossflow filtration cassette holder allowing easy mounting and removal of filtration cassettes. The cassette holder comprises a distributor plate an end plate a plurality of essentially parallel tie rods connecting the distributor plate with the end plate and a compression plate slidably mounted on the tie rods between the distributor plate and the end plate wherein at least one of the tie rods is movable in its entirety between an open position or orientation allowing mounting or removal of a filtration cassette and a closed position or orientation in which the movable tie rod is in engaged connection with the cassette and locks it in the holder by a locking means.

No. of Pages : 17 No. of Claims : 15

(12) PATENT APPLICATION PUBLICATION
(19) INDIA
(22) Date of filing of Application :08/10/2013
(21) Application No.8726/DELNP/2013 A
(43) Publication Date : 19/12/2014

(54) Title of the invention : FLAME RETARDANT BLENDS FOR FLEXIBLE POLYURETHANE FOAMS

(51) International classification :C08G18/48,C08J9/00,C08K5/00
(31) Priority Document No :61/475361
(32) Priority Date :14/04/2011
(33) Name of priority country :U.S.A.
(86) International Application No :PCT/US2012/026482
Filing Date :24/02/2012
(87) International Publication No:WO 2012/161791
(61) Patent of Addition to Application Number :NA
Filing Date :NA
(62) Divisional to Application Number :NA
Filing Date :NA

(71)**Name of Applicant :**
1)CHEMTURA CORPORATION
Address of Applicant :199 Benson Road Middlebury CT 06749 U.S.A.
(72)**Name of Inventor :**
1)POWELL Carl H. Jr.
2)PHILLIPS Matthew D.
3)FALLOON Stephen B.

(57) Abstract :
A flame retardant blend comprises the following components: (a) at least one diester diol of a ring brominated aromatic compound; (b) at least one alkylated triphenylphosphate; and (c) at least one hindered phenolic anti oxidant in which the phenolic ring is substituted by at least one alkanoic alkyl ester group in which the alkanoic acid moiety has from about 2 to about 4 carbon atoms and the alkyl group has about 6 to about 16 carbon atoms. The proportions by weight of components (a) and (b) in the blend are in the range of about 30:70 to about 70:30 and the proportion by weight of component (c) to the sum of components (a) and (b) is in the range of about 0.1 : 100 to 1 : 100.

No. of Pages : 16 No. of Claims : 15

(12) PATENT APPLICATION PUBLICATION
(19) INDIA
(22) Date of filing of Application :07/10/2013
(21) Application No.8719/DELNP/2013 A
(43) Publication Date : 19/12/2014

(54) Title of the invention : METHOD FOR UPGRADING RFID READERS IN SITU

(51) International classification :H04Q5/22
(31) Priority Document No :61/453844
(32) Priority Date :17/03/2011
(33) Name of priority country :U.S.A.
(86) International Application No :PCT/US2012/029371
Filing Date :16/03/2012
(87) International Publication No :WO 2012/125897
(61) Patent of Addition to Application Number :NA
Filing Date :NA
(62) Divisional to Application Number :NA
Filing Date :NA

(71)**Name of Applicant :**
1)ASSA ABLOY AB
Address of Applicant :Klarabergsviadukten 90 SE 111 64 Stockholm Sweden
(72)**Name of Inventor :**
1)DAVIS Michael L.
2)HULUSI Tam
3)SPITLER Debra

(57) Abstract :
A reader enhancing device is proposed which enables an in situ upgrade of readers having limited processing capabilities. The reader enhancing device includes an emulation module that is capable of generating an output which emulates a first type of credential when the reader enhancing device receives an input that is not in a format used by the first type of credential. The output generated by the emulation module enables the reader to respond to the input even though the input is not in a format natively supported by the reader.

No. of Pages : 45 No. of Claims : 23

(12) PATENT APPLICATION PUBLICATION
(19) INDIA
(22) Date of filing of Application :08/10/2013

(21) Application No.8748/DELNP/2013 A
(43) Publication Date : 19/12/2014

(54) Title of the invention : VACCINE DELIVERY METHOD

(51) International classification :A61P33/12,A61K39/00,A61K9/00
(31) Priority Document No :61/476431
(32) Priority Date :18/04/2011
(33) Name of priority country :U.S.A.
(86) International Application No :PCT/US2012/034012
Filing Date :18/04/2012
(87) International Publication No :WO 2012/145355
(61) Patent of Addition to Application Number :NA
Filing Date :NA
(62) Divisional to Application Number :NA
Filing Date :NA

(71)**Name of Applicant :**
1)UNIVERSITY OF GEORGIA RESEARCH FOUNDATION INC.
Address of Applicant :Boyd Graduate Studies Research Center Athens Georgia 30602 U.S.A.
(72)**Name of Inventor :**
1)HARN Donald A.
2)QUEIROZ Rafaella
3)MCEWEN Lisa

(57) Abstract :
The present invention includes a composition including as one component a slurry matrix that is a liquid at room temperature and a gel at physiological salt concentrations and/or physiological temperatures and as a second component one or more antigens. Also include are methods of inducing an immune response in a subject and vaccinating a subject by administering such compositions.

No. of Pages : 69 No. of Claims : 38

(12) PATENT APPLICATION PUBLICATION
(19) INDIA
(22) Date of filing of Application :08/10/2013
(21) Application No.8749/DELNP/2013 A
(43) Publication Date : 19/12/2014

(54) Title of the invention : ENERGY RECOVERY FROM MOTHER LIQUID IN PARAXYLENE CRYSTALLIZATION PROCESS

(51) International classification :B01J8/00
(31) Priority Document No :61/454337
(32) Priority Date :18/03/2011
(33) Name of priority country :U.S.A.
(86) International Application No :PCT/US2012/029621
Filing Date :19/03/2012
(87) International Publication No :WO 2012/129155
(61) Patent of Addition to Application Number :NA
Filing Date :NA
(62) Divisional to Application Number :NA
Filing Date :NA

(71)**Name of Applicant :**
1)GTC TECHNOLOGY US LLC
Address of Applicant :1001 S. Dairy Ashford Suite 500 Houston TX 77077 U.S.A.
(72)**Name of Inventor :**
1)JIN Weihua
2)DING Zhongyi

(57) Abstract :
Methods for recovering energy from a mother liquor stream in paraxylene crystallization processes are disclosed herein. The low temperature energy from the mother liquor is optimally utilized to reduce the refrigeration burden on the crystallization process.

No. of Pages : 11 No. of Claims : 15

(12) PATENT APPLICATION PUBLICATION
(19) INDIA
(22) Date of filing of Application :08/10/2013
(21) Application No.8750/DELNP/2013 A
(43) Publication Date : 19/12/2014

(54) Title of the invention : RUBBING MACHINE AND ITS TOOL PAN

(51) International classification :B02C7/12
(31) Priority Document No :NA
(32) Priority Date :NA
(33) Name of priority country :NA
(86) International Application No :PCT/CN2011/000487
Filing Date :23/03/2011
(87) International Publication No :WO 2012/126142
(61) Patent of Addition to Application Number :NA
Filing Date :NA
(62) Divisional to Application Number :NA
Filing Date :NA

(71)**Name of Applicant :**
1)YFY BIOPULP TECHNOLOGY LIMITED
Address of Applicant :OMC Chambers Wickhams Cay 1 Road Town Tortola British Virgin Islands China
(72)**Name of Inventor :**
1)HUANG Rui Zhi
2)LIN Sheng Chien

(57) Abstract :
A rubbing machine and its tool pan are disclosed. The tool pan (122) comprises a number of homocentric annular structures (125) which have a lot of rubbing zones (121). Provided between the contiguous rubbing zones is at least a ramp (127) which is extending along the normal of the tool pan and the height of which is increased gradually towards the fringe of the tool pan. In the rubbing machine (100) the tool pan is used. The rubbing machine is applicable in paper making industry and can effectively separate and fibrillate the fiber of herbage by mechanical force between a pair of tool pans thereby needing not to use chemical medicine and according with the modern conception of environmental protection.

No. of Pages : 23 No. of Claims : 9

(12) PATENT APPLICATION PUBLICATION
(19) INDIA
(22) Date of filing of Application :09/10/2013
(21) Application No.8753/DELNP/2013 A
(43) Publication Date : 19/12/2014

(54) Title of the invention : EROSION RESISTANT CONDUCTIVE COMPOSITE MATERIAL COLLECTING ELECTRODE FOR WESP

(51) International classification :B03C3/45,A61L9/16,B01D49/00
(31) Priority Document No :61/468199
(32) Priority Date :28/03/2011
(33) Name of priority country :U.S.A.
(86) International Application No :PCT/CA2012/000277
Filing Date :28/03/2012
(87) International Publication No :WO 2012/129656
(61) Patent of Addition to Application Number :NA
Filing Date :NA
(62) Divisional to Application Number :NA
Filing Date :NA

(71)**Name of Applicant :**
1)TURBO-SONIC INC.
Address of Applicant :550 Parkside Drive Suite A 14 Waterloo Ontario N2L 5V4 Canada
(72)**Name of Inventor :**
1)MCGRATH Paul

(57) Abstract :
A collecting electrode for use in wet electrostatic precipitators the collecting electrode being fabricated from an electrically conductive corrosion resistant and temperature and spark resistant composite material comprising carbon fiber and thermosetting resin so as to pro\ the collecting electrode with an improved arc resistance as dictated by erosion density and direction by controlling the weave pattern and/or fabric thickness of the carbon fibers.

No. of Pages : 16 No. of Claims : 3

(12) PATENT APPLICATION PUBLICATION
(19) INDIA
(22) Date of filing of Application :09/10/2013
(21) Application No.8754/DELNP/2013 A
(43) Publication Date : 19/12/2014

(54) Title of the invention : USE OF METHYLHYDROXYETHYL CELLULOSE AS CEMENT ADDITIVE

(51) International classification :C04B24/38,C04B28/02,C09K8/493
(31) Priority Document No :13/090111
(32) Priority Date :19/04/2011
(33) Name of priority country :U.S.A.
(86) International Application No :PCT/US2012/032867
Filing Date :10/04/2012
(87) International Publication No :WO 2012/166245
(61) Patent of Addition to Application Number :NA
Filing Date :NA
(62) Divisional to Application Number :NA
Filing Date :NA

(71)**Name of Applicant :**
1)BAKER HUGHES INCORPORATED
Address of Applicant :2929 Allen Parkway Suite 2100 Houston Texas 77019 U.S.A.
(72)**Name of Inventor :**
1)BRAY Windal Scott
2)BRANDL Andreas

(57) Abstract :
Methylhydroxyethyl cellulose may be used as an additive in cement slurries in the treatment of wells to prevent or reduce the occurrence of gas channeling. In addition to acting as a gas control additive methylhydroxyethyl cellulose controls fluid loss minimizes free fluid and stabilizes foam during cementing of the well.

No. of Pages : 20 No. of Claims : 20

(12) PATENT APPLICATION PUBLICATION
(19) INDIA
(22) Date of filing of Application :07/10/2013
(21) Application No.8681/DELNP/2013 A
(43) Publication Date : 19/12/2014

(54) Title of the invention : LATERAL FLOW IMMUNOASSAY FOR DETECTING VITAMINS

(51) International classification :G01N33/92,G01N33/53
(31) Priority Document No :61/467668
(32) Priority Date :25/03/2011
(33) Name of priority country :U.S.A.
(86) International Application No :PCT/CA2012/000266
Filing Date :23/03/2012
(87) International Publication No :WO 2012/129650
(61) Patent of Addition to Application Number :NA
Filing Date :NA
(62) Divisional to Application Number :NA
Filing Date :NA

(71)**Name of Applicant :**
1)NANOSPEED DIAGNOSTICS INC.
Address of Applicant :c/o 9650 20 Avenue Suite #109 Edmonton Alberta T6N 1G1 Canada
(72)**Name of Inventor :**
1)GUPTA Rajan
2)GUPTA Seema

(57) Abstract :
The invention is directed to a method for detecting analytes, particularly vitamins, using a lateral flow immunoassay. The method may be used to detect vitamin D, particularly 25-hydroxy vitamin D3or 1,25-dihydroxy vitamin D . The method in volves obtaining a fluid sample from a sub ject; applying the sample to a lateral flow test strip comprising a conjugate pad cap able of releasing a labelled antibody against vitamin D, and a detection membrane com prising a first capture reagent specific to the antibody and immobilized on a test band; and detecting the presence or absence of vitamin D in the sample. The presence of a detectable signal in the test band is indicat ive of vitamin D deficiency.

No. of Pages : 27 No. of Claims : 19

(12) PATENT APPLICATION PUBLICATION
(19) INDIA
(22) Date of filing of Application :07/10/2013
(21) Application No.8682/DELNP/2013 A
(43) Publication Date : 19/12/2014

(54) Title of the invention : CALIBRATION METHOD FOR A DEVICE HAVING A SCAN FUNCTION

(51) International classification :G01S7/497,G01S17/42,G01C15/00
(31) Priority Document No :11165971.0
(32) Priority Date :13/05/2011
(33) Name of priority country :EPO
(86) International Application No :PCT/EP2012/058656
Filing Date :10/05/2012
(87) International Publication No :WO 2012/156277
(61) Patent of Addition to Application Number :NA
Filing Date :NA
(62) Divisional to Application Number :NA
Filing Date :NA

(71)**Name of Applicant :**
1)HEXAGON TECHNOLOGY CENTER GMBH
Address of Applicant :Heinrich Wild Strasse CH 9435 Heerbrugg Switzerland
(72)**Name of Inventor :**
1)HINDERLING J¼rg
2)GORDON Bianca
3)WALSER Bernd

(57) Abstract :
The invention relates to a calibration method for a device having a scan function (1) in particular a device measuring in polar coordinates comprising an electro optical distance measuring element (5) having a laser axis as the target axis (3) a motorized optical deflection unit (7) which deflects the target axis (3) by a deflection angle and an angle measuring element for determining at least one angular position of the deflection unit (7). To this end the following steps are carried out: first measurement of angle coordinates of a reticle in a first angular position of the deflection unit (7) as the first position and second measurement of angle coordinates of the reticle in a second angular position of the deflection unit (7) as the second position wherein the first position and second position are different from each other in particular wherein the first position is rotated relative to the second position in two axes such that the reticle in both positions points at least approximately in the same spatial direction. The first and second measurements of the reticle are carried out on the basis of images taken with a camera (4) the optical axis of which is deflected by the deflection unit and calibration parameters are determined on the basis of the angular positions and the angular coordinates in the first and second positions.

No. of Pages : 76 No. of Claims : 15

(12) PATENT APPLICATION PUBLICATION
(19) INDIA
(22) Date of filing of Application :07/10/2013
(21) Application No.8683/DELNP/2013 A
(43) Publication Date : 19/12/2014

(54) Title of the invention : SYSTEM AND METHOD FOR SECURELY BINDING AND NODE LOCKING PROGRAM EXECUTION TO A TRUSTED SIGNATURE AUTHORITY

(51) International classification :G06F21/22
(31) Priority Document No :NA
(32) Priority Date :NA
(33) Name of priority country :NA
(86) International Application No :PCT/CA2011/050150
Filing Date :21/03/2011
(87) International Publication No :WO 2012/126077
(61) Patent of Addition to Application Number :NA
Filing Date :NA
(62) Divisional to Application Number :NA
Filing Date :NA

(71)**Name of Applicant :**
1)IRDETO B.V.
Address of Applicant :Taurus Avenue 105 NL 2132 LS Hoofddorp Netherlands
(72)**Name of Inventor :**
1)BODIS Michael Louis John
2)SUI Jiayuan
3)GOODES Grant Stewart
4)LIEM Clifford

(57) Abstract :
A system and method is disclosed for securely binding an arbitrary program to an authorized instance of a generic execution platform. Once the binding process occurs the protected software application will not exhibit correct behavior unless run on the execution platform to which it is bound. The system and method withstands repeated attacks which tamper with the software application and the execution platform. The system and method present a mechanism to bind a program P to any un trusted execution platform E which contains a Trusted Signing Authority (TSA). The TSA may take many alternate forms including a trusted platform module secure processor kernel driver and hardened software agents.

No. of Pages : 25 No. of Claims : 28

(12) PATENT APPLICATION PUBLICATION
(19) INDIA
(22) Date of filing of Application :07/10/2013
(21) Application No.8684/DELNP/2013 A
(43) Publication Date : 19/12/2014

(54) Title of the invention : HUMAN ANTIBODIES AND PROTEINS

(51) International classification :C07K 16/00
(31) Priority Document No :0502201.7
(32) Priority Date :03/02/2005
(33) Name of priority country :U.K.
(86) International Application No :PCT/GB2006/000355
Filing Date :03/02/2006
(87) International Publication No : NA
(61) Patent of Addition to Application Number :NA
Filing Date :NA
(62) Divisional to Application Number :5647/DELNP/2007
Filed on :20/07/2007

(71)**Name of Applicant :**
1)ANTITOPE LIMITED
Address of Applicant :Babraham Institute, Babraham, Cambridge, Great Britain U.K.
(72)**Name of Inventor :**
1)JONES Timothy David
2)BAKER Matthew Paul

(57) Abstract :
The present invention provides composite proteins, including antibodies, which show reduced immunogenicity. In particular, composite antibodies for use in humans are provided, in particular antibodies which have been modified to remove one or more T-cell epitopes. Methods for generating such proteins are also provided.

No. of Pages : 93 No. of Claims : 19

(12) PATENT APPLICATION PUBLICATION
(19) INDIA
(22) Date of filing of Application :08/10/2013
(21) Application No.8731/DELNP/2013 A
(43) Publication Date : 19/12/2014

(54) Title of the invention : YEAST CELL CAPABLE OF CONVERTING SUGARS INCLUDING ARABINOSE AND XYLOSE

(51) International classification :C07K14/395,C12N1/36,C12R1/865
(31) Priority Document No :61/478142
(32) Priority Date :22/04/2011
(33) Name of priority country :U.S.A.
(86) International Application No :PCT/EP2012/057273
Filing Date :20/04/2012
(87) International Publication No :WO 2012/143513
(61) Patent of Addition to Application Number :NA
Filing Date :NA
(62) Divisional to Application Number :NA
Filing Date :NA

(71)**Name of Applicant :**
1)DSM IP ASSETS B.V.
Address of Applicant :Het Overloon 1 NL 6411 TE Heerlen Netherlands
(72)**Name of Inventor :**
1)KLAASSEN Paul
2)GIELESEN Bianca Elisabeth Maria
3)VAN SUYLEKOM Gijsberdina Pieternella
4)SARANTINOPOULOS Panagiotis
5)HEIJNE Wilbert Herman Marie
6)GREEVE Aldo

(57) Abstract :
Yeast cell belonging to the genus having introduced into its genome at least one xylA gene and at least one of each of araA araB and araD genes and that is capable of consuming a mixed sugar mixture comprising glucose xylose and arabinose wherein the cell co consumes glucose and arabinose has genetic variations obtained during adaptive evolution and has a specific xylose consumption rate in the presence of glucose that is 0.25 g xylose/h g DM or more.

No. of Pages : 99 No. of Claims : 17

(12) PATENT APPLICATION PUBLICATION
(19) INDIA
(22) Date of filing of Application :08/10/2013
(21) Application No.8732/DELNP/2013 A
(43) Publication Date : 19/12/2014

(54) Title of the invention : NEW COMPOSITION

(51) International classification :A61K33/42,A61P31/04
(31) Priority Document No :61/452692
(32) Priority Date :15/03/2011
(33) Name of priority country :U.S.A.
(86) International Application No :PCT/AU2012/000220
Filing Date :02/03/2012
(87) International Publication No :WO 2012/122586
(61) Patent of Addition to Application Number :NA
Filing Date :NA
(62) Divisional to Application Number :NA
Filing Date :NA

(71)**Name of Applicant :**
1)PHOSPHAGENICS LIMITED
Address of Applicant :11 Duerdin Street Clayton Victoria 3168 Australia
2)MASTITIS MANAGEMENT AUSTRALIA PTY LTD
(72)**Name of Inventor :**
1)LIBINAKI Roksan
2)NEELY Robert Lee

(57) Abstract :
Compositions and formulations comprising a non neutralised tocol phosphate and a vitamin A compound which are suitable for the treatment of inflammation and/or infection in breast or udder tissue more particularly in a mammary gland reducing the somatic cell count in a lactating subject and supplementing vitamin E levels in a subject.

No. of Pages : 32 No. of Claims : 31

(12) PATENT APPLICATION PUBLICATION
(19) INDIA
(22) Date of filing of Application :08/10/2013
(21) Application No.8733/DELNP/2013 A
(43) Publication Date : 19/12/2014

(54) Title of the invention : MEASURING SYSTEM FOR DETERMINING 3D COORDINATES OF AN OBJECT SURFACE

(51) International classification :G01B21/04,B64C39/02
(31) Priority Document No :11162508.3
(32) Priority Date :14/04/2011
(33) Name of priority country :EPO
(86) International Application No :PCT/EP2012/056759
Filing Date :13/04/2012
(87) International Publication No :WO 2012/140190
(61) Patent of Addition to Application Number :NA
Filing Date :NA
(62) Divisional to Application Number :NA
Filing Date :NA

(71)**Name of Applicant :**
1)HEXAGON TECHNOLOGY CENTER GMBH
Address of Applicant :Heinrich Wild Strasse CH 9435 Heerbrugg Switzerland
(72)**Name of Inventor :**
1)METZLER Bernhard
2)SIERCKS Knut

(57) Abstract :
A measuring system (10) according to the invention for determining 3D coordinates in particular a multiplicity of 3D coordinates of measurement points on an object surface in particular on an industrial product in an outer object coordinate system has a scanning apparatus (21) for measuring in particular on a point by point basis the measurement points on the object surface and for determining inner measurement point coordinates in an inner scanning coordinate system. Furthermore a referencing arrangement (30) for producing referencing information in particular an outer measurement position and measurement orientation of the scanning apparatus (21) for referencing the inner measurement point coordinates in the outer object coordinate system and an evaluation unit (34) for determining the 3D coordinates of the measurement points in the outer object coordinate system on the basis of the inner measurement point coordinates and the referencing information are provided such that the inner measurement point coordinates are in the form of 3D coordinates in the outer object coordinate system in particular in the form of a point cloud. The scanning apparatus (21) is in this case carried in an unmanned controllable automotive air vehicle (20) in particular wherein the air vehicle (20) is designed such that the air vehicle (20) can be oriented and moved in a hovering manner.

No. of Pages : 72 No. of Claims : 15

(12) PATENT APPLICATION PUBLICATION
(19) INDIA
(22) Date of filing of Application :08/10/2013
(21) Application No.8734/DELNP/2013 A
(43) Publication Date : 19/12/2014

(54) Title of the invention : SYSTEM AND METHOD FOR DETECTING AND REPAIRING DEFECTS IN AN ELECTROCHROMIC DEVICE USING THERMAL IMAGING

(51) International classification	:G06T7/00,G01N25/72,H01L31/20
(31) Priority Document No	:61/470083
(32) Priority Date	:31/03/2011
(33) Name of priority country	:U.S.A.
(86) International Application No	:PCT/US2012/031182
Filing Date	:29/03/2012
(87) International Publication No	:WO 2012/154320
(61) Patent of Addition to Application Number	:NA
Filing Date	:NA
(62) Divisional to Application Number	:NA
Filing Date	:NA

(71)**Name of Applicant :**
1)SAGE ELECTROCHROMICS INC
Address of Applicant :One Sage Way Faribault MN 55021 U.S.A.
(72)**Name of Inventor :**
1)PALM Steve
2)GIRON Jean Christophe
3)LETOCART Philippe
4)ROUSSELET Jerome
5)SELLES Olivier
6)WERNER Katja

(57) Abstract :
System (1) and method (100) for detecting and repairing a defect in an electrochromic device (30) may include acquiring a thermal image of the electrochromic device (30) when the device is in an operating state. In addition the system and method may include processing thermal imaging data representative of the thermal image to detect a defect in the electrochromic device by comparing a thermal amplitude detected at one or more pixels of the thermal image with a predetermined value and to determine a location of the electrochromic device corresponding to the detected defect.

No. of Pages : 43 No. of Claims : 18

(12) PATENT APPLICATION PUBLICATION
(19) INDIA
(22) Date of filing of Application :09/10/2013
(21) Application No.8767/DELNP/2013 A
(43) Publication Date : 19/12/2014

(54) Title of the invention : NUTRITIONAL COMPOSITIONS INCLUDING BRANCHED CHAIN FATTY ACIDS FOR IMPROVING GUT BARRIER FUNCTION

(51) International classification	:A61K31/20,A61K31/201,A61K31/202
(31) Priority Document No	:61/474452
(32) Priority Date	:12/04/2011
(33) Name of priority country	:U.S.A.
(86) International Application No Filing Date	:PCT/EP2012/056663 :12/04/2012
(87) International Publication No	:WO 2012/140132
(61) Patent of Addition to Application Number Filing Date	:NA :NA
(62) Divisional to Application Number Filing Date	:NA :NA

(71)**Name of Applicant :**
1)NESTEC S.A.
Address of Applicant :Av. Nestl 55 CH 1800 Vevey Switzerland
(72)**Name of Inventor :**
1)BOLSTER Doug
2)ROUGHEAD Zamzam Kabiry (Fariba)
3)MAGER Jennifer

(57) Abstract :
Nutritional compositions for improving treating and/or preventing various medical conditions and methods of using same are provided. Such medical conditions include infection sepsis malabsorption allergy inflammatory bowel disease and diarrhea among others. The nutritional compositions include branched chain fatty acids and may include other functional ingredients such as but not limited to probiotics nucleotides and amino acids. Methods of administering such nutritional products to individuals in need of same are also provided.

No. of Pages : 33 No. of Claims : 32

(12) PATENT APPLICATION PUBLICATION
(19) INDIA
(22) Date of filing of Application :07/10/2013
(21) Application No.8689/DELNP/2013 A
(43) Publication Date : 19/12/2014

(54) Title of the invention : ABSORBENT ARTICLE WITH NARROW POLYMERIC FILM AND OPACITY STRENGTHENING PATCH

(51) International classification :A61F13/514
(31) Priority Document No :61/480670
(32) Priority Date :29/04/2011
(33) Name of priority country :U.S.A.
(86) International Application No :PCT/US2012/035316
Filing Date :27/04/2012
(87) International Publication No :WO 2012/149231
(61) Patent of Addition to Application Number :NA
Filing Date :NA
(62) Divisional to Application Number :NA
Filing Date :NA

(71)**Name of Applicant :**
1)THE PROCTER & GAMBLE COMPANY
Address of Applicant :One Procter & Gamble Plaza Cincinnati Ohio 45202 U.S.A.
(72)**Name of Inventor :**
1)RAYCHECK Jeromy Thomas
2)GOODLANDER Lisa Jane
3)GRINKEMEYER Lisa Marie
4)MOSMAN Jessica Lee
5)NAYLOR Jason Edward

(57) Abstract :
A disposable absorbent article for wearing about the lower torso of a wearer the disposable absorbent article may include a first waist region a second waist region a crotch region disposed between the first and second waist regions; a first waist edge and a second waist edge; and a first longitudinal edge and a second longitudinal edge. The disposable absorbent article may include a chassis comprising a topsheet a backsheet comprising a polymeric film an absorbent core disposed between the topsheet and the backsheet. The polymeric film may be at least 20mm more narrow than the chassis. An opacity strengthening patch may be disposed on the backsheet.

No. of Pages : 45 No. of Claims : 15

(12) PATENT APPLICATION PUBLICATION
(19) INDIA
(22) Date of filing of Application :07/10/2013

(21) Application No.8690/DELNP/2013 A
(43) Publication Date : 19/12/2014

(54) Title of the invention : ORGANOGOLD COMPLEXES AND METHODS FOR MAKING THE SAME

(51) International classification :C07F1/12
(31) Priority Document No :1105531.6
(32) Priority Date :31/03/2011
(33) Name of priority country :U.K.
(86) International Application No :PCT/GB2012/000301
Filing Date :30/03/2012
(87) International Publication No :WO 2012/131313
(61) Patent of Addition to Application Number :NA
Filing Date :NA
(62) Divisional to Application Number :NA
Filing Date :NA

(71)**Name of Applicant :**
1)THE UNIVERSITY OF SUSSEX
Address of Applicant :Sussex House Falmer Brighton Sussex BN1 9RH U.K.
(72)**Name of Inventor :**
1)VISEUX Eddy Michel Elie
2)GALLOP Christopher
3)BOBIN Mariusz

(57) Abstract :
The present invention relates to chiral ligands deriving from a and amino acids and from metal complexes formed from the same. The ligands are useful with catalytic gold complexes particularly Au(l) complexes.

No. of Pages : 101 No. of Claims : 70

(12) PATENT APPLICATION PUBLICATION
(19) INDIA
(22) Date of filing of Application :07/10/2013
(21) Application No.8691/DELNP/2013 A
(43) Publication Date : 19/12/2014

(54) Title of the invention : TIRE

(51) International classification :B60C11/11,B60C11/04
(31) Priority Document No :2011086822
(32) Priority Date :08/04/2011
(33) Name of priority country :Japan
(86) International Application No :PCT/JP2012/059197
Filing Date :04/04/2012
(87) International Publication No :WO 2012/137818
(61) Patent of Addition to Application Number :NA
Filing Date :NA
(62) Divisional to Application Number :NA
Filing Date :NA

(71)**Name of Applicant :**
1)BRIDGESTONE CORPORATION
Address of Applicant :10 1 Kyobashi 1 chome Chuo ku Tokyo 1048340 Japan
(72)**Name of Inventor :**
1)OKADA Junichi

(57) Abstract :
A block (100) includes: a pair of extended parts (40) extending in the circumferential direction of a tire from respective side surfaces (25A 25B); and a pair of projecting parts (60) projecting in the circumferential direction of the tire from the respective extended parts (40). Each extended part (40) has an acute corner (45) formed by the intersection of an oblique groove and a circumferential direction groove (150). The extended part (40A) is located on the side of one end in the tread width direction and the extended part (40B) is located on the side of the other end in the tread width direction. The outer surface of each projecting part (60) in the radial direction of the tire is oblique with respect to the radial direction of the tire.

No. of Pages : 30 No. of Claims : 4

(12) PATENT APPLICATION PUBLICATION
(19) INDIA
(22) Date of filing of Application :09/10/2013
(21) Application No.8772/DELNP/2013 A
(43) Publication Date : 19/12/2014

(54) Title of the invention : 30 MINUTE RESIDENTIAL FIRE PROTECTION OF FLOORS

(51) International classification :E04B5/12,E04B9/00,E04B9/24
(31) Priority Document No :13/069445
(32) Priority Date :23/03/2011
(33) Name of priority country :U.S.A.
(86) International Application No :PCT/US2012/028725
Filing Date :12/03/2012
(87) International Publication No :WO 2012/128983
(61) Patent of Addition to Application Number :NA
Filing Date :NA
(62) Divisional to Application Number :NA
Filing Date :NA

(71)**Name of Applicant :**
1)UNITED STATES GYPSUM COMPANY
Address of Applicant :550 West Adams Street Chicago Illinois 60661 3676 U.S.A.
(72)**Name of Inventor :**
1)MILLER Gary F.

(57) Abstract :
A fire protective barrier for a residential floor (10) and a method of its construction the construction involving a floor (10) supported on lightweight joists (11) of a type susceptible to early failure once exposed to a fire existing in the space below the floor an array of elongated steel main tees (21) suspended below the joists the tees being parallel and spaced apart by a nominal distance of 21 the tees having an upper hollow reinforcing bulb a central vertical web extending downwardly from the bulb and a horizontal flange extending laterally from both sides of the web drywall panels (22) carried on upper faces of the flanges of adjacent pairs of tees the drywall panels having a width of slightly less than the center to center distance of the tees a majority of the panels having lengths of 8 or more.

No. of Pages : 13 No. of Claims : 7

(12) PATENT APPLICATION PUBLICATION
(19) INDIA
(22) Date of filing of Application :09/10/2013
(21) Application No.8773/DELNP/2013 A
(43) Publication Date : 19/12/2014

(54) Title of the invention : SMS MESSAGING SYSTEM ACCOMMODATION VARIABLE ENTRIES FOR LOTTERIES

(51) International classification	:H04M3/38,H04M3/42,G06Q50/34
(31) Priority Document No	:13/045475
(32) Priority Date	:10/03/2011
(33) Name of priority country	:U.S.A.
(86) International Application No	:PCT/IB2012/000533
Filing Date	:10/03/2012
(87) International Publication No	:WO 2012/120376
(61) Patent of Addition to Application Number	:NA
Filing Date	:NA
(62) Divisional to Application Number	:NA
Filing Date	:NA

(71)**Name of Applicant :**
1)DE CUBA Riangelo Javier
Address of Applicant :10 Scopetstraat Oranjestad ARUBA
(72)**Name of Inventor :**
1)DE CUBA Riangelo Javier

(57) Abstract :
A SMS lottery gateway server obtains one SMS message from a mobile phone via a base station over a wide area network and parses the one SMS message to identify a plurality of game entries including one or more associated picks. A lottery server receives the game entries and associated picks from the SMS lottery gateway server and plays lottery games based thereon. An SMS lottery gateway server can parse the SMS message in various ways such as looking for a number and an associated pick the number indicating a quantity of the plurality of entries. An SMS transaction gateway server sends a request indicative of the game entries over a wide area network to a billing platform server receives a confirmation or denial over a wide area network from the billing platform server and commences fulfillment of the game entries when a confirmation is received. Lottery winnings can be credited to a prepaid or postpaid account.

No. of Pages : 42 No. of Claims : 24

(12) PATENT APPLICATION PUBLICATION
(19) INDIA
(22) Date of filing of Application :09/10/2013
(21) Application No.8768/DELNP/2013 A
(43) Publication Date : 19/12/2014

(54) Title of the invention : NUTRITIONAL COMPOSITIONS COMPRISING ALPHA HYDROXYISOCAPROIC ACID

(51) International classification :A23L1/30,A61K31/19
(31) Priority Document No :61/476345
(32) Priority Date :18/04/2011
(33) Name of priority country :U.S.A.
(86) International Application No :PCT/EP2012/057092
Filing Date :18/04/2012
(87) International Publication No :WO 2012/143402
(61) Patent of Addition to Application Number :NA
Filing Date :NA
(62) Divisional to Application Number :NA
Filing Date :NA

(71)**Name of Applicant :**
1)NESTEC S.A.
Address of Applicant :Av. Nestl 55 CH 1800 Vevey Switzerland
(72)**Name of Inventor :**
1)GREENBERG Norman Alan
2)BREUILLE Denis
3)ROUGHEAD Zamzam Kabiry (Fariba)
4)BOLSTER Doug
5)MAGER Jennifer

(57) Abstract :
Nutritional compositions for maximizing muscle protein synthesis while minimizing the catabolism of muscle proteins and methods of using same are provided. In this manner the nutritional compositions may provide for retention of lean body mass which helps to avoid loss of independence and functionality as well as to improve quality of life especially in the elderly at risk of sarcopenia and frailty. The nutritional compositions include a hydroxyisocaproic acid and may include other functional ingredients such as but not limited to whey protein incuding whey protein micelles prebiotic fibers L carnitine nucleotides and amino acids. Methods of administering such nutritional products to individuals in need of same are also provided.

No. of Pages : 56 No. of Claims : 39

(12) PATENT APPLICATION PUBLICATION
(19) INDIA
(22) Date of filing of Application :09/10/2013
(21) Application No.8769/DELNP/2013 A
(43) Publication Date : 19/12/2014

(54) Title of the invention : GAS PRESSURE BIASED SEALING METHOD FOR AN ACTUATING SHAFT

(51) International classification :F02B39/00,F01D11/00,F01D25/00
(31) Priority Document No :61/453637
(32) Priority Date :17/03/2011
(33) Name of priority country :U.S.A.
(86) International Application No :PCT/US2012/028170
Filing Date :08/03/2012
(87) International Publication No :WO 2012/125387
(61) Patent of Addition to Application Number :NA
Filing Date :NA
(62) Divisional to Application Number :NA
Filing Date :NA

(71)**Name of Applicant :**
1)BORGWARNER INC.
Address of Applicant :Patent Department 3850 Hamlin Road Auburn Hills Michigan 48326 U.S.A.
(72)**Name of Inventor :**
1)HOUSE Timothy

(57) Abstract :
The propensity for gas leakage around a shaft which extends through a bore which connects volumes of differing pressures e.g. a turbocharger turbine housing and the ambient air is minimized with the addition of a pair of seal rings biased by a gas pressure to provide a continuous gas and soot seal.

No. of Pages : 16 No. of Claims : 9

(12) PATENT APPLICATION PUBLICATION
(19) INDIA
(22) Date of filing of Application :09/10/2013
(21) Application No.8770/DELNP/2013 A
(43) Publication Date : 19/12/2014

(54) Title of the invention : ACTUATOR SHAFT BOOT

(51) International classification :F02B39/00,F02B37/18,F16J15/52
(31) Priority Document No :61/454627
(32) Priority Date :21/03/2011
(33) Name of priority country :U.S.A.
(86) International Application No :PCT/US2012/028177
Filing Date :08/03/2012
(87) International Publication No :WO 2012/128957
(61) Patent of Addition to Application Number :NA
Filing Date :NA
(62) Divisional to Application Number :NA
Filing Date :NA

(71)**Name of Applicant :**
1)BORGWARNER INC.
Address of Applicant :Patent Department 3850 Hamlin Road Auburn Hills Michigan 48326 U.S.A.
(72)**Name of Inventor :**
1)GARCIA ALCARAZ Alexandre

(57) Abstract :
Wastegated turbochargers all use actuators to manipulate the wastegate valve which controls turbine wheel bypass of exhaust gas energy. The diaphragms in these actuators are susceptible to foreign material damage. This damage is minimized by the addition of a boot around the actuator shaft preventing ingress of foreign materials and fluids which could be detrimental to actuator life.

No. of Pages : 22 No. of Claims : 15

(12) PATENT APPLICATION PUBLICATION
(19) INDIA
(22) Date of filing of Application :09/10/2013
(21) Application No.8781/DELNP/2013 A
(43) Publication Date : 19/12/2014

(54) Title of the invention : METHOD FOR VOLUMETRIC REDUCTION OF ORGANIC LIQUIDS

(51) International classification :B01D61/00
(31) Priority Document No :61/480852
(32) Priority Date :29/04/2011
(33) Name of priority country :U.S.A.
(86) International Application No :PCT/US2012/035248
Filing Date :26/04/2012
(87) International Publication No :WO 2012/149183
(61) Patent of Addition to Application Number :NA
Filing Date :NA
(62) Divisional to Application Number :NA
Filing Date :NA

(71)**Name of Applicant :**
1)GEOSYNTEC CONSULTANTS INC.
Address of Applicant :5901 Broken Sound Parkway NW Suite 300 Boca Raton FL 33487 U.S.A.
(72)**Name of Inventor :**
1)GRANT Gavin
2)MAJOR David
3)GERHARD Jason
4)TORERO Jose
5)SCHOLES Grant
6)PIRONI Paolo
7)SWITZER Christine

(57) Abstract :
Methods are provided for the volumetric reduction of organic liquids. The methods comprise admixing a porous matrix material with an organic liquid to produce a mixture forcing oxidant through the mixture and initiating a self sustaining smoldering combustion of the mixture. Additional embodiments aggregate the organic liquid or porous matrix material or mixture thereof in an impoundment such as a reaction vessel lagoon or matrix pile. Further embodiments utilize at least one heater to initiate combustion and at least one air supply port to supply oxidant to initiate and maintain combustion. Yet further embodiments comprise the batch addition of a fuel additive to the aggregate prior to smoldering to ensure that the ensuing smoldering combustion is self sustaining or of the required temperature to reduce or remove other contaminants in the matrix or organic liquid such as heavy metals or asbestos.

No. of Pages : 47 No. of Claims : 43

(12) PATENT APPLICATION PUBLICATION
(19) INDIA
(22) Date of filing of Application :09/10/2013
(21) Application No.8783/DELNP/2013 A
(43) Publication Date : 19/12/2014

(54) Title of the invention : ORAL CARE KIT FOR DISPLAYING A PORTION OF A TOOTHBRUSH

(51) International classification :A61J1/03,B65D75/32
(31) Priority Document No :NA
(32) Priority Date :NA
(33) Name of priority country :NA
(86) International Application No :PCT/US2011/038297
Filing Date :27/05/2011
(87) International Publication No :WO 2012/166085
(61) Patent of Addition to Application Number :NA
Filing Date :NA
(62) Divisional to Application Number :NA
Filing Date :NA

(71)**Name of Applicant :**
1)COLGATE PALMOLIVE COMPANY
Address of Applicant :300 Park Avenue New York New York 10022 U.S.A.
(72)**Name of Inventor :**
1)LEE David K.
2)NGUYEN Quang

(57) Abstract :
An oral care kit (1000) including a package (100) a toothbrush (200) positioned within the package and a backer card (300) comprising a window aperture (30). The oral care kit provides the user with the ability to view a portion of the toothbrush such as the head (210) from both the front and rear of the package while maintaining the package in an enclosed state. In one embodiment of the invention the package comprises a front cover (101) comprising a substantially transparent window portion (130) and a rear cover (102) comprising a substantially transparent window portion (120) the rear cover coupled to the front cover to form a receiving cavity (115). The backer card is positioned within the receiving cavity between the toothbrush and the rear cover so that the window portion of the rear cover the window aperture (301) of the backer card a portion of the toothbrush and the window portion of the front cover are transversely aligned.

No. of Pages : 27 No. of Claims : 49

(12) PATENT APPLICATION PUBLICATION
(19) INDIA
(22) Date of filing of Application :19/09/2013
(21) Application No.8203/DELNP/2013 A
(43) Publication Date : 19/12/2014

(54) Title of the invention : CARTRIDGE MEDICAL APPARATUS AND METHOD

(51) International classification :A61N5/06
(31) Priority Document No :1104369.2
(32) Priority Date :15/03/2011
(33) Name of priority country :U.K.
(86) International Application No :PCT/GB2012/050397
Filing Date :22/02/2012
(87) International Publication No :WO 2012/123709
(61) Patent of Addition to Application Number :NA
Filing Date :NA
(62) Divisional to Application Number :NA
Filing Date :NA

(71)**Name of Applicant :**
1)POLYPHOTONIX LIMITED
Address of Applicant :National Centre for Printable Electronics Netpark Sedgefield Co Durham TS21 3FG U.K.
(72)**Name of Inventor :**
1)ENGLISH Stuart
2)KIRK Richard Anthony
3)HOLLAND Martin Neil

(57) Abstract :
A cartridge medical apparatus and method are disclosed. The cartridge and a holding element are for operable connection with each other to form a phototherapy apparatus. The cartridge includes a radiation source for emitting radiation towards an area to be treated of a user; a mount element for positioning the radiation source in a predetermined position relative to the area to be treated; wherein the mount element comprises a locating portion configured for locating the cartridge at a predetermined position with respect to a body portion of the user.

No. of Pages : 24 No. of Claims : 19

(12) PATENT APPLICATION PUBLICATION
(19) INDIA
(22) Date of filing of Application :19/09/2013
(21) Application No.8204/DELNP/2013 A
(43) Publication Date : 19/12/2014

(54) Title of the invention : AN APPARATUS FOR EXTRACORPOREAL BLOOD TREATMENT

(51) International classification :A61M1/16
(31) Priority Document No :MI2011A000441
(32) Priority Date :21/03/2011
(33) Name of priority country :Italy
(86) International Application No :PCT/IB2012/000534
Filing Date :20/03/2012
(87) International Publication No :WO 2012/172398
(61) Patent of Addition to Application Number :NA
Filing Date :NA
(62) Divisional to Application Number :NA
Filing Date :NA

(71)**Name of Applicant :**
1)GAMBRO LUNDIA AB
Address of Applicant :P.O. Box 101 01 220 10 Lund Sweden
(72)**Name of Inventor :**
1)FONTANAZZI Francesco
2)SURACE Alessandro
3)PAOLINI Francesco

(57) Abstract :
An apparatus (1) for extracorporeal blood treatment is described comprising a treatment unit (2) an extracorporeal blood circuit (8) an infusion line (9 9a 9b) of a replacement fluid a dialysis line connected in inlet to the second chamber (4) and a fluid evacuation line (10). The apparatus further comprises sensors for determining a first parameter relating to a patient s blood volume (BV%) a second parameter relating to an ultrafiltration flow rate (UFR) or to a patient s weight loss rate (WLR) a third parameter (Cd Na) relating to a conductivity or concentration of a liquid crossing the dialysis line and/or the infusion line and a fourth parameter relating to an infusion flow rate (Q). Lastly the apparatus comprises a control unit for performing a control procedure comprising receiving from the sensors the measured values of the above cited parameters and calculating on the basis of the measured values and the prescription values of the variation in blood volume (BV%) the weight loss (WL)> the plasma conductivity or sodium concentration(C Na the infusion volume (V) control values to be imposed during a time interval following the control instant.

No. of Pages : 65 No. of Claims : 15

(12) PATENT APPLICATION PUBLICATION
(19) INDIA
(22) Date of filing of Application :19/09/2013
(21) Application No.8205/DELNP/2013 A
(43) Publication Date : 19/12/2014

(54) Title of the invention : AN APPARATUS FOR EXTRACORPOREAL BLOOD TREATMENT

(51) International classification :A61M1/16
(31) Priority Document No :MI2011A000442
(32) Priority Date :21/03/2011
(33) Name of priority country :Italy
(86) International Application No :PCT/IB2012/000537
Filing Date :20/03/2012
(87) International Publication No :WO 2012/127298
(61) Patent of Addition to Application Number :NA
Filing Date :NA
(62) Divisional to Application Number :NA
Filing Date :NA

(71)**Name of Applicant :**
1)GAMBRO LUNDIA AB
Address of Applicant :P.O. Box 101 01 SE 220 10 Lund Sweden
(72)**Name of Inventor :**
1)FONTANAZZI Francesco
2)SURACE Alessandro
3)PAOLINI Francesco

(57) Abstract :
An apparatus (1) for extracorporeal blood treatment is described comprising a treatment unit (2) an extracorporeal blood circuit (8) an infusion line (9 9a 9b) of a replacement fluid a dialysis line connected in inlet to the second chamber (4) and a fluid evacuation line (10). The apparatus further comprises sensors for determining a first parameter relating to a patient s blood volume (BV%) a second parameter relating to an ultrafiltration flow rate (UFR) or to a patient s weight loss rate (WLR) a third parameter (Cd Na) relating to a conductivity or concentration of a liquid crossing the dialysis line and/or the infusion line and a fourth parameter relating to an infusion flow rate (Q) Lastly the apparatus comprises a control unit for performing a control procedure (50) for regulating a variation in blood volume (BV%) and a setting sequence (200) for imposing a transmembrane pressure (TMP) to values which enable maximising the convective exchanges.

No. of Pages : 67 No. of Claims : 21

(12) PATENT APPLICATION PUBLICATION
(19) INDIA
(22) Date of filing of Application :19/09/2013
(21) Application No.8207/DELNP/2013 A
(43) Publication Date : 19/12/2014

(54) Title of the invention : SUNLIGHT SHIELDING DEVICE

(51) International classification :E06B9/38,E06B9/262
(31) Priority Document No :2011086398
(32) Priority Date :08/04/2011
(33) Name of priority country :Japan
(86) International Application No :PCT/JP2012/058931
Filing Date :02/04/2012
(87) International Publication No :WO 2012/137731
(61) Patent of Addition to Application Number :NA
Filing Date :NA
(62) Divisional to Application Number :NA
Filing Date :NA

(71)**Name of Applicant :**
1)TOSO COMPANY LIMITED
Address of Applicant :4 9 Shinkawa 1 chome Chuo ku Tokyo 1040033 Japan
(72)**Name of Inventor :**
1)MUTO Tomonori

(57) Abstract :
A sunlight shielding device in which two pieces of shielding material suspended from a head box can be switched using a single loop shaped raising/lowering operation cord wherein a clutch unit is implemented with a short overall length a compact size a simple configuration and a small number of components. When rotation from an input disc (81) causes an input plate (83) to rotate in a predetermined direction an engaging section of a frame plate (84) projects out from the frame plate along a guide groove engages a latching protrusion of an output drum (87) and transmits the rotation from the input disc (81) to the output drum (87).

No. of Pages : 33 No. of Claims : 6

(12) PATENT APPLICATION PUBLICATION
(19) INDIA
(22) Date of filing of Application :08/10/2013
(21) Application No.8741/DELNP/2013 A
(43) Publication Date : 19/12/2014

(54) Title of the invention : NITROGEN FIXATION GENE ISLAND SUITABLE FOR EXPRESSING IN PROKARYOTIC AND EUKARYOTIC SYSTEMS

(51) International classification :C12N15/79,C12N15/63,C12N15/31
(31) Priority Document No :201110070755.5
(32) Priority Date :23/03/2011
(33) Name of priority country :China
(86) International Application No :PCT/CN2012/072709
Filing Date :21/03/2012
(87) International Publication No :WO 2012/126367
(61) Patent of Addition to Application Number :NA
Filing Date :NA
(62) Divisional to Application Number :NA
Filing Date :NA

(71)**Name of Applicant :**
1)PEKING UNIVERSITY
Address of Applicant :No. 5 Yiheyuan Road Haidian District Beijing 100871 China
(72)**Name of Inventor :**
1)WANG Xia
2)YANG Jianguo
3)CHEN Li
4)YANG Yun
5)WANG Yiping

(57) Abstract :
Provided is a nitrogen fixation gene island suitable for expressing in prokaryotic and eukaryotic systems wherein the prokaryotic nitrogen fixation gene is modified using a T7 promoter to make it suitable for eukaryotic expression.

No. of Pages : 31 No. of Claims : 10

(12) PATENT APPLICATION PUBLICATION
(19) INDIA
(22) Date of filing of Application :08/10/2013
(21) Application No.8745/DELNP/2013 A
(43) Publication Date : 19/12/2014

(54) Title of the invention : APPARATUS AND METHOD FOR DATA COMMUNICATION IN AN ENERGY DISTRIBUTION NETWORK

(51) International classification :H04L12/24,G05B19/418
(31) Priority Document No :13/070351
(32) Priority Date :23/03/2011
(33) Name of priority country :U.S.A.
(86) International Application No :PCT/US2011/063574
Filing Date :06/12/2011
(87) International Publication No :WO 2012/128803
(61) Patent of Addition to Application Number :NA
Filing Date :NA
(62) Divisional to Application Number :NA
Filing Date :NA

(71)**Name of Applicant :**
1)SUNPOWER CORPORATION
Address of Applicant :3939 N. First Street San Jose CA 95134 U.S.A.
(72)**Name of Inventor :**
1)HUSSAIN Mohsin
2)LAPORTE Brock
3)UEBEL Udo
4)ZIA Aftab

(57) Abstract :
A system (200) for communicating information on an energy distribution network (100) is disclosed. In one embodiment, the system (200) includes a local supervisor (241) on a communication network, wherein the local supervisor (241) can collect data from one or more energy generation/monitoring devices (15 1-155, 161-165, 171-173, 181- 185). The system (200) also in cludes a command center (210) on the communication network, wherein the command center (210) can generate one or more commands for controlling the one or more energy generation devices. The local supervisor (241) can periodically transmit a data signal indicative of the data to the command center (2 10) via a first channel (20 1) of the communication network at a first interval. The local supervisor (24 1) can also periodically transmit a request for a command to the command center (210) via a second channel (202) of the communication network (200) at a second interval shorter than the first interval. This channel configuration provides effective data communication without a significant increase in the use of network resources.

No. of Pages : 32 No. of Claims : 20

(12) PATENT APPLICATION PUBLICATION
(19) INDIA
(22) Date of filing of Application :08/10/2013
(21) Application No.8746/DELNP/2013 A
(43) Publication Date : 19/12/2014

(54) Title of the invention : METHOD AND APPARATUS FOR EVALUATING A SAMPLE THROUGH VARIABLE ANGLE RAMAN SPECTROSCOPY

(51) International classification :G01N21/65
(31) Priority Document No :13/098140
(32) Priority Date :29/04/2011
(33) Name of priority country :U.S.A.
(86) International Application No :PCT/US2012/035484
Filing Date :27/04/2012
(87) International Publication No :WO 2012/149343
(61) Patent of Addition to Application Number :NA
Filing Date :NA
(62) Divisional to Application Number :NA
Filing Date :NA

(71)**Name of Applicant :**
1)AVOLONTE HEALTH LLC
Address of Applicant :1007 Orange Street Suite 1410 Wilmington Delaware 19801 U.S.A.
(72)**Name of Inventor :**
1)MESSERSCHMIDT Robert G.

(57) Abstract :
Described are systems and methods for variable angle Raman spectroscopy in which electromagnetic radiation will be caused to intersect the sample under investigation at a plurality of angles of incidence so as to provide Raman scattering spectra at each angle. One example use of measuring such spectra at multiple angles of incidence is to enable evaluation at a plurality of depths within the sample. In many implementations the range of the angles of incidence will include and extend to either side of the critical angle.

No. of Pages : 28 No. of Claims : 24

(12) PATENT APPLICATION PUBLICATION
(19) INDIA
(22) Date of filing of Application :08/10/2013
(21) Application No.8747/DELNP/2013 A
(43) Publication Date : 19/12/2014

(54) Title of the invention : VASCULAR CHARACTERIZATION USING ULTRASOUND IMAGING

(51) International classification :A61B8/08,A61B8/06
(31) Priority Document No :61/475550
(32) Priority Date :14/04/2011
(33) Name of priority country :U.S.A.
(86) International Application No :PCT/US2012/033584
Filing Date :13/04/2012
(87) International Publication No :WO 2012/142455
(61) Patent of Addition to Application Number :NA
Filing Date :NA
(62) Divisional to Application Number :NA
Filing Date :NA

(71)**Name of Applicant :**
1)REGENTS OF THE UNIVERSITY OF MINNESOTA
Address of Applicant :Office for Technology Commercialization 1000 Westgate Drive Suite 160 Saint Paul Minnesota 55114 8658 U.S.A.
(72)**Name of Inventor :**
1)EBBINI Emad S.
2)LIU Dalong
3)WAN Yayun
4)CASPER Andrew J.

(57) Abstract :
Ultrasound methods and/or systems provide for the motion tracking of both vessel wall motion and blood flow (e.g. with use of high frame rate ultrasound pulse echo data and speckle tracking both wall motion and flow can be tracked simultaneously).

No. of Pages : 100 No. of Claims : 52

(12) PATENT APPLICATION PUBLICATION
(19) INDIA
(22) Date of filing of Application :09/10/2013
(21) Application No.8786/DELNP/2013 A
(43) Publication Date : 19/12/2014

(54) Title of the invention : COMPUTER SYSTEM CONTROLLER AND NETWORK ACCESS POLICY CONTROL METHOD

(51) International classification :H04L12/56,H04L12/44
(31) Priority Document No :2011091105
(32) Priority Date :15/04/2011
(33) Name of priority country :Japan
(86) International Application No :PCT/JP2012/059471
Filing Date :06/04/2012
(87) International Publication No :WO 2012/141086
(61) Patent of Addition to Application Number :NA
Filing Date :NA
(62) Divisional to Application Number :NA
Filing Date :NA

(71)**Name of Applicant :**
1)NEC CORPORATION
Address of Applicant :7 1 Shiba 5 chome Minato ku Tokyo 1088001 Japan
(72)**Name of Inventor :**
1)KAWAMOTO Masaya

(57) Abstract :
A computer system according to the present invention comprises a controller, and a switch which carries out a relay operation on a received packet which conforms to a flow entry which is set by the controller, the relay operation being regulated with the flow entry. The switch transmits a received packet which does not conform to the flow entry which is set by the switch to the controller. The controller queries authentication information which is included in the received packet and authenticates the received packet. From among the header information of the received packet which is determined to be valid, the controller sets the switch to the flow entry which regulated the relay operation for the packet which includes information which identifies the transmission source of the received packet. Network access policy control in a computer system of an open flow protocol environment is thus made easy.

No. of Pages : 47 No. of Claims : 12

(12) PATENT APPLICATION PUBLICATION
(19) INDIA
(22) Date of filing of Application :09/10/2013
(21) Application No.8774/DELNP/2013 A
(43) Publication Date : 19/12/2014

(54) Title of the invention : CREEP OPTIMIZED UHMWPE FIBER

(51) International classification :D01F6/04,C08F210/02
(31) Priority Document No :11162246.0
(32) Priority Date :13/04/2011
(33) Name of priority country :EPO
(86) International Application No :PCT/EP2012/056079
Filing Date :03/04/2012
(87) International Publication No :WO 2012/139934
(61) Patent of Addition to Application Number :NA
Filing Date :NA
(62) Divisional to Application Number :NA
Filing Date :NA

(71)**Name of Applicant :**
1)DSM IP ASSETS B.V.
Address of Applicant :Het Overloon 1 NL 6411 TE Heerlen Netherlands
(72)**Name of Inventor :**
1)BOESTEN Jorn
2)VLASBLOM Martin Pieter
3)MATLOKA Piotr
4)KIDD Timothy James
5)BERTHOUD Romain
6)HEIJNEN Johannes Hendrikus Marie

(57) Abstract :
The invention relates to a creep optimized ultrahigh molecular weight polyethylene (UHMWPE) fiber obtained by spinning an UHMWPE comprising olefinic branches (OB) and having an elongational stress (ES) and a ratio (OB/1000C / ES) between the number of olefinic branches per thousand carbon atoms (OB/1000C) and the elongational stress (ES) of at least 0.2 wherein said UHMWPE fiber when subjected to a load of 600 MPa at a temperature of 70°C has a creep lifetime of at least 90 hours.

No. of Pages : 28 No. of Claims : 15

(12) PATENT APPLICATION PUBLICATION
(19) INDIA
(22) Date of filing of Application :09/10/2013
(21) Application No.8775/DELNP/2013 A
(43) Publication Date : 19/12/2014

(54) Title of the invention : MODULAR MULTI STORY PRODUCTION PLANT AND METHODS FOR CONSTRUCTING SAME

(51) International classification :E04H5/02,E04H5/08,A23N17/00
(31) Priority Document No :61/502110
(32) Priority Date :28/06/2011
(33) Name of priority country :U.S.A.
(86) International Application No :PCT/EP2012/062527
Filing Date :28/06/2012
(87) International Publication No :WO 2013/000985
(61) Patent of Addition to Application Number :NA
Filing Date :NA
(62) Divisional to Application Number :NA
Filing Date :NA

(71)**Name of Applicant :**
1)DSM IP ASSETS B.V.
Address of Applicant :Het Overloon 1 NL 6411 The Heerlen Netherlands
(72)**Name of Inventor :**
1)DRIESS Markus

(57) Abstract :
A multistory modular production plant (10) includes a vertical stack (12) of production modules (12 1 through 12 5) for supporting production equipment and a vertical stack (14) of operator access modules (14 1 through 14 5) adjacently connected to the vertically stacked production modules to allow operator access to the production modules. The adjacently connected vertical stacks of production modules (12) and operator access modules (14) thereby establish multiple stories of the modular production plant. Stairs (30) and/or an elevator (40) may be provided in the vertical stack of operator access modules to allow an operator to ascent/descend between stories of the plant. In especially preferred embodiments each production module (12) and operator access module (14) is in the form of a rectangular parallelepiped which is sized so as to be accommodated within a standard shipping container. This configuration of modular units thus allows the plant to be more quickly shipped and constructed on site.

No. of Pages : 39 No. of Claims : 24

(12) PATENT APPLICATION PUBLICATION
(19) INDIA
(22) Date of filing of Application :09/10/2013
(21) Application No.8776/DELNP/2013 A
(43) Publication Date : 19/12/2014

(54) Title of the invention : ORTHO FLUORO SUBSTITUTED COMPOUNDS FOR THE TREATMENT OF METABOLIC DISEASES

(51) International classification :C07C57/60,A61P3/10,C07C51/00
(31) Priority Document No :PA 2011 00279
(32) Priority Date :08/04/2011
(33) Name of priority country :Denmark
(86) International Application No :PCT/DK2012/050108
Filing Date :03/04/2012
(87) International Publication No :WO 2012/136221
(61) Patent of Addition to Application Number :NA
Filing Date :NA
(62) Divisional to Application Number :NA
Filing Date :NA

(71)**Name of Applicant :**
1)SYDDANSK UNIVERSITET
Address of Applicant :Campusvej 55 DK 5230 Odense M Denmark
(72)**Name of Inventor :**
1)ULVEN Trond
2)CHRISTIANSEN Elisabeth

(57) Abstract :
There is provided novel fluoro substituted compounds capable of modulating the G protein coupled receptor GPR40 compositions comprising the compounds and methods for their use for controlling insulin levels in vivo and for the treatment of conditions such as type II diabetes hypertension ketoacidosis obesity glucose intolerance and hypercholesterolemia and related disorders associated with abnormally high or low plasma lipoprotein triglyceride or glucose levels.

No. of Pages : 60 No. of Claims : 17

(12) PATENT APPLICATION PUBLICATION
(19) INDIA
(22) Date of filing of Application :09/10/2013
(21) Application No.8777/DELNP/2013 A
(43) Publication Date : 19/12/2014

(54) Title of the invention : SYSTEM FOR CONTROLLING ELECTROCHROMIC GLAZINGS BASED ON IDENTIFIERS

(51) International classification :G02F1/163,E06B9/24
(31) Priority Document No :61/477245
(32) Priority Date :20/04/2011
(33) Name of priority country :U.S.A.
(86) International Application No :PCT/US2012/031857
Filing Date :02/04/2012
(87) International Publication No :WO 2012/145155
(61) Patent of Addition to Application Number :NA
Filing Date :NA
(62) Divisional to Application Number :NA
Filing Date :NA

(71)**Name of Applicant :**
1)SAGE ELECTROCHROMICS INC.
Address of Applicant :One Sage Way Faribault MN 55021 U.S.A.
(72)**Name of Inventor :**
1)GREER Bryan D.
2)SNYKER Mark O.
3)LANPHEAR John
4)LIEBL Troy

(57) Abstract :
The present invention concerns a system for controlling electrochromic glazings embedded in insulated glass units (IGU). It comprises an identification circuit (410) which stores information regarding at least some of the properties of the electrochromic device or its control requirements as well as a control system arranged to monitor the identification system and to use the stored information to apply an appropriate voltage or current to the electrochromic device.

No. of Pages : 24 No. of Claims : 27

(12) PATENT APPLICATION PUBLICATION
(19) INDIA
(22) Date of filing of Application :09/10/2013
(21) Application No.8778/DELNP/2013 A
(43) Publication Date : 19/12/2014

(54) Title of the invention : PROCESS FOR FORMING EXPANDED HEXAGONAL LAYERED MINERALS AND DERIVATIVES USING ELECTROCHEMICAL CHARGING

(51) International classification :C01B31/04,B82Y40/00
(31) Priority Document No :61/570330
(32) Priority Date :14/12/2011
(33) Name of priority country :U.S.A.
(86) International Application No :PCT/SG2012/000440
Filing Date :22/11/2012
(87) International Publication No :WO 2013/089642
(61) Patent of Addition to Application Number :NA
Filing Date :NA
(62) Divisional to Application Number :NA
Filing Date :NA

(71)**Name of Applicant :**
1)NATIONAL UNIVERSITY OF SINGAPORE
Address of Applicant :21 Lower Kent Ridge Road Singapore 119077 Singapore
(72)**Name of Inventor :**
1)LOH Kian Ping
2)WANG Junzhong
3)CHIU Gordon

(57) Abstract :
Processes for forming expanded hexagonal layered minerals (HLMs) and derivatives thereof using electrochemical charging are dis closed. The process includes employing HLM rocks (20) as electrodes (100) immersed in an electrolytic slurry (50) that includes an organic solvent, metal ions and expanded HLM (24). The electrolysis in troduces organic solvent and ions from the metal salt from the slurry into the interlayer spacings that separate the atomic interlayers of the HLM rock, thereby forming l -stage charged HLM that exfoli ates from the HLM rock. The process includes ex panding the electrochemically l -stage charged HLM by applying an expanding force.

No. of Pages : 24 No. of Claims : 25

(12) PATENT APPLICATION PUBLICATION
(19) INDIA
(22) Date of filing of Application :08/10/2013
(21) Application No.8727/DELNP/2013 A
(43) Publication Date : 19/12/2014

(54) Title of the invention : RUBBER COMPOSITION INCLUDING A 1 2 4 TRIAZINE DERIVATIVE

(51) International classification :C08K5/00,C08K5/3492,C07D253/07
(31) Priority Document No :11/01174
(32) Priority Date :14/04/2011
(33) Name of priority country :France
(86) International Application No :PCT/EP2012/056907
Filing Date :16/04/2012
(87) International Publication No :WO 2012/140255
(61) Patent of Addition to Application Number :NA
Filing Date :NA
(62) Divisional to Application Number :NA
Filing Date :NA

(71)**Name of Applicant :**
1)COMPAGNIE GENERALE DES ETABLISSEMENTS MICHELIN
Address of Applicant :12 cours Sablon F 63000 Clermont Ferrand France
2)MICHELIN RECHERCHE ET TECHNIQUE S.A.
(72)**Name of Inventor :**
1)VEYLAND Anne
2)SEEBOTH Nicolas

(57) Abstract :
The invention relates to a rubber composition for manufacturing tires containing one or more diene elastomers one or more reinforcing fillers and a vulcanizing system characterized in that said vulcanizing system includes one or more 1,2,4 triazine compounds selected from among the compounds of formulas (I) and (II). The invention also relates to certain specific 1,2,4 triazine derivatives.

No. of Pages : 67 No. of Claims : 25

(12) PATENT APPLICATION PUBLICATION
(19) INDIA
(22) Date of filing of Application :08/10/2013
(21) Application No.8728/DELNP/2013 A
(43) Publication Date : 19/12/2014

(54) Title of the invention : DEVICE FOR TRANSMITTING FORCE

(51) International classification :F16H47/08
(31) Priority Document No :10 2011 018 236.5
(32) Priority Date :19/04/2011
(33) Name of priority country :Germany
(86) International Application No :PCT/EP2012/001669
Filing Date :18/04/2012
(87) International Publication No :WO 2012/143123
(61) Patent of Addition to Application Number :NA
Filing Date :NA
(62) Divisional to Application Number :NA
Filing Date :NA

(71)**Name of Applicant :**
1)VOITH PATENT GMBH
Address of Applicant :St. Pltener Str. 43 89522 Heidenheim Germany
(72)**Name of Inventor :**
1)GRAF Hartmut

(57) Abstract :
The invention relates to a device (1) for transmitting force from an input shaft (4) connected to a drive assembly (2) having constant speed to an output shaft (6) connected to a working machine (3) having variable speed comprising: a hydrodynamic transducer (20); and a differential transmission designed as a planetary gear unit (1) comprising a ring gear (12) a sun gear (13) and a planet carrier (14) having a plurality of planets (15) as elements of the planetary gear unit. The invention is characterised in that: the hydrodynamic transducer is designed as a counter movement transducer; the input shaft is directly connected to a pump impeller (7) of the hydrodynamic transducer and a first element (14) of the planetary gear unit; a turbine wheel (10) of the hydrodynamic transducer is directly connected to a second element (13) of the planetary gear unit and the output shaft is connected at least indirectly to a third element of the planetary gear unit.

No. of Pages : 12 No. of Claims : 8

(12) PATENT APPLICATION PUBLICATION
(19) INDIA
(22) Date of filing of Application :08/10/2013
(21) Application No.8729/DELNP/2013 A
(43) Publication Date : 19/12/2014

(54) Title of the invention : REFLECTOR ELEMENT AND METHOD AND SYSTEM FOR THE PRODUCTION THEREOF

(51) International classification :F24J2/10
(31) Priority Document No :11382068.2
(32) Priority Date :14/03/2011
(33) Name of priority country :EPO
(86) International Application No :PCT/ES2012/070166
Filing Date :14/03/2012
(87) International Publication No :WO 2012/123611
(61) Patent of Addition to Application Number :NA
Filing Date :NA
(62) Divisional to Application Number :NA
Filing Date :NA

(71)**Name of Applicant :**
1)RIOGLASS SOLAR S.A.
Address of Applicant :Polgono Industrial de Sovilla 4 E 33612 Santa Cruz de Mieres Asturias Spain
(72)**Name of Inventor :**
1)AINZ IBARRONDO Flix

(57) Abstract :
The present invention relates to a reflective element for solar fields having a sandwich type structure comprising a reflective sheet (1) a reinforcement sheet (2) and a layer of foam (3) arranged between the reflective sheet (1) and the reinforcement sheet (2). The method of manufacturing the reflective element is performed in a press with first and second approximation means with the following steps: heating the first approximation means to a temperature T1 arranging a reflective sheet (1) on the first approximation means and acquiring the temperature T1 arranging separating means in the periphery of the reflective sheet (1) arranging a reinforcement sheet (2) in contact with said separating means heating the second approximation means to a temperature T2 different from T1 moving the approximation means closer to one another the second approximation means contacting with the reinforcement sheet (2) and acquiring the temperature T2 and providing a foamable material filling the gap between both sheets subjecting them to pressure and the foamable material acquiring its final consistency in the form of a substantially rigid layer of foam (3) adhered to both sheets.

No. of Pages : 34 No. of Claims : 21

(12) PATENT APPLICATION PUBLICATION
(19) INDIA
(22) Date of filing of Application :10/10/2013
(21) Application No.8799/DELNP/2013 A
(43) Publication Date : 19/12/2014

(54) Title of the invention : SYSTEM COMPRISING A NEBULIZER AND A PACKAGING

(51) International classification :A61M15/00,B65D83/38,B65D83/22
(31) Priority Document No :11004238.9
(32) Priority Date :23/05/2011
(33) Name of priority country :EPO
(86) International Application No :PCT/EP2012/058905
Filing Date :14/05/2012
(87) International Publication No :WO 2012/159914
(61) Patent of Addition to Application Number :NA
Filing Date :NA
(62) Divisional to Application Number :NA
Filing Date :NA

(71)**Name of Applicant :**
1)BOEHRINGER INGELHEIM INTERNATIONAL GMBH
Address of Applicant :Binger Str. 173 55216 Ingelheim Am Rhein Germany
(72)**Name of Inventor :**
1)HOLAKOVSKY Holger
2)HERZBACH Melanie
3)KRENZ Holger
4)RATH Heike

(57) Abstract :
System (100) comprising a nebulizer (1) preferably forming an inhaler for a fluid (2) and a packaging (30) for receiving and holding the nebulizer (1) in a delivery state wherein the nebulizer (1) comprises a container (3) containing the fluid (2) the container (3) being pre installed in the nebulizer (1) and the container being not fluidically connected to the nebulizer (1) in the delivery state and wherein the packaging (30) covers the nebulizer (1) on at least one side and wherein the packaging (30) prevents fluidic connection or opening of the container (3) in the delivery state.

No. of Pages : 46 No. of Claims : 16

(12) PATENT APPLICATION PUBLICATION
(19) INDIA
(22) Date of filing of Application :09/10/2013
(21) Application No.8756/DELNP/2013 A
(43) Publication Date : 19/12/2014

(54) Title of the invention : CLOSED GAS GENERATOR AND MICRO POWER UNIT INCLUDING THE SAME

(51) International classification :F02C7/22
(31) Priority Document No :13/089441
(32) Priority Date :19/04/2011
(33) Name of priority country :U.S.A.
(86) International Application No :PCT/US2012/025555
Filing Date :17/02/2012
(87) International Publication No :WO 2012/145063
(61) Patent of Addition to Application Number :NA
Filing Date :NA
(62) Divisional to Application Number :NA
Filing Date :NA

(71)**Name of Applicant :**
1)RAYTHEON COMPANY
Address of Applicant :870 Winter Street Waltham Massachusetts 02451 1449 U.S.A.
(72)**Name of Inventor :**
1)DANFORTH Jeremy C.
2)LOEHR Richard D.
3)MURPHY Kevin P.

(57) Abstract :
A gas generator assembly includes a propellant chamber housing an amine based propellant. A reaction chamber is coupled with the propellant chamber. The reaction chamber includes a reaction chamber housing and a porous reaction matrix within the reaction chamber housing. The reaction matrix includes a catalyzing agent and the catalyzing agent is configured to non combustibly catalyze the amine based propellant into one or more pressurized gases. An injector is in communication with the propellant chamber. The injector is configured to deliver the amine based propellant to the porous reaction matrix. A discharge nozzle is coupled with the reaction chamber and is configured to accelerate and discharge the one or more pressurized gases. In one example the gas generator is coupled with one or more of an impulse turbine assembly and an electric generator to form a micro power unit.

No. of Pages : 54 No. of Claims : 25

(12) PATENT APPLICATION PUBLICATION
(19) INDIA
(22) Date of filing of Application :09/10/2013
(21) Application No.8757/DELNP/2013 A
(43) Publication Date : 19/12/2014

(54) Title of the invention : WATER BORNE ADHESIVES

(51) International classification :C09J133/00
(31) Priority Document No :61/485893
(32) Priority Date :13/05/2011
(33) Name of priority country :U.S.A.
(86) International Application No :PCT/US2012/037741
Filing Date :14/05/2012
(87) International Publication No :WO 2012/158601
(61) Patent of Addition to Application Number :NA
Filing Date :NA
(62) Divisional to Application Number :NA
Filing Date :NA

(71)**Name of Applicant :**
1)ROHM AND HAAS COMPANY
Address of Applicant :100 Independence Mall West Philadelphia PA 19106 U.S.A.
(72)**Name of Inventor :**
1)CHEN Mai

(57) Abstract :
There is provided a method of bonding a first substrate to a second substrate wherein said method comprises (a) applying a layer of a waterborne adhesive composition to a surface of said first substrate wherein said waterborne adhesive composition comprises one or more vinyl polymer that comprises (i) 0 to 0.4% polymerized units of carboxyl functional monomer by weight based on the weight of said vinyl polymer and (ii) 0.1% to 10% polymerized units of amide monomer by weight based on the weight of said vinyl polymer (b) drying said layer of a waterborne adhesive composition to remove water and (b) contacting a surface of said second substrate to said layer wherein one or both of said first substrate and said second substrate comprises one or more slip agent Also provided is a bonded article made by such a method.

No. of Pages : 18 No. of Claims : 9

(12) PATENT APPLICATION PUBLICATION
(19) INDIA
(22) Date of filing of Application :09/10/2013
(21) Application No.8758/DELNP/2013 A
(43) Publication Date : 19/12/2014

(54) Title of the invention : ORTHO- PHENYLPHENOL COMPOUNDS AS MARKERS FOR HYDROCARBONS AND OTHER FUELS AND OILS

(51) International classification :C10M171/00,C10L1/00
(31) Priority Document No :61/483869
(32) Priority Date :09/05/2011
(33) Name of priority country :U.S.A.
(86) International Application No :PCT/US2012/036734
Filing Date :07/05/2012
(87) International Publication No :WO 2012/154646
(61) Patent of Addition to Application Number :NA
Filing Date :NA
(62) Divisional to Application Number :NA
Filing Date :NA

(71)**Name of Applicant :**
1)ANGUS CHEMICAL COMPANY
Address of Applicant :1500 East Lake Cook Road Buffalo Grove IL 60089 U.S.A.
(72)**Name of Inventor :**
1)GREEN George David
2)SWEDO Raymond

(57) Abstract :
A method for marking a petroleum hydrocarbon or liquid biologically derived fuel by adding to the petroleum hydrocarbon or biologically derived fuel at least one compound having formula (I) wherein G represents an organic functional group having from four to forty carbon atoms.

No. of Pages : 14 No. of Claims : 10

(12) PATENT APPLICATION PUBLICATION
(19) INDIA
(22) Date of filing of Application :09/10/2013
(21) Application No.8759/DELNP/2013 A
(43) Publication Date : 19/12/2014

(54) Title of the invention : ORTHO PHENYLPHENOL COMPOUNDS USEFUL AS HYDROCARBON MARKERS

(51) International classification	:C07C43/205,C07C43/23,C07C69/78
(31) Priority Document No	:61/483867
(32) Priority Date	:09/05/2011
(33) Name of priority country	:U.S.A.
(86) International Application No	:PCT/US2012/036767
Filing Date	:07/05/2012
(87) International Publication No	:WO 2012/154668
(61) Patent of Addition to Application Number	:NA
Filing Date	:NA
(62) Divisional to Application Number	:NA
Filing Date	:NA

(71)**Name of Applicant :**
1)ANGUS CHEMICAL COMPANY
Address of Applicant :1500 East Lake Cook Road Buffalo Grove IL 60089 U.S.A.
(72)**Name of Inventor :**
1)GREEN George David
2)SWEDO Raymond

(57) Abstract :
A compound having formula (I), wherein G1 represents a C4-C22 alkyl or alkenyl group, a C -C 2o aralkyl group or formula (II) wherein G3 is a difunctional C 2-Ci 8 alkyl or alkenyl group, a difunctional C -C 2o aryl group or G3 is absent; provided that G1 is not 2-butyl, n-hexyl, n-octyl, n-dodecyl, n-hexadecyl or 2- phenylethyl.

No. of Pages : 14 No. of Claims : 10

(12) PATENT APPLICATION PUBLICATION
(19) INDIA
(22) Date of filing of Application :10/10/2013
(21) Application No.8801/DELNP/2013 A
(43) Publication Date : 19/12/2014

(54) Title of the invention : RUBBER COMPOSITION INCLUDING A THIAZOLE DERIVATIVE

(51) International classification :C08K5/00
(31) Priority Document No :11/01169
(32) Priority Date :14/04/2011
(33) Name of priority country :France
(86) International Application No :PCT/EP2012/056912
Filing Date :16/04/2012
(87) International Publication No :WO 2012/140258
(61) Patent of Addition to Application Number :NA
Filing Date :NA
(62) Divisional to Application Number :NA
Filing Date :NA

(71)**Name of Applicant :**
1)COMPAGNIE GENERALE DES ETABLISSEMENTS MICHELIN
Address of Applicant :12 cours Sablon F 63000 Clermont Ferrand France
2)MICHELIN RECHERCHE ET TECHNIQUE S.A.
(72)**Name of Inventor :**
1)VEYLAND Anne
2)SEEBOTH Nicolas

(57) Abstract :
The invention relates to a rubber composition for the manufacture of tyres, based on one or more diene elastomers, on one or more reinforcing fillers and on a vulcanization system, characterized in that the said vulcanization system comprises one or more thiazole compounds chosen from the compounds of following formula (I): (I) The invention also relates to certain specific thiazole derivatives.

No. of Pages : 63 No. of Claims : 25

(12) PATENT APPLICATION PUBLICATION
(19) INDIA
(22) Date of filing of Application :07/10/2013
(21) Application No.8673/DELNP/2013 A
(43) Publication Date : 19/12/2014

(54) Title of the invention : INTAKE GAS DISTRIBUTION BOX FOR USE IN AN ENGINE IN PARTICULAR A MOTOR VEHICLE ENGINE AND GAS SUPPLY MODULE COMPRISING SAID BOX

(51) International classification :F02M25/07,F02M35/104,F02B29/04
(31) Priority Document No :1152695
(32) Priority Date :31/03/2011
(33) Name of priority country :France
(86) International Application No :PCT/EP2012/052389
Filing Date :13/02/2012
(87) International Publication No :WO 2012/130514
(61) Patent of Addition to Application Number :NA
Filing Date :NA
(62) Divisional to Application Number :NA
Filing Date :NA

(71)**Name of Applicant :**
1)VALEO SYSTEMES THERMIQUES
Address of Applicant :8 rue Louis Lormand La Verri¨re F 78320 Le Mesnil Saint Denis France
(72)**Name of Inventor :**
1)DE PELSEMAEKER Georges
2)GALLAND Jean Pierre
3)ODILLARD Laurent

(57) Abstract :
The invention relates to an intake gas distribution box for use in an engine in particular a diesel engine said box (18) being intended for a gas supply module of the engine. The box (18) comprises a device (24) for the injection of the recirculated exhaust gases of the engine said box (18) being configured to be mounted on a cylinder head of the engine. The injection device (24) comprises a plurality of injection ports (26.1 26.2 26.3 26.4) provided in a portion of material of the injection device (24). According to the invention the injection device (24) is configured such that the injection ports (26.1 26.2 26.3 26.4) are located in an area substantially half way between the cylinder head and a heat exchanger (16) of the module.

No. of Pages : 21 No. of Claims : 9

(12) PATENT APPLICATION PUBLICATION
(19) INDIA
(22) Date of filing of Application :10/10/2013
(21) Application No.8810/DELNP/2013 A
(43) Publication Date : 19/12/2014

(54) Title of the invention : METHOD AND KIT FOR DEPILATION

(51) International classification :A61K8/06,A61Q9/04,A61Q17/00
(31) Priority Document No :61/479881
(32) Priority Date :28/04/2011
(33) Name of priority country :U.S.A.
(86) International Application No :PCT/US2012/033987
Filing Date :18/04/2012
(87) International Publication No :WO 2012/148740
(61) Patent of Addition to Application Number :NA
Filing Date :NA
(62) Divisional to Application Number :NA
Filing Date :NA

(71)**Name of Applicant :**
1)THE PROCTER & GAMBLE COMPANY
Address of Applicant :One Procter & Gamble Plaza Cincinnati Ohio 45202 U.S.A.
(72)**Name of Inventor :**
1)SMITH Charles Robert
2)SIMPSON Naomi Mary
3)HEWLINS Stuart Andrew

(57) Abstract :
A method of removing hair from skin is provided comprising the steps of: (a) applying a protective composition to an area of skin on which unwanted hair is growing wherein the protective composition comprises an emulsion having a hydrophobic continuous phase and a hydrophilic dispersed phase; (b) applying a depilatory composition to the area of skin to which the protective composition has been applied the depilatory composition comprising a keratin reducing agent.

No. of Pages : 29 No. of Claims : 15

(12) PATENT APPLICATION PUBLICATION
(19) INDIA
(22) Date of filing of Application :10/10/2013
(21) Application No.8811/DELNP/2013 A
(43) Publication Date : 19/12/2014

(54) Title of the invention : HYDROMETHANATION OF A CARBONACEOUS FEEDSTOCK

(51) International classification :C10L3/10,C10K1/04,C10J3/46
(31) Priority Document No :61/492919
(32) Priority Date :03/06/2011
(33) Name of priority country :U.S.A.
(86) International Application No :PCT/US2012/040152
Filing Date :31/05/2012
(87) International Publication No :WO 2012/166879
(61) Patent of Addition to Application Number :NA
Filing Date :NA
(62) Divisional to Application Number :NA
Filing Date :NA

(71)**Name of Applicant :**
1)GREATPOINT ENERGY INC.
Address of Applicant :222 Third Street Suite 2163 Cambridge MA 02142 U.S.A.
(72)**Name of Inventor :**
1)SIRDESHPANDE Avinash

(57) Abstract :
The present invention relates to processes for hydromethanating a carbonaceous feedstock to an acid gas depleted methane enriched synthesis gas with improved efficiency of the acid gas removal treatment.

No. of Pages : 54 No. of Claims : 9

(12) PATENT APPLICATION PUBLICATION
(19) INDIA
(22) Date of filing of Application :10/10/2013
(21) Application No.8812/DELNP/2013 A
(43) Publication Date : 19/12/2014

(54) Title of the invention : IMPROVED CATALYTIC PROCESS FOR PRODUCTION OF PYRIDINE CARBOXYLIC ACID AMIDES

(51) International classification :C07D213/81
(31) Priority Document No :1137/DEL/2011
(32) Priority Date :18/04/2011
(33) Name of priority country :India
(86) International Application No :PCT/IB2012/000745
Filing Date :14/04/2012
(87) International Publication No :WO 2012/143771
(61) Patent of Addition to Application Number :NA
Filing Date :NA
(62) Divisional to Application Number :NA
Filing Date :NA

(71)**Name of Applicant :**
1)JUBILANT LIFE SCIENCES LIMITED
Address of Applicant :Plot 1A Sector 16 A Noida 201 301 UP Uttar Pradesh India
(72)**Name of Inventor :**
1)KUMAR Mahendra
2)SINGH Shailendra Kumar
3)AGARWAL Ashutosh

(57) Abstract :
An improved catalytic process for the production of pyridine carboxylic acid amides by catalytic hydration reaction of pyridine nitriles with solid heterogeneous catalyst wherein the process involve effective utilization and recycling of the catalytic components and reactants.

No. of Pages : 19 No. of Claims : 18

(12) PATENT APPLICATION PUBLICATION
(19) INDIA
(22) Date of filing of Application :10/10/2013
(21) Application No.8813/DELNP/2013 A
(43) Publication Date : 19/12/2014

(54) Title of the invention : CONTROLLED PRODUCTION AND INJECTION

(51) International classification :E21B34/02,E21B33/122
(31) Priority Document No :13/094051
(32) Priority Date :26/04/2011
(33) Name of priority country :U.S.A.
(86) International Application No :PCT/US2012/032130
Filing Date :04/04/2012
(87) International Publication No :WO 2012/148640
(61) Patent of Addition to Application Number :NA
Filing Date :NA
(62) Divisional to Application Number :NA
Filing Date :NA

(71)**Name of Applicant :**
1)HALLIBURTON ENERGY SERVICES INC.
Address of Applicant :10200 Bellaire Blvd. Houston Texas 77072 U.S.A.
(72)**Name of Inventor :**
1)HAILEY Travis Thomas
2)SAETRE Geirmund

(57) Abstract :
A well production and injection string includes a plurality of spaced apart packers each adapted to seal with a wall of the wellbore. A plurality of flow control devices are provided in the string distributed between pairs of adjacent packers. The flow control devices are adapted to communicate flow between an interior and an exterior of the string with less restriction to flow from the interior to the exterior of the string than to flow from the exterior to the interior of the string.

No. of Pages : 24 No. of Claims : 20

(12) PATENT APPLICATION PUBLICATION
(19) INDIA
(22) Date of filing of Application :10/10/2013
(21) Application No.8816/DELNP/2013 A
(43) Publication Date : 19/12/2014

(54) Title of the invention : AD HOC NETWORK USER NODE MANAGEMENT SERVER COMMUNICATION METHOD AND PROGRAM

(51) International classification	:H04W84/22,H04W4/04,H04W40/22
(31) Priority Document No	:2011084510
(32) Priority Date	:06/04/2011
(33) Name of priority country	:Japan
(86) International Application No	:PCT/JP2012/059397
Filing Date	:05/04/2012
(87) International Publication No	:WO 2012/137882
(61) Patent of Addition to Application Number	:NA
Filing Date	:NA
(62) Divisional to Application Number	:NA
Filing Date	:NA

(71)**Name of Applicant :**
1)NEC CORPORATION
Address of Applicant :7 1 Shiba 5 chome Minato ku Tokyo 1088001 Japan
(72)**Name of Inventor :**
1)FUJIMURA Atsushi

(57) Abstract :
Provided i s an ad-hoc network capable of securing a band and a redundant route without incurring cost. An ad-hoc network includes a gateway capable of connecting to a predetermined server via an external network, and a plurality of user nodes which configure the ad-hoc network together with the gateway and transmit data to each of predetermined servers via the gateway. Among the user nodes, a user node having means to connect t o the predetermined servers via the external net work is configured so as to be capable of participation in the ad-hoc network as a second gateway. Other user nodes among the plurality of user nodes select either the first-mentioned gateway or the second gateway on the basis of predetermined rules in order to transmit data to the predetermined server.

No. of Pages : 28 No. of Claims : 10

(12) PATENT APPLICATION PUBLICATION
(19) INDIA
(22) Date of filing of Application :09/10/2013
(21) Application No.8760/DELNP/2013 A
(43) Publication Date : 19/12/2014

(54) Title of the invention : WATER BORNE ADHESIVES

(51) International classification :C09J133/00
(31) Priority Document No :61/485890
(32) Priority Date :13/05/2011
(33) Name of priority country :U.S.A.
(86) International Application No :PCT/US2012/037742
Filing Date :14/05/2012
(87) International Publication No :WO 2012/158602
(61) Patent of Addition to Application Number :NA
Filing Date :NA
(62) Divisional to Application Number :NA
Filing Date :NA

(71)**Name of Applicant :**
1)ROHM AND HAAS COMPANY
Address of Applicant :100 Independence Mall West Philadelphia PA 19106 U.S.A.
(72)**Name of Inventor :**
1)CHEN Mai

(57) Abstract :
There is provided a waterborne adhesive composition comprising a vinyl polymer that comprises a) 0 to 0.4% polymerized units of carboxyl functional monomer by weight based on the weight of said vinyl polymer and (b) 0.1% to 10% polymerized units of sulfonic acid functional monomer by weight based on the weight of said vinyl polymer. Also provided is a method of bonding substrates with such a composition and a bonded article made by such a method.

No. of Pages : 18 No. of Claims : 10

(12) PATENT APPLICATION PUBLICATION
(19) INDIA
(22) Date of filing of Application :09/10/2013
(21) Application No.8761/DELNP/2013 A
(43) Publication Date : 19/12/2014

(54) Title of the invention : PORTABLE COMPLIANCE DISPENSER

(51) International classification :A61L2/00,G01F11/00,G08B21/24
(31) Priority Document No :13/095052
(32) Priority Date :27/04/2011
(33) Name of priority country :U.S.A.
(86) International Application No :PCT/US2012/034227
Filing Date :19/04/2012
(87) International Publication No :WO 2012/148771
(61) Patent of Addition to Application Number :NA
Filing Date :NA
(62) Divisional to Application Number :NA
Filing Date :NA

(71)**Name of Applicant :**
1)GOJO INDUSTRIES INC.
Address of Applicant :One GOJO Plaza Suite 500 P.O. Box 991 Akron OH 44309 U.S.A.
(72)**Name of Inventor :**
1)WEGELIN Jackson W.
2)ARCHER Matthew J.

(57) Abstract :
A portable compliance dispenser provides a compliance module that is removably attached to a replaceable refill container which carries any suitable liquid material such as sanitizer. The compliance module is configured to be worn or carried by an individual and communicates hygiene compliance data to a remote monitoring station when material from the refill container is dispensed.

No. of Pages : 41 No. of Claims : 18

(12) PATENT APPLICATION PUBLICATION
(19) INDIA
(22) Date of filing of Application :09/10/2013
(21) Application No.8762/DELNP/2013 A
(43) Publication Date : 19/12/2014

(54) Title of the invention : PISTON PUMP HAVING FLAT GUIDANCE

(51) International classification :F04B9/02,F04B9/04,F04B13/00
(31) Priority Document No :1153165
(32) Priority Date :12/04/2011
(33) Name of priority country :France
(86) International Application No:PCT/FR2012/050714
Filing Date :03/04/2012
(87) International Publication No :WO 2012/140346
(61) Patent of Addition to Application Number :NA
Filing Date :NA
(62) Divisional to Application Number :NA
Filing Date :NA

(71)**Name of Applicant :**
1)PULSSAR TECHNOLOGIES
Address of Applicant :60 Rue De Wattignies F 75012 Paris France
(72)**Name of Inventor :**
1)ABOUSALEH Khaled

(57) Abstract :
The invention relates to a pumping device comprising a working chamber and a piston provided to slide in said working chamber so as to vary the useful volume of the chamber during pumping, comprising anti-rotation means for the piston. Advantageously, said antirotation means comprise an index (107) mounted radially with respect to the axis of the piston and the device comprises a longitudinal slot (108), said index being provided so as to move in said slot. Advantageously, the index (107) has two approximately parallel planar faces that extend longitudinally.

No. of Pages : 14 No. of Claims : 10

(12) PATENT APPLICATION PUBLICATION
(19) INDIA
(22) Date of filing of Application :09/10/2013
(21) Application No.8763/DELNP/2013 A
(43) Publication Date : 19/12/2014

(54) Title of the invention : CATIONIC ELECTRODEPOSITION COATING COMPOSITION AND COATED ARTICLE

(51) International classification :C09D5/44,B32B27/38,C09D7/12
(31) Priority Document No :2011101644
(32) Priority Date :28/04/2011
(33) Name of priority country :Japan
(86) International Application No :PCT/JP2012/059258
Filing Date :04/04/2012
(87) International Publication No :WO 2012/147478
(61) Patent of Addition to Application Number :NA
Filing Date :NA
(62) Divisional to Application Number :NA
Filing Date :NA

(71)**Name of Applicant :**
1)TOYOTA JIDOSHA KABUSHIKI KAISHA
Address of Applicant :1 Toyota cho Toyota shi Aichi 4718571 Japan
2)KANSAI PAINT CO. LTD.
(72)**Name of Inventor :**
1)OKADA Eisaku
2)TAKEZOE Kouji
3)HAYASHI Hirokazu

(57) Abstract :
The present invention provides a cation! electrodeposition coating composition comprising: a specific amino group-containing modified epoxy resin (A); a blocked polyisocyanate curing agent (B); a water-soluble zirconium compound (C); and sulfamic acid, wherein the water-soluble zirconium compound (C) is present in an amount of 10 to 10,000 ppm, calculated as the mass of the elemental zirconium, relative to the mass of the cationic electrodeposition coating composition

No. of Pages : 31 No. of Claims : 3

(12) PATENT APPLICATION PUBLICATION
(19) INDIA
(22) Date of filing of Application :09/10/2013
(21) Application No.8764/DELNP/2013 A
(43) Publication Date : 19/12/2014

(54) Title of the invention : A METHOD AND APPARATUS CAPABLE OF EFFECTIVELY ANALYZING SAMPLES AND COLLECTING SAMPLE FRACTIONS

(51) International classification :G01N 30/82
(31) Priority Document No :61/005,590
(32) Priority Date :05/12/2007
(33) Name of priority country :U.S.A.
(86) International Application No :PCT/US2008/013359
Filing Date :04/12/2008
(87) International Publication No :WO 2009/075764
(61) Patent of Addition to Application Number :NA
Filing Date :NA
(62) Divisional to Application Number :6976/DELNP/2008
Filed on :30/10/2009

(71)**Name of Applicant :**
1)ALLTECH ASSOCIATES, INC.
Address of Applicant :7500 GRACE DRIVE, COLUMBIA, MARYLAND 21044-4098, U.S.A
(72)**Name of Inventor :**
1)JAMES M. ANDERSON, JR.
2)RAAIDAH SAARI-NORHAUS
3)WASHINGTON MENDOZA
4)JOSEF P. ;BYSTRON
5)DIRK HELGEMO
6)BRUCE D. BLACK
7)NEIL R. PICHA
8)DENNIS K. MC CREARY
9)SHELDON NELSON
10)CARL H. HOPPE

(57) Abstract :
The present invention relates to a method of separating a first material from a second material, the method comprising: mixing the first material and the second material in a slurry with a beneficiation composition, wherein the beneficiation composition comprises at least one green collector and at least one fatty acid by-product derived from a biodiesel manufacturing process or at least one fatty acid by-product derived from transesterification reactions involving triglycerides; providing air bubbles in the slurry to form bubble-particle aggregates with the first material; and allowing the bubble-particle aggregates to be separated from the second material.

No. of Pages : 56 No. of Claims : 18

(12) PATENT APPLICATION PUBLICATION
(19) INDIA
(22) Date of filing of Application :09/10/2013
(21) Application No.8765/DELNP/2013 A
(43) Publication Date : 19/12/2014

(54) Title of the invention : A METHOD AND APPARATUS OF EFFECTIVELY ANALYZING SAMPLES COMPONENTS

(51) International classification :G01N 30/82
(31) Priority Document No :61/005,590
(32) Priority Date :05/12/2007
(33) Name of priority country :U.S.A.
(86) International Application No :PCT/US2008/013359
Filing Date :04/12/2008
(87) International Publication No :WO 2009/075764
(61) Patent of Addition to Application Number :NA
Filing Date :NA
(62) Divisional to Application Number :6976/DELNP/2009
Filed on :30/10/2009

(71)**Name of Applicant :**
1)ALLTECH ASSOCIATES, INC.
Address of Applicant :7500 GRACE DRIVE, COLUMBIA, MARYLAND 21044-4098, USA
(72)**Name of Inventor :**
1)JAMES M. ANDERSON, JR.
2)RAAIDAH SAARI-NORHAUS
3)WASHINGTON MENDOZA
4)JOSEF P. BYSTRON
5)DIRK HELGEMO
6)BRUCE D. BLACK
7)NEIL R. PICHA
8)DENNIS K. MC CREARY
9)SHELDON NELSON
10)CARL H. POPPE

(57) Abstract :
Methods and apparatus for analyzing a sample using at least one detector are disclosed.

No. of Pages : 57 No. of Claims : 20

(12) PATENT APPLICATION PUBLICATION
(19) INDIA
(22) Date of filing of Application :03/10/2013
(21) Application No.8581/DELNP/2013 A
(43) Publication Date : 19/12/2014

(54) Title of the invention : ROTARY WING AIRCRAFT INSTRUMENTED MOTION CONTROL BEARINGS

(51) International classification :F16C27/06,B23P17/00
(31) Priority Document No :61/472923
(32) Priority Date :07/04/2011
(33) Name of priority country :U.S.A.
(86) International Application No :PCT/US2012/032249
Filing Date :05/04/2012
(87) International Publication No :WO 2012/138816
(61) Patent of Addition to Application Number :NA
Filing Date :NA
(62) Divisional to Application Number :NA
Filing Date :NA

(71)**Name of Applicant :**
1)LORD CORPORATION
Address of Applicant :Attn: IP Legal Dept. 111 Lord Drive Cary North Carolina 27511 U.S.A.
(72)**Name of Inventor :**
1)ALLRED Charles
2)DOWNING Marshall
3)FUHRER Zachary
4)JOLLY Mark
5)SMITH Matthew

(57) Abstract :
Motion control bearings and methods making such with the capability to monitor properties therein is provided. Devices and methods for creating and using motion control bearings for rotary wing aircraft in particular are disclosed using wireless communication and monitoring of multiple load motion and health related information items related to the bearing and blade at the wing hub. Static and dynamic blade orientation provides additional information on flight regime thrust vectors and gross vehicle weight. Power is provided using kinetic energy power harvesting.

No. of Pages : 56 No. of Claims : 24

(12) PATENT APPLICATION PUBLICATION
(19) INDIA
(22) Date of filing of Application :03/10/2013
(21) Application No.8582/DELNP/2013 A
(43) Publication Date : 19/12/2014

(54) Title of the invention : COMPOUNDS AND METHODS OF USE IN ABLATIVE RADIOTHERAPY

(51) International classification :A61K31/551,A61K31/4188,A61K51/04
(31) Priority Document No :61/450969
(32) Priority Date :09/03/2011
(33) Name of priority country :U.S.A.
(86) International Application No :PCT/US2012/028475
Filing Date :09/03/2012
(87) International Publication No :WO 2012/122471
(61) Patent of Addition to Application Number :NA
Filing Date :NA
(62) Divisional to Application Number :NA
Filing Date :NA

(71)**Name of Applicant :**
1)THE JOHNS HOPKINS UNIVERSITY
Address of Applicant :3400 North Charles Street Baltimore Maryland 21218 U.S.A.
(72)**Name of Inventor :**
1)RAMAN Venu
2)TRAN Phuoc

(57) Abstract :
Provided herein is the compound RK 33 or a salt solvate stereoisomer or derivative thereof which is shown to be an inhibitor if the DEAD box helicase DDX3 in mammalian cells. RK 33 is also provided herein for use as a radiation dose sensitizer in a subject suffering from a proliferative disease and undergoing radiation therapy. Methods of treatment of proliferative diseases such as cancer with a combination of RK 33 and radiotherapy methods such as stereotactic ablative radiotherapy (SABR) are also provided.

No. of Pages : 36 No. of Claims : 12

(12) PATENT APPLICATION PUBLICATION
(19) INDIA
(22) Date of filing of Application :03/10/2013
(21) Application No.8583/DELNP/2013 A
(43) Publication Date : 19/12/2014

(54) Title of the invention : METHODS AND COMPOSITIONS FOR IMPROVING ANTIANGIOGENIC THERAPY WITH ANTI INTEGRINS

(51) International classification :A61K39/00,A61K39/395,A61K38/18
(31) Priority Document No :61/466791
(32) Priority Date :23/03/2011
(33) Name of priority country :U.S.A.
(86) International Application No :PCT/US2012/030204
Filing Date :22/03/2012
(87) International Publication No :WO 2012/129448
(61) Patent of Addition to Application Number :NA
Filing Date :NA
(62) Divisional to Application Number :NA
Filing Date :NA

(71)**Name of Applicant :**
1)THE REGENTS OF THE UNIVERSITY OF CALIFORNIA
Address of Applicant :1111 Franklin Street 12th Floor Oakland CA 94607 5200 U.S.A.
(72)**Name of Inventor :**
1)CARBONELL Warren Shawn
2)AGHI Manish Kumar

(57) Abstract :
Described here are methods and compositions for treating tumors and metastases that improve anti angiogenesis therapy. By inhibiting these mechanisms in a biological system with an anti beta one integrin composition in combination with an antiangiogenic composition tumors and metastases may be deprived of an adequate blood supply thereby resulting in tumor cell growth arrest and possibly regression including tumor cell death. The present compositions comprise an anti beta one integrin agent in combination with an anti VEGF agent in a pharmaceutical composition or compositions. Methods of treatment and of imaging are also described.

No. of Pages : 49 No. of Claims : 28

(12) PATENT APPLICATION PUBLICATION
(19) INDIA
(22) Date of filing of Application :03/10/2013
(21) Application No.8584/DELNP/2013 A
(43) Publication Date : 19/12/2014

(54) Title of the invention : COMPOSITE TOOLING CONTAINING CARBON NANOTUBES AND PRODUCTION OF PARTS THEREFROM

(51) International classification :B29C47/00,B29C47/06
(31) Priority Document No :13/102015
(32) Priority Date :05/05/2011
(33) Name of priority country :U.S.A.
(86) International Application No :PCT/US2012/032619
Filing Date :06/04/2012
(87) International Publication No :WO 2012/151027
(61) Patent of Addition to Application Number :NA
Filing Date :NA
(62) Divisional to Application Number :NA
Filing Date :NA

(71)**Name of Applicant :**
1)APPLIED NANOSTRUCTURED SOLUTIONS LLC
Address of Applicant :2323 Eastern Blvd. Baltimore MD 21220 U.S.A.
(72)**Name of Inventor :**
1)JONES Melissa L.

(57) Abstract :
Toolings containing a composite having a coefficient of thermal expansion of less than about 5 ppm/°C are described. The composites contain a matrix material and a carbon nanotube material and are operable for forming a part thereon. Methods for forming such toolings and use of such toolings to form parts thereon are also described. The carbon nanotube material can be a carbon nanotube infused fiber material. Use of the carbon nanotube material in the tooling allows decreased curing and consolidation process times of the part to be realized.

No. of Pages : 42 No. of Claims : 30

(12) PATENT APPLICATION PUBLICATION
(19) INDIA
(22) Date of filing of Application :10/10/2013
(21) Application No.8821/DELNP/2013 A
(43) Publication Date : 19/12/2014

(54) Title of the invention : HYDROPROCESSING PROCESS USING INCREASING CATALYST VOLUME ALONG SUCCESSIVE CATALYST BEDS IN LIQUID FULL REACTORS

(51) International classification :C10G45/22,C10G65/04,C10G65/12
(31) Priority Document No :13/097694
(32) Priority Date :29/04/2011
(33) Name of priority country :U.S.A.
(86) International Application No :PCT/US2012/035823
Filing Date :30/04/2012
(87) International Publication No :WO 2012/149542
(61) Patent of Addition to Application Number :NA
Filing Date :NA
(62) Divisional to Application Number :NA
Filing Date :NA

(71)**Name of Applicant :**
1)E. I. DU PONT DE NEMOURS AND COMPANY
Address of Applicant :1007 Market Street Wilmington Delaware 19898 U.S.A.
(72)**Name of Inventor :**
1)DINDI Hasan
2)LAMB Brian Paul
3)MURILLO Luis Eduardo
4)BOEGER Brian
5)CATON Jeffrey D.

(57) Abstract :
The present invention provides a process for hydroprocessing hydrocarbons comprising two or more catalyst beds disposed in sequence and wherein the catalyst volume increases in each subsequent catalyst bed. The process operates as a liquid full process wherein all of the hydrogen dissolves in the liquid phase. Hydrocarbons can be converted in the process to provide a liquid product including clean fuels with multiple desired properties such as low density and high cetane number.

No. of Pages : 40 No. of Claims : 19

(12) PATENT APPLICATION PUBLICATION
(19) INDIA
(22) Date of filing of Application :10/10/2013
(21) Application No.8800/DELNP/2013 A
(43) Publication Date : 19/12/2014

(54) Title of the invention : METHOD OF FORMING A SUBSTRATE FOR A SPORTS SURFACE OF A SPORTS PITCH SUCH A SUBSTRATE AS WELL AS A SPORTS PITCH PROVIDED WITH SUCH SUBSTRATE

(51) International classification :E01C13/02
(31) Priority Document No :1105755.1
(32) Priority Date :05/04/2011
(33) Name of priority country :U.K.
(86) International Application No :PCT/NL2012/050217
Filing Date :02/04/2012
(87) International Publication No :WO 2012/138216
(61) Patent of Addition to Application Number :NA
Filing Date :NA
(62) Divisional to Application Number :NA
Filing Date :NA

(71)**Name of Applicant :**
1)TEN CATE THIOLON B.V.
Address of Applicant :G. van der Muelenweg 2 NL 7443 RE Nijverdal Netherlands
(72)**Name of Inventor :**
1)CRAVEN Robin John

(57) Abstract :
The invention relates to a method of forming a substrate for a sports surface of a sports pitch. The invention also relates to a substrate obtained with the method according to the invention. Furthermore the invention also relates to a sports pitch provided with such substrate. According to the invention the method comprise the steps of: a) Agglomerating plastics materials; b) Granulating the agglomerated plastics materials to form granules having a predetermined range of sizes; c) In situ coating the granules with a binding material so that they form a fluent material; d) Forming a layer of the fluent material on the site of the sports pitch; and e) Setting the laid material such that the granules adhere where they contact each other to form a voided water permeable structure.

No. of Pages : 31 No. of Claims : 10

(12) PATENT APPLICATION PUBLICATION
(19) INDIA
(22) Date of filing of Application :10/10/2013

(21) Application No.8830/DELNP/2013 A
(43) Publication Date : 19/12/2014

(54) Title of the invention : STEERABLE DELIVERY SHEATHS

(51) International classification :A61M25/092,A61B17/34
(31) Priority Document No :61/482018
(32) Priority Date :03/05/2011
(33) Name of priority country :U.S.A.
(86) International Application No :PCT/US2012/036312
Filing Date :03/05/2012
(87) International Publication No :WO 2012/151396
(61) Patent of Addition to Application Number :NA
Filing Date :NA
(62) Divisional to Application Number :NA
Filing Date :NA

(71)**Name of Applicant :**
1)SHIFAMED HOLDINGS LLC
Address of Applicant :745A Camden Avenue Campbell CA 95008 U.S.A.
(72)**Name of Inventor :**
1)SALAHIEH Amr
2)LEPAK Jonah
3)LEUNG Emma
4)SAUL Tom
5)DUERI Jean Pierre
6)DE LA MENARDIERE Brice Arnault
7)BALDWIN Clayton
8)TRAUTMAN Joseph Creagan

(57) Abstract :
Steerable medical delivery devices and their methods of use.

No. of Pages : 72 No. of Claims : 41

(12) PATENT APPLICATION PUBLICATION
(19) INDIA
(22) Date of filing of Application :10/10/2013
(21) Application No.8831/DELNP/2013 A
(43) Publication Date : 19/12/2014

(54) Title of the invention : CARBON SPARK EVAPORATION

(51) International classification :H01J37/32
(31) Priority Document No :10 2011 016 681.5
(32) Priority Date :11/04/2011
(33) Name of priority country :Germany
(86) International Application No :PCT/EP2012/001322
Filing Date :26/03/2012
(87) International Publication No :WO 2012/139707
(61) Patent of Addition to Application Number :NA
Filing Date :NA
(62) Divisional to Application Number :NA
Filing Date :NA

(71)**Name of Applicant :**
1)OERLIKON TRADING AG TRBBACH
Address of Applicant :Hauptstrasse 53 CH 9477 Tr¼bbach Switzerland
(72)**Name of Inventor :**
1)RAMM J¼rgen
2)WIDRIG Beno
3)RUHM Kurt

(57) Abstract :
The invention relates to a method for operating a pulsed discontinuous spark discharge. The spark is fed via a capacitor. Between the pulses there are switched-off time intervals during which no spark current flows. Within the pulses, that is to say during the switchedon time intervals, the supply of charge is stopped upon a current threshold being reached and is restarted, with the result that subpulses occur within the pulses. The time intervals and subpulses are chosen according to the invention such that when the capacitor is switched on again, the spark discharge readily ignites again.

No. of Pages : 30 No. of Claims : 7

(12) PATENT APPLICATION PUBLICATION
(19) INDIA
(22) Date of filing of Application :10/10/2013
(21) Application No.8832/DELNP/2013 A
(43) Publication Date : 19/12/2014

(54) Title of the invention : SYSTEM FOR COATING IN PARTICULAR FOR PAINTING ARTICLES IN PARTICULAR VEHICLE BODIES

(51) International classification :B05D3/12,B05D7/14,B24C1/00
(31) Priority Document No :10 2011 103 117.4
(32) Priority Date :01/06/2011
(33) Name of priority country :Germany
(86) International Application No :PCT/EP2012/002185
Filing Date :23/05/2012
(87) International Publication No :WO 2012/163491
(61) Patent of Addition to Application Number :NA
Filing Date :NA
(62) Divisional to Application Number :NA
Filing Date :NA

(71)**Name of Applicant :**
1)EISENMANN AG
Address of Applicant :T¼binger Str. 81 71032 Bblingen Germany
(72)**Name of Inventor :**
1)ALBRECHT Markus
2)TIETZE Frank

(57) Abstract :
The invention relates to a system for coating articles (4) which in known manner comprises a coating booth (1), a conveyor system (5), which guides the articles (4) to be coated through the coating booth (2), and at least one application unit (8, 9), which is carried and guided by a handling device (6, 7). A central supply unit (14) comprises a tank (14b) for storing CO2 in liquid or solid form and conveying means, which are able to remove CO2 from the tank (14b) and supply it at a suitable pressure to a collecting line (13). Said collecting line (13) is connected to at least one cleaning apparatus (10, 11), which in turn comprises at least one nozzle of suitable design for delivering CO2 for cleaning purposes. Under program control a relative movement between the nozzle and the application unit (8, 9) is induced, such that all surfaces of the application unit (8, 9) to be cleaned can be reached by CO2. In this manner a complete automation of the cleaning of the outer surfaces of the application unit (8, 9) and optionally adjacent regions of the handling device (6, 7) is possible.

No. of Pages : 27 No. of Claims : 12

(12) PATENT APPLICATION PUBLICATION
(19) INDIA
(22) Date of filing of Application :10/10/2013
(21) Application No.8833/DELNP/2013 A
(43) Publication Date : 19/12/2014

(54) Title of the invention : METHODS FOR ISOLATING AND QUANTIFYING ANTIGEN FROM VACCINES

(51) International classification :C07K14/005,C12N7/00,G01N33/68
(31) Priority Document No :61/477835
(32) Priority Date :21/04/2011
(33) Name of priority country :U.S.A.
(86) International Application No :PCT/US2012/034054
Filing Date :18/04/2012
(87) International Publication No :WO 2012/145386
(61) Patent of Addition to Application Number :NA
Filing Date :NA
(62) Divisional to Application Number :NA
Filing Date :NA

(71)**Name of Applicant :**
1)BAXTER INTERNATIONAL INC.
Address of Applicant :One Baxter Parkway Deerfield IL 60015 U.S.A.
2)BAXTER HEALTHCARE S.A.
(72)**Name of Inventor :**
1)GRANINGER Michael
2)KALIWODA Martin

(57) Abstract :
The disclosure relates to the development of improved methods for quantifying antigen in a vaccine composition in the absence of available antigen standards. More specifically the disclosure provides fast and robust methods of separating antigens from vaccine compositions comprising the steps of solubilizing antigen without detergent and without alkylation using acidification to prevent antigen subtypes from binding again isolating antigen subtypes with chromatography and quantifiying the eluted antigen with amino acid analysis. The methods of the disclosure are applicable for use with a variety of antigens thereby providing an improved method in the art of vaccine manufacturing to date.

No. of Pages : 37 No. of Claims : 32

(12) PATENT APPLICATION PUBLICATION
(19) INDIA
(22) Date of filing of Application :09/10/2013
(21) Application No.8784/DELNP/2013 A
(43) Publication Date : 19/12/2014

(54) Title of the invention : A MICROPROCESSOR BASED SYSTEM FOR PROVIDING A MEDIA PLAYER WITH ACCESS TO REMOTELY STORED DIGITAL MEDIA CONTENT

(51) International classification	:G06F17/30,G06K19/077,H04N21/41
(31) Priority Document No	:1105573.8
(32) Priority Date	:01/04/2011
(33) Name of priority country	:U.K.
(86) International Application No	:PCT/GB2012/050740
Filing Date	:02/04/2012
(87) International Publication No	:WO 2012/131400
(61) Patent of Addition to Application Number	:NA
Filing Date	:NA
(62) Divisional to Application Number	:NA
Filing Date	:NA

(71)**Name of Applicant :**
1)OMNIFONE LTD
Address of Applicant :Island Studios 47 British Grove London W4 2NL U.K.
(72)**Name of Inventor :**
1)SANT Philip
2)KNIGHT Mark
3)BLACK Simon

(57) Abstract :
A microprocessor based system provides a media player with access to remotely stored digital media content and/or its associated metadata. The system is capable of accessing the content so that the media player is provided by the system with a suitable interface accessible by that media player for interacting with the content. The system may be packaged as a USB memory stick and can be inserted into for example a PC running a legacy media player with no intrinsic ability to access remotely stored content. The PC can in this way be enabled to access the remote content.

No. of Pages : 43 No. of Claims : 45

(12) PATENT APPLICATION PUBLICATION
(19) INDIA
(22) Date of filing of Application :10/10/2013

(21) Application No.8838/DELNP/2013 A
(43) Publication Date : 19/12/2014

(54) Title of the invention : SOLAR ENERGY SYSTEM

(51) International classification :F03G6/00,F03G6/06
(31) Priority Document No :211695
(32) Priority Date :13/03/2011
(33) Name of priority country :Israel
(86) International Application No :PCT/IL2012/000116
Filing Date :13/03/2012
(87) International Publication No :WO 2012/123934
(61) Patent of Addition to Application Number :NA
Filing Date :NA
(62) Divisional to Application Number :NA
Filing Date :NA

(71)**Name of Applicant :**
1)SADEH Abraham
Address of Applicant :4 Wingate St. 43587 Raanana Israel
(72)**Name of Inventor :**
1)SADEH Abraham

(57) Abstract :
A solar energy system comprising: solar collector having thermo oil piping and three thermo oil valves; three tanks each having steam inlet and outlet valves; an electric generator device downstream of the three tanks; and a controller wherein a flow of thermo oil is alternatively controllable to flow into each of the three tanks wherein fluid in the three tanks is alternatively heatable to a gaseous phase and providable to the electric generator device for producing electrical energy.

No. of Pages : 13 No. of Claims : 17

(12) PATENT APPLICATION PUBLICATION
(19) INDIA
(22) Date of filing of Application :10/10/2013
(21) Application No.8839/DELNP/2013 A
(43) Publication Date : 19/12/2014

(54) Title of the invention : CONTROL OF DYNAMIC BUS VOLTAGE IN AN INTERMEDIATE BUS ARCHITECTURE POWER SYSTEM

(51) International classification :H02J1/08,G06F1/32
(31) Priority Document No :NA
(32) Priority Date :NA
(33) Name of priority country :NA
(86) International Application No :PCT/EP2011/056369
Filing Date :20/04/2011
(87) International Publication No :WO 2012/143050
(61) Patent of Addition to Application Number :NA
Filing Date :NA
(62) Divisional to Application Number :NA
Filing Date :NA

(71)**Name of Applicant :**
1)TELEFONAKTIEBOLAGET L M ERICSSON (PUBL)
Address of Applicant :S 164 83 Stockholm Sweden
(72)**Name of Inventor :**
1)MALMBERG Jonas
2)BORGENGREN Henrik
3)KARLSSON Magnus
4)KULLMAN Anders
5)PERSSON Oscar
6)WAHLEDOW Fredrik

(57) Abstract :
To reduce power loss in an intermediate bus architecture power system an intermediate bus converter is provided which converts an input voltage to an intermediate bus voltage using a converting unit; receives a signal indicative of an output of a converting unit; determines an intermediate bus voltage to reduce power loss in dependence upon the signal indicative of an output of the converting unit; generates a control signal to control the converting unit to convert the input voltage to the determined intermediate bus voltage; and generates an intermediate bus voltage in dependence upon the control signal.

No. of Pages : 28 No. of Claims : 18

(12) PATENT APPLICATION PUBLICATION
(19) INDIA
(22) Date of filing of Application :11/10/2013
(21) Application No.8841/DELNP/2013 A
(43) Publication Date : 19/12/2014

(54) Title of the invention : ELECTRONIC APPARATUS DISPLAY METHOD AND PROGRAM

(51) International classification :G06F3/048
(31) Priority Document No :2011092917
(32) Priority Date :19/04/2011
(33) Name of priority country :Japan
(86) International Application No :PCT/JP2012/002483
Filing Date :10/04/2012
(87) International Publication No :WO 2012/144160
(61) Patent of Addition to Application Number :NA
Filing Date :NA
(62) Divisional to Application Number :NA
Filing Date :NA

(71)**Name of Applicant :**
1)SONY CORPORATION
Address of Applicant :1 7 1 Konan Minato ku Tokyo 1080075 Japan
(72)**Name of Inventor :**
1)ZHANG Xiaoxue
2)VLADIMIR Khokhlov

(57) Abstract :
According to an illustrative embodiment an electronic apparatus is provided. The apparatus includes a display and an input apparatus operable to detect a gesture on the display. When the display is displaying a first page and the input apparatus detects a drag operation the display displays a second page in response to the drag operation.

No. of Pages : 28 No. of Claims : 20

(12) PATENT APPLICATION PUBLICATION
(19) INDIA
(22) Date of filing of Application :11/10/2013
(21) Application No.8842/DELNP/2013 A
(43) Publication Date : 19/12/2014

(54) Title of the invention : REINFORCED STRUCTURAL ELEMENT MADE OF PLASTIC IN PARTICULAR IN THE VEHICLE INTERIOR DESIGN FIELD

(51) International classification :B29C70/08,B60N2/68,B60N2/70
(31) Priority Document No :10 2011 017 281.5
(32) Priority Date :15/04/2011
(33) Name of priority country :Germany
(86) International Application No :PCT/EP2012/001096
Filing Date :12/03/2012
(87) International Publication No :WO 2012/139689
(61) Patent of Addition to Application Number :NA
Filing Date :NA
(62) Divisional to Application Number :NA
Filing Date :NA

(71)**Name of Applicant :**
1)JOHNSON CONTROLS GMBH
Address of Applicant :Industriestrae 20 30 51399 Burscheid Germany
(72)**Name of Inventor :**
1)GRO Bernd
2)WERNER Hans Georg
3)PARUCHURI Sreenivas

(57) Abstract :
The invention relates to a vehicle structural element made of plastic which has at least one carbon fiber reinforced region and at least one fiberglass reinforced region. The invention further relates to a method for producing the vehicle structural element wherein a pre heated carbon fiber reinforced region and a pre heated fiberglass reinforced region are placed in a press and shaped.

No. of Pages : 11 No. of Claims : 10

(12) PATENT APPLICATION PUBLICATION
(19) INDIA
(22) Date of filing of Application :11/10/2013
(21) Application No.8844/DELNP/2013 A
(43) Publication Date : 19/12/2014

(54) Title of the invention : METHOD FOR PRODUCING STEEL SHEET

(51) International classification :B21B37/28,B21B37/76,B21B45/02
(31) Priority Document No :NA
(32) Priority Date :NA
(33) Name of priority country :NA
(86) International Application No :PCT/JP2012/081634
Filing Date :06/12/2012
(87) International Publication No :WO 2014/087516
(61) Patent of Addition to Application Number :NA
Filing Date :NA
(62) Divisional to Application Number :NA
Filing Date :NA

(71)**Name of Applicant :**
1)NIPPON STEEL & SUMITOMO METAL CORPORATION
Address of Applicant :6 1 Marunouchi 2 chome Chiyoda ku Tokyo 1008071 Japan
(72)**Name of Inventor :**
1)AKASHI Tooru
2)ITOH Takeo
3)KASAI Daisuke
4)OGAWA Shigeru
5)KURIYAMA Shingo

(57) Abstract :
This method for producing a steel sheet comprises: a hot rolling step for obtaining a hot rolled steel sheet by subjecting a steel material to hot rolling with a finishing roller; and a cooling step for cooling the hot rolled steel sheet. The hot rolling step comprises: a target steepness setting step for setting a target steepness of the edge waved shape of the hot rolled steel sheet on the basis of first correlation data which indicates the correlation between the steepness of the edge waved shape of the hot rolled steel sheet and the temperature standard deviation Y; and a shape control step for controlling an operation parameter of the finishing roller such that the steepness of the edge waved shape matches the target steepness.

No. of Pages : 101 No. of Claims : 19

(12) PATENT APPLICATION PUBLICATION
(19) INDIA
(22) Date of filing of Application :09/10/2013
(21) Application No.8790/DELNP/2013 A
(43) Publication Date : 19/12/2014

(54) Title of the invention : PROCESS AND PLANT FOR BIOLOGICAL PURIFICATION OF COKING PLANT WASTEWATER

(51) International classification :C02F3/30,C02F3/12,C02F103/36
(31) Priority Document No :10 2011 001 962.6
(32) Priority Date :11/04/2011
(33) Name of priority country :Germany
(86) International Application No :PCT/EP2012/055986
Filing Date :02/04/2012
(87) International Publication No :WO 2012/139917
(61) Patent of Addition to Application Number :NA
Filing Date :NA
(62) Divisional to Application Number :NA
Filing Date :NA

(71)**Name of Applicant :**
1)THYSSENKRUPP UHDE GMBH
Address of Applicant :Friedrich Uhde Strae 15 44141 Dortmund Germany
(72)**Name of Inventor :**
1)THIELERT Holger

(57) Abstract :
The invention relates to a process for the biological purification of coking plant wastewater that is loaded with nitrogen compounds, cyanides, phenols and sulphides. The coking plant wastewater, for removal of pollutants that inhibit a nitrification, is fed together with a biomasscontaining stream of matter to a detoxification reactor that has a gas-treatment zone and a reaction zone. The feed mixture supplied to the detoxification reactor is exposed in the gas-treatment zone to a gaseous oxidizing agent. A stream of matter enriched with the oxidizing agent is fed to the reaction zone in which cyanides and other pollutants inhibiting the nitrification are biodegraded. A stream of matter is withdrawn from the reaction zone and returned to the detoxification reactor. In addition, a wastewater stream from the detoxification reactor is separated by a membrane filtration into a biomass-containing retentate stream and a purified permeate stream. From the retentate stream, a substream which entrains excess sludge is discharged. The retentate stream, after separating off the substream, is recirculated to the detoxification reactor. The permeate stream is further purified by nitrification and subsequent denitrification.

No. of Pages : 18 No. of Claims : 14

CONTINUED TO PART- 2

(12) PATENT APPLICATION PUBLICATION
(19) INDIA
(22) Date of filing of Application :09/10/2013
(21) Application No.8791/DELNP/2013 A
(43) Publication Date : 19/12/2014

(54) Title of the invention : NETWORK TRANSPOSE BOX AND SWITCH OPERATION BASED ON BACKPLANE ETHERNET

(51) International classification :G06F15/16
(31) Priority Document No :13/074998
(32) Priority Date :29/03/2011
(33) Name of priority country :U.S.A.
(86) International Application No :PCT/US2012/030972
Filing Date :28/03/2012
(87) International Publication No :WO 2012/135361
(61) Patent of Addition to Application Number :NA
Filing Date :NA
(62) Divisional to Application Number :NA
Filing Date :NA

(71)**Name of Applicant :**
1)AMAZON TECHNOLOGIES INC.
Address of Applicant :PO Box 8102 Reno Nevada 89507 U.S.A.
(72)**Name of Inventor :**
1)JUDGE Alan M.
2)KELLY Mark N.
3)BRAR Jagwinder Singh
4)MARR Michael David
5)COHN Daniel T.

(57) Abstract :
The deployment and scaling of a network of electronic devices can be improved by utilizing one or more network transpose boxes. Each transpose box can include a number of connectors and a meshing useful for implementing a specific network topology. When connecting devices of different tiers in the network each device need only be connected to at least one of the connectors on the transpose box. One or more of the deployed electronic devices (e.g. switches transpose boxes) in the network can transmit data based on a backplane Ethernet standard such as 10GBASE KR 10GBASE KX4 or 40GBASE KR4.

No. of Pages : 61 No. of Claims : 15

(12) PATENT APPLICATION PUBLICATION
(19) INDIA
(22) Date of filing of Application :09/10/2013
(21) Application No.8792/DELNP/2013 A
(43) Publication Date : 19/12/2014

(54) Title of the invention : METHOD OF SECURING NON NATIVE CODE

(51) International classification :G06F21/00,G06F9/455
(31) Priority Document No :NA
(32) Priority Date :NA
(33) Name of priority country :NA
(86) International Application No :PCT/CA2011/050173
Filing Date :31/03/2011
(87) International Publication No :WO 2012/129639
(61) Patent of Addition to Application Number :NA
Filing Date :NA
(62) Divisional to Application Number :NA
Filing Date :NA

(71)**Name of Applicant :**
1)IRDETO B.V.
Address of Applicant :Taurus Avenue 105 2132 LS Hoofddorp Netherlands
(72)**Name of Inventor :**
1)ADAMS Garney David
2)GU Yuan Xiang
3)RONG Jack Jiequn

(57) Abstract :
A method to secure a non native application. The non native application is processed to obtain an application stub to be triggered within a virtual machine. The processing of the non native application also provide a native code function upon which the application stub depends. The non native function is part of a trusted module that extends security services from the trusted module to the virtual machine. The trusted module is a native code application that creates a trusted zone as a root of trustiness extending to the virtual machine by an execution enabling mechanism between the application tab and the non native function.

No. of Pages : 35 No. of Claims : 28

(12) PATENT APPLICATION PUBLICATION
(19) INDIA
(22) Date of filing of Application :10/10/2013
(21) Application No.8793/DELNP/2013 A
(43) Publication Date : 19/12/2014

(54) Title of the invention : SYSTEM AND METHOD FOR PROCESSING REACTOR POLYMERIZATION EFFLUENT

(51) International classification :C08F210/16
(31) Priority Document No :13/085212
(32) Priority Date :12/04/2011
(33) Name of priority country :U.S.A.
(86) International Application No :PCT/US2012/032360
Filing Date :05/04/2012
(87) International Publication No :WO 2012/141974
(61) Patent of Addition to Application Number :NA
Filing Date :NA
(62) Divisional to Application Number :NA
Filing Date :NA

(71)**Name of Applicant :**
1)CHEVRON PHILLIPS CHEMICAL COMPANY LP
Address of Applicant :10001 Six Pines Drive The Woodlands Texas 77380 U.S.A.
(72)**Name of Inventor :**
1)MILLS Andrew J
2)ROMIG Ralph W
3)LOH JiXian X

(57) Abstract :
A method of treating a polymerization reactor effluent stream comprising recovering the reactor effluent stream from the polymerization reactor flashing the reactor effluent stream to form a flash gas stream separating the flash gas stream into a first top stream a first bottom stream and a side stream wherein the side stream substantially comprises hexane separating the first top stream into a second top stream and a second bottom stream wherein the second bottom stream substantially comprises isobutene and separating the second top stream into a third top stream and a third bottom stream; wherein the third top stream substantially comprises ethylene and wherein the third bottom stream is substantially free of olefins.

No. of Pages : 35 No. of Claims : 20

(12) PATENT APPLICATION PUBLICATION
(19) INDIA
(22) Date of filing of Application :10/10/2013
(21) Application No.8834/DELNP/2013 A
(43) Publication Date : 19/12/2014

(54) Title of the invention : COSMETIC COMPOSITION COMPRISING 4 (3 ETHOXY 4 HYDROXYPHENYL) 2 BUTANONE

(51) International classification :A61K8/37,A61Q5/00
(31) Priority Document No :1152787
(32) Priority Date :01/04/2011
(33) Name of priority country :France
(86) International Application No :PCT/EP2012/055657
Filing Date :29/03/2012
(87) International Publication No :WO 2012/130953
(61) Patent of Addition to Application Number :NA
Filing Date :NA
(62) Divisional to Application Number :NA
Filing Date :NA

(71)**Name of Applicant :**
1)LOREAL
Address of Applicant :14 rue Royale F 75008 Paris France
(72)**Name of Inventor :**
1)CHEVALIER Vronique
2)OUATTARA Sofiane

(57) Abstract :
The invention relates to a composition comprising, in a physiologically acceptable aqueous medium, 4-(3-efhoxy-4-hydroxyphenyl)-2-butanone and a solvent with solubility parameters in the Hansen solubility space such that $4.5 < \delta a < 30$ and $15 < \delta d < 22$. Use for caring for, making up and cleansing keratin materials.

No. of Pages : 15 No. of Claims : 8

(12) PATENT APPLICATION PUBLICATION
(19) INDIA
(22) Date of filing of Application :10/10/2013
(21) Application No.8835/DELNP/2013 A
(43) Publication Date : 19/12/2014

(54) Title of the invention : A METHOD FOR CONTROLLING THE MAIN COMPLEX N GLYCAN STRUCTURES AND THE ACIDIC VARIANTS AND VARIABILITY IN BIOPROCESSES PRODUCING RECOMBINANT PROTEINS

(51) International classification :C07K14/435,C12N5/00,C07K14/43
(31) Priority Document No :11162193.4
(32) Priority Date :13/04/2011
(33) Name of priority country:EPO
(86) International Application No :PCT/EP2012/056672
Filing Date :12/04/2012
(87) International Publication No :WO 2012/140138
(61) Patent of Addition to Application Number :NA
Filing Date :NA
(62) Divisional to Application Number :NA
Filing Date :NA

(71)**Name of Applicant :**
1)LEK PHARMACEUTICALS D.D.
Address of Applicant :Verovskova 57 Ljubljana 1526 Slovenia
(72)**Name of Inventor :**
1)KONCILJA MatjaÅ¾
2)SPUDIC Vatroslav
3)STOJKOVIC SaÅ¡a
4)TISU MatjaÅ¾

(57) Abstract :
The present invention relates to a method of controlling quality and quantity of posttranslational modification of a recombinantly produced polypeptide/protein (glycoprotein) wherein the posttranslational modification affects the glycosylation profile and/or the acidic variants profile as manifested in CEX profiles wherein the polypeptide/protein (glycoprotein) production is in eukaryotic host cells the method comprising the following steps: a) cultivating the eukaryotic cells in a suitable medium under conditions which allow the expression of the polypeptide/protein wherein the content of the dissolved CO (pCO) in the medium is at a first value during the initial growth phase of the eukaryotic cells allowing the eukaryotic cells to grow and b) increasing or decreasing the content of the dissolved CO (pCO) in the medium during the production phase of the eukaryotic cells to a second value.

No. of Pages : 43 No. of Claims : 15

(12) PATENT APPLICATION PUBLICATION
(19) INDIA
(22) Date of filing of Application :11/10/2013
(21) Application No.8850/DELNP/2013 A
(43) Publication Date : 19/12/2014

(54) Title of the invention : METHOD FOR COOLING HOT ROLLED STEEL SHEET

(51) International classification :B21B37/76,B21B45/02
(31) Priority Document No :NA
(32) Priority Date :NA
(33) Name of priority country :NA
(86) International Application No :PCT/JP2012/081670
Filing Date :06/12/2012
(87) International Publication No :WO 2014/087524
(61) Patent of Addition to Application Number :NA
Filing Date :NA
(62) Divisional to Application Number :NA
Filing Date :NA

(71)**Name of Applicant :**
1)NIPPON STEEL & SUMITOMO METAL CORPORATION
Address of Applicant :6 1 Marunouchi 2 chome Chiyoda ku Tokyo 1008071 Japan
(72)**Name of Inventor :**
1)AKASHI Tooru
2)KURIYAMA Shingo
3)ITOH Takeo
4)TASAKI Fuminori
5)NOGUCHI Koji
6)NIKAIDO Hitoshi

(57) Abstract :
This method for cooling a hot rolled steel sheet comprises: a target ratio setting step for setting as the target ratio Xt an upper/lower heat transmission coefficient ratio X1 at which the temperature standard deviation Y of a hot rolled steel sheet takes the minimum value Ymin the target ratio Xt being set on the basis of correlation data between the upper/lower heat transmission coefficient ratio X of the hot rolled steel sheet and said temperature standard deviation Y; and a cooling control step for controlling the upper surface cooling/heat removal amount and/or the lower surface cooling/heat removal amount of the hot rolled steel sheet in a cooling zone such that the upper/lower heat transmission coefficient ratio X of the hot rolled steel sheet in the cooling zone matches the target ratio Xt.

No. of Pages : 101 No. of Claims : 17

(12) PATENT APPLICATION PUBLICATION
(19) INDIA
(22) Date of filing of Application :11/10/2013
(21) Application No.8851/DELNP/2013 A
(43) Publication Date : 19/12/2014

(54) Title of the invention : LUBRICATING AGENT COMPOSITION FOR PLASTIC PROCESSING

(51) International classification :C10M163/00,C10M135/00,C10M137/10
(31) Priority Document No :2011072537
(32) Priority Date :29/03/2011
(33) Name of priority country :Japan
(86) International Application No :PCT/JP2011/070744
Filing Date :12/09/2011
(87) International Publication No :WO 2012/132053
(61) Patent of Addition to Application Number :NA
Filing Date :NA
(62) Divisional to Application Number :NA
Filing Date :NA

(71)**Name of Applicant :**
1)JX Nippon Oil & Energy Corporation
Address of Applicant :6 3 Otemachi 2 chome Chiyoda ku Tokyo 1008162 Japan
(72)**Name of Inventor :**
1)TAKAKI Tomohiro
2)ENDOU Kazuhiko
3)SHIBATA Junichi
4)YOKOTA Hideo

(57) Abstract :
This lubricating oil composition for plastic processing according to the present invention comprises 0.1 to 40 mass% of the zinc dithiophos-phate represented by general formula (1), 30 to 70 mass% of a sulfur-based extreme pressure agent, and 10 to 60 mass% of an organic acid salt based on the total content of the composition. [In formula (1), R 1 and R 2 represent the same or different Ciis straight chain or branched alkyl groups].

No. of Pages : 42 No. of Claims : 1

(12) PATENT APPLICATION PUBLICATION
(19) INDIA
(22) Date of filing of Application :11/10/2013
(21) Application No.8852/DELNP/2013 A
(43) Publication Date : 19/12/2014

(54) Title of the invention : HOT STAMP MOLDED ARTICLE METHOD FOR PRODUCING HOT STAMP MOLDED ARTICLE ENERGY ABSORBING MEMBER AND METHOD FOR PRODUCING ENERGY ABSORBING MEMBER

(51) International classification :C22C38/00,C21D1/18,C21D9/00
(31) Priority Document No :2011108397
(32) Priority Date :13/05/2011
(33) Name of priority country :Japan
(86) International Application No :PCT/JP2012/062209
Filing Date :11/05/2012
(87) International Publication No :WO 2012/157581
(61) Patent of Addition to Application Number :NA
Filing Date :NA
(62) Divisional to Application Number :NA
Filing Date :NA

(71)**Name of Applicant :**
1)NIPPON STEEL & SUMITOMO METAL CORPORATION
Address of Applicant :6 1 Marunouchi 2 chome Chiyoda ku Tokyo 1008071 Japan
(72)**Name of Inventor :**
1)KAWASAKI Kaoru

(57) Abstract :
This hot stamp molaed article has a component composition that contains, in mass%, 0.002-0.1% of C , 0.01-0.5% o f Si, 0.5- 2.5% of M n + Cr, 0 . 1% or less of P , 0.01% or less of S , 0.05% or less of t-Al and 0.005% or less of N , while additionally containing 0.0005-0.004% of B in cases where M n + C r is 1.0% or more, with the balance made up of F e and unavoidable impurities. This hot stamp molded article has a metal structure that is composed of, in terms of the area ratio, 0 % or more but less than 90% of martensite, 10-100% of bainite and less than 0.5% of unavoidable inclusion structures, or a metal structure that is composed of, in terms of the area ratio, 99.5- 100% of bainitic ferrite and less than 0.5% of unavoidable inclusion structures.

No. of Pages : 65 No. of Claims : 14

(12) PATENT APPLICATION PUBLICATION
(19) INDIA
(22) Date of filing of Application :10/10/2013
(21) Application No.8802/DELNP/2013 A
(43) Publication Date : 19/12/2014

(54) Title of the invention : PIPE MATERIAL CORRECTION APPARATUS AND PIPE MATERIAL CORRECTION METHOD

(51) International classification :B21D3/14
(31) Priority Document No :2011086185
(32) Priority Date :08/04/2011
(33) Name of priority country :Japan
(86) International Application No :PCT/JP2012/059528
Filing Date :06/04/2012
(87) International Publication No :WO 2012/137924
(61) Patent of Addition to Application Number :NA
Filing Date :NA
(62) Divisional to Application Number :NA
Filing Date :NA

(71)**Name of Applicant :**
1)NIPPON STEEL & SUMIKIN ENGINEERING CO. LTD.
Address of Applicant :5 1 Osaki 1 chome Shinagawa ku Tokyo 1418604 Japan
(72)**Name of Inventor :**
1)HOSODA Hiroyuki
2)IKEZAKI Toru
3)TORII Tadashi

(57) Abstract :
The apparatus is used for reforming a pipe member by improving the roundness of an axial region which is at least a part of the pipe member in a direction of an axis of the pipe member, the apparatus includes: an anvil ring disposed outside the pipe member so that a circularly-formed inner circumference face of the anvil ring is opposed to an outer circumference face of the axial region; an inner roller disposed inside the pipe member so that an outer circumference face of the inner roller is in contact with an inner circumference face of the axial region; a pressing unit which apples a pressure contact force between the inner circumference face of the anvil ring and the outer circumference face of the pipe member, thereby causing plastic deformation at the axial region by using the inner circumference face of the anvil ring as a reforming face; and a rotation unit which rotates the pipe member with respect to the inner roller around the axis of the pipe member.

No. of Pages : 53 No. of Claims : 19

(12) PATENT APPLICATION PUBLICATION
(19) INDIA
(22) Date of filing of Application :10/10/2013
(21) Application No.8803/DELNP/2013 A
(43) Publication Date : 19/12/2014

(54) Title of the invention : SYSTEMS AND METHODS FOR CALIBRATING DUAL POLARIZATION RADAR SYSTEMS

(51) International classification :G01S13/95
(31) Priority Document No :61/472773
(32) Priority Date :07/04/2011
(33) Name of priority country :U.S.A.
(86) International Application No :PCT/US2012/032569
Filing Date :06/04/2012
(87) International Publication No :WO 2012/139029
(61) Patent of Addition to Application Number :NA
Filing Date :NA
(62) Divisional to Application Number :NA
Filing Date :NA

(71)**Name of Applicant :**
1)BARON SERVICES INC.
Address of Applicant :4930 Research Drive Huntsville AL 35805 U.S.A.
(72)**Name of Inventor :**
1)BALAJI Mrinal Singh
2)ELLIS John R. Jr.
3)CARTWRIGHT R. Darrin
4)WALKER William H.

(57) Abstract :
A dual polarization radar system Is calibrated based on real time data measurements such as measured horizontal and vertical reflectivities ZH and Zv. In this regard the radar system analyzes the reflected power measurements to identify which measurements are associated with reflections from a respective spherical object. Using such measurements the system determines a system differential reflectivity value and combines such value with reflected power measurements for calibration. Since the calibration is based on real time data measurements the calibration process may run simultaneously with the collection of weather data. Thus it is unnecessary to suspend weather monitoring activities in order to perform the calibration and the calibration can be run as often as is desired without interfering with such weather monitoring activities. Further the calibration process is immune to the weather events within range of the radar system.

No. of Pages : 24 No. of Claims : 21

(12) PATENT APPLICATION PUBLICATION
(19) INDIA
(22) Date of filing of Application :10/10/2013
(21) Application No.8805/DELNP/2013 A
(43) Publication Date : 19/12/2014

(54) Title of the invention : APPARATUS FOR CONVEYING AND PLANT FOR SURFACE TREATING ARTICLES

(51) International classification :B62D65/18
(31) Priority Document No :10 2011 103 729.6
(32) Priority Date :31/05/2011
(33) Name of priority country :Germany
(86) International Application No :PCT/EP2012/001907
Filing Date :04/05/2012
(87) International Publication No :WO 2012/163458
(61) Patent of Addition to Application Number :NA
Filing Date :NA
(62) Divisional to Application Number :NA
Filing Date :NA

(71)**Name of Applicant :**
1)EISENMANN AG
Address of Applicant :T¼binger Str. 81 71032 Bblingen Germany
(72)**Name of Inventor :**
1)ROBBIN Jrg

(57) Abstract :
There is specified an apparatus for conveying articles, in which at least one endless drive train (28) forms a load-bearing strand (36) and a return strand (38) and specifies a conveying direction (22). A guide device (24, 26) for the at least one endless drive train (28) comprises a first deflecting element (44) and at least one second deflecting element (46), over which the at least one endless drive train (28) circulates. The at least one endless drive train (28) carries along a plurality of supporting members (54) which are arranged and configured such that they can interact with supporting structures (58) to which at least one article can be fastened. Furthermore, the at least one endless drive train (28) carries along a plurality of coupling members (60a, 60b) which are arranged and configured such that they can interact with standardized holding components of vehicle bodies (12). Furthermore, a surface treatment plant having such a conveying apparatus is specified.

No. of Pages : 45 No. of Claims : 15

(12) PATENT APPLICATION PUBLICATION
(19) INDIA
(22) Date of filing of Application :10/10/2013
(21) Application No.8808/DELNP/2013 A
(43) Publication Date : 19/12/2014

(54) Title of the invention : CYLINDER HEAD OF INTERNAL COMBUSTION ENGINE

(51) International classification :F02F1/36,F02F1/24,F02F1/38
(31) Priority Document No :NA
(32) Priority Date :NA
(33) Name of priority country :NA
(86) International Application No :PCT/JP2011/059024
Filing Date :11/04/2011
(87) International Publication No :WO 2012/140722
(61) Patent of Addition to Application Number :NA
Filing Date :NA
(62) Divisional to Application Number :NA
Filing Date :NA

(71)**Name of Applicant :**
1)TOYOTA JIDOSHA KABUSHIKI KAISHA
Address of Applicant :1 Toyota cho Toyota shi Aichi 4718571 Japan
(72)**Name of Inventor :**
1)IKEDA Akihiro
2)WAKIYA Tsutomu
3)NAKAMURA Hideo

(57) Abstract :
A cylinder head (1) includes a water jacket (4) formed around an ignition plug mounting hole (5). Upper surfaces (12 to 14) of portions of the water jacket (4) between intake and exhaust ports (7 8) and the ignition plug mounting hole (5) are formed lower than upper surfaces (15 to 17) of other portions of the water jacket (4) around the ignition plug mounting hole (5) so as to obtain increased rigidity. In this way deformation of the cylinder head (1) due to cylinder internal pressure is prevented and the concentration of stress around the ignition plug mounting hole (5) due to such deformation is reduced.

No. of Pages : 22 No. of Claims : 2

(12) PATENT APPLICATION PUBLICATION
(19) INDIA
(22) Date of filing of Application :07/10/2013
(21) Application No.8675/DELNP/2013 A
(43) Publication Date : 19/12/2014

(54) Title of the invention : AIRCRAFT ENGINE ANNULAR SHROUD COMPRISING AN OPENING FOR THE INSERTION OF BLADES

(51) International classification :F01D9/04,F01D25/24,F04D29/54
(31) Priority Document No :1153970
(32) Priority Date :09/05/2011
(33) Name of priority country :France
(86) International Application No :PCT/FR2012/050980
Filing Date :03/05/2012
(87) International Publication No :WO 2012/153037
(61) Patent of Addition to Application Number :NA
Filing Date :NA
(62) Divisional to Application Number :NA
Filing Date :NA

(71)**Name of Applicant :**
1)SNECMA
Address of Applicant :2 Boulevard du Gnral Martial Valin F 75015 Paris France
(72)**Name of Inventor :**
1)DEZOUCHE Laurent Gilles

(57) Abstract :
The invention relates to an aircraft engine annular shroud (40 100) characterized in that it comprises: on its internal surface (41 110) a peripheral annular groove (42 101) able to accept a plurality of blade roots (46 104); an insertion opening (43 102) for inserting the blade roots (46 104) into the annular groove (42 101); closure means (60 106 107) for closing off the insertion opening (43 102).

No. of Pages : 24 No. of Claims : 10

(12) PATENT APPLICATION PUBLICATION
(19) INDIA
(22) Date of filing of Application :07/10/2013
(21) Application No.8676/DELNP/2013 A
(43) Publication Date : 19/12/2014

(54) Title of the invention : DIVIDED CONDUIT AND PROCESS FOR FORMING

(51) International classification :H02G1/08,H02G3/04,H02G9/06
(31) Priority Document No :13/088837
(32) Priority Date :18/04/2011
(33) Name of priority country :U.S.A.
(86) International Application No :PCT/US2012/024053
Filing Date :07/02/2012
(87) International Publication No:WO 2012/145055
(61) Patent of Addition to Application Number :NA
Filing Date :NA
(62) Divisional to Application Number :NA
Filing Date :NA

(71)**Name of Applicant :**
1)MILLIKEN & COMPANY
Address of Applicant :920 Milliken Road M 495 Spartanburg South Carolina 29303 U.S.A.
(72)**Name of Inventor :**
1)HEPFINGER John M.
2)ZEILER Bernhard

(57) Abstract :
A divided conduit (10) containing a thermoplastic conduit and at least one strip shaped textile (200). The strip shaped substrate may be a strip shaped textile or a strip shaped film and has a first longitudinal edge (200a) and a second longitudinal edge (200b) which are adhered to or embedded into the inner surface (100a) of the conduit forming at least two flexible longitudinal channels (310 320 330) for enveloping cables (400) or other elongated structures.

No. of Pages : 22 No. of Claims : 16

(12) PATENT APPLICATION PUBLICATION
(19) INDIA
(22) Date of filing of Application :07/10/2013
(21) Application No.8677/DELNP/2013 A
(43) Publication Date : 19/12/2014

(54) Title of the invention : METHOD AND APPARATUS FOR A COMBINATION MOVING BED THERMAL TREATMENT REACTOR AND MOVING BED FILTER

(51) International classification :B01J8/08
(31) Priority Document No :61/472852
(32) Priority Date :07/04/2011
(33) Name of priority country :U.S.A.
(86) International Application No :PCT/US2012/032451
Filing Date :06/04/2012
(87) International Publication No :WO 2013/106025
(61) Patent of Addition to Application Number :NA
Filing Date :NA
(62) Divisional to Application Number :NA
Filing Date :NA

(71)**Name of Applicant :**
1)RENEWABLE OIL INTERNATIONAL LLC
Address of Applicant :3116 Northington Court Florence AL 35630 U.S.A.
(72)**Name of Inventor :**
1)BADGER Phillip C.
2)DUNN Jr Kenneth J.

(57) Abstract :
A moving bed gasification/ thermal treatment reactor includes a geometry which moving bed reactor particles serve as both a moving bed filter and a heat carrier to provide thermal energy for thermal treatment reactions such that the moving bed filter and the heat carrier are one and the same to remove solid particulates or droplets generated by thermal treatment processes or injected into the moving bed filter from other sources.

No. of Pages : 40 No. of Claims : 23

(12) PATENT APPLICATION PUBLICATION
(19) INDIA
(22) Date of filing of Application :07/10/2013
(21) Application No.8678/DELNP/2013 A
(43) Publication Date : 19/12/2014

(54) Title of the invention : FULL SPECTRUM LED ILLUMINATOR

(51) International classification :F21V8/00,A61B1/06,F21K99/00
(31) Priority Document No :61/450360
(32) Priority Date :08/03/2011
(33) Name of priority country :U.S.A.
(86) International Application No :PCT/IB2012/000601
Filing Date :08/03/2012
(87) International Publication No :WO 2012/120380
(61) Patent of Addition to Application Number :NA
Filing Date :NA
(62) Divisional to Application Number :NA
Filing Date :NA

(71)**Name of Applicant :**
1)NOVADAQ TECHNOLOGIES INC.
Address of Applicant :2585 Skymark Avenue Suite 306 Mississauga Ontario L4W 4L5 Canada
(72)**Name of Inventor :**
1)MOORE Allen

(57) Abstract :
An apparatus for providing a light output to an optical guide for illumination of an imaged object including a plurality of solid state light emitting sources each of which are independently powered and independently controlled each light emitting source emitting light at a wavelength which is different from the wavelength emitted by the other light emitting sources. The apparatus also includes a heat sink configured to thermally couple the plurality of solid state light emitting sources and provide conduction of heat generated by the plurality of solid state light emitting sources. The apparatus further includes an optical elements to collect collimate and combine the emissions from the plurality of solid state light emitting sources into a combined beam of light to be optically coupled to the light guide.

No. of Pages : 13 No. of Claims : 5

(12) PATENT APPLICATION PUBLICATION
(19) INDIA
(22) Date of filing of Application :11/10/2013
(21) Application No.8862/DELNP/2013 A
(43) Publication Date : 19/12/2014

(54) Title of the invention : POWER SUPPLY SYSTEM FOR RAILWAY SIGNALLING DEVICES

(51) International classification :H02J3/38,B61L5/18
(31) Priority Document No :TO2011A000308
(32) Priority Date :05/04/2011
(33) Name of priority country :Italy
(86) International Application No :PCT/IB2012/051715
Filing Date :05/04/2012
(87) International Publication No :WO 2012/137178
(61) Patent of Addition to Application Number :NA
Filing Date :NA
(62) Divisional to Application Number :NA
Filing Date :NA

(71)**Name of Applicant :**
1)ANSALDO STS S.p.A.
Address of Applicant :Via Mantovani 3/5 Genova Italy
(72)**Name of Inventor :**
1)TRESANINI Renzo
2)SPIGA Paolo

(57) Abstract :
A power-supply system for railway signalling devices wherein an a.c. voltage source (3) supplies by means of a twowire supply cable (4) a first signalling device (6) of a railway type; a current-controller device (8) is set between the voltage source (3) and an input (4-in) of the supply cable for controlling whether the current absorbed by the first signalling device falls within a safety range. Moreover provided are: a first tuned input filter (10) designed to enable circulation of a harmonic component of the a.c. voltage in the current controller (8); a tuned output filter (12) connected at input to an output terminal (4-out) of the two- wire cable and at output to the first signalling device (6); a rectifier device (14) designed to extract a d.c. component from said a.c. voltage to inject it into the two-wire supply cable downstream of the current controller (8); and a d.c- component-extraction device (16) con nected at input to the output terminal (4-out) of the two-wire cable and at output to a power-supply input of a second signalling device of a railway type (20) for supplying with just the d.c. component the second signalling device without modifying the value of the current that circulates through the current controller and that is absorbed by just the first signalling device (6).

No. of Pages : 14 No. of Claims : 6

(12) PATENT APPLICATION PUBLICATION
(19) INDIA
(22) Date of filing of Application :09/10/2013
(21) Application No.8787/DELNP/2013 A
(43) Publication Date : 19/12/2014

(54) Title of the invention : RATIONAL DESIGN OF COMPONENTS OF THE OLIGO SACCHARYLTRANSFERASE CATALYSED ASPARAGINE LINKED GLYCOSYLATION

(51) International classification :C12Q1/48
(31) Priority Document No :11003648
(32) Priority Date :04/05/2011
(33) Name of priority country :EPO
(86) International Application No :PCT/EP2012/001902
Filing Date :03/05/2012
(87) International Publication No :WO 2012/150034
(61) Patent of Addition to Application Number :NA
Filing Date :NA
(62) Divisional to Application Number :NA
Filing Date :NA

(71)**Name of Applicant :**
1)ETH ZURICH
Address of Applicant :Raemistrasse 101 ETH Transfer CH 8092 Zurich Switzerland
(72)**Name of Inventor :**
1)AEBI Markus
2)LOCHER Kaspar
3)LIZAK Christian

(57) Abstract :
The present invention is directed to methods for identifying or designing (a) a potential oligosaccharide donor (b) a potential oligosaccharyltransferase (OST) (c) a potential consensus sequence motif polypeptide and/or (d) a potential glycosylation inhibitor for use in the oligosaccharyltransferase (OST) catalysed asparagine linked (N linked) glycosylation comprising the steps of generating a three dimensional model of the catalytic domain and/or the polypeptide binding site of the oligosaccharyltransferase (OST) of i and designing or selecting a potential component selected from (a) to (d) which optimizes the stereo chemical complementarity of said three dimensional model(s) and the potential component.

No. of Pages : 141 No. of Claims : 12

(12) PATENT APPLICATION PUBLICATION
(19) INDIA
(22) Date of filing of Application :09/10/2013
(21) Application No.8788/DELNP/2013 A
(43) Publication Date : 19/12/2014

(54) Title of the invention : MULTI DIRECTIONAL ELECTROMAGNETIC YOKE FOR INSPECTION OF BORES

(51) International classification :G01N27/84
(31) Priority Document No :13/109183
(32) Priority Date :17/05/2011
(33) Name of priority country :U.S.A.
(86) International Application No :PCT/US2012/033863
Filing Date :17/04/2012
(87) International Publication No :WO 2012/158294
(61) Patent of Addition to Application Number :NA
Filing Date :NA
(62) Divisional to Application Number :NA
Filing Date :NA

(71)**Name of Applicant :**
1)SIEMENS ENERGY INC.
Address of Applicant :4400 Alafaya Trail Orlando Florida 32826 2399 U.S.A.
(72)**Name of Inventor :**
1)SEGLETES David S.
2)LOMBARDO Erik A.

(57) Abstract :
A non destructive inspection system that has particular application for inspecting a bore in a valve for defects. The system includes an inspection yoke having a ferromagnetic core where a first coil is wound around the core in one direction and a second coil is wound around the core in an orthogonal direction so that orthogonal electromagnetic fields can be generated within the bore. A controller provides a current flow through the coils to generate the electromagnetic fields to detect defects in the bore.

No. of Pages : 12 No. of Claims : 20

(12) PATENT APPLICATION PUBLICATION
(19) INDIA
(22) Date of filing of Application :09/10/2013
(21) Application No.8789/DELNP/2013 A
(43) Publication Date : 19/12/2014

(54) Title of the invention : FILM CONTAINING ALGINATE MEMBRANE LAYER AND METHOD FOR PREPARING SAME

(51) International classification :A61L15/28,C08J5/18
(31) Priority Document No :201110120855.4
(32) Priority Date :11/05/2011
(33) Name of priority country :China
(86) International Application No :PCT/CN2012/000350
Filing Date :20/03/2012
(87) International Publication No :WO 2012/152054
(61) Patent of Addition to Application Number :NA
Filing Date :NA
(62) Divisional to Application Number :NA
Filing Date :NA

(71)**Name of Applicant :**
1)LIN Yu Yueh
Address of Applicant :1F No. 12 Lan 126 Sec. 3 Zhongyang Rd. Tucheng Dist. New Taipei City Taiwan China
2)CHIU Yao Chung
(72)**Name of Inventor :**
1)LIN Yu Yueh
2)CHIU Yao Chung

(57) Abstract :
Disclosed are a film containing an alginate membrane layer and a method for preparing the same. The method is as follows: using a thin layer carrier capable of absorbing liquid, the carrier being made of non-woven fabrics, textures, porous spongy films or plastic films, etc. formed fiOm at least one synthetic or natural fiber; then using at least two coating procedures, which are separate but continuous in succession, to uniformly coat at least one surface of the thin layer carrier with a layer of aqueous alginate solution containing a proper weight percent of sodium alginate or potassium alginate and a layer of salt compound aqueous solution containing a proper weight percent of divalent metal ions such as calcium ions, respectively; rendering the divalent metal ions in the alginates and salt compound cross-linked, so as to form a colloid complex membrane layer, which has a net structure and is water in soluble, on the surface of the thin layer carrier, including on the surface or penetrating more deeply into the inner layer of the sur face; thereby producing a film with a membrane layer of alginates such as sodium alginate and with a film carrier in a continuous, fast way in a large amount. When the thin layer carrier has a coarse surface, the formed alginate membrane layer is combined with the thin layer carrier together; and when the thin layer carrier has a smooth surface, the formed alginate membrane layer is easy to separate from the thin layer carrier, so as to enlarge the application range of the film.

No. of Pages : 33 No. of Claims : 30

(12) PATENT APPLICATION PUBLICATION
(19) INDIA
(22) Date of filing of Application :11/10/2013
(21) Application No.8868/DELNP/2013 A
(43) Publication Date : 19/12/2014

(54) Title of the invention : DIAPHRAGM CONTROL VALVE HAVING A UNIVERSAL DIAPHRAGM MOUNTING LOCATION

(51) International classification	:F16K31/126,F16K41/12,G05D16/06
(31) Priority Document No	:13/052706
(32) Priority Date	:21/03/2011
(33) Name of priority country	:U.S.A.
(86) International Application No	:PCT/US2012/025539
Filing Date	:17/02/2012
(87) International Publication No	:WO 2012/128871
(61) Patent of Addition to Application Number	:NA
Filing Date	:NA
(62) Divisional to Application Number	:NA
Filing Date	:NA

(71)**Name of Applicant :**
1)TESCOM CORPORATION
Address of Applicant :12616 Industrial Blvd. Elk River MN 55330 U.S.A.
(72)**Name of Inventor :**
1)CLIFFORD Jason D.
2)LOGAN Thomas W.

(57) Abstract :
A diaphragm control valve (20) has a universal diaphragm mounting location the diaphragm control valve includes a bonnet (44) a valve body (22) a diaphragm (38) and a clamping washer (92). The bonnet includes a first clamping surface (74) that transitions into a first annular retention surface (78) formed by a skirt (80) and the valve body includes a second clamping surface (82) that transitions into a second annular retention surface (86) formed by an upturned annular lip (88).

No. of Pages : 16 No. of Claims : 22

(12) PATENT APPLICATION PUBLICATION
(19) INDIA
(22) Date of filing of Application :10/10/2013
(21) Application No.8795/DELNP/2013 A
(43) Publication Date : 19/12/2014

(54) Title of the invention : SYSTEMS AND METHODS FOR CASTING METALLIC MATERIALS

(51) International classification :F27B3/04,F27D11/12,B22D1/00
(31) Priority Document No :13/081740
(32) Priority Date :07/04/2011
(33) Name of priority country :U.S.A.
(86) International Application No :PCT/US2012/028846
Filing Date :13/03/2012
(87) International Publication No :WO 2012/138456
(61) Patent of Addition to Application Number :NA
Filing Date :NA
(62) Divisional to Application Number :NA
Filing Date :NA

(71)**Name of Applicant :**
1)ATI PROPERTIES INC.
Address of Applicant :1600 N.E. Old Salem Road Albany Oregon 97321 U.S.A.
(72)**Name of Inventor :**
1)MOXLEY Travis R.
2)DINH Lanh G.
3)SORAN Timothy F.
4)HAAS Edmund J.
5)AUSTIN Douglas P.
6)ARNOLD Matthew J.
7)MARTIN Eric R.

(57) Abstract :
Certain embodiments of a melting and casting apparatus comprising includes a melting hearth; a refining hearth fluidly communicating with the melting hearth; a receiving receptacle fluidly communicating with the refining hearth the receiving receptacle including a first outflow region defining a first molten material pathway and a second outflow region defining a second molten material pathway; and at least one melting power source oriented to direct energy toward the receiving receptacle and regulate a direction of flow of molten material along the first molten material pathway and the second molten material pathway. Methods for casting a metallic material also are disclosed.

No. of Pages : 36 No. of Claims : 39

(12) PATENT APPLICATION PUBLICATION
(19) INDIA
(22) Date of filing of Application :10/10/2013
(21) Application No.8796/DELNP/2013 A
(43) Publication Date : 19/12/2014

(54) Title of the invention : INTERNAL OPTICAL EXTRACTION LAYER FOR OLED DEVICES

(51) International classification :H01L51/50
(31) Priority Document No :61/474522
(32) Priority Date :12/04/2011
(33) Name of priority country :U.S.A.
(86) International Application No :PCT/US2012/030508
Filing Date :26/03/2012
(87) International Publication No :WO 2012/141875
(61) Patent of Addition to Application Number :NA
Filing Date :NA
(62) Divisional to Application Number :NA
Filing Date :NA

(71)**Name of Applicant :**
1)ARKEMA INC.
Address of Applicant :900 First Avenue King of Prussia Pennsylvania 19406 U.S.A.
2)BATTELLE MEMORIAL INSTITUTE
(72)**Name of Inventor :**
1)SILVERMAN Gary S.
2)KOROTKOV Roman Y.
3)SMITH Ryan C.
4)LIU Jun
5)GASPAR Daniel J.
6)PADMAPERUMA Asanga B.
7)WANG Liang
8)SCHWENZER Birgit
9)SWENSEN James S.

(57) Abstract :
A light emitting device which improves the light output of organic light emitting diodes (OLEDs) includes at least one porous metal or metalloid oxide light extraction layer positioned between the substrate and the transparent conducting material layer in the OLED. The index of refraction of the light extraction layer and the light scattering may be tuned by changing the pore size pore density doping the metal oxide adding an insulating conducting or semiconducting component or filling the pores for example. A method for forming the light emitting device includes forming at least one light extraction layer comprising a porous metal or metalloid oxide on a substrate for example using atmospheric pressure chemical vapor deposition (APCVD) and subsequently forming a transparent conducting material on the light extraction layer.

No. of Pages : 45 No. of Claims : 37

(12) PATENT APPLICATION PUBLICATION
(19) INDIA
(22) Date of filing of Application :10/10/2013

(21) Application No.8797/DELNP/2013 A
(43) Publication Date : 19/12/2014

(54) Title of the invention : INHALATOR FOR SUBSTANCES IN POWDER FORM

(51) International classification :A61M15/00
(31) Priority Document No :11300167
(32) Priority Date :21/03/2011
(33) Name of priority country :Sweden
(86) International Application No :PCT/SE2012/000039
Filing Date :21/03/2012
(87) International Publication No :WO 2012/128692
(61) Patent of Addition to Application Number :NA
Filing Date :NA
(62) Divisional to Application Number :NA
Filing Date :NA

(71)**Name of Applicant :**
1)SIMPLIFIED SOLUTIONS SWEDEN AB
Address of Applicant :Nejlikevgen 16 SE 437 31 Lindome Sweden
(72)**Name of Inventor :**
1)…BERG Jan
2)KATAOKA Yutaka
3)HEDEGAARD BROCH
4)FRANSSON Stefar
5)RYTTERHOLM Ulf

(57) Abstract :
The invention refers to an inhalation device provided with a dose ring (2, 38, 65) intended for storage and release of substances in powder form such as a drug, comprising a plurality of substantially circular recesses or powder chambers (1, 37, 66) for storing a respective dose of a preloaded powdery substance, and an air channel (7, 43, 43a, 67) or uncover ing device (68) for dispensing one dose at a time, wherein an advancing mechanism (5,41) is arranged to feed the dose ring (2, 38, 65) in its direction of rotation one powder chamber (1, 37, 66) at a time. The invention is achieved by that the powder chambers (1, 37, 66) are oriented in the surface of the dose ring (2, 38, 65), that at least one seal (27,29,35) is arranged to seal the dose ring (2, 38, 65) so that the powder chambers (1, 37, 66) are sealed from each other for retaining the doses of powder in the respective powder chambers (1, 37, 66), that the dose ring (2, 38, 65) is arranged so that said powder chambers (1, 37, 66) can be uncovered or opened to at least a portion of an air channel (7, 43, 43a, 67) arranged in the position for the powder chamber (1, 37, 66) which is to dispense a dose of powder, and that the seal (27, 29, 35), at the rotation position for dispensing the dose of powder, is or can be opened to the air channel (7, 43, 67) so that the powder chamber (1, 37, 66) and its content is exposed to, and can pass through, the air channel (7, 43, 43a, 67) by means of an air flow.

No. of Pages : 38 No. of Claims : 25

(12) PATENT APPLICATION PUBLICATION
(19) INDIA
(22) Date of filing of Application :10/10/2013
(21) Application No.8798/DELNP/2013 A
(43) Publication Date : 19/12/2014

(54) Title of the invention : FLAME RETARDANT POLYLACTIC ACID COMPOUNDS

(51) International classification :C08L67/04,C08L85/02,C08L69/00
(31) Priority Document No :61/475785
(32) Priority Date :15/04/2011
(33) Name of priority country :U.S.A.
(86) International Application No :PCT/US2012/033296
Filing Date :12/04/2012
(87) International Publication No :WO 2012/142266
(61) Patent of Addition to Application Number :NA
Filing Date :NA
(62) Divisional to Application Number :NA
Filing Date :NA

(71)**Name of Applicant :**
1)POLYONE CORPORATION
Address of Applicant :33587 Walker Road Avon Lake Ohio 44012 U.S.A.
(72)**Name of Inventor :**
1)ZHU Shixiong
2)AVAKIAN Roger W.

(57) Abstract :
A significant disadvantage of the use of polylactic acid (PLA), lack of flame retardance, has been overcome by the use of polyphosphonate-co-carbonate in combination with an impact modifier, a drip suppressant, and optionally, an epoxy function - al styrene-acrylate oligomeric chain extender. The compound achieves a UL 94 rating of V-0 or V-l and a Notched Izod value of more than about 5 ft-lbs/in. The compound also exceeds a threshold of lOOC in heat deflection temperature.

No. of Pages : 37 No. of Claims : 15

(12) PATENT APPLICATION PUBLICATION
(19) INDIA
(22) Date of filing of Application :11/10/2013
(21) Application No.8853/DELNP/2013 A
(43) Publication Date : 19/12/2014

(54) Title of the invention : LIQUID FULL HYDROPROCESSING TO IMPROVE SULFUR REMOVAL USING ONE OR MORE LIQUID RECYCLE STREAMS

(51) International classification :C10G45/22,C10G65/04,C10G65/12
(31) Priority Document No :13/096309
(32) Priority Date :28/04/2011
(33) Name of priority country :U.S.A.
(86) International Application No :PCT/US2012/035817
Filing Date :30/04/2012
(87) International Publication No :WO 2012/149541
(61) Patent of Addition to Application Number :NA
Filing Date :NA
(62) Divisional to Application Number :NA
Filing Date :NA

(71)**Name of Applicant :**
1)E. I. DU PONT DE NEMOURS AND COMPANY
Address of Applicant :1007 Market Street Wilmington Delaware 19898 U.S.A.
(72)**Name of Inventor :**
1)DINDI Hasan
2)MURILLO Luis Eduardo

(57) Abstract :
The present invention provides a process for hydroprocessing hydrocarbons in liquid full reactors with one or more independent liquid recycle streams. The process operates as a liquid full process wherein all of the hydrogen dissolves in the liquid phase and one or more of the recycle streams may actually be zero. Hydrocarbons can be converted in the process to provide liquid products such as clean fuels with multiple desired properties.

No. of Pages : 37 No. of Claims : 21

(12) PATENT APPLICATION PUBLICATION
(19) INDIA
(22) Date of filing of Application :11/10/2013
(21) Application No.8854/DELNP/2013 A
(43) Publication Date : 19/12/2014

(54) Title of the invention : WIND TURBINE ROTOR SHAFT SUPPORT STRUCTURE

(51) International classification :F03D 11/00
(31) Priority Document No :61/450,151
(32) Priority Date :08/03/2011
(33) Name of priority country :U.S.A.
(86) International Application No :PCT/DK2012/050071
Filing Date :08/03/2012
(87) International Publication No :WO 2012/119603
(61) Patent of Addition to Application Number :NA
Filing Date :NA
(62) Divisional to Application Number :8701/DELNP/2013
Filed on :07/10/2013

(71)**Name of Applicant :**
1)VESTAS WIND SYSTEMS A/S
Address of Applicant :HEDEAGER 44 8200 AARHUS N DENMARK
(72)**Name of Inventor :**
1)MARKUSSEN, ERIK

(57) Abstract :
Support structures of a wind turbine including a bearing housing that supports bearings that allow a rotor shaft to rotate about a rotor axis. The bearing housing may be constructed to minimize forces in the bearings in response moments that act on the rotor shaft about axes other than the rotor axis. The support structures of the wind turbine may also include a base to which the bearing housing may be mounted. The base may include features that minimize stress within the wind turbine structure and/or a yaw mechanism of the wind turbine in response to moments that act within the wind turbine about axes other than the rotor axis.

No. of Pages : 27 No. of Claims : 8

(12) PATENT APPLICATION PUBLICATION
(19) INDIA
(22) Date of filing of Application :11/10/2013
(21) Application No.8855/DELNP/2013 A
(43) Publication Date : 19/12/2014

(54) Title of the invention : ROSIN ESTERS FOR NON WOVENS

(51) International classification :C09F1/04
(31) Priority Document No :NA
(32) Priority Date :NA
(33) Name of priority country :NA
(86) International Application No :PCT/US2011/031884
Filing Date :11/04/2011
(87) International Publication No :WO 2012/141675
(61) Patent of Addition to Application Number :NA
Filing Date :NA
(62) Divisional to Application Number :NA
Filing Date :NA

(71)**Name of Applicant :**
1)ARIZONA CHEMICAL COMPANY LLC
Address of Applicant :4600 Touchton Road East Suite 1200 Jacksonville FL 32246 U.S.A.
(72)**Name of Inventor :**
1)ASTROLOGES Gary A.
2)LOCKO George A.
3)DESHPANDE Abhay
4)GAILBREATH Steven C.

(57) Abstract :
Rosin esters having suitable color color stability and/or odor to make them useful for non woven applications to non woven products made from and/or comprising rosin esters and to methods of making and using such rosin esters and products.

No. of Pages : 22 No. of Claims : 23

(12) PATENT APPLICATION PUBLICATION
(19) INDIA
(22) Date of filing of Application :11/10/2013
(21) Application No.8856/DELNP/2013 A
(43) Publication Date : 19/12/2014

(54) Title of the invention : ACETABULAR ROOF REINFORCEMENT PLATE

(51) International classification :A61F2/34,A61F2/30
(31) Priority Document No :61/473983
(32) Priority Date :11/04/2011
(33) Name of priority country :U.S.A.
(86) International Application No :PCT/US2012/025423
Filing Date :16/02/2012
(87) International Publication No :WO 2012/141788
(61) Patent of Addition to Application Number :NA
Filing Date :NA
(62) Divisional to Application Number :NA
Filing Date :NA

(71)**Name of Applicant :**
1)SYNTHES GMBH
Address of Applicant :Eimattstrasse 3 CH 4436 Oberdorf Switzerland
(72)**Name of Inventor :**
1)FIERLBECK Johann
2)NIEDERBERGER Alfred
3)RESCH Herbert

(57) Abstract :
An acetabular implant has (a) a body including a substantially convex exterior surface configured to be received within and engage an acetabulum and a substantially concave interior surface sized and shaped to receive a head portion of a femur; (b) a rim extending about a periphery of the body and including a plurality of first holes each of the first holes being configured to lockingly receive a bone fixation element therethrough in an angularly stable configuration; and (c) a flange extending radially from the rim and including a plurality of second holes. Each of the second holes is configured to receive a bone fixation element therethrough in an angularly stable configuration.

No. of Pages : 14 No. of Claims : 20

(12) PATENT APPLICATION PUBLICATION
(19) INDIA
(22) Date of filing of Application :11/10/2013
(21) Application No.8880/DELNP/2013 A
(43) Publication Date : 19/12/2014

(54) Title of the invention : ADHESIVE COMPOSITION ADHESION METHOD AND PNEUMATIC TIRE

(51) International classification :C09J121/00,B60C5/14,C09J107/00
(31) Priority Document No :2011091186
(32) Priority Date :15/04/2011
(33) Name of priority country :Japan
(86) International Application No :PCT/JP2012/058999
Filing Date :02/04/2012
(87) International Publication No :WO 2012/141035
(61) Patent of Addition to Application Number :NA
Filing Date :NA
(62) Divisional to Application Number :NA
Filing Date :NA

(71)**Name of Applicant :**
1)BRIDGESTONE CORPORATION
Address of Applicant :10 1 Kyobashi 1 chome Chuo ku Tokyo 1048340 Japan
(72)**Name of Inventor :**
1)OGASAWARA Takuya
2)NAKAGAWA Ryuji
3)HAYAKAWA Kotaro
4)CHIASHI Hideyuki

(57) Abstract :
Provided are an adhesive composition a layered body using the adhesive composition and a pneumatic tire. The adhesive composition is characterized by containing as a rubber component at least two types of modified rubber that are modified by polar functional groups and that have different modification ratios. The layered body is formed by using the adhesive composition (C) to bind a resin film layer (A) and a rubber elastic body layer (B). The pneumatic tire has the layered body as an inner liner layer enabling rigid adhesion between the resin film layer and the rubber elastic body layer and preventing the occurrence of cracks in the layered body at low temperatures.

No. of Pages : 33 No. of Claims : 9

(12) PATENT APPLICATION PUBLICATION
(19) INDIA
(22) Date of filing of Application :11/10/2013
(21) Application No.8881/DELNP/2013 A
(43) Publication Date : 19/12/2014

(54) Title of the invention : GERMANOSILICATE SSZ 75

(51) International classification :C01B33/20,C01B39/50,C07D207/02
(31) Priority Document No :13/096558
(32) Priority Date :28/04/2011
(33) Name of priority country :U.S.A.
(86) International Application No :PCT/US2012/030082
Filing Date :22/03/2012
(87) International Publication No :WO 2012/148599
(61) Patent of Addition to Application Number :NA
Filing Date :NA
(62) Divisional to Application Number :NA
Filing Date :NA

(71)**Name of Applicant :**
1)CHEVRON U.S.A. INC.
Address of Applicant :6001 Bollinger Canyon Road San Ramon California 94583 U.S.A.
(72)**Name of Inventor :**
1)DAVIS Tracy M.
2)PETUSHKOV Anton

(57) Abstract :
The present invention relates to new germanosilicate SSZ-75 molecular sieve, and methods for synthesizing germanosilicate SSZ-75.

No. of Pages : 19 No. of Claims : 8

(12) PATENT APPLICATION PUBLICATION
(19) INDIA
(22) Date of filing of Application :11/10/2013
(21) Application No.8872/DELNP/2013 A
(43) Publication Date : 19/12/2014

(54) Title of the invention : ERGONOMIC HAND KNOB HAVING ASYMMETRICAL FLUTES

(51) International classification :F16K31/60,G05G1/08,G05G1/10
(31) Priority Document No :13/052719
(32) Priority Date :21/03/2011
(33) Name of priority country :U.S.A.
(86) International Application No :PCT/US2012/026108
Filing Date :22/02/2012
(87) International Publication No :WO 2012/128880
(61) Patent of Addition to Application Number :NA
Filing Date :NA
(62) Divisional to Application Number :NA
Filing Date :NA

(71)**Name of Applicant :**
1)TESCOM CORPORATION
Address of Applicant :12616 Industrial Blvd. Elk River MN 55330 U.S.A.
(72)**Name of Inventor :**
1)CLIFFORD Jason David

(57) Abstract :
An ergonomic hand knob for a control valve includes a valve body and a plurality of flutes disposed in the valve body each flute including a flute surface. Each flute is asymmetric with respect to an innermost point of the flute surface. A first flute surface has a greater slope than a second flute surface. The first flute surface lays in a direction of tightening from the innermost point and the second flute surface lays in a direction of loosening from the innermost point.

No. of Pages : 12 No. of Claims : 20

(12) PATENT APPLICATION PUBLICATION
(19) INDIA
(22) Date of filing of Application :11/10/2013
(21) Application No.8873/DELNP/2013 A
(43) Publication Date : 19/12/2014

(54) Title of the invention : VALVE APPARATUS TO PREVENT CONTAMINATION OF FLUID IN A FLUID REGULATOR

(51) International classification :F16K31/126,F16K41/12,G05D16/06
(31) Priority Document No :13/052470
(32) Priority Date :21/03/2011
(33) Name of priority country :U.S.A.
(86) International Application No :PCT/US2012/025538
Filing Date :17/02/2012
(87) International Publication No :WO 2012/128870
(61) Patent of Addition to Application Number :NA
Filing Date :NA
(62) Divisional to Application Number :NA
Filing Date :NA

(71)**Name of Applicant :**
1)TESCOM CORPORATION
Address of Applicant :12616 Industrial Blvd. Elk River MN 55330 U.S.A.
(72)**Name of Inventor :**
1)CLIFFORD Jason D.
2)CRAMER Mark Wharton

(57) Abstract :
Valve apparatus to prevent contamination of a fluid in a fluid regulator (300) are described. An example valve apparatus described herein includes a housing (402) disposed within a fluid flow passageway of the fluid regulat or to define a low-pressure side (405) of the fluid flow pas sageway and a high-pressure side (403) of the fluid flow passageway. The housing has a bore (406) that at least par tially defines the fluid flow passageway when coupled to the fluid regulator. The housing has a movable valve assembly (408) disposed within the bore via a non- threaded connec tion in fluid communication with the low-pressure side of the fluid flow passageway and external threads (404) to threadably couple the housing to an opening (342) of the fluid regulator. A seal system (428,442) prevents impurities from flowing between the high-pressure side of the fluid flow passageway and the low-pressure side of the fluid flow passageway.

No. of Pages : 24 No. of Claims : 22

(12) PATENT APPLICATION PUBLICATION
(19) INDIA
(22) Date of filing of Application :11/10/2013
(21) Application No.8874/DELNP/2013 A
(43) Publication Date : 19/12/2014

(54) Title of the invention : NOVEL PYRIMIDINE DERIVATIVES

(51) International classification :C07D403/14,A61K31/506,A61P35/00
(31) Priority Document No :11159589.8
(32) Priority Date :24/03/2011
(33) Name of priority country :EPO
(86) International Application No :PCT/EP2012/055216
Filing Date :23/03/2012
(87) International Publication No :WO 2012/127032
(61) Patent of Addition to Application Number :NA
Filing Date :NA
(62) Divisional to Application Number :NA
Filing Date :NA

(71)**Name of Applicant :**
1)CHEMILIA AB
Address of Applicant :Box 4102 S 141 04 Huddinge Sweden
(72)**Name of Inventor :**
1)H–GBERG Marita
2)DAHLSTEDT Emma
3)SMITT Olof
4)JOHANSSON Tommy

(57) Abstract :
The invention provides novel pyrimidine derivatives of formula (I), methods of preparing such compounds, pharma - ceutical compositions containing such compounds, and methods for using such compounds in treatment of diseases including cancer; wherein R-R 11, Z, and Y are as defined in the specification.

No. of Pages : 98 No. of Claims : 50

(12) PATENT APPLICATION PUBLICATION
(19) INDIA
(22) Date of filing of Application :11/10/2013
(21) Application No.8875/DELNP/2013 A
(43) Publication Date : 19/12/2014

(54) Title of the invention : IMPROVED HEAT STORAGE APPARATUS

(51) International classification :F28D20/00,H02J15/00
(31) Priority Document No :1104867.5
(32) Priority Date :23/03/2011
(33) Name of priority country :U.K.
(86) International Application No :PCT/GB2011/051595
Filing Date :24/08/2011
(87) International Publication No :WO 2012/127178
(61) Patent of Addition to Application Number :NA
Filing Date :NA
(62) Divisional to Application Number :NA
Filing Date :NA

(71)**Name of Applicant :**
1)ISENTROPIC LTD
Address of Applicant :7 Brunel Way Segensworth East Fareham Hants PO15 5TX U.K.
(72)**Name of Inventor :**
1)HOWES Jonathan Sebastian
2)MACNAGHTEN James
3)HUNT Rowland Geoffrey

(57) Abstract :
Heat storage apparatus comprising at least one thermal store (300) comprising a chamber (301) having a gas inlet (306) a gas outlet (307) and a gas permeable thermal storage media (303) disposed therebetween the apparatus being configured such that during operation the flow path of agas flowing through the chamber (301) from inlet (306) to outlet (307) for transfer of thermal energy to or from the storage media (303) can be selectively altered in response to the progress of the thermal transfer thereby enabling the flow path to bypass inactive upstream or downstream regions of the storage media where thermal transfer is complete or minimal so as to minimise the pressure drop across the storage media. A baffle system (305) in a main flow passageway (312) may be used to control the gas flow path.

No. of Pages : 43 No. of Claims : 26

(12) PATENT APPLICATION PUBLICATION
(19) INDIA
(22) Date of filing of Application :11/10/2013
(21) Application No.8876/DELNP/2013 A
(43) Publication Date : 19/12/2014

(54) Title of the invention : VESSEL COMPRISING A CRANE

(51) International classification :B63B27/10,B66C23/82
(31) Priority Document No :2006605
(32) Priority Date :14/04/2011
(33) Name of priority country :Netherlands
(86) International Application No :PCT/NL2012/050242
Filing Date :13/04/2012
(87) International Publication No :WO 2012/141584
(61) Patent of Addition to Application Number :NA
Filing Date :NA
(62) Divisional to Application Number :NA
Filing Date :NA

(71)**Name of Applicant :**
1)IHC HOLLAND IE B.V.
Address of Applicant :Molendijk 94 NL 3361 EP Sliedrecht Netherlands
(72)**Name of Inventor :**
1)KWELDAM Dennis
2)BIJVOET Erwin Cornelis Johannes

(57) Abstract :
The invention relates a vessel (4) comprising a crane (1) being connected to a deck (5) of the vessel. The crane (1) comprises a frame (10) which is rotatable about a horizontal hinge axis (H) and a rotation mechanism (20) connected to the frame (10) at a position away from the horizontal hinge axis (H) arranged to rotate the frame (10) about the horizontal hinge axis (H) from an upper position to a lower position and vice versa. The crane (1) further comprises a swivel member (30) which is with a first end (31) rotatable connected to the deck (5) and which is with a second end (32) rotatable connected to the rotation mechanism (20). The swivel member (30) is rotatable between an inward position associated with the upper position of the frame (10) to an outward position associated with the lower position of the frame (10).

No. of Pages : 16 No. of Claims : 8

(12) PATENT APPLICATION PUBLICATION
(19) INDIA
(22) Date of filing of Application :07/10/2013
(21) Application No.8695/DELNP/2013 A
(43) Publication Date : 19/12/2014

(54) Title of the invention : UNSATURATED POLYESTER RESIN COMPOSITION

(51) International classification :C08F283/01,C08K5/01,C08K5/098
(31) Priority Document No :11160438.5
(32) Priority Date :30/03/2011
(33) Name of priority country :EPO
(86) International Application No :PCT/EP2012/055670
Filing Date :29/03/2012
(87) International Publication No :WO 2012/130963
(61) Patent of Addition to Application Number :NA
Filing Date :NA
(62) Divisional to Application Number :NA
Filing Date :NA

(71)**Name of Applicant :**
1)DSM IP ASSETS B.V.
Address of Applicant :Het Overloon 1 NL 6411 TE Heerlen Netherlands
(72)**Name of Inventor :**
1)HILKER Iris
2)JANSEN Johan Franz Gradus Antonius
3)ARFSTEN Nanning Joerg

(57) Abstract :
The present invention relates to unsaturated polyester resin compositions comprising (a) an unsaturated polyester (b) a vinyl group containing organic compound as reactive diluent and (c) a tertiary aromatic amine wherein the resin composition further comprises (d) a compound according to formula (1) as reactive diluent whereby n= 0-3; R i and R 2 each individually represent H, C1-C20 alkyl, C3-C20 cycloalkyl, C6-C20 aryl, C7-C20 alkylaryl or C7-C20 arylalkyl; X = O S or NR 3 whereby R 3= H, G-C20 alkyl, C3-C20 cycloalkyl, C6-C20 aryl, C7-C20 alkylaryl, C7-C20 arylalkyl, part of a polymer chain or attached to a polymer chain and the resin composition comprises as vinyl group containing organic compound (b) styrene a styrene derivative a vinyl ether a vinyl amine or vinyl amide or a mixture of at least two of these compounds.

No. of Pages : 18 No. of Claims : 16

(12) PATENT APPLICATION PUBLICATION
(19) INDIA
(22) Date of filing of Application :07/10/2013
(21) Application No.8696/DELNP/2013 A
(43) Publication Date : 19/12/2014

(54) Title of the invention : UNSATURATED POLYESTER RESIN COMPOSITION

(51) International classification :C08F283/01,C08K5/01,C08K5/098
(31) Priority Document No :11160440.1
(32) Priority Date :30/03/2011
(33) Name of priority country :EPO
(86) International Application No :PCT/EP2012/055674
Filing Date :29/03/2012
(87) International Publication No :WO 2012/130967
(61) Patent of Addition to Application Number :NA
Filing Date :NA
(62) Divisional to Application Number :NA
Filing Date :NA

(71)**Name of Applicant :**
1)DSM IP ASSETS B.V.
Address of Applicant :Het Overloon 1 NL 6411 TE Heerlen Netherlands
(72)**Name of Inventor :**
1)HILKER Iris
2)JANSEN Johan Franz Gradus Antonius
3)ARFSTEN Nanning Joerg

(57) Abstract :
The present invention relates to unsaturated polyester resin compositions comprising (a) an unsaturated polyester (b) a vinyl group containing organic compound as reactive diluent and (c) a tertiary aromatic amine wherein the resin composition further comprises (d) a compound according to formula (1) as reactive diluent whereby n= 0-3; R i and R 2 each individually represent H, C1-C20 alkyl, C3-C20 cycloalkyl, C6-C20 aryl, C7-C20 alkylaryl or C7-C20 arylalkyl; X = O S or NR 3 whereby R 3= H, G-C20 alkyl, C3-C20 cycloalkyl, C6-C20 aryl, C7-C20 alkylaryl, C7-C20 arylalkyl, part of a polymer chain or attached to a polymer chain and the resin composition comprises as vinyl group containing organic compound (b) styrene a styrene derivative a vinyl ether a vinyl amine or vinyl amide or a mixture of at least two of these compounds.

No. of Pages : 19 No. of Claims : 16

(12) PATENT APPLICATION PUBLICATION
(19) INDIA
(22) Date of filing of Application :07/10/2013
(21) Application No.8697/DELNP/2013 A
(43) Publication Date : 19/12/2014

(54) Title of the invention : PROCESS FOR RADICALLY CURING A COMPOSITION

(51) International classification :C08F220/00,C08F224/00,C08L37/00
(31) Priority Document No :11160432.8
(32) Priority Date :30/03/2011
(33) Name of priority country :EPO
(86) International Application No :PCT/EP2012/055666
Filing Date :29/03/2012
(87) International Publication No :WO 2012/130959
(61) Patent of Addition to Application Number :NA
Filing Date :NA
(62) Divisional to Application Number :NA
Filing Date :NA

(71)**Name of Applicant :**
1)DSM IP Assets B.V.
Address of Applicant :Het Overloon 1 NL 6411 TE Heerlen Netherlands
(72)**Name of Inventor :**
1)HILKER Iris
2)JANSEN Johan Franz Gradus Antonius
3)ARFSTEN Nanning Joerg

(57) Abstract :
The present invention relates to a process for radically curing a composition comprising a methacrylate containing compound (a1) and a monomer copolymerizable with said methacrylate containing compound in the presence of a 5 transition metal compound (c) and a peroxide wherein the composition comprises a compound (b) according to formula (1) as monomer copolymerizable with said methacrylate containing compound whereby n= 0-3; R i and R 2 each individually represent H, C1-C20 alkyl, C3-C20 cycloalkyl, C6-C20 aryl, C7-C20 alkylaryl or C7-C20 arylalkyl; X = O S or NR 3 whereby R 3= H, G-C20 alkyl, C3-C20 cycloalkyl, C6-C20 aryl, C7-C20 alkylaryl, C7-C20 arylalkyl, part of a polymer chain or attached to a polymer chain and the composition comprises at least one transition metal compound (c) selected from the group consisting of Co Cu Mn and Fe compounds and the curing is effected in the presence of a peroxide selected from the group consisting of hydroperoxides, perketals, peresters, percarbonates and mixtures thereof.

No. of Pages : 19 No. of Claims : 18

(12) PATENT APPLICATION PUBLICATION
(19) INDIA
(22) Date of filing of Application :07/10/2013
(21) Application No.8698/DELNP/2013 A
(43) Publication Date : 19/12/2014

(54) Title of the invention : PROCESS FOR RADICALLY CURING A COMPOSITION

(51) International classification :C08F224/00,C08F220/00,C08L37/00
(31) Priority Document No :11160435.1
(32) Priority Date :30/03/2011
(33) Name of priority country :EPO
(86) International Application No :PCT/EP2012/055667
Filing Date :29/03/2012
(87) International Publication No :WO 2012/130960
(61) Patent of Addition to Application Number :NA
Filing Date :NA
(62) Divisional to Application Number :NA
Filing Date :NA

(71)**Name of Applicant :**
1)DSM IP Assets B.V.
Address of Applicant :Het Overloon 1 NL 6411 TE Heerlen Netherlands
(72)**Name of Inventor :**
1)HILKER Iris
2)JANSEN Johan Franz Gradus Antonius
3)ARFSTEN Nanning Joerg

(57) Abstract :
The present invention relates to a process for radically curing a composition comprising a methacrylate containing compound (a1) and a monomer copolymerizable with said methacrylate containing compound in the presence of tertiary aromatic amine (c) and a peranhydride (d) wherein the composition comprises a compound (b) according to formula (1) as monomer copolymerizable with said methacrylate containing compound whereby n= 0-3; R i and R 2 each individually represent H, C1-C20 alkyl, C3-C20 cycloalkyl, C6-C20 aryl, C7-C20 alkylaryl or C7-C20 arylalkyl; X = O S or NR 3 whereby R 3= H, G-C20 alkyl, C3-C20 cycloalkyl, C6-C20 aryl, C7-C20 alkylaryl, C7-C20 arylalkyl, part of a polymer chain or attached to a polymer chain.

No. of Pages : 19 No. of Claims : 17

(12) PATENT APPLICATION PUBLICATION
(19) INDIA
(22) Date of filing of Application :11/10/2013
(21) Application No.8869/DELNP/2013 A
(43) Publication Date : 19/12/2014

(54) Title of the invention : INTERCHANGEABLE VALVE APPARATUS FOR USE WITH FLUID REGULATORS

(51) International classification :G05D16/06
(31) Priority Document No :13/052476
(32) Priority Date :21/03/2011
(33) Name of priority country :U.S.A.
(86) International Application No :PCT/US2012/028981
Filing Date :14/03/2012
(87) International Publication No :WO 2012/129015
(61) Patent of Addition to Application Number :NA
Filing Date :NA
(62) Divisional to Application Number :NA
Filing Date :NA

(71)**Name of Applicant :**
1)TESCOM CORPORATION
Address of Applicant :12616 Industrial Blvd. Elk River MN 55330 U.S.A.
(72)**Name of Inventor :**
1)CLIFFORD Jason David
2)LOGAN Thomas William

(57) Abstract :
Interchangeable valve apparatus for use with fluid regulators are described herein. An example valve apparatus described herein includes a first retainer is removably coupled to a fluid flow passageway of a fluid regulator between an inlet and an outlet. The first retainer comprises a first housing having a first bore to receive a flow control assembly and the first retainer has a first opening coaxially aligned with the first bore to define a first orifice of the fluid flow passageway when the retainer is coupled to the fluid regulator. The fluids regulator also includes a second retainer different than and interchangeable with the first retainer where the second retainer comprises a second housing having a second bore to receive the flow control assembly. The second retainer has a second opening coaxially aligned with the second bore to define a second orifice of the fluid flow passageway when the second retainer is coupled to the fluid regulator. The first retainer provides a first fluid flow characteristic and the second retainer provides a second fluid flow characteristic different than the first fluid flow characteristic.

No. of Pages : 21 No. of Claims : 20

(12) PATENT APPLICATION PUBLICATION
(19) INDIA
(22) Date of filing of Application :11/10/2013
(21) Application No.8870/DELNP/2013 A
(43) Publication Date : 19/12/2014

(54) Title of the invention : BREATHING APPARATUS

(51) International classification :A61M16/00
(31) Priority Document No :61/467760
(32) Priority Date :25/03/2011
(33) Name of priority country :U.S.A.
(86) International Application No :PCT/US2012/029817
Filing Date :20/03/2012
(87) International Publication No :WO 2012/134887
(61) Patent of Addition to Application Number :NA
Filing Date :NA
(62) Divisional to Application Number :NA
Filing Date :NA

(71)**Name of Applicant :**
1)INSLEEP TECHNOLOGIES LLC
Address of Applicant :3265 Meridian Parkway Suite 114 Weston FL 33331 U.S.A.
(72)**Name of Inventor :**
1)GUSKY Michael H.
2)LAUK Michael
3)OSSEO ASARE Kwame L.

(57) Abstract :
An apparatus including a blower configured to provide a supply of breathing gas, and a delivery tube con figured to deliver the supply of breathing gas to a user breathing interface. The delivery tube has an inside diameter of about 15 mm or less. The apparatus also including a con trol system configured to provide a control signal to the blower for controlling a pressure of the supply of breathing gas to between about 1 cm H20 to about 6 cm H20 at the user breathing interface. The control signal is based upon, at least in part, one of a pressure and a flow rate of the supply of breathing gas at the user breathing interface.

No. of Pages : 41 No. of Claims : 19

(12) PATENT APPLICATION PUBLICATION
(19) INDIA
(22) Date of filing of Application :11/10/2013
(21) Application No.8871/DELNP/2013 A
(43) Publication Date : 19/12/2014

(54) Title of the invention : IMPROVED THERMAL STORAGE SYSTEM

(51) International classification :F28D20/00
(31) Priority Document No :1104867.5
(32) Priority Date :23/03/2011
(33) Name of priority country :U.K.
(86) International Application No :PCT/GB2011/051596
Filing Date :24/08/2011
(87) International Publication No :WO 2012/127179
(61) Patent of Addition to Application Number :NA
Filing Date :NA
(62) Divisional to Application Number :NA
Filing Date :NA

(71)**Name of Applicant :**
1)ISENTROPIC LTD
Address of Applicant :7 Brunel Way Segensworth East Fareham Hants PO15 5TX U.K.
(72)**Name of Inventor :**
1)HOWES Jonathan Sebastian
2)MACNAGHTEN James
3)HUNT Rowland Geoffrey

(57) Abstract :
A heat storage system (400) comprising a system gas inlet (460) a system gas outlet (470) and at least two thermal stores (401 402) connected together in series therebetween wherein each store comprises a chamber having a gas inlet (461 462) a gas outlet (471 472) and a gas permeable thermal storage media 431disposed therebetween the system further comprising flow controllers (451 452 453 454 457) operatively connected to bypass passageways and so configured that during operation the flow path of a gas flowing through the system (400) for transfer of thermal energy to or from the storage media (431) can be selectively altered in respect of which stores (401 402) in the series are used in response to the progress of the thermal transfer.

No. of Pages : 24 No. of Claims : 16

(12) PATENT APPLICATION PUBLICATION
(19) INDIA
(22) Date of filing of Application :11/10/2013
(21) Application No.8887/DELNP/2013 A
(43) Publication Date : 19/12/2014

(54) Title of the invention : FIXING RING AND A FLUID PRODUCT DISPENSER USING SUCH A RING

(51) International classification :B05B11/00,B65D83/38,B65D83/20
(31) Priority Document No :1154470
(32) Priority Date :23/05/2011
(33) Name of priority country :France
(86) International Application No :PCT/FR2012/051126
Filing Date :21/05/2012
(87) International Publication No :WO 2012/160302
(61) Patent of Addition to Application Number :NA
Filing Date :NA
(62) Divisional to Application Number :NA
Filing Date :NA

(71)**Name of Applicant :**
1)APTAR FRANCE SAS
Address of Applicant :Lieudit le Prieur F 27110 Le Neubourg France
(72)**Name of Inventor :**
1)BRAHIM Xavier
2)LECOMTE Olivier

(57) Abstract :
Fixing ring (4) for fixing a dispensing member (2) such as a pump or a valve, to a neck (11) of a tank (1), the ring (4) comprising receiving means (41) capable of receiving the dispensing member (2) and a substantially cylindrical anchoring skirt (42) intended to fit around the neck (11) of the tank (1), the skirt (42) defining an inner wall (42i) defining a first section of upper inner wall (43) intended to engage with the neck (11) and a second section of lower inner wall (44) intended to extend out of contact with the neck (11), characterized in that the anchoring skirt (42) comprises an orientation tab (45) which interrupts the second section of lower inner wall (44) and juts out radially towards the inside with respect to this second section (44).

No. of Pages : 17 No. of Claims : 4

(12) PATENT APPLICATION PUBLICATION
(19) INDIA
(22) Date of filing of Application :11/10/2013
(21) Application No.8877/DELNP/2013 A
(43) Publication Date : 19/12/2014

(54) Title of the invention : NUTRITIONAL COMPOSITIONS HAVING ALPHA HICA AND CITRULLINE

(51) International classification :A23L1/30,A61K31/19,A23L1/305
(31) Priority Document No :61/476345
(32) Priority Date :18/04/2011
(33) Name of priority country :U.S.A.
(86) International Application No :PCT/EP2012/057093
Filing Date :18/04/2012
(87) International Publication No :WO 2012/143403
(61) Patent of Addition to Application Number :NA
Filing Date :NA
(62) Divisional to Application Number :NA
Filing Date :NA

(71)**Name of Applicant :**
1)NESTEC S.A.
Address of Applicant :Av. Nestl 55 CH 1800 Vevey Switzerland
(72)**Name of Inventor :**
1)GREENBERG Norman Alan
2)BREUILLE Denis
3)ROUGHEAD Zamzam Kabiry (Fariba)
4)BOLSTER Doug
5)MAGER Jennifer

(57) Abstract :
Nutritional compositions for maximizing muscle protein synthesis while minimizing the catabolism of muscle proteins and methods of using same are provided. In this manner the nutritional compositions may provide for retention of lean body mass which helps to avoid loss of independence and functionality as well as to improve quality of life especially in the elderly at risk of sarcopenia and frailty. The nutritional compositions include a hydroxyisocaproic acid and citrulline. The composition may include other functional ingredients such as but not limited to whey protein incuding whey protein micelles prebiotic fibers a ketoglutarate eicosapentaenoic acid L carnitine nucleotides and amino acids. Methods of administering such nutritional products to individuals in need of same are also provided.

No. of Pages : 37 No. of Claims : 50

(12) PATENT APPLICATION PUBLICATION
(19) INDIA
(22) Date of filing of Application :11/10/2013
(21) Application No.8878/DELNP/2013 A
(43) Publication Date : 19/12/2014

(54) Title of the invention : NUTRITIONAL COMPOSITIONS FOR ENHANCING PERFORMANCE AND METHODS FOR MAKING AND USING SAME

(51) International classification :A23L1/09,A23L1/29,A23L1/30
(31) Priority Document No :61/478047
(32) Priority Date :21/04/2011
(33) Name of priority country :U.S.A.
(86) International Application No :PCT/US2012/033991
Filing Date :18/04/2012
(87) International Publication No :WO 2012/145346
(61) Patent of Addition to Application Number :NA
Filing Date :NA
(62) Divisional to Application Number :NA
Filing Date :NA

(71)**Name of Applicant :**
1)NESTEC S.A.
Address of Applicant :Avenue Nestle 55 CH 1800 Vevey Switzerland
(72)**Name of Inventor :**
1)ROY Marie Georgina
2)GEOFFROY Gilbert
3)HAILE Tesfalidet

(57) Abstract :
Nutritional compositions containing carbohydrates for maximizing performance and methods for making and using same are provided. The nutritional compositions provide a refreshing and easy to consume composition that provides adequate amounts and types of nutrition to provide the body with proper fuel for performance. The performance may be, for example, athletic, academic, or other performances requiring physical stamina and/or mental alertness. In an embodiment, the nutritional compositions are powder formulations for reconstitution by the consumer prior to consumption. Methods for making and administering such nutritional compositions to individuals in need of same are also provided.

No. of Pages : 31 No. of Claims : 23

(12) PATENT APPLICATION PUBLICATION
(19) INDIA
(22) Date of filing of Application :11/10/2013
(21) Application No.8879/DELNP/2013 A
(43) Publication Date : 19/12/2014

(54) Title of the invention : NUTRITIONAL COMPOSITIONS HAVING SOLID PARTICLES AND METHODS FOR MAKING AND USING SAME

(51) International classification :A23L1/29,A23L1/00,A23L1/164
(31) Priority Document No :61/478050
(32) Priority Date :21/04/2011
(33) Name of priority country :U.S.A.
(86) International Application No :PCT/EP2012/057207
Filing Date :19/04/2012
(87) International Publication No :WO 2012/143469
(61) Patent of Addition to Application Number :NA
Filing Date :NA
(62) Divisional to Application Number :NA
Filing Date :NA

(71)**Name of Applicant :**
1)NESTEC S.A.
Address of Applicant :Avenue Nestl 55 CH 1800 Vevey Switzerland
(72)**Name of Inventor :**
1)MATEUS Marie Louise
2)THONNEY Yves Michel

(57) Abstract :
A packaged food product comprising a package housing and a nutritional composition having reduced stickiness on its surface, comprising a plurality of solid particles on at least one surface of the nutritional composition and a carbohydrate, wherein the solid particles have a diameter between about 1 mm and about 10 mm, and wherein the at least one surface of the nutritional composition is an external surface.

No. of Pages : 29 No. of Claims : 21

(12) PATENT APPLICATION PUBLICATION
(19) INDIA
(22) Date of filing of Application :11/10/2013
(21) Application No.8893/DELNP/2013 A
(43) Publication Date : 19/12/2014

(54) Title of the invention : APPARATUS FOR MAINTAINING A HARVESTED ORGAN VIABLE AND TRANSPORTABLE

(51) International classification :A61J1/00,A01N1/02
(31) Priority Document No :11002136
(32) Priority Date :23/03/2011
(33) Name of priority country :Sweden
(86) International Application No :PCT/SE2012/000045
Filing Date :23/03/2012
(87) International Publication No :WO 2012/128696
(61) Patent of Addition to Application Number :NA
Filing Date :NA
(62) Divisional to Application Number :NA
Filing Date :NA

(71)**Name of Applicant :**
1)VIVOLINE MEDICAL AB
Address of Applicant :Scheelevgen 17 S 223 70 Lund Sweden
(72)**Name of Inventor :**
1)STEEN Stig
2)PASKEVICIUS Audrius
3)KING Benjamin

(57) Abstract :
An apparatus for enclosing an organ after harvesting and before implantation comprising: a vessel (2) enclosing a fluid (3); a connection tube (31) for connecting a fluid flow hose (35) to the organ for passing a fluid to the organ by means of a pump (41). A degassing hose (46) extending from the connection tube (31) from a position adjacent the connection of the tube (31) with an inlet part of the organ and to said vessel (2). A pinch valve (48) is arranged in the degassing hose. During a degassing phase the pinch valve (48) is opened to allow fluid flow from the pump via the fluid flow hose to the connection tube (31) and via the degassing hose (46) to the vessel (2) for expelling air entrapped in the fluid flow system. A balloon (49) is arranged to prevent fluid flow via the connection tube (31) to the organ during the degassing phase. A sterility arrangement (70) closes the vessel at the top thereof and may be replaced by a second third etc sterility arrangement (77) without compromising the sterility.

No. of Pages : 25 No. of Claims : 8

(12) PATENT APPLICATION PUBLICATION
(19) INDIA
(22) Date of filing of Application :10/10/2013
(21) Application No.8817/DELNP/2013 A
(43) Publication Date : 19/12/2014

(54) Title of the invention : METHODS OF MECHANICALLY DEFORMING MATERIALS

(51) International classification :A61F13/15,D04H1/425,D04H1/26
(31) Priority Document No :13/094295
(32) Priority Date :26/04/2011
(33) Name of priority country :U.S.A.
(86) International Application No :PCT/US2012/034965
Filing Date :25/04/2012
(87) International Publication No :WO 2012/149000
(61) Patent of Addition to Application Number :NA
Filing Date :NA
(62) Divisional to Application Number :NA
Filing Date :NA

(71)**Name of Applicant :**
1)THE PROCTER & GAMBLE COMPANY
Address of Applicant :One Procter & Gamble Plaza Cincinnati Ohio 45202 U.S.A.
(72)**Name of Inventor :**
1)CURRO John Joseph
2)ORR Jill Marlene
3)STRUBE John Brian
4)KOCHER Leroy Joseph

(57) Abstract :
Methods of mechanically deforming a material are disclosed. The methods of mechanically deforming a material involve using forming members that are moving at different surface speeds relative to each other to form deformed web materials.

No. of Pages : 36 No. of Claims : 12

(12) PATENT APPLICATION PUBLICATION
(19) INDIA
(22) Date of filing of Application :10/10/2013
(21) Application No.8818/DELNP/2013 A
(43) Publication Date : 19/12/2014

(54) Title of the invention : CARBON SUPPORTED COBALT AND MOLYBDENUM CATALYST

(51) International classification :B01J21/18,B01J23/882,B01J23/887
(31) Priority Document No :11003260.4
(32) Priority Date :19/04/2011
(33) Name of priority country:EPO
(86) International Application No :PCT/EP2012/001699
Filing Date :19/04/2012
(87) International Publication No :WO 2012/143131
(61) Patent of Addition to Application Number :NA
Filing Date :NA
(62) Divisional to Application Number :NA
Filing Date :NA

(71)**Name of Applicant :**
1)SAUDI BASIC INDUSTRIES CORPORATION
Address of Applicant :P.O. Box 5101 11422 Riyadh Saudi Arabia
(72)**Name of Inventor :**
1)KARIM Khalid
2)HUTCHINGS Graham
3)IQBAL Sarwat

(57) Abstract :
The present invention relates to a catalyst composition comprising cobalt molybdenum and optionally one or more elements selected from the group consisting of alkali metals and alkaline earth metals on a carbon support wherein said cobalt and molybdenum are in their metallic form. It was surprisingly found that the selectivity for alcohols can be increased by using the carbon supported cobalt molybdenum catalyst as described herein in a process for producing alcohols from a feed stream comprising hydrogen and carbon monoxide. Furthermore it was found that the catalyst of the present invention has a decreased selectivity for CO and can be operated at relatively low temperature when compared to conventional catalysts. Moreover a method for preparing the carbon supported cobalt molybdenum catalyst composition and a process for producing alcohols using said carbon supported cobalt molybdenum catalyst composition is provided.

No. of Pages : 29 No. of Claims : 13

(12) PATENT APPLICATION PUBLICATION
(19) INDIA
(22) Date of filing of Application :10/10/2013

(21) Application No.8819/DELNP/2013 A
(43) Publication Date : 19/12/2014

(54) Title of the invention : LIGHTING MODULE HAVING IMPROVED LIGHTING UNIFORMITY

(51) International classification :G02B6/00,G02F1/13357,F21S4/00
(31) Priority Document No :1152632
(32) Priority Date :30/03/2011
(33) Name of priority country :France
(86) International Application No :PCT/FR2012/050639
Filing Date :27/03/2012
(87) International Publication No :WO 2012/131249
(61) Patent of Addition to Application Number :NA
Filing Date :NA
(62) Divisional to Application Number :NA
Filing Date :NA

(71)**Name of Applicant :**
1)GB DEVELOPPEMENT
Address of Applicant :59 rue Voltaire F 92800 Puteaux France
(72)**Name of Inventor :**
1)BOULAIS Guillaume

(57) Abstract :
The present invention relates to a lighting module (1) comprising: 5 - at least one strip (7) of light emitting sources (2), a light guide (3) comprising a transmitting face (4) arranged to transmit, to an object to be lit, the light emitted by the 10 emitting sources (2), and a return face (5) facing the transmitting face (4). The emitting sources (2) are located inside the light guide (3) . According to the invention, the module further comprises for each light source, a transmitting 15 reflector (12) associated with this source and having a reflecting face (13) directed towards the transmitting face (4) so that the transmitting reflector associated with this source is located between the transmitting face (4) and an emitting surface (14) of this source arranged 20 for the output out of the source of the light emitted by this source.

No. of Pages : 54 No. of Claims : 24

(12) PATENT APPLICATION PUBLICATION
(19) INDIA
(22) Date of filing of Application :14/10/2013
(21) Application No.8899/DELNP/2013 A
(43) Publication Date : 19/12/2014

(54) Title of the invention : MEDICAL DEVICES HAVING HOMOGENEOUS CHARGE DENSITY AND METHODS FOR MAKING SAME

(51) International classification :G02B1/04
(31) Priority Document No :61/482379
(32) Priority Date :04/05/2011
(33) Name of priority country :U.S.A.
(86) International Application No :PCT/US2012/035722
Filing Date :29/04/2012
(87) International Publication No :WO 2012/151135
(61) Patent of Addition to Application Number :NA
Filing Date :NA
(62) Divisional to Application Number :NA
Filing Date :NA

(71)**Name of Applicant :**
1)JOHNSON & JOHNSON VISION CARE INC.
Address of Applicant :7500 Centurion Parkway Jacksonville FL 32256 U.S.A.
(72)**Name of Inventor :**
1)GEORGE Eric
2)MAHADEVAN Shivkumar
3)VENKATASUBBAN Kunisi
4)MAGGIO Thomas
5)FADLI Zohra
6)SCALES Charles
7)JOSLIN Scott L.
8)FORD James D.
9)DAVIS Carrie L.
10)HANSEN Leah

(57) Abstract :
The present invention relates to ionic silicone hydrogel polymers displaying improved lysozyme uptake low contact angle and reduced water soluble polymeric ammonium salt uptake.

No. of Pages : 60 No. of Claims : 42

(12) PATENT APPLICATION PUBLICATION
(19) INDIA
(22) Date of filing of Application :14/10/2013
(21) Application No.8900/DELNP/2013 A
(43) Publication Date : 19/12/2014

(54) Title of the invention : MACROINITIATOR CONTAINING HYDROPHOBIC SEGMENT

(51) International classification	:C08G77/26,C08G77/388,C08L83/08
(31) Priority Document No	:61/482260
(32) Priority Date	:04/05/2011
(33) Name of priority country	:U.S.A.
(86) International Application No	:PCT/US2012/035721
Filing Date	:29/04/2012
(87) International Publication No	:WO 2012/151134
(61) Patent of Addition to Application Number	:NA
Filing Date	:NA
(62) Divisional to Application Number	:NA
Filing Date	:NA

(71)**Name of Applicant :**
1)JOHNSON & JOHNSON VISION CARE INC.
Address of Applicant :7500 Centurion Parkway Jacksonville FL 32256 U.S.A.
(72)**Name of Inventor :**
1)TAMIYA Ryuta
2)FUJISAWA Kazuhiko
3)NAKAMURA Masataka

(57) Abstract :
The present invention relates to macroinitiators comprising at least one hydrophobic segments in a molecule wherein a molecular weight of the hydrophobic segment is 300 to 1800. The present invention further relates to block copolymers wetting agent and polymeric materials having the block copolymers of the present invention associated with which is suitable for medical devices particularly for ophthalmic devices including contact lenses ophthalmic lenses punctal plugs and artificial corneas.

No. of Pages : 32 No. of Claims : 23

(12) PATENT APPLICATION PUBLICATION
(19) INDIA
(22) Date of filing of Application :14/10/2013
(21) Application No.8902/DELNP/2013 A
(43) Publication Date : 19/12/2014

(54) Title of the invention : PROCESS FOR PREPARING A MONOLITHIC CATALYSIS ELEMENT COMPRISING A FIBROUS SUPPORT AND SAID MONOLITHIC CATALYSIS ELEMENT

(51) International classification :B01J21/18,B01J35/06,B01J37/08
(31) Priority Document No :1153370
(32) Priority Date :19/04/2011
(33) Name of priority country :France
(86) International Application No :PCT/FR2012/050829
Filing Date :16/04/2012
(87) International Publication No :WO 2012/143658
(61) Patent of Addition to Application Number :NA
Filing Date :NA
(62) Divisional to Application Number :NA
Filing Date :NA

(71)**Name of Applicant :**
1)SNEC-MA PROPULSION SOLIDE
Address of Applicant :Les Cinq Chemins, F- 33187 Le Haillan Cedex France
2)CENTRE NATIONAL DE LA RECHERCHE SCIENTIFIQUE
(72)**Name of Inventor :**
1)SOUQUET GRUMEY Julien
2)PLAISANTIN Herv
3)VALANGE Sabine
4)TATIBOUET Jean Michel
5)THEBAULT Jacques
6)BARRAULT Jo«l

(57) Abstract :
The subject of the prsent invention is a process for preparing a monolithic catalysis lment comprising a fibrous support and a catalytic phase supported by said fibrous support and also said monolithic catalysis lment. Said process comprises: the prparation of a porous cohrent structure based on refractory fibres; the prparation of a substrate comprising said porous co - herent structure and of the nanocarbon supported by said porous cohrent structure in the volume thereof; the grafting to said sub - strate, by p interaction, of at least one aromatic compound containing in its chemical formula, on the one hand, at least one aromatic ring, advantageously at least two, very advantageously four, aromatic rings and, on the other hand, at least one fonction chosen from acid catalytic fonctions, basic catalytic fonctions, metallic precursor fonctions, fonctions that can be transformed in situ into metallic precursor fonctions and mixtures thereof.

No. of Pages : 33 No. of Claims : 22

(12) PATENT APPLICATION PUBLICATION
(19) INDIA
(22) Date of filing of Application :11/10/2013
(21) Application No.8858/DELNP/2013 A
(43) Publication Date : 19/12/2014

(54) Title of the invention : PROCESS FOR PREPARING A SUSPENSION OF SOLID BIOMASS PARTICLES IN A HYDROCARBON CONTAINING LIQUID AND CONVERTING THE SUSPENSION

(51) International classification :C10G3/00,C10G11/18,B01J8/18
(31) Priority Document No :11163447.3
(32) Priority Date :21/04/2011
(33) Name of priority country :EPO
(86) International Application No :PCT/EP2012/057372
Filing Date :23/04/2012
(87) International Publication No:WO 2012/143552
(61) Patent of Addition to Application Number :NA
Filing Date :NA
(62) Divisional to Application Number :NA
Filing Date :NA

(71)**Name of Applicant :**
1)SHELL INTERNATIONALE RESEARCH MAATSCHAPPIJ B.V.
Address of Applicant :Carel van Bylandtlaan 30 NL 2596 HR The Hague Netherlands
(72)**Name of Inventor :**
1)BOON Andries Quirin Maria
2)GOSSELINK Johan Willem
3)HARRIS John William
4)JANSSEN Andries Hendrik
5)VAN PAASEN Sander
6)SCHAVERIEN Colin John
7)WAY Nicolaas Wilhelmus Joseph

(57) Abstract :
A catalytic cracking process comprising a) preparing a suspension of solid biomass particles in a hydrocarbon containing liquid comprising a first particle size reduction step wherein the particle size of a solid biomass material is reduced to produce a first particulate product comprising solid biomass particles; a mixing step wherein the first particulate product is suspended in a hydrocarbon containing liquid to produce a suspended first particulate product comprising solid biomass particles suspended in the hydrocarbon containing liquid;and a second particle size reduction step wherein the particle size of the suspended first particulate product is further reduced to produce a suspended second particulate product comprising solid biomass particles suspended in the hydrocarbon containing liquid; and b) contacting the suspension produced in step a)with a catalytic cracking catalyst at a temperature of more than 400°C in a catalytic cracking reactor to produce one or more cracked products.

No. of Pages : 42 No. of Claims : 15

(12) PATENT APPLICATION PUBLICATION
(19) INDIA
(22) Date of filing of Application :11/10/2013
(21) Application No.8859/DELNP/2013 A
(43) Publication Date : 19/12/2014

(54) Title of the invention : PROCESS FOR CONVERTING A SOLID BIOMASS MATERIAL

(51) International classification :C10G3/00,C10G11/18,B01J8/18
(31) Priority Document No :11163436.6
(32) Priority Date :21/04/2011
(33) Name of priority country :EPO
(86) International Application No :PCT/EP2012/057403
Filing Date :23/04/2012
(87) International Publication No:WO 2012/143564
(61) Patent of Addition to Application Number :NA
Filing Date :NA
(62) Divisional to Application Number :NA
Filing Date :NA

(71)**Name of Applicant :**
1)SHELL INTERNATIONALE RESEARCH MAATSCHAPPIJ B.V.
Address of Applicant :Carel van Bylandtlaan 30 NL 2596 HR The Hague Netherlands
(72)**Name of Inventor :**
1)SCHAVERIEN Colin John
2)JANSSEN Andries Hendrik
3)HARRIS John William
4)VAN PAASEN Sander
5)GOSSELINK Johan Willem
6)WAY Nicolaas Wilhelmus Joseph

(57) Abstract :
A process for converting a solid biomass material comprising contacting the solid biomass material with a catalytic cracking catalyst at a temperature of more than 400°C in a riser reactor to produce one or more cracked products wherein the riser reactor is an internal riser reactor.

No. of Pages : 41 No. of Claims : 12

(12) PATENT APPLICATION PUBLICATION
(19) INDIA
(22) Date of filing of Application :14/10/2013
(21) Application No.8910/DELNP/2013 A
(43) Publication Date : 19/12/2014

(54) Title of the invention : PROCESS FOR MAKING A MICRO TEXTURED WEB

(51) International classification :A61F13/15
(31) Priority Document No :13/094477
(32) Priority Date :26/04/2011
(33) Name of priority country :U.S.A.
(86) International Application No :PCT/US2012/034851
Filing Date :25/04/2012
(87) International Publication No :WO 2012/148936
(61) Patent of Addition to Application Number :NA
Filing Date :NA
(62) Divisional to Application Number :NA
Filing Date :NA

(71)**Name of Applicant :**
1)THE PROCTER & GAMBLE COMPANY
Address of Applicant :One Procter & Gamble Plaza Cincinnati OH 45202 U.S.A.
(72)**Name of Inventor :**
1)STONE Keith Joseph
2)COE Richard George
3)HILPERT Mathias Johannes
4)BUSCH James William
5)GUST Kasey Marie
6)GUMMALLA Rakesh

(57) Abstract :
Processes for making micro textured webs. The process comprises providing a precursor web; providing a pair of mated forming structures including a first forming structure and a second forming structure wherein at least the first forming structure comprises voids and wherein at least the second forming structure comprises protrusions; and moving the web through a deformation zone of the mated forming structures wherein the voids of the first forming structure engage with the protrusions of the second forming structure at an engagement position. Discrete three dimensional elements are formed in the web as the protrusions on the second forming structure engage with the voids on the first mating structure. At least one protrusion has center to center spacings of less than about 800 microns with at least three of its adjacent protrusions.

No. of Pages : 55 No. of Claims : 15

(12) PATENT APPLICATION PUBLICATION
(19) INDIA
(22) Date of filing of Application :14/10/2013
(21) Application No.8912/DELNP/2013 A
(43) Publication Date : 19/12/2014

(54) Title of the invention : THERMOELECTRIC CLUSTER METHOD FOR OPERATING SAME DEVICE FOR CONNECTING AN ACTIVE ELEMENT IN SAID CLUSTER TO A THERMOELECTRIC DRIVE GENERATOR (VARIANTS) AND HEAT PUMP (VARIANTS) BASED THEREON

(51) International classification :H01L35/28
(31) Priority Document No :2011111622
(32) Priority Date :29/03/2011
(33) Name of priority country :Russia
(86) International Application No :PCT/RU2012/000218
Filing Date :27/03/2012
(87) International Publication No :WO 2012/134348
(61) Patent of Addition to Application Number :NA
Filing Date :NA
(62) Divisional to Application Number :NA
Filing Date :NA

(71)**Name of Applicant :**
1)VERNIKOVSKY Yury Felixovich
Address of Applicant :ul. Marshala Novikova 4/1 19 Moscow 123098 Russia
2)STRELETSKY Sergei Nikolaevich
(72)**Name of Inventor :**
1)VERNIKOVSKY Yury Felixovich
2)STRELETSKY Sergei Nikolaevich

(57) Abstract :
The inventions are directed to the production of electrical power and/or heat transfer in heaters and coolers. The basis of all variants of the generator and the heat pump consists in a method for operating a thermoelectric cluster, in accordance with which method a corresponding heat-transfer agent is caused to act directly on corresponding thermoelectric conductors. In all apparatuses, use is made of a device for connecting an active element 1 to thermoelectric conductors 4 and 5, said device comprising an electrically and thermally conductive non-solidifying plastic mix, or a solder with a melting point lower than the working temperature, or a film of a plastic metal alloy, wherein the thermoelectric conductor and the active element are tightened elastically with respect to one another. The thermoelectric cluster formed comprises active elements 1 formed with a size in the direction of electrical current of no less than three times smaller than the size in the direction perpendicular thereto.

No. of Pages : 59 No. of Claims : 31

(12) PATENT APPLICATION PUBLICATION
(19) INDIA
(22) Date of filing of Application :11/10/2013
(21) Application No.8846/DELNP/2013 A
(43) Publication Date : 19/12/2014

(54) Title of the invention : METHODS FOR IMPROVEMENT OF ENZYMATIC HYDROLYSIS OF LIGNOCELLULLOSIC MATERIAL

(51) International classification :C12P7/10,C12P19/02,C12P19/04
(31) Priority Document No :11172123.9
(32) Priority Date :30/06/2011
(33) Name of priority country :EPO
(86) International Application No :PCT/EP2012/061021
Filing Date :11/06/2012
(87) International Publication No :WO 2013/000696
(61) Patent of Addition to Application Number :NA
Filing Date :NA
(62) Divisional to Application Number :NA
Filing Date :NA

(71)**Name of Applicant :**
1)SEKAB E TECHNOLOGY AB
Address of Applicant :Box 286 S 891 26 –rnskldsvik Sweden
(72)**Name of Inventor :**
1)J–NSSON Leif
2)ALRIKSSON Bjrn
3)SOUDHAM Venkata Prabhakar

(57) Abstract :
The present invention relates to a method of enzymatic hydrolysis of a lignocellulosic material, comprising the steps of: a) pretreating the lignocellulosic material to obtain a slurry having a pH of less than 6; b) adding NaOH, Ca(OH) 2 and/or CaO to the slurry to increase its pH to at least 8, said addition being carried out at a slurry temperature of at least 60 °C; c) reducing the pH of the slurry to below 7 ; and optionally cooling the slurry from step b) to a temperature below 60 °C; and d) adding hydrolytic en zymes to the slurry from c) and allowing the slurry to hydro lyze wherein no washing of the slurry is performed prior to step d).

No. of Pages : 24 No. of Claims : 13

(12) PATENT APPLICATION PUBLICATION
(19) INDIA
(22) Date of filing of Application :11/10/2013
(21) Application No.8847/DELNP/2013 A
(43) Publication Date : 19/12/2014

(54) Title of the invention : VEHICLE SEAT

(51) International classification :B60N2/06,B60N2/14,B60N2/02
(31) Priority Document No :10 2011 103 225.1
(32) Priority Date :01/06/2011
(33) Name of priority country :Germany
(86) International Application No:PCT/EP2012/002189
Filing Date :23/05/2012
(87) International Publication No :WO 2012/163493
(61) Patent of Addition to Application Number :NA
Filing Date :NA
(62) Divisional to Application Number :NA
Filing Date :NA

(71)**Name of Applicant :**
1)KEIPER GMBH & CO. KG
Address of Applicant :Hertelsbrunnenring 2 67657 Kaiserslautern Germany
(72)**Name of Inventor :**
1)ROTH Michael
2)JUNG Markus

(57) Abstract :
The invention relates to a vehicle seat (1) having a seat shell (2), comprising a first upper rail (16), which is arranged on the tunnel side and is movably guided in a first lower rail (10), and a second upper rail (18), which is arranged on the sill side and is movably guided in a second lower rail (12), wherein the first upper rail (16) can be displaced relative to the second upper rail (18), and wherein due to a displacement of the first upper rail (16) relative to the second upper rail (18) the seat shell (2) carries out a rotation about a vertically extending pivot axis. A main memory device (58) is provided on the second upper rail (18), and at least one spring unit (52) is provided, which acts upon the first upper rail (16) relative to the second upper rail (18) in the longitudinal direction.

No. of Pages : 23 No. of Claims : 13

(12) PATENT APPLICATION PUBLICATION
(19) INDIA
(22) Date of filing of Application :11/10/2013
(21) Application No.8848/DELNP/2013 A
(43) Publication Date : 19/12/2014

(54) Title of the invention : DEVICE FOR COOLING HOT ROLLED STEEL SHEET

(51) International classification :B21B37/76,B21B45/02
(31) Priority Document No :NA
(32) Priority Date :NA
(33) Name of priority country :NA
(86) International Application No :PCT/JP2012/081659
Filing Date :06/12/2012
(87) International Publication No :WO 2014/087520
(61) Patent of Addition to Application Number :NA
Filing Date :NA
(62) Divisional to Application Number :NA
Filing Date :NA

(71)**Name of Applicant :**
1)NIPPON STEEL & SUMITOMO METAL CORPORATION
Address of Applicant :6 1 Marunouchi 2 chome Chiyoda ku Tokyo 1008071 Japan
(72)**Name of Inventor :**
1)AKASHI Tooru
2)KURIYAMA Shingo
3)ITOH Takeo
4)NOGUCHI Koji

(57) Abstract :
This device for cooling a hot rolled steel sheet comprises: a thermometer that measures the temperature of a hot rolled steel sheet; a shape gauge that measures the shape of the hot rolled steel sheet; an upper side cooling device that cools the upper surface of the hot rolled steel sheet in a cooling zone; a lower side cooling device that cools the lower surface of the hot rolled steel sheet in the cooling zone; and a control device that controls the upper surface cooling/heat removal amount and/or the lower surface cooling/heat removal amount of the hot rolled steel sheet in the cooling zone by controlling the upper side cooling device and the lower side cooling device on the basis of the temperature measurement result and the shape measurement result.

No. of Pages : 76 No. of Claims : 5

(12) PATENT APPLICATION PUBLICATION
(19) INDIA
(22) Date of filing of Application :11/10/2013
(21) Application No.8849/DELNP/2013 A
(43) Publication Date : 19/12/2014

(54) Title of the invention : STEEL SHEET FOR HOT STAMPING MEMBERS AND METHOD FOR PRODUCING SAME

(51) International classification :C22C38/00,B21B3/00,C21D9/46
(31) Priority Document No :2011100019
(32) Priority Date :27/04/2011
(33) Name of priority country :Japan
(86) International Application No :PCT/JP2012/061238
Filing Date :26/04/2012
(87) International Publication No :WO 2012/147863
(61) Patent of Addition to Application Number :NA
Filing Date :NA
(62) Divisional to Application Number :NA
Filing Date :NA

(71)**Name of Applicant :**
1)NIPPON STEEL & SUMITOMO METAL CORPORATION
Address of Applicant :6 1 Marunouchi 2 chome Chiyoda ku Tokyo 1008071 Japan
(72)**Name of Inventor :**
1)TANAHASHI Hiroyuki
2)MAKI Jun

(57) Abstract :
This steel sheet for not stamping members has a chemical composition which contains, m mass%, 0.10-0.35% of C , 0.01-1.0% o f Si, 0.3-2.3% o f M n and 0.01-0.5% of Al, while suppressing P to 0.03% or less, S to 0.02% or less and N to 0 . 1% or less, with the balance made up of Fe and unavoidable impurities. This steel sheet for hot stamping members has a standard deviation of the particle diameters of iron carbides of 0.8 mpi or less, said iron carbides being contained in the region of the steel sheet from the surface to 1/4 the sheet thickness.

No. of Pages : 62 No. of Claims : 11

(12) PATENT APPLICATION PUBLICATION
(19) INDIA
(22) Date of filing of Application :14/10/2013
(21) Application No.8918/DELNP/2013 A
(43) Publication Date : 19/12/2014

(54) Title of the invention : METHOD OF SECURITY SCREENING AND SECURITY TRAY FOR USE THEREWITH

(51) International classification :G01N23/04,B65D1/36,B65D25/00
(31) Priority Document No :61/453027
(32) Priority Date :15/03/2011
(33) Name of priority country :U.S.A.
(86) International Application No :PCT/CA2012/000309
Filing Date :15/03/2012
(87) International Publication No :WO 2012/122641
(61) Patent of Addition to Application Number :NA
Filing Date :NA
(62) Divisional to Application Number :NA
Filing Date :NA

(71)**Name of Applicant :**
1)STEELHEAD SECURITY INC.
Address of Applicant :Suite 1400 355 Burrard Street Vancouver British Columbia V6C 2G8 Canada
(72)**Name of Inventor :**
1)STEELE Reesa Gayle
2)ROSS Douglas Albert
3)BRIMSON Garry Allen

(57) Abstract :
A method for allowing security personnel in screening stations to more quickly identify prohibited articles and to identify and interrogate the screened individual responsible for the prohibited article thereby improving throughput and reducing human error. If an operator observes articles which raise a security concern the operator isolates the location of such articles by referencing the compartment in the tray where it is located and optionally whether the article is in a high or low position in the compartment and by referencing a tray s unique identifier. A security tray design is provided to carry out the method which includes discrete delineated compartments and optionally a unique identifier and an area for displaying the screened individual s identification to connect the individual to a unique tray to assist in preventing individuals from gaining access to restricted areas with prohibited articles.

No. of Pages : 26 No. of Claims : 25

(12) PATENT APPLICATION PUBLICATION
(19) INDIA
(22) Date of filing of Application :04/10/2013
(21) Application No.8642/DELNP/2013 A
(43) Publication Date : 19/12/2014

(54) Title of the invention : BAG FILTER FOR CLEANING DUST LADEN GASES AND INJECTOR NOZZLE FOR SUCH A BAG FILTER

(51) International classification :B01D46/00,B01D46/24
(31) Priority Document No :A 472/2011
(32) Priority Date :04/04/2011
(33) Name of priority country :Austria
(86) International Application No :PCT/AT2012/000091
Filing Date :04/04/2012
(87) International Publication No :WO 2012/135881
(61) Patent of Addition to Application Number :NA
Filing Date :NA
(62) Divisional to Application Number :NA
Filing Date :NA

(71)**Name of Applicant :**
1)SCHEUCH GMBH
Address of Applicant :Weierfing 68 A 4971 Aurolzm¼nster Austria
(72)**Name of Inventor :**
1)SCHWARZL G¼nter
2)LISBERGER Manfred
3)DAXDOBLER J¼rgen
4)HELML Josef

(57) Abstract :
The invention relates to a bag filter for cleaning dust laden gases (A) comprising a housing (1) which is divided into a filtered gas side (6) and a unfiltered gas side (5) by a bag bottom (2) having openings (3) in which housing (1) several filter bags (4) having a flat cross section are arranged in the openings (3) of the bag bottom (2). According to the invention each support basket (12) is connected at the end associated with the open end of the respective filter bag (4) to an injector nozzle (15) for conducting and accelerating the dedusting compressed air pulses which injector nozzle (15) protrudes at least partially into the openings (3) of the bag bottom (2) and sealing elements (16) are arranged on the outside of the injector nozzle (15) at the height of the bag bottom (3) in order to form a defined gap (d) for a defined compression of the filter bag (4) between the sealing elements (16) and the jacket surface (17) of the opening (3) in the bag bottom (2) and thus to independently seal the filter bag (4) with respect to the opening (3) of the bag bottom (2).

No. of Pages : 20 No. of Claims : 18

(12) PATENT APPLICATION PUBLICATION
(19) INDIA
(22) Date of filing of Application :04/10/2013
(21) Application No.8643/DELNP/2013 A
(43) Publication Date : 19/12/2014

(54) Title of the invention : IMPROVED METHOD OF CONTROLLING LITHIUM UNIFORMITY

(51) International classification :C23C14/00,C23C14/18,C23C14/54
(31) Priority Document No :61/472758
(32) Priority Date :07/04/2011
(33) Name of priority country :U.S.A.
(86) International Application No :PCT/US2012/030563
Filing Date :26/03/2012
(87) International Publication No :WO 2012/138498
(61) Patent of Addition to Application Number :NA
Filing Date :NA
(62) Divisional to Application Number :NA
Filing Date :NA

(71)**Name of Applicant :**
1)SAGE ELECTROCHROMICS INC.
Address of Applicant :One Sage Way Faribault MN 55021 U.S.A.
(72)**Name of Inventor :**
1)BJORNARD Erik

(57) Abstract :
A method and apparatus for providing uniform coatings of lithium on a substrate are provided. In one aspect of the present invention is a method of selectively controlling the uniformity and/or rate of deposition of a metal or lithium in a sputter process by introducing a quantity of reactive gas over a specified area in the sputter chamber. This method is applicable to planar and rotating targets.

No. of Pages : 34 No. of Claims : 27

(12) PATENT APPLICATION PUBLICATION
(19) INDIA
(22) Date of filing of Application :04/10/2013
(21) Application No.8645/DELNP/2013 A
(43) Publication Date : 19/12/2014

(54) Title of the invention : SET OF BEVERAGE PREPARATION MACHINES DIFFERING BY THEIR SIZES

(51) International classification :A47J31/44
(31) Priority Document No :11161214.9
(32) Priority Date :05/04/2011
(33) Name of priority country :EPO
(86) International Application No :PCT/EP2012/056092
Filing Date :03/04/2012
(87) International Publication No :WO 2012/136666
(61) Patent of Addition to Application Number :NA
Filing Date :NA
(62) Divisional to Application Number :NA
Filing Date :NA

(71)**Name of Applicant :**
1)NESTEC S. A.
Address of Applicant :Av. Nestl 55 CH 1800 Vevey Switzerland
(72)**Name of Inventor :**
1)REUST Alexis
2)BRUNNER Yann

(57) Abstract :
The invention concerns a set of differing beverage production machines (10a 10b) presenting different sizes the machines having a housing comprising : one left one right and one back side core housing panels (1 2 3) one bottom housing said bottom housing being selected in a plurality of bottom housings (5a 5b) differing by their width sizes none or at least one back side extending housing panel (4) for laterally extending the housing none or at least a set of one left one right and one back side extending housing panel (6 7 8) for vertically extending the housing.

No. of Pages : 15 No. of Claims : 12

(12) PATENT APPLICATION PUBLICATION
(19) INDIA
(22) Date of filing of Application :14/10/2013
(21) Application No.8920/DELNP/2013 A
(43) Publication Date : 19/12/2014

(54) Title of the invention : NUTRITIONAL COMPOSITIONS HAVING ALPHA HICA AND EICOSAPENTAENOIC ACID

(51) International classification :A23L1/30,A61K31/19,A23L1/305
(31) Priority Document No :61/476345
(32) Priority Date :18/04/2011
(33) Name of priority country :U.S.A.
(86) International Application No :PCT/EP2012/057094
Filing Date :18/04/2012
(87) International Publication No :WO 2012/143404
(61) Patent of Addition to Application Number :NA
Filing Date :NA
(62) Divisional to Application Number :NA
Filing Date :NA

(71)**Name of Applicant :**
1)NESTEC S.A.
Address of Applicant :Av. Nestl 55 CH 1800 Vevey Switzerland
(72)**Name of Inventor :**
1)GREENBERG Norman Alan
2)BREUILLE Denis
3)ROUGHEAD Zamzam Kabiry (Fariba)
4)BOLSTER Doug
5)MAGER Jennifer

(57) Abstract :
Nutritional compositions for maximizing muscle protein synthesis while minimizing the catabolism of muscle pro - teins and methods of using same are provided. In this manner, the nutritional compositions may provide for retention of lean body mass, which helps to avoid loss of independence and functionality, as well as to improve quality of life especially in the elderly at risk of sarcopema and frailty. The nutritional compositions include a-hydroxyisocaproic acid eicosapentaenoic acid. It may include other functional ingredients such as, but not limited to whey protein incuding whey protein micelles, prebiotic fibers, citrulline, aketoglutarate, L-carnitine, nucleotides, and amino acids. Methods of administering such nutritional products to individuals in need of same are also provided.

No. of Pages : 37 No. of Claims : 52

(12) PATENT APPLICATION PUBLICATION
(19) INDIA
(22) Date of filing of Application :11/10/2013
(21) Application No.8888/DELNP/2013 A
(43) Publication Date : 19/12/2014

(54) Title of the invention : INCREMENTAL HIGH RADIX NETWORK SCALING

(51) International classification :H04L12/66
(31) Priority Document No :13/077636
(32) Priority Date :31/03/2011
(33) Name of priority country :U.S.A.
(86) International Application No :PCT/US2012/031117
Filing Date :29/03/2012
(87) International Publication No :WO 2012/135439
(61) Patent of Addition to Application Number :NA
Filing Date :NA
(62) Divisional to Application Number :NA
Filing Date :NA

(71)**Name of Applicant :**
1)AMAZON TECHNOLOGIES INC.
Address of Applicant :PO Box 8102 Reno NV 89507 U.S.A.
(72)**Name of Inventor :**
1)MARR Michael David

(57) Abstract :
Efficient and highly- scalable network solutions are provided that utilize incremental scaling of switches, and devices connected to those switches, in an environment such as a data center. Embodiments may utilize multiple tiers of switches. Sets of switches in two different tiers may be initially connected to each other utilizing multiple connections. As network capacity needs within the computing environment increase, additional switches may be added to tiers. To connect the added switches to the switch network, the redundant connections may be utilized. Moving connections from one switch to another switch can free up ports to connect added switches in one of the tiers of switches to the switch network. The tiers of switches can be based on Clos networks, where the tiers of switches are fully connected, or other high radix or fat tree topologies that include oversubscription between tiers.

No. of Pages : 42 No. of Claims : 15

(12) PATENT APPLICATION PUBLICATION
(19) INDIA
(22) Date of filing of Application :11/10/2013
(21) Application No.8889/DELNP/2013 A
(43) Publication Date : 19/12/2014

(54) Title of the invention : REINFORCING FIBER COMPOSITE MATERIAL

(51) International classification :C08J5/04,B29C43/34,B29C70/10
(31) Priority Document No :2011090218
(32) Priority Date :14/04/2011
(33) Name of priority country :Japan
(86) International Application No :PCT/JP2011/070317
Filing Date :31/08/2011
(87) International Publication No :WO 2012/140793
(61) Patent of Addition to Application Number :NA
Filing Date :NA
(62) Divisional to Application Number :NA
Filing Date :NA

(71)**Name of Applicant :**
1)TEIJIN LIMITED
Address of Applicant :6 7 Minamihommachi 1 chome Chuo ku Osaka shi Osaka 5410054 Japan
(72)**Name of Inventor :**
1)HAGIHARA Katsuyuki
2)KONAGAI Yuhei
3)SONODA Naoaki
4)TESHIMA Masatomo

(57) Abstract :
The purpose of the present invention is to provide a fiber reinforced composite material which comprises reinforcing fibers and a thermoplastic resin can exhibit excellent mechanical properties even when formed in a small thickness and enables the provision of an isotropic molding. The present invention is a reinforcing fiber composite material comprising reinforcing fibers each having a fiber length of 5 100 mm and a thermoplastic resin and characterized in that the average value for a viscoelastic property which is defined by formulae (1) and (2) at a temperature up to 25°C higher or lower the melting point of a matrix resin fulfills formula (3). tan5 = GVG (1) tan5 = Vfxtan5/(100-Vf) (2) 0.01 ≤ tan5 ≤ 0.2 (3) (In the formulae, G represents the storage elastic modulus (Pa) of the reinforcing fiber composite material; G represents the loss elastic modulus (Pa) of the reinforcing fiber composite material; and Vf represents the volume fraction (%) of the reinforcing fibers in the reinforcing fiber composite material.)

No. of Pages : 37 No. of Claims : 6

(12) PATENT APPLICATION PUBLICATION
(19) INDIA
(22) Date of filing of Application :11/10/2013
(21) Application No.8890/DELNP/2013 A
(43) Publication Date : 19/12/2014

(54) Title of the invention : FRAMEWORKS AND INTERFACES FOR OFFLOAD DEVICE BASED PACKET PROCESSING

(51) International classification :G06F15/16
(31) Priority Document No :13/076339
(32) Priority Date :30/03/2011
(33) Name of priority country :U.S.A.
(86) International Application No :PCT/US2012/031121
Filing Date :29/03/2012
(87) International Publication No :WO 2012/135442
(61) Patent of Addition to Application Number :NA
Filing Date :NA
(62) Divisional to Application Number :NA
Filing Date :NA

(71)**Name of Applicant :**
1)AMAZON TECHNOLOGIES INC.
Address of Applicant :P.O. Box 8102 Reno Nevada 89507 U.S.A.
2)MCKELVIE Samuel J.
(72)**Name of Inventor :**
1)VINCENT Pradeep
2)KLEIN Matthew D.
3)NA

(57) Abstract :
High-speed processing of packets to, and from, a virtualization environment can be provided while utilizing hardo ware-based segmentation offload and other such functionality. A hardware vendor such as a network interface card (NIC) manufac - hirer can enable the hardware to support open and proprietary stateless tunneling in conjunction with a protocol such as single root I/O virtualization (SR-IOV) in order to implement a virtualized overlay network. The hardware can utilize various rules, for ex - ample, that can be used by the NIC to perform certain actions, such as to encapsulate egress packets and decapsulate packets.

No. of Pages : 62 No. of Claims : 15

(12) PATENT APPLICATION PUBLICATION
(19) INDIA
(22) Date of filing of Application :11/10/2013
(21) Application No.8891/DELNP/2013 A
(43) Publication Date : 19/12/2014

(54) Title of the invention : A METHOD OF FORMING CERAMIC ARTICLES FROM RECYCLED ALUMINOSILICATES

(51) International classification :C04B35/18
(31) Priority Document No :NA
(32) Priority Date :NA
(33) Name of priority country :NA
(86) International Application No :PCT/CN2011/073046
Filing Date :20/04/2011
(87) International Publication No :WO 2012/142752
(61) Patent of Addition to Application Number :NA
Filing Date :NA
(62) Divisional to Application Number :NA
Filing Date :NA

(71)**Name of Applicant :**
1)VECOR IP HOLDINGS LIMITED
Address of Applicant :Room 801 Workington Tower 78 Bonham Strand East Sheung Wan Hong Kong China
(72)**Name of Inventor :**
1)KOSZO Sandor

(57) Abstract :
The present invention relates to a process of forming ceramic articles that contain a high percentage of recycled alumina silicate in their composition. The fabrication process includes a fusing of the base material forming a reticulated network that is in filled with a melted additive composition. The base material gives the article dimensional stability and strength while the additive composition gives the article water resistance and toughness. In this invention an additive powder with an engineered melting temperature is added to the recycled base material. The mixture is heated until the recycled aluminosilicate reaches the optimal fusing temperature. Heating is continued until the additive begins to melt filling the voids between the fused aluminosilicates particles. The article is then rapidly cooled to quench the fusing without cracking. The resulting article has high strength due to the fused alumina silicate particles and low water absorbance and high density due to the melted additive component filling all the pores between the fused alumina silicate particles.

No. of Pages : 22 No. of Claims : 16

(12) PATENT APPLICATION PUBLICATION
(19) INDIA
(22) Date of filing of Application :09/10/2013
(21) Application No.8766/DELNP/2013 A
(43) Publication Date : 19/12/2014

(54) Title of the invention : INFANT FORMULA FOR USE IN THE PREVENTION OF CARDIOVASCULAR DISEASES

(51) International classification :A61K38/01,A23L1/29,A61P9/00
(31) Priority Document No :11163011.7
(32) Priority Date :19/04/2011
(33) Name of priority country :EPO
(86) International Application No :PCT/EP2012/057024
Filing Date :17/04/2012
(87) International Publication No :WO 2012/143362
(61) Patent of Addition to Application Number :NA
Filing Date :NA
(62) Divisional to Application Number :NA
Filing Date :NA

(71)**Name of Applicant :**
1)NESTEC S.A.
Address of Applicant :Av. Nestl 55 CH 1800 Vevey Switzerland
(72)**Name of Inventor :**
1)MACE Catherine
2)STEENHOUT Philippe

(57) Abstract :
An infant formula comprising at least a source of proteins a source of lipids a source of carbohydrates wherein the protein content is below 2.1 g/100kcal for use in the prevention of cardiovascular diseases in particular for the prevention of cardiovascular diseases associated with high blood pressure. Preferably said composition is a starter infant formula.

No. of Pages : 20 No. of Claims : 11

(12) PATENT APPLICATION PUBLICATION
(19) INDIA
(22) Date of filing of Application :14/10/2013
(21) Application No.8928/DELNP/2013 A
(43) Publication Date : 19/12/2014

(54) Title of the invention : EYE MARKER DEVICE

(51) International classification :A61F9/007
(31) Priority Document No :61/466506
(32) Priority Date :23/03/2011
(33) Name of priority country :U.S.A.
(86) International Application No :PCT/US2012/030123
Filing Date :22/03/2012
(87) International Publication No :WO 2012/129405
(61) Patent of Addition to Application Number :NA
Filing Date :NA
(62) Divisional to Application Number :NA
Filing Date :NA

(71)**Name of Applicant :**
1)MINDSKID LABS LLC
Address of Applicant :1717 Shipyard Boulevard Suite 140 Wilmington NC 28403 U.S.A.
(72)**Name of Inventor :**
1)BROWN Alan Wesley

(57) Abstract :
The present invention provides methods and systems for an eye marker device that includes a handle having an interior cavity a marking means coupled to the handle and a rotational scale for providing a visual representation of the angle of the marking means relative to a predetermined origination point. The marking means has a marking head with a marking end and a posterior end that contains at least one marking tip disposed on the marking end.

No. of Pages : 32 No. of Claims : 16

(12) PATENT APPLICATION PUBLICATION
(19) INDIA
(22) Date of filing of Application :15/10/2013
(21) Application No.8929/DELNP/2013 A
(43) Publication Date : 19/12/2014

(54) Title of the invention : CLOSURE WITH FOLDED UP TAMPER EVIDENT BAND

(51) International classification :B65D41/32,B65D55/06
(31) Priority Document No :2011901276
(32) Priority Date :06/04/2011
(33) Name of priority country :Australia
(86) International Application No :PCT/AU2012/000349
Filing Date :05/04/2012
(87) International Publication No :WO 2012/135906
(61) Patent of Addition to Application Number :NA
Filing Date :NA
(62) Divisional to Application Number :NA
Filing Date :NA

(71)**Name of Applicant :**
1)CREANOVA UNIVERSAL CLOSURES LIMITED
Address of Applicant :5 Shannon Point Oakfield Close Tewkesbury Business Park Tewkesbury Gloucestershire GL20 8PF U.K.
(72)**Name of Inventor :**
1)BEVAN David
2)DRUITT Rodney

(57) Abstract :
A closure (10,30) attachable to a container having an opening. The closure (10,30) comprising a top portion (11) and a skirt portion (12) depending from the top portion (11). A tamper evident band (13,33) is joined to the skirt portion (12) by one or more frangible connectors (14,34). The band (13,33) comprises a first portion (15,35) extending generally away from the skirt portion (12) and a second portion (16,36) hingedly connected to the first portion (15,35) and movable between a first moldable orienta - tion and at least a second operable orientation. For closure (10), the second portion (16) comprises a plurality of curved undercuts (18) extending at least partially into a cavity of the closure (10) when it is in its operable orientation. For closure (30), the inner sur - face (35a) of the first portion (35) can have a plurality of inwardly extending protuberances (40) positioned thereon.

No. of Pages : 20 No. of Claims : 19

(12) PATENT APPLICATION PUBLICATION
(19) INDIA
(22) Date of filing of Application :15/10/2013
(21) Application No.8930/DELNP/2013 A
(43) Publication Date : 19/12/2014

(54) Title of the invention : MOLYBDENUM DIALKYLDITHIOCARBAMATE COMPOSITIONS AND LUBRICATING COMPOSITIONS CONTAINING THE SAME

(51) International classification :C10M135/18
(31) Priority Document No :61/476060
(32) Priority Date :15/04/2011
(33) Name of priority country :U.S.A.
(86) International Application No :PCT/US2012/029865
Filing Date :21/03/2012
(87) International Publication No :WO 2012/141855
(61) Patent of Addition to Application Number :NA
Filing Date :NA
(62) Divisional to Application Number :NA
Filing Date :NA

(71)**Name of Applicant :**
1)R.T. VANDERBILT CHEMICALS LLC.
Address of Applicant :30 Winfield Street Norwalk CT 06855 U.S.A.
(72)**Name of Inventor :**
1)DONNELLY Steven G.
2)AGUILAR Gaston A.
3)CHASE Kevin J.
4)WALLACK William T.

(57) Abstract :
A novel molybdenum dithiocarbamate composition is produced by preparing a ditridecylamine (DTD A) intermediate from a butylene feedstock comprising greater than 50% 2-butylene, and preparing a molybdenum dithiocarbamate composition from the DTDA intermediate. The resulting molybdenum dithiocarbamate composition are according to formula (1), wherein Ri to R4 are C 11-C14 isoalkyl groups, and X represents oxygen and/or sulfur atoms, and Ri to R4 comprise, on average, greater than 98% C13.

No. of Pages : 28 No. of Claims : 11

(12) PATENT APPLICATION PUBLICATION
(19) INDIA
(22) Date of filing of Application :15/10/2013
(21) Application No.8931/DELNP/2013 A
(43) Publication Date : 19/12/2014

(54) Title of the invention : NON ORIENTED ELECTROMAGNETIC STEEL SHEET METHOD FOR PRODUCING SAME LAMINATE FOR MOTOR IRON CORE AND METHOD FOR PRODUCING SAID LAMINATE

(51) International classification :C22C38/00,B21B3/02,C21D8/12
(31) Priority Document No :2011179111
(32) Priority Date :18/08/2011
(33) Name of priority country :Japan
(86) International Application No :PCT/JP2012/070861
Filing Date :16/08/2012
(87) International Publication No :WO 2013/024894
(61) Patent of Addition to Application Number :NA
Filing Date :NA
(62) Divisional to Application Number :NA
Filing Date :NA

(71)**Name of Applicant :**
1)NIPPON STEEL & SUMITOMO METAL CORPORATION
Address of Applicant :6 1 Marunouchi 2 chome Chiyoda ku Tokyo 1008071 Japan
(72)**Name of Inventor :**
1)FUJIKURA Masahiro
2)USHIGAMI Yoshiyuki
3)MURAKAWA Tesshu
4)KANAO Shinichi
5)ATAKE Makoto
6)ICHIE Takeru
7)HORI Kojiro
8)MATSUI Shinichi

(57) Abstract :
When Q=([Ti]/48+[V]/5 1+[Zr]/9 1+[Nb]/93)/([C]/ 12), the value of the parameter Q is between 0.9 and 1. 1 . (In the equation, [Ti], [V], [Zr], [Nb], and [C] respectively represents the content of Ti, V , Zr, Nb, and C in mass %.) The parent phase of a metal structure is a ferrite phase and the metal structure does not contain a non-recrystallized structure. The ferrite particles constituting the ferrite phase have an average particle size between 10 μπι and 200 μπι. Deposits containing at least one element selected from among Ti, V , Zr, and N b are present in the ferrite particles at a density of 10/ μπι 3 or more. The average particle size of the deposits is between 0.002 μπι and 0.2 μπι .

No. of Pages : 45 No. of Claims : 16

(12) PATENT APPLICATION PUBLICATION
(19) INDIA
(22) Date of filing of Application :11/10/2013
(21) Application No.8892/DELNP/2013 A
(43) Publication Date : 19/12/2014

(54) Title of the invention : APPARATUSES SYSTEM AND METHODS FOR FORMING PRESSED ARTICLES AND PRESSED ARTICLES FORMED THEREBY

(51) International classification :B28B3/04,B28B3/12,B28B5/02
(31) Priority Document No :NA
(32) Priority Date :NA
(33) Name of priority country :NA
(86) International Application No :PCT/IT2011/000127
Filing Date :22/04/2011
(87) International Publication No :WO 2012/143960
(61) Patent of Addition to Application Number :NA
Filing Date :NA
(62) Divisional to Application Number :NA
Filing Date :NA

(71)**Name of Applicant :**
1)VECOR IP HOLDINGS LTD
Address of Applicant :Chuangs Tower 30 32 Connaught Road Central Suite 1002 Hongkong(China)
2)MASS S.p.A.
(72)**Name of Inventor :**
1)KOSZO Sandor
2)BARDELLI Lodovico

(57) Abstract :
The invention relates to a method and a system (10) for forming pressed articles by pressing powder or granules the system comprising the following apparatuses: a powder discharge assembly (12); a no cavity press assembly (20) including: an bottom plate (22) that is the same size or greater than the pressed articles a constraining means to isolate a portion of powder and a top punch (24); and a conveyor (14) to transport the powder and/or pressed articles.

No. of Pages : 36 No. of Claims : 43

(12) PATENT APPLICATION PUBLICATION
(19) INDIA
(22) Date of filing of Application :15/10/2013
(21) Application No.8933/DELNP/2013 A
(43) Publication Date : 19/12/2014

(54) Title of the invention : THERMOPLASTIC ELASTOMER COMPOSITION

(51) International classification :B60C13/00
(31) Priority Document No :NA
(32) Priority Date :NA
(33) Name of priority country :NA
(86) International Application No :PCT/US2011/033442
Filing Date :21/04/2011
(87) International Publication No :WO 2012/145005
(61) Patent of Addition to Application Number :NA
Filing Date :NA
(62) Divisional to Application Number :NA
Filing Date :NA

(71)**Name of Applicant :**
1)THE YOKOHAMA RUBBER CO. LTD.
Address of Applicant :36-11 Shimbashi 5 chome Minato ku Tokyo 105 8685 Japan
2)EXXONMOBIL CHEMICAL PATENTS INC.
(72)**Name of Inventor :**
1)TOMOI Shusaku

(57) Abstract :
In order to improve fatigue durability of a thermoplastic elastomer composition composed of a matrix phase of a thermoplastic resin and dispersed phases of a rubber the thermoplastic elastomer composition comprises (A) 100 parts by weight of a halogenated poly (isoolefm-co-p-alkylstyrene) rubber (B) 40 to 120 parts by weight of a polyamide resin and (C) 0.5 to 10 parts by weight of an amine having at least one hydroxyl group. The amine (C) having at least one hydroxyl group is preferably a compound represented by formula (1) : where R1 is a Ci-30 alkyl; R2 is -(C2H4O)¸¸-H, where n is an integer of 1 to 30; and R3 is -(C2H4O)m -H, where m is an integer of 1 to 30, a C1-30 alkyl or hydrogen.

No. of Pages : 26 No. of Claims : 14

(12) PATENT APPLICATION PUBLICATION
(19) INDIA
(22) Date of filing of Application :15/10/2013
(21) Application No.8934/DELNP/2013 A
(43) Publication Date : 19/12/2014

(54) Title of the invention : SUN VISOR FOR A VEHICLE

(51) International classification :B60J3/02
(31) Priority Document No :10 2011 014 229.0
(32) Priority Date :17/03/2011
(33) Name of priority country :Germany
(86) International Application No :PCT/EP2012/001184
Filing Date :16/03/2012
(87) International Publication No :WO 2012/123127
(61) Patent of Addition to Application Number :NA
Filing Date :NA
(62) Divisional to Application Number :NA
Filing Date :NA

(71)**Name of Applicant :**
1)JOHNSON CONTROLS INTERIORS GMBH & CO. KG
Address of Applicant :M¼lhausener Str. 35 47929 Grefrath Germany
(72)**Name of Inventor :**
1)DOLISY Jacky

(57) Abstract :
The invention relates to a sun visor for a vehicle which has a visor body and a fastening region wherein the fastening region is for fastening the visor body to a counterpart attached to a vehicle.

No. of Pages : 13 No. of Claims : 10

(12) PATENT APPLICATION PUBLICATION
(19) INDIA
(22) Date of filing of Application :15/10/2013
(21) Application No.8936/DELNP/2013 A
(43) Publication Date : 19/12/2014

(54) Title of the invention : SELF ALIGNING OIL FILM BEARING

(51) International classification :F16C23/04
(31) Priority Document No :13/114407
(32) Priority Date :24/05/2011
(33) Name of priority country :U.S.A.
(86) International Application No :PCT/US2012/037421
Filing Date :11/05/2012
(87) International Publication No :WO 2012/161984
(61) Patent of Addition to Application Number :NA
Filing Date :NA
(62) Divisional to Application Number :NA
Filing Date :NA

(71)**Name of Applicant :**
1)SIEMENS INDUSTRY INC.
Address of Applicant :3333 Old Milton Parkway Alpharetta Georgia 30005 4437 U.S.A.
(72)**Name of Inventor :**
1)OSGOOD Peter N.
2)WOJTKOWSKI JR. Thomas C.

(57) Abstract :
An oil film bearing for rotatably supporting a shaft comprises a spherical housing having a bore in which the shaft is rotatably supported and an outer spherical surface. A chock contains the spherical housing. The chock is internally configured with an inner spherical surface coacting with the outer spherical surface of the spherical housing to define a raceway configured to accommodate angular rotation of the shaft about a central point.

No. of Pages : 18 No. of Claims : 16

(12) PATENT APPLICATION PUBLICATION
(19) INDIA
(22) Date of filing of Application :15/10/2013
(21) Application No.8938/DELNP/2013 A
(43) Publication Date : 19/12/2014

(54) Title of the invention : MONOLITHIC INTEGRATED SEMICONDUCTOR STRUCTURE

(51) International classification :H01L
(31) Priority Document No :10 2011 107657.7
(32) Priority Date :12/07/2011
(33) Name of priority country :Germany
(86) International Application No :PCT/DE2012/000589
Filing Date :25/04/2012
(87) International Publication No : NA
(61) Patent of Addition to Application Number :NA
Filing Date :NA
(62) Divisional to Application Number :NA
Filing Date :NA

(71)**Name of Applicant :**
1)NASP III/V GMBH
Address of Applicant :AM KNECHTACKER 19, 35041 MARBURG, GERMANY
(72)**Name of Inventor :**
1)BERNADETTE KUNERT

(57) Abstract :
The invention relates to a monolithic integrated semiconductor structure containing the following layer structure: A) a carrier layer based on doped or undoped Si, B) optionally a layer having the composition BxA1,GaZNtPv, wherein x = 0 - 0.1, y = 0 - 1, z = 0 - 1, t = 0 - 0.1 and v = 0.9 - 1, C) a relaxation layer having the composition BxA1,Gaz1n,P,Sbw, wherein x = 0 - 0.1, y = 0 - 1, z = 0 - 1 , u = 0 - 1 , v = 0 - 1 a n d w = 0 - 1 , wherein w and/or u is on the side facing toward layer A) or B) smaller than, equal to, or bigger than on the side facing away from layer A) or B) and wherein v = 1 - w and/or y = 1 - u - x - z, D) optionally a layer for blocking misfit dislocations and having the composition B,Al,- GazInuPvSbwNt, wherein x = 0 - 0.1, y = 0 - 1, z = 0 - 1 , u = O - 1 , v = O - 1 , w = O - 1 a n d t = O - 0.1, E) optionally a layer for hetero-offset having the composition BxA1,Ga,InuPVSbwNtAsr, wherein x = O - O . l , y = O - 1 , z = O - l , u = O - l , v = O - 1, w = 0 - 1, t = 0 - 0.1 and r = 0 - 1, and F) an arbitrary, preferably group I I I V semiconductor material, or a combination of several different arbitrary semiconductor materials, wherein the sum of the above stoichiometric indices for all group I11 elements is always 1 and wherein the sum of the above stoichiometric indices for all group V elements is also always 1.

No. of Pages : 32 No. of Claims : 23

(12) PATENT APPLICATION PUBLICATION
(19) INDIA
(22) Date of filing of Application :11/10/2013
(21) Application No.8894/DELNP/2013 A
(43) Publication Date : 19/12/2014

(54) Title of the invention : A DRY WASHABLE AND REUSABLE SURFACE CLEANING SUBSTRATE LOADED WITH CLEANING COMPOSITION

(51) International classification :A47L1/15,C11D17/04,C11D3/22
(31) Priority Document No :1104798.2
(32) Priority Date :22/03/2011
(33) Name of priority country :U.K.
(86) International Application No :PCT/EP2012/055121
Filing Date :22/03/2012
(87) International Publication No :WO 2012/127000
(61) Patent of Addition to Application Number :NA
Filing Date :NA
(62) Divisional to Application Number :NA
Filing Date :NA

(71)**Name of Applicant :**
1)AVET AG
Address of Applicant :Eichwiesstr. 9 CH 8630 R¼ti Z¼rich Switzerland
(72)**Name of Inventor :**
1)SACKS Roland

(57) Abstract :
The present invention is a surface cleaning substrate which is essentially dry and loaded with a cleaning composition which may very suitably be stored and transported in its dry form and which may be activated for surface cleaning by simple addition of a carrier such as water. The present invention is further a method for the manufacture of such a loaded dry substrate and to the method of surface cleaning using such a loaded dry substrate.

No. of Pages : 27 No. of Claims : 14

(12) PATENT APPLICATION PUBLICATION
(19) INDIA
(22) Date of filing of Application :14/10/2013
(21) Application No.8897/DELNP/2013 A
(43) Publication Date : 19/12/2014

(54) Title of the invention : SINGLE AND TWIN SCREW EXTRUDERS WITH ULTRASOUND HORNS FOR DECROSSLINKING AND DEVULCANIZATION

(51) International classification :B29C47/00
(31) Priority Document No :61/475702
(32) Priority Date :15/04/2011
(33) Name of priority country :U.S.A.
(86) International Application No :PCT/US2012/033751
Filing Date :16/04/2012
(87) International Publication No :WO 2012/142562
(61) Patent of Addition to Application Number :NA
Filing Date :NA
(62) Divisional to Application Number :NA
Filing Date :NA

(71)**Name of Applicant :**
1)THE UNIVERSITY OF AKRON
Address of Applicant :302 E. Buchtel Common Akron Ohio 44325 U.S.A.
(72)**Name of Inventor :**
1)ISAYEV Avraam

(57) Abstract :
Processes for decrosslinking crosslinked plastic and devulcanizing vulcanized rubber include advancing such materials through single screw or twin screw extruders including special ultrasonic treatment zones wherein threadless shaft (single screw) or shafts (twin screw) rotate under an ultrasonic horn having a distal end aligned with the shaft or shafts and being shaped complimentary thereto. Special arcuate (single screw) or double arcuate ultrasonic treatment flow paths confine the materials to flow under the horn where the material is subjected to ultrasonic waves to decrosslink the material in the case of crosslinked plastic or devulcanize the material in the case of vulcanized rubber with the extrudate leaving the die as a continuous stream or rope as is typical of virgin plastic or rubber.

No. of Pages : 37 No. of Claims : 17

(12) PATENT APPLICATION PUBLICATION
(19) INDIA
(22) Date of filing of Application :14/10/2013
(21) Application No.8898/DELNP/2013 A
(43) Publication Date : 19/12/2014

(54) Title of the invention : SPRAY DRIED CATALYST COMPOSITIONS AND POLYMERIZATION PROCESSES EMPLOYING THE SAME

(51) International classification :C08F10/00
(31) Priority Document No :61/485724
(32) Priority Date :13/05/2011
(33) Name of priority country :U.S.A.
(86) International Application No :PCT/US2012/030805
Filing Date :28/03/2012
(87) International Publication No :WO 2012/158260
(61) Patent of Addition to Application Number :NA
Filing Date :NA
(62) Divisional to Application Number :NA
Filing Date :NA

(71)**Name of Applicant :**
1)UNIVATION TECHNOLOGIES LLC
Address of Applicant :5555 San Felipe Suite 1950 Houston TX 77056 U.S.A.
(72)**Name of Inventor :**
1)MARIOTT Wesley R.
2)CAO Phuong A.
3)ZILKER Daniel P.
4)OSKAM John H.
5)MURE Cliff R.

(57) Abstract :
Spray-dried catalyst compositions comprising a transition metal complex and polymerization processes employing the same are disclosed herein. An embodiment provides a spray-dried catalyst composition comprising a transition metal catalyst component represented by the following formula: (I) and polymerization process employing the same.

No. of Pages : 46 No. of Claims : 20

(12) PATENT APPLICATION PUBLICATION
(19) INDIA
(22) Date of filing of Application :15/10/2013
(21) Application No.8949/DELNP/2013 A
(43) Publication Date : 19/12/2014

(54) Title of the invention : PRODUCTION OF CAPROLACTAM FROM CARBOHYDRATE CONTAINING MATERIALS

(51) International classification :C07D223/10,C07C233/47
(31) Priority Document No :61/475177
(32) Priority Date :13/04/2011
(33) Name of priority country :U.S.A.
(86) International Application No :PCT/US2012/031284
Filing Date :29/03/2012
(87) International Publication No :WO 2012/141915
(61) Patent of Addition to Application Number :NA
Filing Date :NA
(62) Divisional to Application Number :NA
Filing Date :NA

(71)**Name of Applicant :**
1)RENNOVIA INC.
Address of Applicant :1080 Hamilton Avenue Menlo Park CA 94025 U.S.A.
(72)**Name of Inventor :**
1)MURPHY Vincent J.
2)DIAS Eric L.
3)SHOEMAKER James A.W.
4)BOUSSIE Thomas R.
5)FRESCO Zachary M.

(57) Abstract :
The present invention generally relates to processes for the conversion of glucose to caprolactam employing chemocatalytic oxidation and reduction reactions. The present invention also includes processes for the conversion of glucose to caprolactam via amido polyhydroxy acid products and amidocaproic acid or derivatives thereof. The present invention also includes processes that catalytically oxidize an amidopolyol to amidopolyhydroxy acid or derivatives thereof and processes that catalytically hydrodeoxygenate amino or amido polyhydroxy acid or derivatives thereof to an amino or amidocaproic acid product. The amino or amidocaproic acid product may then be converted to caprolactam. The present invention also includes products produced by such processes and products producable from such products.

No. of Pages : 49 No. of Claims : 93

(12) PATENT APPLICATION PUBLICATION
(19) INDIA
(22) Date of filing of Application :15/10/2013
(21) Application No.8950/DELNP/2013 A
(43) Publication Date : 19/12/2014

(54) Title of the invention : PROCESS FOR THE MANUFACTURE OF DIHALODIPHENYLSULFONES STARTING FROM ORGANIC ACIDS

(51) International classification :C07C315/00
(31) Priority Document No :61/476413
(32) Priority Date :18/04/2011
(33) Name of priority country :U.S.A.
(86) International Application No :PCT/EP2012/056611
Filing Date :12/04/2012
(87) International Publication No :WO 2012/143279
(61) Patent of Addition to Application Number :NA
Filing Date :NA
(62) Divisional to Application Number :NA
Filing Date :NA

(71)**Name of Applicant :**
1)SOLVAY SPECIALTY POLYMERS USA LLC
Address of Applicant :4500 McGinnis Ferry Road Alpharetta GA 30005 3914 U.S.A.
(72)**Name of Inventor :**
1)LOUIS Chantal

(57) Abstract :
A process for the preparation of dihalodiphenylsulfones_such as 4,4-dichlorodiphenyl sulfone or 4,4-bis-(4-chlorophenylsulfonyl)biphenyl with high regio selectivity, at low temperature and in the absence of toxic reagents by reacting togeth er at least one acid, sulfur trioxide and at least one halobenzene. The invented process is particularly suited for the manufacture of 4,4-dichlorodiphenyl sulfone.

No. of Pages : 23 No. of Claims : 14

(12) PATENT APPLICATION PUBLICATION
(19) INDIA
(22) Date of filing of Application :14/10/2013
(21) Application No.8919/DELNP/2013 A
(43) Publication Date : 19/12/2014

(54) Title of the invention : MODULAR MULTI SEGMENT TRAY CARRYING ELEMENT AND MODULAR TRAY INSERT

(51) International classification :A24C5/358
(31) Priority Document No :P.394611
(32) Priority Date :19/04/2011
(33) Name of priority country :Poland
(86) International Application No :PCT/PL2012/050009
Filing Date :16/04/2012
(87) International Publication No :WO 2012/144914
(61) Patent of Addition to Application Number :NA
Filing Date :NA
(62) Divisional to Application Number :NA
Filing Date :NA

(71)**Name of Applicant :**
1)INTERNATIONAL TOBACCO MACHINERY POLAND SP. Z O.O.
Address of Applicant :Warsztatowa 19A PL 26 600 Radom Poland
(72)**Name of Inventor :**
1)ZAGAJSKA Katarzyna
2)GIELNIEWSKI Adam
3)OWCZAREK Radoslaw

(57) Abstract :
The object of the application is a modular multi-segment tray (101) for use in the tobacco industry for conveying rod-shaped articles, characterized in that it comprises a carrying element (102), a multi-segment insert (103) and fastening means (112, 113, 114) adapted to join the carrying element (102) and the multi-segment insert (103), as well as a multi-segment insert and a carrying element for such tray.

No. of Pages : 25 No. of Claims : 15

(12) PATENT APPLICATION PUBLICATION
(19) INDIA
(22) Date of filing of Application :15/10/2013
(21) Application No.8953/DELNP/2013 A
(43) Publication Date : 19/12/2014

(54) Title of the invention : PROCESS FOR CONVERTING A SOLID BIOMASS MATERIAL

(51) International classification :C10G3/00,C10G11/18,B01J8/18
(31) Priority Document No :11163542.1
(32) Priority Date :21/04/2011
(33) Name of priority country :EPO
(86) International Application No :PCT/EP2012/057369
Filing Date :23/04/2012
(87) International Publication No:WO 2012/143550
(61) Patent of Addition to Application Number :NA
Filing Date :NA
(62) Divisional to Application Number :NA
Filing Date :NA

(71)**Name of Applicant :**
1)SHELL INTERNATIONALE RESEARCH MAATSCHAPPIJ B.V.
Address of Applicant :Carel van Bylandtlaan 30 NL 2596 HR The Hague Netherlands
(72)**Name of Inventor :**
1)BOON Andries Quirin Maria
2)GOSSELINK Johan Willem
3)HARRIS John William
4)JANSSEN Andries Hendrik
5)VAN PAASEN Sander
6)SCHAVERIEN Colin John
7)WAY Nicolaas Wilhelmus Joseph

(57) Abstract :
A process for converting a solid biomass material comprising a) contacting the solid biomass material and a fluid hydrocarbon feed with a catalytic cracking catalyst at a temperature of more than 400°C in a catalytic cracking reactor to produce one or more cracked products; b) fractionating one or more cracked product(s) produced in step a) to produce one or more product fractions; c) hydrodeoxygenating one or more product fractions(s) produced in step b) to produce one or more hydrodeoxygenated products.

No. of Pages : 69 No. of Claims : 14

(12) PATENT APPLICATION PUBLICATION
(19) INDIA
(22) Date of filing of Application :15/10/2013
(21) Application No.8954/DELNP/2013 A
(43) Publication Date : 19/12/2014

(54) Title of the invention : PROCESS FOR CONVERTING A SOLID BIOMASS MATERIAL

(51) International classification :C10G3/00,C10G11/18,B01J8/18
(31) Priority Document No :11163475.4
(32) Priority Date :21/04/2011
(33) Name of priority country :EPO
(86) International Application No :PCT/EP2012/057371
Filing Date :23/04/2012
(87) International Publication No:WO 2012/143551
(61) Patent of Addition to Application Number :NA
Filing Date :NA
(62) Divisional to Application Number :NA
Filing Date :NA

(71)**Name of Applicant :**
1)SHELL INTERNATIONALE RESEARCH MAATSCHAPPIJ B.V.
Address of Applicant :Carel van Bylandtlaan 30 NL 2596 HR The Hague Netherlands
(72)**Name of Inventor :**
1)BOON Andries Quirin Maria
2)GOSSELINK Johan Willem
3)HARRIS John William
4)JANSSEN Andries Hendrik
5)VAN PAASEN Sander
6)SCHAVERIEN Colin John
7)WAY Nicolaas Wilhelmus Joseph

(57) Abstract :
A process for converting a solid biomass material comprising contacting the solid biomass material and a fluid hydrocarbon feed with a catalytic cracking catalyst at a temperature of more than 400°C in a riser reactor to produce one or more cracked products wherein the solid biomass material is supplied to the riser reactor at a location upstream of the location where the fluid hydrocarbon feed is supplied to the riser reactor.

No. of Pages : 45 No. of Claims : 15

(12) PATENT APPLICATION PUBLICATION
(19) INDIA
(22) Date of filing of Application :15/10/2013
(21) Application No.8955/DELNP/2013 A
(43) Publication Date : 19/12/2014

(54) Title of the invention : GAS MIST INHALER

(51) International classification :A61M11/02
(31) Priority Document No :2011242314
(32) Priority Date :04/11/2011
(33) Name of priority country :Japan
(86) International Application No :PCT/JP2012/078310
Filing Date :01/11/2012
(87) International Publication No :WO 2013/065776
(61) Patent of Addition to Application Number :NA
Filing Date :NA
(62) Divisional to Application Number :NA
Filing Date :NA

(71)**Name of Applicant :**
1)ACP JAPAN CO. LTD.
Address of Applicant :27 3 Hongo 2 chome Bunkyo ku Tokyo 1130033 Japan
(72)**Name of Inventor :**
1)NAKAMURA Shoichi

(57) Abstract :
A gas mist inhaler, which integrates a gas introduction part for increasing the supply pressure of a gas mist with a gas mist generator and enables the structure to be simplified and costs to be reduced, is provided. The gas mist inhaler is provided with a gas supply means (10), a gas mistgenerating means (30), and an inhalation member (50). The gas mist generating means (30) i s provided with, in an integrally formed manner: a connection part that connects to the gas supply means (10); a branched part that forces the gas flow from the connection part to branch off; a liquid storage part; a nozzle that discharges one of the gas flows that branched off at the branched part; a liquid- suctioning tube that transfers the liquid to the nozzle tip; a collision member that generates a gas mist by causing the liquid blown upwards b y the gas flow discharged by the nozzle to collide; a merging part that merges the gas fixim above with the gas mist that was generated; a gas introduction part that guides the other gas that branched off at the branched part to the merging part; and a gas mist discharge part that collects and dis charges the gas mist and gas that were generated.

No. of Pages : 30 No. of Claims : 14

(12) PATENT APPLICATION PUBLICATION
(19) INDIA
(22) Date of filing of Application :15/10/2013
(21) Application No.8956/DELNP/2013 A
(43) Publication Date : 19/12/2014

(54) Title of the invention : HERBICIDAL COMPOSITIONS

(51) International classification :A01N25/32,A01N33/22,A01N37/48
(31) Priority Document No :1109239.2
(32) Priority Date :01/06/2011
(33) Name of priority country :U.K.
(86) International Application No :PCT/EP2012/060234
Filing Date :31/05/2012
(87) International Publication No :WO 2012/164012
(61) Patent of Addition to Application Number :NA
Filing Date :NA
(62) Divisional to Application Number :NA
Filing Date :NA

(71)**Name of Applicant :**
1)SYNGENTA PARTICIPATIONS AG
Address of Applicant :Schwarzwaldallee 215 CH 4058 Basel Switzerland
(72)**Name of Inventor :**
1)MICHEL Albrecht

(57) Abstract :
The present invention provides, inter alia, a herbicidal composition comprising: (i) a protoporphyrinogen oxidase in hibiting herbicide selected from the group consisting flumioxazin, sulfentrazone, butafenacil and a diphenyl ether selected from the group consisting of aciiluorfen (including aciflurofen- sodium), fomesafen (including fomesafen-sodium), lactofen and oxyfluorfen; or an agronomically acceptable salt of said herbicide; and (ii) a safener of Formula (II) or an agronomically acceptable salt of said compound, wherein:- R is selected from the group consisting of halogen, nitro, C1-C4 alkyl, C1-C4 haloalkyl, C1-C4 haloalkoxy, C3-C6 , cycloalkyl, phenyl, C1-C4 alkoxy, cyano, C1-C4 alkylthio, C1-C4 alkylsulfinyl, C1-C4 alkylsulfonyl, C1-C4 alkoxycarbonyl and Ci-C4 alkylcarbonyl; and Rb and Rc are independently selected from the group consisting of hydrogen, C1-C6 alkyl, C3-C6 cycloalkyl, C3-Ct, alkenyl and C3-C6 alkynyl.

No. of Pages : 15 No. of Claims : 10

(12) PATENT APPLICATION PUBLICATION
(19) INDIA
(22) Date of filing of Application :11/10/2013
(21) Application No.8883/DELNP/2013 A
(43) Publication Date : 19/12/2014

(54) Title of the invention : COSMETIC COMPOSITION COMPRISING 4-(3-ETHOXY-4-HYDROXYPHENYL)-2-BUTANONE AND A LIPO- PHILIC SOLVENT

(51) International classification :A61K8/37,A61Q5/00
(31) Priority Document No :1152788
(32) Priority Date :01/04/2011
(33) Name of priority country :France
(86) International Application No :PCT/EP2012/055658
Filing Date :29/03/2012
(87) International Publication No :WO 2012/130954
(61) Patent of Addition to Application Number :NA
Filing Date :NA
(62) Divisional to Application Number :NA
Filing Date :NA

(71)**Name of Applicant :**
1)LOREAL
Address of Applicant :14 rue Royale F 75008 Paris France
(72)**Name of Inventor :**
1)CHEVALIER Vronique
2)OUATTARA Sofiane

(57) Abstract :
The invention relates to a composition comprising, in a physiologically acceptable oily medium, 4-(3-ethoxy-4-hydroxyphenyl)- 2-butanone and a solvent with solubility parameters in the Hansen solubility space such that $4.5 < \delta a < 7$ and $14 < \delta a < 22$. Use for caring for, making up and cleansing keratin materials.

No. of Pages : 15 No. of Claims : 9

(12) PATENT APPLICATION PUBLICATION
(19) INDIA
(22) Date of filing of Application :11/10/2013
(21) Application No.8884/DELNP/2013 A
(43) Publication Date : 19/12/2014

(54) Title of the invention : ELECTRIC MOTOR

(51) International classification :H02K23/04,H02K23/40
(31) Priority Document No :10 2011 075 197.1
(32) Priority Date :04/05/2011
(33) Name of priority country :Germany
(86) International Application No :PCT/EP2012/056795
Filing Date :13/04/2012
(87) International Publication No :WO 2012/150115
(61) Patent of Addition to Application Number :NA
Filing Date :NA
(62) Divisional to Application Number :NA
Filing Date :NA

(71)**Name of Applicant :**
1)ROBERT BOSCH GMBH
Address of Applicant :Postfach 30 02 20 70442 Stuttgart Germany
(72)**Name of Inventor :**
1)ROOS Gerald

(57) Abstract :
The invention relates to an electric motor (1), comprising: a stator arrangement (2) having an even number of stator poles arranged in the circumferential direction, which comprise permanent magnet stator poles (P) provided with one or more permanent magnets as well as consequent poles (4) in an arrangement of consequent poles; - a rotor (6) having an armature, which is arranged relative to the stator poles (P) in such a way that a surface directed to the stator poles (P) forms permanent magnet air gaps (7) with the permanent magnet stator poles and consequent pole air gaps (8) with the consequent poles (4), the width of the consequent pole air gaps (8) being greater than the width of the permanent magnet air gaps (7).

No. of Pages : 11 No. of Claims : 7

(12) PATENT APPLICATION PUBLICATION
(19) INDIA
(22) Date of filing of Application :11/10/2013
(21) Application No.8885/DELNP/2013 A
(43) Publication Date : 19/12/2014

(54) Title of the invention : SLIDING ELEMENT FOR LUBRICATED SLIDING SYSTEM

(51) International classification :C08L77/00,F16C33/20,C10M149/18
(31) Priority Document No :11164092.6
(32) Priority Date :28/04/2011
(33) Name of priority country :EPO
(86) International Application No :PCT/EP2011/073530
Filing Date :21/12/2011
(87) International Publication No :WO 2012/146325
(61) Patent of Addition to Application Number :NA
Filing Date :NA
(62) Divisional to Application Number :NA
Filing Date :NA

(71)**Name of Applicant :**
1)DSM IP ASSETS B.V.
Address of Applicant :Het Overloon 1 NL 6411 TE Heerlen Netherlands
(72)**Name of Inventor :**
1)PROOST Roy Antoine Hendrikus Wilhelmus
2)MEUWISSEN Michael Hubertus Helena
3)WANG Zhujuan

(57) Abstract :
The invention relates to a chain guide, respectively a chain tensioner for use in a lub ricated sliding system, comprising a surface layer or bearing or comprising a sliding element comprising a surface layer, the surface layer being mainly made of a polymeric material containing a matrix polymer and optionally other components dispersed in said matrix polymer, wherein the matrix polymer consists of a semi-crystalline polyamide (SCPA) having a tensile modulus at 140°C of at least 800 MPa (meas ured by the method according to ISO 527-1A). The invention also relates to a power train drive system comprising an engine, a transmission differential and a drive shaft system, a drive chain and a plastic com ponent comprising a sliding element in contact with the lubricated drive chain, wherein the chain guide, the chain tensioner, respectively the sliding element has a coefficient of friction (Co F), measured in lub rication oil at 140° C at a nominal contact pressure of 1 MPa and a speed of lm s, of at most 0.07.

No. of Pages : 18 No. of Claims : 14

(12) PATENT APPLICATION PUBLICATION
(19) INDIA
(22) Date of filing of Application :11/10/2013
(21) Application No.8886/DELNP/2013 A
(43) Publication Date : 19/12/2014

(54) Title of the invention : METHOD FOR DISINTEGRATING AN ELASTOMER AND DISINTEGRATOR

(51) International classification :B02C18/14,B26D1/38,B29B9/06
(31) Priority Document No :11168067.4
(32) Priority Date :30/05/2011
(33) Name of priority country :EPO
(86) International Application No :PCT/EP2012/060021
Filing Date :29/05/2012
(87) International Publication No :WO 2012/163904
(61) Patent of Addition to Application Number :NA
Filing Date :NA
(62) Divisional to Application Number :NA
Filing Date :NA

(71)**Name of Applicant :**
1)LANXESS DEUTSCHLAND GMBH
Address of Applicant :LANXESS Tower LIP IPR 50569 Kln Germany
(72)**Name of Inventor :**
1)REIF Lothar
2)NEUNER Thomas
3)M„HNER WOLFARTH Christian
4)OBRECHT Werner

(57) Abstract :
The invention relates to a method for disintegrating an elastomer (20) wherein the elastomer (20) is moved across a floor (22) relative to a cutting tool (12) and toward the cutting tool (12) wherein the cutting tool (12) has a cutting wedge (14) which has a cutting edge (30) and a rake face (32) adjacent to the cutting edge (30). After the cutting wedge (14) comes in contact with the elastomer (20) the elastomer (20) is first at least partially compressed only by the rake face (32) between the rake face (32) and the floor (22) before the cutting edge (30) cuts through the elastomer (20). Because of the initially planar compression of the elastomer (20) by means of the rake face (32) an elastic evasive movement of the elastomer (20) is avoided such that it is possible to cut off significantly thinner pieces from the elastomer (20) and thus the specific surface area of the pieces severed from the elastomer (20) can be increased.

No. of Pages : 24 No. of Claims : 12

(12) PATENT APPLICATION PUBLICATION
(19) INDIA
(22) Date of filing of Application :15/10/2013
(21) Application No.8940/DELNP/2013 A
(43) Publication Date : 19/12/2014

(54) Title of the invention : COMPOSITION THAT CAN BE SCREEN PRINTED ONTO POLYVINYL BUTYRAL

(51) International classification :C09D11/02,C08J5/18,C09D11/10
(31) Priority Document No :1153189
(32) Priority Date :12/04/2011
(33) Name of priority country :France
(86) International Application No :PCT/FR2012/050785
Filing Date :11/04/2012
(87) International Publication No :WO 2012/140362
(61) Patent of Addition to Application Number :NA
Filing Date :NA
(62) Divisional to Application Number :NA
Filing Date :NA

(71)**Name of Applicant :**
1)SAINT GOBAIN GLASS FRANCE
Address of Applicant :18 avenue dAlsace F 92400 Courbevoie France
(72)**Name of Inventor :**
1)WERY Sbastien
2)DUCOURTHIAL Elodie
3)DEBRAINE Anglique
4)BARBIER Beno®t
5)DUCLAUX Virginie

(57) Abstract :
The invention relates to a composition suitable for the black printing by screen printing of a sheet of polyvinyl butyral intended to be part of a laminated glazing unit characterized in that it comprises 11 to 13% by weight of polyvinyl butyral 35 to 40% by weight of at least one diester of an aliphatic carboxylic diacid and at least one black pigment in an amount and having a specific surface area that are selected so that the Brookfield viscosity at 20°C of the composition is between 9 and 13 Pa.s; a process for printing by screen printing a sheet of polyvinyl butyral intended to be part of a laminated glazing unit using this composition; a sheet of polyvinyl butyral intended to be part of a laminated glazing unit and that is printed by screen printing using this composition; and a laminated glazing unit comprising such a sheet of polyvinyl butyral.

No. of Pages : 13 No. of Claims : 12

(12) PATENT APPLICATION PUBLICATION
(19) INDIA
(22) Date of filing of Application :15/10/2013
(21) Application No.8941/DELNP/2013 A
(43) Publication Date : 19/12/2014

(54) Title of the invention : AN APPARATUS AND METHOD OF SUPPORTING AND POWERING A MONITOR MOUNTED TO A MULTI FLOOR PIPE APPARATUS

(51) International classification :A62C31/24,A62C31/28
(31) Priority Document No :61/454803
(32) Priority Date :21/03/2011
(33) Name of priority country :U.S.A.
(86) International Application No :PCT/US2012/029759
Filing Date :20/03/2012
(87) International Publication No :WO 2012/129204
(61) Patent of Addition to Application Number :NA
Filing Date :NA
(62) Divisional to Application Number :NA
Filing Date :NA

(71)**Name of Applicant :**
1)ELKHART BRASS MANUFACTURING COMPANY INC.
Address of Applicant :1302 West Beardsley Elkhart IN 46515 U.S.A.
(72)**Name of Inventor :**
1)BOLLINGER Steve
2)McDOWELL Curt
3)BEHENNA Bruce

(57) Abstract :
A system for use in a multi story building is provided. The system may include a pipe apparatus having an inlet and an outlet. The inlet is coupled to a supply of fluid and the outlet directs the fluid. The system may include a frame assembly for supporting the pipe apparatus and enabling the inlet of the pipe apparatus to couple to the supply of fluid at a first floor of the building and enabling the outlet to deliver fluid to a higher floor of the building relative to the first floor. The system may include an electrically controlled fluid delivery device mounted at said outlet and in fluid communication with the pipe apparatus. The system may include a power supply having a power source located remotely from said electrically controlled fluid delivery device and supported by the frame assembly.

No. of Pages : 27 No. of Claims : 25

(12) PATENT APPLICATION PUBLICATION
(19) INDIA
(22) Date of filing of Application :15/10/2013
(21) Application No.8942/DELNP/2013 A
(43) Publication Date : 19/12/2014

(54) Title of the invention : PHARMACEUTICAL COMPOSITIONS CONTAINING PACLITAXEL OROTATE

(51) International classification :C07D405/12
(31) Priority Document No :13/066793
(32) Priority Date :25/04/2011
(33) Name of priority country :U.S.A.
(86) International Application No :PCT/US2012/000217
Filing Date :23/04/2012
(87) International Publication No :WO 2012/148494
(61) Patent of Addition to Application Number :NA
Filing Date :NA
(62) Divisional to Application Number :NA
Filing Date :NA

(71)**Name of Applicant :**
1)SAVVIPHARM INC
Address of Applicant :99 Wall Street 23rd Floor New York NY 10005 U.S.A.
(72)**Name of Inventor :**
1)KARMALI Rashida A.

(57) Abstract :
This invention is related to orotic acid compounds of taxane cytotoxic agents and in particular to the conversion of the taxanes to their orotate esters. More particularly the pharmaceutical compositions of paclitaxel orotate and docetaxel orotate provide a strategy to minimize body weight loss during primary chemotherapy and improve patient outcomes and quality of life.

No. of Pages : 23 No. of Claims : 2

(12) PATENT APPLICATION PUBLICATION
(19) INDIA
(22) Date of filing of Application :15/10/2013
(21) Application No.8943/DELNP/2013 A
(43) Publication Date : 19/12/2014

(54) Title of the invention : THE TREATMENT OF VIRAL INFECTIONS

(51) International classification :A61K9/00,A61K31/00
(31) Priority Document No :2011/02483
(32) Priority Date :04/04/2011
(33) Name of priority country :South Africa
(86) International Application No :PCT/IB2012/051483
Filing Date :28/03/2012
(87) International Publication No :WO 2012/137106
(61) Patent of Addition to Application Number :NA
Filing Date :NA
(62) Divisional to Application Number :NA
Filing Date :NA

(71)**Name of Applicant :**
1)ENVIRON SKIN CARE (PTY) LTD
Address of Applicant :Unit G11 Access Park Doncaster Road Kenilworth 7708 Cape Town South Africa
(72)**Name of Inventor :**
1)FERNANDES Desmond Brian
2)ELLWOOD Pamela Lee

(57) Abstract :
The invention provides low concentration stable compositions for the treatment of lesions associated with herpes viral infections. The compositions are in a form selected from creams and gels containing trichloroacetic acid in an amount of between 2.5 % (m/m) and 6% (w/w) of the weight of the cream or gel. Preferably the cream contains about 5% and the gel about 2 5% of the trichloroacetic acid.

No. of Pages : 14 No. of Claims : 12

(12) PATENT APPLICATION PUBLICATION
(19) INDIA
(22) Date of filing of Application :15/10/2013
(21) Application No.8944/DELNP/2013 A
(43) Publication Date : 19/12/2014

(54) Title of the invention : BEADLETS COMPRISING CAROTENOIDS

(51) International classification :A23L1/275,A23L1/30,A61K9/16
(31) Priority Document No :00706/11
(32) Priority Date :20/04/2011
(33) Name of priority country :Switzerland
(86) International Application No :PCT/EP2012/057238
Filing Date :20/04/2012
(87) International Publication No :WO 2012/143492
(61) Patent of Addition to Application Number :NA
Filing Date :NA
(62) Divisional to Application Number :NA
Filing Date :NA

(71)**Name of Applicant :**
1)DSM IP Assets B.V.
Address of Applicant :Het Overloon 1 NL 6411 The Heerlen Netherlands
(72)**Name of Inventor :**
1)SCHLEGEL Bernd
2)BADOLATO B–NISCH Gabriela

(57) Abstract :
The present invention relates to beadlets comprising at least one carotenoid and matrix material which comprise wax(es) and/or fat(s) with a drop point of between 30 to 85 °C as well as to the production of such beadlets and to the use of such beadlets in compositions.

No. of Pages : 20 No. of Claims : 21

(12) PATENT APPLICATION PUBLICATION
(19) INDIA
(22) Date of filing of Application :14/10/2013
(21) Application No.8913/DELNP/2013 A
(43) Publication Date : 19/12/2014

(54) Title of the invention : COMPOSITIONS COMPRISING A GLUCOSE ANTI METABOLITE AND SELENIUM

(51) International classification :A23K1/16,A23K1/175,A23K1/18
(31) Priority Document No :13/098741
(32) Priority Date :02/05/2011
(33) Name of priority country :U.S.A.
(86) International Application No :PCT/US2012/036035
Filing Date :02/05/2012
(87) International Publication No :WO 2012/151227
(61) Patent of Addition to Application Number :NA
Filing Date :NA
(62) Divisional to Application Number :NA
Filing Date :NA

(71)**Name of Applicant :**
1)THE IAMS COMPANY
Address of Applicant :One Procter & Gamble Plaza Cincinnati Ohio 45202 U.S.A.
(72)**Name of Inventor :**
1)LUHADIYA Ashok Premchand
2)DAVENPORT Gary Mitchell
3)ZHANG Jin
4)INGRAM Donald Keith
5)ROTH George S.
6)SHOVELLER Anna Katharine
7)FLICKINGER Elizabeth Anne

(57) Abstract :
A composition including a glucose anti metabolite and selenium. The composition can be for a companion animal. The composition can include added selenium and endogenous selenium. The composition can be a nutritionally balanced pet food composition.

No. of Pages : 25 No. of Claims : 13

(12) PATENT APPLICATION PUBLICATION
(19) INDIA
(22) Date of filing of Application :14/10/2013
(21) Application No.8915/DELNP/2013 A
(43) Publication Date : 19/12/2014

(54) Title of the invention : METHOD FOR REDUCING FLU LIKE SYMPTOMS ASSOCIATED WITH INTRAMUSCULAR ADMINISTRATION OF INTERFERON USING A FAST TITRATION ESCALATING DOSING REGIMEN

(51) International classification :A61K38/21,A61M5/00,A61P25/28
(31) Priority Document No :61/452807
(32) Priority Date :15/03/2011
(33) Name of priority country :U.S.A.
(86) International Application No :PCT/US2012/029201
Filing Date :15/03/2012
(87) International Publication No :WO 2012/125809
(61) Patent of Addition to Application Number :NA
Filing Date :NA
(62) Divisional to Application Number :NA
Filing Date :NA

(71)**Name of Applicant :**
1)BIOGEN IDEC INC.
Address of Applicant :14 Cambridge Center Cambridge MA 02142 U.S.A.
(72)**Name of Inventor :**
1)DEYKIN Aaron

(57) Abstract :
The present invention provides a method for treating multiple sclerosis (MS), and for reducing flu-like symptoms associated with administration of an interferon to a patient with MS. The method involves intramuscularly administering the interferon to the MS patient according to an escalating dosing regimen in weeks 1 to 3, and a full therapeutically effective dose of interferon in week 4. In one embodiment of the invention, the escalating dosing regimen comprises administering one quarter of the therapeutically effective dose in week 1, half of the therapeutically effective dose in week 2, and three-quarters of the therapeutically effective dose in week 3. Also provided are titration packages for enabling compliance with a regimen of changing dosage of an interferon over a period of time.

No. of Pages : 45 No. of Claims : 31

(12) PATENT APPLICATION PUBLICATION
(19) INDIA
(22) Date of filing of Application :17/10/2013
(21) Application No.8970/DELNP/2013 A
(43) Publication Date : 19/12/2014

(54) Title of the invention : STEAM PLASMA ARC HYDROLYSIS OF OZONE DEPLETING SUBSTANCES

(51) International classification :B01J19/08,A62D3/19,H05H1/24
(31) Priority Document No :61/454368
(32) Priority Date :18/03/2011
(33) Name of priority country :U.S.A.
(86) International Application No :PCT/CA2012/000305
Filing Date :19/03/2012
(87) International Publication No :WO 2012/126101
(61) Patent of Addition to Application Number :NA
Filing Date :NA
(62) Divisional to Application Number :NA
Filing Date :NA

(71)**Name of Applicant :**
1)PYROGENESIS CANADA INC.
Address of Applicant :2000 rue William Montreal Quebec H3J 1R4 Canada
(72)**Name of Inventor :**
1)CARABIN Pierre
2)RAO Lakshminarayana Myadala Prahlada

(57) Abstract :
A two step process for the destruction of a precursor material using a steam plasma in a three zone reactor wherein the precursor material is hydrolyzed as a first step in the high temperature zone of the reactor followed by a second step of medium temperature oxidation of the reactant stream in the combustion zone of the reactor where combustion oxygen or air is injected and immediate quenching of the resulting gas stream to avoid the formation of unwanted by products. A related apparatus includes a non transferred direct current steam plasma torch an externally cooled three zone steam plasma reactor means for introducing the precursor material into the plasma plume of the plasma torch means for introducing the combustion air or oxygen into the combustion zone means for exiting the reactant mixture from the reactor and means for quenching the reactant mixture located at the exit end of the reactor.

No. of Pages : 28 No. of Claims : 29

(12) PATENT APPLICATION PUBLICATION
(19) INDIA
(22) Date of filing of Application :17/10/2013
(21) Application No.8971/DELNP/2013 A
(43) Publication Date : 19/12/2014

(54) Title of the invention : METHODS AND COMPOSITIONS SUITABLE FOR PREVENTING AND TREATING HYPERLEPTINEMIA

(51) International classification :A01N65/00,A61K36/00
(31) Priority Document No :61/517464
(32) Priority Date :20/04/2011
(33) Name of priority country :U.S.A.
(86) International Application No :PCT/US2012/033873
Filing Date :17/04/2012
(87) International Publication No :WO 2012/145281
(61) Patent of Addition to Application Number :NA
Filing Date :NA
(62) Divisional to Application Number :NA
Filing Date :NA

(71)**Name of Applicant :**
1)NESTEC S.A.
Address of Applicant :Avenue Nestle 55 CH 1800 Vevey Switzerland
(72)**Name of Inventor :**
1)PAN Yuanlong
2)MIDDLETON Rondo Paul

(57) Abstract :
The invention provides methods and compositions suitable for preventing and treating hyperleptinemia preventing and treating insulin resistance preventing and treating cardiovascular disease preventing and treating obesity preventing and treating hyperlipidemia and preventing and treating hypertension in an animal. The methods comprise administering one or more isoflavones to the animal preferably in amounts of from about 0.001 to about 10 g/kg/day.

No. of Pages : 26 No. of Claims : 98

(12) PATENT APPLICATION PUBLICATION
(19) INDIA
(22) Date of filing of Application :17/10/2013
(21) Application No.8972/DELNP/2013 A
(43) Publication Date : 19/12/2014

(54) Title of the invention : NUTRITIONAL COMPOSITIONS HAVING ALPHA HICA AND ALPHA KETOGLUTARATE

(51) International classification :A23L1/30,A61K31/19
(31) Priority Document No :61/476345
(32) Priority Date :18/04/2011
(33) Name of priority country :U.S.A.
(86) International Application No :PCT/EP2012/057095
Filing Date :18/04/2012
(87) International Publication No :WO 2012/143405
(61) Patent of Addition to Application Number :NA
Filing Date :NA
(62) Divisional to Application Number :NA
Filing Date :NA

(71)**Name of Applicant :**
1)NESTEC S.A.
Address of Applicant :Av. Nestl 55 CH 1800 Vevey Switzerland
(72)**Name of Inventor :**
1)GREENBERG Norman Alan
2)BREUILLE Denis
3)ROUGHEAD Zamzam Kabiry (Fariba)
4)BOLSTER Doug
5)MAGER Jennifer

(57) Abstract :
Nutritional compositions for maximizing muscle protein synthesis while minimizing the catabolism of muscle proteins and methods of using same are provided. In this manner, the nutritional compositions may provide for retention of lean body mass, which helps to avoid loss of independence and functionality, as well as to improve quality of life especially in the elderly at risk of sarcopema and frailty. The nutritional compositions include a-hydroxyisocaproic acid and a-ketoglutarate. The composition may include other functional ingredients such as, but not limited to whey protein including whey protein micelles, prebiotic fibers, citrulline, eicosapentaenoic acid, L-carnitine, nucleotides, and amino acids. Methods of administering such nutritional products to individuals in need of same are also provided.

No. of Pages : 38 No. of Claims : 53

(12) PATENT APPLICATION PUBLICATION
(19) INDIA
(22) Date of filing of Application :14/10/2013
(21) Application No.8903/DELNP/2013 A
(43) Publication Date : 19/12/2014

(54) Title of the invention : VERY ABSORBENT THIN ADHESIVE DRESSING AND USES THEREOF FOR THE TREATMENT OF CHRONIC WOUNDS

(51) International classification :A61F13/02
(31) Priority Document No :1153327
(32) Priority Date :15/04/2011
(33) Name of priority country :France
(86) International Application No :PCT/FR2012/050812
Filing Date :13/04/2012
(87) International Publication No :WO 2012/140378
(61) Patent of Addition to Application Number :NA
Filing Date :NA
(62) Divisional to Application Number :NA
Filing Date :NA

(71)**Name of Applicant :**
1)LABORATOIRES URGO
Address of Applicant :42 rue de Longvic F 21300 Chenove France
2)SOCIETE DE DEVELOPPEMENT ET DE RECHERCHE INDUSTRIELLE
(72)**Name of Inventor :**
1)AUGUSTE Stphane
2)PERNOT Jean Marc
3)DANEROL Anne Sophie
4)CHARRE Aurlie

(57) Abstract :
The invention relates to an absorbent dressing comprising an adhesive silicone coated side strip which is particularly suitable for use in the care of chronic wounds such as ulcers or eschars or acute wounds such as burns. The absorbent dressing includes a breathable impermeable substrate (4) and an absorbent non woven fabric (6). The substrate is formed by assembling a continuous film (4a) and an openwork reinforcement that is coated with an adhesive silicone gel (4b) without blocking the openings in the reinforcement. A non absorbent web (5) is secured to a complementary non woven fabric (7) such as to encase the above mentioned absorbent non woven fabric (6) without being secured at any point to the latter. The encased absorbent non woven fabric is subsequently assembled to the substrate (4) along part of the said silicone coated surface of the substrate.

No. of Pages : 24 No. of Claims : 12

(12) PATENT APPLICATION PUBLICATION
(19) INDIA
(22) Date of filing of Application :14/10/2013
(21) Application No.8904/DELNP/2013 A
(43) Publication Date : 19/12/2014

(54) Title of the invention : SYSTEM AND METHOD FOR AUTOMATED RFID QUALITY CONTROL

(51) International classification :G06K19/07
(31) Priority Document No :13/093933
(32) Priority Date :26/04/2011
(33) Name of priority country :U.S.A.
(86) International Application No :PCT/US2012/033240
Filing Date :12/04/2012
(87) International Publication No :WO 2012/148686
(61) Patent of Addition to Application Number :NA
Filing Date :NA
(62) Divisional to Application Number :NA
Filing Date :NA

(71)**Name of Applicant :**
1)AVERY DENNISON CORPORATION
Address of Applicant :150 N. Orange Grove Blvd. Pasadena CA 91103 U.S.A.
(72)**Name of Inventor :**
1)MARCUS Chris
2)ARMIJO Edward A.

(57) Abstract :
A system and method is described for an automated RFID quality control process. The method may include configuring an RFID manufacturing press with quality control specifications manufacturing a batch of RFID inlays executing a performance test on each RFID inlay comparing the results of the performance test to the quality control specifications and determining a pass or fail status for the batch of RFID inlays based on the results of the performance test. The system may include an RFID manufacturing press having at least one lane at least one interrogator antenna and programmable control logic for the RFID manufacturing press wherein the programmable control logic is adapted to execute a performance test on each RFID relay of a batch of RFID relays output by the manufacturing press compare the results of the performance test to user configurable quality control specifications and determine whether the batch of RFID relays meets the specifications.

No. of Pages : 18 No. of Claims : 18

(12) PATENT APPLICATION PUBLICATION
(19) INDIA
(22) Date of filing of Application :14/10/2013
(21) Application No.8905/DELNP/2013 A
(43) Publication Date : 19/12/2014

(54) Title of the invention : VEHICLE TYRES WITH SIDE WALL PROTECTION

(51) International classification :B60C13/00
(31) Priority Document No :10 2011 051 921.1
(32) Priority Date :19/07/2011
(33) Name of priority country :Germany
(86) International Application No :PCT/EP2012/061282
Filing Date :14/06/2012
(87) International Publication No :WO 2013/010729
(61) Patent of Addition to Application Number :NA
Filing Date :NA
(62) Divisional to Application Number :NA
Filing Date :NA

(71)**Name of Applicant :**
1)CONTINENTAL REIFEN DEUTSCHLAND GMBH
Address of Applicant :Vahrenwalder Strae 9 30165 Hannover Germany
(72)**Name of Inventor :**
1)TKOCZ Tim
2)MOTA Floriano
3)RITTWEGER Stefan

(57) Abstract :
To provide a vehicle tyre in which the side wall is optimally protected from damage, it is proposed that at least one protective ring (2, 3) be formed like a ramp, the outside (13, 14) of the protective ring (2, 3) having a gradient from the upper part (10, 12) to the lower part (9, 11) of the protective ring (2, 3) facing towards the tread.

No. of Pages : 13 No. of Claims : 12

(12) PATENT APPLICATION PUBLICATION
(19) INDIA
(22) Date of filing of Application :14/10/2013
(21) Application No.8906/DELNP/2013 A
(43) Publication Date : 19/12/2014

(54) Title of the invention : HEAD UP DISPLAY DEVICE

(51) International classification :G02B27/01,B60K35/00,G02B27/02
(31) Priority Document No :2011067426
(32) Priority Date :25/03/2011
(33) Name of priority country:Japan
(86) International Application No :PCT/JP2012/053123
Filing Date :10/02/2012
(87) International Publication No :WO 2012/132579
(61) Patent of Addition to Application Number :NA
Filing Date :NA
(62) Divisional to Application Number :NA
Filing Date :NA

(71)**Name of Applicant :**
1)NIPPON SEIKI CO.LTD.
Address of Applicant :2 34Higashi zaoh 2 chomeNagaoka shi Niigata 9408580 Japan
(72)**Name of Inventor :**
1)MATSUURAKazuya
2)SAITOMaiko
3)HARUYAMAHiroteru

(57) Abstract :
The present invention provides a head up display device which can improve light irradiation efficiency toward an eye box suppress the amount of brightness change for a display image affected by the movement of the viewpoint and achieve desirable properties for the light distribution angle. An illumination optical system (111) of the head up display device has a light source (111a) for emitting a light beam (L0) a lens array (111c) for generating a plurality of images of the light source (111a) by dividing the light beam (L0) and a field lens (111d) for irradiating on a display member (113) at a given angle the light beam (L0) emitted from the image of the light source (111a) which is generated by the lens array (111c) wherein the lens array (111c) is arranged such that the imaging surface of the light source (111a) generated by the lens array (111c) is located on the side of the principal point of the field lens (111d) with respect to a focal point on the side of an object of the field lens (111d).

No. of Pages : 32 No. of Claims : 9

(12) PATENT APPLICATION PUBLICATION
(19) INDIA
(22) Date of filing of Application :07/10/2013
(21) Application No.8699/DELNP/2013 A
(43) Publication Date : 19/12/2014

(54) Title of the invention : FUSION OF BIOACTIVE MOLECULES

(51) International classification :A23J3/14,C12N9/16
(31) Priority Document No :11169295.0
(32) Priority Date :09/06/2011
(33) Name of priority country :EPO
(86) International Application No :PCT/EP2012/061003
Filing Date :11/06/2012
(87) International Publication No :WO 2012/168473
(61) Patent of Addition to Application Number :NA
Filing Date :NA
(62) Divisional to Application Number :NA
Filing Date :NA

(71)**Name of Applicant :**
1)NOVOZYMES A/S
Address of Applicant :Krogshoejvej 36 DK 2880 Bagsvaerd Denmark
(72)**Name of Inventor :**
1)SCHYNS Ghislain
2)DUVAL Stephane
3)BRELIN Aurelie

(57) Abstract :
Fusion proteins containing an enzyme preferably a feed or food enzyme coupled to a gut surface binding domain are presented. The fusion proteins can be used to promote feed utilization in animals. In a particular example a Fusion enzyme according to the invention comprising a gut surface binding polypeptide segment linked to a phytase show an increased resident time in the gut which leads to an increased amount of time given to the enzyme to catalyse the corresponding reaction which finally leads to improved feed utilisation.

No. of Pages : 65 No. of Claims : 14

(12) PATENT APPLICATION PUBLICATION
(19) INDIA
(22) Date of filing of Application :17/10/2013
(21) Application No.8974/DELNP/2013 A
(43) Publication Date : 19/12/2014

(54) Title of the invention : REFRACTORY OBJECT GLASS OVERFLOW FORMING BLOCK AND PROCESS OF FORMING AND USING THE REFRACTORY OBJECT

(51) International classification :C04B35/101,C21C5/44,G21F1/06
(31) Priority Document No :61/469502
(32) Priority Date :30/03/2011
(33) Name of priority country :U.S.A.
(86) International Application No :PCT/US2012/031689
Filing Date :30/03/2012
(87) International Publication No :WO 2012/135762
(61) Patent of Addition to Application Number :NA
Filing Date :NA
(62) Divisional to Application Number :NA
Filing Date :NA

(71)**Name of Applicant :**
1)SAINT GOBAIN CERAMICS & PLASTICS INC.
Address of Applicant :One New Bond Street US Worcester MA 01615 0138 U.S.A.
(72)**Name of Inventor :**
1)CITTI Olivier
2)KAZMIERCZAK Andrea

(57) Abstract :
A refractory object can include at least 10 wt% A120 . Further, the refractory object may contain less than approximately 6 wt% Si02 or may include a dopant that includes an oxide of Ti, Mg, Ta, Nb, or any combination thereof. In an embodiment, at least ap proximately 1% of the AI2O3 in the refractory object can be provided as reactive AI2O3. In another embodiment, the refractory object may have a density of at least approximately 3.55 g/cc, a corrosion rate of no greater than approximately 2.69 mm/year, or any combination of the foregoing. In a particular embodiment, the refractory object can be used to form an Al-Si-Mg glass sheet. In an embodiment, the re fractory object may be formed by a process using a compound of Ti, Mg, Ta, Nb, or any combination thereof.

No. of Pages : 38 No. of Claims : 34

(12) PATENT APPLICATION PUBLICATION
(19) INDIA
(22) Date of filing of Application :17/10/2013
(21) Application No.8977/DELNP/2013 A
(43) Publication Date : 19/12/2014

(54) Title of the invention : CORRUGATED ACOUSTICAL PANEL AND PRODUCTION METHOD

(51) International classification :E04B9/00,E04B9/04
(31) Priority Document No :13/079233
(32) Priority Date :04/04/2011
(33) Name of priority country :U.S.A.
(86) International Application No :PCT/US2012/029616
Filing Date :19/03/2012
(87) International Publication No :WO 2012/138466
(61) Patent of Addition to Application Number :NA
Filing Date :NA
(62) Divisional to Application Number :NA
Filing Date :NA

(71)**Name of Applicant :**
1)USG INTERIORS LLC
Address of Applicant :550 West Adams Street Chicago IL 60661 3676 U.S.A.
(72)**Name of Inventor :**
1)ENGLERT Mark
2)YU Qing C.

(57) Abstract :
An acoustical panel (209 useful as suspended ceiling tile comprising at least one corrugated layer or layers (21) and apertures (27) situated in said corrugated layer or layers (21). A method of production is also disclosed.

No. of Pages : 17 No. of Claims : 8

(12) PATENT APPLICATION PUBLICATION
(19) INDIA
(22) Date of filing of Application :17/10/2013
(21) Application No.8978/DELNP/2013 A
(43) Publication Date : 19/12/2014

(54) Title of the invention : MECHANICAL PROTECTION DEVICE

(51) International classification :F16D63/00,F16D65/14,F16H35/10
(31) Priority Document No :1153523
(32) Priority Date :22/04/2011
(33) Name of priority country :France
(86) International Application No :PCT/FR2012/050800
Filing Date :12/04/2012
(87) International Publication No :WO 2012/143656
(61) Patent of Addition to Application Number :NA
Filing Date :NA
(62) Divisional to Application Number :NA
Filing Date :NA

(71)**Name of Applicant :**
1)TURBOMECA
Address of Applicant :F 64510 Bordes France
(72)**Name of Inventor :**
1)DESCUBES Olivier Pierre
2)BEDRINE Olivier
3)LADEVEZE Isabelle Germaine Claude
4)PY Jean Michel Pierre Claude

(57) Abstract :
The invention relates to the field of mechanical protection devices comprising a transmission shaft (1) with a main axis of rotation (X) and an element (2) that can rupture in the event of a torsional overload and in particular to a mechanical protection device further comprising a mobile part (3) secured to the transmission shaft (1) in rotation about the main axis (X) and able to move radially outwards with respect to the main axis (X) from a first position to a second position a spring (4) for urging the mobile part (3) towards the first position and a tangential end stop (8) able to arrest the rotation of the mobile part (3) about the main axis (X) when the mobile part (3) is in the second position. The mobile part (3) and the spring (4) are calibrated so that once a predetermined triggering angular velocity has been reached the mobile part (3) moves from the first into the second position under the effect of a centrifugal force that is stronger than the preload of the spring (4).

No. of Pages : 21 No. of Claims : 10

(12) PATENT APPLICATION PUBLICATION
(19) INDIA
(22) Date of filing of Application :17/10/2013
(21) Application No.8979/DELNP/2013 A
(43) Publication Date : 19/12/2014

(54) Title of the invention : STABLE POVIDONE IODINE COMPOSITIONS WITH STEROIDS OR NON STEROIDAL ANTI INFLAMMATORIES

(51) International classification :A61K31/74
(31) Priority Document No :61/485475
(32) Priority Date :12/05/2011
(33) Name of priority country :U.S.A.
(86) International Application No :PCT/US2012/037563
Filing Date :11/05/2012
(87) International Publication No :WO 2012/155062
(61) Patent of Addition to Application Number :NA
Filing Date :NA
(62) Divisional to Application Number :NA
Filing Date :NA

(71)**Name of Applicant :**
1)FORESIGHT BIOTHERAPEUTICS INC.
Address of Applicant :50 W. 57th Street 15th Floor New York NY 10019 U.S.A.
(72)**Name of Inventor :**
1)STEIN Jason
2)WEISER Michael
3)CAPRIOTTI Joseph
4)LIANG Bo
5)SAMSON C. Michael

(57) Abstract :
Disclosed are stable compositions comprising povidone iodine and a steroid and methods of making and using such compositions. Also disclosed herein are stable compositions comprising povidone iodine and an NS AID and methods of making and using such compositions.

No. of Pages : 102 No. of Claims : 46

(12) PATENT APPLICATION PUBLICATION
(19) INDIA
(22) Date of filing of Application :17/10/2013
(21) Application No.8973/DELNP/2013 A
(43) Publication Date : 19/12/2014

(54) Title of the invention : CERAMIC PARTICLE AND PROCESS FOR MAKING THE SAME

(51) International classification :C04B35/622,C04B35/64,C09K8/60
(31) Priority Document No :61/468773
(32) Priority Date :29/03/2011
(33) Name of priority country :U.S.A.
(86) International Application No :PCT/US2012/030539
Filing Date :26/03/2012
(87) International Publication No :WO 2012/135106
(61) Patent of Addition to Application Number :NA
Filing Date :NA
(62) Divisional to Application Number :NA
Filing Date :NA

(71)**Name of Applicant :**
1)SAINT GOBAIN CERAMICS & PLASTICS INC.
Address of Applicant :One New Bond Street P O Box 15138 Worcester Massachusetts 01615 0138 U.S.A.
(72)**Name of Inventor :**
1)FUSS Tihana
2)SAN MIGUEL Laurie
3)DICKSON Kevin R.
4)STEPHENS Walter T.

(57) Abstract :
A ceramic particle with at least two microstructural phases comprising an amorphous phase representing between 30 volume percent and 70 volume percent of the particle, and a first substantially crystalline phase comprising a plurality of predominately crystalline regions distributed through the amorphous phase is disclosed. A process for making the ceramic particle is also disclosed.

No. of Pages : 17 No. of Claims : 25

(12) PATENT APPLICATION PUBLICATION
(19) INDIA
(22) Date of filing of Application :17/10/2013
(21) Application No.8989/DELNP/2013 A
(43) Publication Date : 19/12/2014

(54) Title of the invention : A FORMULATION COMPRISING ALPHA-2 RECEPTOR AGONIST AND AN ANTI-MUSCARNIC AGENT FOR THE TREATMENT OF SAILORRHOEA

(51) International classification :C07D 209/14
(31) Priority Document No :0602857.5
(32) Priority Date :13/02/2006
(33) Name of priority country :U.K.
(86) International Application No :PCT/GB2007/050057
Filing Date :12/02/2007
(87) International Publication No :WO 2007/146717
(61) Patent of Addition to Application Number :NA
Filing Date :NA
(62) Divisional to Application Number :6924/DELNP/2008
Filed on :12/08/2008

(71)**Name of Applicant :**
1)ORIENT PHARMA (SAMOA) CO., LTD.
Address of Applicant :LEVEL 2, LOTEMAU CENTRE, VAEA STREET, APIA, SAMOA
(72)**Name of Inventor :**
1)ROACH, ALAN, GEOFFREY
2)GOLDSMITH, PAUL

(57) Abstract :
An alpha2 adrenoreceptur agonist eg. clunidine, birnonide, monoxidine, lofexidine is useful for ihe treatment of siaiorrhoea, administered by the paraungual, sublingual or buccal route. The patient to be treated is also given an anti-muscarinic agent eg oxybutynin, glycopyrrolatc, ipratropium.

No. of Pages : 13 No. of Claims : 13

(12) PATENT APPLICATION PUBLICATION
(19) INDIA
(22) Date of filing of Application :17/10/2013
(21) Application No.8993/DELNP/2013 A
(43) Publication Date : 19/12/2014

(54) Title of the invention : CATHETER BALLOON COATED WITH RAPAMYCIN AND SHELLAC

(51) International classification :A61L29/08,A61L29/16,A61L29/00
(31) Priority Document No :10 2011 100 122.4
(32) Priority Date :26/04/2011
(33) Name of priority country :Germany
(86) International Application No :PCT/EP2012/057698
Filing Date :26/04/2012
(87) International Publication No :WO 2012/146681
(61) Patent of Addition to Application Number :NA
Filing Date :NA
(62) Divisional to Application Number :NA
Filing Date :NA

(71)**Name of Applicant :**
1)EUROCOR GMBH
Address of Applicant :In den Dauen 6a 53117 Bonn Germany
(72)**Name of Inventor :**
1)POGGE VON STRANDMANN Rembert

(57) Abstract :
The present invention relates to a catheter balloon having a coating comprising rapamycin and shellac and to a method for coating catheter balloons preferably structured catheter balloons with the active pharmacological ingredient rapamycin shellac and optionally further constituents. In addition the present invention also relates to the use of such coated catheter balloons for the release of the active pharmaceutical ingredient rapamycin for prophylaxis and treatment of restenosis preferably of restenosis caused by angioplasty. The coated catheter balloons can be used alone or in combination with a coated or uncoated stent which is crimped onto the catheter balloon before or after coating with shellac and rapamycin.

No. of Pages : 32 No. of Claims : 10

(12) PATENT APPLICATION PUBLICATION
(19) INDIA
(22) Date of filing of Application :17/10/2013
(21) Application No.8994/DELNP/2013 A
(43) Publication Date : 19/12/2014

(54) Title of the invention : SYNTHESIS OF NEW FUCOSE CONTAINING CARBOHYDRATE DERIVATIVES

(51) International classification :C07H5/04,C07H5/08,C07H7/04
(31) Priority Document No :1104611.7
(32) Priority Date :18/03/2011
(33) Name of priority country :U.K.
(86) International Application No:PCT/IB2012/051314
Filing Date :19/03/2012
(87) International Publication No :WO 2012/127410
(61) Patent of Addition to Application Number :NA
Filing Date :NA
(62) Divisional to Application Number :NA
Filing Date :NA

(71)**Name of Applicant :**
1)GLYCOM A/S
Address of Applicant :Diplomvej 373 DK 2800 Kgs. Lyngby Denmark
(72)**Name of Inventor :**
1)CHAMPION Elise
2)DEKANY Gyula
3)HEDEROS Markus
4) GOSTON K¡roly

(57) Abstract :
A method for the synthesis of a compound of formula (1) or a salt thereof, wherein A is a carbohydrate linker which is a lactosyl moiety or which consists of a lactosyl moiety and at least one monosaccharide unit selected from the group consisting of: glucose, galactose, /V-acetylglucosamine, fucose and /V-acetyl neuraminic acid; and wherein Ri is one of the following anomeric protecting groups: a) -OR2, wherein R2 is a protecting group removable by catalytic hydrogenolysis; b) -SR3, wherein R3 is an optionally substituted alkyl, an optionally substituted aryl or an optionally substituted benzyl; c) -NH- C(R)=C(R) 2, wherein each R independently is one of the following electron withdrawing groups: -CN, -COOH, -COO-alkyl, -CO-alkyl, -CONH 2, -CONH- alkyl or -CON(alkyl) 2, or wherein the two R-groups are linked together and form -CO-(CH22-4CO- and thus form, together with the car bon atom to which they are attached, a 5-7 membered cycloalkan-l,3-dione, in which dione any of the methylene groups is option -ally substituted with 1 or 2 alkyl groups, and R is H or alkyl, in which a fucosyl donor of formula (2) wherein X is selected from the group consisting of: a guanosine diphosphatyl moiety, a lactose moiety, azide, fluoride, optionally substituted phenoxy-, optionally substituted pyridinyloxy-, optionally substituted 3-oxo-furanyloxy- of formula (A), optionally substituted 1,3,5-triazinyloxy- of for -mula (B), 4-methylumbelliferyloxy-group of formula (C), and a group of formula (D) wherein Ra is independently H or alkyl, or two vicinal R1 groups represent a =C(Rb)2 group, wherein R is independently H or alkyl, Rc is independently selected from the group consisting of alkoxy, amino, alkylamino and dialkylamino, R is selected from the group consisting of H, alkyl and -C(=0)R , wherein Re is OH, alkoxy, amino, alkylamino, dialkylamino, hydrazino, alkylhydrazino, dialkylhydrazino or trialkylhydrazino, is reacted with an acceptor of formula H-A-Ri or a salt thereof, wherein A and R i are as defined above, under the catalysis of an en zyme capable of transferring fucose. A compound of formula 1, its use in manufacture of human milk oligosaccharides, a method of manufacture of human milk oligosaccharides, and a fucosyl donor are also provided.

No. of Pages : 64 No. of Claims : 19

(12) PATENT APPLICATION PUBLICATION
(19) INDIA
(22) Date of filing of Application :18/09/2013
(21) Application No.8171/DELNP/2013 A
(43) Publication Date : 19/12/2014

(54) Title of the invention : LENS BARREL AND OPTICAL APPARATUS

(51) International classification :G02B7/02,G02B7/04,G02B7/10
(31) Priority Document No :2011064654
(32) Priority Date :23/03/2011
(33) Name of priority country :Japan
(86) International Application No:PCT/JP2012/056272
Filing Date :12/03/2012
(87) International Publication No :WO 2012/128101
(61) Patent of Addition to Application Number :NA
Filing Date :NA
(62) Divisional to Application Number :NA
Filing Date :NA

(71)**Name of Applicant :**
1)NIKON CORPORATION
Address of Applicant :12 1 Yurakucho 1 chome Chiyoda ku Tokyo 1008331 Japan
(72)**Name of Inventor :**
1)ASAYAMA Masateru

(57) Abstract :
Provided is a lens barrel capable of providing good operational feeling, the lens barrel including: a first barrel in which a cam groove having a shape curved with respect to a predetermined axis direction is formed to pierce through the first barrel; a second barrel capable of rotating around the predetermined axis along an outer circumferential surface of the first barrel, a straight groove extending in the predetermined axis direction being formed in the second barrel; a moving member that has a cam pin moving along the cam groove and the straight groove and moves in the predetermined axis direction while holding a lens inside the first barrel as the second barrel rotates with respect to the first barrel; and a damping mechanism that applies damping force depending on an angle of the cam groove to the predetermined axis direction to the second barrel.

No. of Pages : 21 No. of Claims : 8

(12) PATENT APPLICATION PUBLICATION
(19) INDIA
(22) Date of filing of Application :18/09/2013
(21) Application No.8173/DELNP/2013 A
(43) Publication Date : 19/12/2014

(54) Title of the invention : COURIER MANAGEMENT

(51) International classification :G06K7/01
(31) Priority Document No :13/052589
(32) Priority Date :21/03/2011
(33) Name of priority country :U.S.A.
(86) International Application No :PCT/US2012/029662
Filing Date :19/03/2012
(87) International Publication No :WO 2012/129166
(61) Patent of Addition to Application Number :NA
Filing Date :NA
(62) Divisional to Application Number :NA
Filing Date :NA

(71)**Name of Applicant :**
1)AMAZON TECHNOLOGIES INC.
Address of Applicant :P.O. Box 8102 Reno NV 89507 U.S.A.
(72)**Name of Inventor :**
1)GRIFFITH Charles M.
2)LI Jinqian
3)SHAKES Jonathan J.
4)LAI Jin
5)HUANG Jun

(57) Abstract :
The present disclosure relates to the generation of shipping labels that aid in delivery of shipments. In one example at least a portion of a carrier infrastructure is identified that is to be used to deliver each one of a plurality of shipments where each of the shipments corresponds to one of a plurality of destination locations. A shipping label is generated for each of the shipments. Each shipping label expresses both a respective one of the destination locations and a recitation of the portion of the carrier infrastructure employed to deliver a corresponding one of the shipments to a respective one of the destination locations.

No. of Pages : 38 No. of Claims : 15

(12) PATENT APPLICATION PUBLICATION
(19) INDIA
(22) Date of filing of Application :17/10/2013
(21) Application No.9000/DELNP/2013 A
(43) Publication Date : 19/12/2014

(54) Title of the invention : DYNAMIC DISTRIBUTED COORDINATION OF PARAMETERS IN A CELLULAR TELECOMMUNICATION NETWORK

(51) International classification :H04W24/02
(31) Priority Document No :13/072496
(32) Priority Date :25/03/2011
(33) Name of priority country :U.S.A.
(86) International Application No :PCT/IB2011/051858
Filing Date :27/04/2011
(87) International Publication No :WO 2012/131442
(61) Patent of Addition to Application Number :NA
Filing Date :NA
(62) Divisional to Application Number :NA
Filing Date :NA

(71)**Name of Applicant :**
1)TELEFONAKTIEBOLAGET L M ERICSSON (PUBL)
Address of Applicant :16483 Stockholm Sweden
(72)**Name of Inventor :**
1)HUI Dennis
2)GUEY Jiann Ching

(57) Abstract :
An apparatus, system, and method for dy namic, distributed coordination of parameters between a plurality of base stations (1la-1 lg) in a cellular telecommu nication network (10). An inter-cell X2+ communication in terface (36) connecting each given base station with the giv en base stations neighboring base stations is extended to communicate parameter settings between the given base sta tion and the neighboring base stations. An apparatus in each given base station receives (22) from the given base stations neighboring base stations, parameter settings being utilized by the neighboring base stations for transmitting and/or re ceiving in associated neighboring cells. The apparatus util izes (22) the parameter settings received from the neighbor ing base stations as factors to determine local parameter set tings for the given base station. The given base station then sends (23) the local parameter settings and supplemental information to the neighboring base stations so that optimal network-wide parameter settings can be selected.

No. of Pages : 20 No. of Claims : 17

(12) PATENT APPLICATION PUBLICATION
(19) INDIA
(22) Date of filing of Application :17/10/2013
(21) Application No.9001/DELNP/2013 A
(43) Publication Date : 19/12/2014

(54) Title of the invention : METHOD AND APPARATUS FOR INTEGRATING AN INFRARED (IR) PHOTOVOLTAIC CELL ON A THIN FILM PHOTOVOLTAIC CELL

(51) International classification :H01L31/078,H01L31/042
(31) Priority Document No :61/472071
(32) Priority Date :05/04/2011
(33) Name of priority country :U.S.A.
(86) International Application No :PCT/US2012/031988
Filing Date :03/04/2012
(87) International Publication No :WO 2012/138651
(61) Patent of Addition to Application Number :NA
Filing Date :NA
(62) Divisional to Application Number :NA
Filing Date :NA

(71)**Name of Applicant :**
1)UNIVERSITY OF FLORIDA RESEARCH FOUNDATION INC.
Address of Applicant :223 Grinter Hall Gainesville FL 32611 U.S.A.
2)NANOHOLDINGS LLC
(72)**Name of Inventor :**
1)SO Franky
2)KIM Do Young
3)PRADHAN Bhabendra K.

(57) Abstract :
Embodiments of the subject invention relate to solar panels methods of fabricating solar panels and methods of using solar panels to capture and store solar energy. An embodiment of a solar panel can include a photovoltaic cell that is sensitive to visible light and an infrared photovoltaic cell that is sensitive to light having a wavelength of greater than 0.70 μm.

No. of Pages : 35 No. of Claims : 101

(12) PATENT APPLICATION PUBLICATION
(19) INDIA
(22) Date of filing of Application :14/10/2013
(21) Application No.8907/DELNP/2013 A
(43) Publication Date : 19/12/2014

(54) Title of the invention : HYDROCELLULAR ABSORBENT DRESSING AND USES THEREOF FOR THE TREATMENT OF CHRONIC AND ACUTE WOUNDS

(51) International classification :A61F13/02
(31) Priority Document No :1153325
(32) Priority Date :15/04/2011
(33) Name of priority country :France
(86) International Application No :PCT/FR2012/050811
Filing Date :13/04/2012
(87) International Publication No :WO 2012/140377
(61) Patent of Addition to Application Number :NA
Filing Date :NA
(62) Divisional to Application Number :NA
Filing Date :NA

(71)**Name of Applicant :**
1)LABORATOIRES URGO
Address of Applicant :42 rue de Longvic F 21300 Chenove France
2)SOCIETE DE DEVELOPPEMENT ET DE RECHERCHE INDUSTRIELLE
(72)**Name of Inventor :**
1)AUGUSTE Stphane
2)PERNOT Jean Marc
3)DANEROL Anne Sophie
4)CHARRE Aurlie

(57) Abstract :
The invention relates to an absorbent dressing comprising a breathable impermeable substrate (4) and an absorbent foam (2) which is particularly suitable for use in the care of chronic or acute wounds. The invention relates to a dressing comprising an absorbent foam (2) and a protective substrate (4) that is impermeable to fluids but permeable to water vapour said substrate being formed by assembling a film (4a) and an openwork reinforcement that is coated with an adhesive silicone gel (4b) without blocking the holes in the reinforcement. In addition the dressing comprises a non absorbent web (5) which is disposed between the absorbent foam (2) and the substrate (4) which adheres to the adhesive silicone gel coating on the reinforcement and which is secured to the absorbent foam (2).

No. of Pages : 23 No. of Claims : 14

(12) PATENT APPLICATION PUBLICATION
(19) INDIA
(22) Date of filing of Application :14/10/2013
(21) Application No.8908/DELNP/2013 A
(43) Publication Date : 19/12/2014

(54) Title of the invention : METHOD FOR TREATMENT OF SOLID MALIGNANCIES INCLUDING ADVANCED OR METASTATIC SOLID MALIGNANCIES

(51) International classification :A61K31/519,A61P35/00
(31) Priority Document No :11165958.7
(32) Priority Date :13/05/2011
(33) Name of priority country :EPO
(86) International Application No :PCT/EP2012/058704
Filing Date :11/05/2012
(87) International Publication No :WO 2012/156283
(61) Patent of Addition to Application Number :NA
Filing Date :NA
(62) Divisional to Application Number :NA
Filing Date :NA

(71)**Name of Applicant :**
1)BOEHRINGER INGELHEIM INTERNATIONAL GMBH
Address of Applicant :Binger Strae 173 55216 Ingelheim Am Rhein Germany
(72)**Name of Inventor :**
1)TAUBE Tillmann
2)MUNZERT Gerd Michael
3)RUDOLPH Dorothea

(57) Abstract :
The present invention relates to the use of Volasertibor a salt thereof or the hydrate thereof for treating patients suffering from solid malignancies including advanced or metastatic solid malignancies comprising a high frequency administration of Volasertib according to a specific dosage schedule.

No. of Pages : 14 No. of Claims : 8

(12) PATENT APPLICATION PUBLICATION
(19) INDIA
(22) Date of filing of Application :14/10/2013
(21) Application No.8909/DELNP/2013 A
(43) Publication Date : 19/12/2014

(54) Title of the invention : FORMED WEB COMPRISING CHADS

(51) International classification :A61F13/511,A61F13/514
(31) Priority Document No :13/094593
(32) Priority Date :26/04/2011
(33) Name of priority country :U.S.A.
(86) International Application No :PCT/US2012/034795
Filing Date :24/04/2012
(87) International Publication No :WO 2012/148908
(61) Patent of Addition to Application Number :NA
Filing Date :NA
(62) Divisional to Application Number :NA
Filing Date :NA

(71)**Name of Applicant :**
1)THE PROCTER & GAMBLE COMPANY
Address of Applicant :One Procter & Gamble Plaza Cincinnati OH 45202 U.S.A.
(72)**Name of Inventor :**
1)STONE Keith Joseph
2)COE Richard George
3)HILPERT Mathias Johannes
4)BUSCH James William

(57) Abstract :
A formed web comprising discrete three-dimensional ele ments formed therein, wherein at least some of the discrete three-dimen sional elements comprise chads with corresponding apertures, wherein the aperture has a perimeter, wherein the chad has a length, wherein the chads are attached along a portion of the aperture perimeter which forms a con nection segment, wherein the connection segment is less than about 50% of the entire aperture perimeter, and wherein the web comprises a film.

No. of Pages : 49 No. of Claims : 15

(12) PATENT APPLICATION PUBLICATION
(19) INDIA
(22) Date of filing of Application :17/10/2013
(21) Application No.9010/DELNP/2013 A
(43) Publication Date : 19/12/2014

(54) Title of the invention : PROCESSES FOR RECOVERING RARE EARTH ELEMENTS FROM ALUMINUM BEARING MATERIALS

(51) International classification :C22B3/10,C22B3/38,C22B3/46
(31) Priority Document No :61/454211
(32) Priority Date :18/03/2011
(33) Name of priority country :U.S.A.
(86) International Application No :PCT/CA2012/000253
Filing Date :19/03/2012
(87) International Publication No :WO 2012/126092
(61) Patent of Addition to Application Number :NA
Filing Date :NA
(62) Divisional to Application Number :NA
Filing Date :NA

(71)**Name of Applicant :**
1)ORBITE ALUMINAE INC.
Address of Applicant :6505 route Transcanadienne Bureau 610 Saint Laurent Qubec H4T 1S3 Canada
(72)**Name of Inventor :**
1)BOUDREAULT Richard
2)PRIMEAU Denis
3)FOURNIER Joel
4)SIMONEAU Raymond
5)GARCIA Maria Cristina
6)KRIVANEC Heinz
7)DITTRICH Carsten

(57) Abstract :
The present disclosure relates to processes for recovering rare earth elements from an aluminum bearing material. The processes can comprise leaching the aluminum bearing material with an acid so as to obtain a leachate comprising at least one aluminum ion at least one iron ion at least one rare earth element and a solid and separating the leachate from the solid. The processes can also comprise substantially selectively removing at least one of the at least one aluminum ion and the at least one iron ion from the leachate and optionally obtaining a precipitate. The processes can also comprise substantially selectively removing the at least one rare earth element from the leachate and/or the precipitate.

No. of Pages : 94 No. of Claims : 145

(12) PATENT APPLICATION PUBLICATION
(19) INDIA
(22) Date of filing of Application :18/10/2013
(21) Application No.9011/DELNP/2013 A
(43) Publication Date : 19/12/2014

(54) Title of the invention : CULICINAE MOSQUITO TRA 2 RNA INTERFERENCE TECHNIQUE TO GENETICALLY PRODUCE MALENESS POPULATION

(51) International classification :A01K67/033,C12N15/09,C12N15/113
(31) Priority Document No :1-2011-00772
(32) Priority Date :23/03/2011
(33) Name of priority country :Vietnam
(86) International Application No :PCT/VN2011/000011
Filing Date :29/12/2011
(87) International Publication No :WO 2012/129577
(61) Patent of Addition to Application Number :NA
Filing Date :NA
(62) Divisional to Application Number :NA
Filing Date :NA

(71)**Name of Applicant :**
1)HOANG Duong Thanh
Address of Applicant :No 30 Unit 9 Group 4 Van Phuc Thuong ward Badinh District Hanoi City Vietnam
2)HOANG Kim Phuc
(72)**Name of Inventor :**
1)HOANG Duong Thanh
2)HOANG Kim Phuc

(57) Abstract :
The present invention develops a novel method for controlling mosquito populations. Culicinae mosquitoes carrying one or more loci of transformant Tra-2 RNAi constructs which target to mosquito Transformer-2 locus in respective or none respect ive Culicinae mosquitoes. Tra-2 sequences used to assemble Tra-2 RNAi recombinant constructs are Tra-2 gene sequences of Culicinae mosquitoes and can be derived from endogenous or exogenous sequences. The Tra-2 RNAi expression is conditional, wherein the expression causing a knockdown effect into the endogenous Tra-2 gene results in mortality of X (m) chromosome bearing sperms and produces maleness mosquito population in the nature environmental of the species.

No. of Pages : 29 No. of Claims : 10

(12) PATENT APPLICATION PUBLICATION
(19) INDIA
(22) Date of filing of Application :15/10/2013
(21) Application No.8951/DELNP/2013 A
(43) Publication Date : 19/12/2014

(54) Title of the invention : PROCESS FOR THE MANUFACTURE OF DIHALODIPHENYLSULFONES

(51) International classification :C07C315/00
(31) Priority Document No :61/476419
(32) Priority Date :18/04/2011
(33) Name of priority country :U.S.A.
(86) International Application No :PCT/EP2012/056616
Filing Date :12/04/2012
(87) International Publication No :WO 2012/143281
(61) Patent of Addition to Application Number :NA
Filing Date :NA
(62) Divisional to Application Number :NA
Filing Date :NA

(71)**Name of Applicant :**
1)SOLVAY SPECIALTY POLYMERS USA LLC
Address of Applicant :4500 McGinnis Ferry Road Alpharetta Georgia 30005 3914 U.S.A.
(72)**Name of Inventor :**
1)LOUIS Chantal

(57) Abstract :
A process for the preparation of dihalodiphenylsulfones_such as 4,4-dichlorodiphenyl sulfone or 4,4-bis-(4-chlorophenylsulfonyl)biphenyl with high regio selectivity, at low temperature and in the absence of toxic reagents by reacting togeth er at least one acid, at least one fluorinated anhydride and at least one halobenzene. The invented process is particularly suited for the manufacture of 4,4-dichlorodiphenyl sulfone.

No. of Pages : 28 No. of Claims : 13

(12) PATENT APPLICATION PUBLICATION
(19) INDIA
(22) Date of filing of Application :18/10/2013
(21) Application No.9019/DELNP/2013 A
(43) Publication Date : 19/12/2014

(54) Title of the invention : COMMUNICATION APPARATUS COMMUNICATION CONTROL METHOD AND COMPUTER READABLE STORAGE MEDIUM

(51) International classification :H04M1/00
(31) Priority Document No :2011-097391
(32) Priority Date :25/04/2011
(33) Name of priority country :Japan
(86) International Application No :PCT/JP2012/002524
Filing Date :12/04/2012
(87) International Publication No :WO 2012/147292
(61) Patent of Addition to Application Number :NA
Filing Date :NA
(62) Divisional to Application Number :NA
Filing Date :NA

(71)**Name of Applicant :**
1)SONY CORPORATION
Address of Applicant :1 7 1 Konan Minato ku Tokyo 1080075 Japan
(72)**Name of Inventor :**
1)SHIGETA Osamu
2)KASAHARA Shunichi
3)KOGA Yasuyuki
4)SUZUKI Seiji
5)YAMAMOTO Kazuyuki

(57) Abstract :
A method is provided for enabling sharing of data. The method comprises defining a sharing region corresponding to a portion of a surface of an apparatus. The method further comprises enabling sharing of data with an external device in response to user input associating the data with the sharing region.

No. of Pages : 37 No. of Claims : 20

(12) PATENT APPLICATION PUBLICATION
(19) INDIA
(22) Date of filing of Application :18/10/2013
(21) Application No.9020/DELNP/2013 A
(43) Publication Date : 19/12/2014

(54) Title of the invention : CONTACT LENS WITH BRIGHTLY COLORED SCLERA

(51) International classification :G02C7/04
(31) Priority Document No :NA
(32) Priority Date :NA
(33) Name of priority country :NA
(86) International Application No :PCT/US2011/032867
Filing Date :18/04/2011
(87) International Publication No :WO 2012/144978
(61) Patent of Addition to Application Number :NA
Filing Date :NA
(62) Divisional to Application Number :NA
Filing Date :NA

(71)**Name of Applicant :**
1)JOHNSON & JOHNSON VISION CARE INC.
Address of Applicant :7500 Centurion Parkway Jacksonville FL 32256 U.S.A.
(72)**Name of Inventor :**
1)BOWERS Angie L.
2)ZANINI Diana

(57) Abstract :
Contact lenses have patterns in which the portion that substantially lies over the sclera when worn on eye is brightly colored or tinted; the colored or tinted contact lenses can have colored or tinted central portions that enhance the iris when worn on eye and limbal rings that enhance the limbus.

No. of Pages : 17 No. of Claims : 21

(12) PATENT APPLICATION PUBLICATION
(19) INDIA
(22) Date of filing of Application :18/10/2013
(21) Application No.9021/DELNP/2013 A
(43) Publication Date : 19/12/2014

(54) Title of the invention : FUEL DISPENSER FLOW METER FRAUD DETECTION AND PREVENTION

(51) International classification :G07F11/00
(31) Priority Document No :61/477308
(32) Priority Date :20/04/2011
(33) Name of priority country :U.S.A.
(86) International Application No :PCT/US2012/034531
Filing Date :20/04/2012
(87) International Publication No :WO 2012/145681
(61) Patent of Addition to Application Number :NA
Filing Date :NA
(62) Divisional to Application Number :NA
Filing Date :NA

(71)**Name of Applicant :**
1)GILBARCO INC.
Address of Applicant :7300 W. Friendly Ave. Greensboro NC 27410 U.S.A.
(72)**Name of Inventor :**
1)WILLIAMS Rodger K.
2)PAYNE Edward A.
3)SCOTT Christopher E.

(57) Abstract :
A fuel flow meter assembly for detecting fraud caused by tampering. The fuel flow meter assembly includes a fuel flow meter comprising a shaft and a displacement sensor operatively connected to the fuel flow meter shaft for generating information representative of an amount of fuel delivered through the fuel flow meter. At least one transponder is coupled with one of the fuel flow meter shaft and the displacement sensor. At least one interrogator electronics is coupled with the other of the fuel flow meter shaft and the displacement sensor. The at least one interrogator electronics is configured for remote electronic communication with the at least one transponder.

No. of Pages : 55 No. of Claims : 33

(12) PATENT APPLICATION PUBLICATION
(19) INDIA
(22) Date of filing of Application :18/10/2013
(21) Application No.9022/DELNP/2013 A
(43) Publication Date : 19/12/2014

(54) Title of the invention : PROSTHESIS FOR CONNECTING AN ANATOMICAL DUCT

(51) International classification :A61B17/11,A61F2/06,A61M39/10
(31) Priority Document No :1152364
(32) Priority Date :22/03/2011
(33) Name of priority country :France
(86) International Application No :PCT/FR2012/050449
Filing Date :05/03/2012
(87) International Publication No :WO 2012/127145
(61) Patent of Addition to Application Number :NA
Filing Date :NA
(62) Divisional to Application Number :NA
Filing Date :NA

(71)**Name of Applicant :**
1)CARMAT
Address of Applicant :36 avenue de lEurope Immeuble lEtendard CS 40533 F 78941 Vlizy Villacoublay cdex France
(72)**Name of Inventor :**
1)DA CRUZ LOURO Pierre

(57) Abstract :
According to the invention, the tubular prosthesis (1) for connecting an anatomical duct (C) comprises at least two individual tubular elements (2) and a sealed mechanical means (4) for connecting said separate elements to each other.

No. of Pages : 16 No. of Claims : 8

(12) PATENT APPLICATION PUBLICATION
(19) INDIA
(22) Date of filing of Application :18/10/2013
(21) Application No.9023/DELNP/2013 A
(43) Publication Date : 19/12/2014

(54) Title of the invention : ELECTRIC VEHICLE WITH RANGE EXTENDER

(51) International classification :B60L11/18,B60K6/46
(31) Priority Document No :61/473643
(32) Priority Date :08/04/2011
(33) Name of priority country :U.S.A.
(86) International Application No :PCT/US2012/032510
Filing Date :06/04/2012
(87) International Publication No :WO 2012/138991
(61) Patent of Addition to Application Number :NA
Filing Date :NA
(62) Divisional to Application Number :NA
Filing Date :NA

(71)**Name of Applicant :**
1)POLARIS INDUSTRIES INC.
Address of Applicant :2100 Highway 55 Medina MN 55340 U.S.A.
(72)**Name of Inventor :**
1)KOHLER Beat
2)FREI Marcel
3)ERASMUS Peter Johannes
4)CRAIN Stephen G.
5)THEISS Travis N.
6)STEWART Stacey E.

(57) Abstract :
A utility vehicle is disclosed having an electric drive. The drivetrain is comprised of batteries a motor a transaxle driven by the motor a rear differential driven by the transaxle and a prop shaft which is driven by the transaxle and drives a front differential. The batteries are provided in two groups and are supported on the frame of the vehicle. An on board range extender is provided to charge the batteries and/or to provide power to the motor.

No. of Pages : 71 No. of Claims : 45

(12) PATENT APPLICATION PUBLICATION
(19) INDIA
(22) Date of filing of Application :18/10/2013
(21) Application No.9024/DELNP/2013 A
(43) Publication Date : 19/12/2014

(54) Title of the invention : METHOD AND SYSTEM FOR CONTROLLING THE LIGHTING OF THE BRAKE LIGHTS OF A MOTOR VEHICLE AND VEHICLE PROVIDED WITH SUCH A SYSTEM

(51) International classification	:B60Q1/44,B60Q11/00,B60T7/04
(31) Priority Document No	:1153366
(32) Priority Date	:19/04/2011
(33) Name of priority country	:France
(86) International Application No	:PCT/FR2012/050725
Filing Date	:04/04/2012
(87) International Publication No	:WO 2012/143640
(61) Patent of Addition to Application Number	:NA
Filing Date	:NA
(62) Divisional to Application Number	:NA
Filing Date	:NA

(71)**Name of Applicant :**
1)RENAULT SAS
Address of Applicant :13 15 Quai le Gallo F 92100 Boulogne Billancourt France
(72)**Name of Inventor :**
1)MAHE Michel

(57) Abstract :
The invention pertains to a method and system for controlling the ignition 5 of stop lights (22) of an automotive vehicle, comprising the acquisition, by a first electronic control device (23), of a first input signal (24) representative of a mechanical loading on a pedal (25) for actuating a device for braking the vehicle. The ignition of the stop lights comprises the transmission, by the first control device, of an order of ignition (28) of 10 the stop lights which is representative of the first input signal to a second electronic control device (26) by a multiplexed information network (27), and then the emission, by the second electronic control device, of an output signal (29) ensuring command of the ignition of the stop lights by regulation of the electrical voltage applied to their terminals as a function 15 of the order of ignition.

No. of Pages : 25 No. of Claims : 16

(12) PATENT APPLICATION PUBLICATION
(19) INDIA
(22) Date of filing of Application :27/09/2013
(21) Application No.8451/DELNP/2013 A
(43) Publication Date : 19/12/2014

(54) Title of the invention : SYNTHETIC RAW ELASTOMERIC COMPOSITIONS IN FREE FLOWING PELLET FORM AND PROCESS FOR OBTAINING THE SAME

(51) International classification :C08K3/00
(31) Priority Document No :61/467733
(32) Priority Date :25/03/2011
(33) Name of priority country :U.S.A.
(86) International Application No :PCT/IB2012/000565
Filing Date :21/03/2012
(87) International Publication No :WO 2012/131458
(61) Patent of Addition to Application Number :NA
Filing Date :NA
(62) Divisional to Application Number :NA
Filing Date :NA

(71)**Name of Applicant :**
1)DYNASOL ELASTOMEROS S.A. DE C.V.
Address of Applicant :Km. 28.5 Carretera Tampico Mante Col. Santa Amalia 89602 Altamira Tamaulipas Mexico
(72)**Name of Inventor :**
1)HERN NDEZ ZAMORA Gabriel
2)S NCHEZ ORTEGA Ricardo
3)RODR GUEZ JU REZ Zen^{3}n
4)CAMACHO SALAS Ismael
5)MOCTEZUMA ESPIRICUETO Sergio

(57) Abstract :
A raw elastomeric composition in free flowing pellet form is described which comprises a raw elastomer with molecular weight from 50 000 to 400 000 Da and an anti block agent comprising inorganic fillers capable of forming emulsions in water. Likewise a process for obtaining said raw elastomeric compositions in free flowing pellet form comprising the steps of: a) polymerizing at least one monomer through solution polymerization in order to obtain elastomer crumb; b) forming an aqueous suspension of the elastomer crumbs; c) dewatering the aqueous suspension; d) adding an anti block agent comprising inorganic fillers capable of forming emulsions in water; e) drying the dewatered suspension; and f) pelletizing the elastomer to form a raw elastomeric composition in free flowing pellets form. The raw elastomeric composition in free flowing pellets form thus obtained can be used as an adhesive composition in asphalt modification and in asphalt emulsions.

No. of Pages : 28 No. of Claims : 26

(12) PATENT APPLICATION PUBLICATION
(19) INDIA
(22) Date of filing of Application :18/10/2013
(21) Application No.9030/DELNP/2013 A
(43) Publication Date : 19/12/2014

(54) Title of the invention : IMPLEMENTING EPC IN A CLOUD COMPUTER WITH OPENFLOW DATA PLANE

(51) International classification :H04W24/02
(31) Priority Document No :13/113727
(32) Priority Date :23/05/2011
(33) Name of priority country :U.S.A.
(86) International Application No :PCT/IB2012/052233
Filing Date :03/05/2012
(87) International Publication No :WO 2012/160465
(61) Patent of Addition to Application Number :NA
Filing Date :NA
(62) Divisional to Application Number :NA
Filing Date :NA

(71)**Name of Applicant :**
1)TELEFONAKTIEBOLAGET L M ERICSSON (PUBL)
Address of Applicant :S 164 83 Stockholm Sweden
(72)**Name of Inventor :**
1)KEMPF James
2)LNING Harald
3)NILSSON Tord K.
4)JOHANSSON Bengt E.
5)PETTERSSON Sten

(57) Abstract :
A method for implementing a control plane of an evolved packet core (EPC) of a third generation partnership project (3GPP) long term evolution (LTE) network in a cloud computing system including initializing the plurality of control plane modules of the EPC within the controller each control plane module in the plurality of control plane modules initialized as a separate virtual machine by the cloud manager; monitoring resource utilization of each control plane module and the control plane traffic handled by each control plane module; detecting a threshold level of resource utilization or traffic load for one of the plurality of control plane modules of the EPC; and initializing a new control plane module as a separate virtual machine by the cloud manager in response to detecting the threshold level the new control plane module to share the load of the one of the plurality of control plane modules.

No. of Pages : 63 No. of Claims : 19

(12) PATENT APPLICATION PUBLICATION
(19) INDIA
(22) Date of filing of Application :18/10/2013
(21) Application No.9031/DELNP/2013 A
(43) Publication Date : 19/12/2014

(54) Title of the invention : INTERNAL COMBUSTION ENGINE AND FUEL DELIVERY DEVICE

(51) International classification :F01M9/04,F01M5/00
(31) Priority Document No :102011075793.7
(32) Priority Date :13/05/2011
(33) Name of priority country :Germany
(86) International Application No :PCT/EP2012/058229
Filing Date :04/05/2012
(87) International Publication No :WO 2012/156213
(61) Patent of Addition to Application Number :NA
Filing Date :NA
(62) Divisional to Application Number :NA
Filing Date :NA

(71)**Name of Applicant :**
1)ROBERT BOSCH GMBH
Address of Applicant :Postfach 30 02 20 70442 Stuttgart Germany
(72)**Name of Inventor :**
1)PECK Rainer

(57) Abstract :
What is proposed is an internal combustion engine (2) having a plurality of moveable parts which are lubricated with liquid lubricant. The moveable parts of the internal combustion engine (2) are lubricated with fuel without the addition of lubricating oil, wherein the fuel serves for combustion in a combustion chamber of the internal combustion engine (2). Also proposed is a fuel-delivery device for a fuel injection device of an internal combustion engine (2). The internal combustion engine (2) has a plurality of moveable parts and is lubricated with fuel from a supply container (12). A delivery pump (10) is used to deliver fuel from the supply container (12) to the suction side of a high-pressure pump (16) and the highpressure pump (16) is used to deliver fuel to a high-pressure region (18) with at least one injector (20).

No. of Pages : 12 No. of Claims : 9

(12) PATENT APPLICATION PUBLICATION
(19) INDIA
(22) Date of filing of Application :18/10/2013
(21) Application No.9032/DELNP/2013 A
(43) Publication Date : 19/12/2014

(54) Title of the invention : SENSOR FOR DETECTING THE QUALITY OF A FLUID

(51) International classification :G01N13/04,F01N3/20,F01N11/00
(31) Priority Document No :10 2011 076 496.8
(32) Priority Date :26/05/2011
(33) Name of priority country :Germany
(86) International Application No :PCT/EP2012/056186
Filing Date :04/04/2012
(87) International Publication No :WO 2012/159815
(61) Patent of Addition to Application Number :NA
Filing Date :NA
(62) Divisional to Application Number :NA
Filing Date :NA

(71)**Name of Applicant :**
1)ROBERT BOSCH GMBH
Address of Applicant :Postfach 30 02 20 70442 Stuttgart Germany
(72)**Name of Inventor :**
1)GLOECKLE Markus
2)FRITSCH Andreas

(57) Abstract :
The invention relates to a device for measuring the quality of an operating substance and/or auxiliary substance (12), in particular a reduction means, stored in a tank (10), wherein a reference container (20) is connected to the operating substance and/or the auxiliary substance (12) via a semi-permeable membrane (24) and the reference container (20) is filled with a medium (22) which has a known osmotic pressure relative to the utilized operating substance and/or auxiliary substance (12).

No. of Pages : 17 No. of Claims : 11

(12) PATENT APPLICATION PUBLICATION
(19) INDIA
(22) Date of filing of Application :18/10/2013
(21) Application No.9012/DELNP/2013 A
(43) Publication Date : 19/12/2014

(54) Title of the invention : DEVICE AND METHOD FOR PROGRAMMING A PROJECTILE

(51) International classification :F42C17/04,F42C11/06
(31) Priority Document No :10 2011 018 248.9
(32) Priority Date :19/04/2011
(33) Name of priority country :Germany
(86) International Application No :PCT/EP2012/055531
Filing Date :28/03/2012
(87) International Publication No :WO 2012/143218
(61) Patent of Addition to Application Number :NA
Filing Date :NA
(62) Divisional to Application Number :NA
Filing Date :NA

(71)**Name of Applicant :**
1)RHEINMETALL AIR DEFENCE AG
Address of Applicant :Birchstrasse 155 CH 8050 Z¼rich Switzerland
(72)**Name of Inventor :**
1)MLLER Kurt
2)ALBERTI Aldo

(57) Abstract :
The invention relates to a measurement device (10, 10) which is integrated in a measurement and programming basis for a projectile (13), which detects the fields and/or Signals escaping from/originating from a programming coil (27) and is electrically connected to an evaluation device (1 1) which evaluates said detected values. In special cases, according to the invention said values can then be considered during programming of the projectile (13).

No. of Pages : 19 No. of Claims : 10

(12) PATENT APPLICATION PUBLICATION
(19) INDIA
(22) Date of filing of Application :18/10/2013
(21) Application No.9013/DELNP/2013 A
(43) Publication Date : 19/12/2014

(54) Title of the invention : PRESSURE EXCHANGER

(51) International classification :F04F13/00,F04B7/00
(31) Priority Document No :13/079038
(32) Priority Date :04/04/2011
(33) Name of priority country :U.S.A.
(86) International Application No :PCT/US2011/042923
Filing Date :05/07/2011
(87) International Publication No :WO 2012/138367
(61) Patent of Addition to Application Number :NA
Filing Date :NA
(62) Divisional to Application Number :NA
Filing Date :NA

(71)**Name of Applicant :**
1)FLOWSERVE HOLDINGS INC.
Address of Applicant :5215 North OConnor Boulevard Suite 2300 Irving TX 75039 U.S.A.
(72)**Name of Inventor :**
1)ANDREWS William T.

(57) Abstract :
A pressure vessel provided with a first port acting as a high pressure inlet of a first stream and a second port acting as a high pressure outlet. A rotatable valve element is located in the centre of the machine and includes a centre plate which is utilized to separate high pressure streams. At each end of the valve element are valves. The valves ensure that as the valve element rotates the exchange ducts are either both isolated or that one is exposed to high pressure while the other is exposed to low pressure. In operation a fluid stream is introduced to the machine at high pressure through port and flows around the outside of the exchange duct towards the centre of the machine. The stream then flows downwardly to the valve element where it then passes through the open ports of the valve element and into flow distributor. The stream then passes into and upwardly in the exchange duct causing upward displacement of the duct piston resulting in the pressurization and flow of the second fluid above the duct piston. The second fluid then flows into the upper flow distributor into the valve element and then downwardly and finally between the exchange duct and out through the high pressure port. At the same time a fluid stream is introduced to the machine at low pressure through port. This flows into the valve element and then into the flow distributor. From the flow distributor it flows and downwardly into the pressure exchange duct causing downward displacement of duct piston and resulting in flow of the first fluid below the duct piston which then flows into the lower flow distributor into the valve element and then out of the lower sealing plate at port. A planar radial sealing surface promotes sealing connection between the rotatable valve element and various pressure exchange ducts within the pressure vessel.

No. of Pages : 32 No. of Claims : 18

(12) PATENT APPLICATION PUBLICATION
(19) INDIA
(22) Date of filing of Application :18/10/2013
(21) Application No.9014/DELNP/2013 A
(43) Publication Date : 19/12/2014

(54) Title of the invention : METHOD AND DEVICE FOR PRETREATING A ROLLED GOOD BEFORE HOT ROLLING

(51) International classification :C21D8/02,C21D9/00,F27B17/00
(31) Priority Document No :A861/2011
(32) Priority Date :10/06/2011
(33) Name of priority country :Austria
(86) International Application No :PCT/EP2012/060327
Filing Date :01/06/2012
(87) International Publication No :WO 2012/168141
(61) Patent of Addition to Application Number :NA
Filing Date :NA
(62) Divisional to Application Number :NA
Filing Date :NA

(71)**Name of Applicant :**
1)SIEMENS VAI METALS TECHNOLOGIES GMBH
Address of Applicant :Turmstrae 44 A 4031 Linz Austria
(72)**Name of Inventor :**
1)HOHENBICHLER Gerald
2)LINZER Bernd

(57) Abstract :
The invention relates to a method and a device for pretreating a rolled good (3). The aim of the invention is to find a method and a device vvith which the rolled good (3) can be both energy-efficiently heated and thoroughly descaled before hot rolling. Said problem is solved by the following method steps: preheating the rolled good (3) in a preheating furnace (4) by a plurality of burners (11); descaling the preheated rolled good (3) in a descaling device (5); heating the descaled rolled good (3) in a heating furnace by means of a plurality of burners (11), wherein the burners substoichiometrically bum a carbon carrier so that the rolled good (3) is held in a reducing atmosphere in the heating furnace (7) by the exhaust (12, 13) created during combustion; introducing a first part of the exhaust (12) and oxygen (15) into the preheating furnace (4); post-combusting the first part of the exhaust (12) in the preheating fiimace (4), wherein the volume of oxygen (15) is chosen so that the rolled good (3) is held in an oxidizing atmosphere in the preheating furnace (4).

No. of Pages : 21 No. of Claims : 14

(12) PATENT APPLICATION PUBLICATION
(19) INDIA
(22) Date of filing of Application :15/10/2013
(21) Application No.8957/DELNP/2013 A
(43) Publication Date : 19/12/2014

(54) Title of the invention : ASSEMBLY OF AIR AND PNEUMATIC DEVICES

(51) International classification :F03D3/00,F04D3/02,F03D3/04
(31) Priority Document No :P394367
(32) Priority Date :14/04/2011
(33) Name of priority country :Poland
(86) International Application No :PCT/PL2012/000018
Filing Date :28/03/2012
(87) International Publication No :WO 2012/141603
(61) Patent of Addition to Application Number :NA
Filing Date :NA
(62) Divisional to Application Number :NA
Filing Date :NA

(71)**Name of Applicant :**
1)PISKORZ Waldemar
Address of Applicant :Polna 12 PL 21 509 Koden Poland
2)PISKORZ Tomasz Tadeusz
(72)**Name of Inventor :**
1)PISKORZ Waldemar
2)PISKORZ Tomasz Tadeusz

(57) Abstract :
The subject of the present invention is an assembly of air and pneumatic devices, especially a high power unit, intended for power generation. The invention consists in that the assembly is preferably made up of three columns (3) consisting of segments (2) arranged coaxially, connected with rigid connecting bars (4). The stators (5) of the segments (2) have four struts (7) connected to plates (8) and (9), with at least one strut (7) having attached to it a conduit (3 1) for feeding compressed air, said conduit being equipped with nozzles (32). Shafts (23) of rotors (6) of one column (3a) are coupled with a compressor unit (33) which is connected to a compressed air tank (34). The compressed air tank (34) is connected via a solenoid valve (36), a compressed air unit (37) and its branchings to conduits (3 1) of the stators (5) of the other columns (3b) and (3c). The solenoid valve (36) is connected via a control system (38) to a speed meter of the rotor (6).

No. of Pages : 16 No. of Claims : 10

(12) PATENT APPLICATION PUBLICATION
(19) INDIA
(22) Date of filing of Application :15/10/2013
(21) Application No.8958/DELNP/2013 A
(43) Publication Date : 19/12/2014

(54) Title of the invention : PROCESS FOR THE PRODUCTION OF 4 CHLOROACETOACETYL CHLORIDE 4 CHLOROACETOACETIC ACID ESTERS AMIDES AND IMIDES

(51) International classification :C07C51/58,C07C67/14,C07C231/02
(31) Priority Document No :11003510.2
(32) Priority Date :29/04/2011
(33) Name of priority country :EPO
(86) International Application No :PCT/EP2012/057529
Filing Date :25/04/2012
(87) International Publication No :WO 2012/146604
(61) Patent of Addition to Application Number :NA
Filing Date :NA
(62) Divisional to Application Number :NA
Filing Date :NA

(71)**Name of Applicant :**
1)LONZA LTD
Address of Applicant :Lonzastrasse CH 3930 Visp Switzerland
(72)**Name of Inventor :**
1)KLEGRAF Ellen
2)CARAUCAN DAVILA Miguel Angel

(57) Abstract :
The invention relates to process for the continuous production of 4- chloroacetoacetyl chloride, comprising the steps of (a) feeding diketene and chlorine into a thin film reactor and (b) reacting the diketene and chlorine to obtain 4-chloroacetoacetyl chloride. The invention also relates to a process for the production of 4- chloroacetoaceticacid ester, 4-chloroacetoaceticacid amide or 4-chloroacetoaceticacid imide from 4-chloroacetoacetyl chloride ob tained according to the inventive process.

No. of Pages : 26 No. of Claims : 10

(12) PATENT APPLICATION PUBLICATION
(19) INDIA
(22) Date of filing of Application :15/10/2013
(21) Application No.8959/DELNP/2013 A
(43) Publication Date : 19/12/2014

(54) Title of the invention : SWITCHING DELAY CONTROLLER FOR A SWITCHED MODE POWER SUPPLY

(51) International classification :H02M3/335,H02M1/38
(31) Priority Document No :NA
(32) Priority Date :NA
(33) Name of priority country :NA
(86) International Application No :PCT/EP2011/057490
Filing Date :10/05/2011
(87) International Publication No :WO 2012/152314
(61) Patent of Addition to Application Number :NA
Filing Date :NA
(62) Divisional to Application Number :NA
Filing Date :NA

(71)**Name of Applicant :**
1)TELEFONAKTIEBOLAGET L M ERICSSON (PUBL)
Address of Applicant :S 164 83 Stockholm Sweden
(72)**Name of Inventor :**
1)WAHLEDOW Fredrik
2)BORGENGREN Henrik
3)KARLSSON Magnus
4)KULLMAN Anders
5)MALMBERG Jonas

(57) Abstract :
A switching delay controller (150) for controlling a switching delay between the switching of a first and a second switching element (Ql, Q2, Q3, Q4) in a switched mode power supply (300), the switched mode power supply comprising a feed back signal generator (140) operable to generate a feedback signal indicative of a difference between an output (Vout) and a refer - ence (Vref) for the output, and a drive circuit (120) for switching the first and second switching elements so as to convert an input voltage (Vin) supply (300) into the output voltage (Vout) based on the feedback signal. The switching delay controller (150) com prises a switching delay calculator operable to cause a change of the switching delay for at least one switching cycle, and a feedback signal monitor operable to monitor the feedback signal and determine a change in the feedback signal in response to the change to the switching delay. The switching delay calculator is further operable to calculate a switching delay to increase an efficiency of the switched mode power supply (300) based on the determined change in the feedback signal, and cause a change of the switching delay to the calculated switching delay

No. of Pages : 40 No. of Claims : 17

(12) PATENT APPLICATION PUBLICATION
(19) INDIA
(22) Date of filing of Application :18/10/2013
(21) Application No.9037/DELNP/2013 A
(43) Publication Date : 19/12/2014

(54) Title of the invention : GLYCOSIDE DERIVATIVES AND THEIR USES FOR THE TREATMENT OF DIABETES

(51) International classification :C07D405/10,A61K31/70,A61P3/10
(31) Priority Document No :61/475476
(32) Priority Date :14/04/2011
(33) Name of priority country :U.S.A.
(86) International Application No :PCT/IB2012/051799
Filing Date :12/04/2012
(87) International Publication No :WO 2012/140597
(61) Patent of Addition to Application Number :NA
Filing Date :NA
(62) Divisional to Application Number :NA
Filing Date :NA

(71)**Name of Applicant :**
1)NOVARTIS AG
Address of Applicant :Lichtstrasse 35 CH 4056 Basel Switzerland
(72)**Name of Inventor :**
1)BEBERNITZ Gregory Raymond

(57) Abstract :
The present invention provides a compound of formula I; (I) a method for manufacturing the compounds of the invention and its therapeutic uses. The present invention further provides a combination of pharmacologically active agents and a pharmaceutical composition.

No. of Pages : 78 No. of Claims : 35

(12) PATENT APPLICATION PUBLICATION
(19) INDIA
(22) Date of filing of Application :14/10/2013
(21) Application No.8921/DELNP/2013 A
(43) Publication Date : 19/12/2014

(54) Title of the invention : BITE SIZE NUTRITIONAL PRODUCTS HAVING A FILLING AND METHODS FOR USING SAME

(51) International classification :A23L1/164,A23L1/29,A23G3/42
(31) Priority Document No :61/483093
(32) Priority Date :06/05/2011
(33) Name of priority country :U.S.A.
(86) International Application No :PCT/EP2012/058129
Filing Date :03/05/2012
(87) International Publication No :WO 2012/152650
(61) Patent of Addition to Application Number :NA
Filing Date :NA
(62) Divisional to Application Number :NA
Filing Date :NA

(71)**Name of Applicant :**
1)NESTEC S.A.
Address of Applicant :Case Postale 353, CH-1800 Vevey Switzerland
(72)**Name of Inventor :**
1)ROY Marie Georgina
2)THONNEY Yves Michel

(57) Abstract :
Bite-size nutritional products and meth ods of using same are provided. In a general embodi ment, the present disclosure provides a bite-size nutri tional product having a protein- or carbohydrate-based dough that encases a semi-liquid filling. The semi-liquid filling may be, for example, a jelly, jam or puree com prising fruit, peanut butter, chocolate, etc. The nutrition al products can also include a coating having delicious and nutritious components such as chocolate, fruit pieces, crispy cereal components, nuts, and similar com ponents. The bite-size nutritional products can be spe cifically designed and provided to an athlete for custom ized protein or carbohydrate intake and portion control. The bite-size nutritional products can also be specifically designed for individuals desiring a delicious tasting, health-conscious snack.

No. of Pages : 46 No. of Claims : 27

(12) PATENT APPLICATION PUBLICATION
(19) INDIA
(22) Date of filing of Application :14/10/2013
(21) Application No.8922/DELNP/2013 A
(43) Publication Date : 19/12/2014

(54) Title of the invention : MIXER SENSORS AND METHODS FOR USING SAME

(51) International classification :G01N11/14,B01F7/00
(31) Priority Document No :61/483092
(32) Priority Date :06/05/2011
(33) Name of priority country :U.S.A.
(86) International Application No :PCT/EP2012/057954
Filing Date :01/05/2012
(87) International Publication No :WO 2012/152616
(61) Patent of Addition to Application Number :NA
Filing Date :NA
(62) Divisional to Application Number :NA
Filing Date :NA

(71)**Name of Applicant :**
1)NESTEC S.A.
Address of Applicant :Avenue Nestle 55 CH 1800 Vevey Switzerland
(72)**Name of Inventor :**
1)OZADALI Ferhan
2)MISHRA Dharmendra Kumar
3)SULAIMAN Rabiha

(57) Abstract :
Apparatuses for measuring rheological properties of fluids and methods for using same are provided. In a general embodiment the present disclosure provides a mixer sensor that is configured to be attached to a rheometer drive head and used to measure rheological properties of a fluid having particulates over a wide range of temperatures and shear rates. Apparatuses capable of obtaining rheological data of a fluid having particulates over a wide range of temperatures and shear rates provides for more precise rheological measurements. The temperatures may be very high temperatures that exceed 100°C and the shear rates may includes a range of shear rates that are typically found in a processing pipeline system.

No. of Pages : 44 No. of Claims : 40

(12) PATENT APPLICATION PUBLICATION
(19) INDIA
(22) Date of filing of Application :14/10/2013
(21) Application No.8923/DELNP/2013 A
(43) Publication Date : 19/12/2014

(54) Title of the invention : BELT CONVEYOR WITH SNAGLESS RETRACTABLE FLIGHTS

(51) International classification :B65G17/24
(31) Priority Document No :13/072469
(32) Priority Date :25/03/2011
(33) Name of priority country :U.S.A.
(86) International Application No :PCT/US2012/029628
Filing Date :19/03/2012
(87) International Publication No :WO 2012/134855
(61) Patent of Addition to Application Number :NA
Filing Date :NA
(62) Divisional to Application Number :NA
Filing Date :NA

(71)**Name of Applicant :**
1)LAITRAM L.L.C.
Address of Applicant :Legal Department 200 Laitram Lane Harahan Louisiana 70123 U.S.A.
(72)**Name of Inventor :**
1)FOURNEY Matthew L.

(57) Abstract :
A belt conveyor (10) having snagless retractable flights (36). The flights (36) rotate from a retracted position generally parallel to a top conveying surface on the conveyor belt (10) to an extended position standing up and away from the top surface. In one version of the flight (36) a distal edge of the flight is bent downward into a cavity (24) in the top surface of the belt when the flight (36) is retracted. In another version rollers at the distal end of the flight extend upstream of the distal edge of the flight. The flight rollers are rotated when the flight is retraced to lift and propel conveyed articles over the edges of the flight. Thus both flights avoid snagging articles with discontinuous bottoms.

No. of Pages : 15 No. of Claims : 16

(12) PATENT APPLICATION PUBLICATION
(19) INDIA
(22) Date of filing of Application :14/10/2013
(21) Application No.8926/DELNP/2013 A
(43) Publication Date : 19/12/2014

(54) Title of the invention : PROCESS FOR CONVERTING A SOLID BIOMASS MATERIAL

(51) International classification :C10G3/00,C10G11/18,B01J8/18
(31) Priority Document No :11163425.9
(32) Priority Date :21/04/2011
(33) Name of priority country :EPO
(86) International Application No :PCT/EP2012/057408
Filing Date :23/04/2012
(87) International Publication No:WO 2012/143567
(61) Patent of Addition to Application Number :NA
Filing Date :NA
(62) Divisional to Application Number :NA
Filing Date :NA

(71)**Name of Applicant :**
1)SHELL INTERNATIONALE RESEARCH MAATSCHAPPIJ B.V.
Address of Applicant :Carel van Bylandtlaan 30 NL 2596 HR The Hague Netherlands
(72)**Name of Inventor :**
1)SCHAVERIEN Colin John
2)JANSSEN Andries Hendrik
3)HARRIS John William
4)VAN PAASEN Sander
5)GOSSELINK Johan Willem
6)WAY Nicolaas Wilhelmus Joseph

(57) Abstract :
A process for converting a solid biomass material comprising contacting the solid biomass material with a catalytic cracking catalyst at a temperature of more than 400°C in a riser reactor to produce one or more cracked products wherein the riser reactor is an external riser reactor with a curve and/or low velocity zone at its termination and wherein a part of the catalytic cracking catalyst has deposited in the curve and/or low velocity zone.

No. of Pages : 47 No. of Claims : 15

(12) PATENT APPLICATION PUBLICATION
(19) INDIA
(22) Date of filing of Application :14/10/2013
(21) Application No.8927/DELNP/2013 A
(43) Publication Date : 19/12/2014

(54) Title of the invention : GLYCOSIDE DERIVATIVES AND USES THEREOF

(51) International classification :C07H13/04,C07H15/04,C07H15/12
(31) Priority Document No :61/475493
(32) Priority Date :14/04/2011
(33) Name of priority country:U.S.A.
(86) International Application No :PCT/IB2012/051798
Filing Date :12/04/2012
(87) International Publication No :WO 2012/140596
(61) Patent of Addition to Application Number :NA
Filing Date :NA
(62) Divisional to Application Number :NA
Filing Date :NA

(71)**Name of Applicant :**
1)NOVARTIS AG
Address of Applicant :Lichtstrasse 35 CH 4056 Basel Switzerland
(72)**Name of Inventor :**
1)BEBERNITZ Gregory Raymond
2)BOCK Mark Gary

(57) Abstract :
The present invention provides a compound of formula (I); a method for manufacturing the compounds of the invention and its therapeutic uses. The present invention further provides a combination of pharmacologically active agents and a pharmaceutical composition.

No. of Pages : 104 No. of Claims : 42

(12) PATENT APPLICATION PUBLICATION
(19) INDIA
(22) Date of filing of Application :17/09/2013
(21) Application No.8140/DELNP/2013 A
(43) Publication Date : 19/12/2014

(54) Title of the invention : THERMAL TRANSFER DEVICE WITH SPIRAL FLUID PATHWAYS

(51) International classification :F28D9/04
(31) Priority Document No :NA
(32) Priority Date :NA
(33) Name of priority country :NA
(86) International Application No :PCT/US2011/027352
Filing Date :07/03/2011
(87) International Publication No :WO 2012/121696
(61) Patent of Addition to Application Number :NA
Filing Date :NA
(62) Divisional to Application Number :NA
Filing Date :NA

(71)**Name of Applicant :**
1)AAVID THERMALLOY LLC
Address of Applicant :67 Primrose Drive Laconia NH 03246 U.S.A.
(72)**Name of Inventor :**
1)MORUZZI Marco

(57) Abstract :
A thermal transfer device comprising a thermal transfer surface and a passageway for conducting a thermal transfer fluid from an inlet to an outlet while passing in thermal contact with the thermal transfer surface. The passageway has at least two spiral passages and a connection channel connecting the at least two spiral passages to permit flow of the heat transfer fluid from a first spiral passage to a second spiral passage; thereby forming a path for the flow of the thermal fluid from the inlet through the passageway along the first spiral passage to the connection channel then along the connection channel to the second spiral passage and then to the outlet.

No. of Pages : 26 No. of Claims : 28

(12) PATENT APPLICATION PUBLICATION
(19) INDIA
(22) Date of filing of Application :17/09/2013
(21) Application No.8141/DELNP/2013 A
(43) Publication Date : 19/12/2014

(54) Title of the invention : POLY(VINYL ACETAL) RESIN FILM AND MULTILAYER STRUCTURE USING SAME

(51) International classification :C08J5/18,B29C47/88,B29C47/92
(31) Priority Document No :2011072090
(32) Priority Date :29/03/2011
(33) Name of priority country :Japan
(86) International Application No :PCT/JP2012/058406
Filing Date :29/03/2012
(87) International Publication No :WO 2012/133668
(61) Patent of Addition to Application Number :NA
Filing Date :NA
(62) Divisional to Application Number :NA
Filing Date :NA

(71)**Name of Applicant :**
1)KURARAY CO. LTD.
Address of Applicant :1621 Sakazu Kurashiki shi Okayama 7100801 Japan
(72)**Name of Inventor :**
1)ODA Hidemasa
2)MUKOSE Takashi
3)TOKOH Makio

(57) Abstract :
The invention prevents the intrusion of bubbles and the occurrence of unfilled areas at the edges of poly(vinyl acetal) resin films that are used as one layer of multilayer structures such as laminated glass or solar cell modules by: the range of thickness thereof in the width direction being 10% or less; the volatile matter content being 1.0 mass% or less; and making MD1 MD2 and MD3 all to be 3 20% when the portions that are 5% of the total width from either edge in the width direction are each heated for 30 minutes at 150°C and the larger value of the thermal shrinkages in the direction of flow which is parallel thereto and perpendicular to the width direction is called thermal shrinkage MD1 and the other value is called MD2 and when the central portion in the width direction is heated for 30 minutes at 150°C and the thermal shrinkage in the direction of flow which is parallel thereto and perpendicular to the width direction is called thermal shrinkage MD3.

No. of Pages : 62 No. of Claims : 13

(12) PATENT APPLICATION PUBLICATION
(19) INDIA
(22) Date of filing of Application :21/10/2013
(21) Application No.9050/DELNP/2013 A
(43) Publication Date : 19/12/2014

(54) Title of the invention : C KIT ANTIBODIES AND USES THEREOF

(51) International classification :A61K39/395,C07K16/28,A61K45/06
(31) Priority Document No :61/485255
(32) Priority Date :12/05/2011
(33) Name of priority country :U.S.A.
(86) International Application No :PCT/US2012/036240
Filing Date :03/05/2012
(87) International Publication No :WO 2012/154480
(61) Patent of Addition to Application Number :NA
Filing Date :NA
(62) Divisional to Application Number :NA
Filing Date :NA

(71)**Name of Applicant :**
1)IMCLONE LLC
Address of Applicant :c/o Eli Lilly and Company Lilly Corporate Center Indianapolis Indiana 46285 U.S.A.
(72)**Name of Inventor :**
1)AMATULLI Michael
2)BREEN (NEE BRENNAN) Laura Ann
3)PAZ Keren

(57) Abstract :
This invention is directed to antibodies that specifically bind to an extracellular domain of human c Kit pharmaceutical compositions comprising these antibodies and their use in treating cancer.

No. of Pages : 43 No. of Claims : 13

(12) PATENT APPLICATION PUBLICATION
(19) INDIA
(22) Date of filing of Application :21/10/2013
(21) Application No.9052/DELNP/2013 A
(43) Publication Date : 19/12/2014

(54) Title of the invention : CLEAR WET SPRAYS AND GELS

(51) International classification :A61K8/02,A61K8/49
(31) Priority Document No :61/479578
(32) Priority Date :27/04/2011
(33) Name of priority country :U.S.A.
(86) International Application No :PCT/US2012/035501
Filing Date :27/04/2012
(87) International Publication No :WO 2012/149355
(61) Patent of Addition to Application Number :NA
Filing Date :NA
(62) Divisional to Application Number :NA
Filing Date :NA

(71)**Name of Applicant :**
1)ISP INVESTMENTS INC.
Address of Applicant :1011 Centre Road Suite 315 Wilmington DE 19805 U.S.A.
(72)**Name of Inventor :**
1)FARES Hani M.
2)PRETTYPAUL Donald I.
3)KENNEDY Diane M.

(57) Abstract :
Sun-care products are described that protect from UV radiation and do not turn white when applied to wet skin. The sun-care product may comprise (A) a cosmetically-acceptable, substantially non-aqueous vehicle, and (B) a UV active, wherein said non-aqueous vehicle comprises alcohol in an amount of 50% (w/w) or less based on the weight of the sun-care product and an ester wherein said non-aqueous vehicle comprises at least 10%> by weight esters based on the total weight of the non-aqueous vehicle and said sun-care product is substantially non- whitening upon application to wet skin.

No. of Pages : 41 No. of Claims : 20

(12) PATENT APPLICATION PUBLICATION
(19) INDIA
(22) Date of filing of Application :21/10/2013
(21) Application No.9053/DELNP/2013 A
(43) Publication Date : 19/12/2014

(54) Title of the invention : HIGH VALUE ORGANIC ENHANCED INORGANIC FERTILIZERS

(51) International classification :C05F11/08,C05F11/00,C05F3/00
(31) Priority Document No :61/468157
(32) Priority Date :28/03/2011
(33) Name of priority country :U.S.A.
(86) International Application No :PCT/US2012/030895
Filing Date :28/03/2012
(87) International Publication No :WO 2012/135317
(61) Patent of Addition to Application Number :NA
Filing Date :NA
(62) Divisional to Application Number :NA
Filing Date :NA

(71)**Name of Applicant :**
1)VITAG HOLDINGS LLC
Address of Applicant :117 Allwin Lane Beech Island SC 29842 U.S.A.
(72)**Name of Inventor :**
1)DAHMS Gary L.
2)CARR James P.
3)BURNHAM Jeffrey C.
4)JARRETT Barry R.

(57) Abstract :
The invention is directed to the manufacture of fertilizer having com mercial levels of nitrogen supplemented with organic substances, e.g., 16-0.5-2-17-3- 14 (N-P- K-S-Fe-Organic by dry weight). The process causes treatment of organic matter with concentrated acid that heats a fertilizer mix causing the hydrolysis of various organic polymers that may be present. A biosolids mix is subsequently injected sequentially with a nitrogen base under controlled conditions. The resultant sterilized and liquefied organic matter is then disbursed over recycled material for the production of granules in a granulator before final drying to greater than 98 percent solids. Because the process allows for the controlled addition of acids and ammonia, desired levels of components can be achieved. For example, fertilizers with high nitrogen content can ro contain variable amounts of phosphate or iron. In addition, the process is both scalable, odor controlled and safe thereby allowing for the location of biosolid processing facilities in most any location desired without affecting the environment or generating a nuisance to local communities. Further, the fertilizer of the invention provides a dual nitrogen-release profile when applied to crops. After application to soil, fertilizer of the invention releases an immediate bolus of nitrogen, similar to traditional ammonium sulfate, which is followed by a continued slow release of nitrogen typically over a single growing season.

No. of Pages : 61 No. of Claims : 53

(12) PATENT APPLICATION PUBLICATION
(19) INDIA
(22) Date of filing of Application :15/10/2013
(21) Application No.8932/DELNP/2013 A
(43) Publication Date : 19/12/2014

(54) Title of the invention : INFORMATION PROCESSING APPARATUS INFORMATION PROCESSING METHOD AND PROGRAM

(51) International classification :G06F3/048
(31) Priority Document No :2011096516
(32) Priority Date :22/04/2011
(33) Name of priority country :Japan
(86) International Application No :PCT/JP2012/002342
Filing Date :04/04/2012
(87) International Publication No :WO 2012/144138
(61) Patent of Addition to Application Number :NA
Filing Date :NA
(62) Divisional to Application Number :NA
Filing Date :NA

(71)**Name of Applicant :**
1)SONY CORPORATION
Address of Applicant :1-7-1 Konan Minato ku Tokyo 1080075 Japan
(72)**Name of Inventor :**
1)HARADA Osamu
2)DOI Takeo
3)ITOYAMA Junji

(57) Abstract :
An apparatus includes an operation unit a movement amount correction unit and a display control unit. The operation unit is configured to acquire a drag operation on a display unit. The movement amount correction unit is configured to increase a movement amount of the drag operation. The display control unit is configured to control the display unit according to the increased movement amount.

No. of Pages : 68 No. of Claims : 12

(12) PATENT APPLICATION PUBLICATION
(19) INDIA
(22) Date of filing of Application :21/10/2013
(21) Application No.9059/DELNP/2013 A
(43) Publication Date : 19/12/2014

(54) Title of the invention : HIGH POWER IMPULSE MAGNETRON SPUTTERING METHOD PROVIDING ENHANCED IONIZATION OF THE SPUTTERED PARTICLES AND APPARATUS FOR ITS IMPLEMENTATION

(51) International classification :C23C14/35,C23C14/56,C23C14/34
(31) Priority Document No :61/477216
(32) Priority Date :20/04/2011
(33) Name of priority country :U.S.A.
(86) International Application No :PCT/EP2012/001632
Filing Date :16/04/2012
(87) International Publication No :WO 2012/143110
(61) Patent of Addition to Application Number :NA
Filing Date :NA
(62) Divisional to Application Number :NA
Filing Date :NA

(71)**Name of Applicant :**
1)OERLIKON TRADING AG TRBBACH
Address of Applicant :Hauptstrasse 53 CH 9477 Tr¼bbach Switzerland
(72)**Name of Inventor :**
1)LECHTHALER Markus

(57) Abstract :
Method for performing a HIPIMS coating process whereby a minimal distance 5 between target and substrate is reduced till achieving an essentially maximal bias current at substrate during coating process and thereby improving considerably coating quality and increasing deposition rate in comparison with conventional HIPIMS coating processes.

No. of Pages : 23 No. of Claims : 15

(12) PATENT APPLICATION PUBLICATION
(19) INDIA
(22) Date of filing of Application :21/10/2013
(21) Application No.9060/DELNP/2013 A
(43) Publication Date : 19/12/2014

(54) Title of the invention : PROCESS FOR FORMING AN ANTI FOULING COATING SYSTEM

(51) International classification :C09D183/12
(31) Priority Document No :61/480475
(32) Priority Date :29/04/2011
(33) Name of priority country :U.S.A.
(86) International Application No :PCT/US2012/035085
Filing Date :26/04/2012
(87) International Publication No :WO 2012/149085
(61) Patent of Addition to Application Number :NA
Filing Date :NA
(62) Divisional to Application Number :NA
Filing Date :NA

(71)**Name of Applicant :**
1)PPG INDUSTRIES OHIO INC.
Address of Applicant :3800 West 143rd Street Cleveland Ohio 44111 U.S.A.
(72)**Name of Inventor :**
1)LU Songwei

(57) Abstract :
Provided is a process for forming a durable anti fouling coating on a substrate including: (a) modifying a surface of the substrate using a surface modification means; (b) applying a first coating composition to at least a portion of the modified substrate surface to form a first coating the composition containing a first perfluoropolyether modified silane; (c) curing the first coating at a temperature and a relative humidity sufficient to promote hydrolysis of the perfluoropolyether modified silane component; (d) optionally modifying the surface of the cured first coating using the same or different surface modification means as was used in (a); (e) applying a second coating composition to the cured first coating to form a second coating thereover the composition containing a second perfluoropolyether modified silane; and (f) curing the second coating at a temperature and a relative humidity sufficient to promote hydrolysis of the second perfluoropolyether modified silane.

No. of Pages : 24 No. of Claims : 22

(12) PATENT APPLICATION PUBLICATION
(19) INDIA
(22) Date of filing of Application :21/10/2013
(21) Application No.9061/DELNP/2013 A
(43) Publication Date : 19/12/2014

(54) Title of the invention : METHOD AND APPARATUS FOR SUBSTANTIALLY CONSTANT PRESSURE INJECTION MOLDING OF THINWALL PARTS

(51) International classification :B29C45/77
(31) Priority Document No :61/488564
(32) Priority Date :20/05/2011
(33) Name of priority country :U.S.A.
(86) International Application No :PCT/US2012/038846
Filing Date :21/05/2012
(87) International Publication No :WO 2012/162245
(61) Patent of Addition to Application Number :NA
Filing Date :NA
(62) Divisional to Application Number :NA
Filing Date :NA

(71)**Name of Applicant :**
1)THE PROCTER & GAMBLE COMPANY
Address of Applicant :One Procter & Gamble Plaza Cincinnati Ohio 45202 U.S.A.
(72)**Name of Inventor :**
1)ALTONEN Gene Michael
2)DODD Michael Thomas
3)RAMON MARTINEZ Natalia
4)MC CONNELL Kimberly Nichole
5)LUMPKIN Danny David
6)BREIDENBACH Vincent Sean
7)LAWSON John Russell

(57) Abstract :
A substantially constant pressure injection molding method and machine that forms molded parts by injecting molten thermoplastic material into a mold cavity at a substantially constant pressures. As a result the mold cavity is filled with molten thermoplastic material by advancing a continuous flow front of thermoplastic material from a gate to an end of the mold cavity.

No. of Pages : 48 No. of Claims : 10

(12) PATENT APPLICATION PUBLICATION
(19) INDIA
(22) Date of filing of Application :21/10/2013
(21) Application No.9062/DELNP/2013 A
(43) Publication Date : 19/12/2014

(54) Title of the invention : NON NATURALLY BALANCED FEED SYSTEM FOR AN INJECTION MOLDING APPARATUS

(51) International classification :B29C45/27
(31) Priority Document No :61/488553
(32) Priority Date :20/05/2011
(33) Name of priority country :U.S.A.
(86) International Application No :PCT/US2012/038787
Filing Date :21/05/2012
(87) International Publication No :WO 2012/162222
(61) Patent of Addition to Application Number :NA
Filing Date :NA
(62) Divisional to Application Number :NA
Filing Date :NA

(71)**Name of Applicant :**
1)THE PROCTER & GAMBLE COMPANY
Address of Applicant :One Procter & Gamble Plaza Cincinnati Ohio 45202 U.S.A.
(72)**Name of Inventor :**
1)ALTONEN Gene Michael
2)BERG Charles John Jr.
3)NEUFARTH Ralph Edward
4)SCHILLER Gary Francis

(57) Abstract :
A non naturally balanced feed system for an injection mold of an injection molding apparatus the injection mold having a plurality of mold cavities the plurality of mold cavities receiving molten plastic at a substantially constant viscosity the non naturally balanced feed system comprising: a hot runner having a first feed channel that terminates at a first mold cavity in the plurality of mold cavities and a second feed channel that terminates at a second mold cavity in the plurality of mold cavities; and a gate for receiving molten plastic the gate being in fluid communication with one of the first and second feed channels wherein the feed system maintains a balance of 90% or greater.

No. of Pages : 34 No. of Claims : 15

(12) PATENT APPLICATION PUBLICATION
(19) INDIA
(22) Date of filing of Application :15/10/2013
(21) Application No.8945/DELNP/2013 A
(43) Publication Date : 19/12/2014

(54) Title of the invention : TEAT FOR FEEDING BOTTLE

(51) International classification :A61J11/04
(31) Priority Document No :61/472834
(32) Priority Date :07/04/2011
(33) Name of priority country :U.S.A.
(86) International Application No :PCT/US2012/031787
Filing Date :02/04/2012
(87) International Publication No :WO 2012/138592
(61) Patent of Addition to Application Number :NA
Filing Date :NA
(62) Divisional to Application Number :NA
Filing Date :NA

(71)**Name of Applicant :**
1)TESINI David A.
Address of Applicant :13 Norcross Road Hopkinton MA 01748 U.S.A.
2)WIESMAN Joshua P.
(72)**Name of Inventor :**
1)TESINI David A.
2)WIESMAN Joshua P.

(57) Abstract :
A feeding teat constructed and arranged to be used on a bottle that holds and dispenses a liquid to be fed to an infant or child. The teat has a nipple portion with an orifice at a terminal end and defines an interior profile shaped by intersecting reverse curves that generally decrease the interior diameter of the nipple portion toward the orifice so as to channel fluid flow into the orifice. There is a flange portion constructed and arranged to be releasably coupled to the bottle such that the liquid can flow from the bottle into the teat and a convexly shaped intermediate portion integrally connecting the nipple portion to the flange portion. A pressure relief valve built into the teat is constructed and arranged to admit air into the interior of at least one of the teat and the bottle.

No. of Pages : 28 No. of Claims : 28

(12) PATENT APPLICATION PUBLICATION
(19) INDIA
(22) Date of filing of Application :15/10/2013
(21) Application No.8946/DELNP/2013 A
(43) Publication Date : 19/12/2014

(54) Title of the invention : DIRECT PLUG ELEMENT WITH A PROTECTED DIRECT CONTACT

(51) International classification :H01R12/72
(31) Priority Document No :10 2011 076 988.9
(32) Priority Date :06/06/2011
(33) Name of priority country :Germany
(86) International Application No :PCT/EP2012/057381
Filing Date :23/04/2012
(87) International Publication No :WO 2012/167985
(61) Patent of Addition to Application Number :NA
Filing Date :NA
(62) Divisional to Application Number :NA
Filing Date :NA

(71)**Name of Applicant :**
1)ROBERT BOSCH GMBH
Address of Applicant :Postfach 30 02 20 70442 Stuttgart Germany
(72)**Name of Inventor :**
1)WITTMANN Rolf

(57) Abstract :
The present invention relates to a direct plug element comprising a direct contact (2) having a contact lamination (4) which is designed to make direct contact with an exposed contact region (7) and comprising a housing (3) in which the contact lamination (4) is arranged wherein the contact lamination (4) has a contact section (41) and an abutment section (42) and wherein the abutment section (42) is designed to come into contact with an abutment surface (12; 50) in order to deform the contact lamination (4) in such a way that the contact section (41) protrudes from the housing (3) for the purpose of making contact with the exposed contact region (7).

No. of Pages : 13 No. of Claims : 11

(12) PATENT APPLICATION PUBLICATION
(19) INDIA
(22) Date of filing of Application :15/10/2013
(21) Application No.8947/DELNP/2013 A
(43) Publication Date : 19/12/2014

(54) Title of the invention : NOZZLE ASSEMBLY FOR A FUEL INJECTOR AND FUEL INJECTOR

(51) International classification :F02M51/06,F02M61/20,F02M61/12
(31) Priority Document No :10 2011 076 665.0
(32) Priority Date :30/05/2011
(33) Name of priority country :Germany
(86) International Application No :PCT/EP2012/059601
Filing Date :23/05/2012
(87) International Publication No :WO 2012/163759
(61) Patent of Addition to Application Number :NA
Filing Date :NA
(62) Divisional to Application Number :NA
Filing Date :NA

(71)**Name of Applicant :**
1)ROBERT BOSCH GMBH
Address of Applicant :Postfach 30 02 20 70442 Stuttgart Germany
(72)**Name of Inventor :**
1)KOENINGER Andreas

(57) Abstract :
The invention relates to a nozzle assembly for a fuel injector having a nozzle needle (1) which is guided with a reciprocating movement over at least one guide section (5 6) in a high pressure bore (2) of a nozzle body (3) for opening and closing at least one injection opening (4) and is loaded at least indirectly by the spring force of a closing spring (8) and having a restrictor bore body (7) which is loaded by spring force in the axial direction. According to the invention the restrictor bore body (7) bears against the nozzle needle (1) and is loaded in the axial direction by the spring force of the closing spring (8). Furthermore the invention relates to a fuel injector having a nozzle assembly of this type.

No. of Pages : 14 No. of Claims : 10

(12) PATENT APPLICATION PUBLICATION
(19) INDIA
(22) Date of filing of Application :21/10/2013

(21) Application No.9064/DELNP/2013 A
(43) Publication Date : 19/12/2014

(54) Title of the invention : IMPROVED MATCHING TECHNIQUES FOR WIDE BANDGAP POWER TRANSISTORS

(51) International classification :H01L23/66,H01L23/64
(31) Priority Document No :1105912.8
(32) Priority Date :07/04/2011
(33) Name of priority country :U.K.
(86) International Application No :PCT/EP2012/056202
Filing Date :04/04/2012
(87) International Publication No :WO 2012/136719
(61) Patent of Addition to Application Number :NA
Filing Date :NA
(62) Divisional to Application Number :NA
Filing Date :NA

(71)**Name of Applicant :**
1)DIAMOND MICROWAVE DEVICES LIMITED
Address of Applicant :Leeds Innovation Centre 103 Clarendon Road Leeds Yorkshire LS2 9DF U.K.
(72)**Name of Inventor :**
1)LANG Richard John
2)HILTON Richard Paul
3)GILL Jonathan David Stanley

(57) Abstract :
There are disclosed impedance matching networks and technique for impedance matching to microwave power transistors. Distributed capacitor inductor networks are used so as to provide a high degree of control and accuracy, especially in terms of inductance values, in comparison to existing lumped capacitor arrangements. The use of bond wires is reduced, with inductance being provided primarily by microstrip transmission lines on the capacitors.

No. of Pages : 17 No. of Claims : 21

(12) PATENT APPLICATION PUBLICATION
(19) INDIA
(22) Date of filing of Application :21/10/2013
(21) Application No.9065/DELNP/2013 A
(43) Publication Date : 19/12/2014

(54) Title of the invention : REVERSE COATING METHOD FOR ANTIREFLECTION FILM

(51) International classification :G02B1/11,C23C14/30,C23C14/32
(31) Priority Document No :201110069118.6
(32) Priority Date :22/03/2011
(33) Name of priority country :China
(86) International Application No :PCT/CN2012/072706
Filing Date :21/03/2012
(87) International Publication No :WO 2012/126365
(61) Patent of Addition to Application Number :NA
Filing Date :NA
(62) Divisional to Application Number :NA
Filing Date :NA

(71)**Name of Applicant :**
1)WATCHMAN TECH. CO. LIMITED
Address of Applicant :No.31 East Beijing Road Xuanwu Nanjing Jiangsu 210008 China
(72)**Name of Inventor :**
1)LU Hsin Tseng

(57) Abstract :
Disclosed is a reverse coating method for an antireflection film that removes light interference images in optical imaging. During a process where an electronic coating machine applies an antireflection film (1) onto optically transparent material (2), the positive and negative charges on the electrode polarization bins of the particle gun in the electronic coating machine are reversed so as to perform a reversed coating of the antireflection film (1). The method applies the antireflection film (1) using the method of electronic ion coating, so that the working surface of the coated film is reversed to face inwards and towards the optically transparent material (2), thereby effectively removing ghost images. The imaged object has no obvious chromatic aberration, the sharpness of the image is enhanced, and the light reflection effect is reduced.

No. of Pages : 9 No. of Claims : 7

(12) PATENT APPLICATION PUBLICATION
(19) INDIA
(22) Date of filing of Application :18/10/2013
(21) Application No.9016/DELNP/2013 A
(43) Publication Date : 19/12/2014

(54) Title of the invention : SYNTHETIC GENES

(51) International classification :C12N5/04,C12N5/10,C12N15/82
(31) Priority Document No :61/475921
(32) Priority Date :15/04/2011
(33) Name of priority country :U.S.A.
(86) International Application No :PCT/US2012/033458
Filing Date :13/04/2012
(87) International Publication No :WO 2012/142371
(61) Patent of Addition to Application Number :NA
Filing Date :NA
(62) Divisional to Application Number :NA
Filing Date :NA

(71)**Name of Applicant :**
1)DOW AGROSCIENCES LLC
Address of Applicant :9330 Zionsville Road Indianapolis IN 46268 U.S.A.
(72)**Name of Inventor :**
1)LARRINUA Ignacio Mario
2)MERLO Donald J.
3)REDDY Avutu S.
4)THIRUMALAISWAMYSEKHAR Arvind Kumar
5)WOOSLEY Aaron Todd

(57) Abstract :
The invention provides synthetic nucleic acid sequences encoding proteins of interest that are particularly adapted to express well in plants. The claimed synthetic sequences utilize plant optimized codons roughly in the same frequency at which they are utilized on average in genes naturally occurring in the plant species. The invention further includes synthetic DNA sequence for herbicide tolerance water and/or heat stress tolerance healthy oil modifications and for transformation marker genes and selectable marker genes are used. DNA construct and transgenic plants containing the synthetic sequences are taught as are methods and compositions for using the plants in agriculture.

No. of Pages : 193 No. of Claims : 23

(12) PATENT APPLICATION PUBLICATION
(19) INDIA
(22) Date of filing of Application :18/10/2013
(21) Application No.9017/DELNP/2013 A
(43) Publication Date : 19/12/2014

(54) Title of the invention : ROTARY OFFSET PRINTING MACHINE AND METHOD FOR PRINTING ON SUBSTRATES

(51) International classification :B41F7/02,B41F7/08
(31) Priority Document No :NA
(32) Priority Date :NA
(33) Name of priority country :NA
(86) International Application No :PCT/EP2011/002140
Filing Date :29/04/2011
(87) International Publication No :WO 2012/146264
(61) Patent of Addition to Application Number :NA
Filing Date :NA
(62) Divisional to Application Number :NA
Filing Date :NA

(71)**Name of Applicant :**
1)MANROLAND AG
Address of Applicant :M¼hlheimer Strae 341 63075 Offenbach am Main Germany
(72)**Name of Inventor :**
1)RIESCHER Georg
2)HAMM Anton
3)HAMMER Josef
4)DYLLA Norbert
5)HOFFMANN Eduard

(57) Abstract :
A method for printing on a printing material web by using a rotary offset printing machine is provided wherein the rotary offset printing machine comprises at least one printing unit having at least two plate cylinders the method comprising the following steps: Providing the printing material web having a first side and a second side; wherein the printing material web is treated to reduce or avoid an inherent relative movement to itself; feeding the printing material web into and through the at least one printing unit; and printing on the first side of the printing material web by means of a blanket cylinder on which respective images from the at least two plate cylinders have been transferred onto wherein the at least two plate cylinders are arranged relative to each other with respect to their Operation such that the images from the at least two plate cylinders are transferred to an identical position on the blanket cylinder.

No. of Pages : 26 No. of Claims : 22

(12) PATENT APPLICATION PUBLICATION
(19) INDIA
(22) Date of filing of Application :18/10/2013
(21) Application No.9018/DELNP/2013 A
(43) Publication Date : 19/12/2014

(54) Title of the invention : IMPLANTABLE AND REMOVABLE CUSTOMIZABLE BODY CONDUIT

(51) International classification :A61F2/06
(31) Priority Document No :13/151157
(32) Priority Date :01/06/2011
(33) Name of priority country :U.S.A.
(86) International Application No :PCT/US2012/040278
Filing Date :31/05/2012
(87) International Publication No :WO 2012/166968
(61) Patent of Addition to Application Number :NA
Filing Date :NA
(62) Divisional to Application Number :NA
Filing Date :NA

(71)**Name of Applicant :**
1)HEMOSPHERE INC.
Address of Applicant :6545 City West Parkway Eden Prairie MN 55344 U.S.A.
(72)**Name of Inventor :**
1)HOHMANN Stephen
2)DANN Mitchell
3)HERRIG Judson

(57) Abstract :
An apparatus and method are provided to treat a stenosis. A delivery device is provided that has an elongate tubular member (404) coupled therewith. The elongate tubular member (404) has an outside surface that is configured to prevent adherence of in vivo matter. The tubular member (404) has a proximal end (408) and a distal end (412) and is reinforced along its length to maintain open lumen under a transverse load. The tubular member is placed in the vasculature such that the distal end (412) of the elongate tubular member (404) is disposed distal of a stenosis. The proximal end (408) of the elongate tubular member is disposed inside the vessel preferably at a location proximal of the stenosis. Thereafter after a therapeutic period the elongate tubular member (404) is removed intact.

No. of Pages : 64 No. of Claims : 22

(12) PATENT APPLICATION PUBLICATION
(19) INDIA
(22) Date of filing of Application :21/10/2013
(21) Application No.9070/DELNP/2013 A
(43) Publication Date : 19/12/2014

(54) Title of the invention : METHOD AND CONFIGURATION TO REDUCE FATIGUE IN STEAM DRUMS

(51) International classification :F22B37/22,F22B37/26
(31) Priority Document No :13/069528
(32) Priority Date :23/03/2011
(33) Name of priority country :U.S.A.
(86) International Application No :PCT/US2012/029729
Filing Date :20/03/2012
(87) International Publication No :WO 2012/129195
(61) Patent of Addition to Application Number :NA
Filing Date :NA
(62) Divisional to Application Number :NA
Filing Date :NA

(71)**Name of Applicant :**
1)ALSTOM TECHNOLOGY LTD
Address of Applicant :Brown Boveri Strasse 7 CH 5400 Baden Switzerland
(72)**Name of Inventor :**
1)BAIRLEY, Donald W.
2)DROUX, Francois
3)HAZELTON, Alan C
4)PERRIN, Ian J
5)RUCHTI, Christoph
6)RUECKER, Falk
7)SELBY, Glenn T.
8)BAUVER, II, Wesley P.

(57) Abstract :
A heat recovery steam generator that includes a first steam drum (118a) for receiving a flow of water and steam from an evaporator. The first steam drum is adapted to provide the flow of water and steam to a second steam drum. The second steam drum (118b) is in fluid communication with the first steam drum and receives the flow of water and steam from the first steam drum and separates steam from the flow of water and steam to form a separated steam. There is a steam flow outlet (156) positioned in the second steam drum the steam flow outlet adapted to release the separated steam from the second steam drum.

No. of Pages : 18 No. of Claims : 20

(12) PATENT APPLICATION PUBLICATION
(19) INDIA
(22) Date of filing of Application :11/10/2013
(21) Application No.8864/DELNP/2013 A
(43) Publication Date : 19/12/2014

(54) Title of the invention : DIAPHRAGM INTERFACE APPARATUS TO IMPROVE A CYCLE LIFE OF A DIAPHRAGM

(51) International classification :G05D16/06
(31) Priority Document No :13/052475
(32) Priority Date :21/03/2011
(33) Name of priority country :U.S.A.
(86) International Application No :PCT/US2012/026099
Filing Date :22/02/2012
(87) International Publication No :WO 2012/148532
(61) Patent of Addition to Application Number :NA
Filing Date :NA
(62) Divisional to Application Number :NA
Filing Date :NA

(71)**Name of Applicant :**
1)TESCOM CORPORATION
Address of Applicant :12616 Industrial Blvd. Elk River MN 55330 U.S.A.
(72)**Name of Inventor :**
1)CLIFFORD Jason D.
2)LARSEN Todd W.
3)TUTT Brian J.

(57) Abstract :
Diaphragm interface apparatus to improve a cycle life of a diaphragm are described. An example fluid regulator includes a fluid flow passageway between an inlet and an outlet where a sensing chamber defines a portion of the fluid flow passageway. A diaphragm senses a pressure in the sensing chamber and a diaphragm interface adjacent the sensing chamber has a curved surface to contact a portion of the diaphragm that moves in response to pressure changes in the sensing chamber. The curved surface affects an amount of stress imparted to the portion of the diaphragm during operation of the fluid regulator.

No. of Pages : 25 No. of Claims : 20

(12) PATENT APPLICATION PUBLICATION
(19) INDIA
(22) Date of filing of Application :11/10/2013
(21) Application No.8865/DELNP/2013 A
(43) Publication Date : 19/12/2014

(54) Title of the invention : BONNET APPARATUS FOR USE WITH FLUID REGULATORS

(51) International classification	:F16K27/02,F16K31/126,G05D16/06
(31) Priority Document No	:13/052451
(32) Priority Date	:21/03/2011
(33) Name of priority country	:U.S.A.
(86) International Application No	:PCT/US2012/025536
Filing Date	:17/02/2012
(87) International Publication No	:WO 2012/128869
(61) Patent of Addition to Application Number	:NA
Filing Date	:NA
(62) Divisional to Application Number	:NA
Filing Date	:NA

(71)**Name of Applicant :**
1)TESCOM CORPORATION
Address of Applicant :12616 Industrial Blvd. Elk River MT 55330 U.S.A.
(72)**Name of Inventor :**
1)CLIFFORD Jason D.
2)CRAMER Mark Wharton

(57) Abstract :
Bonnet apparatus for use with fluid regulators are described. An example bonnet (206) includes a body (302) having a cavity (304) to receive a loading assembly (220) of the fluid regulator (200). A support structure (324) is disposed in the cavity (304) and extends across the cavity (304) to increase an impact toughness or strength of the body (302).

No. of Pages : 22 No. of Claims : 20

(12) PATENT APPLICATION PUBLICATION
(19) INDIA
(22) Date of filing of Application :11/10/2013
(21) Application No.8866/DELNP/2013 A
(43) Publication Date : 19/12/2014

(54) Title of the invention : BACK PRESSURE REGULATING VALVE WITH VALVE CARTRIDGE

(51) International classification :F16K17/06,F16K17/08
(31) Priority Document No :13/052535
(32) Priority Date :21/03/2011
(33) Name of priority country :U.S.A.
(86) International Application No :PCT/US2012/026102
Filing Date :22/02/2012
(87) International Publication No :WO 2012/161780
(61) Patent of Addition to Application Number :NA
Filing Date :NA
(62) Divisional to Application Number :NA
Filing Date :NA

(71)**Name of Applicant :**
1)TESCOM CORPORATION
Address of Applicant :12616 Industrial Blvd. Elk River MN 55330 U.S.A.
(72)**Name of Inventor :**
1)CLIFFORD Jason D.

(57) Abstract :
A back pressure regulating valve (10) includes a valve body (14) having a fluid inlet (16) a fluid outlet (18) a central bore (20) a bonnet (22) housing a load spring (24) operatively coupled to a diaphragmn (26) and a chamber (30) in flow communication with the fluid inlet. A valve cartridge (12) includes a housing (34) sized to fit within the central bore and including a first portion (36) a second portion (38) a valve guide (40) and a flow passage (42). A valve seat (44) is disposed in the housing and a valve plug (44) is shiftable between an open position permitting flow and a closed position preventing flow. The valve plug engages the valve guide and a spring (52) biases the valve plug toward the open position. A retainer (54) is disposed adjacent the first portion of the housing and engages a portion of the valve plug to retain the valve plug in the housing.

No. of Pages : 22 No. of Claims : 20

(12) PATENT APPLICATION PUBLICATION
(19) INDIA
(22) Date of filing of Application :11/10/2013
(21) Application No.8867/DELNP/2013 A
(43) Publication Date : 19/12/2014

(54) Title of the invention : VIBRATION DAMPENING SPRING CLIP FOR PRESSURE REGULATOR

(51) International classification :G05D7/01,G05D16/06
(31) Priority Document No :NA
(32) Priority Date :NA
(33) Name of priority country :NA
(86) International Application No :PCT/CN2011/071998
Filing Date :21/03/2011
(87) International Publication No :WO 2012/126171
(61) Patent of Addition to Application Number :NA
Filing Date :NA
(62) Divisional to Application Number :NA
Filing Date :NA

(71)**Name of Applicant :**
1)TESCOM CORPORATION
Address of Applicant :12616 Industrial Blvd. Elk River Minnesota 55330 U.S.A.
(72)**Name of Inventor :**
1)CHEN Liqun
2)HEATON Scott Matthew
3)CLIFFORD Jason David

(57) Abstract :
A control assembly for a fluid flow control device (10) includes a control element (16) a load spring (44) and a spring clip (42). The control element (16) can be movably disposed for controlling fluid flow and the load spring (44) biases the control element (16) into a predetermined position. The spring clip (42) contacts the load spring (44) at a plurality of points to dampen vibrations experienced by the load spring thereby reducing and/or eliminating resonance. The spring clip (42) includes a body plate (58) and first and second opposing arm plates (60a 60b) extending away from the body plate. Each arm plate includes a proximal end (68a 68b) adjacent the body plate a distal end (70a 70b) spaced away from the body plate and a finger (72a 72b) extending upwardly away from the distal end. A corner (74a 74b) at an intersection between the finger and the distal end includes a contoured edge (76a 76b) for facilitating attachment of the load spring to the spring clip. The spring clip can better dampen vibrations and reduce and/or eliminate resonance.

No. of Pages : 22 No. of Claims : 21

(12) PATENT APPLICATION PUBLICATION
(19) INDIA
(22) Date of filing of Application :17/10/2013
(21) Application No.8995/DELNP/2013 A
(43) Publication Date : 19/12/2014

(54) Title of the invention : DEVICE AND METHOD FOR DETECTING AND/OR DETERMINING THE POSITION OF A BARRIER LAYER CONTAINED IN THE WALL OF A TUBULAR PACKAGING MATERIAL

(51) International classification :G01N21/84,G01N21/90
(31) Priority Document No :11162538.0
(32) Priority Date :15/04/2011
(33) Name of priority country :EPO
(86) International Application No :PCT/IB2012/051650
Filing Date :04/04/2012
(87) International Publication No :WO 2012/140546
(61) Patent of Addition to Application Number :NA
Filing Date :NA
(62) Divisional to Application Number :NA
Filing Date :NA

(71)**Name of Applicant :**
1)AISAPACK HOLDING S.A.
Address of Applicant :rue de la Praise CH 1896 Vouvry Switzerland
(72)**Name of Inventor :**
1)MEDICO Lonard

(57) Abstract :
The invention relates to a device for detecting and/or determining the position of a barrier layer contained in the wall of a tubular packaging material. The device comprises an infrared source and an infrared receiver, said source and said receiver being placed so as to transmit (receive, respectively) infrared radiation through part of the wall of a tube containing a barrier layer to be analyzed. The invention also relates to a method of detecting and/or determining the position of a barrier layer contained in the wall of a tubular packaging material 15, the method comprising transmitting infrared radiation through a tube wall containing a bar rier layer, receiving and analyzing said infrared radiation.

No. of Pages : 14 No. of Claims : 12

(12) PATENT APPLICATION PUBLICATION
(19) INDIA
(22) Date of filing of Application :17/10/2013
(21) Application No.8997/DELNP/2013 A
(43) Publication Date : 19/12/2014

(54) Title of the invention : COMPOSITION AND METHODS FOR ANTI MACROFOULING TREATMENT OF POLYMERS

(51) International classification :A01N65/26,A01P1/00,A01P3/00
(31) Priority Document No :61/474114
(32) Priority Date :11/04/2011
(33) Name of priority country :U.S.A.
(86) International Application No :PCT/CA2012/000347
Filing Date :11/04/2012
(87) International Publication No :WO 2012/139202
(61) Patent of Addition to Application Number :NA
Filing Date :NA
(62) Divisional to Application Number :NA
Filing Date :NA

(71)**Name of Applicant :**
1)THE GOVERNING COUNCIL OF THE UNIVERSITY OF TORONTO
Address of Applicant :Simcoe Hall Room 133S 27 Kings College Circle Toronto Ontario M5S 1A1 Canada
(72)**Name of Inventor :**
1)GUNARI Nikhil A.
2)DAS Mallika
3)WALKER Gilbert C.

(57) Abstract :
There is herein provided a composition comprising azadirachtin, preferably neem oil, and methods of use thereof for in hibiting macrofouling on a polymer in an aquatic environment.

No. of Pages : 26 No. of Claims : 26

(12) PATENT APPLICATION PUBLICATION
(19) INDIA
(22) Date of filing of Application :17/10/2013
(21) Application No.8998/DELNP/2013 A
(43) Publication Date : 19/12/2014

(54) Title of the invention : IMPROVED CAP FOR A BUBBLE TRAP

(51) International classification :A61M1/36
(31) Priority Document No :TN2011/0154
(32) Priority Date :31/03/2011
(33) Name of priority country :TUNISIA
(86) International Application No :PCT/TN2012/000001
Filing Date :22/03/2012
(87) International Publication No :WO 2012/134409
(61) Patent of Addition to Application Number :NA
Filing Date :NA
(62) Divisional to Application Number :NA
Filing Date :NA

(71)**Name of Applicant :**
1)BOU AKEZ Naoufel
Address of Applicant :16 Rue de lUniversit 2092 El Manar 1 TUNISIA
(72)**Name of Inventor :**
1)BOU AKEZ Naoufel

(57) Abstract :
The invention relates to an lment (12) for a bubble trap (4, 10) of an extracorporeal hemodialysis circuit (1). The lment comprises: a body defining a space inside the lment (12); an inner wall (14) separating the inner space of the lment (12) into first (15) and second (16) compartments; a pressure port (62) which can be connected to a pressure sensor, in order to measure the pressure inside the bubble trap (4, 10); and a discharge opening (63) for discharging clots (C) located in the bubble trap (4, 10). According to the invention, the pressure port (62) opens into the first compartment (15) of the lment (12), while the discharge ope - ning (63) opens into the second compartment (16) of the lment (12). In addition, the lment (12) includes an air intake (66) which is provided in the partition (22) and which opens into the second compartment (16) of the lment (12).

No. of Pages : 26 No. of Claims : 10

(12) PATENT APPLICATION PUBLICATION
(19) INDIA
(22) Date of filing of Application :17/10/2013
(21) Application No.8999/DELNP/2013 A
(43) Publication Date : 19/12/2014

(54) Title of the invention : ASSISTANCE FOR VIDEO CONTENT SEARCHES OVER A COMMUNICATION NETWORK

(51) International classification :G06F17/30
(31) Priority Document No :1154263
(32) Priority Date :17/05/2011
(33) Name of priority country :France
(86) International Application No :PCT/EP2012/057720
Filing Date :27/04/2012
(87) International Publication No :WO 2012/156193
(61) Patent of Addition to Application Number :NA
Filing Date :NA
(62) Divisional to Application Number :NA
Filing Date :NA

(71)**Name of Applicant :**
1)ALCATEL LUCENT
Address of Applicant :3 avenue Octave Grard F 75007 Paris France
(72)**Name of Inventor :**
1)SQUEDIN Sylvain
2)VANBELLE Alexandre

(57) Abstract :
A method for assisting video content searches over a communication network by a user, compris - ing: A step of determining a first content item (CZ) by said user; A step of automatically extracting semantic data from this first content item; A step of automatically generating queries for at least one service, as a function of semantic data, making it possible to retrieve a set of videos on this service or these services; A step of presenting that set of video content to the user.

No. of Pages : 20 No. of Claims : 9

(12) PATENT APPLICATION PUBLICATION
(19) INDIA
(22) Date of filing of Application :22/10/2013
(21) Application No.9086/DELNP/2013 A
(43) Publication Date : 19/12/2014

(54) Title of the invention : APPARATUS FOR MEASURING THE ELECTRICAL CONDUCTIVITY OF A LIQUID MEDIUM

(51) International classification	:G01N27/02,G01N27/04,G01N27/06
(31) Priority Document No	:10 2011 052 005.8
(32) Priority Date	:20/07/2011
(33) Name of priority country	:Germany
(86) International Application No	:PCT/EP2012/062278
Filing Date	:26/06/2012
(87) International Publication No	:WO 2013/010753
(61) Patent of Addition to Application Number	:NA
Filing Date	:NA
(62) Divisional to Application Number	:NA
Filing Date	:NA

(71)**Name of Applicant :**
1)OPTEK DANULAT GmbH
Address of Applicant :2 Emscherbruchallee 45356 Essen Germany
(72)**Name of Inventor :**
1)PLATTE Daniel
2)POHL Alfred

(57) Abstract :
An apparatus for measuring the electrical conductivity of a liquid, in particular aqueous, medium, having constant voltage means (18) which are connected to a first electrode arrangement (12) and are designed and connected to inject an alternating signal into the liquid medium, detection means (34) which are connected to a second electrode arrangement (14), in particular an electrode pair, which is separate from the first electrode arrangement and is coupled via the liquid medium, in particular in the manner of a four-pole configuration, and generate a measurement signal influenced by the electrical conductivity at a clock frequency (CLK) of the alternating signal, and evaluation means (26, 40) which generate an Output signal, in particular a conductivity signal of the liquid medium, from a current-proportional injection signal (U(l)) of the current injected into the liquid medium by the first electrode arrangement and the measurement signal (U(U)) and provide said Output signal for electronic further processing, is characterized in that the constant voltage means are formed in an individual circuit branch having commutator means (24) for the first electrode arrangement and non-reactive resistance means (20, 22) in a series circuit, wherein the current-proportional injection signal (U(l)) is tapped off as a voltage drop across the resistance means, in particular across a partial resistance (22) of the resistance means.

No. of Pages : 27 No. of Claims : 14

(12) PATENT APPLICATION PUBLICATION
(19) INDIA
(22) Date of filing of Application :21/10/2013
(21) Application No.9063/DELNP/2013 A
(43) Publication Date : 19/12/2014

(54) Title of the invention : SELECTIVELY LEACHED CUTTER

(51) International classification :E21B10/46
(31) Priority Document No :1106765.9
(32) Priority Date :20/04/2011
(33) Name of priority country :U.K.
(86) International Application No :PCT/US2012/034381
Filing Date :20/04/2012
(87) International Publication No :WO 2012/145586
(61) Patent of Addition to Application Number :NA
Filing Date :NA
(62) Divisional to Application Number :NA
Filing Date :NA

(71)**Name of Applicant :**
1)HALLIBURTON ENERGY SERVICES INC.
Address of Applicant :10200 Bellaire Boulevard Houston Texas 77072 U.S.A.
(72)**Name of Inventor :**
1)WHITTAKER Malcolm E.

(57) Abstract :
A method of manufacturing a polycrystalline diamond (PCD) cutting element used as drill bit cutting elements (10) is disclosed. The method comprises leaching a PCD body formed from diamond particles (202) using a binder catalyzing material so as to remove substantially all of the binder catalyzing material from portions of a cutting surface of the PCD body. A portion (24) of the cutting surface is identified as a cutting area which in use of the cutting element to cut material is heated by the cutting action of the cutting element. Leaching of the PCD body includes performing a relatively deep leach in the portion of the cutting surface identified as the cutting area and performing a relatively shallow leach in at least the portion (26) of the cutting surface surrounding the identified cutting area.

No. of Pages : 92 No. of Claims : 71

(12) PATENT APPLICATION PUBLICATION
(19) INDIA
(22) Date of filing of Application :22/10/2013
(21) Application No.9092/DELNP/2013 A
(43) Publication Date : 19/12/2014

(54) Title of the invention : MOTORCYCLE ENGINE LUBRICANT

(51) International classification	:C10M133/44,C10M133/46,C10M163/00
(31) Priority Document No	:61/482244
(32) Priority Date	:04/05/2011
(33) Name of priority country	:U.S.A.
(86) International Application No Filing Date	:PCT/US2012/034862 :25/04/2012
(87) International Publication No	:WO 2012/151084
(61) Patent of Addition to Application Number Filing Date	:NA :NA
(62) Divisional to Application Number Filing Date	:NA :NA

(71)**Name of Applicant :**
1)THE LUBRIZOL CORPORATION
Address of Applicant :29400 Lakeland Blvd. Wickliffe Ohio 44092 2298 U.S.A.
(72)**Name of Inventor :**
1)WILKES Mark F.

(57) Abstract :
A motorcycle having an engine and a clutch may be lubricated by supplying to the engine, but not to the clutch a lub - ricant of an oil of lubricating viscosity, an overbased detergent, a dispersant, a metal salt of a phosphorus acid, and a hydroxyalkyl- substituted imidazoline having a hydrocarbyl substituent of at least about 8 carbon atoms and a hydroxyalkyl substituent having 2 to 8 carbon atoms.

No. of Pages : 29 No. of Claims : 19

(12) PATENT APPLICATION PUBLICATION
(19) INDIA
(22) Date of filing of Application :22/10/2013
(21) Application No.9093/DELNP/2013 A
(43) Publication Date : 19/12/2014

(54) Title of the invention : ELASTOMER FIBERS AND METHODS OF MAKING AND USING THEREOF

(51) International classification :D01F6/70,D01F6/82,D01F8/14
(31) Priority Document No :61/475727
(32) Priority Date :15/04/2011
(33) Name of priority country :U.S.A.
(86) International Application No :PCT/US2012/032861
Filing Date :10/04/2012
(87) International Publication No :WO 2012/154364
(61) Patent of Addition to Application Number :NA
Filing Date :NA
(62) Divisional to Application Number :NA
Filing Date :NA

(71)**Name of Applicant :**
1)LUBRIZOL ADVANCED MATERIALS INC.
Address of Applicant :9911 Brecksville Road Cleveland Ohio 44141 3247 U.S.A.
(72)**Name of Inventor :**
1)VEDULA Ravi R.
2)LEE Mouh Wahng

(57) Abstract :
The invention relates to a fiber excellent in cool contact feeling which is excellent in hand and skin touch and capable of preventing unpleasant feeling in the wet state while also having excellent elasticity. The invention also relates to fabric clothing and underwear excellent in cool contact feeling and obtainable by using said fiber as well as the methods of making the fibers and articles thereof.

No. of Pages : 38 No. of Claims : 17

(12) PATENT APPLICATION PUBLICATION
(19) INDIA
(22) Date of filing of Application :22/10/2013
(21) Application No.9094/DELNP/2013 A
(43) Publication Date : 19/12/2014

(54) Title of the invention : SYSTEM AND METHOD FOR CRYOGENIC CONDENSING

(51) International classification :B01D5/00,B01D7/00,B01D8/00
(31) Priority Document No :61/498869
(32) Priority Date :20/06/2011
(33) Name of priority country :U.S.A.
(86) International Application No:PCT/US2012/043051
Filing Date :19/06/2012
(87) International Publication No :WO 2012/177584
(61) Patent of Addition to Application Number :NA
Filing Date :NA
(62) Divisional to Application Number :NA
Filing Date :NA

(71)**Name of Applicant :**
1)PRAXAIR TECHNOLOGY INC.
Address of Applicant :39 Old Ridgebury Road Danbury CT 06810 U.S.A.
(72)**Name of Inventor :**
1)CHENG Alan T.

(57) Abstract :
A method and apparatus for condensing vapor in a gas. A cryogen such as liquid nitrogen may be provided into first and second coil sets in a condenser housing to cool the condensable vapor in the housing to condense the vapor into a liquid or solid form. The flow of cryogen in the first and second coil sets may be independently controlled coils in the first and/or second coil sets may have a substantially equal length and/or coils in the first and/or second coil sets may have uppermost portions that are located at a substantially equal height.

No. of Pages : 23 No. of Claims : 13

(12) PATENT APPLICATION PUBLICATION
(19) INDIA
(22) Date of filing of Application :22/10/2013
(21) Application No.9095/DELNP/2013 A
(43) Publication Date : 19/12/2014

(54) Title of the invention : DEVICE AND METHOD FOR THE THERMAL COMPENSATION OF A WEAPON BARREL

(51) International classification :F41A27/30
(31) Priority Document No :10 2011 106 199.5
(32) Priority Date :07/06/2011
(33) Name of priority country :Germany
(86) International Application No :PCT/EP2012/060525
Filing Date :04/06/2012
(87) International Publication No :WO 2012/168200
(61) Patent of Addition to Application Number :NA
Filing Date :NA
(62) Divisional to Application Number :NA
Filing Date :NA

(71)**Name of Applicant :**
1)RHEINMETALL AIR DEFENCE AG
Address of Applicant :Birchstrasse 155 CH 8050 Z¼rich Switzerland
(72)**Name of Inventor :**
1)BRUNNER Dominic
2)MEIER Raffael

(57) Abstract :
The invention relates to a device and a method for the thermal compensation of a weapon barrel of a gun (10) comprising at least one weapon barrel (11) that is mounted in a cradle (3) and in a barrel support (4) as an extension of the cradle (3). Multiple temperature sensors (pl-pl6) are integrated in the cradle (3) and the barrel support (4). The sensors are connected to a data box (7) via data lines (6), and the data box (7) is connected to a data processing device (9). The data processing device (9) can act on actuators of the gun (10). The temperature of the cradle (3) and the barrel support (4) is measured by means of the temperature sensors (pl-pl6). Then, the temperature differences between the upper and lower sides and the right and left sides of the cradle (3) and of the barrel support (4) are ascertained. The barrel inclination is calculated from said values, and then a compensation for the barrel inclination is carried out by adjusting the alignment of the weapon barrel (11) in azimuth and/or elevation.

No. of Pages : 19 No. of Claims : 14

(12) PATENT APPLICATION PUBLICATION
(19) INDIA
(22) Date of filing of Application :15/10/2013
(21) Application No.8960/DELNP/2013 A
(43) Publication Date : 19/12/2014

(54) Title of the invention : TRANSISTORS

(51) International classification :H01L51/10
(31) Priority Document No :1106772.5
(32) Priority Date :21/04/2011
(33) Name of priority country :U.K.
(86) International Application No :PCT/GB2012/050869
Filing Date :20/04/2012
(87) International Publication No :WO 2012/143727
(61) Patent of Addition to Application Number :NA
Filing Date :NA
(62) Divisional to Application Number :NA
Filing Date :NA

(71)**Name of Applicant :**
1)CPI INNOVATION SERVICES LIMITED
Address of Applicant :The Wilton Centre Wilton Redcar Teesside TS10 4RF U.K.
(72)**Name of Inventor :**
1)OGIER Simon
2)PALUMBO Marco

(57) Abstract :
This invention comprises a field effect transistor which comprises source and drain electrodes (01) which are bridged by a semiconductor which comprises semiconducting crystallites the conductivity of the semiconductor being controlled by a gate electrode (02) which is insulated from the semiconductor and the source and drain electrodes to which a potential is applied for controlling the conductivity of the semiconductor in which at least part of the facing surfaces of the source and drain electrodes are geometrically formed such that they provide current flow of different directions between the electrodes through the said channel. By this means current is caused to flow through more orientations of the crystals resulting in greater uniformity of performance between different transistors when there is a degree of variable crystallographic orientation.

No. of Pages : 13 No. of Claims : 11

(12) PATENT APPLICATION PUBLICATION
(19) INDIA
(22) Date of filing of Application :15/10/2013
(21) Application No.8961/DELNP/2013 A
(43) Publication Date : 19/12/2014

(54) Title of the invention : AIRCRAFT ROTARY WING MOTION CONTROL AND INSTRUMENTED MOTION CONTROL FLUID DEVICE

(51) International classification :B64C27/51
(31) Priority Document No :61/473021
(32) Priority Date :07/04/2011
(33) Name of priority country :U.S.A.
(86) International Application No :PCT/US2012/032271
Filing Date :05/04/2012
(87) International Publication No :WO 2012/138830
(61) Patent of Addition to Application Number :NA
Filing Date :NA
(62) Divisional to Application Number :NA
Filing Date :NA

(71)**Name of Applicant :**
1)LORD CORPORATION
Address of Applicant :111 Lord Drive Attn: IP Legal Dept. 111 Lord Drive Cary North Carolina 27511 U.S.A.
(72)**Name of Inventor :**
1)JOLLY Mark
2)FUHRER Zachary
3)FOGLE Robert
4)CATANZARITE David

(57) Abstract :
An aircraft rotary wing motion control fluid device (200) providing motion control and with wireless sensing (260) of at least one fluid property inside the fluid device (200) is provided. The wireless sensing system (260) is integrated with at least one of the first (212) and second (214) aircraft rotary wing motion control fluid device bodies. The wireless sensing system (260) includes at least one fluid property sensor (105) in sensing proximity to the at least one fluid chamber (239) and a communications device for wirelessly conveying a measurement made by the at least one fluid property sensor (105) to a remote location.

No. of Pages : 24 No. of Claims : 21

(12) PATENT APPLICATION PUBLICATION
(19) INDIA
(22) Date of filing of Application :15/10/2013
(21) Application No.8962/DELNP/2013 A
(43) Publication Date : 19/12/2014

(54) Title of the invention : COMPRESSED AIR COUPLING

(51) International classification :F16L37/12,F16L37/42
(31) Priority Document No :11162404.5
(32) Priority Date :14/04/2011
(33) Name of priority country :EPO
(86) International Application No :PCT/EP2012/056781
Filing Date :13/04/2012
(87) International Publication No :WO 2012/140199
(61) Patent of Addition to Application Number :NA
Filing Date :NA
(62) Divisional to Application Number :NA
Filing Date :NA

(71)**Name of Applicant :**
1)CEJN AB
Address of Applicant :Box 245 S 541 25 Skvde Sweden
(72)**Name of Inventor :**
1)ENGDAHL Bjrn

(57) Abstract :
A female coupling half has two pawls (7) each with a distal detent (8) to engage the nipple (3) circumferential groove and a proximal rounded detent (15) which can lodge in either a rest closed position (16) for a closed valve (2) or a valve open position (17). The inserted nipple (3) moves the valve (2) which brings with it the pawls (7) via central projections (13) thereon and the manual sleeve (10) until the proximal rounded detent (15) lodges in its valve open position (17). Retraction of the sleeve (10) for release holds the nipple (3) in an intermediate pressure relief position until ejection pressure is no longer exerted on the nipple (3) and the sleeve (10) is allowed to spring out to its fully extended position completely releasing the nipple (3).

No. of Pages : 19 No. of Claims : 7

(12) PATENT APPLICATION PUBLICATION
(19) INDIA
(22) Date of filing of Application :15/10/2013
(21) Application No.8963/DELNP/2013 A
(43) Publication Date : 19/12/2014

(54) Title of the invention : SYSTEM AND METHOD FOR DISPLAYING AN IDENTIFIER OF A SOURCE ON A RECIPIENT DEVICE

(51) International classification :H04M1/57
(31) Priority Document No :2011033966
(32) Priority Date :12/05/2011
(33) Name of priority country :Singapore
(86) International Application No :PCT/SG2012/000163
Filing Date :09/05/2012
(87) International Publication No :WO 2012/154128
(61) Patent of Addition to Application Number :NA
Filing Date :NA
(62) Divisional to Application Number :NA
Filing Date :NA

(71)**Name of Applicant :**
1)SMART HUB PTE. LTD.
Address of Applicant :100 Beach Road #25 06 Shaw Towers Singapore 189702 Singapore
(72)**Name of Inventor :**
1)IBASCO Alex D.
2)JOSON Eduardo Ramon G.
3)YU William Emmanuel S.

(57) Abstract :
A system and method for displaying an identifier of a source on a recipient device in communication with the source the system comprising an association database defining at least one source associated with the recipient device; and a processing manager arranged to process communications from the source to the recipient device and arranged to access the association database to determine if the source is associated with the recipient device and if so to display an established identifier of the source otherwise to determine the privacy settings of the source and display a further identifier on the recipient device in accordance with the determined privacy settings is disclosed.

No. of Pages : 28 No. of Claims : 35

(12) PATENT APPLICATION PUBLICATION
(19) INDIA
(22) Date of filing of Application :21/10/2013
(21) Application No.9071/DELNP/2013 A
(43) Publication Date : 19/12/2014

(54) Title of the invention : MODULAR FIREARM

(51) International classification :F41A11/02,F41A21/00,F41C23/14
(31) Priority Document No :61/475149
(32) Priority Date :13/04/2011
(33) Name of priority country :U.S.A.
(86) International Application No :PCT/US2012/033220
Filing Date :12/04/2012
(87) International Publication No :WO 2013/002877
(61) Patent of Addition to Application Number :NA
Filing Date :NA
(62) Divisional to Application Number :NA
Filing Date :NA

(71)**Name of Applicant :**
1)COLT DEFENSE LLC
Address of Applicant :547 New Park Avenue West Hartford Connecticut 06110 U.S.A.
(72)**Name of Inventor :**
1)AUDIBERT Kevin
2)LANGEVIN Kevin

(57) Abstract :
A firearm having a lower receiver is provided. The receiver is adapted to couple with a plurality of upper receivers having different calibers. The lower receiver comprises a receiver extension having an opening therein. A spring is disposed within the opening. A buffer member is provided having a first portion having an end. The buffer member is coupled to the spring within the opening wherein the buffer member is movable between a first position where the end is within the opening and a second position wherein the end external to the opening.

No. of Pages : 73 No. of Claims : 20

(12) PATENT APPLICATION PUBLICATION
(19) INDIA
(22) Date of filing of Application :21/10/2013
(21) Application No.9072/DELNP/2013 A
(43) Publication Date : 19/12/2014

(54) Title of the invention : IMPROVED EXTRACTOR AND BOLT FOR A FIREARM

(51) International classification :F41C27/00,F41C27/06,F41A15/00
(31) Priority Document No :61/475487
(32) Priority Date :14/04/2011
(33) Name of priority country :U.S.A.
(86) International Application No :PCT/US2012/033509
Filing Date :13/04/2012
(87) International Publication No :WO 2012/142406
(61) Patent of Addition to Application Number :NA
Filing Date :NA
(62) Divisional to Application Number :NA
Filing Date :NA

(71)**Name of Applicant :**
1)COLT DEFENSE LLC
Address of Applicant :547 New Park Avenue West Hartford Connecticut 06110 1336 U.S.A.
(72)**Name of Inventor :**
1)LANGEVIN Kevin
2)HOCHSTRATE Paul M.

(57) Abstract :
A bolt for a firearm is provided herein the bolt having: an extractor pivotally mounted to the bolt for movement between at least a first position and a second position the extractor having a hook member located at a distal end of the extractor wherein the hook member is at least partially received within a pocket on a muzzle end of the bolt and the hook member moves away from a center line of the bolt as the hook member is moved from the first position towards the second position wherein a bottom of the pocket is recessed at least a first dimension within a first range A that is greater than 0.130 inches and less than 0.200 inches in a first direction from the muzzle end of the bolt and the hook member has an axial thickness parallel to the center line of the bolt within a first range A that is greater than 0.050 inches and less than 0.130 inches and wherein the hook member is flush with the muzzle end of the bolt when the hook member is in the second position.

No. of Pages : 15 No. of Claims : 20

(12) PATENT APPLICATION PUBLICATION
(19) INDIA
(22) Date of filing of Application :21/10/2013
(21) Application No.9073/DELNP/2013 A
(43) Publication Date : 19/12/2014

(54) Title of the invention : WASH SOLUTION AND METHOD FOR AFFINITY CHROMATOGRAPHY

(51) International classification :C07K1/22
(31) Priority Document No :61/492092
(32) Priority Date :01/06/2011
(33) Name of priority country :U.S.A.
(86) International Application No :PCT/EP2012/060313
Filing Date :31/05/2012
(87) International Publication No :WO 2012/164046
(61) Patent of Addition to Application Number :NA
Filing Date :NA
(62) Divisional to Application Number :NA
Filing Date :NA

(71)**Name of Applicant :**
1)NOVARTIS AG
Address of Applicant :Lichtstrasse 35 CH 4056 Basel Switzerland
(72)**Name of Inventor :**
1)FRAUENSCHUH Achim

(57) Abstract :
The invention provides a washing method for affinity chromatography in which a wash solution comprising arginine or an arginine derivative at pH greater than 8.0 is effective in removing impurities without the presence of a nonbuffering salt while simultaneously increasing product concentration in the eluate and maintaining a high percent yield of recovered product.

No. of Pages : 27 No. of Claims : 16

(12) PATENT APPLICATION PUBLICATION
(19) INDIA
(22) Date of filing of Application :21/10/2013
(21) Application No.9075/DELNP/2013 A
(43) Publication Date : 19/12/2014

(54) Title of the invention : SAFETY ANCHOR

(51) International classification :A62B35/04,A62B35/00
(31) Priority Document No :1104997.0
(32) Priority Date :25/03/2011
(33) Name of priority country :U.K.
(86) International Application No :PCT/EP2012/054284
Filing Date :12/03/2012
(87) International Publication No :WO 2012/130597
(61) Patent of Addition to Application Number :NA
Filing Date :NA
(62) Divisional to Application Number :NA
Filing Date :NA

(71)**Name of Applicant :**
1)CAPITAL SAFETY GROUP (NORTHERN EUROPE) LIMITED
Address of Applicant :5 Merse Road Moons Moat North Industrial Estate Redditch Worcestershire B98 9HL U.K.
(72)**Name of Inventor :**
1)HIRST Robert

(57) Abstract :
A safety anchor includes a coiled spring (5) and a stud (1) extending substantially centrally within the spring. The stud (1) is formed with a portion (3) of reduced strength. Means (7 9) is provided for securing ends of the spring (5) to the stud (1) at each side of the portion (3) of reduced strength.

No. of Pages : 14 No. of Claims : 27

(12) PATENT APPLICATION PUBLICATION
(19) INDIA
(22) Date of filing of Application :21/10/2013
(21) Application No.9077/DELNP/2013 A
(43) Publication Date : 19/12/2014

(54) Title of the invention : HIGH POWER SPUTTERING SOURCE

(51) International classification :H01J37/34,C23C14/34
(31) Priority Document No :10 2011 018 363.9
(32) Priority Date :20/04/2011
(33) Name of priority country :Germany
(86) International Application No :PCT/EP2012/001414
Filing Date :30/03/2012
(87) International Publication No :WO 2012/143087
(61) Patent of Addition to Application Number :NA
Filing Date :NA
(62) Divisional to Application Number :NA
Filing Date :NA

(71)**Name of Applicant :**
1)OERLIKON TRADING AG TRBBACH
Address of Applicant :Hauptstrasse 53 CH 9477 Tr¼bbach Switzerland
(72)**Name of Inventor :**
1)KRASSNITZER Siegfried
2)RUHM Kurt

(57) Abstract :
The invention relates to a magnetron sputtering process that allows material to be sputtered from a target surface in such a way that a high percentage of the sputtered material is provided in the form of ions. According to the invention, said aim is achieved using a simple generator, the power of which is fed to multiple magnetron sputtering sources spread out over several time intervals, i.e. the maximum power is supplied to one sputtering source during one time interval, and the maximum power is supplied to the following sputtering source in the subsequent time interval, such that discharge current densities of more than 0.2A/cm 2 are obtained. The sputtering target can cool down during the off time, thus preventing the temperature limit from being exceeded.

No. of Pages : 18 No. of Claims : 5

(12) PATENT APPLICATION PUBLICATION
(19) INDIA
(22) Date of filing of Application :18/10/2013
(21) Application No.9025/DELNP/2013 A
(43) Publication Date : 19/12/2014

(54) Title of the invention : METHODS FOR RECOVERING HYDROGEN FROM ISOMERIZING AND REFORMING OF HYDROCARBONS

(51) International classification :C07C5/13,C10G35/09
(31) Priority Document No :NA
(32) Priority Date :NA
(33) Name of priority country :NA
(86) International Application No :PCT/US2011/048480
Filing Date :19/08/2011
(87) International Publication No :WO 2013/028160
(61) Patent of Addition to Application Number :NA
Filing Date :NA
(62) Divisional to Application Number :NA
Filing Date :NA

(71)**Name of Applicant :**
1)UOP LLC
Address of Applicant :25 East Algonquin Road Des Plaines Illinois 60017 U.S.A.
(72)**Name of Inventor :**
1)SCHECTERLE David James
2)YANEZ William

(57) Abstract :
Embodiments of methods for recovering hydrogen from isomerizing and reforming of hydrocarbons are provided. The method comprises the steps of combining a HCl scrubbed isomerization zone net gas stream that comprises hydrogen and C hydrocarbons with a reforming zone net gas stream that comprises hydrogen and C hydrocarbons to form a combined net gas stream that comprises hydrogen and light end hydrocarbons. The light end hydrocarbons are extracted from the combined net gas stream in a re contacting zone using a reforming zone product stream that comprises C+ hydrocarbons to form a hydrogen rich net gas stream.

No. of Pages : 22 No. of Claims : 20

(12) PATENT APPLICATION PUBLICATION
(19) INDIA
(22) Date of filing of Application :18/10/2013
(21) Application No.9026/DELNP/2013 A
(43) Publication Date : 19/12/2014

(54) Title of the invention : LINEAR ACTUATOR SYSTEM WITH MEANS FOR FIRE DETECTION

(51) International classification :H05K1/02
(31) Priority Document No :PA 2011 00405
(32) Priority Date :27/05/2011
(33) Name of priority country :Denmark
(86) International Application No :PCT/DK2012/000061
Filing Date :25/05/2012
(87) International Publication No :WO 2012/163353
(61) Patent of Addition to Application Number :NA
Filing Date :NA
(62) Divisional to Application Number :NA
Filing Date :NA

(71)**Name of Applicant :**
1)LINAK A/S
Address of Applicant :Smedev¦get 8 Guderup DK 6430 Nordborg Denmark
(72)**Name of Inventor :**
1)JEPPE Christian Bastholm

(57) Abstract :
A linear actuator system comprising at least one linear actuator a power supply a control and an operation device. The linear actuator system comprises at least one printed circuit board having multiple layers comprising an electrically conductive circuit. At least one of the layers of the printed circuit board is designed as a detection layer for detecting a leakage current in the electrical circuit including the electronic components mounted on the printed circuit board. An output voltage is applied to the detection layer said voltage falling outside of the voltage range in which the electrical circuit works.

No. of Pages : 21 No. of Claims : 11

(12) PATENT APPLICATION PUBLICATION
(19) INDIA
(22) Date of filing of Application :18/10/2013
(21) Application No.9027/DELNP/2013 A
(43) Publication Date : 19/12/2014

(54) Title of the invention : SYSTEM AND APPARATUS FOR LOCATING FAULTS IN A CABLE NETWORK

(51) International classification :H04B10/08,G01R31/08
(31) Priority Document No :2011901026
(32) Priority Date :21/03/2011
(33) Name of priority country :Australia
(86) International Application No :PCT/AU2012/000294
Filing Date :21/03/2012
(87) International Publication No :WO 2012/126056
(61) Patent of Addition to Application Number :NA
Filing Date :NA
(62) Divisional to Application Number :NA
Filing Date :NA

(71)**Name of Applicant :**
1)KAELUS PTY LTD
Address of Applicant :34 Corporate Drive Cannon Hill Queensland 4170 Australia
(72)**Name of Inventor :**
1)STRACHAN Frank
2)HORSFIELD Brendan
3)DELFORCE Greg
4)DAVIES Ian

(57) Abstract :
A range to fault (RTF) module (100) for use in a system for locating faults in a cable network is discussed. The module includes an input port (101) for coupling the module to a PIM analyser. The module (100) also includes an output port (102) for connection to the device under test (DUT). In addition to the input (101) and output (102) ports the module is provided with a monitor port (103) for receipt of a PIM signal from the PIM analyser. The module in this instance also includes two USB ports (104a) (104b) enabling a serial connection between the PIM analyser and the module (100).

No. of Pages : 62 No. of Claims : 39

(12) PATENT APPLICATION PUBLICATION
(19) INDIA
(22) Date of filing of Application :18/10/2013
(21) Application No.9028/DELNP/2013 A
(43) Publication Date : 19/12/2014

(54) Title of the invention : PROCESS AND APPARATUS FOR RECOVERING HYDROPROCESSED HYDROCARBONS WITH TWO STRIPPERS IN SERIES

(51) International classification :C10G69/02,C10G11/00,C10G9/00
(31) Priority Document No :13/213205
(32) Priority Date :19/08/2011
(33) Name of priority country :U.S.A.
(86) International Application No :PCT/US2012/051128
Filing Date :16/08/2012
(87) International Publication No :WO 2013/028454
(61) Patent of Addition to Application Number :NA
Filing Date :NA
(62) Divisional to Application Number :NA
Filing Date :NA

(71)**Name of Applicant :**
1)UOP LLC
Address of Applicant :25 East Algonquin Road P. O. Box 5017 Des Plaines Illinois 60017 5017 U.S.A.
(72)**Name of Inventor :**
1)HOEHN Richard K.
2)MURTY Vedula K.

(57) Abstract :
A process and apparatus are disclosed for recovering hydroprocessing effluent from a hydroprocessing unit utilizing a hot stripper and a cold stripper. A net overhead stream from the hot stripper is forwarded to the cold stripper for further stripping. The invention is particularly suitable for hydrotreating residue feed streams. The hot stripped stream may be subjected to fluid catalytic cracking. The apparatus and process eliminate the need for a fired heater in the product recovery unit.

No. of Pages : 28 No. of Claims : 10

(12) PATENT APPLICATION PUBLICATION
(19) INDIA
(22) Date of filing of Application :18/10/2013
(21) Application No.9029/DELNP/2013 A
(43) Publication Date : 19/12/2014

(54) Title of the invention : PROCESS AND APPARATUS FOR RECOVERING HYDROPROCESSED HYDROCARBONS WITH TWO STRIPPERS

(51) International classification	:C10G69/02,C10G7/00,C10G11/00
(31) Priority Document No	:13/213310
(32) Priority Date	:19/08/2011
(33) Name of priority country	:U.S.A.
(86) International Application No	:PCT/US2012/050513
Filing Date	:13/08/2012
(87) International Publication No	:WO 2013/028379
(61) Patent of Addition to Application Number	:NA
Filing Date	:NA
(62) Divisional to Application Number	:NA
Filing Date	:NA

(71)**Name of Applicant :**
1)UOP LLC
Address of Applicant :25 East Algonquin Road P. O. Box 5017 Des Plaines Illinois 60017 5017 U.S.A.
(72)**Name of Inventor :**
1)HOEHN Richard K.
2)BOWMAN David M.
3)ZHU Xin X.

(57) Abstract :
A process and apparatus are disclosed for recovering hydroprocessing effluent from a hydroprocessing unit utilizing a hot stripper and a cold stripper. Only the hot hydroprocessing effluent is heated in a fired heater prior to product fractionation resulting in substantial operating and capital savings.

No. of Pages : 32 No. of Claims : 10

(12) PATENT APPLICATION PUBLICATION
(19) INDIA
(22) Date of filing of Application :22/10/2013
(21) Application No.9102/DELNP/2013 A
(43) Publication Date : 19/12/2014

(54) Title of the invention : ACTUATION AND VALVE MECHANISM

(51) International classification :F16K31/44,B66F11/00,E02B9/06
(31) Priority Document No :2011901214
(32) Priority Date :01/04/2011
(33) Name of priority country :Australia
(86) International Application No :PCT/AU2012/000328
Filing Date :30/03/2012
(87) International Publication No :WO 2012/129609
(61) Patent of Addition to Application Number :NA
Filing Date :NA
(62) Divisional to Application Number :NA
Filing Date :NA

(71)**Name of Applicant :**
1)RUBICON RESEARCH PTY LTD
Address of Applicant :1 Cato Street Hawthorn Victoria 3122 Australia
(72)**Name of Inventor :**
1)AUGHTON David John

(57) Abstract :
The invention provides a cable drive device (10) including a linear drive member (12), and a cable drum (14) attached to a support bracket (30, 32) adapted to be affixed to a surface. The cable drum (14) has an axle (26) supported by the support bracket (30, 32) to allow rotation of the cable drum (14). The cable drum (14) has a cable (42) affixed at either end of said linear drive member (12) and tautly wrapped around the cable drum (14). The cable drum (14) is located between the ends of the linear drive member (12) to, in use, allow the linear drive member (12) to e guided through the bracket (30, 32) to move the linear drive member (12) longitudinally when the axle (26) is rotated.

No. of Pages : 54 No. of Claims : 29

(12) PATENT APPLICATION PUBLICATION
(19) INDIA
(22) Date of filing of Application :21/10/2013
(21) Application No.9079/DELNP/2013 A
(43) Publication Date : 19/12/2014

(54) Title of the invention : BONE GRAFT SHAPER

(51) International classification :A61B17/15
(31) Priority Document No :13/077196
(32) Priority Date :31/03/2011
(33) Name of priority country :U.S.A.
(86) International Application No :PCT/US2012/029040
Filing Date :14/03/2012
(87) International Publication No :WO 2012/134819
(61) Patent of Addition to Application Number :NA
Filing Date :NA
(62) Divisional to Application Number :NA
Filing Date :NA

(71)**Name of Applicant :**
1)DEPUY SYNTHES PRODUCTS LLC
Address of Applicant :325 Paramount Drive Raynham MA 02767 0350 U.S.A.
(72)**Name of Inventor :**
1)ANTHONY Sarah M.
2)IANNOTTI Joseph P.
3)LAPPIN Kyle E.
4)STONE Matthew T.
5)SURMA Joanna L.
6)WARLOP David M.

(57) Abstract :
A bone graft shaper for shaping bone graft. The bone graft shaper includes a first holder having at least one shaped slot and a second holder coupled to the first holder such that the first and second holder are sized and shaped to grasp the bone graft. A cutting guide is also included and has at least one slot. The cutting guide is coupled to one of the first holder and the second holder. The bone graft shaper also includes a bone saw sized and shaped to fit within at least one of the shaped slot and the cutting guide slot.

No. of Pages : 23 No. of Claims : 20

(12) PATENT APPLICATION PUBLICATION
(19) INDIA
(22) Date of filing of Application :21/10/2013
(21) Application No.9080/DELNP/2013 A
(43) Publication Date : 19/12/2014

(54) Title of the invention : POLYCHLOROPRENE SOLID HAVING THIXOTROPIC PROPERTIES

(51) International classification :C08F36/18,C08C1/15,C08L11/00
(31) Priority Document No :11163557.9
(32) Priority Date :21/04/2011
(33) Name of priority country :EPO
(86) International Application No :PCT/EP2012/056958
Filing Date :17/04/2012
(87) International Publication No :WO 2012/143336
(61) Patent of Addition to Application Number :NA
Filing Date :NA
(62) Divisional to Application Number :NA
Filing Date :NA

(71)**Name of Applicant :**
1)LANXESS DEUTSCHLAND GMBH
Address of Applicant :Kennedyplatz 1 50569 Kln Germany
(72)**Name of Inventor :**
1)NEUNER Thomas Oliver
2)STANGE Heiner
3)JOSTEN Rolf
4)FELLER Rolf
5)FIDAN Mesut

(57) Abstract :
The invention relates to a polychloroprene solid on the basis of a polychloroprene dispersion, said solid having thixotropic properties.

No. of Pages : 20 No. of Claims : 30

(12) PATENT APPLICATION PUBLICATION
(19) INDIA
(22) Date of filing of Application :21/10/2013
(21) Application No.9081/DELNP/2013 A
(43) Publication Date : 19/12/2014

(54) Title of the invention : HYDROGEN GENERATOR WITH IMPROVED VOLUME EFFICIENCY

(51) International classification :H01M8/06,H01M8/04,C01B6/04
(31) Priority Document No :61/477641
(32) Priority Date :21/04/2011
(33) Name of priority country :U.S.A.
(86) International Application No :PCT/US2012/033168
Filing Date :12/04/2012
(87) International Publication No :WO 2012/145211
(61) Patent of Addition to Application Number :NA
Filing Date :NA
(62) Divisional to Application Number :NA
Filing Date :NA

(71)**Name of Applicant :**
1)EVEREADY BATTERY COMPANY INC.
Address of Applicant :533 Maryville University Drive St. Louis Missouri 63141 U.S.A.
(72)**Name of Inventor :**
1)ZHENG Guanghong
2)STIMITS Jason L.

(57) Abstract :
A hydrogen generator with improved volume efficiency and a method of producing hydrogen gas with the hydrogen generator are dis closed. A fluid containing a reactant is transported from a reactant storage area to a reaction area. Hydrogen gas and an effluent pass from the reaction area into the effluent storage area that is in a volume exchanging relationship with one or both of the reactant storage area and the reaction area. An ini tially compressed filter is disposed in the effluent storage area to remove solids from the hydrogen gas. The filter is attached to a moveable partition separating the effluent storage area from the reactant storage area and/or the reaction area, and the filter expands as the volume of the effluent storage area increases.

No. of Pages : 35 No. of Claims : 24

(12) PATENT APPLICATION PUBLICATION
(19) INDIA
(22) Date of filing of Application :21/10/2013
(21) Application No.9082/DELNP/2013 A
(43) Publication Date : 19/12/2014

(54) Title of the invention : FLUIDIZED BED METHOD AND SYSTEM FOR GAS COMPONENT CAPTURE

(51) International classification :B01D53/06
(31) Priority Document No :61/474103
(32) Priority Date :11/04/2011
(33) Name of priority country :U.S.A.
(86) International Application No :PCT/US2012/033016
Filing Date :11/04/2012
(87) International Publication No :WO 2012/142084
(61) Patent of Addition to Application Number :NA
Filing Date :NA
(62) Divisional to Application Number :NA
Filing Date :NA

(71)**Name of Applicant :**
1)ADA ES INC.
Address of Applicant :9135 S. Ridgeline Blvd. Suite 200 Highlands Ranch CO 80129 U.S.A.
(72)**Name of Inventor :**
1)KRUTKA Holly
2)WILSON Cody
3)STARNS Travis

(57) Abstract :
The present disclosure is directed to a process that allows dry sorbents to remove a target constituent, such as carbon o dioxide (C02), from a gas stream. A staged fluidized bed separator enables gas and sorbent to move in opposite directions. The sorbent is loaded with target constituent in the separator. It is then transferred to a regenerator where the target constituent is stripped. The temperature of the separator and regenerator are controlled. After it is removed from the regenerator, the sorbent is then transferred back to the separator.

No. of Pages : 37 No. of Claims : 22

(12) PATENT APPLICATION PUBLICATION
(19) INDIA
(22) Date of filing of Application :22/10/2013

(21) Application No.9083/DELNP/2013 A
(43) Publication Date : 19/12/2014

(54) Title of the invention : POLYPROPYLENE COMPOSITION FOR EXTRUSION BLOWN MOULDED BOTTLES

(51) International classification :C08L23/14,C08F297/08,C08F2/00
(31) Priority Document No :11159996.5
(32) Priority Date :28/03/2011
(33) Name of priority country :EPO
(86) International Application No :PCT/EP2012/055302
Filing Date :26/03/2012
(87) International Publication No :WO 2012/130793
(61) Patent of Addition to Application Number :NA
Filing Date :NA
(62) Divisional to Application Number :NA
Filing Date :NA

(71)**Name of Applicant :**
1)BOREALIS AG
Address of Applicant :Wagramerstrasse 17 19 A 1220 Vienna Austria
(72)**Name of Inventor :**
1)KLIMKE Katja
2)DOSHEV Petar
3)BERNREITNER Klaus
4)MATTHIJS Dirk
5)LATVAKANGAS Timo

(57) Abstract :
Polypropylene composition comprisinga heterophasic propylene copolymerand a polyethylene said heterophasic propylene copolymer comprises a matrix comprising a random propylene copolymer and an elastomeric propylene copolymerbeing dispersed in said matrix wherein furthersaid heterophasic propylene copolymer isa nucleated andhas a melt flow rate in the range of equal or more than 0.5 to equal or below 6.0g/10min.

No. of Pages : 44 No. of Claims : 14

(12) PATENT APPLICATION PUBLICATION
(19) INDIA
(22) Date of filing of Application :22/10/2013
(21) Application No.9084/DELNP/2013 A
(43) Publication Date : 19/12/2014

(54) Title of the invention : METHOD FOR PRODUCING 2-CHLOROALLYL THIOCYANATE AND 2-CHLOROALLYL ISOTHIOCYANATE

(51) International classification :C07C331/22
(31) Priority Document No :11163718.7
(32) Priority Date :26/04/2011
(33) Name of priority country :EPO
(86) International Application No :PCT/EP2012/057431
Filing Date :24/04/2012
(87) International Publication No :WO 2012/146569
(61) Patent of Addition to Application Number :NA
Filing Date :NA
(62) Divisional to Application Number :NA
Filing Date :NA

(71)**Name of Applicant :**
1)BAYER INTELLECTUAL PROPERTY GMBH
Address of Applicant :Alfred Nobel Str. 10 40789 Monheim Germany
(72)**Name of Inventor :**
1)HIMMLER Thomas
2)DECKER Matthias
3)DUNKEL Ralf
4)GERDES Peter
5)LITTMANN Martin
6)LUI Norbert
7)SCHNATTERER Albert

(57) Abstract :
The invention relates to a method for producing 2-chloroallyl isothiocyanate from 2,3-dichloro-l-propene, wherein the 2,3-dichloro-l-propene is reacted with a thiocyanate in the presence of a phase-transfer catalyst, without diluent or in the presence of up to 15 weight percent relative to 2,3-dichloropropene and simultaneously in the presence of an excess of 10 to 200 mole percent of 2,3-dichloro-l-propene relative to the thiocyanate. The invention further relates to a method proceeding from 1,2,3- trichlorpropane.

No. of Pages : 13 No. of Claims : 6

(12) PATENT APPLICATION PUBLICATION
(19) INDIA
(22) Date of filing of Application :18/10/2013
(21) Application No.9040/DELNP/2013 A
(43) Publication Date : 19/12/2014

(54) Title of the invention : ROTOR FOR ROTATING ELECTRICAL MACHINE ROTATING ELECTRIC MACHINE AND METHOD FOR PRODUCING ROTOR FOR ROTATING ELECTRICAL MACHINE

(51) International classification :H02K1/27
(31) Priority Document No :NA
(32) Priority Date :NA
(33) Name of priority country :NA
(86) International Application No :PCT/JP2011/063245
Filing Date :09/06/2011
(87) International Publication No :WO 2012/169043
(61) Patent of Addition to Application Number :NA
Filing Date :NA
(62) Divisional to Application Number :NA
Filing Date :NA

(71)**Name of Applicant :**
1)TOYOTA JIDOSHA KABUSHIKI KAISHA
Address of Applicant :1Toyota choToyota shi Aichi 4718571 Japan
(72)**Name of Inventor :**
1)YAMAGISHI Yoshitada
2)WATANABE Yuta

(57) Abstract :
Provided is a rotor for a rotating electrical machine which is capable of minimizing increases in eddy current losses via a magnet, while making insulating film processing of the surface of the magnet unnecessary. The rotor for the rotating electrical machine includes: a rotor core having a magnet insertion hole formed inside by drawing; a magnet inserted in the magnet insertion hole; and an insulating filler which is filled between the inner wall of the magnet insertion hole and the magnet so as to secure the magnet. The magnet is secured by the filler in such a manner that the surface of the magnet inside the magnet insertion hole i s in an inclined position with respect to the drawing direction of the inner wall of the magnet insertion hole.

No. of Pages : 38 No. of Claims : 10

(12) PATENT APPLICATION PUBLICATION
(19) INDIA
(22) Date of filing of Application :18/10/2013
(21) Application No.9041/DELNP/2013 A
(43) Publication Date : 19/12/2014

(54) Title of the invention : USE OF ENCAPSULATED NITRATES AND SULFATES TO REDUCE METHANE EMISSION DERIVED FROM RUMINAL FERMENTATION

(51) International classification :A23K1/175,A23K1/18
(31) Priority Document No :PI11022841
(32) Priority Date :23/05/2011
(33) Name of priority country :Brazil
(86) International Application No :PCT/BR2012/000157
Filing Date :23/05/2012
(87) International Publication No :WO 2012/159186
(61) Patent of Addition to Application Number :NA
Filing Date :NA
(62) Divisional to Application Number :NA
Filing Date :NA

(71)**Name of Applicant :**
1)GRASP INDšSTRIA E COM‰RCIO LTDA.
Address of Applicant :Rua Doutor Libanio Estanislau Cardoso N. 304 CIC 81460 065 Curitiba | Paran¡ Brazil
(72)**Name of Inventor :**
1)PEGORARO Alysson Hoffmann
2)ARAUJO Rafael Canonenco de

(57) Abstract :
Nutritional additives and supplements in a granular shape for ruminants containing nitrates and sulfates encapsulated with vegetable fats in order to allow a slow release in the rumen being used to reduce methane emission.

No. of Pages : 59 No. of Claims : 9

(12) PATENT APPLICATION PUBLICATION
(19) INDIA
(22) Date of filing of Application :22/10/2013
(21) Application No.9110/DELNP/2013 A
(43) Publication Date : 19/12/2014

(54) Title of the invention : DEVICE SYSTEM AND METHOD FOR ACCESSING INTERNET WEB PAGE

(51) International classification :H04L29/06
(31) Priority Document No :201110070193.4
(32) Priority Date :23/03/2011
(33) Name of priority country :China
(86) International Application No :PCT/CN2011/083807
Filing Date :12/12/2011
(87) International Publication No :WO 2012/126263
(61) Patent of Addition to Application Number :NA
Filing Date :NA
(62) Divisional to Application Number :NA
Filing Date :NA

(71)**Name of Applicant :**
1)TENCENT TECHNOLOGY (SHENZHEN) COMPANY LIMITED
Address of Applicant :4/F. East 2 Block. SEG Park Zhenxing Rd. Futian District Shenzhen Guangdong 518044 China
(72)**Name of Inventor :**
1)HU Peng
2)ZHANG Zijun
3)GE Wenbing

(57) Abstract :
The present invention discloses an apparatus, system and method for accessing internet webpage. The system includes a user terminal and a proxy server. The user terminal is configured to initiate an access request to the proxy server, the access request including URL information of a target webpage which carries an identifier of requiring security authentication, and receive and display target webpage information outputted from the proxy server. The proxy server is configured to receive the access request, perform security authentication on the URL information of the target webpage which carries the identifier of requiring security authentication according to pre-stored webpage security database information; if the security authentication is passed, obtain the target webpage information and output the target webpage information to the user terminal. By applying the present invention, network delay overload for accessing the internet webpage can be reduced, and user experience can be improved.

No. of Pages : 25 No. of Claims : 15

(12) PATENT APPLICATION PUBLICATION
(19) INDIA
(22) Date of filing of Application :22/10/2013
(21) Application No.9113/DELNP/2013 A
(43) Publication Date : 19/12/2014

(54) Title of the invention : WINDSCREEN WIPER DEVICE

(51) International classification :B60S1/38
(31) Priority Document No :NA
(32) Priority Date :NA
(33) Name of priority country :NA
(86) International Application No :PCT/EP2011/055841
Filing Date :13/04/2011
(87) International Publication No :WO 2012/139643
(61) Patent of Addition to Application Number :NA
Filing Date :NA
(62) Divisional to Application Number :NA
Filing Date :NA

(71)**Name of Applicant :**
1)FEDERAL MOGUL S.A.
Address of Applicant :Avenue Champion B 6790 Aubange Belgium
(72)**Name of Inventor :**
1)BOLAND Xavier

(57) Abstract :
A windscreen wiper device comprising an elongated wiper blade (2) including opposing longitudinal grooves (3) on its longitudinal sides in which grooves spaced apart longitudinal strips (4) are disposed wherein neighbouring ends o said longitudinal strips are interconnected by a respective connecting piece (6) which windscreen wiper device comprises a connecting device (7) for an oscillating wiper arm (8) wherein at least one connecting piece comprises engaging members (13) engaging around the longitudinal strips wherein said strips and said connecting piece are slidably connected by means of a snap connection with the special feature that at least one pin (18) extending in a direction perpendicular to the windscreen to be wiped engages said wiper blade at a location of a hole (16) in one of said longitudinal strips wherein said pin is arranged to block a longitudinal movement of said wiper blade relative said strip in a longitudinal direction thereof away from said connecting piece

No. of Pages : 24 No. of Claims : 13

(12) PATENT APPLICATION PUBLICATION
(19) INDIA
(22) Date of filing of Application :18/10/2013
(21) Application No.9033/DELNP/2013 A
(43) Publication Date : 19/12/2014

(54) Title of the invention : SYSTEM FOR CONVEYING A FLUID

(51) International classification :F02M37/04,F02D41/30,F02M39/00
(31) Priority Document No :10 2011 076 063.6
(32) Priority Date :18/05/2011
(33) Name of priority country:Germany
(86) International Application No :PCT/EP2012/055365
Filing Date :27/03/2012
(87) International Publication No :WO 2012/156138
(61) Patent of Addition to Application Number :NA
Filing Date :NA
(62) Divisional to Application Number :NA
Filing Date :NA

(71)**Name of Applicant :**
1)ROBERT BOSCH GMBH
Address of Applicant :Postfach 30 02 20 70442 Stuttgart Germany
(72)**Name of Inventor :**
1)BOECKING Friedrich

(57) Abstract :
The invention relates to a system (46), in particular for a motor vehicle, for conveying a fluid, in particular a fuel, such as diesel, having a high pressure pump (1), a pre-feed pump (35) for conveying the fluid to the high pressure pump (1) and a device (35) for controlling the conveying power, the high pressure pump (1), comprising a drive shaft (2) having at least one cam (3), at least one piston (5), at least one cylinder (6) for mounting the at least one piston (5), an operating chamber (29), wherein the at least one piston (5) is indirectly supported by at least one roller (10) on the drive shaft (2) having the at least one cam (3), so that a translational movement due to a rotational movement of the drive shaft (2) can be carried out by the at least one piston (5), wherein the device (35) is the pre-feed pump (35) and the conveying power of the pre-feed pump (35) can be controlled.

No. of Pages : 16 No. of Claims : 12

(12) PATENT APPLICATION PUBLICATION
(19) INDIA
(22) Date of filing of Application :18/10/2013
(21) Application No.9035/DELNP/2013 A
(43) Publication Date : 19/12/2014

(54) Title of the invention : ANALYSING VITAMIN D METABOLITES IN DRIED BLOOD

(51) International classification :G01N33/82
(31) Priority Document No :102011001790.9
(32) Priority Date :04/04/2011
(33) Name of priority country :Germany
(86) International Application No :PCT/EP2012/056204
Filing Date :04/04/2012
(87) International Publication No :WO 2012/136720
(61) Patent of Addition to Application Number :NA
Filing Date :NA
(62) Divisional to Application Number :NA
Filing Date :NA

(71)**Name of Applicant :**
1)IMMUNDIAGNOSTIK AG
Address of Applicant :Stubenwald Alle 8a 64625 Bensheim Germany
(72)**Name of Inventor :**
1)ARMBRUSTER Franz Paul
2)GR–N Hans J¼rgen
3)SCHUMANN Claudia

(57) Abstract :
The invention relates to a method and a test kit for quantitatively analysing vitamin D metabolites in blood, a defined amount of blood being immobilised on a solid Sorption material prior to analysis. As a result, a haemolysis of the blood has no impact on the analysis of the vitamin D metabolites. For the quantitative analysis, the dried blood spot on the Sorption material is solubilized using a detergent-containing aqueous solvent buffer, pH 7.0 to 10.0, and the vitamin D metabolites are eluted with a protic-organic Solution that has a permittivity of less than 35. The eluate is analysed for vitamin D metabolites in the Standard way.

No. of Pages : 28 No. of Claims : 12

(12) PATENT APPLICATION PUBLICATION
(19) INDIA
(22) Date of filing of Application :18/10/2013
(21) Application No.9036/DELNP/2013 A
(43) Publication Date : 19/12/2014

(54) Title of the invention : ABSORBENT ARTICLE WITH LEG GASKETING CUFF

(51) International classification :A61F13/494
(31) Priority Document No :61/480663
(32) Priority Date :29/04/2011
(33) Name of priority country :U.S.A.
(86) International Application No :PCT/US2012/035331
Filing Date :27/04/2012
(87) International Publication No :WO 2012/149238
(61) Patent of Addition to Application Number :NA
Filing Date :NA
(62) Divisional to Application Number :NA
Filing Date :NA

(71)**Name of Applicant :**
1)THE PROCTER & GAMBLE COMPANY
Address of Applicant :One Procter & Gamble Plaza Cincinnati Ohio 45202 U.S.A.
(72)**Name of Inventor :**
1)RAYCHECK Jeromy Thomas
2)GOODLANDER Lisa Jane
3)GRINKEMEYER Lisa Maria
4)MOSMAN Jessica Lee
5)NAYLOR Jason Edward
6)PHILLIPS LeAnn Nichole

(57) Abstract :
A disposable absorbent article may include a topsheet, a backsheet, an absorbent core disposed between the topsheet and the backsheet, and a leg gasketing system. The leg gasketing system may include an inner cuff and an outer cuff; the inner cuff may include an inner cuff folded edge and an inner cuff material edge and the outer cuff may include an outer cuff folded edge and an outer cuff material edge such that the web of material is folded laterally inward to form the outer cuff folded edge and folded later ally outward to form the inner cuff material edge.

No. of Pages : 48 No. of Claims : 15

(12) PATENT APPLICATION PUBLICATION
(19) INDIA
(22) Date of filing of Application :22/10/2013
(21) Application No.9120/DELNP/2013 A
(43) Publication Date : 19/12/2014

(54) Title of the invention : ROTORS FORMED USING INVOLUTE CURVES

(51) International classification :F16H1/24,F03C2/08,F04C2/08
(31) Priority Document No :61/477469
(32) Priority Date :20/04/2011
(33) Name of priority country :U.S.A.
(86) International Application No :PCT/CA2012/050257
Filing Date :20/04/2012
(87) International Publication No :WO 2012/142714
(61) Patent of Addition to Application Number :NA
Filing Date :NA
(62) Divisional to Application Number :NA
Filing Date :NA

(71)**Name of Applicant :**
1)EXPONENTIAL TECHNOLOGIES INC.
Address of Applicant :Bay #104 512 Moraine Road NE Calgary Alberta T2A 2P2 Canada
(72)**Name of Inventor :**
1)PATTERSON Curtis
2)JUAN Alejandro
3)GOTTFRIED Kristjan

(57) Abstract :
The present disclosure describes the use of involute curves for use in energy conversion devices, as well as timing or indexing gears. Several different embodiments are shown using rotors of several examples of lobe numbers and shapes.

No. of Pages : 59 No. of Claims : 21

(12) PATENT APPLICATION PUBLICATION
(19) INDIA
(22) Date of filing of Application :22/10/2013
(21) Application No.9121/DELNP/2013 A
(43) Publication Date : 19/12/2014

(54) Title of the invention : SHARING CONTENT AMONG MULTIPLE DEVICES

(51) International classification :G06F15/16
(31) Priority Document No :61/466849
(32) Priority Date :23/03/2011
(33) Name of priority country :U.S.A.
(86) International Application No :PCT/US2012/030115
Filing Date :22/03/2012
(87) International Publication No :WO 2012/129400
(61) Patent of Addition to Application Number :NA
Filing Date :NA
(62) Divisional to Application Number :NA
Filing Date :NA

(71)**Name of Applicant :**
1)LINKEDIN CORPORATION
Address of Applicant :2029 Stierlin Court Mountain View California 94043 U.S.A.
(72)**Name of Inventor :**
1)MALLET Vincent
2)CHENG Jessica
3)FIEDEL Noah
4)GILLUM Eric William
5)RAMANARAYANAN Ganesh
6)WOODS Nicholas James

(57) Abstract :
Systems and methods for the distribution of content among user devices of a device group are presented. In one example logical relationship information describing logical relationships between user devices is accessed. Membership in a device group of a plurality of the user devices is determined based on the logical relationship information. Content from at least one of the user devices of the device group is received over a communication network. The received content is forwarded over the communication network to the other user devices of the device group.

No. of Pages : 64 No. of Claims : 33

(12) PATENT APPLICATION PUBLICATION
(19) INDIA
(22) Date of filing of Application :22/10/2013

(21) Application No.9096/DELNP/2013 A
(43) Publication Date : 19/12/2014

(54) Title of the invention : COMPOSITIONS COMPRISING A GLUCOSE ANTI METABOLITE BHA AND/OR BHT

(51) International classification :A23K1/18,A23K1/16
(31) Priority Document No :13/098756
(32) Priority Date :02/05/2011
(33) Name of priority country :U.S.A.
(86) International Application No :PCT/US2012/035921
Filing Date :01/05/2012
(87) International Publication No :WO 2012/151168
(61) Patent of Addition to Application Number :NA
Filing Date :NA
(62) Divisional to Application Number :NA
Filing Date :NA

(71)**Name of Applicant :**
1)THE IAMS COMPANY
Address of Applicant :One Procter & Gamble Plaza Cincinnati Ohio 45202 U.S.A.
(72)**Name of Inventor :**
1)LUHADIYA Ashok Premchand
2)DAVENPORT Gary Michael
3)ZHANG Jin
4)ROTH George S.
5)INGRAM Donald Keith

(57) Abstract :
A composition including a glucose anti metabolite BHA and/or BHT. The composition can be for a companion animal. The composition can be a nutritionally balanced pet food composition.

No. of Pages : 28 No. of Claims : 15

(12) PATENT APPLICATION PUBLICATION
(19) INDIA
(22) Date of filing of Application :22/10/2013
(21) Application No.9098/DELNP/2013 A
(43) Publication Date : 19/12/2014

(54) Title of the invention : WINDSCREEN WIPER DEVICE

(51) International classification :B60S1/38
(31) Priority Document No :NA
(32) Priority Date :NA
(33) Name of priority country :NA
(86) International Application No :PCT/EP2011/055787
Filing Date :13/04/2011
(87) International Publication No :WO 2012/139635
(61) Patent of Addition to Application Number :NA
Filing Date :NA
(62) Divisional to Application Number :NA
Filing Date :NA

(71)**Name of Applicant :**
1)FEDERAL MOGUL S.A.
Address of Applicant :Avenue Champion B 6790 Aubange Belgium
(72)**Name of Inventor :**
1)BOUDJENAH Daniel
2)ROUSSEL Gerald

(57) Abstract :
A windscreen wiper device (1) of the flat blade type comprising an elongated wiper blade (2) of a flexible material including at least one longitudinal groove in which at least one longitudinal strip (4) is disposed and comprising a connecting device (5) for an oscillating arm being connected to the flexible material of said wiper blade by at least one pin (14) wherein said pin cooperates with a recess (21) provided along an exterior edge of said longitudinal strip in order to block any movement of said wiper blade in longitudinal direction thereof relative to said longitudinal strip at the location of the interconnection of said connecting device and said wiper blade wherein said pin allows a movement of said longitudinal strip in upward and downward direction at least substantially perpendicular to the windscreen to be wiped.

No. of Pages : 35 No. of Claims : 18

(12) PATENT APPLICATION PUBLICATION
(19) INDIA
(22) Date of filing of Application :22/10/2013
(21) Application No.9099/DELNP/2013 A
(43) Publication Date : 19/12/2014

(54) Title of the invention : VEHICLE SEAT IN PARTICULAR MOTOR VEHICLE SEAT

(51) International classification :B60N2/22,B60N2/30
(31) Priority Document No :10 2011 101 879.8
(32) Priority Date :12/05/2011
(33) Name of priority country :Germany
(86) International Application No :PCT/EP2012/057078
Filing Date :18/04/2012
(87) International Publication No :WO 2012/152553
(61) Patent of Addition to Application Number :NA
Filing Date :NA
(62) Divisional to Application Number :NA
Filing Date :NA

(71)**Name of Applicant :**
1)KEIPER GMBH & CO. KG
Address of Applicant :Hertelsbrunnenring 2 67657 Kaiserslautern Germany
(72)**Name of Inventor :**
1)B–HM Andre
2)RECKTENWALD Ralph

(57) Abstract :
The invention relates to a vehicle seat, in particular to a motor vehicle seat, having a base structure (3) that is to be connected to the vehicle structure (S) and a backrest (10) that can be moved relative to the base structure (3) by means of kinematics, such as to transfer the vehicle seat (1) from at least one usage position allowing a person to sit down to a non-usage position or to another usage position, wherein a multi-bar linkage, in particular a four-bar linkage (V) , exists at least temporarily, which linkage controls the kinematics. A leaf spring (30) is provided in said vehicle seat, said leaf spring forming a gear element of the multibar linkage in the relaxed extended state thereof.

No. of Pages : 25 No. of Claims : 9

(12) PATENT APPLICATION PUBLICATION
(19) INDIA
(22) Date of filing of Application :22/10/2013

(21) Application No.9123/DELNP/2013 A
(43) Publication Date : 19/12/2014

(54) Title of the invention : FASTENING ARRANGEMENT

(51) International classification :E04D13/12,E04G21/32,F16B13/08
(31) Priority Document No :1104974.9
(32) Priority Date :24/03/2011
(33) Name of priority country :U.K.
(86) International Application No :PCT/EP2012/054275
Filing Date :12/03/2012
(87) International Publication No :WO 2012/126762
(61) Patent of Addition to Application Number :NA
Filing Date :NA
(62) Divisional to Application Number :NA
Filing Date :NA

(71)**Name of Applicant :**
1)CAPITAL SAFETY GROUP (NORTHERN EUROPE) LIMITED
Address of Applicant :5 Merse Road Moons Moat North Industrial Estate Redditch Worcestershire B98 9HL U.K.
(72)**Name of Inventor :**
1)LUKE Simon

(57) Abstract :
A fastening arrangement in cludes a threaded fastener (5) including a head (11), a shank (9) and a laterally expandable member (17). A bridging member (7) is provided on the shank of the fastener, the bridging member having an aperture through which the shank passes. The aperture has a dimension greater than the dimension of the shank (9) but less than the dimension of the head (11), and an outer dimension greater than a dimension of the laterally expandable member (17) in a first configuration but less than the dimension of the laterally expandable member in a second configuration.

No. of Pages : 11 No. of Claims : 12

(12) PATENT APPLICATION PUBLICATION
(19) INDIA
(22) Date of filing of Application :23/10/2013
(21) Application No.9124/DELNP/2013 A
(43) Publication Date : 19/12/2014

(54) Title of the invention : CURING PROCESS FOR CONCRETE

(51) International classification :C04B41/63,C04B40/04
(31) Priority Document No :1153983
(32) Priority Date :10/05/2011
(33) Name of priority country :France
(86) International Application No :PCT/EP2012/058686
Filing Date :10/05/2012
(87) International Publication No :WO 2012/152887
(61) Patent of Addition to Application Number :NA
Filing Date :NA
(62) Divisional to Application Number :NA
Filing Date :NA

(71)**Name of Applicant :**
1)LAFARGE
Address of Applicant :61 rue des Belles Feuilles F 75116 Paris France
(72)**Name of Inventor :**
1)CHRISTIDIS Chris
2)PEREZ Fabien
3)WATT Olivier

(57) Abstract :
The present invention relates to a curing process of a concrete element comprising at least partially coating the element with a curing composition, said composition comprising a solvent and a thickening agent said thickening agent being insoluble at a pH greater than (12) and being soluble in the solvent for a solubility range of pH, the upper limit of the solubility range being less than (11).

No. of Pages : 25 No. of Claims : 11

(12) PATENT APPLICATION PUBLICATION
(19) INDIA
(22) Date of filing of Application :23/10/2013
(21) Application No.9125/DELNP/2013 A
(43) Publication Date : 19/12/2014

(54) Title of the invention : HYDROMETHANATION OF A CARBONACEOUS FEEDSTOCK WITH CHAR BENEFICIATION

(51) International classification :C10L3/08,C10L3/10,C10J3/46
(31) Priority Document No :61/478108
(32) Priority Date :22/04/2011
(33) Name of priority country :U.S.A.
(86) International Application No :PCT/US2012/034229
Filing Date :19/04/2012
(87) International Publication No :WO 2012/145497
(61) Patent of Addition to Application Number :NA
Filing Date :NA
(62) Divisional to Application Number :NA
Filing Date :NA

(71)**Name of Applicant :**
1)GREATPOINT ENERGY INC.
Address of Applicant :222 Third Street Suite 2163 Cambridge MA 02142 U.S.A.
(72)**Name of Inventor :**
1)ROBINSON Earl T.
2)RAPPAS Alkis S.

(57) Abstract :
The present invention relates to processes for hydromethanating a carbonaceous feedstock to a methane enriched synthesis gas and a char by product with catalyst recovery from the by product char to generate a spent char and with treatment of the spent char to generate a carbon rich portion which is ultimately recycled to the hydromethanation reactor to increase overall carbon utilization and increase yields of product gas (per unit of feedstock).

No. of Pages : 54 No. of Claims : 9

(12) PATENT APPLICATION PUBLICATION
(19) INDIA
(22) Date of filing of Application :22/10/2013
(21) Application No.9087/DELNP/2013 A
(43) Publication Date : 19/12/2014

(54) Title of the invention : SURFACE TREATED METAL MATERIAL AND AQUEOUS METAL SURFACE TREATMENT AGENT

(51) International classification :C23C22/36,B05D7/14,B32B9/00
(31) Priority Document No :2011100126
(32) Priority Date :27/04/2011
(33) Name of priority country :Japan
(86) International Application No :PCT/JP2012/061233
Filing Date :26/04/2012
(87) International Publication No :WO 2012/147860
(61) Patent of Addition to Application Number :NA
Filing Date :NA
(62) Divisional to Application Number :NA
Filing Date :NA

(71)**Name of Applicant :**
1)NIPPON STEEL & SUMITOMO METAL CORPORATION
Address of Applicant :6 1 Marunouchi 2 chome Chiyoda ku Tokyo 1008071 Japan
2)NIHON PARKERIZING Co. LTD.
(72)**Name of Inventor :**
1)MORISHITA Atsushi
2)KANETO Taihei
3)KIMATA Yoshio
4)TAKAHASHI Akira
5)KIKUCHI Ikuo
6)YAMAGUCHI Hidehiro
7)NOMURA Shinji

(57) Abstract :
A surface-treated metal material of the present invention has a composite film on the surface of a metal material. The composite film includes an organic silicon compound (W) having cyclic siloxane bonds, at least one metal compound (X) selected from a group consisting of a titanium compound and a zirconium compound, a phosphate compound (Y) and a fluorine compound (Z). In each of the components of the composite film, the ratio of XsAVs is from 0.06 to 0.16, where Ws is a solid mass of Si derived from the organic silicon compound (W) and Xs is a solid mass of at least one metal component selected from a group consisting of Ti and Zr included in the metal compound (X); the ratio of YsAVs is from 0.15 to 0.31, where Ws is the solid mass of Si and Ys is a solid mass of P derived from the phosphate compound (Y); and the ratio of Zs/ Ws is from 0.08 to 0.50, where Ws is the solid mass of Si and Zs is a solid mass of F derived from the fluorine compound (Z).

No. of Pages : 57 No. of Claims : 12

(12) PATENT APPLICATION PUBLICATION
(19) INDIA
(22) Date of filing of Application :22/10/2013
(21) Application No.9088/DELNP/2013 A
(43) Publication Date : 19/12/2014

(54) Title of the invention : GENETIC VARIANT OF CYTOMEGALOVIRUS (CMV)

(51) International classification :C07K14/045,G01N33/68
(31) Priority Document No :61/475926
(32) Priority Date :15/04/2011
(33) Name of priority country :U.S.A.
(86) International Application No :PCT/SE2012/050407
Filing Date :13/04/2012
(87) International Publication No :WO 2012/141653
(61) Patent of Addition to Application Number :NA
Filing Date :NA
(62) Divisional to Application Number :NA
Filing Date :NA

(71)**Name of Applicant :**
1)NAUCL‰R Cecilia
Address of Applicant :Tvrhandsgrnd 3 S 167 66 Bromma Sweden
(72)**Name of Inventor :**
1)NAUCL‰R Cecilia

(57) Abstract :
The present invention relates to a genetic variant of CMV, said genetic variant lacking intron 2 of the IE region of CMV (CMV IEΔ i2). The present invention also related to various uses of this genetic variant as well as RNA splice variants tran - scribed therefrom, and proteins expressed from the RNA splice variants, such as in the diagnosis of a CMV related cancer disease, and identification of individuals at risk of developing cancer or risk of transferring the CMV IEΔ i2 virus with a human sample and prevention and treatment through targeting of unique CMV IE proteins for immunotherapy and vaccination.

No. of Pages : 64 No. of Claims : 32

(12) PATENT APPLICATION PUBLICATION
(19) INDIA
(22) Date of filing of Application :22/10/2013
(21) Application No.9089/DELNP/2013 A
(43) Publication Date : 19/12/2014

(54) Title of the invention : SUBSTITUTED BICYCLIC METHYL AMINE DERIVATIVES AS SPHINGOSINE- 1 PHOSPHATE RECEPTORS MODULATORS

(51) International classification :C07D215/12,A61K31/131,A61K31/47
(31) Priority Document No:61/476367
(32) Priority Date :18/04/2011
(33) Name of priority country :U.S.A.
(86) International Application No :PCT/US2012/033459
Filing Date :13/04/2012
(87) International Publication No :WO 2012/145236
(61) Patent of Addition to Application Number :NA
Filing Date :NA
(62) Divisional to Application Number :NA
Filing Date :NA

(71)**Name of Applicant :**
1)ALLERGAN INC.
Address of Applicant :2525 Dupont Drive Irvine California 92612 U.S.A.
(72)**Name of Inventor :**
1)TAKEUCHI Janet A.
2)LI Ling
3)IM Wha Bin

(57) Abstract :
The present invention relates to novel substituted bicyclic methyl amine derivatives of formula (I), wherein A, Li, L2, R1 to R7 and a to c are as defined in claim 1, compositions thereof and their use in the treatment of diseases related to the modulation of (24, 48 hours) sphingosine- 1 -phosphate receptors.

No. of Pages : 53 No. of Claims : 13

(12) PATENT APPLICATION PUBLICATION
(19) INDIA
(22) Date of filing of Application :22/10/2013
(21) Application No.9090/DELNP/2013 A
(43) Publication Date : 19/12/2014

(54) Title of the invention : TERPENE ALCOHOLS FOR USE IN FRAGRANCE COMPOSITIONS AND PERFUMED PRODUCTS

(51) International classification :C07C33/02,C07C33/05,A61Q13/00
(31) Priority Document No :PCT/CN2011/000894
(32) Priority Date :25/05/2011
(33) Name of priority country :China
(86) International Application No :PCT/EP2012/059815
Filing Date :25/05/2012
(87) International Publication No :WO 2012/160189
(61) Patent of Addition to Application Number :NA
Filing Date :NA
(62) Divisional to Application Number :NA
Filing Date :NA

(71)**Name of Applicant :**
1)GIVAUDAN SA
Address of Applicant :Chemin de la Parfumerie 5 CH 1214 Vernier Switzerland
(72)**Name of Inventor :**
1)DANG Hai Shan
2)GOEKE Andreas
3)ZOU Yue

(57) Abstract :
Compounds of formula (1) wherein R is hydrogen and the bond between C-2 and C-3 together with the dotted line represents a double bond, or R is - CH2 - and together with C-2 and C-3 represents a cyclopropane ring and the bond between C-2 and C-3 together with the dotted line represents a single bond, having floral rosy odor notes, their use as fragrance and perfumed products comprising them.

No. of Pages : 16 No. of Claims : 9

(12) PATENT APPLICATION PUBLICATION
(19) INDIA
(22) Date of filing of Application :22/10/2013
(21) Application No.9091/DELNP/2013 A
(43) Publication Date : 19/12/2014

(54) Title of the invention : RECIPROCATING PUMP WITH INTERSECTING BORE GEOMETRY

(51) International classification :F04B39/00
(31) Priority Document No :61/477471
(32) Priority Date :20/04/2011
(33) Name of priority country :U.S.A.
(86) International Application No :PCT/US2012/034397
Filing Date :20/04/2012
(87) International Publication No :WO 2012/145591
(61) Patent of Addition to Application Number :NA
Filing Date :NA
(62) Divisional to Application Number :NA
Filing Date :NA

(71)**Name of Applicant :**
1)S.P.M. FLOW CONTROL INC.
Address of Applicant :7601 Wyatt Dr. Fort Worth TX 76108 U.S.A.
(72)**Name of Inventor :**
1)FREED Wesley D.
2)DILLE Mark C.
3)SKURDALSVOLD Scott

(57) Abstract :
A reciprocating pump housing having a suction valve bore a discharge valve bore a plunger bore and an access bore. The suction and discharge bores are disposed on a first centerline and the plunger and access bores are disposed along a second centerline perpendicular to the first centerline. The pump housing includes a first annular transition zone extending between an intersection of the plunger bore and suction bore and an intersection of the access bore and the discharge valve bore. The housing also includes a second annular transition zone extending between an intersection of the suction valve bore and access bore and an intersection of the plunger bore and discharge valve bore.

No. of Pages : 35 No. of Claims : 52

(12) PATENT APPLICATION PUBLICATION
(19) INDIA
(22) Date of filing of Application :22/10/2013
(21) Application No.9100/DELNP/2013 A
(43) Publication Date : 19/12/2014

(54) Title of the invention : LONGITUDINALLY ADJUSTABLE VEHICLE SEAT WITH A MEMORY DEVICE

(51) International classification :B60N2/08,B60N2/12
(31) Priority Document No :10 2011 100 866.0
(32) Priority Date :07/05/2011
(33) Name of priority country :Germany
(86) International Application No :PCT/EP2012/058062
Filing Date :03/05/2012
(87) International Publication No :WO 2012/152634
(61) Patent of Addition to Application Number :NA
Filing Date :NA
(62) Divisional to Application Number :NA
Filing Date :NA

(71)**Name of Applicant :**
1)KEIPER GMBH & CO. KG
Address of Applicant :Hertelsbrunnenring 2 67657 Kaiserslautern Germany
(72)**Name of Inventor :**
1)UTZINGER Karl

(57) Abstract :
In a longitudinally adjustable vehicle seat with a freely pivotable backrest which can be folded forward and with a memory device (18), the memory device (18) has a stop rail (14) with latching openings (14a), and a locking element (16) with a slider (16a) and pall (16b) connected pivotably thereto and a ramp (16e) which is arranged on the slider (16a) and has an upper region (16f), with which a scanner (19) of the memory device (18) interacts, wherein the scanner (19) is connected to a transmission arrangement (26) for locking the backrest in an entry position, and the pall (16b) is prestressed in the locking direction by means of a spring.

No. of Pages : 48 No. of Claims : 9

(12) PATENT APPLICATION PUBLICATION
(19) INDIA
(22) Date of filing of Application :22/10/2013
(21) Application No.9101/DELNP/2013 A
(43) Publication Date : 19/12/2014

(54) Title of the invention : WATER PURIFICATION UNIT

(51) International classification :B01D27/08,C02F1/32
(31) Priority Document No :61/473778
(32) Priority Date :10/04/2011
(33) Name of priority country :U.S.A.
(86) International Application No :PCT/US2012/032880
Filing Date :10/04/2012
(87) International Publication No :WO 2012/142025
(61) Patent of Addition to Application Number :NA
Filing Date :NA
(62) Divisional to Application Number :NA
Filing Date :NA

(71)**Name of Applicant :**
1)NANOHOLDINGS LLC
Address of Applicant :112 Rowayton Avenue Rowayton CT 06853 U.S.A.
(72)**Name of Inventor :**
1)PRADHAN Bhabendra
2)VEDAM Hiranmayee
3)PRADEEP Thalappil
4)ANSHUP
5)AMRITA Chaudhary
6)MOHAN Udhaya Sankar
7)AIGAL Sahaja

(57) Abstract :
A sachet that can remove contaminates from a water sample. The sachet can comprise a nanomaterial. Any suitable amount of nanomaterial can be present in the sachet, for example, 1 %-30% by volume, preferably 1-10% or 2%-5%. In case of antimicrobial composition packed, a preferable quantity to be used in sachet is 2 to 5%. The nanomaterial in the sachet can release, for example, silver, into the water. The described sachet can be immersed in microbial contaminated water and then lifted out of water, such that water in the sachet can drain through the antimicrobial composition packed in the sachet. The composition can release trace quantity of silver ions in the water to be treated. The process of immersion-lift-drain can be repeated, to ensure that entire water volume has contacted the composition. The purification composition can comprise from about 50 vol% to about 99 vol% of the sachet.

No. of Pages : 40 No. of Claims : 12

(12) PATENT APPLICATION PUBLICATION
(19) INDIA
(22) Date of filing of Application :23/10/2013
(21) Application No.9139/DELNP/2013 A
(43) Publication Date : 19/12/2014

(54) Title of the invention : HYDROGEN FUEL CELL AND SYSTEM THEREOF AND METHOD FOR DYNAMIC VARIABLE HUMIDITY CONTROL

(51) International classification :H01M8/00,H01M8/04
(31) Priority Document No :201110100207.2
(32) Priority Date :21/04/2011
(33) Name of priority country :China
(86) International Application No :PCT/CN2012/072086
Filing Date :08/03/2012
(87) International Publication No :WO 2012/142881
(61) Patent of Addition to Application Number :NA
Filing Date :NA
(62) Divisional to Application Number :NA
Filing Date :NA

(71)**Name of Applicant :**
1)LI Tieliu
Address of Applicant :Room 101 Unit 3 Building 5 Beiwei Jiayuan No.96 Beiyuan Road Chaoyang District Beijing 100012 China
(72)**Name of Inventor :**
1)LI Tieliu

(57) Abstract :
Disclosed are a hydrogen fuel cell and system thereof, and a method for dynamic variable humidity control; the hydrogen fuel cell comprising a stack assembly and an outside plate gas distribution device; the stack assembly is encapsulated with a hard housing; the outside plate gas distribution device is fixed on the hard housing; the outside plate gas distribution device comprising a working gas flow outside plate gas distribution device and a heat dissipation gas distribution device; the working gas flow outside plate gas distribution device i s provided with a fan mount for connecting with a working fan, and the working gas flow outside plate gas distribution device extends into the inner cavity of the housing from outside of the housing; the heat dissipation gas distribution device comprising a heat dissipation channel disposed outside of the housing and connected to the housing inner cavity, and a heat dissipation vent disposed on the housing; and the heat dissipation channel is provided with a heat dissipation fan mount for connecting with a heat dissipation fan. The hydrogen fuel cell of the present invention improves power generation efficiency, reduces costs and increases service life.

No. of Pages : 50 No. of Claims : 28

(12) PATENT APPLICATION PUBLICATION
(19) INDIA
(22) Date of filing of Application :23/10/2013
(21) Application No.9140/DELNP/2013 A
(43) Publication Date : 19/12/2014

(54) Title of the invention : WIND TURBINE INCLUDING OPTICAL SENSOR SYSTEM

(51) International classification :G01H9/00
(31) Priority Document No :PA 2011 70174
(32) Priority Date :13/04/2011
(33) Name of priority country :Denmark
(86) International Application No :PCT/DK2012/050128
Filing Date :13/04/2012
(87) International Publication No :WO 2012/139592
(61) Patent of Addition to Application Number :NA
Filing Date :NA
(62) Divisional to Application Number :NA
Filing Date :NA

(71)**Name of Applicant :**
1)VESTAS WIND SYSTEMS A/S
Address of Applicant :Hedeager 44 DK 8200 Aarhus N Denmark
(72)**Name of Inventor :**
1)OLESEN Ib Svend

(57) Abstract :
A wind turbine (1) includes an optical sensor system (10) comprising one or more optical sensors (12) comprising: a sensor membrane (18); a light source (20) for illuminating a surface of the sensor membrane; an optical dispersive element (26) arranged to disperse the light from the light source (20); and a light detector (30) for receiving a portion of the dispersed light beam after reflection from the surface of the sensor membrane (18)and dispersion of the light beam by the optical dispersive element. The wavelength of the light received at the light detector (30) varies as a function of the displacement of the sensor membrane (18) and the light detector operatively provides an output based on changes in the wavelength of the received light. The wind turbine is operable based on an input to a wind turbine control system received from the optical sensor system.

No. of Pages : 31 No. of Claims : 23

(12) PATENT APPLICATION PUBLICATION
(19) INDIA
(22) Date of filing of Application :19/09/2013
(21) Application No.8190/DELNP/2013 A
(43) Publication Date : 19/12/2014

(54) Title of the invention : BATTERY PACK

(51) International classification :H01M2/10,H01M2/12
(31) Priority Document No :2011078343
(32) Priority Date :31/03/2011
(33) Name of priority country :Japan
(86) International Application No :PCT/JP2011/005034
Filing Date :07/09/2011
(87) International Publication No :WO 2012/131804
(61) Patent of Addition to Application Number :NA
Filing Date :NA
(62) Divisional to Application Number :NA
Filing Date :NA

(71)**Name of Applicant :**
1)NEC Energy Devices Ltd.
Address of Applicant :1120 Shimokuzawa Chuo ku Sagamihara shi Kanagawa 2525298 Japan
(72)**Name of Inventor :**
1)SUZUKI Toru

(57) Abstract :
In order to provide a battery pack to which a reuse 5 prevention measure is applied in such a way that unit batteries become damaged and useless after the battery pack is disassembled, a battery pack of the present invention is characterized by including a plurality of unit batteries 100 stacked and bonded together with a two-sided adhesive tape 460, the unit batteries 10 100 including a laminate film casing material on which a fusion-bonding portion is formed to seal an electrode laminated body that includes a sheet positive electrode, a sheet negative electrode, and a separator, and an electrolytic solution, wherein a bonding strength of the two-sided adhesive tape 460 bonding the 15 unit batteries 100 together is larger than a minimum bonding strength of the fusion-bonding portion.

No. of Pages : 77 No. of Claims : 1

(12) PATENT APPLICATION PUBLICATION
(19) INDIA
(22) Date of filing of Application :19/09/2013
(21) Application No.8191/DELNP/2013 A
(43) Publication Date : 19/12/2014

(54) Title of the invention : CHARGE SERVICE SYSTEM SERVER AND CHARGE SERVICE METHOD

(51) International classification :G07B15/00,B60L11/18,G06Q50/10
(31) Priority Document No :2011050262
(32) Priority Date :08/03/2011
(33) Name of priority country :Japan
(86) International Application No :PCT/JP2012/055820
Filing Date :07/03/2012
(87) International Publication No :WO 2012/121290
(61) Patent of Addition to Application Number :NA
Filing Date :NA
(62) Divisional to Application Number :NA
Filing Date :NA

(71)**Name of Applicant :**
1)NEC Corporation
Address of Applicant :7 1 Shiba 5 chome Minato ku Tokyo 1088001 Japan
(72)**Name of Inventor :**
1)CHIHARA Shinpei

(57) Abstract :
A charger 20 includes a charging unit 22 that charges a secondary battery of an EV 50, and a charger condition acquisition unit 23 that detects completion of a charging operation performed on the secondary battery and detects an operation 5 relating to departure of the EV 50 from a charging space following the charging operation. A server apparatus 40 includes a charger condition monitoring unit 45 that monitors a condition of the charger 20 upon reception of a notification from the charger 20 indicating that completion of the charging operation and the operation relating to departure of the EV 50 from the charging space have been detected, and a 10 parking fee calculation unit 43 that calculates a parking time of the EV 50 on the basis of a timing at which completion of the charging operation is detected and a timing at which the operation relating to departure of the electric vehicle from the charging space is detected, and calculates a parking fee to be charged to a user on the basis of the parking time.

No. of Pages : 26 No. of Claims : 10

(12) PATENT APPLICATION PUBLICATION
(19) INDIA
(22) Date of filing of Application :19/09/2013
(21) Application No.8192/DELNP/2013 A
(43) Publication Date : 19/12/2014

(54) Title of the invention : BATTERY PACK AND ELECTRIC BICYCLE

(51) International classification :H01M2/10
(31) Priority Document No :2011078306
(32) Priority Date :31/03/2011
(33) Name of priority country :Japan
(86) International Application No :PCT/JP2011/005030
Filing Date :07/09/2011
(87) International Publication No :WO 2012/131800
(61) Patent of Addition to Application Number :NA
Filing Date :NA
(62) Divisional to Application Number :NA
Filing Date :NA

(71)**Name of Applicant :**
1)NEC Energy Devices Ltd.
Address of Applicant :1120 Shimokuzawa Chuo ku Sagamihara shi Kanagawa 2525298 Japan
(72)**Name of Inventor :**
1)SUZUKI Toru

(57) Abstract :
To provide a battery pack that is less likely to be affected by vibrations, shocks and the like and has a 5 stable characteristic, and an electric bicycle that uses the battery pack. A battery pack includes: a battery protective member having a first plate section and a second plate section which is integrally connected to both edge portions of a 10 width direction of the first plate section and extends substantially in a direction perpendicular to both surfaces of the first plate section, wherein the flat batteries are placed on the first plate section; and a protective circuit board. A moistureproof film for the 15 protective circuit board is formed using a plurality of film forming materials different in viscosity, hardness, and thixotropic properties.

No. of Pages : 69 No. of Claims : 8

(12) PATENT APPLICATION PUBLICATION
(19) INDIA
(22) Date of filing of Application :23/10/2013
(21) Application No.9145/DELNP/2013 A
(43) Publication Date : 19/12/2014

(54) Title of the invention : FIBERS OF POLYMER WAX COMPOSITIONS

(51) International classification :C08K5/101,D01F1/10,D01F6/06
(31) Priority Document No :61/488551
(32) Priority Date :20/05/2011
(33) Name of priority country :U.S.A.
(86) International Application No :PCT/US2012/038526
Filing Date :18/05/2012
(87) International Publication No :WO 2012/162130
(61) Patent of Addition to Application Number :NA
Filing Date :NA
(62) Divisional to Application Number :NA
Filing Date :NA

(71)**Name of Applicant :**
1)THE PROCTER & GAMBLE COMPANY
Address of Applicant :One Procter & Gamble Plaza Cincinnati Ohio 45202 U.S.A.
(72)**Name of Inventor :**
1)ALLEN William Maxwell
2)BOND Eric Bryan
3)NODA Isao

(57) Abstract :
Fibers formed from compositions comprising thermoplastic polymers and waxes are disclosed where the wax is dispersed throughout the thermoplastic polymer. Also disclosed are nonwoven webs and articles formed from fibers of these compositions.

No. of Pages : 53 No. of Claims : 9

(12) PATENT APPLICATION PUBLICATION
(19) INDIA
(22) Date of filing of Application :23/10/2013
(21) Application No.9146/DELNP/2013 A
(43) Publication Date : 19/12/2014

(54) Title of the invention : PROCESS FOR CONVERTING A SOLID BIOMASS MATERIAL

(51) International classification :C10G3/00,C10G11/18,B01J8/18
(31) Priority Document No :11163411.9
(32) Priority Date :21/04/2011
(33) Name of priority country :EPO
(86) International Application No :PCT/EP2012/057415
Filing Date :23/04/2012
(87) International Publication No:WO 2012/143573
(61) Patent of Addition to Application Number :NA
Filing Date :NA
(62) Divisional to Application Number :NA
Filing Date :NA

(71)**Name of Applicant :**
1)SHELL INTERNATIONALE RESEARCH MAATSCHAPPIJ B.V.
Address of Applicant :Carel van Bylandtlaan 30 NL 2596 HR The Hague Netherlands
(72)**Name of Inventor :**
1)SCHAVERIEN Colin John
2)BOON Andries Quirin Maria
3)JANSSEN Andries Hendrik
4)HARRIS John William
5)VAN PAASEN Sander
6)GOSSELINK Johan Willem
7)WAY Nicolaas Wilhelmus Joseph

(57) Abstract :
A process for converting a solid biomass material, comprising contacting the solid biomass material with a catalytic cracking catalyst at a temperature of more than 400°C in a riser reactor to produce one or more cracked products, wherein the riser reactor comprises: - a riser reactor pipe, which riser reactor pipe has a diameter that increases in a downstream direction; and - a bottom section, which bottom section has a larger diameter than the riser reactor pipe; and wherein the solid biomass material is supplied to the riser reactor in the bottom section.

No. of Pages : 46 No. of Claims : 14

(12) PATENT APPLICATION PUBLICATION
(19) INDIA
(22) Date of filing of Application :21/10/2013
(21) Application No.9066/DELNP/2013 A
(43) Publication Date : 19/12/2014

(54) Title of the invention : IN LINE DECAY TIME SCANNER

(51) International classification :G07D7/12,G01N21/64
(31) Priority Document No :61/493710
(32) Priority Date :06/06/2011
(33) Name of priority country :U.S.A.
(86) International Application No :PCT/EP2012/002339
Filing Date :01/06/2012
(87) International Publication No :WO 2012/167894
(61) Patent of Addition to Application Number :NA
Filing Date :NA
(62) Divisional to Application Number :NA
Filing Date :NA

(71)**Name of Applicant :**
1)SICPA HOLDING SA
Address of Applicant :Av. de Florissant 41 CH 1008 Prilly Switzerland
(72)**Name of Inventor :**
1)VASIC Milan
2)DUCA Nicola

(57) Abstract :
The disclosed scanner allows detecting decay time characteristics of light emitted by a luminescent marking on an item which is transported, even at high speed, on a distribution/production line. The detection zone of the scanner s light sensor has a shape elongated along a path of the moving item, and the responsivity of the light sensor, within the wavelength range of the emit ted luminescence light, is uniform over the detection zone. The control unit of the scanner is further operable to adapt the drive cur rent, or drive voltage, powering its excitation light source to accordingly adapt the intensity of the excitation light delivered to the marking so that its light sensor can reliably measure the corresponding luminescence light response, and thus accurately determine a corresponding decay time value.

No. of Pages : 53 No. of Claims : 25

(12) PATENT APPLICATION PUBLICATION
(19) INDIA
(22) Date of filing of Application :21/10/2013
(21) Application No.9067/DELNP/2013 A
(43) Publication Date : 19/12/2014

(54) Title of the invention : HEAT EXCHANGER FOR COOLING EXHAUST GAS

(51) International classification :F02M25/07
(31) Priority Document No :11382141.7
(32) Priority Date :11/05/2011
(33) Name of priority country :EPO
(86) International Application No :PCT/EP2012/058592
Filing Date :10/05/2012
(87) International Publication No :WO 2012/152852
(61) Patent of Addition to Application Number :NA
Filing Date :NA
(62) Divisional to Application Number :NA
Filing Date :NA

(71)**Name of Applicant :**
1)BORGWARNER EMISSIONS SYSTEMS SPAIN S.L.
Address of Applicant :Carretera de Zamanes 20 Vigo Pontevedra E 36315 Spain
(72)**Name of Inventor :**
1)GRANDE FERN NDEZ Jos Antonio
2)CHAMADOIRA GMEZ ngel

(57) Abstract :
The present invention relates to a heat exchanger for cooling a gas which can mainly be applied in EGR systems with a floating core. The differences in temperature achieved during operation of the casing and the core of gas ducts housed therein give rise to degrees of expansion which are also different. If the ends of both components were fixed to each other, stresses which would cause the breakage thereof would occur. The common solution applied is to leave one of the ends of the core of ducts floating, i.e., with capacity for longitudinal displacement with respect to the casing to prevent the occurrence of stresses. The floating end of the core has an attachment by means of O-ring gaskets. The O-ring gaskets are made of an elastomer that cannot reach very high temperatures, hence in the state of the art the floating attachment is on the side where the already cooled gas exits. The invention is characterized by a special manner of attaching the end where the core is floating and the casing so as to allow the end where the hot gas enters to be the end where the attachment is a floating attachment.

No. of Pages : 21 No. of Claims : 9

(12) PATENT APPLICATION PUBLICATION
(19) INDIA
(22) Date of filing of Application :21/10/2013
(21) Application No.9068/DELNP/2013 A
(43) Publication Date : 19/12/2014

(54) Title of the invention : FAST ARTICULATED MOTION TRACKING

(51) International classification :G06T7/20
(31) Priority Document No :61/486380
(32) Priority Date :16/05/2011
(33) Name of priority country :U.S.A.
(86) International Application No :PCT/EP2012/055650
Filing Date :29/03/2012
(87) International Publication No :WO 2012/156141
(61) Patent of Addition to Application Number :NA
Filing Date :NA
(62) Divisional to Application Number :NA
Filing Date :NA

(71)**Name of Applicant :**
1)MAX PLANCK GESELLSCHAFT ZUR F–RDERUNG DER WISSENSCHAFTEN E.V.
Address of Applicant :Hofgartenstrasse 8 80539 Munich Germany
2)ETH EIDGEN–SSISCHE TECHNISCHE HOCHSCHULE ZRICH
(72)**Name of Inventor :**
1)HASLER Nils
2)STOLL Carsten
3)THEOBALT Christian
4)GALL Juergen
5)SEIDEL Hans Peter

(57) Abstract :
According to the invention a computer implemented method for tracking an object in a sequence of multi view input video images comprises the steps: acquiring a model of the object; tracking the object in the multi view input video image sequence using the model.

No. of Pages : 26 No. of Claims : 20

(12) PATENT APPLICATION PUBLICATION
(19) INDIA
(22) Date of filing of Application :21/10/2013
(21) Application No.9069/DELNP/2013 A
(43) Publication Date : 19/12/2014

(54) Title of the invention : METHOD OF CONTROLLING DRUM TEMPERATURE TRANSIENTS

(51) International classification :F22B37/00
(31) Priority Document No :13/073230
(32) Priority Date :28/03/2011
(33) Name of priority country :U.S.A.
(86) International Application No :PCT/US2012/030035
Filing Date :22/03/2012
(87) International Publication No :WO 2012/134926
(61) Patent of Addition to Application Number :NA
Filing Date :NA
(62) Divisional to Application Number :NA
Filing Date :NA

(71)**Name of Applicant :**
1)ALSTOM TECHNOLOGY LTD
Address of Applicant :Brown Boveri Strasse 7 CH 5400 Baden Switzerland
(72)**Name of Inventor :**
1)PERRIN, Ian James
2)BAIRLEY, Donald William
3)TERDALKAR, Rahul J.
4)BAUVER II, Wesley Paul

(57) Abstract :
An evaporator system (200) comprises an evaporator (202); a drum (204); and a pump (206) that are in fluid communication with each other. The pump (206) is operative to create a temporary pressure gradient during start up of an evaporator system (200) and transport a fluid from the evaporator to the drum prior to the fluid reaching its boiling point in the evaporator (202). Following the fluid reaching its boiling point in the evaporator (202) the fluid naturally circulates in the evaporator system.

No. of Pages : 12 No. of Claims : 8

(12) PATENT APPLICATION PUBLICATION
(19) INDIA
(22) Date of filing of Application :23/10/2013
(21) Application No.9150/DELNP/2013 A
(43) Publication Date : 19/12/2014

(54) Title of the invention : USE OF REGULATOR OF CALCINEURIN 1 FOR MANUFACTURING MEDICAMENT FOR TREATMENT OF DISEASES ASSOCIATED WITH INCREASED NF-KB ACTIVITY

(51) International classification :A61K38/55,A61P35/00
(31) Priority Document No :NA
(32) Priority Date :NA
(33) Name of priority country :NA
(86) International Application No :PCT/CN2011/073261
Filing Date :25/04/2011
(87) International Publication No :WO 2012/145890
(61) Patent of Addition to Application Number :NA
Filing Date :NA
(62) Divisional to Application Number :NA
Filing Date :NA

(71)**Name of Applicant :**
1)SHANDONG VIGENE BIOSCIENCES INC.
Address of Applicant :Rm 717 Rd 2350 Kaituo High tech Zone Jinan Shandong 250101 China
(72)**Name of Inventor :**
1)LI Wenbo

(57) Abstract :
The present invention provides the use of a peptide comprising an amino acid sequence of SEQ ID NO: 3 or the encoding nucleic acid thereof for manufacturing medicament for treatment of diseases associated with increased NF-kB activity. The peptide can interact with 1KB and influence the phosphorylation of 1KB in the tyrosine at position 42, thereby inhibiting the signal pathway of NF-KB.

No. of Pages : 38 No. of Claims : 10

(12) PATENT APPLICATION PUBLICATION
(19) INDIA
(22) Date of filing of Application :21/10/2013
(21) Application No.9078/DELNP/2013 A
(43) Publication Date : 19/12/2014

(54) Title of the invention : METHOD FOR OBTAINING AND ISOLATING POLYCHLOROPRENE SOLIDS

(51) International classification :C08C1/15,C08F36/18
(31) Priority Document No :11163559.5
(32) Priority Date :21/04/2011
(33) Name of priority country :EPO
(86) International Application No :PCT/EP2012/057191
Filing Date :19/04/2012
(87) International Publication No :WO 2012/143459
(61) Patent of Addition to Application Number :NA
Filing Date :NA
(62) Divisional to Application Number :NA
Filing Date :NA

(71)**Name of Applicant :**
1)LANXESS DEUTSCHLAND GMBH
Address of Applicant :Kennedyplatz 1 50569 Kln Germany
(72)**Name of Inventor :**
1)NEUNER Thomas Oliver
2)STANGE Heiner
3)JOSTEN Rolf
4)FELLER Rolf
5)FIDAN Mesut

(57) Abstract :
The invention relates to methods for isolating and obtaining polychloroprene solids, wherein aqueous polychloroprene dispersion is brought in contact with water vapor containing coagulant, whereby the polychloroprene solid coagulates.

No. of Pages : 13 No. of Claims : 21

(12) PATENT APPLICATION PUBLICATION
(19) INDIA
(22) Date of filing of Application :24/10/2013
(21) Application No.9159/DELNP/2013 A
(43) Publication Date : 19/12/2014

(54) Title of the invention : SYSTEM AND METHOD FOR EVALUATING THE PERFORMANCE OF A PUMP

(51) International classification :F04D15/00,G01N9/00
(31) Priority Document No :13/089546
(32) Priority Date :19/04/2011
(33) Name of priority country :U.S.A.
(86) International Application No :PCT/US2012/033263
Filing Date :12/04/2012
(87) International Publication No :WO 2012/145222
(61) Patent of Addition to Application Number :NA
Filing Date :NA
(62) Divisional to Application Number :NA
Filing Date :NA

(71)**Name of Applicant :**
1)FLOWSERVE MANAGEMENT COMPANY
Address of Applicant :5215 North OConnor Boulevard Suite 2300 Irving TX 75039 U.S.A.
(72)**Name of Inventor :**
1)SPERRY Ronald Kent
2)PRASAD Subramanya G.

(57) Abstract :
Systems and methods to determine the apparent density of a fluid being displaced by a pump. The apparent density may be determined by comparing an expected torque of the pump to an actual torque of the pump. The apparent density can also be used to detect irregular operating conditions.

No. of Pages : 22 No. of Claims : 20

(12) PATENT APPLICATION PUBLICATION
(19) INDIA
(22) Date of filing of Application :24/10/2013
(21) Application No.9160/DELNP/2013 A
(43) Publication Date : 19/12/2014

(54) Title of the invention : ADVANCE SUTURE PASSER

(51) International classification :A61B17/06,A61B17/00,A61B17/29
(31) Priority Document No :13/093248
(32) Priority Date :25/04/2011
(33) Name of priority country:U.S.A.
(86) International Application No :PCT/US2012/034706
Filing Date :23/04/2012
(87) International Publication No :WO 2012/148861
(61) Patent of Addition to Application Number :NA
Filing Date :NA
(62) Divisional to Application Number :NA
Filing Date :NA

(71)**Name of Applicant :**
1)SMITH & NEPHEW INC.
Address of Applicant :1450 Brooks Road Memphis Tennessee 38116 U.S.A.
(72)**Name of Inventor :**
1)FAN We Li
2)NGUYEN Linh Tuong
3)SULLIVAN James Joseph

(57) Abstract :
A suture passer (20) including a tubular member (26) having a proximal end and a distal end and a central axis defined there through in which the tubular member includes at least one lumen (21) formed therein an eyelet (27) configured to receive a suture a movable jaw (23) formed on the distal end of the tubular member configured to move between an open position and a closed position in which the movable jaw includes a plurality of portions and an actuator (28) configured to be received within the at least one lumen of the tubular member in which the actuator is configured to move along the central axis of the tubular member between a first position and a second position in which in the first position the movable jaw is in the closed position and in which in the second position the movable jaw is in the open position.

No. of Pages : 38 No. of Claims : 21

(12) PATENT APPLICATION PUBLICATION
(19) INDIA
(22) Date of filing of Application :24/10/2013
(21) Application No.9161/DELNP/2013 A
(43) Publication Date : 19/12/2014

(54) Title of the invention : INTEGRATED PROCESS FOR THE PRODUCTION OF l-CHLORO-3,3,3-TRIFLUOROPROPENE

(51) International classification	:C07C17/23,C07C17/383,C07C21/18
(31) Priority Document No	:61/487735
(32) Priority Date	:19/05/2011
(33) Name of priority country	:U.S.A.
(86) International Application No	:PCT/US2012/038269
Filing Date	:17/05/2012
(87) International Publication No	:WO 2012/158872
(61) Patent of Addition to Application Number	:NA
Filing Date	:NA
(62) Divisional to Application Number	:NA
Filing Date	:NA

(71)**Name of Applicant :**
1)HONEYWELL INTERNATIONAL INC.
Address of Applicant :Patent Services M/S AB/2B 101 Columbia Road P. O. Box 2245 Morristown NJ 07962 2245 U.S.A.
(72)**Name of Inventor :**
1)COTTRELL Stephen A.
2)TUNG Hsueh Sung
3)POKROVSKI Konstantin A.

(57) Abstract :
The present invention is directed to processes for the production of 1233zd from 240fa and HF, with or without a catalyst, at a commercial scale. The 240fa and HF are fed to a reactor operating at high pressure. The resulting product stream com - prising 1233zd, HCl, HF, and other byproducts is treated to one or more purification techniques including phase separation and one or more distillations to provide purified 1233zd, which meets commercial product specifications, i.e., having a GC purity of 99.5% or greater.

No. of Pages : 11 No. of Claims : 10

(12) PATENT APPLICATION PUBLICATION
(19) INDIA
(22) Date of filing of Application :24/10/2013
(21) Application No.9162/DELNP/2013 A
(43) Publication Date : 19/12/2014

(54) Title of the invention : BATTERY CHARGING SYSTEM

(51) International classification :H02J7/14
(31) Priority Document No :1100442-1
(32) Priority Date :07/06/2011
(33) Name of priority country :Sweden
(86) International Application No :PCT/SE2012/050580
Filing Date :31/05/2012
(87) International Publication No :WO 2012/169953
(61) Patent of Addition to Application Number :NA
Filing Date :NA
(62) Divisional to Application Number :NA
Filing Date :NA

(71)**Name of Applicant :**
1)SCANIA CV AB
Address of Applicant :S 151 87 Sdertlje Sweden
(72)**Name of Inventor :**
1)SKARPED Michael
2)BLOMMEG…RD Per
3)KJELLDAL Therese

(57) Abstract :
The present invention relates to a battery charging system (1) for a vehicle. The system comprises an electric power source (2) adapted to delivering a charging voltage to at least one battery (3) with one or more resistance causing units (R RL) connected to the system. The system (1) further comprises a regulator (4) adapted to continuously receiving a value which represents a charging voltage (Vd) desired at the time and a value which represents a battery voltage (Vbat) at the time for the at least one battery (3) and to using these values as a basis for continuously calculating a charging voltage (Vcalc) delivered from the electric power source (2) and required for achieving said desired charging voltage (Vd) which regulator is adapted to generating a control signal (S) which contains the control command to the electric power source (2) to deliver the calculated charging voltage (Vcalc). The invention relates also to a method in said battery charging system (1) and to a computer programme product.

No. of Pages : 19 No. of Claims : 12

(12) PATENT APPLICATION PUBLICATION
(19) INDIA
(22) Date of filing of Application :22/10/2013
(21) Application No.9103/DELNP/2013 A
(43) Publication Date : 19/12/2014

(54) Title of the invention : SYSTEM AND METHOD OF LOADING AND UNLOADING CONTAINERS

(51) International classification :B60P1/00,B60P1/64,B66F9/06
(31) Priority Document No :2011901079
(32) Priority Date :23/03/2011
(33) Name of priority country :Australia
(86) International Application No :PCT/AU2012/000287
Filing Date :19/03/2012
(87) International Publication No :WO 2012/126050
(61) Patent of Addition to Application Number :NA
Filing Date :NA
(62) Divisional to Application Number :NA
Filing Date :NA

(71)**Name of Applicant :**
1)OKEEFE Robert Trevor
Address of Applicant :455 Stretch Road Mount Helena Western Australia 6082 Australia
(72)**Name of Inventor :**
1)OKEEFE Robert Trevor

(57) Abstract :
A system and method of loading and unloading a shipping container (14) onto and off a tilt tray vehicle (50) is described. The system includes a drawbar assembly (10) adapted to be releasably attached to opposite corner connectors (12) provided on the container (14). A winch (54) is provided for applying traction to the drawbar assembly (10) to draw the container (14) onto the vehicle tray (52) and to facilitate loading of the container onto the tray. An ejector assembly (60) is also provided to releasably engage the drawbar assembly (10) connected to the container (14). When it is desired to unload the container (14) the ejector assembly (60) is moved towards the rear of the tray (52) to move the container partially off the vehicle (50).

No. of Pages : 30 No. of Claims : 18

(12) PATENT APPLICATION PUBLICATION
(19) INDIA
(22) Date of filing of Application :22/10/2013
(21) Application No.9104/DELNP/2013 A
(43) Publication Date : 19/12/2014

(54) Title of the invention : METHOD FOR MANUFACTURING INSERTS FOR ELECTRONIC PASSPORTS

(51) International classification :G06K19/077
(31) Priority Document No :11/01018
(32) Priority Date :05/04/2011
(33) Name of priority country :France
(86) International Application No :PCT/FR2012/000127
Filing Date :04/04/2012
(87) International Publication No :WO 2012/136905
(61) Patent of Addition to Application Number :NA
Filing Date :NA
(62) Divisional to Application Number :NA
Filing Date :NA

(71)**Name of Applicant :**
1)SMART PACKAGING SOLUTIONS (SPS)
Address of Applicant :Avenue Olivier Perroy ZI de Rousset F 13106 Rousset France
(72)**Name of Inventor :**
1)RIPERT Anne
2)VOLPE Pierre
3)CUENOT Yves Pierre
4)HENAUT Guillaume

(57) Abstract :
The invention relates to a method for manufacturing inserts (41) provided with an electronic module (44) supporting a chip and an antenna (43), comprising the steps of: supplying (30) top and bottom substrate sheets (46) for a plurality of inserts, said substrates being provided with cavities (42) for subsequently inserting an electronic module in each cavity; providing (3 1) an antenna for each insert; providing (33) at least one layer of adhesive; providing (32) an electronic module for each insert; (36) stacking and assembling by lamination (37) a bottom substrate sheet (46), a first layer of adhesive (54), a plurality of antennas (43), a second layer of adhesive (54) and a top substrate sheet (46); cutting (38) the laminated assembly such as to obtain inserts each provided with an antenna; inserting the electronic modules (44) in the cavities (42) after the step of laminating (37) the substrate sheets (46), antennas (43) and layers of adhesive (54) . Said method is characterised by also comprising a step which consists of printing the inner surface of at least one of the substrate sheets (46) with a thickness-compensation layer (55), outside the substrate area (46) intended for receiving the antenna (43).

No. of Pages : 18 No. of Claims : 6

(12) PATENT APPLICATION PUBLICATION
(19) INDIA
(22) Date of filing of Application :22/10/2013

(21) Application No.9105/DELNP/2013 A
(43) Publication Date : 19/12/2014

(54) Title of the invention : AN OFFSHORE SYSTEM

(51) International classification :B63B27/24,B63B27/34,E21B17/01
(31) Priority Document No :PA 2011 00351
(32) Priority Date :06/05/2011
(33) Name of priority country :Denmark
(86) International Application No :PCT/DK2012/050138
Filing Date :26/04/2012
(87) International Publication No :WO 2012/152278
(61) Patent of Addition to Application Number :NA
Filing Date :NA
(62) Divisional to Application Number :NA
Filing Date :NA

(71)**Name of Applicant :**
1)NATIONAL OILWELL VARCO DENMARK I/S
Address of Applicant :Priorparken 480 DK 2605 Br¸ndby Denmark
(72)**Name of Inventor :**
1)CHRISTENSEN Claus Dencker

(57) Abstract :
An offshore system for transferring fluid at least partly below sea surface e.g. for transferring oil from a well (9) to a sea surface installation (4). The offshore system comprises a flexible transporting unit (3) such as a pipe and a first movable structure fix point (4a) with a nominal position and a second structure fix point (5a) arranged at a distance to seabed and at a lower position relative to the sea surface than the first structure fix point (4a). The flexible transporting unit is fixed to respectively the first structure fix point (4a) and the second structure fix point (5a) to provide a catenary liftable length section of the flexible transporting unit extending between the first structure fix point (4a) and the second structure fix point (5a) wherein the catenary liftable length section has a touch down point at seabed at nominal position and if the first structure fix point (4a) is moved out of its nominal position the distance to the second structure fix point (5a) can be increased sufficiently to lift the catenary liftable length section from the seabed to form a catenary.

No. of Pages : 41 No. of Claims : 25

(12) PATENT APPLICATION PUBLICATION
(19) INDIA
(22) Date of filing of Application :22/10/2013
(21) Application No.9106/DELNP/2013 A
(43) Publication Date : 19/12/2014

(54) Title of the invention : NON LINEAR STIFFNESS ROLLER ASSEMBLY

(51) International classification :B66B7/04,F16C13/00
(31) Priority Document No :NA
(32) Priority Date :NA
(33) Name of priority country :NA
(86) International Application No :PCT/US2011/038374
Filing Date :27/05/2011
(87) International Publication No :WO 2012/166097
(61) Patent of Addition to Application Number :NA
Filing Date :NA
(62) Divisional to Application Number :NA
Filing Date :NA

(71)**Name of Applicant :**
1)OTIS ELEVATOR COMPANY
Address of Applicant :Ten Farm Springs Road Farmington CT 06032 2568 U.S.A.
(72)**Name of Inventor :**
1)FARGO Richard N.
2)GUILANI Brad
3)HUBBARD James L.
4)WEST Adrian D.

(57) Abstract :
A roller apparatus (202,203,204,800,900,1000) is provided. The roller apparatus (202,203,204,800,900,1000) may include a bearing wheel (212,812,912,1012) configured to rotatably couple the roller apparat us (202,203,204,800,900,1000) to a roller shaft (210), and a resilient mem ber (214,3 14,414,5 14,614,714,814, 914,1014) radially disposed about the bearing wheel (212,812,912,1012) and configured to contact a guiderail (112) at different magnitudes of loads. The resilient member (214,3 14,414,5 14,614,714,814,914,1014) may include a first section (216,3 16,416,5 16,616,716,816,91 6,1016) of a first diameter and a second section (218,3 18,418,5 18,618,718,818,918,101 8) of a second diameter. The first section (216,3 16,4 16,5 16,616,716,816,916,1016) may be caused to de flect in response to loads within a first load range, while the second section (218,3 18,418,5 18,618,718,818,91 8,1018) may be caused to deflect in re sponse to loads within a second load range. The resilient member (214,3 14,414,5 14,614,714,814,914,1014) may exhibit a stepwise increase in stiffness with a gradual increase in load.

No. of Pages : 39 No. of Claims : 20

(12) PATENT APPLICATION PUBLICATION
(19) INDIA
(22) Date of filing of Application :23/10/2013
(21) Application No.9130/DELNP/2013 A
(43) Publication Date : 19/12/2014

(54) Title of the invention : DEVICE AND METHOD FOR CONVEYING THICK MATTER IN PARTICULAR CONCRETE WITH ANGLE OF ROTATION MEASUREMENT

(51) International classification :E04G21/04,B66C23/84,E02F9/12
(31) Priority Document No :10 2011 018 267.5
(32) Priority Date :20/04/2011
(33) Name of priority country :Germany
(86) International Application No :PCT/EP2012/001502
Filing Date :04/04/2012
(87) International Publication No :WO 2012/143092
(61) Patent of Addition to Application Number :NA
Filing Date :NA
(62) Divisional to Application Number :NA
Filing Date :NA

(71)**Name of Applicant :**
1)SCHWING GMBH
Address of Applicant :Heerstr. 9 27 44647 Herne Germany
(72)**Name of Inventor :**
1)TRMPER Siegfried
2)VIERKOTTEN Reiner

(57) Abstract :
In a device for conveying thick matter, in particular concrete, with a thick matter pump, with a conveying line which leads away from the pump and with a mast boom which receives the conveying line, has at least one mast arm and is arranged on a slewing bogie preferably provided with a slewing ring, which slewing bogie, for the purpose of the angular orientation of the mast boom, can be rotated by means of a drive, in particular a hydraulic motor with a transmission arranged thereon, preferably via a transmission pinion acting on the slewing ring of the slewing bogie, and with a measuring device which is equipped with angle of rotation sensors and is intended for measuring the angle of rotation of the slewing bogie, the angle of rotation of the slewing bogie is measured by a direct measurement of the angle of rotation of the drive or of the transmission arranged between the motor and slewing bogie.

No. of Pages : 19 No. of Claims : 14

(12) PATENT APPLICATION PUBLICATION
(19) INDIA
(22) Date of filing of Application :23/10/2013
(21) Application No.9131/DELNP/2013 A
(43) Publication Date : 19/12/2014

(54) Title of the invention : PART COMPRISING A COATING OVER A METAL SUBSTRATE MADE OF A SUPERALLOY SAID COATING INCLUDING A METAL SUBLAYER

(51) International classification :C23C10/00,C23C28/00,C23C30/00
(31) Priority Document No :1153678
(32) Priority Date :29/04/2011
(33) Name of priority country :France
(86) International Application No :PCT/FR2012/050890
Filing Date :24/04/2012
(87) International Publication No :WO 2012/146864
(61) Patent of Addition to Application Number :NA
Filing Date :NA
(62) Divisional to Application Number :NA
Filing Date :NA

(71)**Name of Applicant :**
1)SNECMA
Address of Applicant :2 Boulevard du Gnral Martial Valin F 75015 Paris France
2)CENTRE NATIONAL DE LA RECHERCHE SCIENTIFIQUE
3)INSTITUT NATIONAL POLYTECHNIQUE
4)UNIVERSITE PAUL SABATIER TOULOUSE III
(72)**Name of Inventor :**
1)GUEDOU Jean Yves
2)BOIDOT Mathieu
3)ESTOURNES Claude
4)MONCEAU Daniel
5)OQUAB Djar
6)SELEZNEFF Serge

(57) Abstract :
The invention relates to a part comprising a coating over a mtal substrate made of a superalloy, the coating including a mtal sublayer covering said substrate, characterized in that said mtal sublayer contains a nickel aluminide base and further contains 0.5 and 0.95 atomic % of one or more stabilizing lments M of the gamma and gamma prime phases from the group consisting of Cu and Ag.

No. of Pages : 25 No. of Claims : 11

(12) PATENT APPLICATION PUBLICATION
(19) INDIA
(22) Date of filing of Application :23/10/2013
(21) Application No.9132/DELNP/2013 A
(43) Publication Date : 19/12/2014

(54) Title of the invention : LOW EMISSION FIBRE MATRIX MATERIAL CURABLE THERMALLY BY RADICAL POLYMERIZATION

(51) International classification :C08K3/00,C08K7/02,C08K7/14
(31) Priority Document No :10 2011 050 035.9
(32) Priority Date :02/05/2011
(33) Name of priority country :Germany
(86) International Application No:PCT/EP2012/057339
Filing Date :23/04/2012
(87) International Publication No :WO 2012/150138
(61) Patent of Addition to Application Number :NA
Filing Date :NA
(62) Divisional to Application Number :NA
Filing Date :NA

(71)**Name of Applicant :**
1)ELANTAS GMBH
Address of Applicant :Abelstrae 43 46483 Wesel Germany
2)BYK CHEMIE GMBH
(72)**Name of Inventor :**
1)HINNERWISCH Jrg
2)REESTMAN Gerard Hubertus Louis
3)STANNEK Peter Walter
4)KOSKA Michael Alfred
5)LIENERT Klaus W.

(57) Abstract :
Fibre-matrix material curable thermally by radical polymerization, comprising (A)a polymeric matrix curable thermally by radical polymerization, (B)at least one kind of reinforcing fibres and (C)at least one particulate initiator of the radical polymerization, having an average particle size of 5nm to 500mp , as measured by static light scattering, and selected from the group consisting of benzpinacol and substituted benzpinacols; processes for producing it, and its use for producing fibre-reinforced thermoset mouldings.

No. of Pages : 20 No. of Claims : 15

(12) PATENT APPLICATION PUBLICATION
(19) INDIA
(22) Date of filing of Application :23/10/2013
(21) Application No.9133/DELNP/2013 A
(43) Publication Date : 19/12/2014

(54) Title of the invention : A ONE PIECE CLOSURE FOR EQUIPPING A CONTAINER

(51) International classification :B65D47/08
(31) Priority Document No :11168943.6
(32) Priority Date :07/06/2011
(33) Name of priority country :EPO
(86) International Application No :PCT/EP2012/060817
Filing Date :07/06/2012
(87) International Publication No :WO 2012/168377
(61) Patent of Addition to Application Number :NA
Filing Date :NA
(62) Divisional to Application Number :NA
Filing Date :NA

(71)**Name of Applicant :**
1)NESTEC S.A.
Address of Applicant :Avenue Nestl 55 CH 1800 Vevey Switzerland
(72)**Name of Inventor :**
1)CERVENY Jean Paul

(57) Abstract :
The present invention concerns a one-piece closure (16) for a container (10) having an aperture, comprising: - a base por tion (22) that inwardly defines an opening centred about a base portion longitudinal axis (L) and that is intended to be mounted on the container neck, - a hinged cap (24) that is linked to the base portion by an outside hinge member (26), the hinge member having two opposite ends (26a, 26b) that are respectively connected to the base portion and the cap, the cap being movable between a closed position in which it closes the aperture of the base por tion and an open position in which the aperture is left clear, characterized in that the two op posite ends (26a, 26b) of the hinge member (26) are aligned along an axis (I) that is in clined with respect to the base portion longit udinal axis (L) when the cap is in the closed position.

No. of Pages : 22 No. of Claims : 11

(12) PATENT APPLICATION PUBLICATION
(19) INDIA
(22) Date of filing of Application :23/10/2013
(21) Application No.9134/DELNP/2013 A
(43) Publication Date : 19/12/2014

(54) Title of the invention : NUTRITIONAL PRODUCTS COMPRISING HUMAN MILK OLIGOSACCHARIDES AND METHODS FOR MANUFACTURE THEREOF

(51) International classification :A23L1/29,C07H3/06,C07H15/04
(31) Priority Document No :11166109.6
(32) Priority Date :13/05/2011
(33) Name of priority country :EPO
(86) International Application No :PCT/EP2012/058639
Filing Date :10/05/2012
(87) International Publication No :WO 2012/156273
(61) Patent of Addition to Application Number :NA
Filing Date :NA
(62) Divisional to Application Number :NA
Filing Date :NA

(71)**Name of Applicant :**
1)NESTEC S.A.
Address of Applicant :Av. Nestl 55 CH 1800 Vevey Switzerland
(72)**Name of Inventor :**
1)BRASSART Dominique
2)DEKANY Gyula
3)ERDMANN Peter
4)SCHWARZ Andrea
5)SPRENGER Norbert

(57) Abstract :
A method for the manufacture an infant formula or an infant nutritional product comprising mixture of human milk oligosaccharides is disclosed. The method involves the catalytic hydrogenolysis of compounds of the general formula 1 and 2 with particular oligosaccharide profiles.

No. of Pages : 43 No. of Claims : 21

(12) PATENT APPLICATION PUBLICATION
(19) INDIA
(22) Date of filing of Application :22/10/2013
(21) Application No.9114/DELNP/2013 A
(43) Publication Date : 19/12/2014

(54) Title of the invention : WINDSCREEN WIPER DEVICE

(51) International classification :B60S1/38
(31) Priority Document No :NA
(32) Priority Date :NA
(33) Name of priority country :NA
(86) International Application No :PCT/EP2011/055854
Filing Date :13/04/2011
(87) International Publication No :WO 2012/139645
(61) Patent of Addition to Application Number :NA
Filing Date :NA
(62) Divisional to Application Number :NA
Filing Date :NA

(71)**Name of Applicant :**
1)FEDERAL MOGUL S.A.
Address of Applicant :Avenue Champion B 6790 Aubange Belgium
(72)**Name of Inventor :**
1)BOLAND Xavier

(57) Abstract :
A windscreen wiper device (1) of the flat blade type, par ticularly for automobiles, comprising an elastic, elongated carrier element, as well as an elongated wiper blade (2) of a flexible material, which can be placed in abutment with a windscreen to be wiped, which wiper blade in cludes at least one longitudinal groove (3), in which groove at least one longitudinal strip (4) of the carrier element is disposed, which windscreen wiper device comprises a connecting device (5) for an oscillating arm, wherein said oscillating arm can be pivotally connected to said connecting device about a pivot axis near one end thereof, with the special feature that said connecting device is connected to the flexible material of said wiper blade by at least one pin (14), wherein said pin cooperates with a recess (21) provided along an exterior edge (20) of said longitudinal strip in or der to block any movement of said wiper blade in longitudinal direction thereof relative to said longitudinal strip at the location of the interconnec tion of said connecting device and said wiper blade.

No. of Pages : 35 No. of Claims : 20

(12) PATENT APPLICATION PUBLICATION
(19) INDIA
(22) Date of filing of Application :22/10/2013
(21) Application No.9115/DELNP/2013 A
(43) Publication Date : 19/12/2014

(54) Title of the invention : ADENO ASSOCIATED VIRUS VIRIONS WITH VARIANT CAPSID AND METHODS OF USE THEREOF

(51) International classification :A61K48/00,C12N15/63
(31) Priority Document No :61/478355
(32) Priority Date :22/04/2011
(33) Name of priority country :U.S.A.
(86) International Application No :PCT/US2012/034413
Filing Date :20/04/2012
(87) International Publication No :WO 2012/145601
(61) Patent of Addition to Application Number :NA
Filing Date :NA
(62) Divisional to Application Number :NA
Filing Date :NA

(71)**Name of Applicant :**
1)THE REGENTS OF THE UNIVERSITY OF CALIFORNIA
Address of Applicant :1111 Franklin Street Twelfth Floor Oakland California 94607 5200 U.S.A.
(72)**Name of Inventor :**
1)SCHAFFER David V.
2)KLIMCZAK Ryan R.
3)KOERBER James T.
4)FLANNERY John G.
5)DALKARA MOUROT Deniz
6)VISEL Meike
7)BYRNE Leah C.T.

(57) Abstract :
The present disclosure provides adeno-associated virus (AAV) virions with altered capsid protein, where the AAV virions exhibit greater infectivity of retinal cells, when administered via intravitreal injection, compared to wild-type AAV. The present disclosure further provides methods of delivering a gene product to a retinal cell in an individual, and methods of treating ocular disease.

No. of Pages : 76 No. of Claims : 27

(12) PATENT APPLICATION PUBLICATION
(19) INDIA
(22) Date of filing of Application :22/10/2013
(21) Application No.9116/DELNP/2013 A
(43) Publication Date : 19/12/2014

(54) Title of the invention : GALLIUM COMPLEXES PHARMACEUTICAL COMPOSITIONS AND METHODS OF USE

(51) International classification :A61K31/00,A61K38/05,C07C59/00
(31) Priority Document No :61/467170
(32) Priority Date :24/03/2011
(33) Name of priority country :U.S.A.
(86) International Application No :PCT/US2012/030267
Filing Date :23/03/2012
(87) International Publication No :WO 2012/129473
(61) Patent of Addition to Application Number :NA
Filing Date :NA
(62) Divisional to Application Number :NA
Filing Date :NA

(71)**Name of Applicant :**
1)GENTA INCORPORATED
Address of Applicant :200 Connell Drive Berkeley Heights New Jersey 07922 U.S.A.
(72)**Name of Inventor :**
1)THOTTATHIL John K.
2)WARRELL Raymond P. Jr.

(57) Abstract :
The present invention provides complexes of gallium with a ligand methods of making the complexes methods of using the complexes and pharmaceutical gallium compositions comprising the complexes in particular those compositions suitable for therapeutic oral administration.

No. of Pages : 32 No. of Claims : 15

(12) PATENT APPLICATION PUBLICATION
(19) INDIA
(22) Date of filing of Application :22/10/2013
(21) Application No.9117/DELNP/2013 A
(43) Publication Date : 19/12/2014

(54) Title of the invention : ALUMINUM PHOSPHORUS ACID SALTS AS EPOXY RESIN CURE INHIBITORS

(51) International classification :C08K5/53,C08K5/5313,C08K5/5317
(31) Priority Document No :61/487851
(32) Priority Date :19/05/2011
(33) Name of priority country :U.S.A.
(86) International Application No :PCT/US2012/036212
Filing Date :03/05/2012
(87) International Publication No :WO 2012/158353
(61) Patent of Addition to Application Number :NA
Filing Date :NA
(62) Divisional to Application Number :NA
Filing Date :NA

(71)**Name of Applicant :**
1)CHEMTURA CORPORATION
Address of Applicant :199 Benson Road Middlebury CT 06749 U.S.A.
(72)**Name of Inventor :**
1)TIMBERLAKE Larry D.
2)HANSON Mark V.
3)BOL Kenneth

(57) Abstract :
Certain aluminum salts of organic phosphorus acids are found to have a strong effect on inhibiting the epoxy cure rate in epoxy formulations. The substances act catalytically and can be used at a low level in an epoxy formulation to adjust the reactivity of a resin formulation to give longer gel times. Compositions and methods of preparing and using the compositions are disclosed.

No. of Pages : 30 No. of Claims : 20

(12) PATENT APPLICATION PUBLICATION
(19) INDIA
(22) Date of filing of Application :24/10/2013
(21) Application No.9164/DELNP/2013 A
(43) Publication Date : 19/12/2014

(54) Title of the invention : ADHESIVE TAPE PACKAGING BAG

(51) International classification :A61F13/02,A61K9/70
(31) Priority Document No :2011096574
(32) Priority Date :22/04/2011
(33) Name of priority country :Japan
(86) International Application No :PCT/JP2012/057205
Filing Date :21/03/2012
(87) International Publication No :WO 2012/144287
(61) Patent of Addition to Application Number :NA
Filing Date :NA
(62) Divisional to Application Number :NA
Filing Date :NA

(71)**Name of Applicant :**
1)HISAMITSU PHARMACEUTICAL CO. INC.
Address of Applicant :408 Tashirodaikan machi Tosu shi Saga 8410017 Japan
(72)**Name of Inventor :**
1)MIYACHIKA Takafumi
2)TAKETOMI Hiroyuki

(57) Abstract :
Disclosed is a novel adhesive tape packaging bag which can be easily opened and with wmch the adhesive tape can be easily affixed. The adhesive tape packaging bag (10) contains an adhesive tape (14) comprising: a support (18); and an adhesive layer (12) provided on one surface of the support (18). The adhesive tape packaging bag (10) comprises a release sheet (16) that is detachably attached to the adhesive layer (12). The release sheet (16) is folded with the adhesive tape (14), is sealed inside the folded release tape (16). To ensure that a half of the adhesive layer (12) of the adhesive tape (14) is exposed when the release tape (16) is opened, a part of the hall is temporality fastened by a plurality of temporary fasteners (50-54) arranged at spaced intervals.

No. of Pages : 41 No. of Claims : 11

(12) PATENT APPLICATION PUBLICATION
(19) INDIA
(22) Date of filing of Application :17/10/2013
(21) Application No.8980/DELNP/2013 A
(43) Publication Date : 19/12/2014

(54) Title of the invention : LAPTOP SUSPENSION AND ACCESS STRUCTURE

(51) International classification :A45C11/00,A45C13/02,A45C13/30
(31) Priority Document No :61/477551
(32) Priority Date :20/04/2011
(33) Name of priority country:U.S.A.
(86) International Application No :PCT/EP2012/057295
Filing Date :20/04/2012
(87) International Publication No :WO 2012/143521
(61) Patent of Addition to Application Number :NA
Filing Date :NA
(62) Divisional to Application Number :NA
Filing Date :NA

(71)**Name of Applicant :**
1)SAMSONITE IP HOLDINGS S. R.L.
Address of Applicant :13 15 Avenue de la Libert L 1931 Luxembourg Luxembourg
(72)**Name of Inventor :**
1)YONENO Kenzo

(57) Abstract :
A luggage case (100) may include a compartment (110) for receiving an object and having first and second walls a bottom wall and an opening positioned opposite the bottom wall. A laptop suspension and access system (130) is positioned at least partially within the compartment (110) and may include first second third and fourth straps (132 136 140 144) all coupled together. A first end (133) of the first strap (132) may be coupled to a first wall of the compartment (110). Furthermore a first end (137) of the second strap (136) may be coupled to a second wall of the compartment (110) and a first end (141) of the third strap (140) may be coupled to the second wall of the compartment. Second ends of the first strap the second strap and the third strap may be coupled to a fourth strap (144) at an intersection (146). The second (136) and third (140) straps may be configured to suspend an object.

No. of Pages : 34 No. of Claims : 26

(12) PATENT APPLICATION PUBLICATION
(19) INDIA
(22) Date of filing of Application :17/10/2013
(21) Application No.8981/DELNP/2013 A
(43) Publication Date : 19/12/2014

(54) Title of the invention : MATERIAL HANDLING APPARATUS

(51) International classification :B03C1/02,B65G47/18,B65G65/30
(31) Priority Document No :13/084534
(32) Priority Date :11/04/2011
(33) Name of priority country :U.S.A.
(86) International Application No :PCT/US2012/032834
Filing Date :10/04/2012
(87) International Publication No :WO 2012/142005
(61) Patent of Addition to Application Number :NA
Filing Date :NA
(62) Divisional to Application Number :NA
Filing Date :NA

(71)**Name of Applicant :**
1)MULTISORB TECHNOLOGIES INC.
Address of Applicant :325 Harlem Road Buffalo New York 14224 U.S.A.
(72)**Name of Inventor :**
1)ARNONE Anthony J.
2)HELM Michael J.
3)KERKESLAGER Jason L.
4)PAYNE David S.
5)PERRY David J.
6)POWERS Thomas H.

(57) Abstract :
A material handling apparatus for conveying an article having a ferromagnetic component includes a hopper a discharge and a magnet. The hopper has an inlet and outlet and defines a hopper volume for receiving a plurality of the articles to be conveyed. The discharge is spaced from and downstream of the hopper. The magnet is movable between an attracting position proximate the hopper and a discharge position proximate the discharge.

No. of Pages : 39 No. of Claims : 27

(12) PATENT APPLICATION PUBLICATION
(19) INDIA
(22) Date of filing of Application :17/10/2013
(21) Application No.8982/DELNP/2013 A
(43) Publication Date : 19/12/2014

(54) Title of the invention : SCREENING METHODS

(51) International classification :A01H17/00,A01H3/00
(31) Priority Document No :588048
(32) Priority Date :17/03/2011
(33) Name of priority country :New Zealand
(86) International Application No :PCT/NZ2012/000041
Filing Date :16/03/2012
(87) International Publication No :WO 2012/125050
(61) Patent of Addition to Application Number :NA
Filing Date :NA
(62) Divisional to Application Number :NA
Filing Date :NA

(71)**Name of Applicant :**
1)BIODISCOVERY NEW ZEALAND LIMITED
Address of Applicant :24 Balfour Road Parnell Auckland 1052 New Zealand
(72)**Name of Inventor :**
1)WIGLEY Peter
2)GEORGE Caroline Elizabeth

(57) Abstract :
The present invention relates to methods for the screening identification and/or application of microorganisms and/or compositions of use in imparting beneficial properties to plants and microorganisms and compositions identified therefrom.

No. of Pages : 84 No. of Claims : 56

(12) PATENT APPLICATION PUBLICATION
(19) INDIA
(22) Date of filing of Application :17/10/2013
(21) Application No.8983/DELNP/2013 A
(43) Publication Date : 19/12/2014

(54) Title of the invention : BLOCKAGE MANAGEMENT

(51) International classification :A61M1/00,A61F13/00
(31) Priority Document No :NA
(32) Priority Date :NA
(33) Name of priority country :NA
(86) International Application No :PCT/GB2011/000629
Filing Date :21/04/2011
(87) International Publication No :WO 2012/143665
(61) Patent of Addition to Application Number :NA
Filing Date :NA
(62) Divisional to Application Number :NA
Filing Date :NA

(71)**Name of Applicant :**
1)SMITH & NEPHEW PLC
Address of Applicant :15 Adam Street London WC2N 6LA U.K.
(72)**Name of Inventor :**
1)PERON Yannick Louis

(57) Abstract :
An apparatus and method are disclosed. The apparatus includes: a first layer comprising a plurality of openings each having a first open area; a further layer spaced apart from the first layer comprising a plurality of further openings each having a further open area; and an air impermeable moisture vapour permeable cover layer over the first and further layers. A region between the first and further layers comprises a portion of a flow path for air and/or wound exudate flowing from a wound site and said first open area is less than said further open area.

No. of Pages : 36 No. of Claims : 19

(12) PATENT APPLICATION PUBLICATION
(19) INDIA
(22) Date of filing of Application :17/10/2013
(21) Application No.8984/DELNP/2013 A
(43) Publication Date : 19/12/2014

(54) Title of the invention : ELECTRONIC DEVICE

(51) International classification :H05K5/00
(31) Priority Document No :NA
(32) Priority Date :NA
(33) Name of priority country :NA
(86) International Application No :PCT/JP2012/075719
Filing Date :03/10/2012
(87) International Publication No :WO 2014/054145
(61) Patent of Addition to Application Number :NA
Filing Date :NA
(62) Divisional to Application Number :NA
Filing Date :NA

(71)**Name of Applicant :**
1)SHINDENGEN ELECTRIC MANUFACTURING CO. LTD.
Address of Applicant :2 1 Ohtemachi 2 chome Chiyoda ku Tokyo 1000004 Japan
2)HONDA MOTOR CO. LTD.
(72)**Name of Inventor :**
1)AKASHI Tomoya
2)YANAGISAWA Takeshi
3)TAKAGI Ryota
4)YOSHIMURA Yuki

(57) Abstract :
This electronic device comprises: a substrate; electronic parts provided to a mounting surface of the substrate; a metal cover which covers the electronic components provided to the substrate; a case which houses the substrate the electronic components and the metal cover; and a sealing resin which fills the interior of the case. The sealing resin embeds the substrate and the electronic components and furthermore fills the space on both the interior and exterior sides of the metal cover.

No. of Pages : 32 No. of Claims : 5

(12) PATENT APPLICATION PUBLICATION
(19) INDIA
(22) Date of filing of Application :17/10/2013
(21) Application No.8985/DELNP/2013 A
(43) Publication Date : 19/12/2014

(54) Title of the invention : PHENYL BICYCLIC METHYL AMINE DERIVATIVES AS SPHINGOSINE 1 PHOSPHATE RECEPTORS MODULATORS

(51) International classification	:C07D307/80,C07D307/84,C07F9/38
(31) Priority Document No	:61/475352
(32) Priority Date	:14/04/2011
(33) Name of priority country	:U.S.A.
(86) International Application No	:PCT/US2012/033321
Filing Date	:12/04/2012
(87) International Publication No	:WO 2012/142288
(61) Patent of Addition to Application Number	:NA
Filing Date	:NA
(62) Divisional to Application Number	:NA
Filing Date	:NA

(71)**Name of Applicant :**
1)ALLERGAN INC.
Address of Applicant :2525 Dupont Drive Irvine California 92612 U.S.A.
(72)**Name of Inventor :**
1)TAKEUCHI Janet A.
2)LI Ling
3)IM Wha Bin

(57) Abstract :
The present invention relates to novel phenyl bicyclic methyl amine derivatives processes for preparing them pharmaceutical compositions containing them and their use as pharmaceuticals as modulators of sphingosine 1 phosphate receptors.

No. of Pages : 73 No. of Claims : 12

(12) PATENT APPLICATION PUBLICATION
(19) INDIA
(22) Date of filing of Application :23/10/2013
(21) Application No.9126/DELNP/2013 A
(43) Publication Date : 19/12/2014

(54) Title of the invention : TYRE WITH A TREAD COMPRISING AN EMULSION SBR HAVING A HIGH TRANS CONTENT

(51) International classification :C08L 9/06
(31) Priority Document No :1153879
(32) Priority Date :06/05/2011
(33) Name of priority country :France
(86) International Application No :PCT/EP2012/058257
Filing Date :04/05/2012
(87) International Publication No :WO 2012/152696
(61) Patent of Addition to Application Number :NA
Filing Date :NA
(62) Divisional to Application Number :NA
Filing Date :NA

(71)**Name of Applicant :**
1)COMPAGNIE GENERALE DES ETABLISSEMENTS MICHELIN
Address of Applicant :12 Cours Sablon F 63000 Clermont Ferrand France
2)MICHELIN RECHERCHE ET TECHNIQUE S.A.
(72)**Name of Inventor :**
1)RINGOT Claude

(57) Abstract :
The invention relates to a tyre with a tread comprising a rubber composition containing at least: 35 to 65 phr of an emulsion styrene-butadiene (E-SBR) copolymer, known as the first diene elastomer, having a content of 1,4-trans butadienyl units greater than 50 wt.-% of ail of the butadienyl units; 35 to 65 phr of a polybutadiene (BR), as a second diene elastomer; optionally, 0 to 30 phr of another diene elastomer, known as the third diene elastomer; 90 to 150 phr of a reinforcing inorganic filler; and a plasti - cising System comprising (i) a content A of between 10 and 60 phr of a hydrocarbon resin having a Tg above 20°C and (ii) a content B of between 10 and 60 phr of a plasticiser that is liquid at 20°C and has a Tg below -20°C, wherein A+B is greater than 45 phr. The use of such an emulsion SBR and BR in the quantities required, combined with the high contents of inorganic filler and plasticiser in the tyre tread composition of the invention, provides improved wet grip and durability in relation to a control composition, without negatively affecting rolling rsistance.

No. of Pages : 22 No. of Claims : 12

(12) PATENT APPLICATION PUBLICATION
(19) INDIA
(22) Date of filing of Application :23/10/2013
(21) Application No.9127/DELNP/2013 A
(43) Publication Date : 19/12/2014

(54) Title of the invention : HOT EXTRUSION PROCESS FOR PRODUCING A METAL PART EXTRUSION TOOL FOR IMPLEMENTING IT AND LANDING GEAR ROD THUS PRODUCED

(51) International classification :B21C23/03,B21C23/18,B21K21/00
(31) Priority Document No :1154020
(32) Priority Date :10/05/2011
(33) Name of priority country :France
(86) International Application No :PCT/EP2012/058235
Filing Date :04/05/2012
(87) International Publication No :WO 2012/152687
(61) Patent of Addition to Application Number :NA
Filing Date :NA
(62) Divisional to Application Number :NA
Filing Date :NA

(71)**Name of Applicant :**
1)AUBERT & DUVAL
Address of Applicant :Tour Maine Montparnasse 33 avenue du Maine F 75015 Paris France
(72)**Name of Inventor :**
1)HEBRARD Laurent

(57) Abstract :
Hot extrusion process and tool for producing a mtal part (1), such as a landing gear, possessing a flow stress of 200 MPa or more when cold and comprising a tubular portion (2) one of the two ends of which is extended by a complex shape (3), said process comprising, after heating and hot transfer of the billet (11) to an extrusion press (6): at least one direct extrusion step using a first mandrel (4) in order to produce the complex shape (3); and at least one indirect extrusion step with a second mandrel (5) replacing the first, the second mandrel moving in the same direction and in the same way as the first mandrel (4) in the same extrusion tool (6) so as to produce ail of the tubular portion (2) of the part (1).

No. of Pages : 22 No. of Claims : 24

(12) PATENT APPLICATION PUBLICATION
(19) INDIA
(22) Date of filing of Application :23/10/2013
(21) Application No.9128/DELNP/2013 A
(43) Publication Date : 19/12/2014

(54) Title of the invention : TYRE WITH A TREAD COMPRISING AN EMULSION SBR HAVING A HIGH TRANS CONTENT

(51) International classification :C08L9/06,B60C1/00,C08K5/00
(31) Priority Document No :1153880
(32) Priority Date :06/05/2011
(33) Name of priority country :France
(86) International Application No :PCT/EP2012/058263
Filing Date :04/05/2012
(87) International Publication No :WO 2012/152702
(61) Patent of Addition to Application Number :NA
Filing Date :NA
(62) Divisional to Application Number :NA
Filing Date :NA

(71)**Name of Applicant :**
1)COMPAGNIE GENERALE DES ETABLISSEMENTS MICHELIN
Address of Applicant :12 Cours Sablon F 63000 Clermont ferrand France
2)MICHELIN RECHERCHE ET TECHNIQUE S.A.
(72)**Name of Inventor :**
1)RINGOT Claude

(57) Abstract :
The invention relates to a tyre with a tread comprising a rubber composition containing at least: 40 to 100 phr of an emulsion styrene-butadiene (E-SBR) copolymer, known as the first diene elastomer, having a content of 1,4-trans butadienyl units greater than 50 wt.-% of ail of the butadienyl units; optionally, 0 to 60 phr of another diene elastomer, known as the second diene elastomer; 90 to 150 phr of a reinforcing inorganic filler; and a plasticising System comprising (i) a content A of between 10 and 60 phr of a hydrocarbon resin having a Tg above 20°C and (ii) a content B of between 10 and 60 phr of a plasticiser that is liquid at 20°C and has a Tg below -20°C, wherein A+B is greater than 45 phr. The use of such an emulsion SBR, combined with the high contents of inorganic filler and plasticiser in the tyre tread composition of the invention, provides greatly improved wet grip in relation to a control composition, without negatively affecting rolling rsistance.

No. of Pages : 22 No. of Claims : 12

(12) PATENT APPLICATION PUBLICATION
(19) INDIA
(22) Date of filing of Application :23/10/2013
(21) Application No.9129/DELNP/2013 A
(43) Publication Date : 19/12/2014

(54) Title of the invention : FUELING ENVIRONMENT WIRELESS ARCHITECTURE

(51) International classification :G07F13/02,G07G1/00,G06Q20/32
(31) Priority Document No :61/477918
(32) Priority Date :21/04/2011
(33) Name of priority country :U.S.A.
(86) International Application No :PCT/EP2012/057337
Filing Date :23/04/2012
(87) International Publication No :WO 2012/143544
(61) Patent of Addition to Application Number :NA
Filing Date :NA
(62) Divisional to Application Number :NA
Filing Date :NA

(71)**Name of Applicant :**
1)GILBARCO S.r.l.
Address of Applicant :Via de Cattani 220/G I 50145 Florence Italy
(72)**Name of Inventor :**
1)CARAPELLI Giovanni

(57) Abstract :
A method and system for transmitting data between devices within a fueling environment comprising a wireless mesh network wherein the devices are configured to communicate via the wireless mesh network. A wireless communication device is connected to each device and a middleware executed by the wireless communication device handles communications between the devices and the wireless mesh network.

No. of Pages : 59 No. of Claims : 17

(12) PATENT APPLICATION PUBLICATION
(19) INDIA
(22) Date of filing of Application :22/10/2013
(21) Application No.9107/DELNP/2013 A
(43) Publication Date : 19/12/2014

(54) Title of the invention : CIRCULATION TRANSPORT SYSTEM

(51) International classification :B66B9/10,B66B9/16,B61B13/00
(31) Priority Document No :NA
(32) Priority Date :NA
(33) Name of priority country :NA
(86) International Application No :PCT/US2011/036020
Filing Date :11/05/2011
(87) International Publication No :WO 2012/154178
(61) Patent of Addition to Application Number :NA
Filing Date :NA
(62) Divisional to Application Number :NA
Filing Date :NA

(71)**Name of Applicant :**
1)OTIS ELEVATOR COMPANY
Address of Applicant :Ten Farm Springs Road Farmington Connecticut 06032 U.S.A.
(72)**Name of Inventor :**
1)HSU Arthur C.
2)KUCZEK Andrzej Ernest

(57) Abstract :
An elevator system includes two or more hoistways. One or more elevator cars are located in a first of the two or more hoistways and movable to a second hoistway of the two or more hoistways. The system further includes one or more elevator car transfer mechanisms including a transfer cage receptive of an elevator car of the one or more elevator cars and one or more transfer rails extending from the first hoistway to the second hoistway. The transfer cage is connected to the one or more transfer rails and is configured to transfer the elevator car received in the transfer cage by movement of the transfer cage along the one or more transfer rails from the first hoistway to the second hoistway.

No. of Pages : 20 No. of Claims : 26

(12) PATENT APPLICATION PUBLICATION
(19) INDIA
(22) Date of filing of Application :22/10/2013
(21) Application No.9108/DELNP/2013 A
(43) Publication Date : 19/12/2014

(54) Title of the invention : DRIVE UNIT FOR AIRCRAFT RUNNING GEAR WHEELS

(51) International classification :B64C25/40
(31) Priority Document No :NA
(32) Priority Date :NA
(33) Name of priority country :NA
(86) International Application No :PCT/EP2011/060172
Filing Date :17/06/2011
(87) International Publication No :WO 2012/171589
(61) Patent of Addition to Application Number :NA
Filing Date :NA
(62) Divisional to Application Number :NA
Filing Date :NA

(71)**Name of Applicant :**
1)L 3 COMMUNICATIONS MAGNET MOTOR GMBH
Address of Applicant :Petersbrunner Str. 2 82319 Starnberg Germany
(72)**Name of Inventor :**
1)OSWALD Johann
2)HEEG Manfred

(57) Abstract :
A drive unit (16) for an aircraft running gear (2) having at least a first wheel (4) and a second wheel (6) on a common wheel axis (A), wherein the drive unit (16) is drivingly coupleable to at least one of the first and second wheels (4, 6), is characterized in that the drive unit (16) comprises at least one power output assembly (122, 124) for driving at least one of the first and second wheels (4, 6), with each of the at least one power output assembly (122, 124) comprising a power transmission chain (136) selectively engageable with a sprocket element (108, 110) coupled to one of the first and second wheels (4, 6).

No. of Pages : 53 No. of Claims : 51

(12) PATENT APPLICATION PUBLICATION
(19) INDIA
(22) Date of filing of Application :22/10/2013
(21) Application No.9109/DELNP/2013 A
(43) Publication Date : 19/12/2014

(54) Title of the invention : VAGINAL COMPOSITION BASED ON ALKYL POLYGLUCOSIDES

(51) International classification :A61K31/70,A61K31/20,A61K31/23
(31) Priority Document No :MI2011A000715
(32) Priority Date :29/04/2011
(33) Name of priority country :Italy
(86) International Application No :PCT/IB2012/052119
Filing Date :27/04/2012
(87) International Publication No :WO 2012/147056
(61) Patent of Addition to Application Number :NA
Filing Date :NA
(62) Divisional to Application Number :NA
Filing Date :NA

(71)**Name of Applicant :**
1)EFFIK S.A.
Address of Applicant :Btiment Le Newton 9/11 Rue Jeanne Braconnier F 92366 Meudon la F´ret France
(72)**Name of Inventor :**
1)ARDOLINO Luca Ivan
2)BRUGALI Giuseppe

(57) Abstract :
The present invention regards a vaginal composition based on alkyl polyglycosides, in particular for the treatment of Streptococcus agalactiae infections and other pathogens. In particular, the invention regards a compound belonging to the class of the alkyl glucosides or alkyl polyglucosides for use in the prevention and in the treatment of bacterial infections of the vaginal tract, in particular Streptococcus agalactiae infections and other pathogens. There is also provided for the use of such compound in association to a further active ingredient selected within the category of the middle-chain saturated fatty acids or the glycerol ester derivatives thereof and relative mixture for use as a bacteriaostatic or bactericidal agent in the prevention and in the treatment of the bacterial infections of the vaginal tract. Examples of middle-chain saturated fatty acids or the glycerol ester derivatives thereof which can be used for the subject of the invention are: lauric acid, capric acid, caprylic acid and caproic acid and the glycerol ester derivat ives thereof. These substances are commonly available in the market. Lauric acid and monolaurate (monoglycerol ester of lauric acid) and mixtures thereof shall be used in the preferred formulate. The formulations of the invention are preferably vaginal gels, ointments, vaginal mousse, vaginal tablets, hard and soft vaginal capsules, or vaginal lavages.

No. of Pages : 38 No. of Claims : 22

(12) PATENT APPLICATION PUBLICATION
(19) INDIA
(22) Date of filing of Application :24/10/2013
(21) Application No.9178/DELNP/2013 A
(43) Publication Date : 19/12/2014

(54) Title of the invention : LASER NOZZLE WITH MOBILE ELEMENT

(51) International classification :B23K26/38,B23K26/14
(31) Priority Document No :1154224
(32) Priority Date :16/05/2011
(33) Name of priority country :France
(86) International Application No :PCT/FR2012/050907
Filing Date :25/04/2012
(87) International Publication No :WO 2012/156608
(61) Patent of Addition to Application Number :NA
Filing Date :NA
(62) Divisional to Application Number :NA
Filing Date :NA

(71)**Name of Applicant :**
1)LAIR LIQUIDESOCIETE ANONYME POUR LETUDE ET LEXPLOITATION DES PROCEDES GEORGES CLAUDE
Address of Applicant :75 Quai dOrsay F 75007 Paris France
(72)**Name of Inventor :**
1)JOUANNEAU Thomas
2)DEBECKER Isabelle
3)LEFEBVRE Philippe

(57) Abstract :
The invention relates to a laser nozzle (1 2) that can be used in laser cutting notably with a fibre or disc laser comprising a nozzle body (1) comprising an axial housing (5) passing axially through said nozzle body (1) and comprising a first outlet orifice (11) situated at the front face (1a) of the nozzle body (1) and a mobile element (2) comprising a skirt forming front part (2a) arranged in the axial housing (5) of the nozzle body (1) said mobile element (2) being capable of translational movement in the axial housing (5) of the nozzle body (1) and comprising an axial passage (4) with a second outlet orifice (12) opening onto the skirt forming front part (2a). According to the invention the mobile element (2) is able to move translationally in the axial housing (5) in the direction of the first outlet orifice (11) under the effect of a gas pressure applied to the mobile element (2) until such point as the skirt forming front part (2a) of the mobile element (2) projects out from the axial housing (5) through the first outlet orifice (11) of the front face (1a) of the nozzle body (1) and an elastic element (8) is arranged in the axial housing (5) between the nozzle body (1) and the mobile element (2) said elastic element (8) applying an elastic return force to the mobile element (2) that tends to oppose the translational movement in the axial housing (5) in the direction of the first outlet orifice (11).

No. of Pages : 15 No. of Claims : 11

(12) PATENT APPLICATION PUBLICATION
(19) INDIA
(22) Date of filing of Application :23/10/2013
(21) Application No.9135/DELNP/2013 A
(43) Publication Date : 19/12/2014

(54) Title of the invention : MILK OLIGOSACCHARIDE GALACTOOLIGOSACCHARIDE COMPOSITION FOR INFANT FORMULA CONTAINING THE SOLUBLE OLIGOSACCHARIDE FRACTION PRESENT IN MILK AND HAVING A LOW LEVEL OF MONOSACCHARIDES AND A PROCESS TO PRODUCE THE COMPOSITION

(51) International classification :A23L1/29,A23L1/308,A61K31/702
(31) Priority Document No :11167358.8
(32) Priority Date :24/05/2011
(33) Name of priority country :EPO
(86) International Application No :PCT/EP2012/059562
Filing Date :23/05/2012
(87) International Publication No :WO 2012/160080
(61) Patent of Addition to Application Number :NA
Filing Date :NA
(62) Divisional to Application Number :NA
Filing Date :NA

(71)**Name of Applicant :**
1)NESTEC S.A.
Address of Applicant :Av. Nestl 55 CH 1800 Vevey Switzerland
(72)**Name of Inventor :**
1)BERROCAL Rafael
2)BRAUN Marcel
3)CEVALLOS Agustin
4)MARIE Vanessa
5)RICARD Grgoire

(57) Abstract :
The invention discloses an oligosaccharide mixture derived from cows milk that can be easily spray dried comprising (a) a soluble oligosaccharide population which is the same as that of soluble oligosaccharides found in cows milk and (b) - galactooligosaccharides formed by the action of -galacotsidase on lactose and the milk oligosaccharides. The mixture having a total monosaccharide content of less than 5% w/v and a lactose:oligosaccharide ratio of less than 20. A process for obtaining such a mixture, which includes a nanofiltration step, is disclosed. Nutritional compositions, especially infant formula, comprising said oligosaccharide mixture are also disclosed.

No. of Pages : 37 No. of Claims : 21

(12) PATENT APPLICATION PUBLICATION
(19) INDIA
(22) Date of filing of Application :23/10/2013
(21) Application No.9136/DELNP/2013 A
(43) Publication Date : 19/12/2014

(54) Title of the invention : APPARATUS AND METHOD FOR ENHANCED HGH GENERATION IN HUMANS

(51) International classification :A61F7/00
(31) Priority Document No :13/094799
(32) Priority Date :26/04/2011
(33) Name of priority country :U.S.A.
(86) International Application No :PCT/US2012/035069
Filing Date :26/04/2012
(87) International Publication No :WO 2012/149072
(61) Patent of Addition to Application Number :NA
Filing Date :NA
(62) Divisional to Application Number :NA
Filing Date :NA

(71)**Name of Applicant :**
1)VASPER SYSTEMS LLC
Address of Applicant :62 2241 Kanehoa Place Kamuela Hawaii 96743 U.S.A.
(72)**Name of Inventor :**
1)WASOWSKI Peter Z.

(57) Abstract :
A conditioning process for the enhanced production of human growth hormone in a human has a first step of application of pressurized cooling to the limbs of a subject, who experiences a ramp-up exertion followed by a series of conditioning cycles, followed by a ramp-down cycle. The condition cycles include an interval of intense exertion followed by an interval of reduced exertion, and during ramp-up cycle, conditioning cycle, and ramp-down cycle, the pressure cooling to the limbs is set as a fraction of systolic blood pressure, with the fraction in the range 33% to 220%.

No. of Pages : 36 No. of Claims : 18

(12) PATENT APPLICATION PUBLICATION
(19) INDIA
(22) Date of filing of Application :23/10/2013
(21) Application No.9137/DELNP/2013 A
(43) Publication Date : 19/12/2014

(54) Title of the invention : MEDICAL STOPCOCK

(51) International classification :A61M39/00
(31) Priority Document No :2011066879
(32) Priority Date :25/03/2011
(33) Name of priority country :Japan
(86) International Application No :PCT/JP2012/057319
Filing Date :22/03/2012
(87) International Publication No :WO 2012/133100
(61) Patent of Addition to Application Number :NA
Filing Date :NA
(62) Divisional to Application Number :NA
Filing Date :NA

(71)**Name of Applicant :**
1)TERUMO KABUSHIKI KAISHA
Address of Applicant :44 1 Hatagaya 2 chome Shibuya ku Tokyo 1510072 Japan
(72)**Name of Inventor :**
1)UEDA Yasuhiro
2)TSUKADA Takashi

(57) Abstract :
The present invention is a medical stopcock (1) including a main body (2) and a cock (3) . The main body (2) has a tubular portion (21), an upstream port (22), a downstream port (23) and a side pipe port (24). The cock (3) has a cylindrical portion (31) and a handle (32) . A groove portion (33) is provided on an outer peripheral surface of the cylindrical portion (31). Wall portions (34a) and (34b) functioning as a part of the outer circumferential surface are disposed in an inside of the groove portion (33).

No. of Pages : 35 No. of Claims : 7

(12) PATENT APPLICATION PUBLICATION
(19) INDIA
(22) Date of filing of Application :23/10/2013
(21) Application No.9138/DELNP/2013 A
(43) Publication Date : 19/12/2014

(54) Title of the invention : CONNECTER ASSEMBLY MALE CONNECTER AND FEMALE CONNECTER

(51) International classification :A61M39/02
(31) Priority Document No :2011066069
(32) Priority Date :24/03/2011
(33) Name of priority country :Japan
(86) International Application No :PCT/JP2012/057345
Filing Date :22/03/2012
(87) International Publication No :WO 2012/128321
(61) Patent of Addition to Application Number :NA
Filing Date :NA
(62) Divisional to Application Number :NA
Filing Date :NA

(71)**Name of Applicant :**
1)TERUMO KABUSHIKI KAISHA
Address of Applicant :44 1 Hatagaya 2 chome Shibuya ku Tokyo 1510072 Japan
(72)**Name of Inventor :**
1)UEDA Yasuhiro
2)TSUKADA Takashi

(57) Abstract :
The connecter assembly (1000) of the present invention includes a male connecter (1) and a female connecter (2). The male connecter (1) includes a connecter main body (3), a lock member (4), and an engagement member (5) . When the male connecter (1) and the female connecter (2) are connected to each other, by pressing the connecters into each other, a plurality of claw portions (53) of the engagement member (5) of the male connecter (1) is engaged with a plurality of flange portions (211) of a main body (21) of the female connecter (2) . When the connecter are to be separated from each other, by performing a first operation of pulling away the lock member (4) of the male connecter (1) from the engagement member (5), and a second operation of rotating the lock member (4), engagement of the claw portions (53) is released and the separation is possible.

No. of Pages : 44 No. of Claims : 8

(12) PATENT APPLICATION PUBLICATION
(19) INDIA
(22) Date of filing of Application :24/10/2013
(21) Application No.9183/DELNP/2013 A
(43) Publication Date : 19/12/2014

(54) Title of the invention : STABILISED POLYAMIDE COMPOSITION

(51) International classification :C08L77/00,C08L77/02,C08L77/06
(31) Priority Document No :1101123
(32) Priority Date :13/04/2011
(33) Name of priority country :France
(86) International Application No :PCT/EP2012/056603
Filing Date :12/04/2012
(87) International Publication No :WO 2012/140099
(61) Patent of Addition to Application Number :NA
Filing Date :NA
(62) Divisional to Application Number :NA
Filing Date :NA

(71)**Name of Applicant :**
1)RHODIA OPERATIONS
Address of Applicant :40 rue de la Haie Coq F 93306 Aubervilliers France
(72)**Name of Inventor :**
1)JEOL Stphane
2)BADEL Thierry

(57) Abstract :
The invention relates to a polyamide that has been stabilised in relation to heat light and/or adverse weather conditions through the use of a compound comprising at least one amine function and at least two aliphatic hydroxyl functions. The stabilising compound can also be added to the polyamide in order to form stabilised polyamide compositions.

No. of Pages : 24 No. of Claims : 17

(12) PATENT APPLICATION PUBLICATION
(19) INDIA
(22) Date of filing of Application :23/10/2013
(21) Application No.9151/DELNP/2013 A
(43) Publication Date : 19/12/2014

(54) Title of the invention : A STENT

(51) International classification :A61F2/90
(31) Priority Document No :1106757.6
(32) Priority Date :20/04/2011
(33) Name of priority country :U.K.
(86) International Application No :PCT/GB2012/050882
Filing Date :20/04/2012
(87) International Publication No :WO 2012/143731
(61) Patent of Addition to Application Number :NA
Filing Date :NA
(62) Divisional to Application Number :NA
Filing Date :NA

(71)**Name of Applicant :**
1)ARTERIUS LIMITED
Address of Applicant :64 Broomfield Leeds Yorkshire LS16 7AD U.K.
(72)**Name of Inventor :**
1)BRESSLOFF Neil W.
2)PANT Sanjay
3)AL LAMEE Kadem Gayad

(57) Abstract :
A tubular stent (1) has first and second ends (2,3) and a longitudinal axis (4) therebetween. The tubular stent (1) is formed from a network of struts which defines a cylindrical surface about the longitudinal axis (4), the struts delineating a plurality of cells {23, 30, 31, 32, 33) within the network, there being rows of cells parallel to the longitudinal axis (4). At least one cell in each row is a nodal cell (23). There is an increase in the maximum length parallel to the longitudinal axis (4) of cells from the at (east one nodal cell (23) to a first distal cell (30) in the row that is closer to the first or second end (2, 3) of the tubular stent (1). There is a second distal cell (31) in the row which has a different maximum length parallel to the longitudinal axis (4) from the nodal cell (23) and the first distal cell (30). The network of struts comprises a plurality of circumferential rings (6, 6, 9, 9, 13, 13, 16, 16,17, 17). Each ring (6, 6, 9, 9, 13, 13, 16, 16, 17, 17) extends perpendicularly to the longitudinal axis (4) and the rings are located adjacent to each other parallel to the longitudinal axis (4) to define the cylindrical surface. The circumferential rings (6, 6, 9, 9, 13, 13, 16, 16, 17, 17) are of a wave form. Each circumferential ring (6, 6, 9, 9, 13, 13, 16, 16, 17, 17) has an amplitude parallel to the longitudinal axis (4), such that each wave form comprises a plurality of peaks (7, 10, 14, 18, 20) which extend towards the axial centre (5) of the tubular stent (1) and a plurality of troughs (8, 12, 29, 21, 36) which extend away from the axial centre (5) of the tu - bular stent (1).

No. of Pages : 43 No. of Claims : 14

(12) PATENT APPLICATION PUBLICATION
(19) INDIA
(22) Date of filing of Application :23/10/2013
(21) Application No.9152/DELNP/2013 A
(43) Publication Date : 19/12/2014

(54) Title of the invention : REUSABLE PRESS-IN RETAINER

(51) International classification :F16B21/08,F16B5/06
(31) Priority Document No :61/479534
(32) Priority Date :27/04/2011
(33) Name of priority country :U.S.A.
(86) International Application No :PCT/US2012/035135
Filing Date :26/04/2012
(87) International Publication No :WO 2012/149117
(61) Patent of Addition to Application Number :NA
Filing Date :NA
(62) Divisional to Application Number :NA
Filing Date :NA

(71)**Name of Applicant :**
1)ILLINOIS TOOL WORKS INC.
Address of Applicant :3600 West Lake Avenue Glenview Illinois 60026 U.S.A.
2)HONDA MOTOR CO. LTD.
(72)**Name of Inventor :**
1)LEPPER Mark
2)SWAYNE Andrew Keenan
3)MIHAI Ovidiu C.

(57) Abstract :
An improved snap -in retainer system adapted to join a first component to a second component. The retainer system includes a clip (20) having a proximal head portion (22) and a distal base portion (30) of generally arrowhead construction. The re - tainer system further includes a sleeve (70) including an axial passageway (71) adapted to receive the distal base portion of the clip. The sleeve includes window openings (78) defining lateral ports permitting outboard projection of the wing elements (32) following sliding insertion of the base portion to an intermediate stage within the sleeve. The axial passageway further includes a distal neck (80) adapted to compress the wing elements to an inboard orientation within the interior of the sleeve upon full insertion of the base portion into the sleeve thereby facilitating non - destructive withdrawal and disengagement of the retainer system.

No. of Pages : 30 No. of Claims : 20

(12) PATENT APPLICATION PUBLICATION
(19) INDIA
(22) Date of filing of Application :23/10/2013
(21) Application No.9153/DELNP/2013 A
(43) Publication Date : 19/12/2014

(54) Title of the invention : A DISPOSABLE ARTICLE COMPRISING FIBERS OF POLYMER WAX COMPOSITIONS

(51) International classification :A61L15/22,A61L15/34,C08K5/101
(31) Priority Document No :61/488551
(32) Priority Date :20/05/2011
(33) Name of priority country :U.S.A.
(86) International Application No :PCT/US2012/038538
Filing Date :18/05/2012
(87) International Publication No :WO 2012/162135
(61) Patent of Addition to Application Number :NA
Filing Date :NA
(62) Divisional to Application Number :NA
Filing Date :NA

(71)**Name of Applicant :**
1)THE PROCTER & GAMBLE COMPANY
Address of Applicant :One Procter & Gamble Plaza Cincinnati Ohio 45202 U.S.A.
(72)**Name of Inventor :**
1)ALLEN William Maxwell Jr.
2)BOND Eric Bryan
3)NODA Isao
4)GORLEY Ronald Thomas
5)ISELE Olaf Erik Alexander

(57) Abstract :
Disposable article that include fibers formed from compositions comprising thermoplastic polymers and waxes are disclosed where the wax is dispersed throughout the thermoplastic polymer.

No. of Pages : 51 No. of Claims : 9

(12) PATENT APPLICATION PUBLICATION
(19) INDIA
(22) Date of filing of Application :23/10/2013
(21) Application No.9154/DELNP/2013 A
(43) Publication Date : 19/12/2014

(54) Title of the invention : TWO BELT PASSIVE ROLLER CASE TURNER

(51) International classification :B65G47/244
(31) Priority Document No :13/083171
(32) Priority Date :08/04/2011
(33) Name of priority country :U.S.A.
(86) International Application No :PCT/US2012/029632
Filing Date :19/03/2012
(87) International Publication No :WO 2012/138468
(61) Patent of Addition to Application Number :NA
Filing Date :NA
(62) Divisional to Application Number :NA
Filing Date :NA

(71)**Name of Applicant :**
1)LAITRAM L.L.C.
Address of Applicant :Legal Department 200 Laitram Lane Harahan Louisiana 70123 U.S.A.
(72)**Name of Inventor :**
1)FOURNEY Matthew L.

(57) Abstract :
A case turner and associated method for rotating conveyed articles. The case turner includes a pair of conveyor belts (14, 16) advancing side by side in a conveying direction (18). The belts, which are tilted downward toward each other, have rows of article - supporting rollers (20) that can rotate freely on axes parallel to the conveying direction. Each of the belts advances at a different speed so that an article bridging both belts is rotated as it is conveyed along the belt. The speed differential is set to provide a desired degree of rotation for the length of the two belts.

No. of Pages : 10 No. of Claims : 15

(12) PATENT APPLICATION PUBLICATION
(19) INDIA
(22) Date of filing of Application :24/10/2013
(21) Application No.9163/DELNP/2013 A
(43) Publication Date : 19/12/2014

(54) Title of the invention : SYNTHESIS OF HYDROXYALKYL AMIDES FROM ESTERS

(51) International classification :C07C231/02,C07C303/22,C07D209/12
(31) Priority Document No :61/479446
(32) Priority Date :27/04/2011
(33) Name of priority country :U.S.A.
(86) International Application No :PCT/US2012/031349
Filing Date :30/03/2012
(87) International Publication No :WO 2012/148624
(61) Patent of Addition to Application Number :NA
Filing Date :NA
(62) Divisional to Application Number :NA
Filing Date :NA

(71)**Name of Applicant :**
1)JOHNSON & JOHNSON VISION CARE INC.
Address of Applicant :7500 Centurion Parkway Jacksonville FL 32256 U.S.A.
(72)**Name of Inventor :**
1)MAHADEVAN Shivkumar
2)VENKATASUBBAN Kunisi

(57) Abstract :
Hydroxyamides are synthesized from esters. A process of making hydroxyalkyl amides comprises : reacting an ester with a hydroxyalkyl amine having the formula H2N-R3-OH wherein R3 is a substituted or unsubstituted C2 to C5 alkyl, in the pres ence of a catalyst in an anhydrous solution to form the hydroxyalkyl amides. Monomers suitable for formation of polymeric articles can utilize these hydroxyamides.

No. of Pages : 50 No. of Claims : 17

(12) PATENT APPLICATION PUBLICATION
(19) INDIA
(22) Date of filing of Application :25/10/2013
(21) Application No.9190/DELNP/2013 A
(43) Publication Date : 19/12/2014

(54) Title of the invention : METHODS OF FLAVOR ENCAPSULATION AND MATRIX ASSISTED CONCENTRATION OF AQUEOUS FOODS AND PRODUCTS PRODUCED THEREFROM

(51) International classification :A23L1/22,A23L3/44
(31) Priority Document No :13/085088
(32) Priority Date :12/04/2011
(33) Name of priority country :U.S.A.
(86) International Application No :PCT/US2012/033068
Filing Date :11/04/2012
(87) International Publication No :WO 2012/142122
(61) Patent of Addition to Application Number :NA
Filing Date :NA
(62) Divisional to Application Number :NA
Filing Date :NA

(71)**Name of Applicant :**
1)FRITO LAY NORTH AMERICA INC.
Address of Applicant :7701 Legacy Drive Plano TX 75024 4099 U.S.A.
2)THE BOARD OF TRUSTEES OF THE UNIVERSITY OF ILLINOIS
(72)**Name of Inventor :**
1)GEORGE Eapen
2)GIVEN Peter S.
3)GROVER Julie Anne
4)GUARDIOLA Lia
5)PADUA Graciela Wild
6)WANG Yi

(57) Abstract :
Flavor encapsulation is generally performed by mixing flavor with a prolamin solution and drying the mixture into powdered forms of encapsulated flavor. In one embodiment, flavor and zein are separately dispersed in an alcohol-water mixture of appropriate ratio prior to mixing. In another embodiment, an aqueous food comprising bioactive components is mixed with the prolamin solution, thereby initiating precipitation of the prolamin and concentration of the bioactive components in said aqueous food. Resulting powdered forms of encapsulated flavor comprise the bioactive components from the aqueous food. In another embodiment, a two-phase drying process may be employed comprising removal of alcohol for evaporation- induced-self-assembly of zein microstructures, followed by removal of remaining water to produce said powdered form.

No. of Pages : 51 No. of Claims : 29

(12) PATENT APPLICATION PUBLICATION
(19) INDIA
(22) Date of filing of Application :25/10/2013
(21) Application No.9191/DELNP/2013 A
(43) Publication Date : 19/12/2014

(54) Title of the invention : METHODS FOR DETECTING CONTAMINANTS IN SOLUTIONS CONTAINING GLUCOSE POLYMERS

(51) International classification :G01N33/50,C12Q1/02,C12Q1/22
(31) Priority Document No :1153050
(32) Priority Date :08/04/2011
(33) Name of priority country :France
(86) International Application No :PCT/FR2012/050755
Filing Date :06/04/2012
(87) International Publication No :WO 2012/143647
(61) Patent of Addition to Application Number :NA
Filing Date :NA
(62) Divisional to Application Number :NA
Filing Date :NA

(71)**Name of Applicant :**
1)ROQUETTE FRERES
Address of Applicant :1 rue de la Haute Loge F 62136 Lestrem France
(72)**Name of Inventor :**
1)LANOS Pierre
2)HACINE GHERBI Hla
3)ALLAIN Fabrice
4)CARPENTIER Mathieu
5)DENYS Agn¨s

(57) Abstract :
The invention relates to a method for detecting contaminants in glucose polymers, said contaminants being capable of triggering, separately or in combination, an inflammatory reaction, characterized in that it includes at least one in vitro inflammatory response test using a cell line enabling at least one inflammatory response factor to be detected, the cell line being either a macrophage or a macrophage-differentiated cell line, or a cell expressing one or more Toll-like receptors (TLRs) or NOD-like receptors such as TLR2, TLR4 or NOD2 and enabling the responses of the receptor(s) to be detected, or a combination thereof.

No. of Pages : 53 No. of Claims : 30

(12) PATENT APPLICATION PUBLICATION
(19) INDIA
(22) Date of filing of Application :25/10/2013
(21) Application No.9192/DELNP/2013 A
(43) Publication Date : 19/12/2014

(54) Title of the invention : ULTRASONIC DEVICE FOR CUTTING AND COAGULATING

(51) International classification :A61B17/32
(31) Priority Document No :61/479901
(32) Priority Date :28/04/2011
(33) Name of priority country :U.S.A.
(86) International Application No :PCT/US2012/035508
Filing Date :27/04/2012
(87) International Publication No :WO 2012/149361
(61) Patent of Addition to Application Number :NA
Filing Date :NA
(62) Divisional to Application Number :NA
Filing Date :NA

(71)**Name of Applicant :**
1)ETHICON ENDO SURGERY INC.
Address of Applicant :4545 Creek Road Cincinnati OH 45242 U.S.A.
(72)**Name of Inventor :**
1)BALEK Stephen J.
2)DANNAHER William D.
3)DRAGINOFF Carl J. Jr.
4)KIMBALL Cory G.
5)KOHN David L.
6)RUPP Kip M.
7)SMITH Eric B.
8)SMITH Richard C.
9)TELLIO Karalyn R.
10)ROBERTSON Galen C.

(57) Abstract :
An ultrasonic assembly that is configured to permit selective cutting, coagulation, and fine dissection required in fine and delicate surgical procedures. The balanced blade provides a rounded distal end and concave edges to promote fine dissection and cutting in a variety of surgical procedures. The blade is curved for improved visibility at the blade tip and is designed to provide a multitude of tissue effects: coagulation, cutting, dissection, spot coagulation, tip penetration and tip scoring. The assembly features hand activation configured to provide an ergonomical grip and operation for the surgeon. The assembly further features user selectable blade rotation. A finger switch is placed in the range of the natural axial motion of the users index finger, whether gripping the surgical instrument right-handed or left handed.

No. of Pages : 40 No. of Claims : 11

(12) PATENT APPLICATION PUBLICATION
(19) INDIA
(22) Date of filing of Application :25/10/2013
(21) Application No.9193/DELNP/2013 A
(43) Publication Date : 19/12/2014

(54) Title of the invention : LIQUID EJECTION USING DROP CHARGE AND MASS

(51) International classification :B41J2/08,B41J2/115
(31) Priority Document No :13/115434
(32) Priority Date :25/05/2011
(33) Name of priority country :U.S.A.
(86) International Application No :PCT/US2012/039071
Filing Date :23/05/2012
(87) International Publication No :WO 2012/162354
(61) Patent of Addition to Application Number :NA
Filing Date :NA
(62) Divisional to Application Number :NA
Filing Date :NA

(71)**Name of Applicant :**
1)EASTMAN KODAK COMPANY
Address of Applicant :343 State Street Rochester NY 14650 2201 U.S.A.
(72)**Name of Inventor :**
1)PANCHAWAGH Hrishikesh V.
2)MARCUS Michael Alan
3)KATERBERG James A.

(57) Abstract :
A continuous liquid ejection system includes a liquid chamber in fluidic communication with a nozzle. The liquid chamber contains liquid under pressure sufficient to eject a liquid jet through the nozzle. A drop device is associated with the liquid jet. The drop forming device is actuatable to produce a modulation in the liquid jet to selectively cause portions of the liquid jet to break off into one or more pairs of drops traveling along a path. Each drop pair is separated on average by a drop pair period. Each drop pair includes a first drop and a second drop. The drop formation device is also actuatable to produce a modu lation in the liquid jet to selectively cause portions of the liquid jet to break off into one or more third drops traveling along the path separated on average by the same drop pair period. The third drop is larger than the first drop and the second drop. A charging device includes a charge electrode associated with the liquid jet and a source of varying elec trical potential between the charge electrode and the liquid jet. The source of varying electrical potential provides a waveform that includes a period that is equal to the period of formation of the drop pairs or the third drops, the drop pair period. The waveform also includes a first distinct voltage state and a second distinct voltage state. The char ging device and the drop formation device are synchronized to produce a first charge to mass ratio on the first drop of the drop pair, a second charge to mass ratio on the second drop of the drop pair, and a third charge to mass ratio on the third drop. The third charge to mass ratio is substantially the same as the first charge to mass ratio. A deflection device causes the first drop of the drop pair having the first charge to mass ratio to travel along a first path, and causes the second drop of the drop pair having the second charge to mass ratio to travel along a second path, and causes the third drop having a third charge to mass ratio to travel along a third path. The third path is substantially the same as the first path.

No. of Pages : 68 No. of Claims : 42

(12) PATENT APPLICATION PUBLICATION
(19) INDIA
(22) Date of filing of Application :24/10/2013
(21) Application No.9165/DELNP/2013 A
(43) Publication Date : 19/12/2014

(54) Title of the invention : METHOD AND DEVICE FOR DETERMINING THE POWER OUTPUT BY A PHOTOVOLTAIC INSTALLATION

(51) International classification :H01L31/04,H02J3/38
(31) Priority Document No :10 2011 017 694.2
(32) Priority Date :28/04/2011
(33) Name of priority country :Germany
(86) International Application No :PCT/EP2012/057568
Filing Date :25/04/2012
(87) International Publication No :WO 2012/146618
(61) Patent of Addition to Application Number :NA
Filing Date :NA
(62) Divisional to Application Number :NA
Filing Date :NA

(71)**Name of Applicant :**
1)SIEMENS AKTIENGESELLSCHAFT
Address of Applicant :Wittelsbacherplatz 2 80333 M¼nchen Germany
(72)**Name of Inventor :**
1)BAMBERGER Joachim
2)GROTHMANN Ralph
3)HEESCHE Kai
4)HOFFMANN Clemens
5)METZGER Michael

(57) Abstract :
The present solution improves the usability of photovoltaic installations (PV installations) by taking account of shading information of adjacent PV installations for predicting the power output by a relevant PV installation. In particular cloud movements and cloud shapes are taken into account thereby improving prediction accuracy. It is advantageous that short term predictions concerning e.g. the next 15 minutes are possible and a substitute energy source can be activated accordingly in a timely manner prior to a dip in the power output by the PV installation. The invention can be used e.g. in the domain of renewable energies PV installations or smart grids.

No. of Pages : 18 No. of Claims : 15

(12) PATENT APPLICATION PUBLICATION
(19) INDIA
(22) Date of filing of Application :24/10/2013
(21) Application No.9166/DELNP/2013 A
(43) Publication Date : 19/12/2014

(54) Title of the invention : DEVICE FOR PRODUCING TUBULAR STRUCTURES

(51) International classification :B29D23/20,B29C53/50,B31B1/64
(31) Priority Document No :10 2011 001 547.7
(32) Priority Date :24/03/2011
(33) Name of priority country :Germany
(86) International Application No :PCT/EP2012/051674
Filing Date :01/02/2012
(87) International Publication No :WO 2012/126656
(61) Patent of Addition to Application Number :NA
Filing Date :NA
(62) Divisional to Application Number :NA
Filing Date :NA

(71)**Name of Applicant :**
1)PACKSYS GLOBAL (SWITZERLAND) LTD.
Address of Applicant :Joweid Zentrum 1 CH 8630 R¼ti Switzerland
(72)**Name of Inventor :**
1)WEBER Ren

(57) Abstract :
The invention relates to a device for producing tubular structures for packaging tubes, comprising an elongate mandrel (3) extending axially, around which a substrate web can be subjected to a forming process to produce a tubular moulding (4), where, within the mandrel (3), there are a plurality of gas-outlet apertures (15) to which compressed gas can be applied to produce a gas cushion, in particular an air cushion, between the mandrel (3) and the tubular moulding (4), and where there are welding means for welding the tubular moulding, and where, with the aid of means (19) arranged radially adjacent to the mandrel (3) and capable of providing a combination of pressure-application and conveying, the tubular moulding (4) can be forced radially inwards in a direction towards a mandrel surface (16) which belongs to the mandrel (3) and which is convexly curved in a circumferential direction, and the tubular moulding (4) can be transported in a direction of the longitudinal direction of the mandrel (3) by virtue of a frictional effect between the means and the tubular moulding (4). The invention provides that the curved mandrel surface, at least sectionally, has been formed by the microporous and/or nanoporous material which has the gas-outlet apertures in the form of pores.

No. of Pages : 29 No. of Claims : 15

(12) PATENT APPLICATION PUBLICATION
(19) INDIA
(22) Date of filing of Application :24/10/2013
(21) Application No.9167/DELNP/2013 A
(43) Publication Date : 19/12/2014

(54) Title of the invention : DEVICE FOR REDUCING THE VIBRATIONS OF A TUBE BUNDLE OF A HEAT EXCHANGER INSIDE ITS SHELL

(51) International classification :F28D7/16,F28F9/013
(31) Priority Document No :11382143.3
(32) Priority Date :11/05/2011
(33) Name of priority country :EPO
(86) International Application No :PCT/EP2012/058618
Filing Date :10/05/2012
(87) International Publication No :WO 2012/152860
(61) Patent of Addition to Application Number :NA
Filing Date :NA
(62) Divisional to Application Number :NA
Filing Date :NA

(71)**Name of Applicant :**
1)BORGWARNER EMISSIONS SYSTEMS SPAIN S.L.
Address of Applicant :Carretera de Zamanes 20 E 36315 Vigo Pontevedra Spain
(72)**Name of Inventor :**
1)GRANDE FERN NDEZ Jos Antonio
2)CHAMADOIRA GMEZ ngel

(57) Abstract :
The present invention relates to a device for reducing the vibrations of a tube bundle of a heat exchanger inside its shell wherein this device allows a secure and quick insertion after the bundle has been manufactured. This easy insertion after manufacturing the bundle allows the high temperatures to which the bundle is subjected for the attachment by means of brazing to not affect the properties of the device particularly the elasticity achieved by means of tempering for example.

No. of Pages : 20 No. of Claims : 9

(12) PATENT APPLICATION PUBLICATION
(19) INDIA
(22) Date of filing of Application :25/10/2013
(21) Application No.9198/DELNP/2013 A
(43) Publication Date : 19/12/2014

(54) Title of the invention : NOVEL BIS (TRIAZINYLAMINO) STILBENE DERIVATIVES

(51) International classification :C07D251/68,C11D3/42,D21H21/30
(31) Priority Document No :11003442.8
(32) Priority Date :27/04/2011
(33) Name of priority country :EPO
(86) International Application No :PCT/EP2012/001648
Filing Date :17/04/2012
(87) International Publication No :WO 2012/146353
(61) Patent of Addition to Application Number :NA
Filing Date :NA
(62) Divisional to Application Number :NA
Filing Date :NA

(71)**Name of Applicant :**
1)CLARIANT INTERNATIONAL LTD
Address of Applicant :Rothausstrasse 61 CH 4132 Muttenz Switzerland
(72)**Name of Inventor :**
1)KLEIN Cedric
2)REVEAUD Frederic
3)JACKSON Andrew Clive
4)ATKINSON David

(57) Abstract :
The instant invention relates to novel water soluble bis-triazinylamino)-stilbene optical brightening agents, a process for their preparation and their use for whitening natural and synthetic materials.

No. of Pages : 51 No. of Claims : 9

(12) PATENT APPLICATION PUBLICATION
(19) INDIA
(22) Date of filing of Application :25/10/2013
(21) Application No.9199/DELNP/2013 A
(43) Publication Date : 19/12/2014

(54) Title of the invention : GUIDING CATHETER

(51) International classification :A61M25/00
(31) Priority Document No :11160351.0
(32) Priority Date :30/03/2011
(33) Name of priority country :EPO
(86) International Application No :PCT/EP2012/055507
Filing Date :28/03/2012
(87) International Publication No :WO 2012/130878
(61) Patent of Addition to Application Number :NA
Filing Date :NA
(62) Divisional to Application Number :NA
Filing Date :NA

(71)**Name of Applicant :**
1)DANGOISSE Vincent
Address of Applicant :Rue de Farciennes 8 B 6250 Aiseau Presles Belgium
(72)**Name of Inventor :**
1)DANGOISSE Vincent

(57) Abstract :
Guiding catheter comprising a first end (1) and a second end (2), and at least three main portions being : a first linear portion (3) connected to the first end (1), a second curved portion (4) connected to the first linear portion (3), a third linear portion (9), connected to the second curved portion (4), opposite to the first linear portion (3), and connected to said second end (2), characterized in that said second curved portion (4) subtends an angle from 195° to 240° and in that said third linear portion (9) is provided to engage an active distal tip (10) as fourth portion.

No. of Pages : 31 No. of Claims : 8

(12) PATENT APPLICATION PUBLICATION
(19) INDIA
(22) Date of filing of Application :23/10/2013
(21) Application No.9141/DELNP/2013 A
(43) Publication Date : 19/12/2014

(54) Title of the invention : NON INVASIVE ASSESSMENT OF LIVER FAT BY CRAWLING WAVE DISPERSION

(51) International classification :A61B8/00,A61B8/08
(31) Priority Document No :61/487025
(32) Priority Date :17/05/2011
(33) Name of priority country :U.S.A.
(86) International Application No :PCT/US2012/038281
Filing Date :17/05/2012
(87) International Publication No :WO 2012/158877
(61) Patent of Addition to Application Number :NA
Filing Date :NA
(62) Divisional to Application Number :NA
Filing Date :NA

(71)**Name of Applicant :**
1)UNIVERSITY OF ROCHESTER
Address of Applicant :601 Elmwood Avenue Box OTT Rochester NY 14642 U.S.A.
(72)**Name of Inventor :**
1)BARRY Christopher T.
2)RUBENS Deborah J.
3)PARKER Kevin J.

(57) Abstract :
Using a modified ultrasound device crawling waves are applied to the liver over a range of shear wave frequencies. Dispersion measurements are obtained that reflect tissue viscosity and these correlate with the degree of steatosis. A device for the process has an actuator on either side of the ultrasound transducer to apply shear waves which interfere to produce the crawling waves.

No. of Pages : 21 No. of Claims : 13

(12) PATENT APPLICATION PUBLICATION
(19) INDIA
(22) Date of filing of Application :23/10/2013
(21) Application No.9142/DELNP/2013 A
(43) Publication Date : 19/12/2014

(54) Title of the invention : DRY CELL START UP OF AN ELECTROLYTIC CELL FOR ALUMINUM PRODUCTION

(51) International classification :C25C3/06,C25C7/06
(31) Priority Document No :2741112
(32) Priority Date :25/05/2011
(33) Name of priority country :Canada
(86) International Application No :PCT/CA2012/000474
Filing Date :18/05/2012
(87) International Publication No :WO 2012/174641
(61) Patent of Addition to Application Number :NA
Filing Date :NA
(62) Divisional to Application Number :NA
Filing Date :NA

(71)**Name of Applicant :**
1)RIO TINTO ALCAN INTERNATIONAL LIMITED
Address of Applicant :1188 Sherbrooke Street West Montral Qubec H3A 3G2 Canada
(72)**Name of Inventor :**
1)CAYOUETTE Robert
2)LAPLANTE Fran§ois

(57) Abstract :
A method for starting up an electrolytic cell (20) for aluminum production having a cathode block (26) with an upper surface (32) the method comprising: disposing contact resistance material (46) over the upper surface (32) of the cathode block (26); lowering a plurality of anodes (28) to abut the contact resistance material (46); filling the electrolytic cell (20) and covering the anodes (28) with solid electrolyte material (72) comprising crushed electrolytic bath material cryolite or mixtures thereof; delivering electrical current to the anodes (28) to at least partially melt the solid electrolyte material (72) and raising the anodes (28) when a predetermined depth of molten electrolyte material has been reached.

No. of Pages : 26 No. of Claims : 15

(12) PATENT APPLICATION PUBLICATION
(19) INDIA
(22) Date of filing of Application :23/10/2013
(21) Application No.9143/DELNP/2013 A
(43) Publication Date : 19/12/2014

(54) Title of the invention : EXHAUST GAS PURIFICATION OXIDATION CATALYST

(51) International classification :B01J29/74,B01D53/94,F01N3/10
(31) Priority Document No :2011086219
(32) Priority Date :08/04/2011
(33) Name of priority country :Japan
(86) International Application No :PCT/JP2012/059546
Filing Date :06/04/2012
(87) International Publication No :WO 2012/137930
(61) Patent of Addition to Application Number :NA
Filing Date :NA
(62) Divisional to Application Number :NA
Filing Date :NA

(71)**Name of Applicant :**
1)TOYOTA JIDOSHA KABUSHIKI KAISHA
Address of Applicant :1 Toyota cho Toyota shi Aichi 4718571 Japan
(72)**Name of Inventor :**
1)TAKAGI Nobuyuki
2)SOBUE Yuichi
3)IKEDA Hanae
4)KAMADA Masaya
5)INDE Ryoichi

(57) Abstract :
The exhaust gas purification oxidation catalyst provided by the present invention is provided with a carrier which, supporting a noble metal which catalyzes oxidation of carbon monoxide (CO),is configured to have a main body comprising a composite metal oxide containing Al and Zr, or Al, Zr and Ti in the following mass proportions in terms of oxides: 40-99 mass% Al_2O_3, 1-45 mass% ZrO_2, and 0-15 mass% TiO_2.

No. of Pages : 52 No. of Claims : 11

(12) PATENT APPLICATION PUBLICATION
(19) INDIA
(22) Date of filing of Application :23/10/2013
(21) Application No.9144/DELNP/2013 A
(43) Publication Date : 19/12/2014

(54) Title of the invention : FILMS OF STARCH-POLYMER WAX OIL COMPOSITIONS

(51) International classification :C08K11/00
(31) Priority Document No :61/488580
(32) Priority Date :20/05/2011
(33) Name of priority country :U.S.A.
(86) International Application No :PCT/US2012/038539
Filing Date :18/05/2012
(87) International Publication No :WO 2012/162136
(61) Patent of Addition to Application Number :NA
Filing Date :NA
(62) Divisional to Application Number :NA
Filing Date :NA

(71)**Name of Applicant :**
1)THE PROCTER & GAMBLE COMPANY
Address of Applicant :One Procter & Gamble Plaza Cincinnati Ohio 45202 U.S.A.
(72)**Name of Inventor :**
1)ALLEN William Maxwell Jr.
2)BOND Eric Bryan
3)NODA Isao

(57) Abstract :
Films formed from compositions comprising thermoplastic starch thermoplastic polymers and oils waxes or combinations thereof are disclosed where the oil wax or combination is dispersed throughout the thermoplastic polymer. Also disclosed are articles formed from films of these compositions.

No. of Pages : 43 No. of Claims : 10

(12) PATENT APPLICATION PUBLICATION
(19) INDIA
(22) Date of filing of Application :25/10/2013
(21) Application No.9209/DELNP/2013 A
(43) Publication Date : 19/12/2014

(54) Title of the invention : DEVICE FOR MOULDING FIBROUS MATERIAL

(51) International classification :D04H1/60,D04H1/732
(31) Priority Document No :11166646.7
(32) Priority Date :19/05/2011
(33) Name of priority country :EPO
(86) International Application No :PCT/EP2012/058446
Filing Date :08/05/2012
(87) International Publication No :WO 2012/156234
(61) Patent of Addition to Application Number :NA
Filing Date :NA
(62) Divisional to Application Number :NA
Filing Date :NA

(71)**Name of Applicant :**
1)AUTONEUM MANAGEMENT AG
Address of Applicant :Schlosstalstrasse 43 CH 8406 Winterthur Switzerland
(72)**Name of Inventor :**
1)PEROZ Jacky

(57) Abstract :
Device for producing a 3 dimensional shaped consolidated product comprising a rotary drum defined as a rotary conveyor with a peripheral surface extending in circumferential direction with at least one product shaping area in the form of a cavity on said peripheral surface the peripheral surface is pervious to air at least in the product shaping area at least one material feed device to feed a base material into the at least one cavity a vacuum device designed to generate a negative pressure at least in the at least one cavity whereby the generated suction is directed towards the interior of the rotary conveyor and whereby downstream of the material feed device at least one consolidating device is located such that at least a part of the filled cavity is subjected to a consolidating treatment whereby the base material at least partly will adhere to neighbouring material.

No. of Pages : 18 No. of Claims : 8

(12) PATENT APPLICATION PUBLICATION
(19) INDIA
(22) Date of filing of Application :25/10/2013
(21) Application No.9212/DELNP/2013 A
(43) Publication Date : 19/12/2014

(54) Title of the invention : RUBBER COMPOSITION

(51) International classification :C08L9/00,C08K3/04,C08K3/36
(31) Priority Document No :2011102328
(32) Priority Date :28/04/2011
(33) Name of priority country :Japan
(86) International Application No :PCT/JP2012/061488
Filing Date :27/04/2012
(87) International Publication No :WO 2012/147974
(61) Patent of Addition to Application Number :NA
Filing Date :NA
(62) Divisional to Application Number :NA
Filing Date :NA

(71)**Name of Applicant :**
1)BRIDGESTONE CORPORATION
Address of Applicant :10 1 Kyobashi 1 chome Chuo ku Tokyo 1048340 Japan
(72)**Name of Inventor :**
1)HORIE Satoshi
2)IGARASHI Takaaki

(57) Abstract :
The present invention provides a rubber composition having improved low-neat -release pronerties and containing: a rubber component (A) comprising 90-100 mass% of at least one type of diene rubber synthesized by means of solution polymerization and 0-10 mass% of another diene rubber; silica (B) having an n-hexadecyltrimethylammonium bromide (CTAB) adsorption specific surface area measured in compliance with the method described in ASTM D3765-92 of at least 180 m2/g; a silane coupling agent that is a polysulfide compound and/or a thioester compound; and a vulcanization accelerator (D). The rubber composition is characterized by the average aggregate surface area (nm 2) of the silica in the rubber composition after vulcanization being no greater than 1700.

No. of Pages : 80 No. of Claims : 8

(12) PATENT APPLICATION PUBLICATION
(19) INDIA
(22) Date of filing of Application :24/10/2013
(21) Application No.9184/DELNP/2013 A
(43) Publication Date : 19/12/2014

(54) Title of the invention : AN INDUCTOR CORE AN ARRANGEMENT FOR A PRESS AND A MANUFACTURING METHOD

(51) International classification :H01F17/04
(31) Priority Document No :11164949.7
(32) Priority Date :05/05/2011
(33) Name of priority country :EPO
(86) International Application No :PCT/EP2012/057981
Filing Date :02/05/2012
(87) International Publication No :WO 2012/150236
(61) Patent of Addition to Application Number :NA
Filing Date :NA
(62) Divisional to Application Number :NA
Filing Date :NA

(71)**Name of Applicant :**
1)H–GAN„S AB (PUBL)
Address of Applicant :Bruksgatan 35 S 26383 Hgans Sweden
(72)**Name of Inventor :**
1)ANDERSSON Ola
2)LARSSON Mats
3)RAUCH Peter

(57) Abstract :
According to the present inventive concept there is provided an inductor core made of a compressed soft magnetic powder material. The inductor core comprises: a base core portion having a first surface and an opposite second surface; an inner core portion extending from the first surface in a direction transverse to the first surface; an outer core portion extending, in the direction transverse to the first surface, from the first surface to an end surface of the outer core portion, the outer core portion at least partly surrounding the inner core portion, thereby forming a space around the inner core portion for accommodating a winding; wherein the first surface comprises a recess for accommodating a connection portion of the winding, said recess extending at least a part of a distance between the inner core portion and the outer core portion, and wherein the outer core portion presents a slit extending from said end surface towards the recess, and wherein the second surface comprises a first protrusion oppositely arranged to the recess. There is also provided an arrangement for a press and a manufacturing method.

No. of Pages : 34 No. of Claims : 15

(12) PATENT APPLICATION PUBLICATION
(19) INDIA
(22) Date of filing of Application :24/10/2013
(21) Application No.9185/DELNP/2013 A
(43) Publication Date : 19/12/2014

(54) Title of the invention : STABILISED POLYAMIDE

(51) International classification :C08G69/26,C08G69/36,C08K5/00
(31) Priority Document No :11/01125
(32) Priority Date :13/04/2011
(33) Name of priority country :France
(86) International Application No :PCT/EP2012/056604
Filing Date :12/04/2012
(87) International Publication No :WO 2012/140100
(61) Patent of Addition to Application Number :NA
Filing Date :NA
(62) Divisional to Application Number :NA
Filing Date :NA

(71)**Name of Applicant :**
1)RHODIA OPERATIONS
Address of Applicant :40 rue de la Haie Coq F 93306 Aubervilliers France
(72)**Name of Inventor :**
1)JEOL Stphane
2)BADEL Thierry

(57) Abstract :
The invention relates to the use of a polyhydric alcohol during a polyamide polymerisation method in order to increase the stability of the resulting modified polyamide in relation to heat light and/or adverse weather conditions. The invention also relates to a polyamide modified in this manner and to polyamide compositions that can be used to produce specific articles that are likely to be subjected to high temperatures.

No. of Pages : 30 No. of Claims : 17

(12) PATENT APPLICATION PUBLICATION
(19) INDIA
(22) Date of filing of Application :24/10/2013
(21) Application No.9186/DELNP/2013 A
(43) Publication Date : 19/12/2014

(54) Title of the invention : METHOD OF MEASURING SCATTERING OF X RAYS ITS APPLICATIONS AND IMPLEMENTATION DEVICE

(51) International classification :G01N23/20,G01N23/207
(31) Priority Document No :11 53007
(32) Priority Date :06/04/2011
(33) Name of priority country :France
(86) International Application No :PCT/FR2012/050707
Filing Date :02/04/2012
(87) International Publication No :WO 2012/136921
(61) Patent of Addition to Application Number :NA
Filing Date :NA
(62) Divisional to Application Number :NA
Filing Date :NA

(71)**Name of Applicant :**
1)UNIVERSITE DE ROUEN
Address of Applicant :1 rue Thomas Becket F 76130 Mont saint aignan France
(72)**Name of Inventor :**
1)COQUEREL Grard
2)SANSELME Morgane
3)LAFONTAINE Ana¯s

(57) Abstract :
Method of measuring scattering of X-rays, characterized in that a compound to be analyzed is installed in a rceptacle (1) comprising a lat bottom per mable to X-rays, in that an analysis by scattering of the X-rays is carried out by sending a stream of X-rays upwards in the direction of said bottom permable to the Xrays and by measuring the stream of scattered X-rays that is reflected downwards, and in that a thermostatically controlled fluid at the same temprature as that of the com pound to be analyzed in the rceptacle is projected towards the flat bottom (3) per mable to X-rays, from outside the rceptacle (1), and device for measuring scattering of X-rays characterized in that it comprises a rceptacle (1) comprising a bottom shut off by a membrane (3) transparent to X-rays, as well as a diffractometer whose gonio - meter (4, 5) is installed so as to direct a beam of X-rays from below towards the mem brane (3) transparent to X-rays and the dtecter (5) being installed for the measurement of the X-rays scattered therebelow.

No. of Pages : 35 No. of Claims : 17

(12) PATENT APPLICATION PUBLICATION
(19) INDIA
(22) Date of filing of Application :25/10/2013
(21) Application No.9187/DELNP/2013 A
(43) Publication Date : 19/12/2014

(54) Title of the invention : TOWER BOILER WITH SEPARATED FLUES AND ADJUSTABLE FLOW

(51) International classification :F22B37/40,F22G5/04
(31) Priority Document No :201110085966.6
(32) Priority Date :07/04/2011
(33) Name of priority country :China
(86) International Application No :PCT/CN2011/001362
Filing Date :16/08/2011
(87) International Publication No :WO 2012/135987
(61) Patent of Addition to Application Number :NA
Filing Date :NA
(62) Divisional to Application Number :NA
Filing Date :NA

(71)**Name of Applicant :**
1)SHANGHAI BOILER WORKS LTD
Address of Applicant :250 Huaning Road Minhang Shanghai 200245 China
(72)**Name of Inventor :**
1)YAO Danhua
2)ZHU Yufeng

(57) Abstract :
Disclosed is a tower boiler with separated flues and adjustable flow. A plurality of flue separation screens is arranged between two opposite side furnace walls of a boiler body, which correspondingly divides the inside of the boiler body into a plurality of flue gas channels, and a superheater and a reheater of the boiler are respectively arranged in different flue gas channels . In the process that high-temperature flue gas generated by burning is discharged via the different flue gas channels, steam conveyed in the superheater or reheater arranged in each flue gas channel is heated so as to carry out corresponding superheating or reheating. The flue gas channels are each provided with a regulating baffle, and the flow of the high-temperature flue gas in each flue gas channel is correspondingly regulated, so as to respectively regulate the temperature of the superheated steam output by the superheater and the temperature of the reheated steam output by the reheater. Therefore, the present invention can respectively regulate the heat receiving amount levels of the superheater and the reheater, and the left/right or fixmt/back heat receiving amount levels in the boiler body, and has good control performance.

No. of Pages : 18 No. of Claims : 7

(12) PATENT APPLICATION PUBLICATION
(19) INDIA
(22) Date of filing of Application :24/10/2013
(21) Application No.9179/DELNP/2013 A
(43) Publication Date : 19/12/2014

(54) Title of the invention : ASSESSMENT OF ROTOR BLADES

(51) International classification :G01N21/88,G01N21/95,F03D11/00
(31) Priority Document No :10 2011 075 675.2
(32) Priority Date :11/05/2011
(33) Name of priority country:Germany
(86) International Application No :PCT/EP2012/057188
Filing Date :19/04/2012
(87) International Publication No :WO 2012/152561
(61) Patent of Addition to Application Number :NA
Filing Date :NA
(62) Divisional to Application Number :NA
Filing Date :NA

(71)**Name of Applicant :**
1)WOBBEN PROPERTIES GMBH
Address of Applicant :Dreekamp 5 26605 Aurich Germany
(72)**Name of Inventor :**
1)JANSEN Gerhard

(57) Abstract :
The invention relates to a method for optically assessing a wind power plant (1) or a pari thereof, in particular a rotor blade (6), comprising the following Steps: directing a camera (32) towards a region to be assessed, taking a photo of the region to be assessed by means of the camera (32), detecting the position of the photographed region, and associating the determined position with the photographed region, for example such that a position detection device is designed as a projection device having a projection surface and comprises a luminous means, for example a laser pointer, which is connected to the camera (32).

No. of Pages : 26 No. of Claims : 16

(12) PATENT APPLICATION PUBLICATION
(19) INDIA
(22) Date of filing of Application :24/10/2013
(21) Application No.9180/DELNP/2013 A
(43) Publication Date : 19/12/2014

(54) Title of the invention : MANAGING DATA FOR AUTHENTICATION DEVICES

(51) International classification :H04W88/02,G06F21/00,H02J7/00
(31) Priority Document No :NA
(32) Priority Date :NA
(33) Name of priority country :NA
(86) International Application No :PCT/CA2011/050278
Filing Date :06/05/2011
(87) International Publication No :WO 2012/151652
(61) Patent of Addition to Application Number :NA
Filing Date :NA
(62) Divisional to Application Number :NA
Filing Date :NA

(71)**Name of Applicant :**
1)CERTICOM CORP.
Address of Applicant :4701 Tahoe Blvd Tahoe A 6th Floor Mississauga Ontario L4W 0B5 Canada
(72)**Name of Inventor :**
1)LAMBERT Robert John

(57) Abstract :
Methods, systems, and computer programs for managing authentication data for an authentication device are disclosed. An authentication device may be included, for example, in a mobile device battery so that the battery can be authenticated by a mobile device. In some implementations, encrypted certificate data are stored on an authentication device. The encrypted certificate data are accessed, and unencrypted certificate data are generated by decrypting the encrypted certificate data. The unencrypted certificate data are stored on the authentication device. The unencrypted certificate data enable the authentication device to provide a valid reply message, for example, in response to receiving an interrogation message from an interrogation device. In some implementations, the reply message includes the unencrypted certificate data and a response value generated by the authentication device based on a secret value.

No. of Pages : 46 No. of Claims : 30

(12) PATENT APPLICATION PUBLICATION
(19) INDIA
(22) Date of filing of Application :24/10/2013
(21) Application No.9181/DELNP/2013 A
(43) Publication Date : 19/12/2014

(54) Title of the invention : SMALL BROADBAND LOOP ANTENNA FOR NEAR FIELD APPLICATIONS

(51) International classification :H01Q7/00,H01Q21/30,H01Q1/22
(31) Priority Document No :61/475109
(32) Priority Date :13/04/2011
(33) Name of priority country :U.S.A.
(86) International Application No :PCT/US2012/000197
Filing Date :06/04/2012
(87) International Publication No :WO 2012/141767
(61) Patent of Addition to Application Number :NA
Filing Date :NA
(62) Divisional to Application Number :NA
Filing Date :NA

(71)**Name of Applicant :**
1)TYCO FIRE & SECURITY GMBH
Address of Applicant :Victor von Bruns Strasse 21 8212 Neuhausen am Rheinfall Switzerland
(72)**Name of Inventor :**
1)JIANG Bing
2)CAMPERO Richard John

(57) Abstract :
A method and apparatus for providing a broadband near field of an antenna are disclosed. A small broadband loop antenna may include a printed circuit board (PCB) substrate with multiple layers. Printed on the PCB substrate are dual loops sharing a same driver circuit an impedance matching network a primary ground layer and a conductive layer. A shorting via connects the dual loops to a ground plane. The antenna may be tuned to a desired operating frequency by adjusting parameters of the loop such as the position of the shorting via.

No. of Pages : 27 No. of Claims : 20

(12) PATENT APPLICATION PUBLICATION
(19) INDIA
(22) Date of filing of Application :24/10/2013
(21) Application No.9182/DELNP/2013 A
(43) Publication Date : 19/12/2014

(54) Title of the invention : SURFACE TREATMENT METHOD FOR METAL MATERIAL AND MOLD TREATED BY SURFACE TREATMENT METHOD

(51) International classification :B22C3/00,B22C9/12,B22D17/20
(31) Priority Document No :2011101602
(32) Priority Date :28/04/2011
(33) Name of priority country :Japan
(86) International Application No :PCT/IB2012/000845
Filing Date :12/04/2012
(87) International Publication No :WO 2012/146977
(61) Patent of Addition to Application Number :NA
Filing Date :NA
(62) Divisional to Application Number :NA
Filing Date :NA

(71)**Name of Applicant :**
1)TOYOTA JIDOSHA KABUSHIKI KAISHA
Address of Applicant :1 Toyota cho Toyota shi Aichi ken 471 8571 Japan
2)TOYOTA SCHOOL FOUNDATION
3)MEC INTERNATIONAL CO. LTD.
(72)**Name of Inventor :**
1)FURUKAWA Yuichi
2)OKUMIYA Masahiro
3)TSUNEKAWA Yoshiki
4)KUMEMOTO Nao
5)KAWAHARA Fumio
6)TAKAMI Katsuhiro

(57) Abstract :
A surface treatment method for a metal material is provided which includes applying diluted sulfuric acid to a surface of the metal material that is composed primarily of iron, performing a heat treatment on the metal material in the presence of at least one of CO, C02 and organic gas under nitriding conditions under which a nitrided layer is formed in a superficial layer of the metal material after the application of the diluted sulfuric acid to form a carbon film which includes at least one of carbon nanocoils, car - bon nanotubes and carbon nanofilaments on a surface of the nitrided layer of the metal material.

No. of Pages : 34 No. of Claims : 10

(12) PATENT APPLICATION PUBLICATION
(19) INDIA
(22) Date of filing of Application :25/10/2013
(21) Application No.9222/DELNP/2013 A
(43) Publication Date : 19/12/2014

(54) Title of the invention : DRYER IRON SINGLE BODY MACHINE

(51) International classification :D06F58/10
(31) Priority Document No :201110082754.2
(32) Priority Date :28/03/2011
(33) Name of priority country :China
(86) International Application No :PCT/CN2011/002011
Filing Date :01/12/2011
(87) International Publication No :WO 2012/129750
(61) Patent of Addition to Application Number :NA
Filing Date :NA
(62) Divisional to Application Number :NA
Filing Date :NA

(71)**Name of Applicant :**
1)HU Jiebo
Address of Applicant :80 East Wutangjiang Road Yanglong Xinpu Cixi Zhejiang 315322 China
(72)**Name of Inventor :**
1)HU Jiebo

(57) Abstract :
A dryer-iron smgle-body machine compris ing a support (1), and arranged on the support (1) a column (4), a drying unit (2), and an ironing unit (3). The drying unit (2) comprises a drying rack part (21), and supported on the drying rack part (21) a hood (22) and a heating part (23). A venting port (232) of the heating part (23) i s in a sealed communication with an air-inlet (225) of the hood (22). The drying unit (2) forms a clothes drying region on one side of the column (4). The ironing unit (3) comprises an ironing apparatus and a clothes hanger (33 1). The ironing unit (3) forms an ironing region on the other side of the column (4). The dryer-iron single-body machine allows for drying and ironing of clothes to be performed simultaneously without interference between the two, thus improving the capability of the machine in handling dry and wet clothes, increasing convenience of use, reducing operational difficulty during use, preventing energy wastage, allowing for a reduced foot print, and being particularly applicable in widespread use by families in houses having limited space.

No. of Pages : 66 No. of Claims : 25

(12) PATENT APPLICATION PUBLICATION
(19) INDIA
(22) Date of filing of Application :19/09/2013
(21) Application No.8208/DELNP/2013 A
(43) Publication Date : 19/12/2014

(54) Title of the invention : METHOD AND SYSTEM FOR DYNAMIC PLATFORM SECURITY IN A DEVICE OPERATING SYSTEM

(51) International classification :G06F21/00
(31) Priority Document No :NA
(32) Priority Date :NA
(33) Name of priority country :NA
(86) International Application No :PCT/CA2011/050135
Filing Date :09/03/2011
(87) International Publication No :WO 2012/119218
(61) Patent of Addition to Application Number :NA
Filing Date :NA
(62) Divisional to Application Number :NA
Filing Date :NA

(71)**Name of Applicant :**
1)IRDETO B.V.
Address of Applicant :Taurus Avenue 105 NL 2132 LS Hoofddorp Netherlands
(72)**Name of Inventor :**
1)LITVA Paul
2)JONES David
3)VANDERGEEST Ron

(57) Abstract :
A system and method is provided for implementing platform security on a consumer electronic device having an open development platform. The device is of the type which includes an abstraction layer operable between device hardware and application software. A secure software agent is provided for embedding within the abstraction layer forming the operating system. A secure store is provided for storing security information unique to one or more instances of the application software. The secure software agent uses the security information for continuous runtime assurance of ongoing operational integrity of the operating system and application software and thus operational integrity of the device.

No. of Pages : 44 No. of Claims : 53

(12) PATENT APPLICATION PUBLICATION
(19) INDIA
(22) Date of filing of Application :25/10/2013
(21) Application No.9227/DELNP/2013 A
(43) Publication Date : 19/12/2014

(54) Title of the invention : A METHOD FOR MANUFACTURING PEGYLATED OLIGONUCLEOTIDES

(51) International classification	:A61K48/00,A61K47/48,A61K47/30
(31) Priority Document No	:61/479226
(32) Priority Date	:26/04/2011
(33) Name of priority country	:U.S.A.
(86) International Application No	:PCT/US2012/035270
Filing Date	:26/04/2012
(87) International Publication No	:WO 2012/149198
(61) Patent of Addition to Application Number	:NA
Filing Date	:NA
(62) Divisional to Application Number	:NA
Filing Date	:NA

(71)**Name of Applicant :**
1)REGADO BIOSCIENCES INC.
Address of Applicant :120 Mountain View Road Boulevard Basking Ridge NJ 07920 U.S.A.
(72)**Name of Inventor :**
1)BROOKS Douglas
2)RUSCONI Christopher P.

(57) Abstract :
A method for preparing a therapeutic pegylated oligonucleotide is described. The method involves synthesis cleavage and purification steps designed to improve the efficiency whereby the therapeutic oligonucleotide may be prepared. Also described are methods for large scale preparation at the improved efficiency.

No. of Pages : 53 No. of Claims : 11

(12) PATENT APPLICATION PUBLICATION
(19) INDIA
(22) Date of filing of Application :25/10/2013
(21) Application No.9228/DELNP/2013 A
(43) Publication Date : 19/12/2014

(54) Title of the invention : BATTERY SYSTEM AND METHOD FOR PROVIDING AN INTERMEDIATE VOLTAGE

(51) International classification :H01M10/48,H01M10/42,H02J7/00
(31) Priority Document No :10 2011 077 708.3
(32) Priority Date :17/06/2011
(33) Name of priority country :Germany
(86) International Application No :PCT/EP2012/057374
Filing Date :23/04/2012
(87) International Publication No :WO 2012/171686
(61) Patent of Addition to Application Number :NA
Filing Date :NA
(62) Divisional to Application Number :NA
Filing Date :NA

(71)**Name of Applicant :**
1)ROBERT BOSCH GMBH
Address of Applicant :Postfach 30 02 20 70442 Stuttgart Germany
(72)**Name of Inventor :**
1)TIEFENBACH Andy

(57) Abstract :
The invention relates to a battery system (10) comprising a battery module (11) which comprises a first high voltage connection (12a) a second high voltage connection (12b) and a multiplicity of battery cell modules (11a ... 11n) which are connected in series between the first and second high voltage connections and a switching matrix (13). The switching matrix comprises a large number of switching rails (14) which are each connected to one of the nodes between in each case two of the battery cell modules which are connected in series a multiplicity of first switching devices (15a) which are designed to connect in each case one of the switching rails (14) to a first low voltage connection (13a) of the switching matrix (13) and a multiplicity of second switching devices (15b) which are designed to connect in each case one of the switching rails (14) to a second low voltage connection (13b) of the switching matrix. In this case a first total voltage (HV) of all of the battery cell modules (11a ... 11n) which are connected in series is present between the first high voltage connection (12a) and the second high voltage connection (12b) and a second total voltage (LV) of some of the battery cell modules (11a ... 11n) which are connected in series is present between the first low voltage connection (13a) and the second low voltage connection (13b) depending on the switching state of the first switching devices (15a) and the second switching devices (15b).

No. of Pages : 15 No. of Claims : 10

(12) PATENT APPLICATION PUBLICATION
(19) INDIA
(22) Date of filing of Application :25/10/2013
(21) Application No.9229/DELNP/2013 A
(43) Publication Date : 19/12/2014

(54) Title of the invention : INJECTOR IN PARTICULAR FUEL INJECTOR FOR AN INTERNAL COMBUSTION ENGINE

(51) International classification :F02M47/02,F02M61/16
(31) Priority Document No :10 2011 077 618.4
(32) Priority Date :16/06/2011
(33) Name of priority country :Germany
(86) International Application No :PCT/EP2012/059614
Filing Date :23/05/2012
(87) International Publication No :WO 2012/171767
(61) Patent of Addition to Application Number :NA
Filing Date :NA
(62) Divisional to Application Number :NA
Filing Date :NA

(71)**Name of Applicant :**
1)ROBERT BOSCH GMBH
Address of Applicant :Postfach 30 02 20 70442 Stuttgart Germany
(72)**Name of Inventor :**
1)BENTELE Peter

(57) Abstract :
The invention relates to an injector, in particular a fuel injector for an internal combustion engine, having an actuator module (8) controlling a valve (15) for adjusting a flow rate of a fluid medium, wherein the valve (15) links a control chamber (14) for controlling a control piston to a low pressure area. According to the invention an injector is provided which is improved with regard to the process for the manufacture thereof. This is achieved in that the control chamber (4) is connected to a storage volume, wherein the length of the volume chamber is the same for different injectors, irrespective of the injector.

No. of Pages : 11 No. of Claims : 8

(12) PATENT APPLICATION PUBLICATION
(19) INDIA
(22) Date of filing of Application :25/10/2013
(21) Application No.9188/DELNP/2013 A
(43) Publication Date : 19/12/2014

(54) Title of the invention : A WINDSCREEN WIPER DEVICE

(51) International classification :B60S1/38
(31) Priority Document No :NA
(32) Priority Date :NA
(33) Name of priority country :NA
(86) International Application No :PCT/EP2011/055413
Filing Date :07/04/2011
(87) International Publication No :WO 2012/136257
(61) Patent of Addition to Application Number :NA
Filing Date :NA
(62) Divisional to Application Number :NA
Filing Date :NA

(71)**Name of Applicant :**
1)FEDERAL MOGUL S.A.
Address of Applicant :Avenue Champion B 6790 Aubange Belgium
(72)**Name of Inventor :**
1)BOLAND Xavier

(57) Abstract :
A windscreen wiper device, particularly for automobiles, comprising an elastic, elongated carrier element, as well as an elongated wiper blade (7) of a flexible material, which can be placed in abutment with a windscreen to be wiped, which wiper blade (7) is of the flat blade type and includes at least one groove (19), in which groove (19) a longitudinal strip (20) of the carrier element is disposed, and wherein said windscreen wiper device comprises a connecting device (1) for detachably connecting said wiper blade (7) to an oscillating arm near one end thereof around a pivot axis, wherein said connecting device (1) is fixated to said flexible material of said wiper blade (7) by deformation of said connecting device (1) in order to block any lateral movement between said longitudinal strip (20) and said wiper blade (7) at the location of their interconnection and between said connecting device (1) and said wiper blade (7) at the location of their interconnection.

No. of Pages : 21 No. of Claims : 11

(12) PATENT APPLICATION PUBLICATION
(19) INDIA
(22) Date of filing of Application :25/10/2013
(21) Application No.9231/DELNP/2013 A
(43) Publication Date : 19/12/2014

(54) Title of the invention : AUTO TENSIONER

(51) International classification :F16H7/12
(31) Priority Document No :2011100826
(32) Priority Date :28/04/2011
(33) Name of priority country :Japan
(86) International Application No :PCT/JP2012/061467
Filing Date :27/04/2012
(87) International Publication No :WO 2012/147957
(61) Patent of Addition to Application Number :NA
Filing Date :NA
(62) Divisional to Application Number :NA
Filing Date :NA

(71)**Name of Applicant :**
1)Mitsuboshi Belting Ltd.
Address of Applicant :1 21 Hamazoe dori 4 chome Nagata ku Kobe shi Hyogo 6530024 Japan
(72)**Name of Inventor :**
1)YONEDA Tetsuo
2)IMAI Katsuya

(57) Abstract :
The present invention pertains to an auto tensioner equipped with: a stationary member having a first tube part; a rotating member having a second tube part at least a portion of which is arranged overlapping the first tube part in the radial direction; and a water discharge mechanism provided at the interface between the first tube part and the second tube part. The water discharge mechanism has: a water inlet that is formed by a gap between the outer circumferential surface of the first tube part and the outer circumferential surface of the second tube part and that is open in the circumferential direction; a water passage that is formed by a gap between one of the aforementioned tube parts and a water retaining groove formed in the circumferential direction on the outer circumferential surface of the other of the aforementioned tube parts and that communicates with the water inlet; and at least one water discharge port formed in the outside peripheral wall of the water passage in the radial direction.

No. of Pages : 28 No. of Claims : 5

(12) PATENT APPLICATION PUBLICATION
(19) INDIA
(22) Date of filing of Application :25/10/2013
(21) Application No.9232/DELNP/2013 A
(43) Publication Date : 19/12/2014

(54) Title of the invention : VORTEX CHAMBER BODY FOR METAL MELTING FURNACE AND METAL MELTING FURNACE USING SAID VORTEX CHAMBER BODY

(51) International classification :F27B3/04,B22D1/00,F27D27/00
(31) Priority Document No :2011217851
(32) Priority Date :30/09/2011
(33) Name of priority country :Japan
(86) International Application No :PCT/JP2012/074913
Filing Date :27/09/2012
(87) International Publication No :WO 2013/047668
(61) Patent of Addition to Application Number :NA
Filing Date :NA
(62) Divisional to Application Number :NA
Filing Date :NA

(71)**Name of Applicant :**
1)TAKAHASHI Kenzo
Address of Applicant :149 Rokkodai 9 chome Matsudo shi Chiba 2702203 Japan
(72)**Name of Inventor :**
1)TAKAHASHI Kenzo

(57) Abstract :
To be able to prevent accidents easily perform maintenance and simplify the configuration. [Solution] The present invention is provided with: a furnace main body having a storage space for storing a melt; a vortex chamber body having a vortex chamber capable of connecting to the storage space of the furnace main body; and a weir part for connecting/disconnecting the storage space and the vortex chamber. The weir part is provided with a blind weir part and an opened weir part which are independent from one another. At least the blind weir part is configured so as to be able to move upward and downward relative to the vortex chamber body and the connection/disconnection is performed by switching between the upward movement position and the downward movement position. The opened weir part has a notch for connecting the vortex chamber and the storage space in the connected state.

No. of Pages : 23 No. of Claims : 15

(12) PATENT APPLICATION PUBLICATION
(19) INDIA
(22) Date of filing of Application :25/10/2013
(21) Application No.9233/DELNP/2013 A
(43) Publication Date : 19/12/2014

(54) Title of the invention : MULTI FUNCTIONAL PAIR OF CRUSHING PLATES HAVING SELF TOOTH TRIMMING CAPABILITY

(51) International classification :B02C1/10
(31) Priority Document No :201120084316.5
(32) Priority Date :28/03/2011
(33) Name of priority country :China
(86) International Application No :PCT/CN2012/073071
Filing Date :26/03/2012
(87) International Publication No :WO 2012/130127
(61) Patent of Addition to Application Number :NA
Filing Date :NA
(62) Divisional to Application Number :NA
Filing Date :NA

(71)**Name of Applicant :**
1)ZHEJIANG BLACK AND WHITE MINING MACHINERY CO. LTD
Address of Applicant :No 36 Sitong West Rd. Shangxi town Yiwu Zhejiang 321082 China
(72)**Name of Inventor :**
1)ZHU Xingliang

(57) Abstract :
Disclosed is a multi functional pair of crushing plates having self tooth trimming ability. The pair of crushing plates comprises a fixed jaw plate and a movable jaw plate and each of the fixed jaw plate and the movable jaw plate has a base plate and the base plates have teeth and grooves thereon wherein the teeth and grooves of the fixed jaw plate and movable jaw of the pair of crushing plates are arranged in a staggered pattern; and a number of holes penetrating the base plate are set up in the grooves and these holes are arranged in a row along the length of the teeth relative to the opposite base plate. The pair of crushing plates has overcome defects of prior jaw crushers such as poor crushing capability and low productivity after teeth of the jaw plates are worn out. The pair of crushing plates is simple in structure low in cost strong in crushing capability and high in productivity.

No. of Pages : 16 No. of Claims : 6

(12) PATENT APPLICATION PUBLICATION
(19) INDIA
(22) Date of filing of Application :25/10/2013
(21) Application No.9213/DELNP/2013 A
(43) Publication Date : 19/12/2014

(54) Title of the invention : ORAL SOLID PREPARATION OF COMPOUND ANTITUBERCULOSIS DRUG AND PREPARATION METHOD THEREOF

(51) International classification :A61K9/20,A61K31/496,A61K31/4409
(31) Priority Document No :201110091596.7
(32) Priority Date :12/04/2011
(33) Name of priority country :China
(86) International Application No :PCT/CN2012/073689
Filing Date :10/04/2012
(87) International Publication No :WO 2012/139485
(61) Patent of Addition to Application Number :NA
Filing Date :NA
(62) Divisional to Application Number :NA
Filing Date :NA

(71)**Name of Applicant :**
1)ZHEJIANG HISUN PHARMACEUTICAL CO. LTD.
Address of Applicant :46 Waisha Road Jiaojiang District Taizhou Zhejiang 318000 China
(72)**Name of Inventor :**
1)GU Maojian
2)ZHENG Qilan
3)XU Chao
4)LI Ning
5)CHEN Guixian
6)ZHENG Lan
7)WANG Min
8)JIANG Lintao

(57) Abstract :
Provided is an oral solid preparation of a compound anti-tubercular drug, wherein the active ingredients are rifampicin, isoniazid, pyrazinamide and ethambutol hydrochloride. The compound oral solid preparation is a coated tablet with coated core or a coated three-layer tablet, wherein the two active ingredients rifampicin and isoniazid do not contact directly. The compound oral solid preparation not only improves the stability of the compound preparation, but also improves the bioavailability of rifampicin.

No. of Pages : 52 No. of Claims : 23

(12) PATENT APPLICATION PUBLICATION
(19) INDIA
(22) Date of filing of Application :25/10/2013
(21) Application No.9214/DELNP/2013 A
(43) Publication Date : 19/12/2014

(54) Title of the invention : RUBBER COMPOSITION

(51) International classification :C08L9/00,C08K3/04,C08K3/36
(31) Priority Document No :2011102331
(32) Priority Date :28/04/2011
(33) Name of priority country :Japan
(86) International Application No :PCT/JP2012/061489
Filing Date :27/04/2012
(87) International Publication No :WO 2012/147975
(61) Patent of Addition to Application Number :NA
Filing Date :NA
(62) Divisional to Application Number :NA
Filing Date :NA

(71)**Name of Applicant :**
1)BRIDGESTONE CORPORATION
Address of Applicant :10 1 Kyobashi 1 chome Chuo ku Tokyo 1048340 Japan
(72)**Name of Inventor :**
1)HORIE Satoshi
2)IGARASHI Takaaki

(57) Abstract :
The present invention provides a rubber composition having improved low-heat -release characteristics and containing: a rubber component (A) comprising at least 10 mass% of natural ruober and/or a diene rubber synthesized by means of emulsion polymerization and no greater than 90 mass% of another diene rubber; silica (B) having an n-hexadecyltrimethylammonium bromide (CTAB) adsorption specific surface area measured in compliance with the method described in ASTM D3765-92 of less than 140 m2/g; a silane coupling agent (C) that is a polysulfide compound and/or a thioester compound; and a vulcanization accelerator (D). The rubber composition is characterized by the average aggregate surface area (nm 2) of the silica in the rubber composition after vulcanization being no greater than 3300.

No. of Pages : 103 No. of Claims : 7

(12) PATENT APPLICATION PUBLICATION
(19) INDIA
(22) Date of filing of Application :25/10/2013
(21) Application No.9215/DELNP/2013 A
(43) Publication Date : 19/12/2014

(54) Title of the invention : RUBBER COMPOSITION

(51) International classification :C08L9/00,C08K3/04,C08K3/36
(31) Priority Document No :2011102335
(32) Priority Date :28/04/2011
(33) Name of priority country :Japan
(86) International Application No :PCT/JP2012/061491
Filing Date :27/04/2012
(87) International Publication No :WO 2012/147977
(61) Patent of Addition to Application Number :NA
Filing Date :NA
(62) Divisional to Application Number :NA
Filing Date :NA

(71)**Name of Applicant :**
1)BRIDGESTONE CORPORATION
Address of Applicant :10 1 Kyobashi 1 chome Chuo ku Tokyo 1048340 Japan
(72)**Name of Inventor :**
1)HORIE Satoshi
2)IGARASHI Takaaki

(57) Abstract :
The present invention provides a rubber composition having improved low-heat -release characteristics and contain ing: a rubber component (A) comprising at least 10 mass% of natural ruober and/or a diene rubber synthesized by means of emulsion polymerization and no greater than 90 mass% of another diene rubber; silica (B) having an n-hexadecyltrimethylammonium bromide (CTAB) adsorption specific surface area measured in compliance with the method described in ASTM D 37 65 - 92 of at least 180 m2/g; a silane coupling agent (C) that is a polysulfide compound and/or a thioester compound; and a vulcanization accelerator (D). The rubber composition is characterized by the average aggregate surface area (nm 2) of the silica in the rubber composition after vulcanization being no greater than 1900.

No. of Pages : 102 No. of Claims : 7

(12) PATENT APPLICATION PUBLICATION
(19) INDIA
(22) Date of filing of Application :25/10/2013
(21) Application No.9216/DELNP/2013 A
(43) Publication Date : 19/12/2014

(54) Title of the invention : N SUBSTITUTED MANNOSAMINE DERIVATIVES PROCESS FOR THEIR PREPARATION AND THEIR USE

(51) International classification :C07H5/06,C07H15/18
(31) Priority Document No :1106095.1
(32) Priority Date :11/04/2011
(33) Name of priority country :U.K.
(86) International Application No :PCT/IB2012/051759
Filing Date :11/04/2012
(87) International Publication No :WO 2012/140576
(61) Patent of Addition to Application Number :NA
Filing Date :NA
(62) Divisional to Application Number :NA
Filing Date :NA

(71)**Name of Applicant :**
1)GLYCOM A/S
Address of Applicant :Diplomvej 373 2800 Kgs. Lyngby Denmark
(72)**Name of Inventor :**
1)VRASIDAS Ioannis
2)DEKANY Gyula
3)J NOSI gnes
4)HEDEROS Markus
5)R–HRIG Christoph

(57) Abstract :
A compound of the formula (I) wherein Ri is a group removable by hydrogenolysis,and wherein R2 is OH or R2 is -NHR wherein R is a group removable by hydro geno lysis. The compound can be made from fructose by a Heyns -rearrangement. The compound can be used then to make - free D-mannosamine or its salts, - D-mannosamine building blocks and mannosamine containing oligo- or polysaccharides, - N-acetyl-D-mannosamine and its hydrates and solvates, - neuraminic acid derivatives and, - viral neuraminidase inhibitors.

No. of Pages : 47 No. of Claims : 25

(12) PATENT APPLICATION PUBLICATION
(19) INDIA
(22) Date of filing of Application :25/10/2013
(21) Application No.9217/DELNP/2013 A
(43) Publication Date : 19/12/2014

(54) Title of the invention : MULTIPURPOSE SANITARY DISPOSAL GLOVE

(51) International classification :A41D19/015,A41D19/02
(31) Priority Document No :61/478308
(32) Priority Date :22/04/2011
(33) Name of priority country :U.S.A.
(86) International Application No :PCT/US2012/034320
Filing Date :19/04/2012
(87) International Publication No :WO 2012/145559
(61) Patent of Addition to Application Number :NA
Filing Date :NA
(62) Divisional to Application Number :NA
Filing Date :NA

(71)**Name of Applicant :**
1)SAVILLE Tara J.
Address of Applicant :76 6260 Kupuna Street Kailua Kona HI 96740 U.S.A.
2)SALE Mark D.
3)PAULSON Jay B.
(72)**Name of Inventor :**
1)SAVILLE Tara J.
2)SALE Mark D.
3)PAULSON Jay B.

(57) Abstract :
A glove having a panel having a cuff portion and a hand portion a seal located on the panel the seal having both male and female portions integrated into a single extrusion adhered to the inside surface of the first panel the seal arranged between the cuff portion and the hand portion nearer to the cuff portion and a perforated access to the first seal.

No. of Pages : 23 No. of Claims : 19

(12) PATENT APPLICATION PUBLICATION
(19) INDIA
(22) Date of filing of Application :22/10/2013
(21) Application No.9085/DELNP/2013 A
(43) Publication Date : 19/12/2014

(54) Title of the invention : RECEIVING APPARATUS AND METHOD TRANSMISSION APPARATUS AND METHOD AND PROGRAM

(51) International classification :H04N7/173,H04H20/40
(31) Priority Document No :61/480033
(32) Priority Date :28/04/2011
(33) Name of priority country :U.S.A.
(86) International Application No :PCT/JP2012/060614
Filing Date :19/04/2012
(87) International Publication No :WO 2012/147620
(61) Patent of Addition to Application Number :NA
Filing Date :NA
(62) Divisional to Application Number :NA
Filing Date :NA

(71)**Name of Applicant :**
1)SONY CORPORATION
Address of Applicant :1 7 1 Konan Minato ku Tokyo 1080075 Japan
(72)**Name of Inventor :**
1)KITAHARA Jun
2)KITAZATO Naohisa
3)DEWA Yoshiharu
4)YAMAGISHI Yasuaki

(57) Abstract :
The present technology relates to a receiving apparatus and method, transmission apparatus and method and a program that enable the expansion of opportunities to program downloads of AV content. A trigger detection unit detects trigger information that is transmitted together with AV content. An application engine obtains, on the basis of the trigger information, an application program for selecting AV content that is not transmitted in real time and for which downloading can be programmed. A tentative programming recording unit records, as tentative programming, V content selected by the application program. An actual programming recording unit records, as actual programming, the tentatively programmed AV content, in the case where an identifier for downloadable AV content that is included in download in formation transmitted periodically with the AV content matches an identifier for the tentatively programmed AV content. The present invention is applicable, for example, to cases where data broadcasts are implemented in such places as the U.S.

No. of Pages : 81 No. of Claims : 12

(12) PATENT APPLICATION PUBLICATION
(19) INDIA
(22) Date of filing of Application :28/10/2013
(21) Application No.9240/DELNP/2013 A
(43) Publication Date : 19/12/2014

(54) Title of the invention : SUSTAINED RELEASE PARACETAMOL FORMULATIONS

(51) International classification :A61K9/22,A61K31/167
(31) Priority Document No :61/483320
(32) Priority Date :06/05/2011
(33) Name of priority country :U.S.A.
(86) International Application No :PCT/US2012/036528
Filing Date :04/05/2012
(87) International Publication No :WO 2012/154563
(61) Patent of Addition to Application Number :NA
Filing Date :NA
(62) Divisional to Application Number :NA
Filing Date :NA

(71)**Name of Applicant :**
1)GLAXOSMITHKLINE LLC
Address of Applicant :One Franklin Plaza 200 North 16th Street Philadelphia PA 19102 U.S.A.
(72)**Name of Inventor :**
1)BUAN Carla Valenti
2)LIU Dongzhou
3)MEGHPARA Kanji

(57) Abstract :
The present invention is directed to twice daily sustained release pharmaceutical composition of paracetamol having an immediate release phase of paracetamol and a sustained release phase of paracetamol said composition having unique and advantageous pharmacokinetic properties and a pharmaceutical composition comprising only a sustained release phase of paracetamol having unique and advantageous pharmacokinetic properties.

No. of Pages : 66 No. of Claims : 85

(12) PATENT APPLICATION PUBLICATION
(19) INDIA
(22) Date of filing of Application :28/10/2013
(21) Application No.9243/DELNP/2013 A
(43) Publication Date : 19/12/2014

(54) Title of the invention : SILICONE COATED LIGHT EMITTING DIODE

(51) International classification :H01L33/52,H01L33/50
(31) Priority Document No :13/104842
(32) Priority Date :10/05/2011
(33) Name of priority country :U.S.A.
(86) International Application No :PCT/US2012/037066
Filing Date :09/05/2012
(87) International Publication No :WO 2012/154815
(61) Patent of Addition to Application Number :NA
Filing Date :NA
(62) Divisional to Application Number :NA
Filing Date :NA

(71)**Name of Applicant :**
1)SHAT R SHIELD INC.
Address of Applicant :116 Ryan Patrick Drive Salisbury NC 28147 U.S.A.
(72)**Name of Inventor :**
1)NOLAN Robert J.
2)HARMAN Sr. Jeffery D.

(57) Abstract :
A silicone protective coating for an electronic light source and a method for applying the coating over an exposed or outer surface of the electronic light source assembled as part of or mounted to a circuit board or other substrate.

No. of Pages : 24 No. of Claims : 30

(12) PATENT APPLICATION PUBLICATION
(19) INDIA
(22) Date of filing of Application :28/10/2013
(21) Application No.9244/DELNP/2013 A
(43) Publication Date : 19/12/2014

(54) Title of the invention : A METHOD FOR PHYSICALLY WORKING AND/OR HEATING MEDIA IN PARTICULAR LIQUIDS AND DEVICE FOR CARRYING OUT THE METHOD

(51) International classification :B01J19/12,C02F1/48
(31) Priority Document No :PP 342011
(32) Priority Date :04/05/2011
(33) Name of priority country :Slovakia
(86) International Application No :PCT/EP2012/001891
Filing Date :03/05/2012
(87) International Publication No :WO 2012/150031
(61) Patent of Addition to Application Number :NA
Filing Date :NA
(62) Divisional to Application Number :NA
Filing Date :NA

(71)**Name of Applicant :**
1)GREGA Samuel
Address of Applicant :Mukacevska 10 08001 Presov Slovakia
(72)**Name of Inventor :**
1)GREGA Samuel

(57) Abstract :
The invention relates to a method for physically working and/or heating media, in particular liquids. The high expenditure of energy of the known methods can be avoided, with reduced environmental impact, by the hydrodynamically worked medium being exposed to polar and/or ionic electrochemical potentials and electrochemical signals RC AC.

No. of Pages : 34 No. of Claims : 12

(12) PATENT APPLICATION PUBLICATION
(19) INDIA
(22) Date of filing of Application :28/10/2013
(21) Application No.9245/DELNP/2013 A
(43) Publication Date : 19/12/2014

(54) Title of the invention : AMPHOTERIC POLYMER COMPOSITION

(51) International classification :C08G65/00
(31) Priority Document No :61492561
(32) Priority Date :02/06/2011
(33) Name of priority country :U.S.A.
(86) International Application No :PCT/US2012/039791
Filing Date :29/05/2012
(87) International Publication No :WO 2012/166691
(61) Patent of Addition to Application Number :NA
Filing Date :NA
(62) Divisional to Application Number :NA
Filing Date :NA

(71)**Name of Applicant :**
1)ROHM AND HAAS COMPANY
Address of Applicant :100 Independence Mall West Philadelphia PA 19106 U.S.A.
2)DOW GLOBAL TECHNOLOGIES LLC
(72)**Name of Inventor :**
1)AULD Kathleen
2)BROWN Ward Thomas
3)HENDERSON Kevin J
4)SINGH Anurima
5)VAN DYK Antony K

(57) Abstract :
The present invention relates to a composition comprising an amphoteric polymer having pendant acid groups or salts thereof and pendant mono or dialkylamino ethylene oxide groups or alkylammonium ethylene oxide groups characterized by either of the following formulas: where R1 R3 and X are as defined herein. The composition of the present invention improves hiding efficiency for coating compositions formulated using associative rheology modifiers binders and titanium dioxide.

No. of Pages : 17 No. of Claims : 9

(12) PATENT APPLICATION PUBLICATION
(19) INDIA
(22) Date of filing of Application :28/10/2013
(21) Application No.9246/DELNP/2013 A
(43) Publication Date : 19/12/2014

(54) Title of the invention : CONTACT LENS WITH SHADOW EFFECT

(51) International classification :A61B
(31) Priority Document No :NA
(32) Priority Date :NA
(33) Name of priority country :NA
(86) International Application No :PCT/US2011/032860
Filing Date :18/04/2011
(87) International Publication No :WO 2012/144975
(61) Patent of Addition to Application Number :NA
Filing Date :NA
(62) Divisional to Application Number :NA
Filing Date :NA

(71)**Name of Applicant :**
1)JOHNSON & JOHNSON VISION CARE INC.
Address of Applicant :7500 Centurion Parkway Jacksonville FL 32256 U.S.A.
(72)**Name of Inventor :**
1)BOWERS Angie L.
2)ZANINI Diana
3)WRIGHT Dawn D.
4)AUSTIN Daniel
5)DAVIES Dafydd Gerain
6)DOBROWOLSKI Marta
7)KRISHNA Arti
8)HOON LOKE Siew
9)MACKENZIE Alex
10)MILTON Andy
11)SCARFE Julian

(57) Abstract :
A contact lens with a central portion an iris portion and a peripheral portion disposed about the iris portion; wherein the iris portion contains an arcuate colored or tinted portion that provides a shadow effect; the peripheral portion can be colored white and can have a pattern that graduates to transparent towards the outer diameter of the lens.

No. of Pages : 18 No. of Claims : 16

(12) PATENT APPLICATION PUBLICATION
(19) INDIA
(22) Date of filing of Application :25/10/2013
(21) Application No.9234/DELNP/2013 A
(43) Publication Date : 19/12/2014

(54) Title of the invention : FRUITY FLAVORED COCOA PRODUCTS AND PROCESSES FOR PRODUCING SUCH COCOA PRODUCTS

(51) International classification :A23L1/27
(31) Priority Document No :61/473246
(32) Priority Date :08/04/2011
(33) Name of priority country :U.S.A.
(86) International Application No :PCT/US2012/032711
Filing Date :09/04/2012
(87) International Publication No :WO 2012/139096
(61) Patent of Addition to Application Number :NA
Filing Date :NA
(62) Divisional to Application Number :NA
Filing Date :NA

(71)**Name of Applicant :**
1)ARCHER DANIELS MIDLAND COMPANY
Address of Applicant :Archer Daniels Midland Company 4666 Faries Parkway Decatur Illinois 62526 U.S.A.
(72)**Name of Inventor :**
1)ANIJS Harrold Glenn

(57) Abstract :
Cocoa products having a fruity flavor comprising an increased amount of a fruity aroma compounds are disclosed. The cocoa products are produced by a method comprising mixing cocoa nibs de shelled cocoa beans or a combination thereof with an acid and water and roasting the acidified nibs the acidified de shelled cocoa beans or the combination thereof.

No. of Pages : 56 No. of Claims : 31

(12) PATENT APPLICATION PUBLICATION
(19) INDIA
(22) Date of filing of Application :25/10/2013
(21) Application No.9235/DELNP/2013 A
(43) Publication Date : 19/12/2014

(54) Title of the invention : METHODS AND DEVICES FOR DETECTING BOWEL PERFORATION

(51) International classification :A61B1/31,A61B1/313
(31) Priority Document No :61/473592
(32) Priority Date :08/04/2011
(33) Name of priority country :U.S.A.
(86) International Application No :PCT/US2012/032705
Filing Date :09/04/2012
(87) International Publication No :WO 2012/139092
(61) Patent of Addition to Application Number :NA
Filing Date :NA
(62) Divisional to Application Number :NA
Filing Date :NA

(71)**Name of Applicant :**
1)SENTIRE MEDICAL SYSTEMS LLC
Address of Applicant :64 Beaver Street Suite 111 New York NY 10004 U.S.A.
(72)**Name of Inventor :**
1)SCALICI Tony
2)LEONARD David
3)KRASNE David
4)HARIDAS Balakrishna
5)GARFIELD III M. Robert

(57) Abstract :
The present disclosure relates to methods and devices to detect perforation of the bowel for example resulting from surgical procedures such as laparoscopy diagnostic procedures such as colonoscopy medical conditions such as diverticulitis and trauma. The present disclosure also relates to filtration systems and electrical connector assemblies for use in the methods and devices.

No. of Pages : 69 No. of Claims : 29

(12) PATENT APPLICATION PUBLICATION
(19) INDIA
(22) Date of filing of Application :25/10/2013
(21) Application No.9236/DELNP/2013 A
(43) Publication Date : 19/12/2014

(54) Title of the invention : METHOD OF PRODUCING SUBSTANCES WITH SUPERSATURATED GAS TRANSDERMAL DELIVERY DEVICE THEREOF AND USES THEREOF

(51) International classification :A61M37/00,A61M11/04,A61M11/06
(31) Priority Document No :PCT/US2011/033060
(32) Priority Date :19/04/2011
(33) Name of priority country :U.S.A.
(86) International Application No :PCT/US2012/034314
Filing Date :19/04/2012
(87) International Publication No :WO 2012/145554
(61) Patent of Addition to Application Number :NA
Filing Date :NA
(62) Divisional to Application Number :NA
Filing Date :NA

(71)**Name of Applicant :**
1)INVISIDERM LLC
Address of Applicant :790 E. Colorado Blvd. 9th Floor Pasadena CA 91101 U.S.A.
(72)**Name of Inventor :**
1)KISS Norbert

(57) Abstract :
The present specification disclosed a noninvasive transdermal delivery device that relates generally to a handheld mechanical apparatus for noninvasive transdermal administration of gas small to large water soluble (hydrophilic) pharmaceutical agents vitamins and other therapeutic agents. Components of such delivery devices methods of producing a substance comprising a supersaturated amount of a dissolved gas as well as methods of administering a therapeutic agent using such delivery devices and methods of treating a disease or condition using such delivery devices are also disclosed.

No. of Pages : 54 No. of Claims : 35

(12) PATENT APPLICATION PUBLICATION
(19) INDIA
(22) Date of filing of Application :28/10/2013
(21) Application No.9237/DELNP/2013 A
(43) Publication Date : 19/12/2014

(54) Title of the invention : OVERLOAD RELEASE IN PARTICULAR FOR A CIRCUIT BREAKER

(51) International classification :H01H71/16,B23K9/00
(31) Priority Document No :10 2011 078 634.1
(32) Priority Date :05/07/2011
(33) Name of priority country :Germany
(86) International Application No :PCT/EP2012/061869
Filing Date :20/06/2012
(87) International Publication No :WO 2013/004505
(61) Patent of Addition to Application Number :NA
Filing Date :NA
(62) Divisional to Application Number :NA
Filing Date :NA

(71)**Name of Applicant :**
1)SIEMENS AKTIENGESELLSCHAFT
Address of Applicant :Wittelsbacherplatz 2 80333 M¼nchen Germany
(72)**Name of Inventor :**
1)DRR Andreas
2)LAUMER Xaver

(57) Abstract :
The invention relates to an overload release, in particular for a circuit breaker, comprising a metal strip (6) which is made of at least two different types of metal and around which a heat conductor (7) is wound, wherein an electrical insulator is arranged between the metal strip (6) and the heat conductor (7). The invention is characterized in that the heat conductor (7) is welded onto the metal strip (6) by means of arc welding.

No. of Pages : 11 No. of Claims : 6

(12) PATENT APPLICATION PUBLICATION
(19) INDIA
(22) Date of filing of Application :28/10/2013
(21) Application No.9238/DELNP/2013 A
(43) Publication Date : 19/12/2014

(54) Title of the invention : SCANNING REAL TIME MICROFLUIDIC THERMOCYCLER AND METHODS FOR SYNCHRONIZED THERMOCYCLING AND SCANNING OPTICAL DETECTION

(51) International classification :G01N35/02
(31) Priority Document No :61/476175
(32) Priority Date :15/04/2011
(33) Name of priority country :U.S.A.
(86) International Application No :PCT/US2012/033667
Filing Date :13/04/2012
(87) International Publication No :WO 2012/142516
(61) Patent of Addition to Application Number :NA
Filing Date :NA
(62) Divisional to Application Number :NA
Filing Date :NA

(71)**Name of Applicant :**
1)BECTON DICKINSON AND COMPANY
Address of Applicant :1 Becton Drive Franklin Lakes NJ 07417 U.S.A.
(72)**Name of Inventor :**
1)GUBATAYAO Thomas Catalino
2)HANDIQUE Kalyan
3)GANESAN Karthik
4)DRUMMOND Daniel M.

(57) Abstract :
Systems and methods for performing simultaneous nucleic acid amplification and detection. The systems and methods comprise methods for managing a plurality of protocols in conjunction with directing a sensor array across each of a plurality of reaction chambers. In certain embodiments the protocols comprise thermocycling profiles and the methods may introduce offsets and duration extensions into the thermocycling profiles to achieve more efficient detection behavior.

No. of Pages : 80 No. of Claims : 41

(12) PATENT APPLICATION PUBLICATION
(19) INDIA
(22) Date of filing of Application :28/10/2013
(21) Application No.9239/DELNP/2013 A
(43) Publication Date : 19/12/2014

(54) Title of the invention : FATTY ACID AMIDE HYDROLASE INHIBITORS FOR TREATING

(51) International classification :C07D413/04,A61K31/422,A61P25/00
(31) Priority Document No :61/478225
(32) Priority Date :22/04/2011
(33) Name of priority country :U.S.A.
(86) International Application No :PCT/US2012/034626
Filing Date :23/04/2012
(87) International Publication No :WO 2012/145737
(61) Patent of Addition to Application Number :NA
Filing Date :NA
(62) Divisional to Application Number :NA
Filing Date :NA

(71)**Name of Applicant :**
1)ALLERGAN INC.
Address of Applicant :2525 Dupont Drive Irvine California 92612 U.S.A.
(72)**Name of Inventor :**
1)WOODWARD David F.
2)MARTOS Jose L.
3)CARLING William R.
4)POLOSO Neil J.
5)WANG Jenny W.

(57) Abstract :
Compounds of Formula 1 are described herein. These compounds may be administered to a patient for treatment of suffering from pain or other FAAH mediated conditions.

No. of Pages : 57 No. of Claims : 27

(12) PATENT APPLICATION PUBLICATION
(19) INDIA
(22) Date of filing of Application :28/10/2013
(21) Application No.9251/DELNP/2013 A
(43) Publication Date : 19/12/2014

(54) Title of the invention : A PROCESS FOR EXTRACTION OF PEPTIDES AND ITS APPLICATION IN LIQUID PHASE PEPTIDE SYNTHESIS

(51) International classification :C07K1/14
(31) Priority Document No :11170094.4
(32) Priority Date :16/06/2011
(33) Name of priority country :EPO
(86) International Application No :PCT/EP2012/061266
Filing Date :14/06/2012
(87) International Publication No :WO 2012/171987
(61) Patent of Addition to Application Number :NA
Filing Date :NA
(62) Divisional to Application Number :NA
Filing Date :NA

(71)**Name of Applicant :**
1)LONZA LTD
Address of Applicant :Lonzastrasse CH 3930 Visp Switzerland
2)LONZA BRAINE S.A.
(72)**Name of Inventor :**
1)MONNAIE Didier
2)FORNI Luciano
3)GIRAUD Mathieu

(57) Abstract :
The present invention relates to a process for extraction of a peptide from a reaction mixture resulting from a peptide coupling reaction, the reaction mixture containing the peptide and a polar aprotic solvent selected from the group consisting of N IV-dimethylformamide, iV,iV-dimethylacetamide and iV-methyl-2-pyrrolidone, whereby the process comprises a step a) and a step b): step a) comprises the addition of a component al) and a component a2), whereby component a l) is toluene and component a2) is water, to the reaction mixture, so that a biphasic system with an organic layer and an aqueous layer is obtained; step b) comprises the subsequent separation of the organic layer containing the peptide from the aqueous layer. In a particularly preferred embodiment of the present invention, a combination of toluene and an organic solvent 1 selected from the group consisting of n-heptane, 2- methyl - tetrahydroiuran, ethylacetate, isopropylacetate, acetonitrile and tetrahydrofuran is used for the process for extraction. The extraction step is preferably used in a process for preparation of a peptide in liquid phase.

No. of Pages : 52 No. of Claims : 16

(12) PATENT APPLICATION PUBLICATION
(19) INDIA
(22) Date of filing of Application :25/10/2013
(21) Application No.9219/DELNP/2013 A
(43) Publication Date : 19/12/2014

(54) Title of the invention : CHIRAL SYNTHESIS OF N {3 4 DIFLUORO 2 [(2 FLUORO 4 IODOPHENYL)AMINO] 6 METHOXYPHENYL} 1 [2 3 DIHYDROXY PROPYL]CYCLOPROPANESULFONAMIDES

(51) International classification	:C07C303/38,C07C303/40,C07C309/82
(31) Priority Document No	:11167806.6
(32) Priority Date	:27/05/2011
(33) Name of priority country	:EPO
(86) International Application No	:PCT/EP2012/059717
Filing Date	:24/05/2012
(87) International Publication No	:WO 2012/163799
(61) Patent of Addition to Application Number	:NA
Filing Date	:NA
(62) Divisional to Application Number	:NA
Filing Date	:NA

(71)**Name of Applicant :**
1)BAYER INTELLECTUAL PROPERTY GMBH
Address of Applicant :Alfred Nobel Str. 10 40789 Monheim Germany
(72)**Name of Inventor :**
1)FEY Peter
2)MAYER Agathe Christine

(57) Abstract :
The present invention relates to a novel enantioselective method of preparing (S)- and (R)-enantiomers of N-{3,4-difluoro- 2-[(2-fluoro-4-iodophenyl)amino]-6-5 methoxyphenyl}-l-[2,3-dihydroxy-propyl]cyclopropanesulfonamide, to novel interme diate compounds, and to the use of said novel intermediate compounds for the preparation of said (S)- and (R)-enantiomers of N- {3,4-difluoro-2-[(2- fluoro-4-iodophenyl)amino]-6-methoxyphenyl} -1-[2,3-dihydroxy- propyl]cyclopropanesulfonamide.

No. of Pages : 115 No. of Claims : 17

(12) PATENT APPLICATION PUBLICATION
(19) INDIA
(22) Date of filing of Application :28/10/2013
(21) Application No.9259/DELNP/2013 A
(43) Publication Date : 19/12/2014

(54) Title of the invention : WIRELESS DETONATORS WITH STATE SENSING AND THEIR USE

(51) International classification :F42D1/00
(31) Priority Document No :61/480021
(32) Priority Date :28/04/2011
(33) Name of priority country :U.S.A.
(86) International Application No :PCT/US2012/035397
Filing Date :27/04/2012
(87) International Publication No :WO 2012/149277
(61) Patent of Addition to Application Number :NA
Filing Date :NA
(62) Divisional to Application Number :NA
Filing Date :NA

(71)**Name of Applicant :**
1)ORICA INTERNATIONAL PTE LTD
Address of Applicant :78 Shenton Way #06 15 Tower 2 (lippo Centre) Singapore 079120 Singapore
(72)**Name of Inventor :**
1)LOWNDS Charles Michael
2)PIEL Walter Hardy

(57) Abstract :
Wireless detonator systems present opportunities for controlled blasting of rock without the encumbrances of physical wired connections at the blast site. Disclosed herein are wireless detonator assemblies, which sense the state of environmental condition(s) of their immediate vicinity, and which are active to receive and / or process a command signal to FIRE only if the environmental condition(s) are deemed suitable or appropriate according to predetermined parameters. Also disclosed are improved methods of blasting involving such wireless detonator assemblies, as well as corresponding wireless electronic primers.

No. of Pages : 39 No. of Claims : 23

(12) PATENT APPLICATION PUBLICATION
(19) INDIA
(22) Date of filing of Application :28/10/2013
(21) Application No.9260/DELNP/2013 A
(43) Publication Date : 19/12/2014

(54) Title of the invention : METHOD FOR INJECTION MOLDING AT LOW SUBSTANTIALLY CONSTANT PRESSURE

(51) International classification :B29C45/77
(31) Priority Document No :61/488555
(32) Priority Date :20/05/2011
(33) Name of priority country :U.S.A.
(86) International Application No :PCT/US2012/038806
Filing Date :21/05/2012
(87) International Publication No :WO 2012/162227
(61) Patent of Addition to Application Number :NA
Filing Date :NA
(62) Divisional to Application Number :NA
Filing Date :NA

(71)**Name of Applicant :**
1)THE PROCTER & GAMBLE COMPANY
Address of Applicant :One Procter & Gamble Plaza Cincinnati Ohio 45202 U.S.A.
(72)**Name of Inventor :**
1)ALTONEN Gene Michael
2)BERG Charles John Jr.
3)NEUFARTH Ralph Edward
4)SCHILLER Gary Francis
5)LAYMAN John Moncrief
6)SCHARRENBERG Rainer

(57) Abstract :
Disclosed herein is a method of injection molding at low substantially constant melt pressures. Embodiments of the disclosed method now make possible a method of injection molding that is more energy and cost effective than conventional high velocity injection molding processes. Embodiments of the disclosed method surprisingly allow for the filling of a mold cavity at low melt pressure without undesirable premature hardening of the thermoplastic material in the mold cavity and without the need for maintaining a constant temperature or heated mold cavity. Heretofore it would not have been expected that a constant pressure method could be performed at low pressure without such premature hardening of the thermoplastic material when using an unheated mold cavity or cooled mold cavity.

No. of Pages : 31 No. of Claims : 15

(12) PATENT APPLICATION PUBLICATION
(19) INDIA
(22) Date of filing of Application :28/10/2013
(21) Application No.9262/DELNP/2013 A
(43) Publication Date : 19/12/2014

(54) Title of the invention : ANTI-HUMAN RECEPTOR-TYPE PROTEIN TYROSINE PHOSPHATASE σ ANTIBODY

(51) International classification :G01N33/68,C07K16/28,A61K39/395
(31) Priority Document No :2011101752
(32) Priority Date :28/04/2011
(33) Name of priority country :Japan
(86) International Application No :PCT/JP2012/061795
Filing Date :27/04/2012
(87) International Publication No :WO 2012/148003
(61) Patent of Addition to Application Number :NA
Filing Date :NA
(62) Divisional to Application Number :NA
Filing Date :NA

(71)**Name of Applicant :**
1)SBI BIOTECH CO. LTD.
Address of Applicant :Shirokanedai ST Bldg. 4-7-4, Shirokanedai Minato ku Tokyo 1080071 Japan
(72)**Name of Inventor :**
1)YAMAZAKI Tomohide
2)ZHAO Jing
3)ISHIDA Koji
4)SHIBATA Yasue
5)CHO Minkwon
6)ENDO Mayuki

(57) Abstract :
A monoclonal antibody that binds to an extracellular domain of human receptor-type protein tyrosine phosphatase s (human PTPRS), or a fragment including an antigen-binding region thereof.

No. of Pages : 135 No. of Claims : 23

(12) PATENT APPLICATION PUBLICATION
(19) INDIA
(22) Date of filing of Application :28/10/2013
(21) Application No.9264/DELNP/2013 A
(43) Publication Date : 19/12/2014

(54) Title of the invention : A BIOLOGICAL INDICATOR DEVICE FOR MONITORING THE EFFECTIVENESS OF A STERILIZATION PROCESS

(51) International classification :G01N 33/543
(31) Priority Document No :11/135,719
(32) Priority Date :24/05/2005
(33) Name of priority country :U.S.A.
(86) International Application No :PCT/US2006/018735
Filing Date :16/05/2006
(87) International Publication No :WO 2007/046865
(61) Patent of Addition to Application Number :NA
Filing Date :NA
(62) Divisional to Application Number :8006/DELNP/2007
Filed on :17/10/2007

(71)**Name of Applicant :**
1)AMERICAN STERILIZER COMPANY
Address of Applicant :5960 HEISLEY ROAD, MENTOR, OHIO 44060, UNITED STATES OF AMERICA
(72)**Name of Inventor :**
1)TRICIA A CREGGER
2)PHILLIP P FRANCISKOVICH
3)MARK J DUDA
4)ROBERT E JR. BELLOW

(57) Abstract :
A biological indicator for monitoring the effectiveness of a sterilizing, disinfecting, etc., compound or condition is disclosed which comprises a substrate having a surface layer containing functional groups thereon desirably free of silicone linking groups. The functional groups are desirably in the form of a monolayer of a uniformed distribution and of a selected quantity. Various types of microorganisms such as spores and/or etiological agents are covalently bonded to the surface layer functional groups through a crosslinking reagent and thus form a uniform number and distribution of the microorganisms and/or etiological agents. After being subjected to sterilization or other similar treatment, etc., along with various articles such as instruments, the indicator can be cultivated to determine the effectiveness of the sterilization, disinfection, etc. process.

No. of Pages : 30 No. of Claims : 6

(12) PATENT APPLICATION PUBLICATION
(19) INDIA
(22) Date of filing of Application :25/10/2013
(21) Application No.9194/DELNP/2013 A
(43) Publication Date : 19/12/2014

(54) Title of the invention : FE BASED METAL PLATE AND METHOD FOR MANUFACTURING SAME

(51) International classification :C22C38/00,C21D3/04,C21D8/12
(31) Priority Document No :2011100014
(32) Priority Date :27/04/2011
(33) Name of priority country :Japan
(86) International Application No :PCT/JP2012/061385
Filing Date :27/04/2012
(87) International Publication No :WO 2012/147922
(61) Patent of Addition to Application Number :NA
Filing Date :NA
(62) Divisional to Application Number :NA
Filing Date :NA

(71)**Name of Applicant :**
1)NIPPON STEEL & SUMITOMO METAL CORPORATION
Address of Applicant :6 1 Marunouchi 2 chome Chiyoda ku Tokyo 1008071 Japan
(72)**Name of Inventor :**
1)INAGUMA Tooru
2)TOMITA Miho
3)SAKAMOTO Hiroaki
4)MIZUHARA Youji

(57) Abstract :
According to the present invention, a base metal plate having a {100} texture in a surface part thereof is fabricated by a process in which a slab composed of a-y transformed component-type Fe-based metal containing C in an amount less than 0.02% by mass is hot-rolled at a temperature equal to or greater than the A 3 point, and is rolled in the α-phase region at a temperature from 300 °C to less than the A 3 point. By then heat-treating under predetermined conditions, an Fe-based metal plate is obtained in which the value of Z is from 2.0 to 200 when Z= (A+0.97B)/0.98C, where A, B, and C are the intensity rations by X-ray diffraction in the {001} <470>, {116} <6 12 1>, and {223} <692> directions of the plate surface.

No. of Pages : 107 No. of Claims : 15

(12) PATENT APPLICATION PUBLICATION
(19) INDIA
(22) Date of filing of Application :25/10/2013
(21) Application No.9195/DELNP/2013 A
(43) Publication Date : 19/12/2014

(54) Title of the invention : FLUOROPOLYMER SOLVENTS

(51) International classification :C08J3/09,C08J5/18,C08J3/00
(31) Priority Document No :1154907
(32) Priority Date :06/06/2011
(33) Name of priority country :France
(86) International Application No :PCT/FR2012/051248
Filing Date :05/06/2012
(87) International Publication No :WO 2012/168641
(61) Patent of Addition to Application Number :NA
Filing Date :NA
(62) Divisional to Application Number :NA
Filing Date :NA

(71)**Name of Applicant :**
1)ARKEMA FRANCE
Address of Applicant :420 rue dEstienne dOrves F 92700 Colombes France
(72)**Name of Inventor :**
1)SCHMITT Paul Guillaume
2)VAUTHRIN Mlanie

(57) Abstract :
The invention relates to a fluoropolymer solvent System including 50 wt % to 99.9 wt % of a composition (A) including dimethyl sulfoxide, and 0.1 wt % to 50 wt % of a composition (B) including at least one ketone. The invention also relates to the solutions including said solvent System and said fluoropolymer, as well as to the uses thereof for manufacturing films, membranes, and coatings.

No. of Pages : 26 No. of Claims : 14

(12) PATENT APPLICATION PUBLICATION
(19) INDIA
(22) Date of filing of Application :25/10/2013
(21) Application No.9196/DELNP/2013 A
(43) Publication Date : 19/12/2014

(54) Title of the invention : APPARATUS AND METHOD FOR MANUFACTURING COIL MEMBERS FOR CORES OF DYNAMO ELECTRIC MACHINES BY BENDING.

(51) International classification :H02K15/00,H02K15/04
(31) Priority Document No :TO2011A000435
(32) Priority Date :16/05/2011
(33) Name of priority country :Italy
(86) International Application No :PCT/EP2012/002055
Filing Date :14/05/2012
(87) International Publication No :WO 2012/156066
(61) Patent of Addition to Application Number :NA
Filing Date :NA
(62) Divisional to Application Number :NA
Filing Date :NA

(71)**Name of Applicant :**
1)ATOP S.P.A.
Address of Applicant :Strada S. Appiano 8/A I 50021 Barberino Val DElsa (FI) Italy
(72)**Name of Inventor :**
1)PONZIO Massimo
2)CORBINELLI Rubino
3)MUGELLI Maurizio

(57) Abstract :
Apparatuses and method for manufacturing coil members (230, 250) for insertion in slots of a core of an electric dynamo machine, wherein the coil members (230, 250) are formed by bending portions of an electric conductor (10). Portions of conductor of a predetermined length are fed through an aperture (80), where at least one engagement member (51) can move to engage and bend the conductor (10) so as to form the configuration of the coil member (230, 250).

No. of Pages : 33 No. of Claims : 22

(12) PATENT APPLICATION PUBLICATION
(19) INDIA
(22) Date of filing of Application :25/10/2013
(21) Application No.9197/DELNP/2013 A
(43) Publication Date : 19/12/2014

(54) Title of the invention : SHEATH FOR INTRODUCER AND INTRODUCER ASSEMBLY

(51) International classification :A61M25/08,A61M25/00
(31) Priority Document No :2011133601
(32) Priority Date :15/06/2011
(33) Name of priority country :Japan
(86) International Application No :PCT/JP2012/059908
Filing Date :11/04/2012
(87) International Publication No :WO 2012/172861
(61) Patent of Addition to Application Number :NA
Filing Date :NA
(62) Divisional to Application Number :NA
Filing Date :NA

(71)**Name of Applicant :**
1)TERUMO KABUSHIKI KAISHA
Address of Applicant :44 1 Hatagaya 2 chome Shibuya ku Tokyo 1510072 Japan
(72)**Name of Inventor :**
1)OKAMURA Ryo

(57) Abstract :
To improve the sliding movement of a long body such as a catneter even when the internal diameter of the tip of a sheath becomes smaller toward the tip. [Solution] A sheath (20) for an introducer, which is formed of a sheath tube (21) comprising a hollow portion (21a) where a long body may b e inserted, and which comprises a sheath tip (50) and a sheath main body portion (60). The internal diameter (φa) of the tip of the sheath for the inroducer becomes smaller toward the tip. At an internal surface (50a) of the sheath tip, the sheath for the introducer comprises a hydrophobic coating (71) which has a frictional coefficient lower than a mctional coefficient o f the sheath tube.

No. of Pages : 52 No. of Claims : 9

(12) PATENT APPLICATION PUBLICATION
(19) INDIA
(22) Date of filing of Application :28/10/2013
(21) Application No.9270/DELNP/2013 A
(43) Publication Date : 19/12/2014

(54) Title of the invention : DEVICE FOR CONCENTRATING SOLAR RADIATION IN AN ABSORBER

(51) International classification :F24J2/05,F24J2/14,F24J2/50
(31) Priority Document No :A 605/2011
(32) Priority Date :29/04/2011
(33) Name of priority country :Austria
(86) International Application No :PCT/AT2012/000119
Filing Date :30/04/2012
(87) International Publication No :WO 2012/145774
(61) Patent of Addition to Application Number :NA
Filing Date :NA
(62) Divisional to Application Number :NA
Filing Date :NA

(71)**Name of Applicant :**
1)HELIOVIS AG
Address of Applicant :IZ N– S¼d Strae 2d Objekt M16 A 2351 Wiener Neudorf Austria
(72)**Name of Inventor :**
1)ST–GER Elmar
2)MUNZENRIEDER Gerald

(57) Abstract :
A device (1) for concentrating solar radiation in an absorber (2), an anchoring frame (8) and an inflatable concentrator pad (3), which has a light-transmissive entry window (4) for coupling in the solar radiation and a reflector film (5) subdividing the concentrator pad (3) into at least two cavities (6, 7), wherein the reflector film (5) is designed to concentrate the solar radiation in the absorber (2) which is arranged in the cavity (6) of the concentrator pad (3), and with an anchoring frame (8), arranged outside of the concentrator pad (3), for anchoring the concentrator pad (3), wherein the absorber (2) is attached to the anchoring frame (8) by means of an absorber mount (15) and the concentrator pad (3) has at least one attachment opening (26) for the absorber mount (15) to pass through.

No. of Pages : 35 No. of Claims : 16

(12) PATENT APPLICATION PUBLICATION
(19) INDIA
(22) Date of filing of Application :10/10/2013
(21) Application No.8822/DELNP/2013 A
(43) Publication Date : 19/12/2014

(54) Title of the invention : MEASURING SYSTEM AND METHOD FOR DETERMINING NEW POINTS

(51) International classification :G01C15/00,G01S19/51,G01S19/10
(31) Priority Document No :11162505.9
(32) Priority Date :14/04/2011
(33) Name of priority country :EPO
(86) International Application No :PCT/EP2012/056758
Filing Date :13/04/2012
(87) International Publication No :WO 2012/140189
(61) Patent of Addition to Application Number :NA
Filing Date :NA
(62) Divisional to Application Number :NA
Filing Date :NA

(71)**Name of Applicant :**
1)HEXAGON TECHNOLOGY CENTER GMBH
Address of Applicant :Heinrich Wild Strasse CH 9435 Heerbrugg Switzerland
(72)**Name of Inventor :**
1)METZLER Bernhard

(57) Abstract :
The invention relates to a geodetic measuring system having at least one reference component which defines a reference point wherein an absolute position of the reference point is known and at least one new point determination component (31) which derives a relative new point position (2). It is also possible to derive mutual relative reference information between the reference component and the new point determination component in particular for the purpose of referencing with respect to the reference point position. The measuring system (1) also has an automotive unmanned controllable air vehicle wherein the air vehicle (50) has the reference component which provides the at least one reference point as a mobile reference point. The air vehicle (50) is also designed in such a manner that the reference component can be spatially freely displaced by the air vehicle (50) in particular can be positioned in a substantially fixed position.

No. of Pages : 74 No. of Claims : 15

(12) PATENT APPLICATION PUBLICATION
(19) INDIA
(22) Date of filing of Application :10/10/2013
(21) Application No.8823/DELNP/2013 A
(43) Publication Date : 19/12/2014

(54) Title of the invention : POLYCARBONATE RECOVERY FROM POLYMER BLENDS BY LIQUID CHROMATOGRAPHY

(51) International classification :B01D15/16,B01D15/18,C08G64/40
(31) Priority Document No :61/487187
(32) Priority Date :17/05/2011
(33) Name of priority country:U.S.A.
(86) International Application No :PCT/US2012/038107
Filing Date :16/05/2012
(87) International Publication No :WO 2012/158775
(61) Patent of Addition to Application Number :NA
Filing Date :NA
(62) Divisional to Application Number :NA
Filing Date :NA

(71)**Name of Applicant :**
1)SABIC INNOVATIVE PLASTICS IP B.V.
Address of Applicant :Plasticslaan 1 NL 4612 PX Bergen op Zoom Netherlands
(72)**Name of Inventor :**
1)BELL Wesley
2)ZOLLER David

(57) Abstract :
Polycarbonates are recovered from polymer blends by liquid chromatography. Polycarbonate recovered by the process can be reused in new applications. The invention can be extended to recycling of other polymers present in the blends.

No. of Pages : 38 No. of Claims : 15

(12) PATENT APPLICATION PUBLICATION
(19) INDIA
(22) Date of filing of Application :10/10/2013
(21) Application No.8824/DELNP/2013 A
(43) Publication Date : 19/12/2014

(54) Title of the invention : CUSHIONED SWING CIRCUIT

(51) International classification :E02F9/22
(31) Priority Document No :61/452661
(32) Priority Date :15/03/2011
(33) Name of priority country :U.S.A.
(86) International Application No :PCT/US2012/029176
Filing Date :15/03/2012
(87) International Publication No :WO 2012/125793
(61) Patent of Addition to Application Number :NA
Filing Date :NA
(62) Divisional to Application Number :NA
Filing Date :NA

(71)**Name of Applicant :**
1)PARKER HANNIFIN CORPORATION
Address of Applicant :6035 Parker Hannifin Corporation Cleveland OH 44124 4141 U.S.A.
(72)**Name of Inventor :**
1)HARSIA Jarmo
2)LOWMAN Roger
3)FRANZONI Germano

(57) Abstract :
A cushioned swing circuit provides the reduction of oscillation common in the operation of heavy equipment such as with boom members. The circuit utilizes a transfer of high pressure fluid flow (caused by the inertial of the swing during rapid deceleration) from one leg of the circuit to the other leg of the circuit or to the sump which serves as decompression for the oil that would ordinarily be trapped in the leg. These phenomena create the swing cushioning effect.

No. of Pages : 35 No. of Claims : 21

(12) PATENT APPLICATION PUBLICATION
(19) INDIA
(22) Date of filing of Application :10/10/2013
(21) Application No.8825/DELNP/2013 A
(43) Publication Date : 19/12/2014

(54) Title of the invention : METHOD OF TREATING ORGANIC MATERIAL TO PRODUCE METHANE GAS

(51) International classification :C12P5/02,C02F11/04,C02F11/08
(31) Priority Document No :61/475992
(32) Priority Date :15/04/2011
(33) Name of priority country :U.S.A.
(86) International Application No :PCT/SE2012/050406
Filing Date :13/04/2012
(87) International Publication No :WO 2012/141652
(61) Patent of Addition to Application Number :NA
Filing Date :NA
(62) Divisional to Application Number :NA
Filing Date :NA

(71)**Name of Applicant :**
1)REAC FUEL AB
Address of Applicant :John Ericssons vg 1 S 223 63 Lund Sweden
(72)**Name of Inventor :**
1)KARLSSON Gran
2)CARLIUS Anders

(57) Abstract :
The present invention relates to a method of treating organic materials to produce methane gas comprising the steps of: a) subjecting an organic feedstock comprising organic materials to a liquefaction process at subcritical conditions in at least one reaction stage to obtain a mixture containing low molecular weight materials and optionally lignins; b) subjecting the obtained mixture containing low molecular weight materials and optionally lignins to a methane fermentation process; wherein said organic feedstock comprises liquid water and/or is combined with liquid water before and/or during said liquefaction and the subcritical conditions for said at least one or more reaction stage(s) in a) is a temperature of 280 374°C during a reaction time of less than 1 minute wherein if more than one reaction stage is used in step a) the obtained mixture after each reaction stage is subjected to a separation of the produced low molecular weight materials from the remaining solid materials of the treated feedstock.

No. of Pages : 14 No. of Claims : 12

(12) PATENT APPLICATION PUBLICATION
(19) INDIA
(22) Date of filing of Application :10/10/2013
(21) Application No.8826/DELNP/2013 A
(43) Publication Date : 19/12/2014

(54) Title of the invention : ORAL PHARMACEUTICAL DISPERSION COMPOSITIONS

(51) International classification :A61K9/00
(31) Priority Document No :PCT/GB2011/000563
(32) Priority Date :11/04/2011
(33) Name of priority country :U.K.
(86) International Application No :PCT/GB2011/052027
Filing Date :19/10/2011
(87) International Publication No :WO 2012/140392
(61) Patent of Addition to Application Number :NA
Filing Date :NA
(62) Divisional to Application Number :NA
Filing Date :NA

(71)**Name of Applicant :**
1)AYANDA GROUP AS
Address of Applicant :Skippergata 47 N 9008 Troms¸ Norway
(72)**Name of Inventor :**
1)DRAGET Kurt Ingar
2)ENGELSEN Steinar Johan
3)SETERNES Tore
4)HATTREM Magnus
5)HAUG Ingvild Johanne

(57) Abstract :
The invention provides an oral pharmaceutical composition optionally in dose unit form comprising a lipophilic drug substance in dispersion in a physiologically tolerable aqueous carrier preferably an aqueous gel wherein said drug substance contains a functional electrostatic group having a pKa value of from 2 to 10 characterised in that said aqueous carrier has a pH at least 0.3 below or above said pKa value said pH being below said pKa where said group is acidic and above said pKa where said group is basic.

No. of Pages : 32 No. of Claims : 7

(12) PATENT APPLICATION PUBLICATION
(19) INDIA
(22) Date of filing of Application :28/10/2013
(21) Application No.9272/DELNP/2013 A
(43) Publication Date : 19/12/2014

(54) Title of the invention : DYES FOR MEMBRANES AND BIOLOGICAL STRUCTURES

(51) International classification :A61K49/00,G01N1/30
(31) Priority Document No :61/468838
(32) Priority Date :29/03/2011
(33) Name of priority country :U.S.A.
(86) International Application No :PCT/US2012/031098
Filing Date :29/03/2012
(87) International Publication No :WO 2012/135432
(61) Patent of Addition to Application Number :NA
Filing Date :NA
(62) Divisional to Application Number :NA
Filing Date :NA

(71)**Name of Applicant :**
1)KEMIN INDUSTRIES INC.
Address of Applicant :2100 Maury Street Des Moines Iowa 50317 U.S.A.
(72)**Name of Inventor :**
1)DE SOUSA MARTINS Diogo
2)RUBENS JR. Belfort
3)DE SOUZA FILHO Acacio Alves
4)MAIA Mauricio

(57) Abstract :
The present invention relates to the use of one or more natural dyes alone or in combination with other dyes for preparation of a composition to stain membranes and biological structures in order to facilitate their identification during surgical procedures. The present invention relates to the use of one or more natural dyes alone or in combination with other dyes to stain membranes and biological structures in order to facilitate their identification during surgical procedures.

No. of Pages : 31 No. of Claims : 24

(12) PATENT APPLICATION PUBLICATION
(19) INDIA
(22) Date of filing of Application :28/10/2013
(21) Application No.9273/DELNP/2013 A
(43) Publication Date : 19/12/2014

(54) Title of the invention : PACKAGING FOR MEDICAL CONTAINERS

(51) International classification :B65D51/18,B65D77/20,A61J7/00
(31) Priority Document No :11305474.6
(32) Priority Date :20/04/2011
(33) Name of priority country :EPO
(86) International Application No :PCT/EP2012/057195
Filing Date :19/04/2012
(87) International Publication No :WO 2012/143461
(61) Patent of Addition to Application Number :NA
Filing Date :NA
(62) Divisional to Application Number :NA
Filing Date :NA

(71)**Name of Applicant :**
1)BECTON DICKINSON FRANCE
Address of Applicant :11 Rue Aristide Berges F 38800 Le Pont de Claix France
(72)**Name of Inventor :**
1)PERUZZO Gregory

(57) Abstract :
This packaging (1) for medical containers comprising a tub (2) having a peripheral wall (2a) a sealing cover (3) sealable on an opening (6) of the tub (2) and a sealing envelope (4) able to protect the sealing cover (3). According to the invention said sealing envelope (4) comprises: a lower sealing part (4b) having a frame (4b) able to be sealed to the peripheral wall (2a) of the tub (2) and a bonding surface (4b) that extends outwards from the frame (4b) and an upper sealing part (4a) sealed on said bonding surface (4b) to enclose the opening (6) of the tub (2) and said sealing cover (3).

No. of Pages : 16 No. of Claims : 14

(12) PATENT APPLICATION PUBLICATION
(19) INDIA
(22) Date of filing of Application :28/10/2013
(21) Application No.9274/DELNP/2013 A
(43) Publication Date : 19/12/2014

(54) Title of the invention : PACKAGING FOR MEDICAL CONTAINERS

(51) International classification :B65D21/04,B65D71/70,A61M5/00
(31) Priority Document No :11305478.7
(32) Priority Date :21/04/2011
(33) Name of priority country :EPO
(86) International Application No :PCT/EP2012/057321
Filing Date :20/04/2012
(87) International Publication No :WO 2012/143533
(61) Patent of Addition to Application Number :NA
Filing Date :NA
(62) Divisional to Application Number :NA
Filing Date :NA

(71)**Name of Applicant :**
1)BECTON DICKINSON FRANCE
Address of Applicant :11 Rue Aristide Berges F 38800 Le Pont de Claix France
(72)**Name of Inventor :**
1)CARREL Franck
2)DOMINICY Eric
3)DUBOIS Thomas

(57) Abstract :
This packaging (1) comprises a grouping nest (5) a tub (6) hereinafter named first tub (6) and a sealing cover. According to the invention lateral walls of said first tub (6) are sloped to allow a nesting of this first tub (6) in a second identical tub (6); said first tub (6) comprises recesses (35 45 55) on the outer side of the tub forming tub and/or nest supporting pillars on the inner side of each wall and having a tub and/or nest supporting surface (31 32 41; 51) opposite the bottom of the tub the positioning of the recess (35) forming a tub supporting pillar (30) on one opposed lateral wall is different from the positioning of the recess (35) forming a tub supporting pillar (30) on the other opposed lateral wall in order to allow the nesting of this first tub (6) into a second identical tub (6) in a first relative position of the first tub while allowing the stacking of said first and second tubs (6 6) one onto the other in a second relative position of the first tub.

No. of Pages : 28 No. of Claims : 13

(12) PATENT APPLICATION PUBLICATION
(19) INDIA
(22) Date of filing of Application :28/10/2013
(21) Application No.9275/DELNP/2013 A
(43) Publication Date : 19/12/2014

(54) Title of the invention : PRODUCTION OF CHEESE WITH *S. THERMOPHILUS*

(51) International classification :A23C19/032,A23C19/05,A23C19/068
(31) Priority Document No :61/477211
(32) Priority Date :20/04/2011
(33) Name of priority country :U.S.A.
(86) International Application No :PCT/US2012/034455
Filing Date :20/04/2012
(87) International Publication No :WO 2012/145629
(61) Patent of Addition to Application Number :NA
Filing Date :NA
(62) Divisional to Application Number :NA
Filing Date :NA

(71)**Name of Applicant :**
1)DUPONT NUTRITION BIOSCIENCES APS
Address of Applicant :Langebrogade 1 P.O. Box 17 DK 1001 Copenhagen Denmark
(72)**Name of Inventor :**
1)PETERSEN Lars Wexoe

(57) Abstract :
Methods and compositions for producing cheese with and a urease inhibitor and for producing hard or semi hard cheese such as cheddar with that is partially or completely deficient in its ability to release ammonia from urea are provided. Methods and compositions for reducing the amount of open texture (e.g. slits cracks or fractures) in hard and semi hard cheeses as well as hard and semi hard cheeses that comprise one or more bacteria that are partially or completely deficient in their ability to release ammonia from urea are also provided.

No. of Pages : 31 No. of Claims : 71

(12) PATENT APPLICATION PUBLICATION
(19) INDIA
(22) Date of filing of Application :28/10/2013
(21) Application No.9278/DELNP/2013 A
(43) Publication Date : 19/12/2014

(54) Title of the invention : METHODS FOR INCREASING THE PALATABILITY OF FOOD COMPOSITIONS

(51) International classification :A23K1/165,A23K1/17,A61K8/20
(31) Priority Document No :61/518083
(32) Priority Date :29/04/2011
(33) Name of priority country :U.S.A.
(86) International Application No :PCT/US2012/034423
Filing Date :20/04/2012
(87) International Publication No :WO 2012/148809
(61) Patent of Addition to Application Number :NA
Filing Date :NA
(62) Divisional to Application Number :NA
Filing Date :NA

(71)**Name of Applicant :**
1)NESTEC S.A.
Address of Applicant :Avenue Nestle 55 CH 1800 Vevey Switzerland
(72)**Name of Inventor :**
1)GIBSON Glenn Earl

(57) Abstract :
The invention provides food compositions and methods for increasing the palatability of food compositions. In one aspect the methods comprise adding an egg and chicken flavoring to a food composition. Prior to being added to the food composition the egg and chicken flavoring can be incorporated in or on any suitable carrier such as for example on a soybean corn or wheat meal carrier. The egg and chicken flavoring has been found to increase the palatability of food compositions over corresponding conventional food compositions that do not include the egg and chicken flavoring.

No. of Pages : 15 No. of Claims : 35

(12) PATENT APPLICATION PUBLICATION
(19) INDIA
(22) Date of filing of Application :28/10/2013
(21) Application No.9252/DELNP/2013 A
(43) Publication Date : 19/12/2014

(54) Title of the invention : METHOD FOR REMOVING UNMODIFIED HEMOGLOBIN FROM CROSS LINKED HEMOGLOBIN SOLUTIONS INCLUDING POLYMERIC HEMOGLOBIN WITH HIGH TEMPERATURES SHORT TIME HEAT TREATMENT APPARATUS

(51) International classification :C07K1/34,C07K1/14,C07K14/805
(31) Priority Document No :13/097183
(32) Priority Date :29/04/2011
(33) Name of priority country :U.S.A.
(86) International Application No :PCT/US2012/034608
Filing Date :23/04/2012
(87) International Publication No :WO 2012/148832
(61) Patent of Addition to Application Number :NA
Filing Date :NA
(62) Divisional to Application Number :NA
Filing Date :NA

(71)**Name of Applicant :**
1)WONG Bing Lou
Address of Applicant :3592 S. Mall Street Irvine CA 92606 U.S.A.
2)KWOK Sui Yi
(72)**Name of Inventor :**
1)WONG Bing Lou
2)KWOK Sui Yi

(57) Abstract :
A method heat treatment of cross-linked hemoglobin solutions including polymeric hemoglobin is disclosed. The method involves contacting the hemoglobin solution with a high temperature short time heat treatment apparatus. The high temperature short time process thermally denatures unmodified tetrameric hemoglobin (hemoglobin dimer form), protein impurities (e.g.immunoglobin-G, serum albumin), bacteria, and viruses so that renal injury, vascular detrimental effects and other toxicity reactions can be avoided.

No. of Pages : 24 No. of Claims : 12

(12) PATENT APPLICATION PUBLICATION
(19) INDIA
(22) Date of filing of Application :28/10/2013
(21) Application No.9253/DELNP/2013 A
(43) Publication Date : 19/12/2014

(54) Title of the invention : PROCESS FOR HEAVY OIL AND BITUMEN UPGRADING

(51) International classification :C10G69/12
(31) Priority Document No :13/091025
(32) Priority Date :20/04/2011
(33) Name of priority country :U.S.A.
(86) International Application No :PCT/CA2011/000813
Filing Date :18/07/2011
(87) International Publication No :WO 2012/142690
(61) Patent of Addition to Application Number :NA
Filing Date :NA
(62) Divisional to Application Number :NA
Filing Date :NA

(71)**Name of Applicant :**
1)KRESNYAK Steve
Address of Applicant :101 Evergreen Plaza SW Calgary Alberta T2Y 5B2 Canada
(72)**Name of Inventor :**
1)KRESNYAK Steve

(57) Abstract :
A bitumen and heavy oil upgrading process and system is disclosed for the synthesis of hydrocarbons an example of which is synthetic crude oil (SCO). The process advantageously avoids the waste attributed to residuum and/or petcoke formation which has a dramatic effect on the yield of hydrocarbon material generated. The process integrates Fischer Tropsch technology with gasification and hydrogen rich gas stream generation. The hydrogen rich gas generation is conveniently effected using singly or in combination a hydrogen source a hydrogen rich vapour from hydroprocessing and the Fischer Tropsch process a steam methane reformer (SMR) and autothermal reformer (ATR) or a combination of SMR/ATR. The feedstock for upgrading is distilled and the bottoms fraction is gasified and converted in a Fischer Tropsch reactor. A resultant hydrogen lean syngas is then exposed to the hydrogen rich gas stream to optimize the formation of for example the synthetic crude oil. The hydrogen lean gas stream may also be effected by a water gas shift reaction singly or in combination or in addition with the hydrogen rich gas stream generation. A system for effecting the process is also characterized in the specification.

No. of Pages : 33 No. of Claims : 55

(12) PATENT APPLICATION PUBLICATION
(19) INDIA
(22) Date of filing of Application :28/10/2013
(21) Application No.9254/DELNP/2013 A
(43) Publication Date : 19/12/2014

(54) Title of the invention : ALKALOID ESTER AND CARBAMATE DERIVATIVES AND MEDICINAL COMPOSITIONS THEREOF

(51) International classification	:C07D207/14,C07D211/62,C07D453/02
(31) Priority Document No	:11164337.5
(32) Priority Date	:29/04/2011
(33) Name of priority country	:EPO
(86) International Application No	:PCT/EP2012/057062
Filing Date	:18/04/2012
(87) International Publication No	:WO 2012/146515
(61) Patent of Addition to Application Number	:NA
Filing Date	:NA
(62) Divisional to Application Number	:NA
Filing Date	:NA

(71)**Name of Applicant :**
1)CHIESI FARMACEUTICI S.p.A.
Address of Applicant :Via Palermo 26/A I 43100 Parma Italy
(72)**Name of Inventor :**
1)AMARI Gabriele
2)RICCABONI Mauro
3)DE ZANI Daniele

(57) Abstract :
The present invention relates to compounds acting as muscarinic receptor antagonists to methods of preparing such derivatives to compositions comprising them and therapeutic use thereof.

No. of Pages : 115 No. of Claims : 15

(12) PATENT APPLICATION PUBLICATION
(19) INDIA
(22) Date of filing of Application :28/10/2013
(21) Application No.9255/DELNP/2013 A
(43) Publication Date : 19/12/2014

(54) Title of the invention : METHOD AND APPARATUS FOR MEASURING DISTANCES AND METHOD FOR DETERMINING POSITIONS

(51) International classification :G01S5/04
(31) Priority Document No :1020110041183
(32) Priority Date :29/04/2011
(33) Name of priority country :Republic of Korea
(86) International Application No :PCT/KR2012/003155
Filing Date :25/04/2012
(87) International Publication No :WO 2012/148153
(61) Patent of Addition to Application Number :NA
Filing Date :NA
(62) Divisional to Application Number :NA
Filing Date :NA

(71)**Name of Applicant :**
1)ORTHOTRON CO. LTD.
Address of Applicant :709 Kranz Techno 5442 1 Sangdaewon dong Jungwon gu Seongnam si Gyeonggi do 462 729 Republic of Korea
(72)**Name of Inventor :**
1)LEE Kyungkuk

(57) Abstract :
The present invention relates to a method for measuring distances using a first signal transmitted by a first device, and a second signal, which is generated and transmitted by a target device in response to said first signal. The provided method for measuring distances is characterized in that it involves measuring a distance between a second device and said target device on the basis of a first time interval from a transmission point of said first signal to a reception point of a first portion of said second signal by said first device, a second time interval from a reception point of said first signal to a reception point of said first portion of said second signal by the second device, a delay time interval from a reception point of the first signal by said target device to a start point of said second signal, and the duration of said first portion of said second signal.

No. of Pages : 54 No. of Claims : 31

(12) PATENT APPLICATION PUBLICATION
(19) INDIA
(22) Date of filing of Application :28/10/2013
(21) Application No.9256/DELNP/2013 A
(43) Publication Date : 19/12/2014

(54) Title of the invention : COMPONENTS FOR AEROSOL DISPENSER

(51) International classification :B65D83/62
(31) Priority Document No :13/108198
(32) Priority Date :16/05/2011
(33) Name of priority country :U.S.A.
(86) International Application No :PCT/US2012/038034
Filing Date :16/05/2012
(87) International Publication No :WO 2012/158741
(61) Patent of Addition to Application Number :NA
Filing Date :NA
(62) Divisional to Application Number :NA
Filing Date :NA

(71)**Name of Applicant :**
1)THE PROCTER & GAMBLE COMPANY
Address of Applicant :One Procter & Gamble Plaza Cincinnati Ohio 45202 U.S.A.
(72)**Name of Inventor :**
1)SMITH Scott Edward

(57) Abstract :
A pressurized container usable for an aerosol dispenser (20). The container is charged with propellant (40). The container may be conveniently shipped for later product filling and/or decoration. By manufacturing the subcombination at a first location and shipping sealed to a second location flexible manufacture can be achieved. The second location can add locally popular product and decoration.

No. of Pages : 31 No. of Claims : 14

(12) PATENT APPLICATION PUBLICATION
(19) INDIA
(22) Date of filing of Application :25/10/2013
(21) Application No.9223/DELNP/2013 A
(43) Publication Date : 19/12/2014

(54) Title of the invention : FUEL SUPPLY CONTROL DEVICE AND CONTROL METHOD FOR ENGINE

(51) International classification :F02D19/06,F02D41/00,F02M21/02
(31) Priority Document No :2011101356
(32) Priority Date :28/04/2011
(33) Name of priority country :Japan
(86) International Application No :PCT/IB2012/000794
Filing Date :25/04/2012
(87) International Publication No :WO 2012/146968
(61) Patent of Addition to Application Number :NA
Filing Date :NA
(62) Divisional to Application Number :NA
Filing Date :NA

(71)**Name of Applicant :**
1)TOYOTA JIDOSHA KABUSHIKI KAISHA
Address of Applicant :1 Toyota cho Toyota shi Aichi ken 471 8571 Japan
2)AISAN KOGYO KABUSHIKI KAISHA
(72)**Name of Inventor :**
1)KOMODA Takao
2)MASUYAMA Haruki

(57) Abstract :
In an engine that includes a liquid fuel injector (3) and a gaseous fuel injector (4) connected to an intake pipe (2) via a fuel passage (5) and that switches fuel supplied into intake air between liquid fuel and gaseous fuel an electronic control unit (6) increases fuel in an amount required to fill the fuel passage (5) with gaseous fuel at the time of initial fuel injection from the gaseous fuel injector (4) after switching from liquid fuel to gaseous fuel.

No. of Pages : 28 No. of Claims : 13

(12) PATENT APPLICATION PUBLICATION
(19) INDIA
(22) Date of filing of Application :25/10/2013
(21) Application No.9224/DELNP/2013 A
(43) Publication Date : 19/12/2014

(54) Title of the invention : PROCESS FOR THE PREPARATION OF 1 (2 METHYL 4 (2 3 4 5 TETRAHYDRO 1 BENZAZEPIN 1 YLCARBONYL) BENZYLCARBAMOYL) L PROLINE N N DIMETHYLAMIDE

(51) International classification :C07D403/12,A61K31/55
(31) Priority Document No :1105537.3
(32) Priority Date :31/03/2011
(33) Name of priority country :U.K.
(86) International Application No :PCT/GB2012/050720
Filing Date :30/03/2012
(87) International Publication No :WO 2012/131389
(61) Patent of Addition to Application Number :NA
Filing Date :NA
(62) Divisional to Application Number :NA
Filing Date :NA

(71)**Name of Applicant :**
1)VANTIA LIMITED
Address of Applicant :Phi House Enterprise Road Southampton Science Park Southampton SO16 7NS U.K.
(72)**Name of Inventor :**
1)PEAL Valerie Elizabeth

(57) Abstract :
The present invention relates to a new process for the preparation of a crystalline polymorph of a vasopressin V 2 agonist.

No. of Pages : 20 No. of Claims : 9

(12) PATENT APPLICATION PUBLICATION
(19) INDIA
(22) Date of filing of Application :25/10/2013
(21) Application No.9225/DELNP/2013 A
(43) Publication Date : 19/12/2014

(54) Title of the invention : DIRECT PLUG ELEMENT WITH A PROTECTED DIRECT CONTACT

(51) International classification :H01R13/19
(31) Priority Document No :10 2011 076 992.7
(32) Priority Date :06/06/2011
(33) Name of priority country :Germany
(86) International Application No :PCT/EP2012/057378
Filing Date :23/04/2012
(87) International Publication No :WO 2012/167984
(61) Patent of Addition to Application Number :NA
Filing Date :NA
(62) Divisional to Application Number :NA
Filing Date :NA

(71)**Name of Applicant :**
1)ROBERT BOSCH GMBH
Address of Applicant :Postfach 30 02 20 70442 Stuttgart Germany
(72)**Name of Inventor :**
1)PADE Wolfgang

(57) Abstract :
The invention relates to a direct plug element comprising a direct contact (5) having a contact section (51) and a connection section (52) for connection to a cable (6), and comprising a plug housing (4) in which the direct contact (5) is arranged, wherein the direct contact (5) has a chamber (50) which has at least one first opening (53), wherein the contact section (51) is arranged in the chamber (50), and wherein the contact section (51) is designed to make contact with an exposed contact region (20) of a mating piece (2) through the first opening (53).

No. of Pages : 12 No. of Claims : 10

(12) PATENT APPLICATION PUBLICATION
(19) INDIA
(22) Date of filing of Application :25/10/2013
(21) Application No.9226/DELNP/2013 A
(43) Publication Date : 19/12/2014

(54) Title of the invention : METHOD AND APPARATUS FOR GENERATING AND AUTHENTICATING SECURITY DOCUMENTS

(51) International classification :H04L9/32,G07D7/00,G06T1/00
(31) Priority Document No :61/468762
(32) Priority Date :29/03/2011
(33) Name of priority country :U.S.A.
(86) International Application No :PCT/IB2012/000622
Filing Date :27/03/2012
(87) International Publication No :WO 2012/131474
(61) Patent of Addition to Application Number :NA
Filing Date :NA
(62) Divisional to Application Number :NA
Filing Date :NA

(71)**Name of Applicant :**
1)JURA TRADE LIMITED
Address of Applicant :Feszek Utca 3 H 1125 Budapest Hungary
(72)**Name of Inventor :**
1)MANHERCZ Kalman
2)ADAM Bence
3)TAKACS Ferenc

(57) Abstract :
A method and system for generating a document for use with a personal identifier personal data and an image comprising : inputting the personal identifier into a processor; inputting the personal text data into the processor; inputting the image into the processor; generating by the processor a first Message Authentication Code (MAC) based on the personal identifier; generating by the processor a first wave structure based on the MAC; generating by the processor waved microtext based on the wave structure and the personal text data; generating by the processor a letter screen image from the input image with the waved microtext; and outputting the letter screen image. A method and system for verification of the generated document is also disclosed.

No. of Pages : 20 No. of Claims : 20

(12) PATENT APPLICATION PUBLICATION
(19) INDIA
(22) Date of filing of Application :28/10/2013
(21) Application No.9285/DELNP/2013 A
(43) Publication Date : 19/12/2014

(54) Title of the invention : CUSTOMIZED ELEVATOR PASSENGER INTERFACE

(51) International classification :B66B1/06,B66B1/34,B66B1/46
(31) Priority Document No :NA
(32) Priority Date :NA
(33) Name of priority country :NA
(86) International Application No :PCT/US2011/044155
Filing Date :15/07/2011
(87) International Publication No :WO 2013/012407
(61) Patent of Addition to Application Number :NA
Filing Date :NA
(62) Divisional to Application Number :NA
Filing Date :NA

(71)**Name of Applicant :**
1)OTIS ELEVATOR COMPANY
Address of Applicant :10 Farm Springs Farmington Connecticut 06032 U.S.A.
(72)**Name of Inventor :**
1)JOYCE Matthew
2)CHAPMAN Ashley
3)SAKAI Osamu
4)ST. LOUIS Baudelaire
5)STANLEY Jannah A.
6)JAYACHANDRAN Vijay

(57) Abstract :
An exemplary elevator passenger interface device includes a passenger communication component that facilitates communications between a passenger and an elevator system. Such communications include passenger input to request elevator service and information provided to the passenger. A controller controls the passenger communication component to control its functionality including providing selected information to the passenger. The controller includes a customization module configured to change the functionality of the passenger communication component responsive to authorized user input that is distinct from the passenger input. The authorized user input includes a selection of at least one of a feature used to present information to a passenger or a feature used to allow a passenger to request elevator service.

No. of Pages : 13 No. of Claims : 18

(12) PATENT APPLICATION PUBLICATION
(19) INDIA
(22) Date of filing of Application :24/10/2013
(21) Application No.9156/DELNP/2013 A
(43) Publication Date : 19/12/2014

(54) Title of the invention : PESTICIDAL MIXTURES

(51) International classification :A01N65/00
(31) Priority Document No :61/469845
(32) Priority Date :31/03/2011
(33) Name of priority country :U.S.A.
(86) International Application No :PCT/US2012/031690
Filing Date :30/03/2012
(87) International Publication No :WO 2012/135763
(61) Patent of Addition to Application Number :NA
Filing Date :NA
(62) Divisional to Application Number :NA
Filing Date :NA

(71)**Name of Applicant :**
1)BAYER CROPSCIENCE LP
Address of Applicant :1540 Drew Avenue Davis CA 95618 U.S.A.
(72)**Name of Inventor :**
1)KLEIN Clark D.
2)WILLIS Rebecca
3)JOSE Luis
4)AMES Nigel

(57) Abstract :
The present invention relates to a pesticidal mixture comprising, as active I) at least one active compound I selected from the group consisting of the Streptomyces ga/bus strain ha\;ng accession number NRRL 30232, the Streptomyces ga/blls strain having accession number NRRL 50334, a mutant of said strains, a variant of said strains, a metabolite produced by said strains, a supernatant obtained from the whole broth culture of said strains and a solvent extract of said supematants, wherein said mutant and variant have the identifying characteristics substantially identical to those of said strains, and 2) at least one active compound II selected from the groups A.I to A.27 as defined in the description, in synergistically effective amounts

No. of Pages : 51 No. of Claims : 15

(12) PATENT APPLICATION PUBLICATION
(19) INDIA
(22) Date of filing of Application :24/10/2013
(21) Application No.9157/DELNP/2013 A
(43) Publication Date : 19/12/2014

(54) Title of the invention : WATER GATE

(51) International classification :E02B7/20
(31) Priority Document No :1153565
(32) Priority Date :26/04/2011
(33) Name of priority country :France
(86) International Application No :PCT/EP2012/057513
Filing Date :25/04/2012
(87) International Publication No :WO 2012/146595
(61) Patent of Addition to Application Number :NA
Filing Date :NA
(62) Divisional to Application Number :NA
Filing Date :NA

(71)**Name of Applicant :**
1)ALSTOM RENEWABLE TECHNOLOGIES
Address of Applicant :82 avenue Lon Blum F 38100 Grenoble France
(72)**Name of Inventor :**
1)CARDIS Michel
2)MICHEL Alain

(57) Abstract :
The invention relates to a water-gate (100) that is intended to withstand pressure exerted by a liquid, said water-gate comprising: an essentially flat shell plate (1); and a plurality of thin cores (2) extending along the length of the shell plate (1), substantially parallel to one another. Each core (2) is sohdly connected to the shell plate (1) and pierced with multiple disjoint holes (201-207). According to the invention, the water-gate (100) comprises at least one stiffener (401-404) formed by assembling multiple elements which are aligned along a longitudinal axis of the stiffener (401- 404) and which each extend between the cores (2) without passing through said cores (2). Each element is solidly connected to a face of at least one core (2) around one of the holes (201-207).

No. of Pages : 21 No. of Claims : 10

(12) PATENT APPLICATION PUBLICATION
(19) INDIA
(22) Date of filing of Application :24/10/2013
(21) Application No.9158/DELNP/2013 A
(43) Publication Date : 19/12/2014

(54) Title of the invention : UNDERWATER VEHICLE EQUIPPED WITH ELECTROCHEMICAL MEANS FOR GENERATING ELECTRICAL ENERGY

(51) International classification :F42B19/36,F42B19/00
(31) Priority Document No :11 53813
(32) Priority Date :04/05/2011
(33) Name of priority country :France
(86) International Application No :PCT/EP2012/058295
Filing Date :04/05/2012
(87) International Publication No :WO 2012/150350
(61) Patent of Addition to Application Number :NA
Filing Date :NA
(62) Divisional to Application Number :NA
Filing Date :NA

(71)**Name of Applicant :**
1)DCNS
Address of Applicant :40 42 rue du Docteur Finlay F 75015 Paris France
(72)**Name of Inventor :**
1)CIPOLLA Thierry
2)LEBRUN Christophe

(57) Abstract :
The invention relates to an underwater vehicle equipped with electrochemical means for generating electrical energy, characterized in that it comprises an information processing unit (2) connected, at the input, to sensors (4) of a parameter chosen from the group comprising the temprature, the pressure and the hydrogen concentration of the water in the surroundings of the vehicle and of the electrochemical means of this vehicle, and, at the output, to signal-emitting means (5) for emitting signais for authorizing the approach or not of the vehicle, by an operator, depending on whether the acquired value of the parameter of the electrochemical means is or is not within a predetermined parameter range about the corresponding parameter value of the water in the surroundings of the underwater vehicle.

No. of Pages : 10 No. of Claims : 9

(12) PATENT APPLICATION PUBLICATION
(19) INDIA
(22) Date of filing of Application :28/10/2013
(21) Application No.9290/DELNP/2013 A
(43) Publication Date : 19/12/2014

(54) Title of the invention : EXTRACELLULAR MATRIX MATERIAL VALVE CONDUIT AND METHODS OF MAKING THEREOF

(51) International classification :A61F2/24
(31) Priority Document No :61/490693
(32) Priority Date :27/05/2011
(33) Name of priority country :U.S.A.
(86) International Application No :PCT/US2012/039441
Filing Date :24/05/2012
(87) International Publication No :WO 2012/166549
(61) Patent of Addition to Application Number :NA
Filing Date :NA
(62) Divisional to Application Number :NA
Filing Date :NA

(71)**Name of Applicant :**
1)CORMATRIX CARDIOVASCULAR INC.
Address of Applicant :286 South Main Street Suite 200 Alpharetta GA 30009 U.S.A.
(72)**Name of Inventor :**
1)MATHENY Robert G.
2)GILBERT Christian L.
3)NOVICK William

(57) Abstract :
Methods for forming extracellular matrix valve conduits are disclosed. Extracellular matrix valve conduits produced using the disclosed methods are also disclosed. Methods of sterilizing and decellularizing extracellular matrix materials are also disclosed.

No. of Pages : 89 No. of Claims : 21

(12) PATENT APPLICATION PUBLICATION
(19) INDIA
(22) Date of filing of Application :28/10/2013
(21) Application No.9292/DELNP/2013 A
(43) Publication Date : 19/12/2014

(54) Title of the invention : PROTEIN BEVERAGE AND METHOD OF MAKING THE SAME

(51) International classification :A23L2/38,A23C9/152,A23L2/52
(31) Priority Document No :13/078918
(32) Priority Date :01/04/2011
(33) Name of priority country :U.S.A.
(86) International Application No :PCT/US2012/031707
Filing Date :30/03/2012
(87) International Publication No :WO 2012/135774
(61) Patent of Addition to Application Number :NA
Filing Date :NA
(62) Divisional to Application Number :NA
Filing Date :NA

(71)**Name of Applicant :**
1)NEXT PROTEINS INC.
Address of Applicant :Attention: David A. Jenkins President and Chief Executive Officer 5674 El Camino Real Suite L Carlsbad CA 92008 7130 U.S.A.
(72)**Name of Inventor :**
1)SHERWOOD Shawn
2)RITTMANIC Steven Anthony
3)JENKINS David A.

(57) Abstract :
A protein beverage composition and a method of making it relate to a beverage including a protein essentially free of caseinate and derived from an aqueous protein isolate collected from membrane filtration isolation of the protein and without substantial drying wherein the protein beverage composition exhibits a pH ranging from about 2.0 to about 4.6. Substantial solubility of the protein is maintained in the beverage composition and the protein beverage is essentially free of active microbes known to be harmful to human health both at the time of packaging of the protein beverage and for a time period of at least one year after packaging.

No. of Pages : 70 No. of Claims : 139

(12) PATENT APPLICATION PUBLICATION
(19) INDIA
(22) Date of filing of Application :10/10/2013
(21) Application No.8827/DELNP/2013 A
(43) Publication Date : 19/12/2014

(54) Title of the invention : APPARATUS FOR IMPROVED BREATHING

(51) International classification :A61F5/56
(31) Priority Document No :13/080167
(32) Priority Date :05/04/2011
(33) Name of priority country :U.S.A.
(86) International Application No :PCT/US2012/032407
Filing Date :05/04/2012
(87) International Publication No :WO 2012/138914
(61) Patent of Addition to Application Number :NA
Filing Date :NA
(62) Divisional to Application Number :NA
Filing Date :NA

(71)**Name of Applicant :**
1)AIRWAY TECHNOLOGIES LLC
Address of Applicant :3418 Midcourt Drive Suite 114 Carrollton TX 76006 U.S.A.
(72)**Name of Inventor :**
1)THORNTON W. Keith

(57) Abstract :
According to one embodiment an apparatus for improved breathing is provided. The apparatus may include an improved oral appliance an improved mask an improved coupler to couple an oral appliance to a mask and/or a combination of these improvements.

No. of Pages : 80 No. of Claims : 16

(12) PATENT APPLICATION PUBLICATION
(19) INDIA
(22) Date of filing of Application :10/10/2013
(21) Application No.8828/DELNP/2013 A
(43) Publication Date : 19/12/2014

(54) Title of the invention : TRANSPORT REFRIGERATION SYSTEM AND METHOD FOR OPERATING

(51) International classification :F25B49/02
(31) Priority Document No :61/471463
(32) Priority Date :04/04/2011
(33) Name of priority country :U.S.A.
(86) International Application No :PCT/US2012/030645
Filing Date :27/03/2012
(87) International Publication No :WO 2012/138500
(61) Patent of Addition to Application Number :NA
Filing Date :NA
(62) Divisional to Application Number :NA
Filing Date :NA

(71)**Name of Applicant :**
1)CARRIER CORPORATION
Address of Applicant :One Carrier Place Farmington Connecticut 06034 U.S.A.
(72)**Name of Inventor :**
1)RUSIGNUOLO Giorgio
2)BUSHNELL Peter R.
3)AWWAD Nader S.
4)SING Bruce E.
5)REASON John R.
6)FERGUSON Benjamin E.

(57) Abstract :
A refrigeration system having a refrigeration unit (22) for providing temperature conditioned air to a temperature controlled space an engine (26) and an electric generation device (24) driven by the engine is provided with a battery system (28) for supplying electric power. A method of operating the transport refrigeration includes during a high cooling demand mode operating the engine (26) to drive the electric generation device (24) for supplying electric power and simultaneously employing the battery system (28) for supplying electric power to jointly power the plurality of power demand loads (50 42 46 48) of the refrigerant unit.

No. of Pages : 21 No. of Claims : 20

(12) PATENT APPLICATION PUBLICATION
(19) INDIA
(22) Date of filing of Application :10/10/2013
(21) Application No.8829/DELNP/2013 A
(43) Publication Date : 19/12/2014

(54) Title of the invention : SEMI ELECTRIC MOBILE REFRIGERATED SYSTEM

(51) International classification :B60H1/00,B60H1/32
(31) Priority Document No :61/471470
(32) Priority Date :04/04/2011
(33) Name of priority country :U.S.A.
(86) International Application No :PCT/US2012/030537
Filing Date :26/03/2012
(87) International Publication No :WO 2012/138497
(61) Patent of Addition to Application Number :NA
Filing Date :NA
(62) Divisional to Application Number :NA
Filing Date :NA

(71)**Name of Applicant :**
1)CARRIER CORPORATION
Address of Applicant :One Carrier Place Farmington Connecticut 06034 U.S.A.
(72)**Name of Inventor :**
1)RUSIGNUOLO Giorgio
2)AWWAD Nader S.
3)SING Bruce E.
4)CHOPKO Robert A.
5)REASON John R.

(57) Abstract :
A power supply system for a transport refrigeration system (20) includes an engine (26) coupled to a compressor (32) of a refrigeration unit for direct drive powering the compressor (32) and a generator (24) arranged to also be direct driven by the engine (26) for generating electric power. The generator (24) and the compressor (32) are mounted to a common drive shaft (25) driven by the engine (26) and the generator (24) may be integrated with the compressor (32). The power supply system may further include an alternator (50) arranged to be belt driven by the engine (26) for generating DC electric power. A battery pack (28) may be provided for storing and supplying additional DC power. During peak load demand on the refrigeration unit (20) the engine (26) may be operated with the generator (24) switched off to directly drive the compressor (32) and direct current may be drawn from the battery pack (28) to drive the condenser/gas cooler and evaporator fans (40 44).

No. of Pages : 22 No. of Claims : 20

(12) PATENT APPLICATION PUBLICATION
(19) INDIA
(22) Date of filing of Application :29/10/2013
(21) Application No.9300/DELNP/2013 A
(43) Publication Date : 19/12/2014

(54) Title of the invention : METHOD FOR PRODUCTION OF PROPPANTS

(51) International classification :C09K8/80,B02C17/00,E21B43/02
(31) Priority Document No :2011901418
(32) Priority Date :15/04/2011
(33) Name of priority country :Australia
(86) International Application No :PCT/AU2012/000196
Filing Date :29/02/2012
(87) International Publication No :WO 2012/139151
(61) Patent of Addition to Application Number :NA
Filing Date :NA
(62) Divisional to Application Number :NA
Filing Date :NA

(71)**Name of Applicant :**
1)YULEBA MINERALS PTY LTD
Address of Applicant :PO Box 49 Yuleba Queensland 4427 Australia
(72)**Name of Inventor :**
1)MOORE Gregory James
2)BARNETT Timothy Neil

(57) Abstract :
Disclosed is an apparatus and method for producing frac sand, in order to meet size, sphericity and roundness standards, from a feedstock such as natural sand. The feedstock is rotated as slurry in a conditioning cell, so that it self abrades to produce frac sand with the required characteristics.

No. of Pages : 13 No. of Claims : 10

(12) PATENT APPLICATION PUBLICATION
(19) INDIA
(22) Date of filing of Application :29/10/2013
(21) Application No.9301/DELNP/2013 A
(43) Publication Date : 19/12/2014

(54) Title of the invention : 3 AMINOMETHYL 3 5 5 TRIMETHYL CYCLOHEXYLAMINE PREPARATION METHOD

(51) International classification :C07C211/36,C07C209/48
(31) Priority Document No :201110231786.4
(32) Priority Date :08/08/2011
(33) Name of priority country :China
(86) International Application No :PCT/CN2011/079372
Filing Date :06/09/2011
(87) International Publication No :WO 2013/020316
(61) Patent of Addition to Application Number :NA
Filing Date :NA
(62) Divisional to Application Number :NA
Filing Date :NA

(71)**Name of Applicant :**
1)WANHUA CHEMICAL GROUP CO. LTD.
Address of Applicant :No.7 Xingfu South Road Yantai Shandong 264002 China
2)NINGBO WANHUA POLYURETHANES CO. LTD.
(72)**Name of Inventor :**
1)CHEN Changsheng
2)LI Yuan
3)ZHAO Wenjuan
4)CUI Hongyin
5)HUA Weiqi

(57) Abstract :
Provided is a 3-aminomethyl-3,5,5-trimethylcyclohexylamine preparation method. A feeding flow of 5 3-cyano-3,5,5-trimethy(cyclohexylimine is reacted with NH3 and hydrogen in the presence of a hydrogenation catalyst; the method is characterized by: firstly adding a basic compound to the feeding flow of 3-cyano-3,5,5-trimethylcyclohexylimine, and then after a portion of 3-cyano-3,5,5-trimethylcyclohexylimine has reacted, adding an acidic 10 compound to reaction materials for further hydrogenation reaction to prepare the product. The method ensures that the aminonitrile content in the product is low, thus effectively reducing the duration of the reaction and greatly reducing the consumption of the catalyst during the hydrogenation reaction process.

No. of Pages : 18 No. of Claims : 15

(12) PATENT APPLICATION PUBLICATION
(19) INDIA
(22) Date of filing of Application :22/10/2013

(21) Application No.9122/DELNP/2013 A
(43) Publication Date : 19/12/2014

(54) Title of the invention : INTERVERTEBRAL IMPLANT FOR MUTUAL SITUATING OF ADJACENT VERTEBRAE

(51) International classification :A61F2/44
(31) Priority Document No :P394841
(32) Priority Date :12/05/2011
(33) Name of priority country :Poland
(86) International Application No :PCT/PL2012/000031
Filing Date :11/05/2012
(87) International Publication No :WO 2012/154068
(61) Patent of Addition to Application Number :NA
Filing Date :NA
(62) Divisional to Application Number :NA
Filing Date :NA

(71)**Name of Applicant :**
1)LFC SPLKA Z.O.O.
Address of Applicant :ul Kozuchowska 41 PL 65 364 Zielona G³ra Poland
(72)**Name of Inventor :**
1)CIUPIK Lechoslaw Franciszek

(57) Abstract :
Intervertebral implant for mutual situating of adjacent vertebrae contains a cover (1) in a shape close to the rectangle, in which is fixed a driving mechanism. In a lateral wall (2) of the cover (1) a manipulative hole (3) is made. The cover (1) is equipped with one open seat (4). The driving mechanism composes situated in the seat 4 and anchoring in one of displaced vertebrae one rotational element (5) with an axis 6 mounted for an axial movement in lateral walls (2) of the cover (1) perpendicularly to the direction of the displace ment of vertebrae against each other, cooperating with the connecting element (7). The rotational element (5) is equipped with anchoring latches 8 projecting over the height of covers (1) walls (2) from the side contacting with one of displaced vertebrae and anchoring in this vertebrae. Anchor ing latches (8) have got a form of paddles of equal dimen sions and shapes. The connecting element (7), situated within the diameter of the manipulative hole (3) of the cover (1), co operates with not visible on the figure separate driving tool. The connecting element (7) constitutes one shaped end of the axis (6) of the rotational element (5). The implant is equipped with two blockades of the rotation of the driving element. One of blockades of the driving mechanism has got a form of a pin (9a) situated within the diameter of the ma nipulative hole (3) of the cover (1) and cooperating with not visible on this figure recess in the axis (6) of the rotational element (5), whereas the second blockade of the rotation con stitutes a latch 9b fixed to the cover (1) on the opposite side than the pin (9a), cooperating with the rotational element (5). The lower surface of one of lateral walls (2) of the cover (1) is equipped with anchoring latches (10) in a form of paddles,

No. of Pages : 81 No. of Claims : 28

(12) PATENT APPLICATION PUBLICATION
(19) INDIA
(22) Date of filing of Application :29/10/2013
(21) Application No.9309/DELNP/2013 A
(43) Publication Date : 19/12/2014

(54) Title of the invention : RUBBER COMPOSITE CORD FOR A TREAD OF A PNEUMATIC TIRE

(51) International classification :B29D30/52,B60C11/18,C08L21/00
(31) Priority Document No :1154317
(32) Priority Date :18/05/2011
(33) Name of priority country :France
(86) International Application No :PCT/EP2012/059030
Filing Date :15/05/2012
(87) International Publication No :WO 2012/156407
(61) Patent of Addition to Application Number :NA
Filing Date :NA
(62) Divisional to Application Number :NA
Filing Date :NA

(71)**Name of Applicant :**
1)COMPAGNIE GENERALE DES ETABLISSEMENTS MICHELIN
Address of Applicant :12 cours Sablon F 63000 Clermont Ferrand France
2)MICHELIN RECHERCHE ET TECHNIQUE S.A.
(72)**Name of Inventor :**
1)ABAD Vincent
2)HIDROT Jean Denis

(57) Abstract :
The invention relates to a composite cord (8; 80-82; 90-92) comprising a rubber core (83; 93) and a rubber sheath (84-86; 94-96) enclosing the core at least partially, the compositions of the core and of the sheath being diffrent, said cord being characterized in that the rubber core is based on at least one diene elastomer and more than 30 weight percent of elastomer of a filler A, the particles of which are nanoparticles having an average size by weight of less than 500 nm, and in that the rubber sheath is based on at least one diene elastomer having 0 to less than 30 pce of filler A, the particles of which are nanoparticles having an average size by weight of less than 500 nm, and more than 70 pce of a filler B, the particles of which are particles having a mdian size by weight greater than 1 µm.

No. of Pages : 43 No. of Claims : 29

(12) PATENT APPLICATION PUBLICATION
(19) INDIA
(22) Date of filing of Application :29/10/2013
(21) Application No.9312/DELNP/2013 A
(43) Publication Date : 19/12/2014

(54) Title of the invention : SURFACE MEASUREMENT SYSTEM AND METHOD

(51) International classification :G01B7/34
(31) Priority Document No :13/171516
(32) Priority Date :29/06/2011
(33) Name of priority country :U.S.A.
(86) International Application No :PCT/US2012/043723
Filing Date :22/06/2012
(87) International Publication No :WO 2013/003222
(61) Patent of Addition to Application Number :NA
Filing Date :NA
(62) Divisional to Application Number :NA
Filing Date :NA

(71)**Name of Applicant :**
1)WHEELABRATOR GROUP INC.
Address of Applicant :601 Corporate Circle Suite 150 Golden CO 80401 U.S.A.
(72)**Name of Inventor :**
1)BITZEL Raymond
2)JONES Johnathan

(57) Abstract :
A surface measurement method includes inspecting a plurality of samples of a first irregular workpiece surface in two dimensions, determining, based on the inspections of the samples, a total number of surface peaks on each of the plurality of samples, and deriving a control limit from a statistical variation of the total number of surface peaks on each of the samples. The control limit specifies an out-of-tolerance condition for the total number of surface peaks on a second irregular workpiece surface. The method further includes inspecting a portion of the second irregular workpiece surface in two dimensions, determining, based on the inspection of the portion of the second irregular workpiece surface, a total number of surface peaks on the portion, and comparing the total number of surface peaks on the portion to the control limit to determine whether the second irregular workpiece surface is in the out-of- tolerance condition.

No. of Pages : 28 No. of Claims : 20

(12) PATENT APPLICATION PUBLICATION
(19) INDIA
(22) Date of filing of Application :25/10/2013
(21) Application No.9200/DELNP/2013 A
(43) Publication Date : 19/12/2014

(54) Title of the invention : FIXED AMOUNT DISCHARGE CONTAINER

(51) International classification :A61M5/315
(31) Priority Document No :2011098003
(32) Priority Date :26/04/2011
(33) Name of priority country :Japan
(86) International Application No :PCT/JP2012/061236
Filing Date :26/04/2012
(87) International Publication No :WO 2012/147862
(61) Patent of Addition to Application Number :NA
Filing Date :NA
(62) Divisional to Application Number :NA
Filing Date :NA

(71)**Name of Applicant :**
1)SANTEN PHARMACEUTICAL CO. LTD.
Address of Applicant :9 19 Shimoshinjo 3 chome Higashiyodogawa ku Osaka shi Osaka 5338651 Japan
(72)**Name of Inventor :**
1)KOJIMA Takashi
2)YOKOUCHI Nobuo
3)KATO Naoki
4)KAITSUKA Kenji
5)IIDA Takeshi

(57) Abstract :
A fixea amount discharge container (1) having as syringe (3) and a piston (8) that is inserted into the syringe (3) so as to be movable in a longitudinal direction and that forms a liquid chamber with the syringe (3). Either the syringe (3) or the piston (8) is provided with a guide part (3c) that extends in the longitudinal direction thereof. The other part from between the syringe (3) and the piston (8) is provided with a slider (9) capable of moving within the guide part (3c) together with either the syringe (3) or the piston (8). The guide part (3c) is provided with a target position contact part (3j) that is contacted by the slider (9) when the liquid chamber volume becomes equal to a target volume.

No. of Pages : 36 No. of Claims : 4

(12) PATENT APPLICATION PUBLICATION
(19) INDIA
(22) Date of filing of Application :25/10/2013
(21) Application No.9201/DELNP/2013 A
(43) Publication Date : 19/12/2014

(54) Title of the invention : ENGINE CONTROL DEVICE

(51) International classification :F02D29/02
(31) Priority Document No :NA
(32) Priority Date :NA
(33) Name of priority country :NA
(86) International Application No :PCT/JP2011/062429
Filing Date :31/05/2011
(87) International Publication No :WO 2012/164677
(61) Patent of Addition to Application Number :NA
Filing Date :NA
(62) Divisional to Application Number :NA
Filing Date :NA

(71)**Name of Applicant :**
1)HONDA MOTOR CO. LTD.
Address of Applicant :1 1 Minami Aoyama 2 chome Minato ku Tokyo 1078556 Japan
(72)**Name of Inventor :**
1)OSAWA Toshifumi
2)TAKAISHI Yusuke
3)INOSE Koji
4)IKEDA Naoki
5)SAKAMOTO Junichi
6)NIWA Junya

(57) Abstract :
The present invention is provided with the following: a first operation member (34L) and a second operation member (34R) for braking a front wheel and a rear wheel of a saddle-ridden vehicle (10), and an engine control means (144) that automatically stops and restarts an engine (102) mounted in the saddle-ridden vehicle (10) in response to the operational state of the first operation member (34L) and the second operation member (34R). When a prescribed amount of time has passed while the first operation member (34L) and the second operation member (34R) are both in an operated state, the engine control means (144) automatically stops the engine (102); when the first operation member (34L) and the second operation member (34R) are both released, the engine control means (144) restarts the engine (102); and when only one of the first operation member (34L) and the second operation member (34R) is operated after the engine (102) has automatically been stopped, the engine control means (144) allows the engine (102) to continue in the automatically stopped state.

No. of Pages : 54 No. of Claims : 7

(12) PATENT APPLICATION PUBLICATION
(19) INDIA
(22) Date of filing of Application :25/10/2013
(21) Application No.9202/DELNP/2013 A
(43) Publication Date : 19/12/2014

(54) Title of the invention : LIQUID EJECTION SYSTEM INCLUDING DROP VELOCITY MODULATION

(51) International classification :B41J2/105,B41J2/21
(31) Priority Document No :13/115482
(32) Priority Date :25/05/2011
(33) Name of priority country :U.S.A.
(86) International Application No :PCT/US2012/038298
Filing Date :17/05/2012
(87) International Publication No :WO 2012/162082
(61) Patent of Addition to Application Number :NA
Filing Date :NA
(62) Divisional to Application Number :NA
Filing Date :NA

(71)**Name of Applicant :**
1)EASTMAN KODAK COMPANY
Address of Applicant :343 State Street Rochester NY 14650 2201 U.S.A.
(72)**Name of Inventor :**
1)PANCHAWAGH Hrishikesh V.
2)MARCUS Michael Alan
3)KATERBERG James A.
4)LOPEZ Ali Gerardo
5)ADIGA Shashishekar P.
6)GRACE Jeremy Matthew

(57) Abstract :
A continuous liquid ejection system includes a liquid chamber in fluidic communication with a nozzle. The liquid chamber contains liquid under pressure sufficient to eject a liquid jet through the nozzle. A drop formation device is associated with the liquid jet and is actuatable to produce a modulation in the liquid jet that cause portions of the liquid jet to break off into a series of drop pairs traveling along a path. Each drop pair is separated in time on average by a drop pair period. Each drop pair includes a first drop and a second drop. A charging device includes a charge electrode associated with the liquid jet and a source of varying electrical potential between the charge electrode and the liquid jet. The source of varying electrical potential provides a waveform that includes a period that is equal to the drop pair period. The waveform also includes a first distinct voltage state and a second distinct voltage state. The charging device is synchronized with the drop formation device to produce a first charge state on the first drop and to produce a second charge state on the second drop. A drop velocity modulation device varies a relative velocity of a first drop and a second drop of a selected drop pair to control whether the first drop and the second drop of the selected drop pair combine with each other to form a combined drop. The combined drop has a third charge state. A deflection device causes the first drop having the first charge state to travel along a first path causes the second drop having the second charge state to travel along a second path and causes the combined drop having the third charge state to travel along a third path.

No. of Pages : 71 No. of Claims : 48

(12) PATENT APPLICATION PUBLICATION
(19) INDIA
(22) Date of filing of Application :28/10/2013
(21) Application No.9286/DELNP/2013 A
(43) Publication Date : 19/12/2014

(54) Title of the invention : GAS MIST PRESSURE BATHING METHOD AND GAS MIST PRESSURE BATHING SYSTEM`

(51) International classification :A61H35/00,A61H33/10
(31) Priority Document No :2011242316
(32) Priority Date :04/11/2011
(33) Name of priority country :Japan
(86) International Application No :PCT/JP2012/078312
Filing Date :01/11/2012
(87) International Publication No :WO 2013/065778
(61) Patent of Addition to Application Number :NA
Filing Date :NA
(62) Divisional to Application Number :NA
Filing Date :NA

(71)**Name of Applicant :**
1)ACP JAPAN CO. LTD.
Address of Applicant :27 3 Hongo 2 chome Bunkyo ku Tokyo 1130033 Japan
(72)**Name of Inventor :**
1)NAKAMURA Shoichi

(57) Abstract :
Provided are a gas mist pressure bathing method and a gas mist pressure bathing system that improve the efficiency of absorbing a gas mist from the skin and mucous membranes of a living body. The gas mist pressure bathing method is provided with a first step, a second step and a third step. The first step involves supplying a gas mist and gas for a predetermined time to at least a first cover 51 of a living body cover member 50 having said first cover 51 and a second cover 55 positioned outside of the first cover 51, the inside of said second cover 55 being substantially sealed; covering the skin and mucous membranes of the living body; and forming a space wherein the gas mist and gas supplied by a gas mist generating means 30 are sealed. The second step involves discharging the gas mist and gas from the first cover 51 and/or the second cover 55. The third step involves supplying the gas mist and gas for a predetermined time from the gas mist generating means 30 to the first cover 51 and the second cover 55, and keeping the pressure inside at least the second cover 55 in a predetermined range. The first to third steps are repeated multiple times.

No. of Pages : 52 No. of Claims : 23

(12) PATENT APPLICATION PUBLICATION
(19) INDIA
(22) Date of filing of Application :28/10/2013
(21) Application No.9287/DELNP/2013 A
(43) Publication Date : 19/12/2014

(54) Title of the invention : GAS MIST PRESSURE BATHING METHOD AND GAS MIST PRESSURE BATHING SYSTEM

(51) International classification :A61H 33/10
(31) Priority Document No :2011242317
(32) Priority Date :04/11/2011
(33) Name of priority country :Japan
(86) International Application No :PCT/JP2012/078313
Filing Date :01/11/2012
(87) International Publication No :WO 2013/065779
(61) Patent of Addition to Application Number :NA
Filing Date :NA
(62) Divisional to Application Number :NA
Filing Date :NA

(71)**Name of Applicant :**
1)ACP JAPAN CO. LTD.
Address of Applicant :27 3 Hongo 2 chome Bunkyo ku Tokyo 1130033 Japan
(72)**Name of Inventor :**
1)NAKAMURA Shoichi

(57) Abstract :
Provided are a gas mist pressure bathing method and a gas mist pressure bathing system that improve the efficiency of absorbing a gas mist from the skin and mucous membranes of a living body. The gas mist pressure bathing method is provided with a first step a second step and a third step. The first step involves supplying a gas mist for a predetermined time to at least a first cover (51) of a living body cover member (50) having said first cover (51) and a second cover (55) positioned outside of the first cover (51) the inside of said second cover (55) being substantially sealed; covering the skin and mucous membranes of the living body; and forming a space wherein the gas mist supplied by a gas mist generating means (30) is sealed. The second step involves discharging the gas mist from the first cover (51) and/or the second cover (55). The third step involves supplying the gas mist for a predetermined time from the gas mist generating means (30) to the first cover (51) and the second cover (55) and keeping the pressure inside at least the second cover (55) in a predetermined range. The first to third steps are repeated multiple times.

No. of Pages : 57 No. of Claims : 24

(12) PATENT APPLICATION PUBLICATION
(19) INDIA
(22) Date of filing of Application :28/10/2013
(21) Application No.9288/DELNP/2013 A
(43) Publication Date : 19/12/2014

(54) Title of the invention : CLOSED COKE SLURRY SYSTEM AND METHOD FOR GAINING SELLABLE PETROLEUM COKE PIECES OUT OF SOLIDIFIED PETROLEUM COKE IN A COKE DRUM UNIT

(51) International classification :C10B33/00,C10B39/04,C10B55/00
(31) Priority Document No :11165699.7
(32) Priority Date :11/05/2011
(33) Name of priority country :EPO
(86) International Application No :PCT/EP2011/062061
Filing Date :14/07/2011
(87) International Publication No :WO 2012/152340
(61) Patent of Addition to Application Number :NA
Filing Date :NA
(62) Divisional to Application Number :NA
Filing Date :NA

(71)**Name of Applicant :**
1)TRIPLAN AG
Address of Applicant :Auf der Krautweide 32 65812 Bad Soden Germany
(72)**Name of Inventor :**
1)GAST Ralf

(57) Abstract :
A closed system (2) for gaining sellable petroleum coke pieces out of solidified petroleum coke in a coke drum unit (4 8) comprises a coke drum unit (4 8) containing solidified petroleum coke; a coke crushing unit (6 10) for crushing petroleum coke into sellable petroleum coke pieces; a closed slurry pipe (12) leading petroleum coke slurry to a closed slurry pit (14); a dewatering bin unit (18 20) for receiving petroleum coke slurry from the slurry pit (14) for collecting the sellable petroleum coke pieces and for leading filtered water and petroleum coke fines out of it; a closed drain water pit (24) separate from the slurry pit (14) for receiving the filtered water and the petroleum coke fines from the dewatering bin unit (18 20); a water settling tank (28) receiving the filtered water and the petroleum coke from the drain water pit (24) and for separating the petroleum coke fines from the water such that the petroleum coke fines collect in the bottom part of the water settling tank (28) and for leading the petroleum coke fines into the slurry pit (14) where they mix with the petroleum coke slurry; a clean water tank (29) for receiving the purified water from the upper part of the water settling tank (28); and a removal unit (52) for removing the sellable petroleum coke pieces from the dewatering bin unit (18 20).

No. of Pages : 29 No. of Claims : 22

(12) PATENT APPLICATION PUBLICATION
(19) INDIA
(22) Date of filing of Application :24/10/2013
(21) Application No.9171/DELNP/2013 A
(43) Publication Date : 19/12/2014

(54) Title of the invention : ARTICLE INCLUDING VISUAL SIGNAL FOR COMMUNICATION OF DEPTH PERCEPTION

(51) International classification :A61F13/15
(31) Priority Document No :201110125981.9
(32) Priority Date :06/05/2011
(33) Name of priority country :China
(86) International Application No :PCT/US2012/035938
Filing Date :01/05/2012
(87) International Publication No :WO 2012/154444
(61) Patent of Addition to Application Number :NA
Filing Date :NA
(62) Divisional to Application Number :NA
Filing Date :NA

(71)**Name of Applicant :**
1)MCNEIL PPC INC.
Address of Applicant :199 Grandview Road Skillman NJ 08558 U.S.A.
(72)**Name of Inventor :**
1)CASTANARES Karen Grace B.
2)SHAOJUN Mei
3)MARCELO Ana Maria Elena
4)BUHAN Xu

(57) Abstract :
The present invention generally relates to an absorbent article including a plurality of non colored portions and a plurality of colored portions having a single color the plurality of non colored portions and colored portions cooperating to create a perception of depth by a user viewing a top surface of the absorbent article.

No. of Pages : 28 No. of Claims : 14

(12) PATENT APPLICATION PUBLICATION
(19) INDIA
(22) Date of filing of Application :24/10/2013
(21) Application No.9172/DELNP/2013 A
(43) Publication Date : 19/12/2014

(54) Title of the invention : SOLID COMPOSITIONS CONTAINING GLYCOL ETHER AND WATER

(51) International classification :A61K9/14
(31) Priority Document No :201110127008.0
(32) Priority Date :06/05/2011
(33) Name of priority country :China
(86) International Application No :PCT/US2012/036332
Filing Date :03/05/2012
(87) International Publication No :WO 2012/154500
(61) Patent of Addition to Application Number :NA
Filing Date :NA
(62) Divisional to Application Number :NA
Filing Date :NA

(71)**Name of Applicant :**
1)JOHNSON & JOHNSON CONSUMER COMPANIES INC.
Address of Applicant :199 Grandview Road Skillman NJ 08558 U.S.A.
(72)**Name of Inventor :**
1)WU Lisa
2)LAI Mac
3)ZHU Yin

(57) Abstract :
Provided are solid compositions comprising a glycol ether a gelling agent and water. Also provided are methods of making such compositions.

No. of Pages : 32 No. of Claims : 30

(12) PATENT APPLICATION PUBLICATION
(19) INDIA
(22) Date of filing of Application :24/10/2013
(21) Application No.9173/DELNP/2013 A
(43) Publication Date : 19/12/2014

(54) Title of the invention : LIQUID DISPENSING DEVICE EQUIPPED WITH AN AIR DUCT

(51) International classification :B05B11/04,B05B11/00
(31) Priority Document No :1153834
(32) Priority Date :04/05/2011
(33) Name of priority country :France
(86) International Application No :PCT/FR2012/050962
Filing Date :30/04/2012
(87) International Publication No :WO 2012/150409
(61) Patent of Addition to Application Number :NA
Filing Date :NA
(62) Divisional to Application Number :NA
Filing Date :NA

(71)**Name of Applicant :**
1)REXAM HEALTHCARE LA VERPILLIERE
Address of Applicant :20 avenue de la Gare F 38290 La Verpilli¨re France
(72)**Name of Inventor :**
1)GREVIN Guillaume
2)PAINCHAUD Ga«tan
3)DECOCK Thierry
4)JULIA Xavier

(57) Abstract :
The liquid dispensing device (10) comprises: an air duct (26) for the passage of air from the outside to the inside of a liquid container (12); a shut-off member (30), known as an air diffusion member, for shutting off the air duct (26), said member being made from a non-porous air-permeable polymer; and an insulating jacket (32) which insulates the diffusion member (30) and is configured such that the diffusion member (30) is not in contact with the liquid in the container, said jacket (32) including an lment (54) allowing the passage of air into the container (12).

No. of Pages : 23 No. of Claims : 10

(12) PATENT APPLICATION PUBLICATION
(19) INDIA
(22) Date of filing of Application :24/10/2013
(21) Application No.9174/DELNP/2013 A
(43) Publication Date : 19/12/2014

(54) Title of the invention : THIOPHENE AZO CARBOXYLATE DYES AND LAUNDRY CARE COMPOSITIONS CONTAINING THE SAME

(51) International classification :C09B29/00,C09B69/00,C11D3/42
(31) Priority Document No :61/492935
(32) Priority Date :03/06/2011
(33) Name of priority country :U.S.A.
(86) International Application No :PCT/US2012/039537
Filing Date :25/05/2012
(87) International Publication No :WO 2012/166584
(61) Patent of Addition to Application Number :NA
Filing Date :NA
(62) Divisional to Application Number :NA
Filing Date :NA

(71)**Name of Applicant :**
1)MILLIKEN & COMPANY
Address of Applicant :920 Milliken Road M 495 Spartanburg South Carolina 29303 U.S.A.
(72)**Name of Inventor :**
1)TORRES Eduardo
2)BRUHNKE John D.
3)DEY Sanjeev K.
4)MIRACLE Gregory S.

(57) Abstract :
This application relates to thiophene azo carboxylate dyes for use as hueing agents, laundry care compositions com - prising such dyes that may serve as hueing agents, processes for making such dyes and laundry care compositions and methods of using the same. The aforementioned dyes contain a formally charged moiety and are generally comprised of at least two components: at least one chromophore component and at least one polymeric component. Suitable chromophore components generally fluoresce blue, red, violet, or purple color when exposed to ultraviolet light, or they may absorb light to reflect these same shades. Such dyes are advantageous in providing a hueing effect, for example, a whitening effect to fabrics, while not building up over time and causing undesirable blue discoloration to the treated fabrics. Such dyes are also generally stable to bleaching agents used in laundry care compositions.

No. of Pages : 120 No. of Claims : 16

(12) PATENT APPLICATION PUBLICATION
(19) INDIA
(22) Date of filing of Application :24/10/2013
(21) Application No.9176/DELNP/2013 A
(43) Publication Date : 19/12/2014

(54) Title of the invention : PACKAGING BAG AND METHOD OF MANUFACTURING PACKAGING BAG

(51) International classification :B65D75/62
(31) Priority Document No :2011119517
(32) Priority Date :27/05/2011
(33) Name of priority country :Japan
(86) International Application No :PCT/JP2012/062839
Filing Date :18/05/2012
(87) International Publication No :WO 2012/165180
(61) Patent of Addition to Application Number :NA
Filing Date :NA
(62) Divisional to Application Number :NA
Filing Date :NA

(71)**Name of Applicant :**
1)OTSUKA PHARMACEUTICAL CO. LTD.
Address of Applicant :2 9 Kanda Tsukasamachi Chiyoda ku Tokyo 1018535 Japan
(72)**Name of Inventor :**
1)YAMADA Shohei

(57) Abstract :
This packaging bag is provided with a cut for serving as an opening starting point, and an easy cut portion disposed on an extension line of the cut in a direction of opening, such that the easy cut portion is disposed o extend from a point on one side of a back seal portion o a point on the other side of the back seal portion, and each end of the easy cut portion is disposed to be apart from a side end portion of a bag main body.

No. of Pages : 36 No. of Claims : 9

(12) PATENT APPLICATION PUBLICATION
(19) INDIA
(22) Date of filing of Application :24/10/2013
(21) Application No.9177/DELNP/2013 A
(43) Publication Date : 19/12/2014

(54) Title of the invention : APPARATUS AND METHOD FOR IDENTIFYING ONE OR MORE AMYLOID BETA PLAQUES IN A PLURALITY OF DISCRETE OCT RETINAL LAYERS

(51) International classification :A61B3/10,G01N21/25,G01N21/64
(31) Priority Document No :61/468818
(32) Priority Date :29/03/2011
(33) Name of priority country :U.S.A.
(86) International Application No :PCT/US2012/031010
Filing Date :28/03/2012
(87) International Publication No :WO 2012/135382
(61) Patent of Addition to Application Number :NA
Filing Date :NA
(62) Divisional to Application Number :NA
Filing Date :NA

(71)**Name of Applicant :**
1)VERDOONER Steven
Address of Applicant :318 Parker Place Oswego IL 60543 U.S.A.
(72)**Name of Inventor :**
1)VERDOONER Steven

(57) Abstract :
The present invention is an apparatus to produce an OCT of an eye or a brain of a patient to identify one or more plaques in a plurality of discrete OCT retinal layers. The present invention also includes a plurality of methods for identifying one or more plaques in a plurality of discrete OCT retinal layers that can include a contrast agent and a normative database.

No. of Pages : 27 No. of Claims : 25

(12) PATENT APPLICATION PUBLICATION
(19) INDIA
(22) Date of filing of Application :17/10/2013
(21) Application No.8986/DELNP/2013 A
(43) Publication Date : 19/12/2014

(54) Title of the invention : METHOD SYSTEM ACCESS POINT AND COMPUTER PROGRAM PRODUCT FOR ENHANCING THE USABLE BANDWIDTH BETWEEN OF A TELECOMMUNICATIONS NETWORK AND A USER EQUIPMENT

(51) International classification :H04L5/00
(31) Priority Document No :PCT/EP2011/002322
(32) Priority Date :10/05/2011
(33) Name of priority country :EPO
(86) International Application No :PCT/EP2012/001973
Filing Date :08/05/2012
(87) International Publication No :WO 2012/152430
(61) Patent of Addition to Application Number :NA
Filing Date :NA
(62) Divisional to Application Number :NA
Filing Date :NA

(71)**Name of Applicant :**
1)DEUTSCHE TELEKOM AG
Address of Applicant :Friedrich Ebert Allee 140 53113 Bonn Germany
(72)**Name of Inventor :**
1)KLATT Axel

(57) Abstract :
The invention is related to a method for enhancing the usable bandwidth between on the one hand an access point of a radio access network of a telecommunications network, and on the other hand a User Equipment of a subscriber of the telecommunications network, wherein the User Equipment and the access point mutually communicate based on a standardized mobile communication technology using carrier aggregation of at least a first communication carrier and a second communication carrier, wherein the first communication carrier has a first carrier frequency and wherein the second communication carrier has a second carrier frequency, wherein the first carrier frequency is a standardized and licensed frequency and related to the communication technology, and wherein the second carrier frequency is a frequency in a frequency range out of the following: - from 6.765 to 6.795 MHz, - from 13.553 to 13.567 MHz, - from 26.957 to 27.283 MHz, - from 40.66 to 40.70 MHz, - from 433.05 to 434.79 MHz, - from 902 to 928 MHz, - from 2.400 to 2.500 GHz, - from 5.725 to 5.875 GHz, - from 24.00 GHz to 24.25 GHz, - from 61.0 GHz to 6 1.5 GHz, - from 122 GHz to 123 GHz and - from 244 GHz to 246 GHz.

No. of Pages : 25 No. of Claims : 15

(12) PATENT APPLICATION PUBLICATION
(19) INDIA
(22) Date of filing of Application :17/10/2013

(21) Application No.8987/DELNP/2013 A
(43) Publication Date : 19/12/2014

(54) Title of the invention : GEAR BOX

(51) International classification :F16H3/087,B60K17/28,B60T1/08
(31) Priority Document No :11503364
(32) Priority Date :18/04/2011
(33) Name of priority country :Sweden
(86) International Application No :PCT/SE2012/050377
Filing Date :05/04/2012
(87) International Publication No :WO 2012/144947
(61) Patent of Addition to Application Number :NA
Filing Date :NA
(62) Divisional to Application Number :NA
Filing Date :NA

(71)**Name of Applicant :**
1)SCANIA CV AB
Address of Applicant :S 151 87 Sdertlje Sweden
(72)**Name of Inventor :**
1)SLAPAK Dieter

(57) Abstract :
The invention relates to a gearbox to a method for connecting extra equipment via the gearbox and to a means of transport. The gearbox comprises a first shaft with at least two journalled gearwheels in the respective form of a first gearwheel intended to drive the first shaft in a first direction and a second gearwheel or gearwheels intended to drive the first shaft in a second direction. The gearbox further comprises devices for when necessary locking the gearwheels situated on the first shaft to for joint rotation with said shaft. The gearbox comprises also a second shaft with at least two fixed gearwheels one of them being a second gearwheel intended to cooperate with the first gearwheel for operation in the first direction and a third shaft with a third gearwheel which can be in or out of engagement with the first and second gearwheels for operation in the first direction. The invention is characterised in that the first gearwheel intended for operation in the first direction is also in engagement with one or more further power transmitting means used for connecting at least one form of extra equipment e.g. a retarder or a power take off.

No. of Pages : 21 No. of Claims : 19

(12) PATENT APPLICATION PUBLICATION
(19) INDIA
(22) Date of filing of Application :29/10/2013
(21) Application No.9327/DELNP/2013 A
(43) Publication Date : 19/12/2014

(54) Title of the invention : SAFETY TREE CLIMBING DEVICE FOR CLIMBERS

(51) International classification :A01D46/20
(31) Priority Document No :NA
(32) Priority Date :NA
(33) Name of priority country :NA
(86) International Application No :PCT/IB2011/051395
Filing Date :01/04/2011
(87) International Publication No :WO 2012/131439
(61) Patent of Addition to Application Number :NA
Filing Date :NA
(62) Divisional to Application Number :NA
Filing Date :NA

(71)**Name of Applicant :**
1)GALLAGE Harsha Kumara
Address of Applicant :N0.19 Samagi Mawatha Ekala Ja Ela 11350 Sri Lanka
(72)**Name of Inventor :**
1)GALLAGE Harsha Kumara

(57) Abstract :
This invention safety tree climbing device can be used to climb trees which have a single stem such as palm trees or coconut trees and other vertical members. It is powered by an engine and safe to operate and inexpensive to maintain. The wheel drum of the device is designed for move along the trunk of the tree without any damage to the trunk of the tree. This invention also allows a human to climb up to the top of the tree safely pluck nuts or a bundle of fruits and get down safely at a controllable speed.

No. of Pages : 16 No. of Claims : 5

(12) PATENT APPLICATION PUBLICATION
(19) INDIA
(22) Date of filing of Application :29/10/2013
(21) Application No.9328/DELNP/2013 A
(43) Publication Date : 19/12/2014

(54) Title of the invention : DEVICE AND METHOD FOR APPLYING A CONTINUOUS ELECTRIC FIELD

(51) International classification :G01N27/447,G01N27/453,B01D57/02
(31) Priority Document No:1107584.3
(32) Priority Date :06/05/2011
(33) Name of priority country :U.K.
(86) International Application No :PCT/GB2012/050973
Filing Date :04/05/2012
(87) International Publication No :WO 2012/153108
(61) Patent of Addition to Application Number :NA
Filing Date :NA
(62) Divisional to Application Number :NA
Filing Date :NA

(71)**Name of Applicant :**
1)GENETIC MICRODEVICES LIMITED
Address of Applicant :Suite F5A12 National Physical Laboratory Hampton Road Teddington Greater London TW11 0LW U.K.
(72)**Name of Inventor :**
1)SIDERIS Dimitrios
2)ILES Alex
3)JACKSON Richard

(57) Abstract :
A device comprises an electric field applying assembly adapted to generate an electric field having a discrete electric field profile; a conducting volume and an electrical interface region provided between the conducting volume and the electric field applying assembly such that the discrete electric field is applied to the material by the electric field applying assembly at a location spaced from the conducting volume wherein the electrical interface region comprises at least an ionically conductive material arranged adjacent to an in contact with the conducting volume;such that the discrete electric field applied by the electric field applying assembly is smoothed by the electrical interface region so that the electric field profile established within the conducting volume is substantially continuous.

No. of Pages : 84 No. of Claims : 65

(12) PATENT APPLICATION PUBLICATION
(19) INDIA
(22) Date of filing of Application :25/10/2013
(21) Application No.9203/DELNP/2013 A
(43) Publication Date : 19/12/2014

(54) Title of the invention : METHOD AND APPARATUS FOR PARTICLE SEPARATION

(51) International classification :B03B5/34,B04C5/26,B04C7/00
(31) Priority Document No :GE2011A000049
(32) Priority Date :28/04/2011
(33) Name of priority country :Italy
(86) International Application No :PCT/IB2012/051765
Filing Date :11/04/2012
(87) International Publication No :WO 2012/146997
(61) Patent of Addition to Application Number :NA
Filing Date :NA
(62) Divisional to Application Number :NA
Filing Date :NA

(71)**Name of Applicant :**
1)ECOMIN SRL
Address of Applicant :Via Galla 4 I 16010 Genova Italy
(72)**Name of Inventor :**
1)BOZZATO Paolo

(57) Abstract :
The invention relates to the dynamic separation of particles such as those resulting from crushing and grinding extracted minerals or recycled materials (glass, plastic, etc.). The separation is carried out by multi-stage dynamic separators (2, 3), a regulation being carried out therebetween by feeding a fluid. This latter can be a dense medium similar to that feeding the stages, and can have a rotational component with respect to the axis of the separator.

No. of Pages : 20 No. of Claims : 10

(12) PATENT APPLICATION PUBLICATION
(19) INDIA
(22) Date of filing of Application :25/10/2013
(21) Application No.9204/DELNP/2013 A
(43) Publication Date : 19/12/2014

(54) Title of the invention : METHOD FOR DETERMINING THE AMOUNT OF FUEL LEAVING AN INJECTOR

(51) International classification :F02M65/00,F02D41/40,F02D41/22
(31) Priority Document No :1101457
(32) Priority Date :13/05/2011
(33) Name of priority country :France
(86) International Application No :PCT/EP2012/001650
Filing Date :17/04/2012
(87) International Publication No :WO 2012/156015
(61) Patent of Addition to Application Number :NA
Filing Date :NA
(62) Divisional to Application Number :NA
Filing Date :NA

(71)**Name of Applicant :**
1)CONTINENTAL AUTOMOTIVE FRANCE
Address of Applicant :Service Proprit Industrielle 1 avenue Paul Ourliac F 31100 Toulouse France
2)CONTINENTAL AUTOMOTIVE GMBH
(72)**Name of Inventor :**
1)LEBLON Michael

(57) Abstract :
Method for determining the amount of fuel leaving a direct-injection diesel engine injector, said amount of fuel being supplied to a cylinder of said engine in which there moves a piston, the injection of fuel being performed by a pilot injection during which a first amount of fuel is injected into the cylinder followed by a main injection during which a second amount of fuel, greater than the first amount of fuel, is injected into the cylinder, said method involving the following steps: a) operating the engine at low idle, b) determining the maximum pressure in the cylinder, and c) determining, from said maximum pressure, the amount of fuel injected into the cylinder during the pilot injection, using a predefined one-to-one relationship, at low idle speed, between a value of the maximum pressure in the cylinder and a quantity of fuel injected into the cylinder during the pilot injection.

No. of Pages : 19 No. of Claims : 10

(12) PATENT APPLICATION PUBLICATION
(19) INDIA
(22) Date of filing of Application :25/10/2013
(21) Application No.9205/DELNP/2013 A
(43) Publication Date : 19/12/2014

(54) Title of the invention : PAPER SHEET IDENTIFICATION DEVICE

(51) International classification :G07D7/00,G07D9/00
(31) Priority Document No :2011116913
(32) Priority Date :25/05/2011
(33) Name of priority country :Japan
(86) International Application No :PCT/JP2012/062585
Filing Date :17/05/2012
(87) International Publication No :WO 2012/161063
(61) Patent of Addition to Application Number :NA
Filing Date :NA
(62) Divisional to Application Number :NA
Filing Date :NA

(71)**Name of Applicant :**
1)MARS WINTEC Co. Ltd.
Address of Applicant :1375 1 Nakanojo Sakaki machi Hanishina gun Nagano 3890602 Japan
(72)**Name of Inventor :**
1)TERASHIMA Toshikatsu

(57) Abstract :
Provided is a paper sheet identification device for identifying paper sheets such that the mechanism can b e simplified and costs can be reduced. The present invention is equipped with: a paper-sheet-feed-in unit (14) equipped with a feed roller whereby a paper sheet (34) introduced from an introduction slot (12) is conveyed diagonally until one edge of the paper sheet (34) in the widthwise direction is brought into contact with the wall surface of a control unit (41), and then the paper sheet (34) i s advanced linearly along the wall surface o f the control unit (41); a papersheet identifying unit (16) for identiiying the paper sheet (34) fed-in by the paper-sheet-feed-in unit (14); and a storage unit (18) for storing the paper sheet (34). The present invention is characterized in that: the aforementioned feed roller comprises a straight roller (29) and a diagonal roller (35) between which the paper sheet (34) is sandwiched; the straight roller (29) is provided on a straight-roller shaft (20); and the diagonal roller (35) is provided on a diagonal-roller shaft (21) arranged parallel to the straight-roller shaft (20), and is provided so that both sides thereof are guided by guide plates (38, 39) and so that the diagonal roller (35) is capable of rotating whilst maintaining a diagonal state in relation to the diagonal-roller shaft (21).

No. of Pages : 46 No. of Claims : 9

(12) PATENT APPLICATION PUBLICATION
(19) INDIA
(22) Date of filing of Application :25/10/2013
(21) Application No.9206/DELNP/2013 A
(43) Publication Date : 19/12/2014

(54) Title of the invention : MIXING BLOCK

(51) International classification :F02M21/04
(31) Priority Document No :61/470902
(32) Priority Date :01/04/2011
(33) Name of priority country :U.S.A.
(86) International Application No :PCT/US2012/031141
Filing Date :29/03/2012
(87) International Publication No :WO 2012/135452
(61) Patent of Addition to Application Number :NA
Filing Date :NA
(62) Divisional to Application Number :NA
Filing Date :NA

(71)**Name of Applicant :**
1)HYDROGEN ENERGY SYSTEMS LLC
Address of Applicant :12 E. Exchange Street 7th Floor Akron OH 44308 U.S.A.
(72)**Name of Inventor :**
1)SACCONE Rick M.

(57) Abstract :
A mixing block (100) to supply a throttle able hydrogen and air mixture to an internal combustion engine (107) includes a bore (106) through the mixing block between an air intake side (102) and an engine intake side (104). A slider chamber (202) is disposed orthogonal to and intersecting the bore where the slider chamber houses a movable slider (330) biased to at least partially block the bore but throttle able to overcome the bias and reduce blockage of the bore. A jet chamber (212) is disposed parallel to and intersecting the slider chamber (202) and extending away from the slider chamber a distance sufficient to accommodate a flow controller (340) where the flow controller (340) is connected to the slider on one side such that the flow controller (340) moves within the jet chamber as the slider (330) moves in the slider chamber (202).

No. of Pages : 18 No. of Claims : 10

(12) PATENT APPLICATION PUBLICATION
(19) INDIA
(22) Date of filing of Application :29/10/2013
(21) Application No.9320/DELNP/2013 A
(43) Publication Date : 19/12/2014

(54) Title of the invention : METHOD AND APPARTAUS FOR PROTECTING WIND TURBINES FROM EXTREME EVENTS

(51) International classification :G01N21/53,G01P5/26,G01P13/02
(31) Priority Document No :61/479854
(32) Priority Date :28/04/2011
(33) Name of priority country :U.S.A.
(86) International Application No :PCT/DK2012/050143
Filing Date :30/04/2012
(87) International Publication No :WO 2012/146258
(61) Patent of Addition to Application Number :NA
Filing Date :NA
(62) Divisional to Application Number :NA
Filing Date :NA

(71)**Name of Applicant :**
1)VESTAS WIND SYSTEMS A/S
Address of Applicant :Hedeager 44 DK 8200 Aarhus N Denmark
(72)**Name of Inventor :**
1)BOWYER Robert
2)WESTERGAARD Carsten Hein
3)CREABY Justin
4)SPRUCE Chris

(57) Abstract :
A wind turbine has a scanning Lidar arranged on the nacelle. The Lidar has a single scanning beam which scans about a substantially vertical axis to sense wind related data in a measurement volume a predetermined distance from the Lidar. Fast Fourier transforms of data from a plurality of points in the measurement volume are analysed to derive a peak velocity and a measure of variance. A controller receives the peak velocity and measure of variance as inputs and generates an output if the controller determines that the input data shows that the wind conditions are such that damage to the wind turbine is likely.

No. of Pages : 18 No. of Claims : 31

(12) PATENT APPLICATION PUBLICATION
(19) INDIA
(22) Date of filing of Application :29/10/2013
(21) Application No.9322/DELNP/2013 A
(43) Publication Date : 19/12/2014

(54) Title of the invention : BEARING HOUSING OF AN EXHAUST GAS TURBOCHARGER

(51) International classification :F02B39/00,F01D25/16,F01D25/24
(31) Priority Document No :102011016715.3
(32) Priority Date :11/04/2011
(33) Name of priority country :Germany
(86) International Application No :PCT/US2012/029622
Filing Date :19/03/2012
(87) International Publication No :WO 2012/141846
(61) Patent of Addition to Application Number :NA
Filing Date :NA
(62) Divisional to Application Number :NA
Filing Date :NA

(71)**Name of Applicant :**
1)BORGWARNER INC.
Address of Applicant :Patent Department 3850 Hamlin Road Auburn Hills Michigan 48326 U.S.A.
(72)**Name of Inventor :**
1)WATANPOUR Jens
2)BAUMGARTL Andreas
3)HEMER Josef Hans

(57) Abstract :
The invention relates to a bearing housing (1) of an exhaust gas turbocharger (EGT) having a mounting bore (2); having a bearing device (3) which has two bearing bushes (4 5) which are arranged in the mounting bore (2) between which bearing bushes is arranged a spacer (6); having a rotational speed sensor (7) which engages into a sensor recess (8) of the spacer (6); and having a locating pin (9) which is screwed into a pin bore (10) and which engages with its pin head (12) into a pin recess (11) of the spacer (6); wherein the pin recess (11) is formed as a slot.

No. of Pages : 14 No. of Claims : 11

(12) PATENT APPLICATION PUBLICATION
(19) INDIA
(22) Date of filing of Application :29/10/2013
(21) Application No.9324/DELNP/2013 A
(43) Publication Date : 19/12/2014

(54) Title of the invention : EXHAUST GAS TURBOCHARGER

(51) International classification :F02B39/14,F02B39/00,F01D25/18
(31) Priority Document No :10 2011 016 916.4
(32) Priority Date :13/04/2011
(33) Name of priority country :Germany
(86) International Application No :PCT/US2012/031792
Filing Date :02/04/2012
(87) International Publication No :WO 2012/141924
(61) Patent of Addition to Application Number :NA
Filing Date :NA
(62) Divisional to Application Number :NA
Filing Date :NA

(71)**Name of Applicant :**
1)BORGWARNER INC.
Address of Applicant :Patent Department 3850 Hamlin Road Auburn Hills Michigan 48326 U.S.A.
(72)**Name of Inventor :**
1)HORNBACH Johannes

(57) Abstract :
The invention relates to an exhaust gas turbocharger (1) having a compressor (2); having a turbine (3); and having a bearing housing (4) which has a lubricant device (5) for shaft bearings (6 7) which lubricant device can be connected via a lubricant feed line (8) to an engine lubricant circuit wherein a lubricant storage vessel (9) is connected between the lubricant feed line (8) and the lubricant device (5) of the bearing housing (4).

No. of Pages : 8 No. of Claims : 7

(12) PATENT APPLICATION PUBLICATION
(19) INDIA
(22) Date of filing of Application :29/10/2013
(21) Application No.9326/DELNP/2013 A
(43) Publication Date : 19/12/2014

(54) Title of the invention : THREE COLUMN TWO SHAFT TYPE SOLAR TRACKING APPARATUS USING CROSS SHAPED CONNECTION PIECE AND DIRECT CYLINDER

(51) International classification :F24J2/38,F24J2/52,H01L31/042
(31) Priority Document No :1020110044868
(32) Priority Date :13/05/2011
(33) Name of priority country :Republic of Korea
(86) International Application No :PCT/KR2011/008398
Filing Date :07/11/2011
(87) International Publication No :WO 2012/157824
(61) Patent of Addition to Application Number :NA
Filing Date :NA
(62) Divisional to Application Number :NA
Filing Date :NA

(71)**Name of Applicant :**
1)EOM Boon do
Address of Applicant :Hyundai apartment 205 303 868 Banwol dong Hwaseong si Gyeonggi do 445 983 Republic of Korea
(72)**Name of Inventor :**
1)EOM Boon do

(57) Abstract :
This invention called 3 columns dual axis solar tracker using universal joints and linear cylinders uses universal joints of 2 degrees freedom and a hinge of 1 degree freedom to form X axis for the suns azimuth and Y axis for the suns altitude and linear actuators by electric, pneumatic or hydraulic system. The structure of this invention supports the whole weights and the external forces by a main fixed column and 2 auxiliary columns of linear cylinders and can be built big in size and large in capacity so that it minimizes a damage of green fields and allows to use the land naturally. And when 2 columns is fixed and the rest column is a linear cylinder, 3 columns dual axis solar tracker is changed to 3 columns single tracker more rigid. And a office, rooms for power control, electric storage system, rainwater storage system, transport facilities and others can be built in the main big column or the structure between 2 fixed columns.

No. of Pages : 32 No. of Claims : 10

(12) PATENT APPLICATION PUBLICATION
(19) INDIA
(22) Date of filing of Application :29/10/2013
(21) Application No.9340/DELNP/2013 A
(43) Publication Date : 19/12/2014

(54) Title of the invention : RECIPROCATING PUMP VALVE ASSEMBLY WITH THERMAL RELIEF

(51) International classification :F15B13/02,F16K15/04
(31) Priority Document No :61/479487
(32) Priority Date :27/04/2011
(33) Name of priority country :U.S.A.
(86) International Application No :PCT/US2012/034974
Filing Date :25/04/2012
(87) International Publication No :WO 2012/149005
(61) Patent of Addition to Application Number :NA
Filing Date :NA
(62) Divisional to Application Number :NA
Filing Date :NA

(71)**Name of Applicant :**
1)GRACO MINNESOTA INC.
Address of Applicant :88 11th Avenue Northeast Minneapolis Minnesota 55413 1894 U.S.A.
(72)**Name of Inventor :**
1)BAUCK Mark L.
2)YOU Zaixing
3)WU Xueshui
4)GRANDAHL Clinton Craig Jr.

(57) Abstract :
A reciprocating pump comprises a cylinder an inlet check valve a piston an outlet check valve and a purge circuit. The cylinder has a first end and a second end. The inlet check valve is disposed proximate a first end of the cylinder. The piston is disposed within the cylinder between the inlet check valve and the second end. The outlet check valve is disposed within the piston. The purge circuit extends across the inlet check valve and the outlet check valve to fluidly couple the first end and the second end.

No. of Pages : 19 No. of Claims : 21

(12) PATENT APPLICATION PUBLICATION
(19) INDIA
(22) Date of filing of Application :28/10/2013
(21) Application No.9289/DELNP/2013 A
(43) Publication Date : 19/12/2014

(54) Title of the invention : STERILIZED ACELLULAR EXTRACELLULAR MATRIX COMPOSITIONS AND METHODS OF MAKING THEREOF

(51) International classification :A61L2/00,A61L2/18,A61L2/20
(31) Priority Document No :61/490873
(32) Priority Date :27/05/2011
(33) Name of priority country :U.S.A.
(86) International Application No :PCT/US2012/039413
Filing Date :24/05/2012
(87) International Publication No :WO 2012/166538
(61) Patent of Addition to Application Number :NA
Filing Date :NA
(62) Divisional to Application Number :NA
Filing Date :NA

(71)**Name of Applicant :**
1)CORMATRIX CARDIOVASCULAR INC.
Address of Applicant :286 South Main Street Suite 200 Alpharetta GA 30009 U.S.A.
(72)**Name of Inventor :**
1)MATHENY Robert G.

(57) Abstract :
Methods for sterilizing and decellularizing extracellular matrix materials are disclosed. Extracellular matrix compositions produced using the disclosed methods are also disclosed.

No. of Pages : 48 No. of Claims : 24

(12) PATENT APPLICATION PUBLICATION
(19) INDIA
(22) Date of filing of Application :29/10/2013
(21) Application No.9349/DELNP/2013 A
(43) Publication Date : 19/12/2014

(54) Title of the invention : INDUSTRIAL PROCESS FOR THE PREPARATION OF N ALKYL N TRIALKYLSILYLAMIDES

(51) International classification :C07F7/10
(31) Priority Document No :11161122.4
(32) Priority Date :05/04/2011
(33) Name of priority country :EPO
(86) International Application No :PCT/EP2012/055947
Filing Date :02/04/2012
(87) International Publication No :WO 2012/136617
(61) Patent of Addition to Application Number :NA
Filing Date :NA
(62) Divisional to Application Number :NA
Filing Date :NA

(71)**Name of Applicant :**
1)PEPTISYNTHA SA
Address of Applicant :310 Rue de Ransbeek B 1120 Bruxelles Belgium
(72)**Name of Inventor :**
1)CALLENS Roland
2)COLLIN Andre

(57) Abstract :
The present invention relates to a process for producing N-alkyl-N- trialkylsilylamides from trialkylsilylhalides and N-alkylamides in the presence of a base and in the absence of a solvent.

No. of Pages : 17 No. of Claims : 13

(12) PATENT APPLICATION PUBLICATION
(19) INDIA
(22) Date of filing of Application :29/10/2013
(21) Application No.9350/DELNP/2013 A
(43) Publication Date : 19/12/2014

(54) Title of the invention : SHELL AND TUBE HEAT EXCHANGER

(51) International classification :F28D7/16,F28F1/02,F28F17/00
(31) Priority Document No :61/480823
(32) Priority Date :29/04/2011
(33) Name of priority country :U.S.A.
(86) International Application No :PCT/US2012/035197
Filing Date :26/04/2012
(87) International Publication No :WO 2012/149149
(61) Patent of Addition to Application Number :NA
Filing Date :NA
(62) Divisional to Application Number :NA
Filing Date :NA

(71)**Name of Applicant :**
1)CARRIER CORPORATION
Address of Applicant :1 Carrier Place Farmington Connecticut 06034 U.S.A.
(72)**Name of Inventor :**
1)ESFORMES Jack Leon
2)SISHTLA Vishnu M.

(57) Abstract :
A heat exchanger is provided and includes a shell extending between opposing tube sheets to define an interior nozzles coupled to the shell by which a first fluid is communicated with the interior and a tubular body extending between the opposing tube sheets to transmit a second fluid through the interior whereby heat transfer occurs between the first and second fluids along a heat transfer portion of the tubular body defined from respective planes of opposing faces of the opposing tube sheets the heat transfer portion having at least first and second topologies at first and second sections thereof respectively which are respectively disposed proximate to the respective planes of the opposing faces of the opposing tube sheets.

No. of Pages : 18 No. of Claims : 24

(12) PATENT APPLICATION PUBLICATION
(19) INDIA
(22) Date of filing of Application :29/10/2013
(21) Application No.9351/DELNP/2013 A
(43) Publication Date : 19/12/2014

(54) Title of the invention : METHOD AND APPARATUS FOR INDIRECT MAGNETIC TREATMENT OF FLUIDS AND GASES

(51) International classification :C10G15/08,C10G33/02,C10G32/02
(31) Priority Document No :2740584
(32) Priority Date :19/05/2011
(33) Name of priority country:Canada
(86) International Application No :PCT/EP2012/059164
Filing Date :16/05/2012
(87) International Publication No :WO 2012/156464
(61) Patent of Addition to Application Number :NA
Filing Date :NA
(62) Divisional to Application Number :NA
Filing Date :NA

(71)**Name of Applicant :**
1)PROFESSIONALS FOR ENERGY ENVIRONMENT AND WATER SOLUTIONS LTD. CO.
Address of Applicant :P.O.Box 926992 Amman 11190 Jordon
(72)**Name of Inventor :**
1)ABO HAMMOUR Zaer

(57) Abstract :
There is provided a method and apparatus for indirect magnetic treatment of fluids/gases where a magnetic or electromagnetic field having a certain dimension geometry and flux density is in a first step applied to a working fluid/gas to obtain the directly magnetized fluid/gas. Then the directly magnetized fluid/gas is used in a second step as a magnetizer or a magnetic treating agent for magnetizing indirectly the normal non magnetized fluid/gas by mixing the directly magnetized fluid/gas and normal non magnetized fluid/gas in accordance with a predetermined mixing ratio and mixing method between the directly magnetized fluid/gas and normal non magnetized working fluid/gas. Afterwards the resultant mixed or indirectly magnetized fluid/gas is used in the proper application directly or stored in a storage tank for later use. Possible applications for the invention include but not limited to all previous applications of the direct magnetic treatment of fluid/gas such as water treatment hydrocarbon fuel treatment.

No. of Pages : 41 No. of Claims : 19

(12) PATENT APPLICATION PUBLICATION
(19) INDIA
(22) Date of filing of Application :29/10/2013
(21) Application No.9352/DELNP/2013 A
(43) Publication Date : 19/12/2014

(54) Title of the invention : MALE REFLUX VALVE

(51) International classification :A61M5/14
(31) Priority Document No :61/481240
(32) Priority Date :01/05/2011
(33) Name of priority country :U.S.A.
(86) International Application No :PCT/US2012/036024
Filing Date :01/05/2012
(87) International Publication No :WO 2012/151222
(61) Patent of Addition to Application Number :NA
Filing Date :NA
(62) Divisional to Application Number :NA
Filing Date :NA

(71)**Name of Applicant :**
1)HALKEY ROBERTS CORPORATION
Address of Applicant :2700 Halkey Roberts Place N. St. Petersburg FL 33716 U.S.A.
(72)**Name of Inventor :**
1)ROGIER Stephen J.

(57) Abstract :
A male reflux valve for use with an IV line container or the like to preclude fluid from escaping therefrom unless and until the proximal body portion of the valve is accessed by an access device whereupon fluid is allowed to flow bi directionally through the valve. The valve consists of a proximal body portion a distal body portion a core or holder placed within the distal body portion a valve element or septum placed within the core to provide a seal and an actuator placed within the proximal body portion configured to engage with the valve element when the male end of the valve is connected to a female engaging member.

No. of Pages : 35 No. of Claims : 15

(12) PATENT APPLICATION PUBLICATION
(19) INDIA
(22) Date of filing of Application :29/10/2013
(21) Application No.9332/DELNP/2013 A
(43) Publication Date : 19/12/2014

(54) Title of the invention : MANAGEMENT OF GAS PRESSURE AND ELECTRODE STATE OF CHARGE IN ALKALINE BATTERIES

(51) International classification :H01M2/34,H01M10/48
(31) Priority Document No :61/602325
(32) Priority Date :23/02/2012
(33) Name of priority country :U.S.A.
(86) International Application No :PCT/US2013/027510
Filing Date :22/02/2013
(87) International Publication No :WO 2013/126839
(61) Patent of Addition to Application Number :NA
Filing Date :NA
(62) Divisional to Application Number :NA
Filing Date :NA

(71)**Name of Applicant :**
1)THE CITY UNIVERSITY OF NEW YORK
Address of Applicant :Technology Commercialization Office 555 West 57th Street Suite 1407 New York New York 10019 U.S.A.
(72)**Name of Inventor :**
1)TURNEY Damon
2)ITO Yasumasa
3)BANERJEE Sanjoy

(57) Abstract :
An inventive new system that measures gas composition and pressure in the headspace of an aqueous electrolyte battery is described. The system includes a microcontroller that can use the composition and pressure information to connect a third electrode to either the anode(s) or the cathode(s) in order to balance the state of charge between the two. Results have shown that such a system can control the gas pressure inside a sealed flooded aqueous electrolyte battery to remain below 20 kPa (3 psi) and greatly extend the useable life of the battery.

No. of Pages : 21 No. of Claims : 16

(12) PATENT APPLICATION PUBLICATION
(19) INDIA
(22) Date of filing of Application :29/10/2013
(21) Application No.9335/DELNP/2013 A
(43) Publication Date : 19/12/2014

(54) Title of the invention : VEHICLE SEAT AND SEAT BACK BOARD

(51) International classification :B60N2/44,A47C7/40
(31) Priority Document No :NA
(32) Priority Date :NA
(33) Name of priority country :NA
(86) International Application No :PCT/JP2011/060554
Filing Date :02/05/2011
(87) International Publication No :WO 2012/150633
(61) Patent of Addition to Application Number :NA
Filing Date :NA
(62) Divisional to Application Number :NA
Filing Date :NA

(71)**Name of Applicant :**
1)TOYOTA JIDOSHA KABUSHIKI KAISHA
Address of Applicant :1 Toyota cho Toyota shi Aichi 4718571 Japan
(72)**Name of Inventor :**
1)MORI Hisaya
2)AWATA Shinji
3)KOBAYASHI Hideki

(57) Abstract :
Obtained are a vehicle seat and a seat back board which enable a seat skin to be easily engaged with a resin spring. A seat back board (16) is configured in such a manner that a cover (20) can be engaged with the back spring section (38) of the seat back board (16) by engaging clips (22C) which are attached to the cover (20) side with the vertically extending clip engagement sections (59) of the seat back board (16). As a result of the configuration the cover (20) can be more easily engaged with the back spring section (38) in comparison to conventional engagement structures using hog rings etc. In addition only a pair of openings (58) is formed in the back spring section (38) of the seat back board (16) in order to provide the vertically extending clip engagement sections (59) and this means that deterioration in the formability of the back spring section (38) can be avoided.

No. of Pages : 38 No. of Claims : 9

(12) PATENT APPLICATION PUBLICATION
(19) INDIA
(22) Date of filing of Application :29/10/2013
(21) Application No.9336/DELNP/2013 A
(43) Publication Date : 19/12/2014

(54) Title of the invention : PESTICIDAL MIXTURES INCLUDING ISOXAZOLINE DERIVATIVES

(51) International classification :A01N43/80,A01N51/00,A01N53/00
(31) Priority Document No :11168218.3
(32) Priority Date :31/05/2011
(33) Name of priority country :EPO
(86) International Application No :PCT/EP2012/060126
Filing Date :30/05/2012
(87) International Publication No :WO 2012/163960
(61) Patent of Addition to Application Number :NA
Filing Date :NA
(62) Divisional to Application Number :NA
Filing Date :NA

(71)**Name of Applicant :**
1)SYNGENTA PARTICIPATIONS AG
Address of Applicant :Schwarzwaldallee 215 CH 4058 Basel Switzerland
(72)**Name of Inventor :**
1)EL QACEMI Myriem
2)CASSAYRE Jr´me Yves

(57) Abstract :
The present invention relates to pesticidal mixtures comprising a component A and a component B, wherein component A is a compound of formula (I) wherein A 1, A2, L, p, R1, R2, R3, R4 and R5 are as defined in claim 1 and component B is an insecticide. The present invention also relates to methods of using said mixtures for the control of plant pests.

No. of Pages : 55 No. of Claims : 13

(12) PATENT APPLICATION PUBLICATION
(19) INDIA
(22) Date of filing of Application :29/10/2013
(21) Application No.9338/DELNP/2013 A
(43) Publication Date : 19/12/2014

(54) Title of the invention : TRANSFER CUTTING METHOD AND TRANSFER CUTTING DEVICE OF STRIP SHAPED RUBBER MEMBER

(51) International classification :B29D30/38,B65H5/02
(31) Priority Document No :2011102896
(32) Priority Date :02/05/2011
(33) Name of priority country :Japan
(86) International Application No :PCT/JP2012/002955
Filing Date :01/05/2012
(87) International Publication No :WO 2012/150662
(61) Patent of Addition to Application Number :NA
Filing Date :NA
(62) Divisional to Application Number :NA
Filing Date :NA

(71)**Name of Applicant :**
1)BRIDGESTONE CORPORATION
Address of Applicant :10 1 Kyobashi 1 chome Chuo ku Tokyo 1048340 Japan
(72)**Name of Inventor :**
1)KUROKI Yuuzo

(57) Abstract :
At the time of transfer of a strip-shaped rubber member (15) onto a belt conveyor (12) by a transfer unit, support members (61), each of which is provided on one width-direction side of a corresponding belt (51) and is projectable from a conveying surface of the belt (51), are lifted by a lifting/lowering unit (71) to project from the conveying surface of the belts (51), so that the strip-shaped rubber member (15) is raised from the conveying surface of the belts (51). Therefore, the strip-shaped rubber member (15) is not in sliding contact with the conveying surface of the belts (51) at the time of transfer. As a result, a situation whereby the belts (51) are dragged by the strip-shaped rubber member (15) so that one width-direction edge portion thereof is turned up can be prevented.

No. of Pages : 25 No. of Claims : 6

(12) PATENT APPLICATION PUBLICATION
(19) INDIA
(22) Date of filing of Application :29/10/2013
(21) Application No.9339/DELNP/2013 A
(43) Publication Date : 19/12/2014

(54) Title of the invention : METHOD TO PREVENT DEBRIS BUILD UP ON RECIPROCATING AIR MOTOR PILOT VALVES

(51) International classification :F16N13/04,F01M1/02,F16N25/02
(31) Priority Document No :61/479483
(32) Priority Date :27/04/2011
(33) Name of priority country :U.S.A.
(86) International Application No :PCT/US2012/034987
Filing Date :25/04/2012
(87) International Publication No :WO 2012/149013
(61) Patent of Addition to Application Number :NA
Filing Date :NA
(62) Divisional to Application Number :NA
Filing Date :NA

(71)**Name of Applicant :**
1)GRACO MINNESOTA INC.
Address of Applicant :88 11th Avenue Northeast Minneapolis Minnesota 55413 1894 U.S.A.
(72)**Name of Inventor :**
1)BAUCK Mark L.
2)YOU Zaixing
3)WU Xueshui
4)TIAN Jin

(57) Abstract :
An end cap assembly for a reciprocating air motor comprises a pilot valve and an end cap body. The pilot has a valve stem. The end cap body comprises a central bore for receiving an air motor rod a valve bore in which the pilot valve is disposed such that the valve stem extends through the end cap body and an air port extending through the end cap body. The air port has a contour to direct air toward the valve stem.

No. of Pages : 21 No. of Claims : 22

(12) PATENT APPLICATION PUBLICATION
(19) INDIA
(22) Date of filing of Application :28/10/2013
(21) Application No.9294/DELNP/2013 A
(43) Publication Date : 19/12/2014

(54) Title of the invention : WATER PERMEABLE AND WATER ABSORBING ECO PAVEMENT

(51) International classification :E01C7/32
(31) Priority Document No :201110093317.0
(32) Priority Date :14/04/2011
(33) Name of priority country :China
(86) International Application No :PCT/CN2011/001523
Filing Date :08/09/2011
(87) International Publication No :WO 2012/139263
(61) Patent of Addition to Application Number :NA
Filing Date :NA
(62) Divisional to Application Number :NA
Filing Date :NA

(71)**Name of Applicant :**
1)CHEN Jui Wen
Address of Applicant :No.288 48 Zhongzheng Rd. Shulin Dist. New Taipei City
2)CHEN Ting Hao
(72)**Name of Inventor :**
1)CHEN Jui Wen
2)CHEN Ting Hao

(57) Abstract :
Disclosed is a water permeable and water absorbing eco pavement. In the invention hollow bodies (42) provided with multiple through holes (43) are mixed into water permeable material and a pavement layer (40) is laid after mixing the hollow bodies (42) with other pavement materials. The pavement layer (40) can not only be permeated by water but can also absorb and store water quickly thereby reducing the accumulation of surface water and regulating the surface temperature.

No. of Pages : 16 No. of Claims : 8

(12) PATENT APPLICATION PUBLICATION
(19) INDIA
(22) Date of filing of Application :29/10/2013
(21) Application No.9296/DELNP/2013 A
(43) Publication Date : 19/12/2014

(54) Title of the invention : COMPOSITION AND METHOD FOR TREATMENT OF DIABETES

(51) International classification	:A61K31/191,A61K31/195,A61K47/48
(31) Priority Document No	:61/481268
(32) Priority Date	:02/05/2011
(33) Name of priority country	:U.S.A.
(86) International Application No	:PCT/US2012/036077
Filing Date	:02/05/2012
(87) International Publication No	:WO 2012/151252
(61) Patent of Addition to Application Number	:NA
Filing Date	:NA
(62) Divisional to Application Number	:NA
Filing Date	:NA

(71)**Name of Applicant :**
1)BIOKIER INC.
Address of Applicant :105 Green Willow Ct. Chapel Hill NC 27514 U.S.A.
(72)**Name of Inventor :**
1)SZEWCZYK Jerzy Ryszard

(57) Abstract :
The present invention relates to a method of treating diabetes type II by delivery of butyric acid, bile acid, long chain fatty acid or glutamine to the colon by bypassing the upper digestive tract. The composition is combined either by the same or different route of administration with a DPP-IV inhibitor such as vildagliptin.

No. of Pages : 28 No. of Claims : 17

(12) PATENT APPLICATION PUBLICATION
(19) INDIA
(22) Date of filing of Application :29/10/2013
(21) Application No.9299/DELNP/2013 A
(43) Publication Date : 19/12/2014

(54) Title of the invention : REMOTE DATA MONITORING AND COLLECTION SYSTEM WITH MULTI TIERED ANALYSIS

(51) International classification :A61B5/00,G08B21/10,F17D3/01
(31) Priority Document No :61/476072
(32) Priority Date :15/04/2011
(33) Name of priority country :U.S.A.
(86) International Application No :PCT/US2012/033592
Filing Date :13/04/2012
(87) International Publication No :WO 2012/142462
(61) Patent of Addition to Application Number :NA
Filing Date :NA
(62) Divisional to Application Number :NA
Filing Date :NA

(71)**Name of Applicant :**
1)INFOBIONIC INC.
Address of Applicant :M2D2 600 Suffolk Street Lowell MA 01854 U.S.A.
(72)**Name of Inventor :**
1)FAHEY Michael

(57) Abstract :
A system collects and stores data from a source at a high resolution and/or a high data rate(more detailed data) and sends a low resolution and/or downsampled version of the data (less detailed data) to a remote server via a wireless network. The server automatically analyzes the less detailed data to detect an anomaly such as an arrhythmia earthquake or failure of a structural member. A two tiered analysis scheme is used where the first tier is less specific than the second tier. If the first tier analysis detects or suspects the anomaly the server signals the data collector to send more detailed data that corresponds to a time period associated with the anomaly. The more specific second tier analyses the more detailed data to verify the anomaly. The server may also store the received data and make it available to a user such as via a graphical or tabular display.

No. of Pages : 37 No. of Claims : 33

(12) PATENT APPLICATION PUBLICATION
(19) INDIA
(22) Date of filing of Application :30/10/2013
(21) Application No.9360/DELNP/2013 A
(43) Publication Date : 19/12/2014

(54) Title of the invention : COMPOSITIONS AND METHODS FOR THE ALTERATION OF XLHED PHENOTYPES

(51) International classification :C07K16/00,C07K17/00,C07K17/14
(31) Priority Document No :61/485,677
(32) Priority Date :13/05/2011
(33) Name of priority country:U.S.A.
(86) International Application No :PCT/US2012/037251
Filing Date :10/05/2012
(87) International Publication No :WO 2012/158445
(61) Patent of Addition to Application Number :NA
Filing Date :NA
(62) Divisional to Application Number :NA
Filing Date :NA

(71)**Name of Applicant :**
1)EDIMER PHARMACEUTICALS INC.
Address of Applicant :1 Broadway 8th Floor Cambridge MA 02142 U.S.A.
(72)**Name of Inventor :**
1)SCHNEIDER Pascal
2)KOWALCZYK Christine

(57) Abstract :
The invention relates to methods for the temporal administration of EDA agonists, in particular EDI200, which correlate to optimal therapeutic response windows required for the formation of any EDA-dependent structures such as ectodermal appendages. Use of the methods described allow for the design of targeted therapeutic dosing and administration regimens in order to correct or alter abnormal phenotypes associated with genetic disorders, in particular, XLHED.

No. of Pages : 35 No. of Claims : 11

(12) PATENT APPLICATION PUBLICATION
(19) INDIA
(22) Date of filing of Application :30/10/2013
(21) Application No.9361/DELNP/2013 A
(43) Publication Date : 19/12/2014

(54) Title of the invention : RECOVERY OF PHENOL AND ACETONE FROM BISPHENOL A STREAMS

(51) International classification :C07C37/20,C07C37/72,C07C39/16
(31) Priority Document No :13/153909
(32) Priority Date :06/06/2011
(33) Name of priority country :U.S.A.
(86) International Application No :PCT/US2012/040680
Filing Date :04/06/2012
(87) International Publication No :WO 2012/170329
(61) Patent of Addition to Application Number :NA
Filing Date :NA
(62) Divisional to Application Number :NA
Filing Date :NA

(71)**Name of Applicant :**
1)BADGER LICENSING LLC
Address of Applicant :One Financial Center Boston Massachusetts 02111 U.S.A.
(72)**Name of Inventor :**
1)PALMER David
2)EVITT Steven
3)FETSKO Stephen
4)CHI Chung Ming

(57) Abstract :
In a method of recovering phenol and acetone from a feed stream containing bisphenol A and isomers thereof the feed stream is contacted with water and a source of hydroxyl ions under conditions effective to decompose at least part of said bisphenol A and isomers thereof to phenol and acetone. The conditions include a temperature of 150 C to 300 C a pressure sufficient to keep the water substantially in the liquid phase at said temperature and a molar ratio of hydroxyl ions to hydroxyphenyl groups in the residue stream from 0.3:1 to 0.9:1.

No. of Pages : 18 No. of Claims : 11

(12) PATENT APPLICATION PUBLICATION
(19) INDIA
(22) Date of filing of Application :30/10/2013
(21) Application No.9362/DELNP/2013 A
(43) Publication Date : 19/12/2014

(54) Title of the invention : METHOD FOR REMOTELY DETERMINING AN ABSOLUTE AZIMUTH OF A TARGET POINT

(51) International classification :G01C1/04,G01C17/00,G01C1/06
(31) Priority Document No :1101567
(32) Priority Date :20/05/2011
(33) Name of priority country :France
(86) International Application No :PCT/EP2012/059229
Filing Date :18/05/2012
(87) International Publication No :WO 2012/159978
(61) Patent of Addition to Application Number :NA
Filing Date :NA
(62) Divisional to Application Number :NA
Filing Date :NA

(71)**Name of Applicant :**
1)SAGEM DEFENSE SECURITE
Address of Applicant :Le Ponant de Paris 27 rue Leblanc F 75015 PARIS France
(72)**Name of Inventor :**
1)PONSSARD Clment
2)DUCLOS Daniel
3)GAVILLET Simon

(57) Abstract :
The invention relates to a method and system for remotely determining an absolute azimuth of a target point (B) by ground means via the creation of an image bank georeferenced in the absolute azimuth only from a first point (P) and the use of this image bank as an azimuth reference from a second point (P) having a visual environment at least in part the same as the visual environment of the first point (P).

No. of Pages : 29 No. of Claims : 15

(12) PATENT APPLICATION PUBLICATION
(19) INDIA
(22) Date of filing of Application :30/10/2013
(21) Application No.9363/DELNP/2013 A
(43) Publication Date : 19/12/2014

(54) Title of the invention : IMMUNOGLOBULIN REDUCED IN THROMBOGENIC AGENTS AND PREPARATION THEREOF

(51) International classification :C07K1/18,C07K16/06
(31) Priority Document No :212911
(32) Priority Date :16/05/2011
(33) Name of priority country :Israel
(86) International Application No :PCT/IL2012/000189
Filing Date :14/05/2012
(87) International Publication No :WO 2012/156963
(61) Patent of Addition to Application Number :NA
Filing Date :NA
(62) Divisional to Application Number :NA
Filing Date :NA

(71)**Name of Applicant :**
1)OMRIX BIOPHARMACEUTICALS LTD.
Address of Applicant :Bldg. 14 Weizmann Science Park PO Box 619 Rehovot 76106 Israel
(72)**Name of Inventor :**
1)MINTZ Roni
2)BELYAEV Oleg
3)NUR Israel
4)BAR Liliana
5)MEIDLER Roberto

(57) Abstract :
The invention relates to an immunoglobulin composition reduced in thrombogenic agents and to methods for its preparation. One method comprises subjecting an immunoglobulin containing solution to a negative cation exchanger chromatography at a pH in the range of higher than 3.8 to equal to or lower than 5.3. The solution can also be subjected to a negative anion exchanger chromatography at a pH in the range of 7 to 8.2.

No. of Pages : 62 No. of Claims : 53

(12) PATENT APPLICATION PUBLICATION
(19) INDIA
(22) Date of filing of Application :30/10/2013
(21) Application No.9364/DELNP/2013 A
(43) Publication Date : 19/12/2014

(54) Title of the invention : A METHOD FOR ATTACHING AN OPTICAL LENS TO A PRINTED CIRCUIT BOARD WITH ELECTRONIC LIGHT SOURCE

(51) International classification :H01L21/00
(31) Priority Document No :61/486716
(32) Priority Date :16/05/2011
(33) Name of priority country :U.S.A.
(86) International Application No :PCT/US2012/038210
Filing Date :16/05/2012
(87) International Publication No :WO 2012/158841
(61) Patent of Addition to Application Number :NA
Filing Date :NA
(62) Divisional to Application Number :NA
Filing Date :NA

(71)**Name of Applicant :**
1)SHAT R SHIELD INC.
Address of Applicant :116 Ryan Patrick Drive Salisbury NC 28147 U.S.A.
(72)**Name of Inventor :**
1)CATTONI Don
2)HARMAN Jeffery D.

(57) Abstract :
The present invention relates to a LED assembly and method for attaching an optical lens to a printed circuit board having an electronic light source such as an LED or OLED by application of an adhesive comprising silicone or an epoxy and heat curing the adhesive material at a low temperature.

No. of Pages : 27 No. of Claims : 27

(12) PATENT APPLICATION PUBLICATION
(19) INDIA
(22) Date of filing of Application :30/10/2013
(21) Application No.9365/DELNP/2013 A
(43) Publication Date : 19/12/2014

(54) Title of the invention : LIGHT TRAPPING ARCHITECTURE FOR PHOTOVOLTAIC AND PHOTODETECTOR APPLICATIONS

(51) International classification :H01L51/44,G02B5/02
(31) Priority Document No :61/476683
(32) Priority Date :18/04/2011
(33) Name of priority country :U.S.A.
(86) International Application No :PCT/US2011/034971
Filing Date :03/05/2011
(87) International Publication No :WO 2012/145012
(61) Patent of Addition to Application Number :NA
Filing Date :NA
(62) Divisional to Application Number :NA
Filing Date :NA

(71)**Name of Applicant :**
1)THE REGENTS OF THE UNIVERSITY OF MICHIGAN
Address of Applicant :Office of Technology Transfer 1214 South University Avenue 2nd Floor Ann Arbor MI 48104 2592 U.S.A.
(72)**Name of Inventor :**
1)FORREST Stephen R.
2)LUNT Richard R.
3)SLOOTSKY Michael

(57) Abstract :
There is disclosed photovoltaic device structures which trap admitted light and recycle it through the contained photosensitive materials to maximize photoabsorption. For example, there is disclosed a photosensitive optoelectronic device comprising: a first reflective layer comprising a thermoplastic resin; a second reflective layer substantially parallel to the first reflective layer; a first transparent electrode layer on at least one of the first and second reflective layer; and a photosensitive region adjacent to the first electrode, wherein the first transparent electrode layer is substantially parallel to the first reflective layer and adjacent to the photosensitive region, and wherein the device has an exterior face transverse to the planes of the reflective layers where the exterior face has an aperture for admission of incident radiation to the interior of the device.

No. of Pages : 39 No. of Claims : 35

(12) PATENT APPLICATION PUBLICATION
(19) INDIA
(22) Date of filing of Application :30/10/2013
(21) Application No.9366/DELNP/2013 A
(43) Publication Date : 19/12/2014

(54) Title of the invention : IMPACT PAD

(51) International classification :C21C5/44
(31) Priority Document No :61/496974
(32) Priority Date :14/06/2011
(33) Name of priority country :U.S.A.
(86) International Application No :PCT/US2012/033265
Filing Date :12/04/2012
(87) International Publication No :WO 2012/173690
(61) Patent of Addition to Application Number :NA
Filing Date :NA
(62) Divisional to Application Number :NA
Filing Date :NA

(71)**Name of Applicant :**
1)VESUVIUS CRUCIBLE COMPANY
Address of Applicant :103 Foulk Road Suite 202 Wilmington Delaware 19803 U.S.A.
(72)**Name of Inventor :**
1)REINHART Jeffrey R.

(57) Abstract :
A tundish impact pad formed from refractory material comprises a base having an impact surface which in use faces upwardly against a stream of molten metal entering a tundish and a wall extending upwardly from the base around at least a part of the periphery of the impact surface. The wall has at least one latitudinal portion. An inwardly extending feature protrudes from the latitudinal wall. The inwardly extending feature inhibits flow exiting the impact pad from passing over the center of the latitudinal portion of the wall.

No. of Pages : 23 No. of Claims : 20

(12) PATENT APPLICATION PUBLICATION
(19) INDIA
(22) Date of filing of Application :30/10/2013
(21) Application No.9367/DELNP/2013 A
(43) Publication Date : 19/12/2014

(54) Title of the invention : VACUUM DEGASSING TANK AND METHOD FOR DEGASSING USING SAME

(51) International classification :C04B35/043,C21C7/10,F27D1/00
(31) Priority Document No :NA
(32) Priority Date :NA
(33) Name of priority country :NA
(86) International Application No :PCT/JP2011/060278
Filing Date :27/04/2011
(87) International Publication No :WO 2012/147180
(61) Patent of Addition to Application Number :NA
Filing Date :NA
(62) Divisional to Application Number :NA
Filing Date :NA

(71)**Name of Applicant :**
1)NIPPON STEEL & SUMITOMO METAL CORPORATION
Address of Applicant :6 1 Marunouchi 2 chome Chiyoda ku Tokyo 1008071 Japan
(72)**Name of Inventor :**
1)YAMAMOTO Masaaki
2)TAKEUCHI Hironori
3)TAKI Norio
4)TAMURA Yoshihiro
5)TAKEUCHI Tomohide

(57) Abstract :
A vacuum degassing tank includes a carbon-containing magnesia refractory material provided at least at a contact part of a refractory material which comes into contact with a molten slag, the carbon-containing magnesia refractory material contains 7 mass% or higher and less than 28 mass% of graphite, 3.5 mass% or higher and 14 mass% or less of an Al-Mg alloy, and magnesia and unavoidable impurities as the remainder, and a mass ratio obtained by dividing a mass of the Al-Mg alloy by a mass of the graphite is 0.5 or higher and 2.0 or less.

No. of Pages : 28 No. of Claims : 4

(12) PATENT APPLICATION PUBLICATION
(19) INDIA
(22) Date of filing of Application :28/10/2013
(21) Application No.9248/DELNP/2013 A
(43) Publication Date : 19/12/2014

(54) Title of the invention : VALVE DEVICE FOR AN INTERNAL COMBUSTION ENGINE

(51) International classification :F02M25/07,F16K11/044
(31) Priority Document No :10 2011 050 263.7
(32) Priority Date :11/05/2011
(33) Name of priority country :Germany
(86) International Application No :PCT/EP2012/057777
Filing Date :27/04/2012
(87) International Publication No :WO 2012/152601
(61) Patent of Addition to Application Number :NA
Filing Date :NA
(62) Divisional to Application Number :NA
Filing Date :NA

(71)**Name of Applicant :**
1)PIERBURG GMBH
Address of Applicant :Alfred Pierburg Strae 1 41460 Neuss Germany
2)VOLKSWAGEN AKTIENGESELLSCHAFT
(72)**Name of Inventor :**
1)VITT Stefan
2)SARI Osman
3)WAGNER Michael
4)HOMEYER Bernd

(57) Abstract :
Valve devices for Internal combustion engines are known which comprise a housing (2) with at least one inlet (4, 6) and one outlet (8) formed therein, at least one passage opening (10, 12) via which the at least one inlet (4, 6) can be fluidically connected to the at least one outlet (8), at least one valveclosing member (18, 20) by means of which the passage opening (10, 12) can be controlled, a valve rod (22) which can be translationally moved by means of an actuator (56) and on which the at least one valve-closing member (18, 20) is arranged, a spring (32) that surrounds the valve rod (22) and is supported with its first end against the one valve-closing member (18) and with its opposite end against a stop element (20), and an element that substantially surrounds said spring (32). The functionality of these devices is often limited owing to high thermal loads and high sensitivity to particles of dirt. It is therefore suggested that said element should be substantially formed from two radially dosed lateral surfaces (46, 48) that are in mutual engagement, the first lateral surface (46) lying against the at least one valveclosing member (18) and being able to be moved therewith, and the second lying against the stop element (20), said valve-closing member (18) being moveable relative to said stop element (20).

No. of Pages : 15 No. of Claims : 12

(12) PATENT APPLICATION PUBLICATION
(19) INDIA
(22) Date of filing of Application :28/03/2013
(21) Application No.925/DEL/2013 A
(43) Publication Date : 19/12/2014

(54) Title of the invention : A NOVEL COOLING FAN FOR ENGINE OF AUTOMOBILE

(51) International classification :B60H
(31) Priority Document No :NA
(32) Priority Date :NA
(33) Name of priority country :NA
(86) International Application No :NA
Filing Date :NA
(87) International Publication No : NA
(61) Patent of Addition to Application Number :NA
Filing Date :NA
(62) Divisional to Application Number :NA
Filing Date :NA

(71)**Name of Applicant :**
1)MARUTI SUZUKI INDIA LIMITED
Address of Applicant :1 NELSON MANDELA ROAD, VASANT KUNJ, NEW DELHI-110070, INDIA Delhi India
(72)**Name of Inventor :**
1)PIYUSH AGARWAL
2)UTTAM MISHRA
3)ANSHUL KHATRI
4)RAVI SHASTRI
5)TAPABRATA DAS
6)NA
7)SUBHAJIT DAS

(57) Abstract :
A novel cooling fan for engine of automobile This invention relates to a novel cooling fan for engine of automobile comprising of a shroud mounted with fan for engine, wherein a shroud extension is integrally provided with rim of fan mounting. The invention does not require mud flap unlike prior art.

No. of Pages : 9 No. of Claims : 5

(12) PATENT APPLICATION PUBLICATION
(19) INDIA
(22) Date of filing of Application :28/10/2013
(21) Application No.9250/DELNP/2013 A
(43) Publication Date : 19/12/2014

(54) Title of the invention : A PROCESS FOR EXTRACTION OF PEPTIDES AND ITS APPLICATION IN LIQUID PHASE PEPTIDE SYNTHESIS

(51) International classification :C07K1/02,C07K1/14
(31) Priority Document No :11170094.4
(32) Priority Date :16/06/2011
(33) Name of priority country :EPO
(86) International Application No :PCT/EP2012/061250
Filing Date :14/06/2012
(87) International Publication No :WO 2012/171982
(61) Patent of Addition to Application Number :NA
Filing Date :NA
(62) Divisional to Application Number :NA
Filing Date :NA

(71)**Name of Applicant :**
1)LONZA LTD
Address of Applicant :Lonzastrasse CH 3930 Visp Switzerland
2)LONZA BRAINE S.A.
(72)**Name of Inventor :**
1)MONNAIE Didier
2)FORNI Luciano
3)GIRAUD Mathieu

(57) Abstract :
The present invention relates to a process for extraction of a peptide from a reaction mixture resulting from a peptide coupling reaction, the reaction mixture containing the peptide and a polar aprotic solvent selected from the group consisting of N,N-dimethylformamide, A/,A/-dimethylacetamide and A/-methyl-2-pyrrolidone, whereby the process comprises a step a) and a step b): step a) comprises the addition of a component al) and a component a2), whereby component al) is 2-methyltetrahydrofuran and component a2) is water, to the reaction mixture, so that a biphasic system with an organic layer and an aqueous layer is obtained; step b) comprises the subsequent separation of the organic layer containing the peptide from the aqueous layer. In a particularly preferred embodiment of the present invention, a combination of 2- methyltetrahydrofuran and an organic solvent 1 selected from the group consisting of n-heptane, toluene, ethylacetate, isopropylacetate, acetonitrile and tetrahydrofuran is used for the process for extraction. The extraction step is preferably used in a process for preparation of a peptide in liquid phase.

No. of Pages : 100 No. of Claims : 16

(12) PATENT APPLICATION PUBLICATION
(19) INDIA
(22) Date of filing of Application :30/10/2013
(21) Application No.9373/DELNP/2013 A
(43) Publication Date : 19/12/2014

(54) Title of the invention : SELECTIVE HYDROGENATION APPARATUS FOR BIOLOGICALLY APPLICABLE LIQUID

(51) International classification :C02F1/68,B01F1/00,B01F5/06
(31) Priority Document No :2011156952
(32) Priority Date :15/07/2011
(33) Name of priority country :Japan
(86) International Application No :PCT/JP2012/061759
Filing Date :08/05/2012
(87) International Publication No :WO 2013/011732
(61) Patent of Addition to Application Number :NA
Filing Date :NA
(62) Divisional to Application Number :NA
Filing Date :NA

(71)**Name of Applicant :**
1)MIZ Co. LTD.
Address of Applicant :16 5 Zengyo 1 chome Fujisawa shi Kanagawa 2510871 Japan
(72)**Name of Inventor :**
1)SATOH Fumitake
2)SEO Tomoki
3)KUROKAWA Ryousuke
4)SATOH Bunpei

(57) Abstract :
To provide a selective hydrogenation apparatus with which a hydrogen containing biologically applicable liquid can be obtained without changing the properties of a biologically applicable liquid. [Solution] A hydrogen generating system comprising a hydrogen generating agent as an essential component is accommodated in a hydrogen bubble forming unit that has a gas liquid separation section containing a gas permeable membrane or an openable valve and hydrogen gas generated in the hydrogen bubble forming unit by reacting the hydrogen generating system and water for generation in the hydrogen bubble forming unit is fed to a biologically applicable liquid through the gas liquid separation section whereby a hydrogen containing biologically applicable liquid is obtained.

No. of Pages : 49 No. of Claims : 6

(12) PATENT APPLICATION PUBLICATION
(19) INDIA
(22) Date of filing of Application :28/10/2013
(21) Application No.9257/DELNP/2013 A
(43) Publication Date : 19/12/2014

(54) Title of the invention : METHOD OF MANUFACTURING AN AEROSOL DISPENSER

(51) International classification :B65D83/62
(31) Priority Document No :13/108238
(32) Priority Date :16/05/2011
(33) Name of priority country :U.S.A.
(86) International Application No :PCT/US2012/038020
Filing Date :16/05/2012
(87) International Publication No :WO 2012/158731
(61) Patent of Addition to Application Number :NA
Filing Date :NA
(62) Divisional to Application Number :NA
Filing Date :NA

(71)**Name of Applicant :**
1)THE PROCTER & GAMBLE COMPANY
Address of Applicant :One Procter & Gamble Plaza Cincinnati Ohio 45202 U.S.A.
(72)**Name of Inventor :**
1)SMITH Scott Edward

(57) Abstract :
A method of manufacturing an aerosol dispenser (20). The method comprises making part of the dispenser (20) having an outer container (22) at a first location and sealing that container (22). The sealed container may be charged with propellant. The sealed container (22) may then be shipped to a second location to add product (4) and complete manufacture.

No. of Pages : 32 No. of Claims : 13

(12) PATENT APPLICATION PUBLICATION
(19) INDIA
(22) Date of filing of Application :28/10/2013
(21) Application No.9258/DELNP/2013 A
(43) Publication Date : 19/12/2014

(54) Title of the invention : THERMALLY ACTIVATED HIGH TEMPERATURE CEMENT SUSPENDING AGENT

(51) International classification :C09K8/035,C09K8/467,C04B16/04
(31) Priority Document No :13/101413
(32) Priority Date :05/05/2011
(33) Name of priority country :U.S.A.
(86) International Application No :PCT/GB2012/000399
Filing Date :02/05/2012
(87) International Publication No :WO 2012/150431
(61) Patent of Addition to Application Number :NA
Filing Date :NA
(62) Divisional to Application Number :NA
Filing Date :NA

(71)**Name of Applicant :**
1)HALLIBURTON ENERGY SERVICES INC.
Address of Applicant :10200 Bellaire Boulevard Houston TX 77072 U.S.A.
(72)**Name of Inventor :**
1)FUNKHOUSER Gary P.
2)KELLUM Matthew

(57) Abstract :
The present invention relates to methods of providing a cementing fluid comprising an aqueous liquid, a hydraulic cement, and a cement suspending agent that comprises a crosslinked particulate formed by a reaction comprising a first monofunctional monomer, a primary crosslinker, and a secondary crosslinker; placing the cementing fluid in a wellbore penetrating a subterranean formation; and allowing the cementing fluid to set therein.

No. of Pages : 28 No. of Claims : 20

(12) PATENT APPLICATION PUBLICATION
(19) INDIA
(22) Date of filing of Application :30/10/2013
(21) Application No.9380/DELNP/2013 A
(43) Publication Date : 19/12/2014

(54) Title of the invention : BIOMEDICAL HAEMOSTATIC POWDER DISPENSER

(51) International classification :A61B17/00,A61M5/30,B05C17/005
(31) Priority Document No :11163820.1
(32) Priority Date :27/04/2011
(33) Name of priority country :EPO
(86) International Application No :PCT/EP2012/057641
Filing Date :26/04/2012
(87) International Publication No :WO 2012/146652
(61) Patent of Addition to Application Number :NA
Filing Date :NA
(62) Divisional to Application Number :NA
Filing Date :NA

(71)**Name of Applicant :**
1)BIOMUP
Address of Applicant :8 alle Ir¨ne Joliot Curie F 69800 Saint Priest France
(72)**Name of Inventor :**
1)FOSTER Clark
2)MISHELEVICH David
3)WARNER Eric
4)GIFFORD Aaron

(57) Abstract :
A biomedical haemostatic powder dispenser (1) by which individual doses of powdered medication that are stored in respective chambers of a rotatable carousel (22) are fluidized for delivery to a targeted treatment site (e.g. a wound in order to stop bleeding). In particular a squeeze handle (7) is activated (i.e. depressed) so as to cause a blast of gas under pressure to be applied from a gas reservoir (30) to a particular one of the powder filled chambers of the medication carousel so that a single measured does of medication is entrained and delivered to the patient. At the same time that the squeeze handle is activated the medication carousel is rotated so that a different powder filled chamber is moved within a fluid path between the gas reservoir and an outlet nozzle tube (10) of the dispenser and a kit for dispensing a powder.

No. of Pages : 38 No. of Claims : 20

(12) PATENT APPLICATION PUBLICATION
(19) INDIA
(22) Date of filing of Application :30/10/2013
(21) Application No.9381/DELNP/2013 A
(43) Publication Date : 19/12/2014

(54) Title of the invention : SHORT ACTING DIHYDROPYRIDINES (CLEVIDIPINE) FOR USE IN REDUCING STROKE DAMAGE

(51) International classification :A61K31/4418,A61K9/107
(31) Priority Document No :61/470780
(32) Priority Date :01/04/2011
(33) Name of priority country :U.S.A.
(86) International Application No :PCT/US2012/031449
Filing Date :30/03/2012
(87) International Publication No :WO 2012/135617
(61) Patent of Addition to Application Number :NA
Filing Date :NA
(62) Divisional to Application Number :NA
Filing Date :NA

(71)**Name of Applicant :**
1)THE MEDICINES COMPANY
Address of Applicant :8 Sylvan Way Parsippany NJ 07054 U.S.A.
(72)**Name of Inventor :**
1)WILLIAMS Gregory Charles

(57) Abstract :
The present invention relates to methods for lowering stroke damages and/or lowering blood pressure in a subject with a stroke in need thereof, comprising administering to the subject an effective amount of a pharmaceutical composition comprising a short acting dihydropyridine compound, preferably clevidipine or a pharmaceutically acceptable salt or ester thereof. Also provided are related medicaments, pharmaceutical compositions, and methods for preparing the medicaments.

No. of Pages : 19 No. of Claims : 20

(12) PATENT APPLICATION PUBLICATION
(19) INDIA
(22) Date of filing of Application :30/10/2013
(21) Application No.9384/DELNP/2013 A
(43) Publication Date : 19/12/2014

(54) Title of the invention : ACCESS PERMISSIONS MANAGEMENT SYSTEM AND METHOD

(51) International classification :G06F17/30
(31) Priority Document No :61/477662
(32) Priority Date :21/04/2011
(33) Name of priority country :U.S.A.
(86) International Application No :PCT/IL2012/000163
Filing Date :18/04/2012
(87) International Publication No :WO 2012/143920
(61) Patent of Addition to Application Number :NA
Filing Date :NA
(62) Divisional to Application Number :NA
Filing Date :NA

(71)**Name of Applicant :**
1)VARONIS SYSTEMS INC.
Address of Applicant :1250 Broadway 31st Floor New York New York 10001 U.S.A.
(72)**Name of Inventor :**
1)FAITELSON Yakov
2)KORKUS Ohad
3)KRETZER KATZIR Ophir
4)KEYSAR Yzhar

(57) Abstract :
An access permissions management system including a hierarchical access permissions repository including access permissions relating to data elements arranged in a data element hierarchy wherein some of the data elements have only access permissions which are inherited from ancestral data elements some of the multiplicity of data elements are prevented from having inherited access permissions and thus have only unique access permissions which are not inherited and some of the data elements are not prevented from having inherited access permissions and have not only inherited access permissions but also unique access permissions which are not inherited some of which unique access permissions possibly being redundant with inherited access permissions and an access permissions redundancy prevention engine operative to ascertain which of the unique access permissions are redundant with inherited access permissions and not to store the unique access permissions which are redundant with inherited access permissions in the repository.

No. of Pages : 16 No. of Claims : 4

(12) PATENT APPLICATION PUBLICATION
(19) INDIA
(22) Date of filing of Application :28/10/2013
(21) Application No.9279/DELNP/2013 A
(43) Publication Date : 19/12/2014

(54) Title of the invention : PALATABILITY ENHANCING COMPOSITIONS

(51) International classification :A23D7/00
(31) Priority Document No :61/518081
(32) Priority Date :29/04/2011
(33) Name of priority country :U.S.A.
(86) International Application No :PCT/US2012/034198
Filing Date :19/04/2012
(87) International Publication No :WO 2012/148769
(61) Patent of Addition to Application Number :NA
Filing Date :NA
(62) Divisional to Application Number :NA
Filing Date :NA

(71)**Name of Applicant :**
1)NESTEC S.A.
Address of Applicant :Avenue Nestle 55 CH 1800 Vevey Switzerland
(72)**Name of Inventor :**
1)SHE Manjuan Jenny
2)WOODWARD Gary J.
3)LYN Sandra
4)SHI Zulin

(57) Abstract :
The invention provides palatability enhancing compositions comprising a palatability enhancing amount of two or more of tetrasodium pyrophosphate one or more animal by products and one or more microbial proteins and comestible compositions comprising one or more comestible ingredients and the palatability enhancing compositions.

No. of Pages : 21 No. of Claims : 56

(12) PATENT APPLICATION PUBLICATION
(19) INDIA
(22) Date of filing of Application :28/10/2013
(21) Application No.9280/DELNP/2013 A
(43) Publication Date : 19/12/2014

(54) Title of the invention : METHODS PROVIDING PUBLIC REACHABILITY AND RELATED SYSTEMS AND DEVICES

(51) International classification :H04L29/12,H04L29/06
(31) Priority Document No :61/482684
(32) Priority Date :05/05/2011
(33) Name of priority country :U.S.A.
(86) International Application No :PCT/IB2012/051439
Filing Date :26/03/2012
(87) International Publication No :WO 2012/150512
(61) Patent of Addition to Application Number :NA
Filing Date :NA
(62) Divisional to Application Number :NA
Filing Date :NA

(71)**Name of Applicant :**
1)TELEFONAKTIEBOLAGET L M ERICSSON (PUBL)
Address of Applicant :S 164 83 Stockholm Sweden
(72)**Name of Inventor :**
1)MUHANNA Ahmad
2)QIANG Zu
3)ROELAND Dinand

(57) Abstract :
A method of obtaining addressing information may include establishing a communication path through a network between first and second peer devices with a router coupled between the first peer device and the communication path through the network. A communication may he received at the first peer device from the second peer device through the communication path and the router. Moreover a payload of the communication received at the first peer device from the second peer device may include a public reachability address used by the second peer device to transmit the communication through the network and the router to the first peer device. Related methods of f providing such addressing information and related devices are also discussed.

No. of Pages : 48 No. of Claims : 24

(12) PATENT APPLICATION PUBLICATION
(19) INDIA
(22) Date of filing of Application :28/10/2013
(21) Application No.9281/DELNP/2013 A
(43) Publication Date : 19/12/2014

(54) Title of the invention : TRANSPARENT SUBSTRATE CLAD WITH A STACK OF MINERAL LAYERS ONE OF WHICH IS POROUS AND COVERED

(51) International classification :G02B1/10
(31) Priority Document No :1153856
(32) Priority Date :05/05/2011
(33) Name of priority country :France
(86) International Application No :PCT/FR2012/050965
Filing Date :30/04/2012
(87) International Publication No :WO 2012/150410
(61) Patent of Addition to Application Number :NA
Filing Date :NA
(62) Divisional to Application Number :NA
Filing Date :NA

(71)**Name of Applicant :**
1)SAINT GOBAIN GLASS FRANCE
Address of Applicant :18 avenue dAlsace F 92400 Courbevoie France
(72)**Name of Inventor :**
1)GUILLEMOT Fran§ois

(57) Abstract :
The invention deals with a transparent substrate clad with a stack of layers comprising one or more essentially mineral layer(s) exhibiting a nonzero volume fraction of at most 74 % of pores of 30 to 100 nm and a minimum thickness of at least the dimension of the largest pores that it contains and as appropriate one or more essentially mineral dense layer(s) of thickness(es) at most equal to 400 nm on condition that two dense layers such as these are not neighbours and that at least one porous layer is covered by at least one other layer; and with a method of preparing this substrate by liquid route implementing a structuring latex.

No. of Pages : 15 No. of Claims : 9

(12) PATENT APPLICATION PUBLICATION
(19) INDIA
(22) Date of filing of Application :28/10/2013
(21) Application No.9282/DELNP/2013 A
(43) Publication Date : 19/12/2014

(54) Title of the invention : PREVENTING NEIGHBOR DISCOVERY BASED DENIAL OF SERVICE ATTACKS

(51) International classification :H04L29/06
(31) Priority Document No :13/165348
(32) Priority Date :21/06/2011
(33) Name of priority country :U.S.A.
(86) International Application No :PCT/IB2012/052859
Filing Date :06/06/2012
(87) International Publication No :WO 2012/176087
(61) Patent of Addition to Application Number :NA
Filing Date :NA
(62) Divisional to Application Number :NA
Filing Date :NA

(71)**Name of Applicant :**
1)TELEFONAKTIEBOLAGET L M ERICSSON (PUBL)
Address of Applicant :S 164 83 Stockholm Sweden
(72)**Name of Inventor :**
1)HALPERN Joel

(57) Abstract :
A method is provided for preventing denial of service attacks on hosts (120) attached to a subnet (150) where the attacks are initiated by a remote node (139) over an external network (160). The method is performed by a router (110) which forwards packets between the external network (160) and the subnet (150). The router (110) receives a packet for forwarding to a destination address in an address space of the subnet (150) according to the IPv6 protocol and looks up the destination address in a Neighbor Discovery ND table (170). The ND table (170) is populated by operations on the subnet (150) that were completed prior to receipt of the packet. Entries in the ND table (170) store address information of the hosts (120) that have been verified by the router (110) to be active. The router (110) forwards the packet to the destination address if the destination address is stored in the ND table (170). Otherwise the packet is discarded.

No. of Pages : 25 No. of Claims : 16

(12) PATENT APPLICATION PUBLICATION
(19) INDIA
(22) Date of filing of Application :28/10/2013
(21) Application No.9283/DELNP/2013 A
(43) Publication Date : 19/12/2014

(54) Title of the invention : EXTRACELLULAR MATRIX MATERIAL CONDUITS AND METHODS OF MAKING AND USING SAME

(51) International classification :A61K38/18,A61L2/20,B82Y5/00
(31) Priority Document No :61/490873
(32) Priority Date :27/05/2011
(33) Name of priority country :U.S.A.
(86) International Application No :PCT/US2012/039450
Filing Date :24/05/2012
(87) International Publication No :WO 2012/166554
(61) Patent of Addition to Application Number :NA
Filing Date :NA
(62) Divisional to Application Number :NA
Filing Date :NA

(71)**Name of Applicant :**
1)CORMATRIX CARDIOVASCULAR INC.
Address of Applicant :286 South Main Street Suite 200 Alpharetta GA 30009 U.S.A.
(72)**Name of Inventor :**
1)MATHENY Robert G.

(57) Abstract :
Extracellular matrix (ECM) material conduits are disclosed. Methods for regenerating atrioventricular valves to replace defective atrioventricular valves within a heart of a subject using the ECM material conduits are also disclosed. Methods of sterilizing and decellularizing an ECM material are also disclosed.

No. of Pages : 63 No. of Claims : 29

(12) PATENT APPLICATION PUBLICATION
(19) INDIA
(22) Date of filing of Application :29/10/2013
(21) Application No.9353/DELNP/2013 A
(43) Publication Date : 19/12/2014

(54) Title of the invention : EAR SCAFFOLD

(51) International classification :A61F2/18,A61F11/00
(31) Priority Document No :GB1105744.5
(32) Priority Date :05/04/2011
(33) Name of priority country :U.K.
(86) International Application No :PCT/GB2012/000282
Filing Date :28/03/2012
(87) International Publication No :WO 2012/136950
(61) Patent of Addition to Application Number :NA
Filing Date :NA
(62) Divisional to Application Number :NA
Filing Date :NA

(71)**Name of Applicant :**
1)NORTHWOOD MEDICAL INNOVATION LIMITED
Address of Applicant :Lawford House Albert Place London N3 1QA U.K.
(72)**Name of Inventor :**
1)KANG Norbert
2)HAINES Marie Claire

(57) Abstract :
A scaffold (6) for reshaping the cartilaginous portion of an ear. The scaffold is formed of shape memory material and in the form of a horseshoe shape or is formed from a thermoplastic pliable material.

No. of Pages : 32 No. of Claims : 16

(12) PATENT APPLICATION PUBLICATION
(19) INDIA
(22) Date of filing of Application :30/10/2013
(21) Application No.9388/DELNP/2013 A
(43) Publication Date : 19/12/2014

(54) Title of the invention : METHOD FOR CONTROLLING A LASER CUTTING PROCESS AND LASER CUTTING SYSTEM IMPLEMENTING THE SAME

(51) International classification :B23K26/38,B23K26/03
(31) Priority Document No :TO2011A000352
(32) Priority Date :21/04/2011
(33) Name of priority country :Italy
(86) International Application No :PCT/IB2012/051992
Filing Date :20/04/2012
(87) International Publication No :WO 2012/143899
(61) Patent of Addition to Application Number :NA
Filing Date :NA
(62) Divisional to Application Number :NA
Filing Date :NA

(71)**Name of Applicant :**
1)ADIGE S.p.A.
Address of Applicant :Via per Barco 11 I 38056 LEVICO TERME (Trento) Italy
(72)**Name of Inventor :**
1)SBETTI Maurizio
2)BERTOLDI Stefano
3)COLOMBO Daniele
4)PREVITALI Barbara
5)RIVA Giovanni
6)DANESI Matteo
7)MOLINARI TOSATTI Lorenzo
8)PARAZZOLI Diego

(57) Abstract :
According to the invention a laser cutting process is controlled using as reference signal one or more emission lines which are characteristic of the radiation emitted by a gas (be it an assisting gas or a contaminant gas) or more generally by an emitting element present in the volume irradiated by the laser beam focussed by a laser head (12) and adjusting on the base of this reference signal at least one of the following process control parameters: the power of the laser the frequency and the duty cycle of the laser pulse the pressure of an assisting gas emitted by a nozzle (16) forming part of the laser head (12) the relative speed of the laser head (12) with respect to the workpiece (P) the distance between the laser head (12) and the surface (S) of the workpiece (P) and the distance between the focal point (F) of the laser beam and the surface (S) of the workpiece (P).

No. of Pages : 29 No. of Claims : 12

(12) PATENT APPLICATION PUBLICATION
(19) INDIA
(22) Date of filing of Application :30/10/2013
(21) Application No.9389/DELNP/2013 A
(43) Publication Date : 19/12/2014

(54) Title of the invention : PROCESS TO PRODUCE A YEAST DERIVED PRODUCT COMPRISING REDUCING SUGAR

(51) International classification :A23L1/227,A23L1/23,A23L1/231
(31) Priority Document No :11168283.7
(32) Priority Date :31/05/2011
(33) Name of priority country :EPO
(86) International Application No :PCT/EP2012/058982
Filing Date :15/05/2012
(87) International Publication No :WO 2012/163668
(61) Patent of Addition to Application Number :NA
Filing Date :NA
(62) Divisional to Application Number :NA
Filing Date :NA

(71)**Name of Applicant :**
1)DSM IP ASSETS B.V.
Address of Applicant :Het Overloon 1 NL 6411 TE Heerlen Netherlands
(72)**Name of Inventor :**
1)NOORDAM Bertus
2)LANKHORST Peter Philip

(57) Abstract :
This invention relates to a process to produce a yeast derived product as well as a yeast autolysate or yeast extract comprising at least 1% w/w reducing sugar based on the total dry matter weight of the yeast extract or yeast autolysate. The invention also relates to a process to produce a reaction flavour. The yeast extract or yeast autolysate is very suitable for the production of a reaction flavour.

No. of Pages : 20 No. of Claims : 20

(12) PATENT APPLICATION PUBLICATION
(19) INDIA
(22) Date of filing of Application :30/10/2013
(21) Application No.9390/DELNP/2013 A
(43) Publication Date : 19/12/2014

(54) Title of the invention : ENGAGEMENT CHAIN UNIT

(51) International classification :F16H19/02,B66F7/12,F16G13/20
(31) Priority Document No :2011107548
(32) Priority Date :12/05/2011
(33) Name of priority country :Japan
(86) International Application No :PCT/JP2012/061567
Filing Date :01/05/2012
(87) International Publication No :WO 2012/153680
(61) Patent of Addition to Application Number :NA
Filing Date :NA
(62) Divisional to Application Number :NA
Filing Date :NA

(71)**Name of Applicant :**
1)TSUBAKIMOTO CHAIN CO.
Address of Applicant :3 3 Nakanoshima 3 chome Kita ku Osaka shi Osaka 5300005 Japan
(72)**Name of Inventor :**
1)SAJI Tomoyuki
2)MURAKAMI Keisuke

(57) Abstract :
Provided is an interlocking chain unit that has reliable and strong interlocking and avoids buckling, breaking, and bending of a rigidified chain portion. In the interlocking chain unit (100), the interlocking operation of an outer tooth link plate (112BZ) and an outer tooth link plate (112AY) that are just about to complete the interlocking operation is completed in a manner that causes a first interpin distance (dl) and a second inter-pin distance (d2) become substantially equal to each other, and causes a third interpin distance (d3) to approach the second inter-pin distance (d2) .

No. of Pages : 51 No. of Claims : 7

(12) PATENT APPLICATION PUBLICATION
(19) INDIA
(22) Date of filing of Application :30/10/2013
(21) Application No.9391/DELNP/2013 A
(43) Publication Date : 19/12/2014

(54) Title of the invention : A METHOD FOR CODING A SEQUENCE OF DIGITAL IMAGES

(51) International classification :H04N7/26,G06T7/20
(31) Priority Document No :11175227.5
(32) Priority Date :25/07/2011
(33) Name of priority country :EPO
(86) International Application No :PCT/EP2012/063548
Filing Date :11/07/2012
(87) International Publication No :WO 2013/013977
(61) Patent of Addition to Application Number :NA
Filing Date :NA
(62) Divisional to Application Number :NA
Filing Date :NA

(71)**Name of Applicant :**
1)SIEMENS AKTIENGESELLSCHAFT
Address of Applicant :Wittelsbacherplatz 2 80333 M¼nchen Germany
(72)**Name of Inventor :**
1)WEINLICH Andreas
2)AMON Peter
3)HUTTER Andreas
4)KAUP Andr

(57) Abstract :
The invention refers to a method for coding a sequence of digital images (S) each image having the same image format and comprising a number of pixels with assigned pixel values wherein motion parameters (MP) between first and second images (II 12) are determined where based on said motion pa rameters (MP) a motion compensation (MC) is performed for coding the sequence of images (S) where said motion parameters (MP) are included in the coded sequence of images (CS). The motion parameters (MP) between a first image (I1) and a second image (I2) comprise a scalar field (p) having scalar values for a plurality of image positions in the image format wherein the scalar field (p) is determined such that gradient vectors (MV) derived from the scalar field (p) correspond to motion vectors for the motion compensation (MC).

No. of Pages : 28 No. of Claims : 17

(12) PATENT APPLICATION PUBLICATION
(19) INDIA
(22) Date of filing of Application :29/10/2013
(21) Application No.9313/DELNP/2013 A
(43) Publication Date : 19/12/2014

(54) Title of the invention : DEVICE FOR PACKAGING A VISCOUS PRODUCT AND METHOD OF IMPLEMENTING SAME

(51) International classification :B65D83/00
(31) Priority Document No :1152923
(32) Priority Date :05/04/2011
(33) Name of priority country :France
(86) International Application No :PCT/FR2012/050731
Filing Date :04/04/2012
(87) International Publication No :WO 2012/136932
(61) Patent of Addition to Application Number :NA
Filing Date :NA
(62) Divisional to Application Number :NA
Filing Date :NA

(71)**Name of Applicant :**
1)PUMPART SYSTEM
Address of Applicant :5 rue Marcel Allegot F 92190 Meudon France
(72)**Name of Inventor :**
1)BOUMNSO Jr´me
2)SUTTY Xavier

(57) Abstract :
The external casing 1 has a set of air inlet orifices in a rgion 6. The skirt 12 of the internai pouch 8, between its line 11 for securing to the external casing 1 and its open end 10, forms a valve for closing the set of orifices in the event of manual pr¨ssure on the external casing 1.

No. of Pages : 17 No. of Claims : 12

(12) PATENT APPLICATION PUBLICATION
(19) INDIA
(22) Date of filing of Application :29/10/2013
(21) Application No.9314/DELNP/2013 A
(43) Publication Date : 19/12/2014

(54) Title of the invention : FORCE TRANSMISSION BELT IN PARTICULAR V RIBBED BELT

(51) International classification :F16G5/08,F16G5/20,D02G3/32
(31) Priority Document No :11174889.3
(32) Priority Date :21/07/2011
(33) Name of priority country :EPO
(86) International Application No :PCT/EP2012/061421
Filing Date :15/06/2012
(87) International Publication No :WO 2013/010734
(61) Patent of Addition to Application Number :NA
Filing Date :NA
(62) Divisional to Application Number :NA
Filing Date :NA

(71)**Name of Applicant :**
1)CONTITECH ANTRIEBSSYSTEME GMBH
Address of Applicant :Vahrenwalder Str. 9 30165 Hannover Germany
(72)**Name of Inventor :**
1)BALTES Thomas
2)TEVES Reinhard
3)MAHNKEN Claus L¼der
4)KANZOW Henning
5)GREINER Christian

(57) Abstract :
The invention relates to a force transmission belt (10) having an elastic main body, comprising a cover layer (11) as the back of the belt and a carcass (13) having a force transmission zone (14), wherein at least one cover layer (11) is covered with at least one textile material consisting of warp and weft, and wherein the weft and/or the warp contain at least one elastic thread as the core yarn, staple fibers being spun around said thread, and wherein the elastic thread is parallel to the running direction as the core yarn.

No. of Pages : 16 No. of Claims : 7

(12) PATENT APPLICATION PUBLICATION
(19) INDIA
(22) Date of filing of Application :29/10/2013
(21) Application No.9316/DELNP/2013 A
(43) Publication Date : 19/12/2014

(54) Title of the invention : VEHICLE SEAT IN PARTICULAR AUTOMOBILE SEAT

(51) International classification :B60N2/07,B60N2/08
(31) Priority Document No :10 2011 108 652.1
(32) Priority Date :25/07/2011
(33) Name of priority country :Germany
(86) International Application No :PCT/EP2012/002767
Filing Date :29/06/2012
(87) International Publication No :WO 2013/013757
(61) Patent of Addition to Application Number :NA
Filing Date :NA
(62) Divisional to Application Number :NA
Filing Date :NA

(71)**Name of Applicant :**
1)KEIPER GmbH & Co. KG
Address of Applicant :Hertelsbrunnenring 2 67657 Kaiserslautern Germany
(72)**Name of Inventor :**
1)KRAMM Lars
2)HAESSEL Thomas

(57) Abstract :
The invention relates to a vehicle seat (1), in particular an automobile seat, comprising a longitudinal adjuster (3), a pair of seat rails (5, 8) having a first seat rail (5) fixed on the structure, a second seat rail (8) guided in said first seat rail (5) in the longitudinal direction (x) of the seat and connected to the vehicle seat (1), a releasable latching device (12) having at least one actuating pin (14) that projects over the second seat rail (8) at least in one position, a pivotably arrmiged actuating lever (37), a Bowden cable (33) having a sheath (33a) and a core (33b). A holder (35) is provided, which holder is fixed on a rail and supports the actuating lever (37) such as to be pivotable about a pivot axis (S) at one end (37a), and a contact surface is formed on the actuating lever (37), on which surface the core (33b) of the Bowden cable (33) rests in a subarea between the end of the sheath (33 a) and the end of the core (33b). The holder (35), which is fixed on a rail, secures the end of the core (33b) of the Bowden cable (33), and the actuating lever (37) has a Bowden cable support (37d) on which the sheath (33a) of the Bowden cable is supported directly or indirectly.

No. of Pages : 20 No. of Claims : 10

(12) PATENT APPLICATION PUBLICATION
(19) INDIA
(22) Date of filing of Application :29/10/2013
(21) Application No.9319/DELNP/2013 A
(43) Publication Date : 19/12/2014

(54) Title of the invention : CIRCUIT BREAKER COMPRISING VENTILATION CHANNELS FOR EFFICIENT HEAT DISSIPATION

(51) International classification :H01H71/02,H01H9/34,H01H9/52
(31) Priority Document No :11182094.0
(32) Priority Date :21/09/2011
(33) Name of priority country :EPO
(86) International Application No :PCT/EP2012/067125
Filing Date :03/09/2012
(87) International Publication No :WO 2013/041358
(61) Patent of Addition to Application Number :NA
Filing Date :NA
(62) Divisional to Application Number :NA
Filing Date :NA

(71)**Name of Applicant :**
1)SIEMENS AKTIENGESELLSCHAFT
Address of Applicant :Wittelsbacherplatz 2 80333 M¼nchen Germany
(72)**Name of Inventor :**
1)SPIES Alexander
2)FEIL Wolfgang
3)KREUTZER Rainer

(57) Abstract :
The invention relates to a circuit breaker comprising a housing equipped with a first switchgear region (1) in which a quenching chamber device (5) and a sliding contact device (7) having movable contacts (9) are located said contacts lying opposite fixed contacts (10) and equipped with a second switchgear region (3) in which a current release assembly consisting of a short circuit release (17) and an overload release (26) are located. The invention is characterised in that a continuous ventilation channel (33) is formed within opposing housing walls along the fixed contacts (10) said channel acting as a first convective air flow through the circuit breaker in order to dissipate the heat.

No. of Pages : 19 No. of Claims : 8

(12) PATENT APPLICATION PUBLICATION
(19) INDIA
(22) Date of filing of Application :31/10/2013
(21) Application No.9396/DELNP/2013 A
(43) Publication Date : 19/12/2014

(54) Title of the invention : COMPOSITIONS COMPRISING HYDROGEL PARTICLES

(51) International classification :A61K9/14,A61P43/00
(31) Priority Document No :201110126994.8
(32) Priority Date :06/05/2011
(33) Name of priority country :China
(86) International Application No :PCT/US2012/036346
Filing Date :03/05/2012
(87) International Publication No :WO 2012/154505
(61) Patent of Addition to Application Number :NA
Filing Date :NA
(62) Divisional to Application Number :NA
Filing Date :NA

(71)**Name of Applicant :**
1)JOHNSON & JOHNSON CONSUMER COMPANIES INC.
Address of Applicant :199 Grandview Road Skillman NJ 08558 U.S.A.
(72)**Name of Inventor :**
1)WU Xufeng

(57) Abstract :
Provided are stable compositions comprising an aqueous carrier hydrogel particles comprising one or more polysaccharides and one or more surfactants. Also provided are methods of making such compositions.

No. of Pages : 28 No. of Claims : 23

(12) PATENT APPLICATION PUBLICATION
(19) INDIA
(22) Date of filing of Application :23/10/2013
(21) Application No.9147/DELNP/2013 A
(43) Publication Date : 19/12/2014

(54) Title of the invention : ELECTRIC VEHICLE AND CONTROL METHOD THEREFOR

(51) International classification :H02J7/00,B60L3/00,B60L11/18
(31) Priority Document No :NA
(32) Priority Date :NA
(33) Name of priority country :NA
(86) International Application No:PCT/JP2011/057581
Filing Date :28/03/2011
(87) International Publication No :WO 2012/131864
(61) Patent of Addition to Application Number :NA
Filing Date :NA
(62) Divisional to Application Number :NA
Filing Date :NA

(71)**Name of Applicant :**
1)TOYOTA JIDOSHA KABUSHIKI KAISHA
Address of Applicant :1 Toyota cho Toyota shi Aichi 4718571 Japan
(72)**Name of Inventor :**
1)ISHISHITA Teruo

(57) Abstract :
A hybrid vehicle, which is illustrated as a representative example of an electric vehicle, is equipped with: an electricity storage device for which deposition deterioration, wherein metal is deposited on the electrode surface during charging, occurs; a power generation mechanism for generating charging power for the electricity storage device; a charge status estimation unit for estimating the remaining capacity of the electricity storage device on the basis of a status value for the electricity storage device; and a charge/discharge control unit for controlling the charging/ discharging of the electricity storage device on the basis of the estimated value for the remaining capacity as estimated by the charge status estimation unit. When the estimated value for the remaining capacity falls below a predetermined criterion value, the charge/discharge control unit restricts the charging power for the electricity storage device generated by the power generation mechanism.

No. of Pages : 48 No. of Claims : 9

(12) PATENT APPLICATION PUBLICATION
(19) INDIA
(22) Date of filing of Application :23/10/2013
(21) Application No.9148/DELNP/2013 A
(43) Publication Date : 19/12/2014

(54) Title of the invention : EXHAUST GAS PURIFICATION CATALYST

(51) International classification :B01J23/44,B01D53/94,F01N3/08
(31) Priority Document No :2011086552
(32) Priority Date :08/04/2011
(33) Name of priority country :Japan
(86) International Application No :PCT/JP2012/059559
Filing Date :06/04/2012
(87) International Publication No :WO 2012/137937
(61) Patent of Addition to Application Number :NA
Filing Date :NA
(62) Divisional to Application Number :NA
Filing Date :NA

(71)**Name of Applicant :**
1)TOYOTA JIDOSHA KABUSHIKI KAISHA
Address of Applicant :1 Toyota cho Toyota shi Aichi 4718571 Japan
(72)**Name of Inventor :**
1)TAKAGI Nobuyuki
2)SOBUE Yuichi
3)IKEDA Hanae
4)KAMADA Masaya
5)INDE Ryoichi

(57) Abstract :
This exhaust gas purification catalvst has a substrate (54), a lower laver (57) arranged on the substrate (54), and an upper layer (58) arranged on said lower layer (57). The upper layer (58) is provided with a first catalyst and a second catalyst, and the lower layer (57) is provided with the first catalyst. The first catalyst has AI2O3 a s a carrier and has Pt and P d a s noble metals supported on said A1203. The second catalyst typically has Al203 -Zr02-Ti02 complex oxides and has Pd a s a noble metal supported o n said Al203-Zr02-Ti02 complex oxides. Further, the upper layer (58) has a hydrocarbon absorbent (68).

No. of Pages : 42 No. of Claims : 9

(12) PATENT APPLICATION PUBLICATION
(19) INDIA
(22) Date of filing of Application :23/10/2013
(21) Application No.9149/DELNP/2013 A
(43) Publication Date : 19/12/2014

(54) Title of the invention : LARGE CRYSTAL ORGANIC FREE CHABAZITE METHODS OF MAKING AND USING THE SAME

(51) International classification :B01J29/06
(31) Priority Document No :61/476575
(32) Priority Date :18/04/2011
(33) Name of priority country :U.S.A.
(86) International Application No :PCT/US2012/033948
Filing Date :17/04/2012
(87) International Publication No :WO 2012/145323
(61) Patent of Addition to Application Number :NA
Filing Date :NA
(62) Divisional to Application Number :NA
Filing Date :NA

(71)**Name of Applicant :**
1)PQ CORPORATION
Address of Applicant :P.O. Box 840 Valley Forge PA 19482 0840 U.S.A.
(72)**Name of Inventor :**
1)LI Hong Xin
2)CORMIER William E.
3)MODEN Bjom
4)COOPER David

(57) Abstract :
There is disclosed a method to synthesize microporous crystalline material comprising a metal containing chabazite having a crystal size greater than 0.5 microns and a silica-to-alumina ratio (SAR) between 5 and 15, wherein the method is carried out without the use of an organic structural directing agent and without requiring calcination. There is also disclosed a large crystal organic free chabazite made according to the disclosed method. In addition, there are disclosed methods of using the disclosed crystalline material, such as in the selective catalytic reduction of NOx in exhaust gases.

No. of Pages : 31 No. of Claims : 26

(12) PATENT APPLICATION PUBLICATION
(19) INDIA
(22) Date of filing of Application :31/10/2013
(21) Application No.9400/DELNP/2013 A
(43) Publication Date : 19/12/2014

(54) Title of the invention : EXTRACTION OF CARBOXYLIC ACIDS WITH TIN COMPOUNDS

(51) International classification	:B01D11/04,C07C231/24,C07H13/02
(31) Priority Document No	:61/484476
(32) Priority Date	:10/05/2011
(33) Name of priority country	:U.S.A.
(86) International Application No	:PCT/GB2012/051010
Filing Date	:09/05/2012
(87) International Publication No	:WO 2012/153128
(61) Patent of Addition to Application Number	:NA
Filing Date	:NA
(62) Divisional to Application Number	:NA
Filing Date	:NA

(71)**Name of Applicant :**
1)TATE & LYLE TECHNOLOGY LIMITED
Address of Applicant :1 Kingsway London WC2B 6AT U.K.
(72)**Name of Inventor :**
1)MICINSKI Edward
2)COLEMAN David
3)WILEY James Edwin
4)DENTEL David A
5)EILERS Thomas

(57) Abstract :
A method of removing a carboxylic acid from a liquid including a tertiary amide solvent includes the steps of: A) forming an extraction medium comprising an acid-extracting tin species and an extraction solvent that is immiscible with the tertiary amide solvent; B) subsequently contacting the liquid including the tertiary amide solvent with said extraction medium, thereby forming a phase including a de-acidified tertiary amide solvent and a phase including the extraction solvent; and C) removing the phase including the extraction solvent, to afford a liquid including the de-acidified tertiary amide solvent; wherein the acid-extracting tin species is selected from the group consisting of tin species obtainable by reaction of a di(hydrocarbyl) tin oxide with less than one equivalent of a carboxylic acid, tin species obtainable by reaction of a 1,3-diacyloxy- l,l,3,3-tetra-(hydrocarbyl)distannoxane with an aqueous base, and combinations of these.

No. of Pages : 30 No. of Claims : 29

(12) PATENT APPLICATION PUBLICATION
(19) INDIA
(22) Date of filing of Application :25/10/2013
(21) Application No.9230/DELNP/2013 A
(43) Publication Date : 19/12/2014

(54) Title of the invention : DIRECT PLUG ELEMENT IN PARTICULAR FOR A VEHICLE CONTROLLER

(51) International classification :H01R33/00
(31) Priority Document No :102011076962.5
(32) Priority Date :06/06/2011
(33) Name of priority country :Germany
(86) International Application No :PCT/EP2012/057401
Filing Date :23/04/2012
(87) International Publication No :WO 2012/167986
(61) Patent of Addition to Application Number :NA
Filing Date :NA
(62) Divisional to Application Number :NA
Filing Date :NA

(71)**Name of Applicant :**
1)ROBERT BOSCH GMBH
Address of Applicant :Postfach 30 02 20 70442 Stuttgart Germany
(72)**Name of Inventor :**
1)KROECKEL Markus

(57) Abstract :
The present invention relates to a direct plug element comprising a plug housing (6) and a direct contact (2) having a contact lamination (3), having a contact section (31) and an abutment section (32), and a direct contact housing (4), wherein the contact lamination (3) is arranged in the direct contact housing (4) in such a way that the abutment section (32) protrudes out of the direct contact housing (4) in a longitudinal direction (8) of the direct contact (2) or is arranged in the direct contact housing (4) in the vicinity of an opening (62) which is oriented in the longitudinal direction (8).

No. of Pages : 18 No. of Claims : 10

(12) PATENT APPLICATION PUBLICATION
(19) INDIA
(22) Date of filing of Application :31/10/2013
(21) Application No.9407/DELNP/2013 A
(43) Publication Date : 19/12/2014

(54) Title of the invention : SAFETY SYRINGE FOR NEEDLELESS INJECTOR

(51) International classification :A61M5/30,A61J1/06
(31) Priority Document No :61/457460
(32) Priority Date :04/04/2011
(33) Name of priority country :U.S.A.
(86) International Application No :PCT/CA2012/000332
Filing Date :03/04/2012
(87) International Publication No :WO 2012/135943
(61) Patent of Addition to Application Number :NA
Filing Date :NA
(62) Divisional to Application Number :NA
Filing Date :NA

(71)**Name of Applicant :**
1)IDEE INTERNATIONAL R&D Inc.
Address of Applicant :1872 Beaulac Street Ville Saint Laurent Montreal Quebec H4R 2E7 Canada
(72)**Name of Inventor :**
1)MENASSA Karim

(57) Abstract :
A disposable syringe for use in a needleless injector includes a tubular body with an open rear end, a closed front end containing an injection orifice, a chamber in the body for receiving a liquid and a plunger slidable in the chamber for pushing the liquid out of the orifice. A tip is provided on the inner end of the plunger for separation from the remainder of the plunger to block the orifice when the plunger is retracted after an injection, whereby the syringe cannot be re-used.

No. of Pages : 25 No. of Claims : 10

(12) PATENT APPLICATION PUBLICATION
(19) INDIA
(22) Date of filing of Application :31/10/2013
(21) Application No.9408/DELNP/2013 A
(43) Publication Date : 19/12/2014

(54) Title of the invention : STEEL FREE SEMI ARCHED SLABS FOR HOUSING CONCRETE STRUCTURE

(51) International classification :E04C2/00
(31) Priority Document No :2011050671
(32) Priority Date :02/05/2011
(33) Name of priority country :Egypt
(86) International Application No :PCT/EG2012/000009
Filing Date :22/04/2012
(87) International Publication No :WO 2012/149942
(61) Patent of Addition to Application Number :NA
Filing Date :NA
(62) Divisional to Application Number :NA
Filing Date :NA

(71)**Name of Applicant :**
1)RAGHEB Tarek Salah Eldin Mostafa
Address of Applicant :35 Mohamed Yosf St. Regon 1 Nasr City Egypt
(72)**Name of Inventor :**
1)RAGHEB Tarek Salah Eldin Mostafa

(57) Abstract :
This is a new system of slabs for housing units and any concrete structure without any steel with arch slab. The new system depends on the arch action with tie and this is the first time to use this system in housing and with only concrete section. This models has clearance spans are 4 meters to 10.15 m and different curvature from 8cm to 32 cm as in (figure 2 3 4 5 6 7).The ties has different area of steel as in the figure 2 to 7. The invention based on the degree of the arch and amount of the steel at the tie. There is no any fiber on the concrete.

No. of Pages : 16 No. of Claims : 7

(12) PATENT APPLICATION PUBLICATION
(19) INDIA
(22) Date of filing of Application :31/10/2013
(21) Application No.9410/DELNP/2013 A
(43) Publication Date : 19/12/2014

(54) Title of the invention : METHOD FOR SUPPLYING SEQUENTIAL POWER IMPULSES

(51) International classification :H01J37/34,C23C14/34
(31) Priority Document No :10 2011 018 363.9
(32) Priority Date :20/04/2011
(33) Name of priority country :Germany
(86) International Application No :PCT/EP2012/001484
Filing Date :04/04/2012
(87) International Publication No :WO 2012/143091
(61) Patent of Addition to Application Number :NA
Filing Date :NA
(62) Divisional to Application Number :NA
Filing Date :NA

(71)**Name of Applicant :**
1)OERLIKON TRADING AG TRBBACH
Address of Applicant :Hauptstrasse 53 CH 9477 Tr¼bbach Switzerland
(72)**Name of Inventor :**
1)KRASSNITZER Siegfried
2)LENDI Daniel
3)LECHTHALER Markus
4)RUHM Kurt

(57) Abstract :
The invention relates to a method for supplying power impulses for PVD sputtering cathodes subdivided into partial cathodes. In said method, the power impulse inten/als acting on the partial cathodes are selected in such a way as to overlap, thereby dispensing with the need to interrupt the drawing of power supplied by the generator.

No. of Pages : 14 No. of Claims : 10

(12) PATENT APPLICATION PUBLICATION
(19) INDIA
(22) Date of filing of Application :31/10/2013
(21) Application No.9411/DELNP/2013 A
(43) Publication Date : 19/12/2014

(54) Title of the invention : TRANSDUCER FOR PHASED ARRAY ACOUSTIC SYSTEMS

(51) International classification :G10K11/20
(31) Priority Document No :61/488376
(32) Priority Date :20/05/2011
(33) Name of priority country :U.S.A.
(86) International Application No :PCT/US2012/038645
Filing Date :18/05/2012
(87) International Publication No :WO 2012/162170
(61) Patent of Addition to Application Number :NA
Filing Date :NA
(62) Divisional to Application Number :NA
Filing Date :NA

(71)**Name of Applicant :**
1)SECOND WIND SYSTEMS INC.
Address of Applicant :366 Summer Street Somerville MA 02144 U.S.A.
(72)**Name of Inventor :**
1)LAWHITE Niels
2)HASTINGS BLACK Andrew
3)MANFREDI Louis
4)JOBIN Michael
5)SASS Walter L.

(57) Abstract :
A transducer includes a base a horn and a central element. The horn includes a first end coupled to the base and a second end extending from the base and having a perimeter that defines a substantially planar face of the transducer the horn defining a horn length along a horn surface between the first end and the second end of the horn. The central element includes a first end coupled to the base and a second end extending from the base along a longitudinal axis of the horn the central element defining a central element length along a central element surface between the first end and the second end of the central element the central element length being substantially equal to the horn length.

No. of Pages : 60 No. of Claims : 21

(12) PATENT APPLICATION PUBLICATION
(19) INDIA
(22) Date of filing of Application :31/10/2013
(21) Application No.9412/DELNP/2013 A
(43) Publication Date : 19/12/2014

(54) Title of the invention : A NOVEL CHROMATOGRAPHIC MEDIA BASED ON ALLYLAMINE AND ITS DERIVATIVE FOR PROTEIN PURIFICATION

(51) International classification :G01N30/50
(31) Priority Document No :61/518258
(32) Priority Date :03/05/2011
(33) Name of priority country :U.S.A.
(86) International Application No :PCT/US2012/036237
Filing Date :03/05/2012
(87) International Publication No :WO 2012/151352
(61) Patent of Addition to Application Number :NA
Filing Date :NA
(62) Divisional to Application Number :NA
Filing Date :NA

(71)**Name of Applicant :**
1)AVANTOR PERFORMANCE MATERIALS INC.
Address of Applicant :222 Red School Lane Phillipsburg NJ 08865 U.S.A.
(72)**Name of Inventor :**
1)THIYAGARAJAN Bhaktavachalam
2)GUO Wei
3)DEORKAR Nandu

(57) Abstract :
Chromatographic media of porous media particles derivatized with allylamine or polyallylamine obtained directly or through intermolecular polymerization on the surface thereof and such media functionalized with further functionalization groups. Such media are particularly useful for separating biomolecules.

No. of Pages : 27 No. of Claims : 23

(12) PATENT APPLICATION PUBLICATION
(19) INDIA
(22) Date of filing of Application :30/10/2013
(21) Application No.9385/DELNP/2013 A
(43) Publication Date : 19/12/2014

(54) Title of the invention : ELEVATOR TENSION MEMBER

(51) International classification :B66B7/06,D07B1/16,D07B1/06
(31) Priority Document No :NA
(32) Priority Date :NA
(33) Name of priority country :NA
(86) International Application No :PCT/US2011/039896
Filing Date :10/06/2011
(87) International Publication No :WO 2012/170031
(61) Patent of Addition to Application Number :NA
Filing Date :NA
(62) Divisional to Application Number :NA
Filing Date :NA

(71)**Name of Applicant :**
1)OTIS ELEVATOR COMPANY
Address of Applicant :Ten Farm Springs Road Farmington CT 06032 2568 U.S.A.
(72)**Name of Inventor :**
1)WESSON John P.
2)ZHANG Huan
3)KRISHNAN Gopal R.

(57) Abstract :
Elevator tension members are disclosed. The disclosed tension member longitudinally extends along a longitudinal axis and includes a plurality of fibers formed into one or more primary strands or cords extending parallel to the longitudinal axis and a plurality of fibers formed into one or more secondary strands or cords extending parallel to the longitudinal axis and through less than the full length of the belt and a jacket retaining the primary and secondary strands or cords. The secondary strands or cords have a tensile modulus greater than a tensile modulus of the jacket and less than a tensile modulus of the primary strands or cords. Methods of making the tension member are also disclosed.

No. of Pages : 28 No. of Claims : 21

(12) PATENT APPLICATION PUBLICATION
(19) INDIA
(22) Date of filing of Application :30/10/2013
(21) Application No.9386/DELNP/2013 A
(43) Publication Date : 19/12/2014

(54) Title of the invention : FILMS OF POLYMER WAX COMPOSITIONS

(51) International classification :C08K5/00,C08J5/18
(31) Priority Document No :61/488568
(32) Priority Date :20/05/2011
(33) Name of priority country :U.S.A.
(86) International Application No :PCT/US2012/038323
Filing Date :17/05/2012
(87) International Publication No :WO 2012/162086
(61) Patent of Addition to Application Number :NA
Filing Date :NA
(62) Divisional to Application Number :NA
Filing Date :NA

(71)**Name of Applicant :**
1)THE PROCTER & GAMBLE COMPANY
Address of Applicant :One Procter & Gamble Plaza Cincinnati Ohio 45202 U.S.A.
(72)**Name of Inventor :**
1)ALLEN William Maxwell
2)BOND Eric Bryan
3)NODA Isao

(57) Abstract :
Films formed from compositions comprising thermoplastic polymers and waxes are disclosed where the wax is dispersed throughout the thermoplastic polymer. Also disclosed are articles formed from films of these compositions.

No. of Pages : 38 No. of Claims : 7

(12) PATENT APPLICATION PUBLICATION
(19) INDIA
(22) Date of filing of Application :30/10/2013
(21) Application No.9387/DELNP/2013 A
(43) Publication Date : 19/12/2014

(54) Title of the invention : SUBSTITUTED INDOLE DERIVATIVES FOR THE TREATMENT OF IMMUNOLOGICAL DISORDERS

(51) International classification :C07D401/14,C07F9/141,A61K31/496
(31) Priority Document No :61/486808
(32) Priority Date :17/05/2011
(33) Name of priority country :U.S.A.
(86) International Application No :PCT/IB2012/052473
Filing Date :16/05/2012
(87) International Publication No :WO 2012/156936
(61) Patent of Addition to Application Number :NA
Filing Date :NA
(62) Divisional to Application Number :NA
Filing Date :NA

(71)**Name of Applicant :**
1)NOVARTIS AG
Address of Applicant :Lichtstrasse 35 4056 Basel Switzerland
(72)**Name of Inventor :**
1)COOKE Nigel Graham
2)RAMOS Rita
3)KAMMERTOENS Karen
4)VAN EIS Maurice

(57) Abstract :
The present invention relates to substituted indole derivatives to processes for their production their use as pharmaceuticals and to pharmaceutical compositions comprising them. (I).

No. of Pages : 45 No. of Claims : 14

(12) PATENT APPLICATION PUBLICATION
(19) INDIA
(22) Date of filing of Application :31/10/2013
(21) Application No.9420/DELNP/2013 A
(43) Publication Date : 19/12/2014

(54) Title of the invention : RADIO NETWORK NODE AND METHOD FOR USING POSITIONING GAP INDICATION FOR ENHANCING POSITIONING PERFORMANCE

(51) International classification :H04W24/10
(31) Priority Document No :61/471303
(32) Priority Date :04/04/2011
(33) Name of priority country :U.S.A.
(86) International Application No :PCT/IB2012/051669
Filing Date :04/04/2012
(87) International Publication No :WO 2012/137153
(61) Patent of Addition to Application Number :NA
Filing Date :NA
(62) Divisional to Application Number :NA
Filing Date :NA

(71)**Name of Applicant :**
1)TELEFONAKTIEBOLAGET L M ERICSSON (PUBL)
Address of Applicant :16483 Stockholm S 16483 Stockholm Sweden
(72)**Name of Inventor :**
1)SIOMINA Iana
2)KAZMI Muhammad

(57) Abstract :
A wireless communications network is described herein m which positioning measurements (e.g., inter-frequency OTDOA measurements and inter- frequency E-CID measurements) may be performed on different frequencies and measurement gaps may be requested for such measurements. In one embodiment, a radio network node (e.g., eNodeB, responsible node) is described for configuring a measurement: gap for positioning to be used by a user equipment (UE).

No. of Pages : 61 No. of Claims : 41

(12) PATENT APPLICATION PUBLICATION
(19) INDIA
(22) Date of filing of Application :31/10/2013
(21) Application No.9421/DELNP/2013 A
(43) Publication Date : 19/12/2014

(54) Title of the invention : METHOD FOR MANUFACTURING HEAT RAY SHIELDING FINE PARTICLE CONTAINING COMPOSITION AND HEAT RAY SHIELDING FINE PARTICLE CONTAINING COMPOSITION A HEAT RAY SHIELDING FILM USING THE HEAT RAY SHIELDING FINE PARTICLE CONTAINING COMPOSITION AND A HEAT RAY SHIELDING LAMINATED TRANSPARENT BASE MATERIAL USING THE HEAT RAY SHIELDING FILM

(51) International classification :C09C1/00
(31) Priority Document No :2011090514
(32) Priority Date :14/04/2011
(33) Name of priority country :Japan
(86) International Application No :PCT/JP2012/002548
Filing Date :12/04/2012
(87) International Publication No :WO 2012/140896
(61) Patent of Addition to Application Number :NA
Filing Date :NA
(62) Divisional to Application Number :NA
Filing Date :NA

(71)**Name of Applicant :**
1)SUMITOMO METAL MINING CO. LTD.
Address of Applicant :11 3 Shimbashi 5 chome Minato ku Tokyo 1058716 Japan
(72)**Name of Inventor :**
1)FUJITA Kenichi
2)KOBAYASHI Hiroshi

(57) Abstract :
To provide a heat ray shielding film and a method for manufacturing the same capable of exhibiting excellent optical characteristics and high weather resistance mainly composed of polyvinyl acetal resin and using composite tungsten oxide fine particles with high heat ray shielding effect the method comprising: a first step of obtaining a dispersion liquid by dispersing composite tungsten oxide fine particles expressed by a general formula MyWOz and having a hexagonal crystal structure and dispersing a dispersant into an organic solvent with a boiling point of 120 deg C or less; a second step of obtaining a mixture by mixing metal carboxylate into the dispersion liquid obtained by the first step; and a third step of drying the mixture obtained by the second step to thereby obtain a heat ray shielding fine particle containing composition and setting a content of the organic solvent remained in the heat ray shielding fine particle containing composition to 5 mass% or less.

No. of Pages : 34 No. of Claims : 9

(12) PATENT APPLICATION PUBLICATION
(19) INDIA
(22) Date of filing of Application :31/10/2013
(21) Application No.9422/DELNP/2013 A
(43) Publication Date : 19/12/2014

(54) Title of the invention : FEBUXOSTAT SOLID DISPERSION

(51) International classification	:A61K9/14,A61K31/426,A61K47/32
(31) Priority Document No	:1120/DEL/2011
(32) Priority Date	:15/04/2011
(33) Name of priority country	:India
(86) International Application No	:PCT/IB2012/051892
Filing Date	:16/04/2012
(87) International Publication No	:WO 2012/140632
(61) Patent of Addition to Application Number	:NA
Filing Date	:NA
(62) Divisional to Application Number	:NA
Filing Date	:NA

(71)**Name of Applicant :**
1)RANBAXY LABORATORIES LIMITED
Address of Applicant :Head Office: 12th Floor Devika Tower 06 Nehru Place New Delhi Delhi 110019 Delhi India
(72)**Name of Inventor :**
1)KAUSHIK Poonam
2)THAIMATTAM Ram
3)PRASAD Mohan

(57) Abstract :
The present invention provides a solid dispersion of febuxostat processes for its preparation pharmaceutical compositions comprising it and its use for the chronic management of hyperuricemia in patients with gout.

No. of Pages : 10 No. of Claims : 9

(12) PATENT APPLICATION PUBLICATION
(19) INDIA
(22) Date of filing of Application :29/10/2013
(21) Application No.9331/DELNP/2013 A
(43) Publication Date : 19/12/2014

(54) Title of the invention : NOVEL BINDER DRUG CONJUGATES (ADCS) AND THEIR USE

(51) International classification :A61K47/48,C07K16/30,A61P35/00
(31) Priority Document No :11163474.7
(32) Priority Date :21/04/2011
(33) Name of priority country :EPO
(86) International Application No :PCT/EP2012/057243
Filing Date :20/04/2012
(87) International Publication No :WO 2012/143495
(61) Patent of Addition to Application Number :NA
Filing Date :NA
(62) Divisional to Application Number :NA
Filing Date :NA

(71)**Name of Applicant :**
1)BAYER INTELLECTUAL PROPERTY GMBH
Address of Applicant :Alfred Nobel Str. 10 40789 Monheim Germany
2)BAYER PHARMA AKTIENGESELLSCHAFT
(72)**Name of Inventor :**
1)LERCHEN Hans Georg
2)EL SHEIKH Sherif
3)BEIER Rudolf
4)BRUDER Sandra
5)STELTE LUDWIG Beatrix
6)J–RIEN Hannah
7)MAHLERT Christoph
8)GREVEN Simone
9)PETRUL Heike
10)SCHUHMACHER Joachim
11)LINDEN Lars
12)WILLUDA Jrg
13)KOPITZ Charotte Christine
14)GOLFIER Sven
15)HEISLER Iring
16)HARRENGA Axel
17)THIERAUCH Karl Heinz
18)BORKOWSKI Sandra

(57) Abstract :
The present patent application relates to novel binder-drug conjugates (ADCs) of N,N-dialkylauristatins directed against the target epidermal growth factor receptor (EGFR, gene n> 1956), effective metabolites of these ADCs, methods for producing these ADCs, use of these ADCs for treatment and or prevention of diseases as well as the use of these ADCs to produce pharmaceutical drugs for treatment and/or prevention of diseases, in particular hyperproliferative and/or angiogenic diseases such as cancer, for example. Such treatments may be administered as monotherapy or in combination with other pharmaceutical drugs or other therapeutic measures.

No. of Pages : 1089 No. of Claims : 53

(12) PATENT APPLICATION PUBLICATION
(19) INDIA
(22) Date of filing of Application :31/10/2013
(21) Application No.9430/DELNP/2013 A
(43) Publication Date : 19/12/2014

(54) Title of the invention : A SERVER A SYSTEM A METHOD A COMPUTER PROGRAM AND A COMPUTER PROGRAM PRODUCT FOR ACCESSING A SERVER IN A COMPUTER NETWORK

(51) International classification :H04L29/06
(31) Priority Document No :11305526.3
(32) Priority Date :04/05/2011
(33) Name of priority country :EPO
(86) International Application No :PCT/EP2012/055447
Filing Date :28/03/2012
(87) International Publication No :WO 2012/150096
(61) Patent of Addition to Application Number :NA
Filing Date :NA
(62) Divisional to Application Number :NA
Filing Date :NA

(71)**Name of Applicant :**
1)ALCATEL LUCENT
Address of Applicant :3 avenue Octave Grard F 75007 Paris France
(72)**Name of Inventor :**
1)ROBINSON Julien
2)STAN Johann
3)NATARIANNI Lionel

(57) Abstract :
The invention concerns a first server (101) for accessing a second server (102) via a computer network (100) adapted to upon successful authentication of first credentials of a first user (EU) registered on said first server (101) by said first server (101) provide said first user (EU) access to at least a subset of functions provided by an interface (API) of said second server (102) using second credentials of a second user (HU) registered on said second server (102) for authentication with said second server (102).

No. of Pages : 25 No. of Claims : 15

(12) PATENT APPLICATION PUBLICATION
(19) INDIA
(22) Date of filing of Application :31/10/2013
(21) Application No.9432/DELNP/2013 A
(43) Publication Date : 19/12/2014

(54) Title of the invention : HEXAGONAL PLATE SHAPED ZINC OXIDE PARTICLES PRODUCTION METHOD THEREFOR AND COSMETIC MATERIAL HEAT DISSIPATING FILLER HEAT DISSIPATING RESIN COMPOSITION HEAT DISSIPATING GREASE AND HEAT DISSIPATING COATING COMPOSITION HAVING SAME BLENDED THEREIN

(51) International classification :C01G9/02,A61K8/27,A61Q1/00
(31) Priority Document No :2011101021
(32) Priority Date :28/04/2011
(33) Name of priority country :Japan
(86) International Application No :PCT/JP2012/061280
Filing Date :26/04/2012
(87) International Publication No :WO 2012/147886
(61) Patent of Addition to Application Number :NA
Filing Date :NA
(62) Divisional to Application Number :NA
Filing Date :NA

(71)**Name of Applicant :**
1)SAKAI CHEMICAL INDUSTRY CO. LTD.
Address of Applicant :5 2 Ebisujima cho Sakai ku Sakai shi Osaka 5908502 Japan
(72)**Name of Inventor :**
1)SUEDA Satoru
2)HASHIMOTO Mitsuo
3)TERABE Atsuki
4)WATANABENobuo
5)MAGARA Koichiro

(57) Abstract :
To obtain: hexagonal plate shaped zinc oxide particles capable of being used as a raw material for a cosmetic material a heat dissipating filler etc.; a production method therefor; and a cosmetic material a heat dissipating filler a heat dissipating resin composition a heat dissipating grease and a heat dissipating coating composition having same blended therein. [Solution] Hexagonal plate shaped zinc oxide particles characterized by having: a primary particle diameter of at least 0.01 μm; an aspect ratio of at least 2.5; at least 50% particles among 250 particles in a transmission electron microscopic photograph fulfilling all conditions under (1) and (2); and a hexagonal surface. (1) The particles must have a hexagonal surface. (2) Dmin/Dmax0.3 (wherein Dmax indicates the length of the longest diagonal line among three diagonal lines in the hexagonal surface of the hexagonal plate shaped zinc oxide particles and Dmin indicates the length of the shortest diagonal line among three diagonal lines in the hexagonal surface of the hexagonal plate shaped zinc oxide particles.)

No. of Pages : 58 No. of Claims : 8

(12) PATENT APPLICATION PUBLICATION
(19) INDIA
(22) Date of filing of Application :01/11/2013
(21) Application No.9434/DELNP/2013 A
(43) Publication Date : 19/12/2014

(54) Title of the invention : PROCESS FOR THE MANUFACTURE OF CARBON SHEET FOR AN ELECTRODE

(51) International classification :C01B31/02,C01B31/04,C08L27/18
(31) Priority Document No :61/481848
(32) Priority Date :03/05/2011
(33) Name of priority country :U.S.A.
(86) International Application No :PCT/US2012/036209
Filing Date :03/05/2012
(87) International Publication No :WO 2012/151341
(61) Patent of Addition to Application Number :NA
Filing Date :NA
(62) Divisional to Application Number :NA
Filing Date :NA

(71)**Name of Applicant :**
1)AXION POWER INTERNATIONAL INC.
Address of Applicant :3601 Clover Lane New Castle Pennsylvania 16105 U.S.A.
(72)**Name of Inventor :**
1)DANDREA Jay

(57) Abstract :
A method of making a single carbon sheet for an electrode includes mixing activated carbon; adding a dispersion comprising a PTFE binder and water to the activated carbon to form a mixture; adding the mixture to a jet mill and fibrillating the PTFE binder; and feeding the mixture with fibrillated PTFE to a roll mill to form a single carbon sheet in a single pass.

No. of Pages : 20 No. of Claims : 17

(12) PATENT APPLICATION PUBLICATION
(19) INDIA
(22) Date of filing of Application :01/11/2013
(21) Application No.9435/DELNP/2013 A
(43) Publication Date : 19/12/2014

(54) Title of the invention : CACHE MEMORY STRUCTURE AND METHOD

(51) International classification :G06F17/30
(31) Priority Document No :11305430.8
(32) Priority Date :12/04/2011
(33) Name of priority country :EPO
(86) International Application No :PCT/EP2012/056594
Filing Date :11/04/2012
(87) International Publication No :WO 2012/140093
(61) Patent of Addition to Application Number :NA
Filing Date :NA
(62) Divisional to Application Number :NA
Filing Date :NA

(71)**Name of Applicant :**
1)AMADEUS S.A.S.
Address of Applicant :485 route du Pin Montard Sophia Antipolis F 06410 Biot France
(72)**Name of Inventor :**
1)AMAR Virginie
2)CAPANACCIA Luc
3)TOUFFAIT Guillaume
4)PELLISE Sbastien
5)LEBLANC Xavier

(57) Abstract :
The invention relates to a cache memory and method for controlling access to data. According to the invention a control area which is advantageously formed separate from a data area (410) is provided for controlling the access to data stored in the cache and to be read by applicative processes. The control area comprises at least one release area (430) with offsets (442) and data version definition sections (452 454 456). Application to shared memories for client server architectures.

No. of Pages : 30 No. of Claims : 17

(12) PATENT APPLICATION PUBLICATION
(19) INDIA
(22) Date of filing of Application :28/10/2013
(21) Application No.9284/DELNP/2013 A
(43) Publication Date : 19/12/2014

(54) Title of the invention : ELEVATOR SYSTEM FIXTURES AND SERVER FOR CONTROLLING THE FIXTURES

(51) International classification :B66B1/06,B66B1/34
(31) Priority Document No :NA
(32) Priority Date :NA
(33) Name of priority country :NA
(86) International Application No :PCT/US2011/044143
Filing Date :15/07/2011
(87) International Publication No :WO 2013/012406
(61) Patent of Addition to Application Number :NA
Filing Date :NA
(62) Divisional to Application Number :NA
Filing Date :NA

(71)**Name of Applicant :**
1)OTIS ELEVATOR COMPANY
Address of Applicant :10 Farm Springs Farmington Connecticut 06032 U.S.A.
(72)**Name of Inventor :**
1)JOYCE Matthew
2)CHAPMAN Ashley
3)SAKAI Osamu
4)ST. LOUIS Baudelaire
5)STANLEY Jannah A.

(57) Abstract :
An exemplary system for communicating with an elevator passenger includes a plurality of elevator passenger interface devices configured to allow an elevator passenger to indicate at least an elevator service request. The interface devices are configured to communicate at least elevator service information to an elevator passenger. A server communicates with the plurality of interface devices. The server is configured to determine when there is input at any of the interface devices. The server is configured to determine a meaning of such input. The server is also configured to determine output to provide at the corresponding interface device and to communicate the determined output to the corresponding interface device. The determined output is responsive to the determined meaning of the input.

No. of Pages : 18 No. of Claims : 25

(12) PATENT APPLICATION PUBLICATION
(19) INDIA
(22) Date of filing of Application :01/11/2013
(21) Application No.9442/DELNP/2013 A
(43) Publication Date : 19/12/2014

(54) Title of the invention : METHOD FOR REDUCING THE CONCENTRATION OF DISINFECTANT DECONTAMINATION APPARATUSES AND SYSTEMS AND RELATED METHODS OF EMPLOYING THE SAME

(51) International classification :A61L2/20,A61L9/14,F24F3/16
(31) Priority Document No :13/098386
(32) Priority Date :29/04/2011
(33) Name of priority country :U.S.A.
(86) International Application No :PCT/US2012/034728
Filing Date :24/04/2012
(87) International Publication No :WO 2012/148868
(61) Patent of Addition to Application Number :NA
Filing Date :NA
(62) Divisional to Application Number :NA
Filing Date :NA

(71)**Name of Applicant :**
1)ETHICON INC.
Address of Applicant :P.O. Box 151 U.S. Route 22 Somerville NJ 08876 U.S.A.
(72)**Name of Inventor :**
1)LUKASIK Robert G.
2)LIN Szu Min
3)PLATT Robert C. Jr.
4)MORRISON Todd

(57) Abstract :
A method of reducing the concentration of disinfectant in an environment having a concentration of disinfectant of about 500 ppm or less for a period of time to a lower concentration is disclosed. The method comprises the steps of dehumidifying the environment for the period of time to remove disinfectant and humidifying the environment with moisture during the period of time to maintain a difference between a lower relative humidity and an upper relative humidity of the environment ranging from about 20 to 50%. A system for decontaminating an environment is also disclosed comprising a source of disinfectant a source of moisture one or more spray generators and a dehumidifier. A method of decontaminating an environment or enclosure is disclosed comprising the steps of introducing disinfectant maintaining liquid disinfectant on surfaces and dehumidifying the environment to increase the disinfectant concentration is also disclosed.

No. of Pages : 37 No. of Claims : 26

(12) PATENT APPLICATION PUBLICATION
(19) INDIA
(22) Date of filing of Application :01/11/2013

(21) Application No.9443/DELNP/2013 A
(43) Publication Date : 19/12/2014

(54) Title of the invention : METHOD FOR CALIBRATING A POURING OUT OPENING OF A PLASTIC CONTAINER PRODUCED BY THE EXTRUSION BLOW MOULDING PROCESS

(51) International classification	:B29C49/76,B65D1/04,B65D81/32
(31) Priority Document No	:825/11
(32) Priority Date	:16/05/2011
(33) Name of priority country	:Switzerland
(86) International Application No	:PCT/EP2012/001545
Filing Date	:10/04/2012
(87) International Publication No	:WO 2012/156009
(61) Patent of Addition to Application Number	:NA
Filing Date	:NA
(62) Divisional to Application Number	:NA
Filing Date	:NA

(71)**Name of Applicant :**
1)ALPLA WERKE ALWIN LEHNER GMBH & CO. KG
Address of Applicant :Allmendstrasse 81 A 6971 Hard Austria
(72)**Name of Inventor :**
1)KNZ Johann

(57) Abstract :
A description is given of a method for ensuring the dimensional stability of pouringout openings in or on a plastic container produced in an extrusion blow moulding process, in particular for calibrating said openings. This involves placing into a cavity (4) of a blow mould (1) a portion (20) of a parison extruded with one or more layers through an extrusion die and inflating it as provided by the enclosed cavity by means of a calibrating blow pin (11), wherein usually at least one of the pouring-out openings of the plastic container is predefined, in particular calibrated, with regard to its inside diameter and its inner contour. After that, the fully inflated plastic container is removed from the mould. In the case of the method according to the invention, all of the pouring-out openings (33, 35) of the plastic container (30) are calibrated substantially at the same time by the inserted calibrating pin (11). For this purpose, the calibrating blow pin (11) is formed as a double calibrating blow pin with two calibrating regions, and the double calibrating blow pin is inserted axially into the portion (20) of the parison once a head plate (5) of the blow mould (1) has been closed, but before the blow mould (1) has reached its fully closed position. A description is also given of a plastic container with pouring-out openings calibrated by the method according to the invention.

No. of Pages : 25 No. of Claims : 14

(12) PATENT APPLICATION PUBLICATION
(19) INDIA
(22) Date of filing of Application :30/10/2013
(21) Application No.9392/DELNP/2013 A
(43) Publication Date : 19/12/2014

(54) Title of the invention : COMPOSITION COMPRISING ANTIMICROBIAL METAL IONS AND A QUATERNARY CATIONIC SURFACTANT

(51) International classification	:A01N59/16,A01N25/30,A01N33/12
(31) Priority Document No	:1105829.4
(32) Priority Date	:06/04/2011
(33) Name of priority country	:U.K.
(86) International Application No	:PCT/GB2012/000329
Filing Date	:05/04/2012
(87) International Publication No	:WO 2012/136968
(61) Patent of Addition to Application Number	:NA
Filing Date	:NA
(62) Divisional to Application Number	:NA
Filing Date	:NA

(71)**Name of Applicant :**
1)CONVATEC TECHNOLOGIES INC
Address of Applicant :3993 Howard Hughes Parkway Suite 250 Las Vegas Nevada 89169 6754 U.S.A.
(72)**Name of Inventor :**
1)PARSONS David

(57) Abstract :
The present invention relates to an antimicrobial composition suitable for use on skin and wounds comprising a source of an antimicrobial metal ion and a quaternary cationic surfactant.

No. of Pages : 25 No. of Claims : 13

(12) PATENT APPLICATION PUBLICATION
(19) INDIA
(22) Date of filing of Application :31/10/2013
(21) Application No.9394/DELNP/2013 A
(43) Publication Date : 19/12/2014

(54) Title of the invention : TREATMENT FOR INFECTION WITH HEPATITIS B VIRUS ALONE OR IN COMBINATION WITH HEPATITIS DELTA VIRUS AND ASSOCIATED LIVER DISEASES

(51) International classification :A61K38/13,A61P31/20,A61P31/14
(31) Priority Document No :61/470666
(32) Priority Date :01/04/2011
(33) Name of priority country :U.S.A.
(86) International Application No :PCT/EP2012/055857
Filing Date :30/03/2012
(87) International Publication No :WO 2012/131061
(61) Patent of Addition to Application Number :NA
Filing Date :NA
(62) Divisional to Application Number :NA
Filing Date :NA

(71)**Name of Applicant :**
1)NOVARTIS AG
Address of Applicant :Lichtstrasse 35 CH 4056 Basel Switzerland
(72)**Name of Inventor :**
1)NAOUMOV Nikolai

(57) Abstract :
The invention concerns the use of cyclophilin inhibitors (such as alisporivir or DEB025) in the treatment of Hepatitis B and Hepatitis D virus infections optionally in combination with interferon or telbivudine lamivudine emtricitabine entecavir adefovir or tenofovir.

No. of Pages : 26 No. of Claims : 11

(12) PATENT APPLICATION PUBLICATION
(19) INDIA
(22) Date of filing of Application :30/10/2013
(21) Application No.9395/DELNP/2013 A
(43) Publication Date : 19/12/2014

(54) Title of the invention : METHOD FOR PURIFICATION OF MICAFUNGIN

(51) International classification :B01D15/32,A61K31/4164,C07K7/56
(31) Priority Document No :61/477190
(32) Priority Date :20/04/2011
(33) Name of priority country :U.S.A.
(86) International Application No :PCT/EP2012/056768
Filing Date :13/04/2012
(87) International Publication No :WO 2012/143293
(61) Patent of Addition to Application Number :NA
Filing Date :NA
(62) Divisional to Application Number :NA
Filing Date :NA

(71)**Name of Applicant :**
1)XELLIA PHARMACEUTICALS APS
Address of Applicant :P.O.Box 1736 DK 2300 Copenhagen S Denmark
(72)**Name of Inventor :**
1)AASSVEEN Lene
2)DALE Eli Karin
3)HANSEN Espen Fridtjof
4)EIDE Kjersti Meldahl

(57) Abstract :
The present invention relates to a method for the purification of Micafungin.

No. of Pages : 33 No. of Claims : 27

(12) PATENT APPLICATION PUBLICATION
(19) INDIA
(22) Date of filing of Application :01/11/2013
(21) Application No.9450/DELNP/2013 A
(43) Publication Date : 19/12/2014

(54) Title of the invention : MINIMUM RETROREFLECTIVITY COMPLIANCE SYSTEM METHOD AND ASSEMBLY

(51) International classification	:G01N21/37,G01N21/29,G01N21/55
(31) Priority Document No	:13/098618
(32) Priority Date	:02/05/2011
(33) Name of priority country	:U.S.A.
(86) International Application No	:PCT/US2012/033247
Filing Date	:12/04/2012
(87) International Publication No	:WO 2012/151031
(61) Patent of Addition to Application Number	:NA
Filing Date	:NA
(62) Divisional to Application Number	:NA
Filing Date	:NA

(71)**Name of Applicant :**
1)AVERY DENNISON CORPORATON
Address of Applicant :150 N. Orange Grove Blvd. Pasadena CA 91103 U.S.A.
(72)**Name of Inventor :**
1)CHAPMAN Scott N.

(57) Abstract :
A system method and assembly for performing traffic sign inspections is provided. In one embodiment the assembly includes a first plurality of sheetings (210a b) that each have a combination of retroreflectivity and color that is different from the combination of retroreflectivity and color of each of the other first plurality of sheetings (210a b); a first clamp (240a) and second clamp (240b) for clamping one of said first plurality of sheetings (240a b) to a traffic sign; a first handheld light source (235a); and a first enclosure (200) for removably housing the first plurality of sheetings (210a b) said first and second clamps (240a b) and said first handheld light source (235a). The assembly may further include a second enclosure for removably housing a second plurality of sheetings that each has a combination of retroreflectivity and color that is different from the combination of retroreflectivity and color of each of the other second plurality of sheetings.

No. of Pages : 28 No. of Claims : 20

(12) PATENT APPLICATION PUBLICATION
(19) INDIA
(22) Date of filing of Application :01/11/2013
(21) Application No.9454/DELNP/2013 A
(43) Publication Date : 19/12/2014

(54) Title of the invention : MODULAR ELECTRICAL SWITCH

(51) International classification :H01H50/32,H01H50/04
(31) Priority Document No :NA
(32) Priority Date :NA
(33) Name of priority country :NA
(86) International Application No :PCT/EP2011/063691
Filing Date :09/08/2011
(87) International Publication No :WO 2013/020585
(61) Patent of Addition to Application Number :NA
Filing Date :NA
(62) Divisional to Application Number :NA
Filing Date :NA

(71)**Name of Applicant :**
1)SIEMENS AKTIENGESELLSCHAFT
Address of Applicant :Wittelsbacherplatz 2 80333 M¼nchen Germany
(72)**Name of Inventor :**
1)BIVALKAR Chintamani
2)RAMRAJKAR Noah
3)KURKURE Sachin

(57) Abstract :
The present invention provides an electrical switch (400) that includes a plurality of electrical switch modules (100 200) at least one actuating assembly (300) and coupling means (402) for coupling the plurality of electrical switch modules (100 200). The coupling means (402) couple the plurality of electrical switch modules (100 200) such that operation of the plurality of electrical switch modules (100 200) is substantially synchronized.

No. of Pages : 46 No. of Claims : 14

(12) PATENT APPLICATION PUBLICATION
(19) INDIA
(22) Date of filing of Application :01/11/2013
(21) Application No.9455/DELNP/2013 A
(43) Publication Date : 19/12/2014

(54) Title of the invention : PERYLENE TETRACARBOXYLIC ACID BISIMIDE DERIVATIVE N TYPE SEMICONDUCTOR PROCESS FOR PRODUCING N TYPE SEMICONDUCTOR AND ELECTRONIC DEVICE

(51) International classification :C07F7/10,H01L51/05,H01L51/30
(31) Priority Document No :2011083220
(32) Priority Date :04/04/2011
(33) Name of priority country :Japan
(86) International Application No :PCT/JP2012/059270
Filing Date :04/04/2012
(87) International Publication No :WO 2012/137853
(61) Patent of Addition to Application Number :NA
Filing Date :NA
(62) Divisional to Application Number :NA
Filing Date :NA

(71)**Name of Applicant :**
1)NATIONAL UNIVERSITY CORPORATION KAGAWA UNIVERSITY
Address of Applicant :1 1 Saiwai cho Takamatsu shi Kagawa 7608521 Japan
(72)**Name of Inventor :**
1)FUNAHASHI Masahiro
2)TAKEUCHI Nozomi

(57) Abstract :
The present invention provides a perylene tetracarboxylic acid bisimide derivative which enables the formation of an n-type semiconductor having high carrier mobility and has superior solubility. The perylene tetracarboxylic acid bisimide derivative is a perylene tetracarboxylic acid bisimide derivative represented 10 by the following chemical formula (I), a tautomer or stereoisomer of the perylene tetracarboxylic acid bisimide derivative, or a salt of the perylene tetracarboxylic acid bisimide derivative or the tautomer or stereoisomer, In the chemical formula (I), R1 to R6 each represents a hydrogen atom, 15 organooligosiloxane, or any substituent, at least one of R1 to R6 represents a monovalent substituent derived from organooligosiloxane, L1 and L2 each represents a single bond or a linking group, R7 to R10 each represents a lower alkyl group or a halogen, and o, p, q, and r each represents an integer from 0 to 2.

No. of Pages : 121 No. of Claims : 19

(12) PATENT APPLICATION PUBLICATION
(19) INDIA
(22) Date of filing of Application :01/10/2013
(21) Application No.8541/DELNP/2013 A
(43) Publication Date : 19/12/2014

(54) Title of the invention : LIQUID DETERGENT COMPOSITION

(51) International classification :C11D17/08,C11D1/02,C11D1/62
(31) Priority Document No :2011096186
(32) Priority Date :22/04/2011
(33) Name of priority country :Japan
(86) International Application No :PCT/JP2012/053313
Filing Date :14/02/2012
(87) International Publication No :WO 2012/144254
(61) Patent of Addition to Application Number :NA
Filing Date :NA
(62) Divisional to Application Number :NA
Filing Date :NA

(71)**Name of Applicant :**
1)KAO CORPORATION
Address of Applicant :14 10 Nihonbashi Kayabacho 1 chome Chuo ku Tokyo 1038210 Japan
(72)**Name of Inventor :**
1)MAKI Masataka
2)OZEKI Yohei
3)NIWANO Yu
4)MIYAKE Toshio

(57) Abstract :
The present invention discloses the liquid detergent composition containing the nonionic surfactant (A), the specific cationic surfactant (B), and the hydrogen peroxide (D) within the specific ranges, and water, wherein the component (A) contains the nonionic compound (Al) represented by the formula (Al) in an amount of 0.5 to 10%-bymass of the composition, a mass ratio of the other anionic surfactant (cl) than fatty acid or a salt thereof to the component (B), (cl) / (B), is 0 to 1, and the composition has apH of 3.0 to 7.0 at 200C, as measured in accordance with JIS K3362:1998 Section 8.3: R-O- (C2H4O)-H (Al) wherein, R represents a linear alkyl group having 12 carbon atoms, and has a primary carbon atom at which R bonds to an oxygen atom of R-O-; andx represents a mole number of ethyleneoxy group added and is an integer ranging from 2 to 5.

No. of Pages : 76 No. of Claims : 13

(12) PATENT APPLICATION PUBLICATION
(19) INDIA
(22) Date of filing of Application :01/10/2013
(21) Application No.8542/DELNP/2013 A
(43) Publication Date : 19/12/2014

(54) Title of the invention : METHOD OF REDUCING FUEL CARRIED BY AN AIRCRAFT IN FLIGHT

(51) International classification :B64C25/34
(31) Priority Document No :61/448187
(32) Priority Date :01/03/2011
(33) Name of priority country :U.S.A.
(86) International Application No :PCT/US2012/027331
Filing Date :01/03/2012
(87) International Publication No :WO 2012/134701
(61) Patent of Addition to Application Number :NA
Filing Date :NA
(62) Divisional to Application Number :NA
Filing Date :NA

(71)**Name of Applicant :**
1)BOREALIS TECHNICAL LIMITED
Address of Applicant :27 Heathway Court London England NW3 7TS U.K.
(72)**Name of Inventor :**
1)COX Isaiah Watas
2)COX Joseph J.

(57) Abstract :
A method for reducing the amount of fuel required to be carried in flight by an aircraft is provided that substantially reduces the taxi margin amount of fuel required by an aircraft thereby reducing the aircraft s weight and producing significant increases in fuel use efficiency and savings in fuel costs. The substantially reduced taxi margin amount of fuel is produced by equipping an aircraft with at least one drive wheel powered by at least one onboard drive means that cooperatively drive the aircraft on the ground during taxi between takeoff and landing without reliance on the operation of the aircraft main engines.

No. of Pages : 19 No. of Claims : 10

(12) PATENT APPLICATION PUBLICATION
(19) INDIA
(22) Date of filing of Application :01/10/2013
(21) Application No.8543/DELNP/2013 A
(43) Publication Date : 19/12/2014

(54) Title of the invention : DISK BRAKE HUB ASSEMBLY

(51) International classification :B60B27/00
(31) Priority Document No :13/077883
(32) Priority Date :31/03/2011
(33) Name of priority country :U.S.A.
(86) International Application No :PCT/US2012/031647
Filing Date :30/03/2012
(87) International Publication No :WO 2012/135739
(61) Patent of Addition to Application Number :NA
Filing Date :NA
(62) Divisional to Application Number :NA
Filing Date :NA

(71)**Name of Applicant :**
1)GUNITE CORPORATION
Address of Applicant :302 Peoples Avenue Rockford IL 61104 U.S.A.
(72)**Name of Inventor :**
1)ROOT Jeffrey T.
2)DRENTH Jasen S.
3)GROSSENBACHER John L.
4)FECHT Brian

(57) Abstract :
A brake hub assembly including a brake hub and a brake disk having a first brake surface a second brake surface spaced axially from the first brake surface and a plurality of ribs extending between the first and second brake surfaces. Where the brake hub is thermally isolated from the brake hub by various combinations of spacers torque pins torque lugs and the like.

No. of Pages : 101 No. of Claims : 86

(12) PATENT APPLICATION PUBLICATION
(19) INDIA
(22) Date of filing of Application :01/11/2013
(21) Application No.9460/DELNP/2013 A
(43) Publication Date : 19/12/2014

(54) Title of the invention : HETEROCYCLIC COMPOUNDS FOR TREATING HELMINTH INFECTIONS

(51) International classification :C07D215/12,A01P5/00
(31) Priority Document No :61/498888
(32) Priority Date :20/06/2011
(33) Name of priority country :U.S.A.
(86) International Application No :PCT/US2012/043195
Filing Date :19/06/2012
(87) International Publication No :WO 2012/177668
(61) Patent of Addition to Application Number :NA
Filing Date :NA
(62) Divisional to Application Number :NA
Filing Date :NA

(71)**Name of Applicant :**
1)E. I. DU PONT DE NEMOURS AND COMPANY
Address of Applicant :1007 Market Street Wilmington Delaware 19899 U.S.A.
(72)**Name of Inventor :**
1)LAHM George Philip
2)SMITH Benjamin Kenneth

(57) Abstract :
Disclosed are compounds of Formula 1, iV-oxides, and salts thereof, wherein L is (CR 1 R1)t,, CR1 =CR14, CºC, CR15 R15 X, XCR 15 R15 , CO, O, S(0) , NR5, CONR5, NR5CO, NR5S0 2 or S0 2NR5; X is O, S, SO, S0 2, or NR5; and Q, R1, R2, R3, R5, R1 , R1 , R14 , R15, R15 t, p, n and m are as defined in the disclosure. Also disclosed are compositions containing the compounds of Formula 1 and methods for treating helminth infections comprising administration to an animal a parasiticidally effective amount of a compound or a composition of the invention.

No. of Pages : 92 No. of Claims : 16

(12) PATENT APPLICATION PUBLICATION
(19) INDIA
(22) Date of filing of Application :01/11/2013
(21) Application No.9462/DELNP/2013 A
(43) Publication Date : 19/12/2014

(54) Title of the invention : FLOW FIELD CONFIGURATION FOR FUEL CELL PLATE

(51) International classification :H01M8/24,H01M8/04,H01M8/02
(31) Priority Document No :NA
(32) Priority Date :NA
(33) Name of priority country :NA
(86) International Application No :PCT/US2011/041548
Filing Date :23/06/2011
(87) International Publication No :WO 2012/177255
(61) Patent of Addition to Application Number :NA
Filing Date :NA
(62) Divisional to Application Number :NA
Filing Date :NA

(71)**Name of Applicant :**
1)UNITED TECHNOLOGIES CORPORATION
Address of Applicant :One Financial Plaza Hartford CT 06101 U.S.A.
(72)**Name of Inventor :**
1)MADDEN Thomas H.
2)PATTERSON Timothy W.

(57) Abstract :
A method of manufacturing a plate for a fuel cell includes the steps of providing flow channels in a fuel cell plate. Multiple fuel cell plates are joined into a cell stack assembly. A blocking plate is affixed to the fuel cell plate and at least partially obstructs the flow channels. The blocking plate is affixed to the fuel cell plate after the plates have been arranged into the cell stack assembly. The resulting fuel cell provides a fuel cell plate having a perimeter with an edge. The fuel cell plate includes flow channels extending to the edge. The blocking plate is affixed to the fuel cell plate at the edge to at least partially block the flow channel. In this manner an inexpensive fuel cell plate may be used and the blocking plate can be configured to create terminated flow channels which may be used to provide an interdigitated flow field.

No. of Pages : 15 No. of Claims : 13

(12) PATENT APPLICATION PUBLICATION
(19) INDIA
(22) Date of filing of Application :29/10/2013
(21) Application No.9354/DELNP/2013 A
(43) Publication Date : 19/12/2014

(54) Title of the invention : METHODS AND COMPOSITIONS FOR DETECTING MICROBIAL PRODUCTION OF WATER IMMISCIBLE COMPOUNDS

(51) International classification :G01N33/58,C12P5/00
(31) Priority Document No :61/486211
(32) Priority Date :13/05/2011
(33) Name of priority country :U.S.A.
(86) International Application No :PCT/US2012/037351
Filing Date :10/05/2012
(87) International Publication No :WO 2012/158466
(61) Patent of Addition to Application Number :NA
Filing Date :NA
(62) Divisional to Application Number :NA
Filing Date :NA

(71)**Name of Applicant :**
1)AMYRIS INC.
Address of Applicant :5885 Hollis Street Suite 100 Emeryville CA 94608 U.S.A.
(72)**Name of Inventor :**
1)UBERSAX Jeff
2)FRENZ Lucas

(57) Abstract :
Provided herein are methods and compositions useful for detecting the production of compounds in a cell for example a microbial cell genetically modified to produce one or more such compounds at greater yield and/or with increased persistence compared to a parent microbial cell that is not genetically modified. In some embodiments the methods comprise contacting a solution with a fluorescent dye that directly binds the recombinantly produced compound wherein the solution comprises a plurality of cells recombinantly producing the compound; and detecting the fluorescent dye under spectral conditions suitable for the selective detection of the fluorescent dye bound to the recombinantly produced compound.

No. of Pages : 72 No. of Claims : 60

(12) PATENT APPLICATION PUBLICATION
(19) INDIA
(22) Date of filing of Application :29/10/2013
(21) Application No.9356/DELNP/2013 A
(43) Publication Date : 19/12/2014

(54) Title of the invention : APPARATUS AND METHODS FOR TAR REMOVAL FROM SYNGAS

(51) International classification :C10J3/72,C10J3/84,C01B3/50
(31) Priority Document No :61/516646
(32) Priority Date :06/04/2011
(33) Name of priority country :U.S.A.
(86) International Application No :PCT/US2012/032160
Filing Date :04/04/2012
(87) International Publication No :WO 2012/138751
(61) Patent of Addition to Application Number :NA
Filing Date :NA
(62) Divisional to Application Number :NA
Filing Date :NA

(71)**Name of Applicant :**
1)INEOS BIO SA
Address of Applicant :Avenue des Uttins 3 CH 1180 Rolle Switzerland
(72)**Name of Inventor :**
1)BELL Peter S
2)KO Ching Whan
3)GOLAB Joseph
4)DESCALES Bernard
5)EYRAUD Julien

(57) Abstract :
A process and apparatus are provided for reducing content of tar in a tar containing syngas. The process includes contacting the tar containing syngas with a molecular oxygen containing gas in a first reaction zone to produce a gas mixture. The gas mixture is passed through a heat treatment zone maintained at a temperature between about 900°C to about 2000°C for a contact time of about 0.5 to about 5 seconds. In this aspect at least a portion of the tar undergoes at least partial oxidation and/or cracking to produce a hot syngas.

No. of Pages : 24 No. of Claims : 29

(12) PATENT APPLICATION PUBLICATION
(19) INDIA
(22) Date of filing of Application :30/10/2013
(21) Application No.9357/DELNP/2013 A
(43) Publication Date : 19/12/2014

(54) Title of the invention : DEPLOYMENT CATHETER

(51) International classification :A61F2/84
(31) Priority Document No :20120289772
(32) Priority Date :13/05/2011
(33) Name of priority country :U.S.A.
(86) International Application No :PCT/US2011/036549
Filing Date :13/05/2011
(87) International Publication No :WO 2012/158152
(61) Patent of Addition to Application Number :NA
Filing Date :NA
(62) Divisional to Application Number :NA
Filing Date :NA

(71)**Name of Applicant :**
1)SPIRATION INC.
Address of Applicant :6675 185th Avenue N.E. Redmond WA 98052 U.S.A.
(72)**Name of Inventor :**
1)OCONNELL Desmond
2)LILJEGREN Erik
3)DILLARD David H.
4)GONZALEZ Hugo X.

(57) Abstract :
A deployment catheter is described herein that preferably is configured to deliver a medical device such as a valve to a location in a patient such as a patient s airway. Preferably such a deployment catheter is configured to be used in conjunction with a bronchoscope. In some embodiments a locking lever is provided to reduce the likelihood of accidental deployment of the device and which resets conveniently after use to as to permit multiple device deployments.

No. of Pages : 61 No. of Claims : 22

(12) PATENT APPLICATION PUBLICATION
(19) INDIA
(22) Date of filing of Application :30/10/2013
(21) Application No.9358/DELNP/2013 A
(43) Publication Date : 19/12/2014

(54) Title of the invention : MEDICAL FOOD FOR COGNITIVE DECLINE

(51) International classification :A61K31/352,A61K31/35,A61K31/20
(31) Priority Document No :61/488003
(32) Priority Date :19/05/2011
(33) Name of priority country :U.S.A.
(86) International Application No :PCT/US2012/038720
Filing Date :18/05/2012
(87) International Publication No :WO 2012/159092
(61) Patent of Addition to Application Number :NA
Filing Date :NA
(62) Divisional to Application Number :NA
Filing Date :NA

(71)**Name of Applicant :**
1)THE REGENTS OF THE UNIVERSITY OF CALIFORNIA
Address of Applicant :1111 Franklin Street 12th Floor Oakland CA 94607 5200 U.S.A.
2)SALK INSTITUTE FOR BIOLOGICAL STUDIES
3)DEPARTMENT OF VETERANS AFFAIRS
(72)**Name of Inventor :**
1)COLE Greg M.
2)FRAUTSCHY Sally A.
3)SCHUBERT David R.
4)MAHER Pamela A.

(57) Abstract :
Nutraceutical formulations that improve cognitive function in adults diagnosed with neurodegenerative disease are provided which comprise a combination of fisetin and DHA.

No. of Pages : 22 No. of Claims : 16

(12) PATENT APPLICATION PUBLICATION
(19) INDIA
(22) Date of filing of Application :30/10/2013
(21) Application No.9359/DELNP/2013 A
(43) Publication Date : 19/12/2014

(54) Title of the invention : METHOD AND APPARATUS FOR FILTERING A LIQUID SAMPLE

(51) International classification :G01N1/28,B01D29/01,G01N35/10
(31) Priority Document No :11290290.3
(32) Priority Date :20/06/2011
(33) Name of priority country :EPO
(86) International Application No :PCT/US2012/041568
Filing Date :08/06/2012
(87) International Publication No :WO 2013/106081
(61) Patent of Addition to Application Number :NA
Filing Date :NA
(62) Divisional to Application Number :NA
Filing Date :NA

(71)**Name of Applicant :**
1)EMD MILLIPORE CORPORATION
Address of Applicant :290 Concord Road Billerica MA 01821 U.S.A.
(72)**Name of Inventor :**
1)OLIVIER Stephane
2)METZ Didier

(57) Abstract :
The invention relates to the filtering of liquid samples preferably in a laboratory environment for example for collecting micro organisms from the liquid sample for subsequent testing. The invention provides a method for filtering a liquid sample which comprises providing a blank of a deformable sheet material and a filtration medium deforming the blank to form a funnel extending above and about the filtration medium introducing the liquid sample to be filtered into the so formed funnel and filtering the liquid sample from the funnel through the filtration medium for example to a downstream receptacle. The method is accordingly based on the concept that the funnel is not or at least not completely preformed but provided in a form of a blank of a deformable material sheet which is deformed so as to form the funnel at the point and time of use during filtration.

No. of Pages : 36 No. of Claims : 16

(12) PATENT APPLICATION PUBLICATION
(19) INDIA
(22) Date of filing of Application :31/10/2013
(21) Application No.9423/DELNP/2013 A
(43) Publication Date : 19/12/2014

(54) Title of the invention : PROCESS FOR THE PREPARATION OF AN ANTIPSYCHOTIC AGENT

(51) International classification :C07D417/12
(31) Priority Document No :943/DEL/2011
(32) Priority Date :01/04/2011
(33) Name of priority country :India
(86) International Application No :PCT/IB2012/051500
Filing Date :28/03/2012
(87) International Publication No :WO 2012/131606
(61) Patent of Addition to Application Number :NA
Filing Date :NA
(62) Divisional to Application Number :NA
Filing Date :NA

(71)**Name of Applicant :**
1)RANBAXY LABORATORIES LIMITED
Address of Applicant :Head Office: 12th Floor Devika Tower 06 Nehru Place New Delhi Delhi 110019 Delhi India
(72)**Name of Inventor :**
1)JAYACHANDRA Suresh Babu
2)GAHLOT Udaibhan Singh
3)SINGH Tarun Kumar
4)KHANDURI Chandra Has

(57) Abstract :
The present invention provides a process for the preparation of an antipsychotic agent useful for the treatment of schizophrenia.

No. of Pages : 22 No. of Claims : 12

(12) PATENT APPLICATION PUBLICATION
(19) INDIA
(22) Date of filing of Application :31/10/2013
(21) Application No.9424/DELNP/2013 A
(43) Publication Date : 19/12/2014

(54) Title of the invention : MACHINE TOOL SWITCHING DEVICE

(51) International classification :G05G5/06
(31) Priority Document No :10 2011 075 196.3
(32) Priority Date :04/05/2011
(33) Name of priority country :Germany
(86) International Application No :PCT/EP2012/054573
Filing Date :15/03/2012
(87) International Publication No :WO 2012/150076
(61) Patent of Addition to Application Number :NA
Filing Date :NA
(62) Divisional to Application Number :NA
Filing Date :NA

(71)**Name of Applicant :**
1)ROBERT BOSCH GMBH
Address of Applicant :Postfach 30 02 20 70442 Stuttgart Germany
(72)**Name of Inventor :**
1)LUTZ Manfred
2)TRICK Achim
3)SCHOMISCH Thomas
4)ESENWEIN Florian

(57) Abstract :
The invention relates to a machine tool switching device, in particular for portable machine tools, comprising at least one switching unit (14a; 14b; 14c; 14d; 14e), which has at least one movably mounted operating element (16a; 16b; 16c; 16d; 16e) for actuating a mechanical, electrical and/or electronic switching element (18a; 18b; 18c; 18d; 18e), and further comprising at least one blocking device (20a; 20b; 20c; 20d; 20e) for blocking at least one movement of the operating element (16a; 16b; 16c; 16d; 16e), said blocking device comprising at least one movably mounted release element (22a; 22b; 22c, 24c; 22d; 22e), which is provided in order to lift the blockage of the operating element (16a; 16b; 16c; 16d; 16e). According to the invention, the release element (22a; 22b; 22c, 24c; 22d; 22e) is mounted on the operating element (16a; 16b; 16c; 16d; 16e) such as to be movable in a translatory manner.

No. of Pages : 26 No. of Claims : 10

(12) PATENT APPLICATION PUBLICATION
(19) INDIA
(22) Date of filing of Application :31/10/2013

(21) Application No.9425/DELNP/2013 A
(43) Publication Date : 19/12/2014

(54) Title of the invention : A BUILDING ELEMENT FOR A STRUCTURAL BUILDING PANEL

(51) International classification	:E04B2/86,E04B2/46,E04G11/00
(31) Priority Document No	:2011901361
(32) Priority Date	:11/04/2011
(33) Name of priority country	:Australia
(86) International Application No	:PCT/AU2012/000358
Filing Date	:10/04/2012
(87) International Publication No	:WO 2012/139153
(61) Patent of Addition to Application Number	:NA
Filing Date	:NA
(62) Divisional to Application Number	:NA
Filing Date	:NA

(71)**Name of Applicant :**
1)DINCEL Burak
Address of Applicant :7K Parkes Street Parramatta NSW 2150 Australia
(72)**Name of Inventor :**
1)DINCEL Burak

(57) Abstract :
A building element (12) that is an elongated extrusion of plastics material. The element (12) can be used to form straight or curved walls (11). Like elements (12) are secured together by transverse relative movement and snap engagement of flanges (22) in recesses (21). In one embodiment the element (12) has a longitudinally extending seal projection (26) that aids in sealingly connecting engaged elements (12).

No. of Pages : 12 No. of Claims : 5

(12) PATENT APPLICATION PUBLICATION
(19) INDIA
(22) Date of filing of Application :31/10/2013
(21) Application No.9426/DELNP/2013 A
(43) Publication Date : 19/12/2014

(54) Title of the invention : ZINC OXIDE PARTICLES PRODUCTION METHOD FOR SAME COSMETIC MATERIAL HEAT DISSIPATING FILLER HEAT DISSIPATING RESIN COMPOSITION HEAT DISSIPATING GREASE AND HEAT DISSIPATING COATING COMPOSITION

(51) International classification :C01G9/02,A61K8/27,A61Q1/00
(31) Priority Document No :2011-101023
(32) Priority Date :28/04/2011
(33) Name of priority country :Japan
(86) International Application No :PCT/JP2012/061282
Filing Date :26/04/2012
(87) International Publication No :WO 2012/147888
(61) Patent of Addition to Application Number :NA
Filing Date :NA
(62) Divisional to Application Number :NA
Filing Date :NA

(71)**Name of Applicant :**
1)SAKAI CHEMICAL INDUSTRY CO. LTD.
Address of Applicant :5 2 Ebisujima cho Sakai ku Sakai shi Osaka 5908502 Japan
(72)**Name of Inventor :**
1)SUEDA Satoru
2)HASHIMOTO Mitsuo
3)TERABE Atsuki
4)WATANABE Nobuo
5)MAGARA Koichiro

(57) Abstract :
To provide zinc oxide particles capaole of being suitably used as an ultraviolet-ray-shielding agent for cosmetic materials, due to having both excellent ultraviolet-ray-shielding properties and excellent dispersibility. [Solution] Zinc oxide particles having a primary particle diameter of less than 0 . 1 mpi , an aspect ratio of less than 2.5, and an oil absorption/BET specific area of no more than 1.5 ml/ 100m 2.

No. of Pages : 46 No. of Claims : 11

(12) PATENT APPLICATION PUBLICATION
(19) INDIA
(22) Date of filing of Application :31/10/2013
(21) Application No.9427/DELNP/2013 A
(43) Publication Date : 19/12/2014

(54) Title of the invention : HEXAGONAL CYLINDER SHAPED ZINC OXIDE PARTICLES PRODUCTION METHOD FOR SAME AND COSMETIC MATERIAL HEAT DISSIPATING FILLER HEAT DISSIPATING RESIN COMPOSITION HEAT DISSIPATING GREASE AND HEAT DISSIPATING COATING COMPOSITION HAVING SAME BLENDED THEREIN

(51) International classification :C01G9/02,A61K8/27,A61Q1/00
(31) Priority Document No :2011101022
(32) Priority Date :28/04/2011
(33) Name of priority country :Japan
(86) International Application No :PCT/JP2012/061281
Filing Date :26/04/2012
(87) International Publication No :WO 2012/147887
(61) Patent of Addition to Application Number :NA
Filing Date :NA
(62) Divisional to Application Number :NA
Filing Date :NA

(71)**Name of Applicant :**
1)SAKAI CHEMICAL INDUSTRY CO. LTD.
Address of Applicant :5 2 Ebisujima cho Sakai ku Sakai shi Osaka 5908502 Japan
(72)**Name of Inventor :**
1)SUEDA Satoru
2)HASHIMOTO Mitsuo
3)TERABE Atsuki
4)WATANABE Nobuo
5)MAGARA Koichiro

(57) Abstract :
To obtain hexagonal-cylinder-shaped zinc oxide particles having a specific particle diameter and a specific aspect ratio, and capable of being suitably used as a cosmetic material or a heat-dissipating material, as a result of high ultraviolet-ray-shielding properties and transparency. [Solution] Hexagonal-cylinder-shaped zinc oxide particles having a primary particle diameter of at least 0.1 μm but less than 0.5 μm and an aspect ratio of less than 2.5.

No. of Pages : 53 No. of Claims : 9

(12) PATENT APPLICATION PUBLICATION
(19) INDIA
(22) Date of filing of Application :31/10/2013
(21) Application No.9428/DELNP/2013 A
(43) Publication Date : 19/12/2014

(54) Title of the invention : METHOD OF PRODUCING SUBSTANCES WITH SUPERSATURATED GAS TRANSDERMAL DELIVERY THEREOF AND USES THEREOF

(51) International classification	:A61M37/00,A61M5/307,A61M5/28
(31) Priority Document No	:NA
(32) Priority Date	:NA
(33) Name of priority country	:NA
(86) International Application No Filing Date	:PCT/US2011/033060 :19/04/2011
(87) International Publication No	:WO 2012/144990
(61) Patent of Addition to Application Number Filing Date	:NA :NA
(62) Divisional to Application Number Filing Date	:NA :NA

(71)**Name of Applicant :**
1)INVISIDERM LLC
Address of Applicant :790 E. Colorado Blvd. 9th Floor Pasadena CA 91101 U.S.A.
(72)**Name of Inventor :**
1)KISS Norbert

(57) Abstract :
The present specification disclosed a noninvasive transdermal delivery device that relates generally to a handheld mechanical apparatus for noninvasive transdermal administration of gas, small to large water- soluble (hydrophilic) pharmaceutical agents, vitamins, and other therapeutic agents. Components of such delivery devices, methods of producing a substance comprising a supersaturated amount of a dissolved gas, as well as, methods of administering a therapeutic agent using such delivery devices and methods of treating a disease or condition using such delivery devices are also disclosed.

No. of Pages : 38 No. of Claims : 15

(12) PATENT APPLICATION PUBLICATION
(19) INDIA
(22) Date of filing of Application :01/11/2013
(21) Application No.9444/DELNP/2013 A
(43) Publication Date : 19/12/2014

(54) Title of the invention : STABLE HIGH STRENGTH OIL IN WATER EMULSIONS

(51) International classification :A01N25/00
(31) Priority Document No :61/482716
(32) Priority Date :05/05/2011
(33) Name of priority country :U.S.A.
(86) International Application No :PCT/US2012/036422
Filing Date :04/05/2012
(87) International Publication No :WO 2012/151455
(61) Patent of Addition to Application Number :NA
Filing Date :NA
(62) Divisional to Application Number :NA
Filing Date :NA

(71)**Name of Applicant :**
1)DOW AGROSCIENCES LLC
Address of Applicant :9330 Zionsville Road Indianapolis IN 46268 U.S.A.
(72)**Name of Inventor :**
1)ZHANG Hong
2)TANK Holger
3)KEENEY Franklin N.
4)LI Mei
5)TAVARES DO NASCIMENTO Marco Antonio

(57) Abstract :
Novel high strength herbicidal oil in water emulsions containing a water soluble salt of glyphosate and an oil soluble herbicide active ingredient show enhanced stability to oil phase coalescence and active ingredient crystallization by the use of specific surfactants and water immiscible organic solvents. A stable high strength herbicidal oil in water emulsion is disclosed that includes a discontinuous oil phase comprising with respect to the oil in water emulsion from about 25 grams active ingredient per liter (g ai/L) to about 300 g ailL of at least one oil soluble herbicide active ingredient and from 0 grams per liter (giL) to about 300 giL of a water immiscible organic solvent.

No. of Pages : 17 No. of Claims : 20

(12) PATENT APPLICATION PUBLICATION
(19) INDIA
(22) Date of filing of Application :01/11/2013
(21) Application No.9445/DELNP/2013 A
(43) Publication Date : 19/12/2014

(54) Title of the invention : LARGE EFFECTIVE AREA OPTICAL FIBERS

(51) International classification :G02B6/028,G02B6/036
(31) Priority Document No :61/487351
(32) Priority Date :18/05/2011
(33) Name of priority country :U.S.A.
(86) International Application No :PCT/US2012/037887
Filing Date :15/05/2012
(87) International Publication No :WO 2012/158667
(61) Patent of Addition to Application Number :NA
Filing Date :NA
(62) Divisional to Application Number :NA
Filing Date :NA

(71)**Name of Applicant :**
1)CORNING INCORPORATED
Address of Applicant :1 Riverfront Plaza Corning New York 14831 U.S.A.
(72)**Name of Inventor :**
1)LI Ming Jun

(57) Abstract :
Large effective area optical fibers are dis closed. In one embodiment, an optical fiber includes a glass core and a glass cladding surrounding and in direct contact FIG. 1 with the glass core. The glass core may include a radius R from about 12 m to about 50 m ; a graded refractive index profile with an alpha value greater than or equal to about 1.0 and less than about 10 at a wavelength of 1550 nm; and a maximum relative refractive index D MAc%from about 0.2% to about 0.75% relative to the glass cladding. An effective area of the core may be greater than or equal to about 150 m 2 such that the core supports the propagation and transmis sion of an optical signal with X modes at a wavelength of 1550 nm, wherein X is an integer greater than 1 and less than or equal to 110. The glass cladding may include a maximum relative refractive index D IMAC% such that A MAX% > D IMAC% · The optical fiber has an RMS pulse broadening of less than or equal to about 0.15 ns/km at a wavelength of 1550 nm.

No. of Pages : 31 No. of Claims : 21

(12) PATENT APPLICATION PUBLICATION
(19) INDIA
(22) Date of filing of Application :01/11/2013
(21) Application No.9446/DELNP/2013 A
(43) Publication Date : 19/12/2014

(54) Title of the invention : TRANSPARENT GLASS SUBSTRATE HAVING A COATING OF CONSECUTIVE LAYERS

(51) International classification :C03C17/34,C03C17/36
(31) Priority Document No :BE 2011/0317
(32) Priority Date :24/05/2011
(33) Name of priority country :Belgium
(86) International Application No :PCT/EP2012/059552
Filing Date :23/05/2012
(87) International Publication No :WO 2012/160075
(61) Patent of Addition to Application Number :NA
Filing Date :NA
(62) Divisional to Application Number :NA
Filing Date :NA

(71)**Name of Applicant :**
1)AGC GLASS EUROPE
Address of Applicant :R&D Centre Chausse de La Hulpe 166 B 1170 Bruxelles (Watermael Boitsfort) Belgium
(72)**Name of Inventor :**
1)TIXHON Eric
2)DIDIER Delphine

(57) Abstract :
The invention relates to a transparent glass substrate having a coating including, in order: a first reflected color neutralization layer; a low-emissivity second layer essentially made up of Sn02:F and having a thickness between 455 and 800 nm; and a third layer that is essentially made up of SiOx, x being less than or equal to 2, and has a thickness between 40 and 65 nm or between 140 and 180 nm. The invention also relates to a double glass sheet and a triple glass sheet, manufactured from such a glass substrate, and to a window comprising said glass sheets.

No. of Pages : 22 No. of Claims : 15

(12) PATENT APPLICATION PUBLICATION
(19) INDIA
(22) Date of filing of Application :01/11/2013
(21) Application No.9448/DELNP/2013 A
(43) Publication Date : 19/12/2014

(54) Title of the invention : HYDRAULIC DESALINATION DEVICE AND METHOD

(51) International classification :C02F1/04,B01D1/00,B01D5/00
(31) Priority Document No :61/486596
(32) Priority Date :16/05/2011
(33) Name of priority country :U.S.A.
(86) International Application No :PCT/US2012/031250
Filing Date :29/03/2012
(87) International Publication No :WO 2012/158264
(61) Patent of Addition to Application Number :NA
Filing Date :NA
(62) Divisional to Application Number :NA
Filing Date :NA

(71)**Name of Applicant :**
1)PIERRE Marvin
Address of Applicant :4360 Beasley Court Virginia Beach VA 23462 U.S.A.
(72)**Name of Inventor :**
1)PIERRE Marvin

(57) Abstract :
A hydraulic desalination system device and method includes lowering the pressure of liquid saltwater to the vaporization point by generating flow through piping and accompanying infrastructure that may include valves that impart friction and control flow capturing the vapor condensing the vapor using higher pressure supplied by the ambient surroundings producing freshwater recovering the heat released during condensation by maintaining ambient temperatures greater than vapor temperatures and then using the recovered heat to enhance and perpetuate vaporization in a cyclical manner. A novel spring loaded pump for pumping fluids may facilitate the process.

No. of Pages : 58 No. of Claims : 24

(12) PATENT APPLICATION PUBLICATION
(19) INDIA
(22) Date of filing of Application :01/11/2013
(21) Application No.9449/DELNP/2013 A
(43) Publication Date : 19/12/2014

(54) Title of the invention : DEVICE AND METHOD FOR AUTOMATIC SWING CONTROL

(51) International classification :A63G9/00
(31) Priority Document No :NA
(32) Priority Date :NA
(33) Name of priority country :NA
(86) International Application No :PCT/CN2011/000772
Filing Date :03/05/2011
(87) International Publication No :WO 2012/149662
(61) Patent of Addition to Application Number :NA
Filing Date :NA
(62) Divisional to Application Number :NA
Filing Date :NA

(71)**Name of Applicant :**
1)CHEN Cheng ming
Address of Applicant :No.20 Ln. 28 Dongmen Rd. East Dist. Taichung City Taiwan 401 China
(72)**Name of Inventor :**
1)CHEN Cheng ming

(57) Abstract :
A device and a method for automatic swing control are disclosed. The device and method are used for the automatic swing control of an overhang. The device for automatic swing control comprises an actuator and a movable block. The movable block comprises a 5 hanger and an angle sensing device. The hanger is pivotably mounted on the lower end of the movable block and is used to suspend the overhang. The angle sensing device is electrically connected to the actuator, and used to sense the movement parameters of the hanger, and starts the selective rotation of the actuator when the swing angle is less than a preset value, so that when the hanger is at its predicted highest swing position, the movable block moves 10 toward the direction where the hanger is about to move after the hanger passes its actual highest swing position to drag the overhang to swing.

No. of Pages : 24 No. of Claims : 10

(12) PATENT APPLICATION PUBLICATION
(19) INDIA
(22) Date of filing of Application :01/11/2013

(21) Application No.9436/DELNP/2013 A
(43) Publication Date : 19/12/2014

(54) Title of the invention : COMPOSITION USEFUL FOR THE TREATMENT OF LIPID METABOLISM DISORDERS

(51) International classification	:A61K36/062,A61K36/899,A61K31/045
(31) Priority Document No	:11164526.3
(32) Priority Date	:03/05/2011
(33) Name of priority country	:EPO
(86) International Application No	:PCT/EP2012/057428
Filing Date	:24/04/2012
(87) International Publication No	:WO 2012/150146
(61) Patent of Addition to Application Number	:NA
Filing Date	:NA
(62) Divisional to Application Number	:NA
Filing Date	:NA

(71)**Name of Applicant :**
1)SIGMA TAU Industrie Farmaceutiche Riunite S.p.A.
Address of Applicant :Viale Shakespeare 47 I 00144 Rome Italy
(72)**Name of Inventor :**
1)KOVERECH Aleardo
2)VIRMANI Ashraf

(57) Abstract :
The present invention relates to a composition useful for the treatment of lipid metabolism disorders comprising one or more of the following active ingredients: (a) extract of rice fermented with Monascus purpureus (b) at least one omega 3 fatty acid (c) L carnitine or a salt thereof; and one or more of the following active ingredients: (d) at least one policosanol or a natural extract containing policosanols; (e) resveratrol or a natural extract containing resveratrol; (f) Coenzyme Q10; and (g) at least one vitamin.

No. of Pages : 33 No. of Claims : 15

(12) PATENT APPLICATION PUBLICATION
(19) INDIA
(22) Date of filing of Application :01/11/2013
(21) Application No.9438/DELNP/2013 A
(43) Publication Date : 19/12/2014

(54) Title of the invention : METHOD FOR OBTAINING METALS AND RARE EARTH METALS FROM SCRAP

(51) International classification :C22B5/10,C22B5/12,C22B7/00
(31) Priority Document No :10 2011 100 995.0
(32) Priority Date :10/05/2011
(33) Name of priority country :Germany
(86) International Application No :PCT/EP2012/001893
Filing Date :03/05/2012
(87) International Publication No :WO 2012/152408
(61) Patent of Addition to Application Number :NA
Filing Date :NA
(62) Divisional to Application Number :NA
Filing Date :NA

(71)**Name of Applicant :**
1)ECOLOOP GMBH
Address of Applicant :Geheimrat Ebert Str. 12 38640 Goslar Germany
(72)**Name of Inventor :**
1)STUMPF Thomas
2)BAUMANN Leonhard
3)M–LLER Roland

(57) Abstract :
The method is used to obtain metals, noble metals, and rare earth metals from scrap. The aim of the invention is to provide a method that allows an efficient recovery even from electronic scrap. This is achieved in that the scrap and carbon-containing materials (A) are oxidized with oxygen-containing gases (11) in the presence of alkaline materials under overall reducing conditions with an overall lambda of

No. of Pages : 23 No. of Claims : 23

(12) PATENT APPLICATION PUBLICATION
(19) INDIA
(22) Date of filing of Application :01/11/2013
(21) Application No.9439/DELNP/2013 A
(43) Publication Date : 19/12/2014

(54) Title of the invention : METHOD OF INHIBITING OR CONTROLLING RELEASE OF WELL TREATMENT AGENT

(51) International classification :C09K8/28,C09K8/36,C09K8/035
(31) Priority Document No :13/162461
(32) Priority Date :16/06/2011
(33) Name of priority country :U.S.A.
(86) International Application No :PCT/US2012/038048
Filing Date :16/05/2012
(87) International Publication No :WO 2012/173728
(61) Patent of Addition to Application Number :NA
Filing Date :NA
(62) Divisional to Application Number :NA
Filing Date :NA

(71)**Name of Applicant :**
1)BAKER HUGHES INCORPORATED
Address of Applicant :2929 Allen Parkway Suite 2100 Houston Texas 77019 U.S.A.
(72)**Name of Inventor :**
1)CAWIEZEL Kay
2)GUPTA D.V. Satyanarayana

(57) Abstract :
A microemulsion delivery system containing a well treatment agent in a water in oil microemulsion may be used for well remediation as well as in other treatment operations including stimulation acidizing and drilling. In addition the water in oil microemulsion delivery system may be used to clean surface equipment and downhole equipment.

No. of Pages : 27 No. of Claims : 25

(12) PATENT APPLICATION PUBLICATION
(19) INDIA
(22) Date of filing of Application :01/11/2013
(21) Application No.9440/DELNP/2013 A
(43) Publication Date : 19/12/2014

(54) Title of the invention : METHOD FOR PRODUCING AN OBJECT AND CONNECTING ARRANGEMENT THEREFOR

(51) International classification :B29C65/36,F16B5/06,B29C65/58
(31) Priority Document No :10 2011 105 340.2
(32) Priority Date :21/06/2011
(33) Name of priority country :Germany
(86) International Application No :PCT/EP2012/061016
Filing Date :11/06/2012
(87) International Publication No :WO 2012/175358
(61) Patent of Addition to Application Number :NA
Filing Date :NA
(62) Divisional to Application Number :NA
Filing Date :NA

(71)**Name of Applicant :**
1)NEWFREY LLC
Address of Applicant :1207 Drummond Plaza Newark Delaware 19711 U.S.A.
(72)**Name of Inventor :**
1)SALTENBERGER Reimar
2)HAHN Ernst Ludwig
3)LAUTNER Siegfried
4)WIMMER Karin
5)BRIEDEN Thomas

(57) Abstract :
Method for producing an object (10) of complex form having the steps of: providing a first component (20) and providing a second component (22) positioning the first and the second component (20 22) one above the other so that a connecting surface (34) of the first component (20) is in contact with a connecting surface (36) of the second component (22) and connecting the first component (20) and the second component (22). In this case the first and the second component (20 22) are connected together at least two connecting points (40 42) wherein a tolerance compensating device (50) which provides tolerance compensation in a direction parallel to the connecting surfaces (34 36) is provided.

No. of Pages : 30 No. of Claims : 16

(12) PATENT APPLICATION PUBLICATION
(19) INDIA
(22) Date of filing of Application :04/11/2013
(21) Application No.9480/DELNP/2013 A
(43) Publication Date : 19/12/2014

(54) Title of the invention : REDUCTION OF METAL OXIDES USING A GAS STREAM CONTAINING BOTH HYDROCARBON AND HYDROGEN

(51) International classification :C21B5/06,C21B13/00
(31) Priority Document No :A785/2011
(32) Priority Date :30/05/2011
(33) Name of priority country :Austria
(86) International Application No :PCT/EP2012/058360
Filing Date :07/05/2012
(87) International Publication No :WO 2012/163628
(61) Patent of Addition to Application Number :NA
Filing Date :NA
(62) Divisional to Application Number :NA
Filing Date :NA

(71)**Name of Applicant :**
1)SIEMENS VAI METALS TECHNOLOGIES GMBH
Address of Applicant :Turmstrae 44 A 4031 Linz Austria
(72)**Name of Inventor :**
1)MILLNER Robert
2)BOEHM Christian

(57) Abstract :
The invention relates to a process for reducing metal oxides using a gas stream containing both hydrocarbon and hydrogen. In the process the gas stream containing both hydrocarbon and hydrogen is separated into a hydrogen-rich fraction and a hydrocarbon-rich fraction. Then at least one sub-quantity of the hydrocarbon-rich fraction is subjected to at least one operation from the group - oxidation using technically pure oxygen, - reforming using CO2 and H2O. Then, it is introduced at least as a component of a reduction gas into a reduction unit containing the metal oxides, hi this process the hydrocarbon content is set by the at least one operation from said group in such a manner that the hydrocarbon content in the reduction gas on entry into the reduction unit is below 12% by volume. The invention also relates to a device for carrying outsuch a process.

No. of Pages : 35 No. of Claims : 12

(12) PATENT APPLICATION PUBLICATION
(19) INDIA
(22) Date of filing of Application :30/10/2013
(21) Application No.9374/DELNP/2013 A
(43) Publication Date : 19/12/2014

(54) Title of the invention : HEAT SPREADER FOR ELECTRICAL COMPONENTS

(51) International classification :H01L23/36
(31) Priority Document No :61/482014
(32) Priority Date :03/05/2011
(33) Name of priority country :U.S.A.
(86) International Application No :PCT/US2012/036230
Filing Date :03/05/2012
(87) International Publication No :WO 2012/151347
(61) Patent of Addition to Application Number :NA
Filing Date :NA
(62) Divisional to Application Number :NA
Filing Date :NA

(71)**Name of Applicant :**
1)VISHAY DALE ELECTRONICS INC.
Address of Applicant :1122 23rd Street Columbus Nebraska 68601 U.S.A.
(72)**Name of Inventor :**
1)SMITH Clark L.
2)WYATT Todd L.
3)VEIK Thomas L.

(57) Abstract :
A heat spreader for a resistive element is provided the heat spreader having a body portion that is arranged over a top surface of the resistive element and electrically insulated from the resistive element. The heat spreader also includes one or more leg portion that extends from the body portion and are associated with the heat sink in a thermally conductive relationship.

No. of Pages : 31 No. of Claims : 20

(12) PATENT APPLICATION PUBLICATION
(19) INDIA
(22) Date of filing of Application :30/10/2013
(21) Application No.9375/DELNP/2013 A
(43) Publication Date : 19/12/2014

(54) Title of the invention : SEAT WITH WHEELS

(51) International classification :A61G5/00,A61G3/02
(31) Priority Document No :2011-089332
(32) Priority Date :13/04/2011
(33) Name of priority country :Japan
(86) International Application No :PCT/JP2012/059897
Filing Date :11/04/2012
(87) International Publication No :WO 2012/141212
(61) Patent of Addition to Application Number :NA
Filing Date :NA
(62) Divisional to Application Number :NA
Filing Date :NA

(71)**Name of Applicant :**
1)TOYOTA SHATAI KABUSHIKI KAISHA
Address of Applicant :100Kanayama Ichiriyama cho Kariya shi Aichi 4480002 Japan
(72)**Name of Inventor :**
1)BANDOU Nobuyuki

(57) Abstract :
A braking lever (76) is attached to the rear wheel stay (42) holding the rear wheel (40). The braking lever (76) is incorporated in a braking device (70) that can be operated when the wheel (40) is in a use position, and thus the braking lever (76) includes a braking portion (76b). When the rear wheel (40) is stowed in a stored position, a stopper portion (76c) of the braking lever (76), serving as a stopper, is pressed against the rear wheel (40) to restrain rotation of the rear wheel (40).

No. of Pages : 48 No. of Claims : 6

(12) PATENT APPLICATION PUBLICATION
(19) INDIA
(22) Date of filing of Application :30/10/2013
(21) Application No.9376/DELNP/2013 A
(43) Publication Date : 19/12/2014

(54) Title of the invention : HIGH PRECISION SYNCHRONIZED MEASURED VALUE ACQUISITION

(51) International classification :G01D21/02,G01D5/244
(31) Priority Document No :11169504.5
(32) Priority Date :10/06/2011
(33) Name of priority country :EPO
(86) International Application No :PCT/EP2012/060688
Filing Date :06/06/2012
(87) International Publication No :WO 2012/168294
(61) Patent of Addition to Application Number :NA
Filing Date :NA
(62) Divisional to Application Number :NA
Filing Date :NA

(71)**Name of Applicant :**
1)HEXAGON TECHNOLOGY CENTER GMBH
Address of Applicant :Heinrich Wild Strasse CH 9435 Heerbrugg Switzerland
(72)**Name of Inventor :**
1)FRITSCH Robert

(57) Abstract :
The invention relates to a method for wire bound, high precision, temporal synchronization of measured value acquisition in a measurement system designed as a space coordinate measurement apparatus having a plurality of measurement sub-units with signaling of a time for triggering the measured value acquisition by means of a trigger signal and with the respective acquisition and intermediate storage of a measured value in the measurement subunit at the time determined by the trigger signal. Each acquisition of the measured value is carried out in the measurement sub-units in a time quantified manner with a local timing signal of the measurement sub-unit. A phase synchronization of the local timing signals of the measurement sub-units is then carried out using a synchronization signal in order to ensure simultaneity of the acquisition of the measured value in the measurement sub-units with a temporal uncertainty which does not exceed a phase jitter of the synchronization, and which is in any case less than 90% of a period duration of the local timing signal.

No. of Pages : 49 No. of Claims : 15

(12) PATENT APPLICATION PUBLICATION
(19) INDIA
(22) Date of filing of Application :30/10/2013
(21) Application No.9377/DELNP/2013 A
(43) Publication Date : 19/12/2014

(54) Title of the invention : METHOD AND APPARATUS FOR REDUCING BATTERY PASSIVATION IN A METER READING MODULE

(51) International classification :H01M10/44,H01M10/48,H01M10/42
(31) Priority Document No :13/101,203
(32) Priority Date :05/05/2011
(33) Name of priority country :U.S.A.
(86) International Application No :PCT/US2012/035948
Filing Date :01/05/2012
(87) International Publication No :WO 2012/151185
(61) Patent of Addition to Application Number :NA
Filing Date :NA
(62) Divisional to Application Number :NA
Filing Date :NA

(71)**Name of Applicant :**
1)SENSUS USA INC.
Address of Applicant :8601 Six Forks Road Suite 700 Raleigh North Carolina 27615 U.S.A.
(72)**Name of Inventor :**
1)HEATH Nicholas

(57) Abstract :
The teachings herein disclose a method and apparatus for preventing excessive battery passivation in an electronic meter reading module. The module operates in a low power state most of the time. The low power state is interrupted at defined transmit times wherein the module temporarily turns on or otherwise activates an included communication transmitter for wireless transmission of data to a remote node. Because of its low current draw during the times between data transmissions the module s battery is vulnerable to passivation layer buildup. Advantageously however the module is configured to perform dummy activations of its transmitter at times other than the defined transmit times e.g. in the intervals between data transmissions. These dummy activations are not for data transmission but rather are temporary activations of the relatively high power transmitter for reducing passivation layer buildup on the battery in advance of a next data transmission.

No. of Pages : 25 No. of Claims : 18

(12) PATENT APPLICATION PUBLICATION
(19) INDIA
(22) Date of filing of Application :30/10/2013
(21) Application No.9378/DELNP/2013 A
(43) Publication Date : 19/12/2014

(54) Title of the invention : METHOD AND DEVICE FOR MEASURING BLEND RATE OF BIODIESEL FUEL BLENDED LIGHT OIL AND ESTER RATE OF FAME

(51) International classification :G01N33/22,G01N31/00
(31) Priority Document No :PI 2011001507
(32) Priority Date :04/04/2011
(33) Name of priority country :Malaysia
(86) International Application No :PCT/JP2011/077238
Filing Date :25/11/2011
(87) International Publication No :WO 2012/137387
(61) Patent of Addition to Application Number :NA
Filing Date :NA
(62) Divisional to Application Number :NA
Filing Date :NA

(71)**Name of Applicant :**
1)YANMAR CO. LTD.
Address of Applicant :1 9 Tsurunocho Kita ku Osaka shi Osaka 5308311 Japan
(72)**Name of Inventor :**
1)OTOMO Yuki
2)KAY KIAN HEE
3)BEVERLY KAH WAYNEE
4)KAMARUDDIN KUDUMPOR
5)SITI NORBARIA SALLY
6)JOERIK SARAN

(57) Abstract :
The purpose of the present invention is to provide a method and a device for measuring the blend rate of FAME in a biodiesel fuel blended light oil and the ester rate which is the rate of triglycerides in FAME. Disclosed are a method and a device for measuring the blend rate of a biodiesel fuel blended light oil and the ester rate of FAME wherein: a cylindrical upright transparent vessel constitutes an analysis vessel (1); the upper section of the analysis vessel (1) is formed as a large diameter vessel section (1a) and employed as a reagent introducing section; the lower section of the analysis vessel is formed as a small diameter vessel section (1b) and marked with reading graduations for reading the liquid level boundary; a lid (3) is provided on the upper end of the large diameter vessel section (1a); and a biodiesel fuel blended light oil and a reagent (A) or neat FAME and a reagent (B) are introduced the lid (3) is closed the vessel is shaken and left still for a given period of time and then the liquid level boundary is read off by using the reading graduations marked on the small diameter vessel section (1b).

No. of Pages : 40 No. of Claims : 9

(12) PATENT APPLICATION PUBLICATION
(19) INDIA
(22) Date of filing of Application :31/10/2013
(21) Application No.9429/DELNP/2013 A
(43) Publication Date : 19/12/2014

(54) Title of the invention : PYRUVATE KINASE ACTIVATORS FOR USE IN THERAPY

(51) International classification :A61K31/4965,A61K31/497,A61P7/06
(31) Priority Document No :61/482171
(32) Priority Date :03/05/2011
(33) Name of priority country :U.S.A.
(86) International Application No :PCT/US2012/036412
Filing Date :03/05/2012
(87) International Publication No :WO 2012/151451
(61) Patent of Addition to Application Number :NA
Filing Date :NA
(62) Divisional to Application Number :NA
Filing Date :NA

(71)**Name of Applicant :**
1)AGIOS PHARMACEUTICALS INC.
Address of Applicant :38 Sidney Street Cambridge MA 02139 U.S.A.
(72)**Name of Inventor :**
1)SU Shin San Michael

(57) Abstract :
Described herein are methods for using compounds that activate pyruvate kinase.

No. of Pages : 125 No. of Claims : 30

(12) PATENT APPLICATION PUBLICATION
(19) INDIA
(22) Date of filing of Application :04/11/2013
(21) Application No.9487/DELNP/2013 A
(43) Publication Date : 19/12/2014

(54) Title of the invention : PICOLINAMIDO PROPANOIC ACID DERIVATIVES USEFUL AS GLUCAGON RECEPTOR ANTAGONISTS

(51) International classification :C07D213/81,A61K31/4412,A61P31/10
(31) Priority Document No :61/488842
(32) Priority Date :23/05/2011
(33) Name of priority country :U.S.A.
(86) International Application No :PCT/US2012/039171
Filing Date :23/05/2012
(87) International Publication No :WO 2012/162407
(61) Patent of Addition to Application Number :NA
Filing Date :NA
(62) Divisional to Application Number :NA
Filing Date :NA

(71)**Name of Applicant :**
1)JANSSEN PHARMACEUTICA NV
Address of Applicant :Turnhoutseweg 30 B 2340 Beerse Belgium
(72)**Name of Inventor :**
1)CHAKRAVARTY Devraj
2)KREUTTER Kevin
3)POWELL Mark
4)SHOOK Brian
5)SONG Fengbin
6)XU Guozhang
7)YANG Shyh ming
8)ZHANG Rui
9)ZHAO Bao ping

(57) Abstract :
The present invention is directed to picolanmido propanoic acid derivatives pharmaceutical compositions containing them and their use in the treatment and / or prevention of disorders and conditions ameliorated by antagonizing one or more glucagon receptors including for example metabolic diseases such as Type II diabetes mellitus and obesity.

No. of Pages : 238 No. of Claims : 27

(12) PATENT APPLICATION PUBLICATION
(19) INDIA
(22) Date of filing of Application :04/11/2013
(21) Application No.9488/DELNP/2013 A
(43) Publication Date : 19/12/2014

(54) Title of the invention : ELECTRODE PLATE GROUP UNIT FOR SECONDARY BATTERY AND METHOD FOR MANUFACTURING SAME

(51) International classification	:H01M10/04,H01M2/26,H01M2/30
(31) Priority Document No	:2011117265
(32) Priority Date	:25/05/2011
(33) Name of priority country	:Japan
(86) International Application No	:PCT/JP2012/063426
Filing Date	:25/05/2012
(87) International Publication No	:WO 2012/161302
(61) Patent of Addition to Application Number	:NA
Filing Date	:NA
(62) Divisional to Application Number	:NA
Filing Date	:NA

(71)**Name of Applicant :**
1)SHIN KOBE ELECTRIC MACHINERY CO.LTD.
Address of Applicant :8 1Akashi cho Chuo ku Tokyo 1040044 Japan
(72)**Name of Inventor :**
1)MISHIRO Yuichiro
2)IIDA Yukio

(57) Abstract :
Provided are an electrode plate group unit for a second ary battery, in which electrode plates and collector members can b e r e liably affixed and i n which a large current can flow, and a method for manufacturing the same. Conductive members (35, 36) which, i n addi tion t o a current pathway passing through collector parts (16, 18) and terminal constituent parts (15, 17) of collector members (1 1, 13), form a separate current pathway in which the current from part o f the collect or parts (16, 18) t o the terminal constituent parts (15, 17) flows are mechanically and electrically connected to the collector parts (16, 18) and the terminal constituent parts (15, 17).

No. of Pages : 36 No. of Claims : 9

(12) PATENT APPLICATION PUBLICATION
(19) INDIA
(22) Date of filing of Application :04/11/2013
(21) Application No.9489/DELNP/2013 A
(43) Publication Date : 19/12/2014

(54) Title of the invention : CATALYTIC HYDROGENATION OF FLUOROOLEFINS ALPHA ALUMINA SUPPORTED PALLADIUM COMPOSITIONS AND THEIR USE AS HYDROGENATION CATALYSTS

(51) International classification :C07C17/354,C07C19/08,B01J23/44
(31) Priority Document No :61/486472
(32) Priority Date :16/05/2011
(33) Name of priority country :U.S.A.
(86) International Application No :PCT/US2012/038221
Filing Date :16/05/2012
(87) International Publication No :WO 2012/158848
(61) Patent of Addition to Application Number :NA
Filing Date :NA
(62) Divisional to Application Number :NA
Filing Date :NA

(71)**Name of Applicant :**
1)E. I. du Pont de Nemours and Company
Address of Applicant :1007 Market Street Wilmington Delaware 19899 U.S.A.
(72)**Name of Inventor :**
1)CHEUNG Patricia
2)SIEVERT Allen Capron
3)LAMARCA Concetta

(57) Abstract :
A hydro genation process is disclosed. The process involves reacting a fluoroolefm with H2 in a reaction zone in the presence of a palladium catalyst to produce a hydrofluoroalkane product, wherein the palladium catalyst comprises palladium sup - ported on a carrier wherein the palladium concentration is from about 0.001 wt % to about 0.2 wt % based on the total weight of the palladium and the carrier. Also disclosed is a palladium catalyst composition consisting essentially of palladium supported on - AI2O3 wherein the palladium concentration is from about 0.001 wt % to about 0.2 wt % based on the total weight of the palladium and the -AI 2O3. Also disclosed is a hydrogenation process comprising reacting a fluoroolefm with H2 in a reaction zone in the pres ence of a palladium catalyst to produce a hydrofluoroalkane product, characterized by: the palladium catalyst consisting essentially of palladium supported on -AI 2O3 wherein the palladium concentration is from about 0.001 wt % to about 0.2 wt % based on the total weight of the palladium and the -AI2O3. Also disclosed is a hydrogenation process comprising (a) passing a mixture compris ing fluoroolefm and H2 through a bed of palladium catalyst in a reaction zone wherein the palladium catalyst comprises palladium supported on a carrier; and (b) producing a hydrofluoroalkane product; characterized by: the palladium catalyst in the front of the bed having lower palladium concentration than the palladium catalyst in the back of the bed.

No. of Pages : 30 No. of Claims : 24

(12) PATENT APPLICATION PUBLICATION
(19) INDIA
(22) Date of filing of Application :04/11/2013

(21) Application No.9490/DELNP/2013 A
(43) Publication Date : 19/12/2014

(54) Title of the invention : TISSUE GRAFT ANCHORING

(51) International classification :A61B17/04,A61B17/06,A61F2/08
(31) Priority Document No :13/106239
(32) Priority Date :12/05/2011
(33) Name of priority country :U.S.A.
(86) International Application No :PCT/US2012/037253
Filing Date :10/05/2012
(87) International Publication No :WO 2012/154922
(61) Patent of Addition to Application Number :NA
Filing Date :NA
(62) Divisional to Application Number :NA
Filing Date :NA

(71)**Name of Applicant :**
1)SMITH & NEPHEW INC.
Address of Applicant :1450 Brooks Road Memphis TN 38116 U.S.A.
(72)**Name of Inventor :**
1)ASTORINO Steven William

(57) Abstract :
A method of securing a tissue graft in cludes providing a fixation member having a suture at r tached thereto, attaching the suture to the tissue graft, and adjusting the length of the suture between the fixation member and the tissue graft by pulling an end of the su ture. A fixation device includes a member defining at least H two openings and a suture passing through the at least two openings. The suture has a first end received within the su ture through an open second end of the suture and exits the suture through a first opening in the suture between the first and second suture ends. A fixation device includes a suture having two closed loop portions that pass through openings in a member. A first suture end is received with in the suture through a first opening in the suture, and a second suture end is received within the suture through a second opening in the suture.

No. of Pages : 22 No. of Claims : 15

(12) PATENT APPLICATION PUBLICATION
(19) INDIA
(22) Date of filing of Application :01/11/2013
(21) Application No.9456/DELNP/2013 A
(43) Publication Date : 19/12/2014

(54) Title of the invention : PLUG CONNECTOR

(51) International classification	:F16L37/00,F16L37/098,F16L37/133
(31) Priority Document No	:10 2011 077 178.6
(32) Priority Date	:08/06/2011
(33) Name of priority country	:Germany
(86) International Application No	:PCT/EP2012/059666
Filing Date	:24/05/2012
(87) International Publication No	:WO 2012/168081
(61) Patent of Addition to Application Number	:NA
Filing Date	:NA
(62) Divisional to Application Number	:NA
Filing Date	:NA

(71)**Name of Applicant :**
1)ROBERT BOSCH GMBH
Address of Applicant :Postfach 30 02 20 70442 Stuttgart Germany
(72)**Name of Inventor :**
1)EHRHARDT Uwe
2)SCHIEBER STITZ Marion
3)BOTSCHKA Michael
4)DELISIMUNOVIC Blazenka

(57) Abstract :
A plug connector (1) is used for lines (11) carrying media, in particular hydraulic lines of fuel injection systems. The plug connector (1) comprises a plug body (6), having a catch element (15), and a securing clip (18) movable relative to the plug body (6) into a locking position, the securing clip (18) securing the catch element (15) when in the locking position. Securing wings (20, 21) are also provided for the securing clip (18). When in a securing position, the securing wings (20, 21) protect the securing clip (18) against the displacement ofsaid securing clip (18) into the locking position.

No. of Pages : 14 No. of Claims : 8

(12) PATENT APPLICATION PUBLICATION
(19) INDIA
(22) Date of filing of Application :01/11/2013
(21) Application No.9457/DELNP/2013 A
(43) Publication Date : 19/12/2014

(54) Title of the invention : SUPPLY TANK AND FUNCTIONAL UNIT THEREFOR

(51) International classification :F01N3/20
(31) Priority Document No :102011075726.0
(32) Priority Date :12/05/2011
(33) Name of priority country :Germany
(86) International Application No :PCT/EP2012/055314
Filing Date :26/03/2012
(87) International Publication No :WO 2012/152498
(61) Patent of Addition to Application Number :NA
Filing Date :NA
(62) Divisional to Application Number :NA
Filing Date :NA

(71)**Name of Applicant :**
1)ROBERT BOSCH GMBH
Address of Applicant :Postfach 30 02 20 70442 Stuttgart Germany
(72)**Name of Inventor :**
1)HAEBERER Rainer
2)LOLAS Georgios

(57) Abstract :
The invention relates to a functional unit (20) of a supply tank (19) of an injection device (15) for a liquid reducing agent in an exhaust gas post-treatment device (3) comprising a catalyst (11) for selective catalytic reduction (SCR). The functional unit (20) is essentially equipped to convey the reducing agent from the supply tank (19) in a targeted manner and to prevent the reducing agent from freezing at least in the region of the functional unit (20) at extremely low temperatures. The functional unit (20) is designed such that it is not damaged when the reducing agent freezes.

No. of Pages : 16 No. of Claims : 12

(12) PATENT APPLICATION PUBLICATION
(19) INDIA
(22) Date of filing of Application :01/11/2013
(21) Application No.9458/DELNP/2013 A
(43) Publication Date : 19/12/2014

(54) Title of the invention : ELEVATOR CAR ASSIGNMENT STRATEGY THAT LIMITS A NUMBER OF STOPS PER PASSENGER

(51) International classification :B66B1/18,B66B1/44
(31) Priority Document No :NA
(32) Priority Date :NA
(33) Name of priority country :NA
(86) International Application No :PCT/US2011/044188
Filing Date :15/07/2011
(87) International Publication No :WO 2013/012410
(61) Patent of Addition to Application Number :NA
Filing Date :NA
(62) Divisional to Application Number :NA
Filing Date :NA

(71)**Name of Applicant :**
1)OTIS ELEVATOR COMPANY
Address of Applicant :10 Farm Springs Farmington Connecticut 06032 U.S.A.
(72)**Name of Inventor :**
1)FARUKI Tarique
2)STANLEY Jannah A.
3)CHAPMAN Ashley

(57) Abstract :
An exemplary method of controlling an elevator system includes determining that a new passenger requests elevator service from a departure floor to a destination floor. Any candidate elevator cars are ranked. A number of stops for each assigned passenger for a ranked candidate elevator car is determined if the new passenger were assigned to that car. A determination is made whether any ranked candidate elevator car is a qualified car that can accept the new passenger and limit a number of stops for each passenger assigned to that car to a desired maximum number of stops. The new passenger is assigned to a qualified car that has a most favorable ranking of any qualified cars.

No. of Pages : 17 No. of Claims : 20

(12) PATENT APPLICATION PUBLICATION
(19) INDIA
(22) Date of filing of Application :01/11/2013
(21) Application No.9459/DELNP/2013 A
(43) Publication Date : 19/12/2014

(54) Title of the invention : POLYMER WAX COMPOSITIONS METHODS OF MAKING AND USING THE SAME

(51) International classification :C08K5/101
(31) Priority Document No :61/488508
(32) Priority Date :20/05/2011
(33) Name of priority country :U.S.A.
(86) International Application No :PCT/US2012/038383
Filing Date :17/05/2012
(87) International Publication No :WO 2012/162093
(61) Patent of Addition to Application Number :NA
Filing Date :NA
(62) Divisional to Application Number :NA
Filing Date :NA

(71)**Name of Applicant :**
1)THE PROCTER & GAMBLE COMPANY
Address of Applicant :One Procter & Gamble Plaza Cincinnati OH 45202 U.S.A.
(72)**Name of Inventor :**
1)ALLEN William Maxwell
2)BOND Eric Bryan
3)NODA Isao

(57) Abstract :
Compositions comprising thermoplastic polymers and waxes are disclosed where the wax is dispersed throughout the thermoplastic polymer. Also disclosed are methods of making these compositions.

No. of Pages : 32 No. of Claims : 9

(12) PATENT APPLICATION PUBLICATION
(19) INDIA
(22) Date of filing of Application :04/11/2013
(21) Application No.9493/DELNP/2013 A
(43) Publication Date : 19/12/2014

(54) Title of the invention : THERMOELECTRIC DEVICE

(51) International classification :H01L35/24
(31) Priority Document No :1107372.3
(32) Priority Date :04/05/2011
(33) Name of priority country :U.K.
(86) International Application No :PCT/GB2012/050954
Filing Date :01/05/2012
(87) International Publication No :WO 2012/150449
(61) Patent of Addition to Application Number :NA
Filing Date :NA
(62) Divisional to Application Number :NA
Filing Date :NA

(71)**Name of Applicant :**
1)BAE SYSTEMS PLC
Address of Applicant :6 Carlton Gardens London SW1Y 5AD U.K.
(72)**Name of Inventor :**
1)HAQ Sajad
2)DUNLEAVY Michael
3)HUCKER Martyn John
4)DAVIES Joseph Maurice

(57) Abstract :
The invention relates to a thermoelectric device for generating electrical currents exploiting the Seebeck effect more specifically a structural thermoelectric device which can replace a structural component of a body. The structural thermoelectric device comprising a first conductor layer a second conductor layer and located therebetween a polymer thermocouple layer comprising reinforcement means formed from a structural support wherein the internal surface of said support comprises at least one layer of at least one conducting polymer. The reinforcement means is a porous material with a plurality of voids wherein the internal surfaces of the voids are coated with a conducting polymer which is capable of providing the Peltier effect.

No. of Pages : 23 No. of Claims : 16

(12) PATENT APPLICATION PUBLICATION
(19) INDIA
(22) Date of filing of Application :30/10/2013
(21) Application No.9379/DELNP/2013 A
(43) Publication Date : 19/12/2014

(54) Title of the invention : AN ELECTRICAL CONDUCTOR

(51) International classification :H01L21/04,H01L29/16
(31) Priority Document No :2011/02820
(32) Priority Date :14/04/2011
(33) Name of priority country :South Africa
(86) International Application No :PCT/IB2012/051830
Filing Date :13/04/2012
(87) International Publication No :WO 2012/140611
(61) Patent of Addition to Application Number :NA
Filing Date :NA
(62) Divisional to Application Number :NA
Filing Date :NA

(71)**Name of Applicant :**
1)SAGE WISE 66 (PTY) LTD
Address of Applicant :6 Glenhove Road Melrose Estate 2196 Johannesburg South Africa
(72)**Name of Inventor :**
1)PRINS Johan Frans

(57) Abstract :
The invention provides circuits and electronic devices which comprise an electrical flow path at least part of which is formed by a body of a substrate material at least part of which is a doped part having a surface and implanted atoms at or below the surface at least part of the surface defining a low resistance section of the electrical flow path.

No. of Pages : 24 No. of Claims : 15

(12) PATENT APPLICATION PUBLICATION
(19) INDIA
(22) Date of filing of Application :04/11/2013
(21) Application No.9500/DELNP/2013 A
(43) Publication Date : 19/12/2014

(54) Title of the invention : SYSTEM FOR GENERATING POWER FROM A SYNGAS FERMENTATION PROCESS

(51) International classification :C10J3/86,C12P7/06,C01B3/00
(31) Priority Document No :61/516646
(32) Priority Date :06/04/2011
(33) Name of priority country :U.S.A.
(86) International Application No :PCT/US2012/032180
Filing Date :04/04/2012
(87) International Publication No :WO 2012/138766
(61) Patent of Addition to Application Number :NA
Filing Date :NA
(62) Divisional to Application Number :NA
Filing Date :NA

(71)**Name of Applicant :**
1)INEOS BIO SA
Address of Applicant :Avenue des Uttins 3 CH 1180 Rolle Switzerland
(72)**Name of Inventor :**
1)BELL Peter S
2)OCFEMIA Kim
3)BERNSTEAD Stephen John
4)PARKER Graeme

(57) Abstract :
A system and process is provided for generating power from a syngas fermentation process. The process includes contacting hot syngas having a temperature above about 1400F with cooled syngas to produce a pre cooled syngas having a temperature of 1400F or less at an inlet of a waste heat boiler. A waste heat boiler receives the pre cooled syngas and is effective for producing waste heat boiler high pressure steam and a cooled syngas.

No. of Pages : 19 No. of Claims : 34

(12) PATENT APPLICATION PUBLICATION
(19) INDIA
(22) Date of filing of Application :04/11/2013
(21) Application No.9501/DELNP/2013 A
(43) Publication Date : 19/12/2014

(54) Title of the invention : METHOD AND DEVICE FOR FRACTIONATING BULK MATERIAL

(51) International classification :B07B1/28,B07B1/42,B07B4/08
(31) Priority Document No :11164663.4
(32) Priority Date :03/05/2011
(33) Name of priority country :EPO
(86) International Application No :PCT/EP2012/057986
Filing Date :02/05/2012
(87) International Publication No :WO 2012/150239
(61) Patent of Addition to Application Number :NA
Filing Date :NA
(62) Divisional to Application Number :NA
Filing Date :NA

(71)**Name of Applicant :**
1)BHLER AG
Address of Applicant :Gupfenstrasse 5 CH 9240 Uzwil Switzerland
(72)**Name of Inventor :**
1)MOOSMANN J¼rgen
2)F„SSLER Bruno

(57) Abstract :
The method for fractionating bulk material comprises the step of feeding the bulk material to at least one screen in a device (1) comprising at least one housing (10) with an inner space for receiving the screen. The housing (10) has at least one inlet (13) for feeding the bulk material and at least one outlet for discharging at least one fraction of the bulk material. The housing (10) has a roof (15) and a floor (16) with at least a gyrating mass (17) respectively arranged on the roof and the floor. The device (1) also has at least one mechanical coupling means wherein the gyrating masses are coupled to one another by the mechanical coupling means (21) arranged outside the inner space and can be driven. The device (1) has a drive means for driving the mechanical coupling means. The method also comprises the step of setting the housing (10) in an oscillating motion by means of driving the gyrating masses. In a further method step the fractionating of the bulk material is performed by means of the screen. Subsequently a discharge of at least one of the fractions of the bulk material from the housing takes place through the outlet.

No. of Pages : 35 No. of Claims : 15

(12) PATENT APPLICATION PUBLICATION
(19) INDIA
(22) Date of filing of Application :04/11/2013
(21) Application No.9502/DELNP/2013 A
(43) Publication Date : 19/12/2014

(54) Title of the invention : FLAME RETARDANT SEMI AROMATIC POLYAMIDE COMPOSITION AND MOULDED PRODUCTS MADE THEREFROM

(51) International classification :C08L77/00,C08L77/02,C08L77/06
(31) Priority Document No :11166068.4
(32) Priority Date :13/05/2011
(33) Name of priority country :EPO
(86) International Application No :PCT/EP2012/058417
Filing Date :08/05/2012
(87) International Publication No :WO 2012/156227
(61) Patent of Addition to Application Number :NA
Filing Date :NA
(62) Divisional to Application Number :NA
Filing Date :NA

(71)**Name of Applicant :**
1)DSM IP ASSETS B.V.
Address of Applicant :Het Overloon 1 NL 6411 TE Heerlen Netherlands
(72)**Name of Inventor :**
1)BURGT VAN DER Frank Peter Theodorus Johannes

(57) Abstract :
The invention relates to a flame retardant polyamide composition comprising (A) a semi crystalline semi aromatic polyamide (B) a semi crystalline aliphatic polyamide and (C) a halogen free flame retardant system comprising a metal salt of a (di)phosphinic acid a melamine condensation product a polyphosphate salt of melamine or a polyphosphate salt of a melamine condensation product or any mixture thereof; wherein the weight ratio of (A):(B) is in the range of 75:25 98:2 and (B) has a number average molecular weight (Mn) of more than 7500g/mol. The invention also relates to an article made of the flame retardant polyamide composition.

No. of Pages : 24 No. of Claims : 15

(12) PATENT APPLICATION PUBLICATION
(19) INDIA
(22) Date of filing of Application :04/11/2013
(21) Application No.9503/DELNP/2013 A
(43) Publication Date : 19/12/2014

(54) Title of the invention : USE OF A FEED COMPOSITION FOR REDUCING METHANE EMISSION IN RUMINANTS AND/OR TO IMPROVE RUMINANT PERFORMANCE

(51) International classification :A23K1/16,A23K1/17,A23K1/18
(31) Priority Document No :11167748.0
(32) Priority Date :26/05/2011
(33) Name of priority country :EPO
(86) International Application No :PCT/EP2012/059826
Filing Date :25/05/2012
(87) International Publication No:WO 2012/160191
(61) Patent of Addition to Application Number :NA
Filing Date :NA
(62) Divisional to Application Number :NA
Filing Date :NA

(71)**Name of Applicant :**
1)DSM IP ASSETS B.V.
Address of Applicant :Het Overloon 1 NL 6411 The Heerlen Netherlands
(72)**Name of Inventor :**
1)DUVAL Stephane
2)IMMIG Irmgard
3)KINDERMANN Maik
4)WEBER Gilbert

(57) Abstract :
The present invention relates to the field of reduction of methane emission in ruminants. Particularly it relates to the use of a feed composition or a feed additive comprising at least one antibiotic and at least one organic molecule substituted at any position with at least one nitrooxy group for reducing the production of methane emanating from the digestive activities of ruminants and/or to improve the ruminant performance.

No. of Pages : 27 No. of Claims : 18

(12) PATENT APPLICATION PUBLICATION
(19) INDIA
(22) Date of filing of Application :29/10/2013
(21) Application No.9341/DELNP/2013 A
(43) Publication Date : 19/12/2014

(54) Title of the invention : INTRAVASCULAR DELIVERY OF NANOPARTICLE COMPOSITIONS AND USES THEREOF

(51) International classification :A61K38/38,A61K9/51,A61K31/436
(31) Priority Document No :61/518084
(32) Priority Date :28/04/2011
(33) Name of priority country :U.S.A.
(86) International Application No :PCT/US2012/035626
Filing Date :27/04/2012
(87) International Publication No :WO 2012/149451
(61) Patent of Addition to Application Number :NA
Filing Date :NA
(62) Divisional to Application Number :NA
Filing Date :NA

(71)**Name of Applicant :**
1)ABRAXIS BIOSCIENCE LLC
Address of Applicant :11755 Wilshire Boulevard Suite 2100 Los Angeles CA 90025 U.S.A.
2)MERCATOR MEDSYSTEMS INC.
(72)**Name of Inventor :**
1)SEWARD Kirk
2)DESAI Neil P.

(57) Abstract :
The present invention provides methods of delivering a composition comprising nanoparticles that comprise a macrolide and an albumin by directly injecting the nanoparticle composition into the blood vessel wall or the tissue surrounding the blood vessel wall. The methods can be used for inhibiting negative remodeling or vascular fibrosis in the blood vessel and are useful for treating various diseases.

No. of Pages : 50 No. of Claims : 41

(12) PATENT APPLICATION PUBLICATION
(19) INDIA
(22) Date of filing of Application :29/10/2013
(21) Application No.9342/DELNP/2013 A
(43) Publication Date : 19/12/2014

(54) Title of the invention : PEPTIDE WHICH CAN INDUCE ANTIBODY CAPABLE OF RECOGNIZING STEREOSTRUCTURE OF HIV

(51) International classification	:C07K14/155,A61K39/21,A61P31/18
(31) Priority Document No	:2011-082813
(32) Priority Date	:04/04/2011
(33) Name of priority country	:Japan
(86) International Application No	:PCT/JP2012/002312
Filing Date	:03/04/2012
(87) International Publication No	:WO 2012/137479
(61) Patent of Addition to Application Number	:NA
Filing Date	:NA
(62) Divisional to Application Number	:NA
Filing Date	:NA

(71)**Name of Applicant :**
1)NATIONAL UNIVERSITY CORPORATION TOKYO MEDICAL AND DENTAL UNIVERSITY
Address of Applicant :5 45 Yushima 1 chome Bunkyo ku Tokyo 1138510 Japan
(72)**Name of Inventor :**
1)TAMAMURA Hirokazu
2)NARUMI Tetsuo
3)NOMURA Wataru
4)HASHIMOTO Chie
5)KOMANO Jun A.
6)MIYAUCHI Kosuke

(57) Abstract :
The purpose of the present invention is to provide a peptide which can induce an excellent or novel neutralizing antibody against an HIV, and thereby prevent or treat HIV infection or expand choices of the prevention or treatment. A means for achieving the purpose is characterized by using a peptide which can induce an antibody capable of recognizing the stereo structrue of an HIV, wherein the peptide can recognize a trimeric region in C34 and is characterized in that three molecules of a derivative of a helical region C34 peptide located on the C-terminal side of a transmembrane protein gp4 1 of an HIV particle are bound together through a template compound that has three equivalent linker structures in a C 3 symmetric manner.

No. of Pages : 57 No. of Claims : 15

(12) PATENT APPLICATION PUBLICATION
(19) INDIA
(22) Date of filing of Application :29/10/2013
(21) Application No.9344/DELNP/2013 A
(43) Publication Date : 19/12/2014

(54) Title of the invention : HEMOSTATIC COMPOSITIONS

(51) International classification :A61K38/36,A61K38/39,A61P7/04
(31) Priority Document No :11305492.8
(32) Priority Date :27/04/2011
(33) Name of priority country :EPO
(86) International Application No :PCT/EP2012/057647
Filing Date :26/04/2012
(87) International Publication No :WO 2012/146655
(61) Patent of Addition to Application Number :NA
Filing Date :NA
(62) Divisional to Application Number :NA
Filing Date :NA

(71)**Name of Applicant :**
1)BIOMUP
Address of Applicant :8 Alle Ir¨ne Joliot Curie F 69800 Saint Priest France
(72)**Name of Inventor :**
1)GAGNIEU Christian
2)FOREST Patricia
3)PICOT Sylvain

(57) Abstract :
The invention relates to a hemostatic composition in powder form comprising collagen of the fibrillar type comprising a content of fibrous collagen and/or fibrillar collagen of at least 70% by weight relative to the total weight of the collagen, and at least one monosaccharide, and optionally, at least one compound selected from coagulation factors and glycosaminoglycans. The invention further relates to a method for preparing such composition, and to a unit comprising such composition and a spraying device.

No. of Pages : 36 No. of Claims : 17

(12) PATENT APPLICATION PUBLICATION
(19) INDIA
(22) Date of filing of Application :29/10/2013
(21) Application No.9345/DELNP/2013 A
(43) Publication Date : 19/12/2014

(54) Title of the invention : A SKIN PUNCTURING APPARATUS FOR USE IN A NON SURGICAL METHOD FOR ERADICATION OF TATTOOS

(51) International classification :A61M5/32
(31) Priority Document No :212262
(32) Priority Date :11/04/2011
(33) Name of priority country :Israel
(86) International Application No :PCT/IL2012/000135
Filing Date :29/03/2012
(87) International Publication No :WO 2012/140643
(61) Patent of Addition to Application Number :NA
Filing Date :NA
(62) Divisional to Application Number :NA
Filing Date :NA

(71)**Name of Applicant :**
1)HAWK MEDICAL TECHNOLOGIES LTD.
Address of Applicant :5 Haarad Street Ramat HaChayal 6110102 Tel Aviv Israel
(72)**Name of Inventor :**
1)DANENBERG Noam

(57) Abstract :
The invention is a skin puncturing apparatus for use in a non surgical method for eradication of a tattoo from an area of skin. The apparatus comprises: (a) a handle section comprising a motor and gear assembly for causing a reciprocating motion to a shaft connected to the gear assembly; (b) a barrel section surrounding the shaft the first end of the barrel section attached to the handle and the second end of the barrel section having a tip adapted to be placed in contact with the area of skin; (c) a bundle of needles attached by means of a needles holder to the distal end of the shaft; (d) an inlet body comprising an inlet port through which cleaning solution is introduced into the tip located at the lower edge of the barrel section.

No. of Pages : 24 No. of Claims : 7

(12) PATENT APPLICATION PUBLICATION
(19) INDIA
(22) Date of filing of Application :29/10/2013
(21) Application No.9346/DELNP/2013 A
(43) Publication Date : 19/12/2014

(54) Title of the invention : DEVICE AND METHOD FOR THE FRICTION STIR WELDING OF AN ASSEMBLY FOR STORING ELECTRICITY

(51) International classification :B23K20/12,H01M2/20
(31) Priority Document No :1153430
(32) Priority Date :20/04/2011
(33) Name of priority country :France
(86) International Application No :PCT/EP2012/057112
Filing Date :19/04/2012
(87) International Publication No :WO 2012/143414
(61) Patent of Addition to Application Number :NA
Filing Date :NA
(62) Divisional to Application Number :NA
Filing Date :NA

(71)**Name of Applicant :**
1)BLUE SOLUTIONS
Address of Applicant :Odet F 29500 Ergue Gaberic France
(72)**Name of Inventor :**
1)VIGNERAS Erwan

(57) Abstract :
The invention relates to a method for connecting two energy storage assemblies (10) together, each energy storage assembly including a sealed metal housing, in which: a connector strip (30), which is sized so as to contact the end surface of each of the housings, is positioned on the end surfaces (24) of two housings arranged side by side; and the strip is friction-stir welded to each of the housings.

No. of Pages : 18 No. of Claims : 11

(12) PATENT APPLICATION PUBLICATION
(19) INDIA
(22) Date of filing of Application :04/11/2013
(21) Application No.9473/DELNP/2013 A
(43) Publication Date : 19/12/2014

(54) Title of the invention : THERAPEUTIC CANINE IMMUNOGLOBULINS AND METHODS OF USING THE SAME

(51) International classification :C07K16/22,C07K16/46
(31) Priority Document No :61/483481
(32) Priority Date :06/05/2011
(33) Name of priority country :U.S.A.
(86) International Application No :PCT/GB2012/051008
Filing Date :08/05/2012
(87) International Publication No :WO 2012/153126
(61) Patent of Addition to Application Number :NA
Filing Date :NA
(62) Divisional to Application Number :NA
Filing Date :NA

(71)**Name of Applicant :**
1)NVIP PTY LTD
Address of Applicant :9 Meaden Street Southbank Victoria 3006 Australia
(72)**Name of Inventor :**
1)GEARING David

(57) Abstract :
A method of preparing a canine antibody suitable for use in the therapeutic treatment of a canine is provided. In particular there is provided immunoglobulins which can be selected for the characteristic of whether they mediate downstream complement mediated immune activation when bound to a target antigen. Canine derived antibodies comprising specific heavy chain isotypes are provided. The invention extends to the use of the immunoglobulins of the invention in methods of treating conditions such as pain inflammatory conditions and cancerous conditions in a canine.

No. of Pages : 95 No. of Claims : 48

(12) PATENT APPLICATION PUBLICATION
(19) INDIA
(22) Date of filing of Application :04/11/2013
(21) Application No.9474/DELNP/2013 A
(43) Publication Date : 19/12/2014

(54) Title of the invention : POLYPROPYLENE RESIN COMPOSITION

(51) International classification :C08L23/12,C08K5/00,C08L53/02
(31) Priority Document No :2011117914
(32) Priority Date :26/05/2011
(33) Name of priority country :Japan
(86) International Application No :PCT/JP2012/057719
Filing Date :26/03/2012
(87) International Publication No :WO 2012/160869
(61) Patent of Addition to Application Number :NA
Filing Date :NA
(62) Divisional to Application Number :NA
Filing Date :NA

(71)**Name of Applicant :**
1)SUZUKI MOTOR CORPORATION
Address of Applicant :300 Takatsuka Cho Minami Ku Hamamatsu Shi Shizuoka 4328611 Japan
(72)**Name of Inventor :**
1)NAGASHIMA Hiroaki
2)KIKUCHI Kayo

(57) Abstract :
A polypropylene resin composition, including: 75-90 wt.% of polypropylene resin as a matrix, 7-15 wt.% of hydrogenated styrene- bu tadiene-styrene copolymer elastomer (A) having a 5 styrene content of 18-42 wt.%, and 3-10 wt.% of hydrogenated styrene-butadiene-styrene copolymer elastomer (B) having a styrene content of 12-15 wt.%. The polypropylene resin composition has an excellent scratch resistance compatible with impact resistance, and outstanding melt-moldability, and is 10 therefore suitable for providing a colored-resin molding compound.

No. of Pages : 26 No. of Claims : 8

(12) PATENT APPLICATION PUBLICATION
(19) INDIA
(22) Date of filing of Application :04/11/2013
(21) Application No.9475/DELNP/2013 A
(43) Publication Date : 19/12/2014

(54) Title of the invention : POLYMER COMPOSITION FOR ELECTRICAL DEVICES

(51) International classification :C08L23/00
(31) Priority Document No :11164779.8
(32) Priority Date :04/05/2011
(33) Name of priority country :EPO
(86) International Application No :PCT/EP2012/058078
Filing Date :03/05/2012
(87) International Publication No :WO 2012/150285
(61) Patent of Addition to Application Number :NA
Filing Date :NA
(62) Divisional to Application Number :NA
Filing Date :NA

(71)**Name of Applicant :**
1)BOREALIS AG
Address of Applicant :IZD Tower Wagramerstrasse 17 19 A 1220 Vienna Austria
(72)**Name of Inventor :**
1)ANDERSSON Johan
2)ENGLUND Villgot
3)HAGSTRAND Per Ola
4)NILSSON Ulf
5)SMEDBERG Annika
6)STEFFL Thomas
7)WOLFSCHWENGER Johannes

(57) Abstract :
The invention relates to a polymer composition to the use of the composition for producing an electrical device as well as to a cable surrounded by at least one layer comprising the polymer composition.

No. of Pages : 59 No. of Claims : 20

(12) PATENT APPLICATION PUBLICATION
(19) INDIA
(22) Date of filing of Application :04/11/2013
(21) Application No.9476/DELNP/2013 A
(43) Publication Date : 19/12/2014

(54) Title of the invention : POLYMER COMPOSITION FOR ELECTRICAL DEVICES

(51) International classification :C08K3/00,C08K3/26,C08L23/00
(31) Priority Document No :11164782.2
(32) Priority Date :04/05/2011
(33) Name of priority country :EPO
(86) International Application No :PCT/EP2012/058079
Filing Date :03/05/2012
(87) International Publication No :WO 2012/150286
(61) Patent of Addition to Application Number :NA
Filing Date :NA
(62) Divisional to Application Number :NA
Filing Date :NA

(71)**Name of Applicant :**
1)BOREALIS AG
Address of Applicant :IZD Tower Wagramerstrasse 17 19 A 1220 Vienna Austria
(72)**Name of Inventor :**
1)ENGLUND Villgot
2)HAGSTRAND Per Ola

(57) Abstract :
The invention relates to a use of a polymer composition preferably in electrical devices as well as to a cable surrounded by at least one layer comprising the polymer composition.

No. of Pages : 46 No. of Claims : 15

(12) PATENT APPLICATION PUBLICATION
(19) INDIA
(22) Date of filing of Application :04/11/2013
(21) Application No.9477/DELNP/2013 A
(43) Publication Date : 19/12/2014

(54) Title of the invention : POLYMER COMPOSITION FOR ELECTRICAL DEVICES

(51) International classification :C08K3/00,C08K3/26,C08K5/00
(31) Priority Document No :11164780.6
(32) Priority Date :04/05/2011
(33) Name of priority country :EPO
(86) International Application No:PCT/EP2012/058080
Filing Date :03/05/2012
(87) International Publication No :WO 2012/150287
(61) Patent of Addition to Application Number :NA
Filing Date :NA
(62) Divisional to Application Number :NA
Filing Date :NA

(71)**Name of Applicant :**
1)BOREALIS AG
Address of Applicant :IZD Tower Wagramerstrasse 17 19 A 1220 Vienna Austria
(72)**Name of Inventor :**
1)ANDERSSON Johan
2)ENGLUND Villgot
3)HAGSTRAND Per Ola
4)NILSSON Ulf
5)SMEDBERG Annika
6)STEFFL Thomas

(57) Abstract :
The invention relates to a polymer composition with improved electrical properties and to a use thereof preferably in electrical devices as well as to a cable surrounded by at least one layer comprising the polymer composition.

No. of Pages : 48 No. of Claims : 16

(12) PATENT APPLICATION PUBLICATION
(19) INDIA
(22) Date of filing of Application :04/11/2013
(21) Application No.9478/DELNP/2013 A
(43) Publication Date : 19/12/2014

(54) Title of the invention : OPTICAL DATA CAPTURE OF EXERCISE DATA IN FURTHERANCE OF A HEALTH SCORE COMPUTATION

(51) International classification :G06F19/00
(31) Priority Document No :61/486658
(32) Priority Date :16/05/2011
(33) Name of priority country :U.S.A.
(86) International Application No :PCT/EP2012/058946
Filing Date :14/05/2012
(87) International Publication No :WO 2012/156374
(61) Patent of Addition to Application Number :NA
Filing Date :NA
(62) Divisional to Application Number :NA
Filing Date :NA

(71)**Name of Applicant :**
1)dacadoo ag
Address of Applicant :Othmarstrasse 8 CH 8008 Zurich Switzerland
(72)**Name of Inventor :**
1)OHNEMUS Peter
2)NAEF Andre

(57) Abstract :
A computer implemented method for managing health related data captures an image from a display of an exercise machine using a camera has the images processed to extract the text data from the captured images and analyzes the text data to identify information relating to extrinsic physical activity performed by a person at the exercise machine. The results are stored in memory and a profile specific to the person is updated. The profile comprises a log of past exercise activity that allows the person to track his or her activity and progress and overall health. The profile can be accessed by the person through a portal such as using a smart phone or a computer program or web browser. The results can be combined with other data to arrive at a health score which can be published through the portal while personal data remains masked from public inspection.

No. of Pages : 88 No. of Claims : 12

(12) PATENT APPLICATION PUBLICATION
(19) INDIA
(22) Date of filing of Application :04/11/2013
(21) Application No.9494/DELNP/2013 A
(43) Publication Date : 19/12/2014

(54) Title of the invention : METHOD FOR MITIGATING THE FORMATION OF BY PRODUCTS DURING THE PRODUCTION OF HALOALKANE COMPOUNDS

(51) International classification	:C07C17/275,C07C19/01,B01J23/745
(31) Priority Document No	:61/492931
(32) Priority Date	:03/06/2011
(33) Name of priority country	:U.S.A.
(86) International Application No	:PCT/US2012/039922
Filing Date	:30/05/2012
(87) International Publication No	:WO 2012/166759
(61) Patent of Addition to Application Number	:NA
Filing Date	:NA
(62) Divisional to Application Number	:NA
Filing Date	:NA

(71)**Name of Applicant :**
1)HONEYWELL INTERNATIONAL INC.
Address of Applicant :Patent Services M/S AB/2B 101 Columbia Road P.O. Box 2245 Morristown New Jersey 07962 2245 U.S.A.
(72)**Name of Inventor :**
1)CLOSE Joshua
2)WANG Haiyou
3)TUNG Hsueh Sung

(57) Abstract :
Disclosed is a process for the manufacture of haloalkane compounds and more particularly an improved process for the manufacture of the compound 1,1,1,3,3 penta chloropropane (HCC 240fa) which mitigates the formation of by products from vinyl chloride (CH=CHCl). The present invention is also useful in the manufacture of other haloalkane compounds such as HCC 250 and HCC 360. One embodiment of the invention comprises a method for mitigating 1 1 3 3 5 5 hexachloropentane and 1 1 1 3 5 5 hexachloropentane formation in the HCC 240fa manufacturing process in which FeCl is introduced to a reactor only after the start up phase has ended and a continuous operation has started. In a preferred embodiment pre chelated FeCl which is concentrated in a catalyst recovery column is introduced to reactor after the continuous operation has started.

No. of Pages : 18 No. of Claims : 10

(12) PATENT APPLICATION PUBLICATION
(19) INDIA
(22) Date of filing of Application :04/11/2013
(21) Application No.9495/DELNP/2013 A
(43) Publication Date : 19/12/2014

(54) Title of the invention : TURBINE NOZZLE GUIDE VANE ASSEMBLY IN A TURBOMACHINE

(51) International classification :F01D5/18,F01D5/30,F01D9/04
(31) Priority Document No :1153928
(32) Priority Date :06/05/2011
(33) Name of priority country :France
(86) International Application No :PCT/FR2012/051000
Filing Date :04/05/2012
(87) International Publication No :WO 2012/153049
(61) Patent of Addition to Application Number :NA
Filing Date :NA
(62) Divisional to Application Number :NA
Filing Date :NA

(71)**Name of Applicant :**
1)SNECMA
Address of Applicant :2 boulevard du Gnral Martial Valin F 75015 Paris France
(72)**Name of Inventor :**
1)SANDELIS Denis Jean Maurice
2)HERNANDEZ Didier Hippolyte

(57) Abstract :
The invention relates to a sectorized nozzle guide vane assembly for a turbomachine tur bine, comprising two sectorized annular platfbrms, an internai one (62) and an external one, which are connected by radial blades (63), at least one of th¨se platfbrms (62) comprising, in the vicinity of its upstream end, a plurality of air passage orifices (64) distributed about the circumference of the said platform (62) and opening at their opposite ends to the blades (63) into a circumferential annular cavity (60) of the platform sector (62) which is closed by a plate (66) fixed to the platform sector and pierced with cooling air supply orifices (68).

No. of Pages : 15 No. of Claims : 10

(12) PATENT APPLICATION PUBLICATION
(19) INDIA
(22) Date of filing of Application :04/11/2013
(21) Application No.9496/DELNP/2013 A
(43) Publication Date : 19/12/2014

(54) Title of the invention : INK AND PRINTING PROCESS

(51) International classification :C09D11/00
(31) Priority Document No :1107803.7
(32) Priority Date :11/05/2011
(33) Name of priority country :U.K.
(86) International Application No :PCT/GB2012/051000
Filing Date :08/05/2012
(87) International Publication No :WO 2012/153119
(61) Patent of Addition to Application Number :NA
Filing Date :NA
(62) Divisional to Application Number :NA
Filing Date :NA

(71)**Name of Applicant :**
1)FUJIFILM IMAGING COLORANTS INC.
Address of Applicant :233 Cherry Lane New Castle Delaware 19720 U.S.A.
(72)**Name of Inventor :**
1)CORDWELL Janette
2)HOLMES Marie
3)DOUBLE Philip
4)POPAT Ajay

(57) Abstract :
An ink comprising an encapsulated particulate solid and a liquid vehicle wherein: I) the encapsulated particulate solid comprises a particulate solid encapsulated with a cross-linked dispersant shell; and II) the ink comprises the components: a.from 0.1 to 20 parts of the encapsulated particulate solid; b.from 20 to 40 parts of glycerol; c.from 1 to 30 parts of ethylene glycol; d.from 0 to 20 parts of 2-pyrrolidone; e.from 0.01 to 3 parts of surfactant; ffrom 0 to 10 parts of water-soluble polymer; g.from 0 to 20 parts of polymer particles; h.from 0 to 2 parts of biocide; i.from 20 to 75 parts of water; wherein all the parts are by weight and the sum of the components a. to i . is 100 parts.

No. of Pages : 32 No. of Claims : 26

(12) PATENT APPLICATION PUBLICATION
(19) INDIA
(22) Date of filing of Application :04/11/2013
(21) Application No.9498/DELNP/2013 A
(43) Publication Date : 19/12/2014

(54) Title of the invention : METHOD OF OPERATION OF PROCESS TO PRODUCE SYNGAS FROM CARBONACEOUS MATERIAL

(51) International classification :C10J3/72,C10K1/02,C10J3/84
(31) Priority Document No :61/516704
(32) Priority Date :06/04/2011
(33) Name of priority country :U.S.A.
(86) International Application No :PCT/US2012/032168
Filing Date :04/04/2012
(87) International Publication No :WO 2013/032537
(61) Patent of Addition to Application Number :NA
Filing Date :NA
(62) Divisional to Application Number :NA
Filing Date :NA

(71)**Name of Applicant :**
1)INEOS BIO SA
Address of Applicant :Avenue des Uttins 3 CH 1180 Rolle Switzerland
(72)**Name of Inventor :**
1)KO Ching Whan
2)SLAPE Michael Sean
3)BELL Peter S
4)OCFEMIA Kim

(57) Abstract :
A process is provided for producing syngas that is effective for use in downstream processes. The process for producing syngas includes operating a gasification apparatus in a start up mode until the gasification apparatus and equipment downstream of the gasification apparatus are adequately warmed up to a first target temperature. Upon reaching a first target temperature the process is then operated in a production mode to produce a second syngas with a higher CO/CO2 molar ratio. Operation in a start up mode until reaching a first target temperature provides a process that is effective for reducing fouling in downstream equipment and for providing a second syngas can be more effectively cooled and cleaned.

No. of Pages : 31 No. of Claims : 51

(12) PATENT APPLICATION PUBLICATION
(19) INDIA
(22) Date of filing of Application :04/11/2013
(21) Application No.9499/DELNP/2013 A
(43) Publication Date : 19/12/2014

(54) Title of the invention : SYNGAS COOLER SYSTEM AND METHOD OF OPERATION

(51) International classification :C10J3/72,C01B3/02
(31) Priority Document No :61/516646
(32) Priority Date :06/04/2011
(33) Name of priority country :U.S.A.
(86) International Application No :PCT/US2012/032174
Filing Date :04/04/2012
(87) International Publication No :WO 2012/138762
(61) Patent of Addition to Application Number :NA
Filing Date :NA
(62) Divisional to Application Number :NA
Filing Date :NA

(71)**Name of Applicant :**
1)INEOS BIO SA
Address of Applicant :Avenue des Uttins 3 CH 1180 Rolle Switzerland
(72)**Name of Inventor :**
1)BELL Peter S
2)VANHECKE Nicolas
3)DESCALES Bernard

(57) Abstract :
A process and system for cooling syngas provides effective syngas cooling and results in reduced levels of fouling in syngas cooling equipment. A process for cooling syngas includes blending syngas with cooled recycled syngas in an amount effective for providing a blended syngas with a temperature at an inlet of a syngas cooler of about 600°F to about 1400°F. The blended syngas changes direction of flow at least once prior to the inlet of the syngas cooler.

No. of Pages : 14 No. of Claims : 29

(12) PATENT APPLICATION PUBLICATION
(19) INDIA
(22) Date of filing of Application :21/10/2013
(21) Application No.9054/DELNP/2013 A
(43) Publication Date : 19/12/2014

(54) Title of the invention : COMPOSITIONS AND METHODS FOR THE TREATMENT OF NEUROMYELITIS OPTICA

(51) International classification :A61K39/00,A61P25/00
(31) Priority Document No :61/477955
(32) Priority Date :21/04/2011
(33) Name of priority country :U.S.A.
(86) International Application No :PCT/US2012/034662
Filing Date :23/04/2012
(87) International Publication No :WO 2012/145746
(61) Patent of Addition to Application Number :NA
Filing Date :NA
(62) Divisional to Application Number :NA
Filing Date :NA

(71)**Name of Applicant :**
1)THE REGENTS OF THE UNIVERSITY OF COLORADO A BODY CORPORATE
Address of Applicant :1800 Grant Street 8th Floor Denver CO 80203 U.S.A.
2)THE REGENTS OF THE UNIVERSITY OF CALIFORNIA A CALIFORNIA CORPORATION
(72)**Name of Inventor :**
1)BENNETT Jeffrey L.
2)OWENS Gregory P.
3)VERKMAN Alan S.

(57) Abstract :
The present invention is directed to antibodies binding to aquaporin 4 (AQP4) and methods of using such antibodies to treat neuromyelitis optica (NMO) either as a monotherapy or in combination with standard NMO therapies such as immunosuppressives or plasmaphersis.

No. of Pages : 104 No. of Claims : 46

(12) PATENT APPLICATION PUBLICATION
(19) INDIA
(22) Date of filing of Application :21/10/2013
(21) Application No.9055/DELNP/2013 A
(43) Publication Date : 19/12/2014

(54) Title of the invention : CERAMIC HONEYCOMB FILTER AND METHOD FOR MANUFACTURING SAME

(51) International classification :B01D39/20,B01D46/00,C04B37/00
(31) Priority Document No :2011081374
(32) Priority Date :01/04/2011
(33) Name of priority country :Japan
(86) International Application No :PCT/JP2012/058267
Filing Date :28/03/2012
(87) International Publication No :WO 2012/137655
(61) Patent of Addition to Application Number :NA
Filing Date :NA
(62) Divisional to Application Number :NA
Filing Date :NA

(71)**Name of Applicant :**
1)HITACHI METALS LTD.
Address of Applicant :2 1 Shibaura 1 chome Minato ku Tokyo 1058614 Japan
(72)**Name of Inventor :**
1)OKAZAKI Shunji
2)SOGA Wataru
3)KOMATSU Junji

(57) Abstract :
A ceramic honevcomb filter for removing line particles in exhaust gas, characterized in that: a plurality of ceramic honeycomb structures each having many cells separated b y porous partition walls are connected in an axial direction, with the end faces thereof being joined to each other; at least part of the partition walls of at least one set of adjoining ceramic honeycomb structures are joined to each other in a mutually shifted state; when the opening area of one cell in the cross-section perpendicular to the axial direction of the upstream one of the adjoining ceramic honeycomb structures is expressed as Aoi, and the opening area of the one cell after being reduced as a result of being narrowed by the upstream end face of the partition walls of the downstream ceramic honeycomb structure is expressed as A 02,the average of the opening area ratios A 0 (=Ao2/Aoi) of the respective cells in any contiguous 5 cells — 5 columns (=25 cells) is equal to or less than 0.9; and the roughness (the maximum height is Rz) of each of the partition wall end face and the partition wall surface of the downstream ceramic honeycomb structure is equal to or larger than 1 5µm.

No. of Pages : 67 No. of Claims : 17

(12) PATENT APPLICATION PUBLICATION
(19) INDIA
(22) Date of filing of Application :21/10/2013
(21) Application No.9056/DELNP/2013 A
(43) Publication Date : 19/12/2014

(54) Title of the invention : CONTINUOUS CASTING INSTALLATION WITH AN OSCILLATING DEVICE FOR OSCILLATING A CONTINUOUS CASTING MOULD

(51) International classification :B22D11/053
(31) Priority Document No :11166162.5
(32) Priority Date :16/05/2011
(33) Name of priority country :EPO
(86) International Application No :PCT/EP2012/058662
Filing Date :10/05/2012
(87) International Publication No :WO 2012/156279
(61) Patent of Addition to Application Number :NA
Filing Date :NA
(62) Divisional to Application Number :NA
Filing Date :NA

(71)**Name of Applicant :**
1)SIEMENS VAI METALS TECHNOLOGIES GMBH
Address of Applicant :Turmstrae 44 A 4031 Linz Austria
(72)**Name of Inventor :**
1)POEPPL Johann
2)SHAN Guoxin
3)THOENE Heinrich
4)WIMMER Franz

(57) Abstract :
The invention relates to a continuous casting Installation with a continuous casting mould, a fixed supporting structure for supporting the continuous casting mould, and an oscillating device for oscillating the continuous casting mould in an oscillating direction, having a first pair of Springs (3), consisting of an annular first spring (4) and an annular second spring (5), wherein the first spring (4) and the second spring (5) respectively enclose the continuous casting mould (1) at least partially, and the second spring (5) is at a first distance (6) from the first spring (4) in the oscillating direction (2). The object of the invention is to provide an oscillating device for oscillating a continuous casting mould (1) with which exact guidance of the mould can be obtained along with a compact type of construction and comparatively great oscillating amplitudes. This object is achieved by a device in which the first spring (4) is fastened in a first quadrant (I) on the continuous casting mould (1) and in a third quadrant (III) on the supporting structure (14), while the other quadrants (II, IV) are free, and in which the second spring (5) is fastened in a first quadrant (I) on the supporting structure (14) and in a third quadrant (III) on the continuous casting mould (1), while the other quadrants (II, IV) are free.

No. of Pages : 25 No. of Claims : 12

(12) PATENT APPLICATION PUBLICATION
(19) INDIA
(22) Date of filing of Application :21/10/2013
(21) Application No.9058/DELNP/2013 A
(43) Publication Date : 19/12/2014

(54) Title of the invention : METHOD AND DEVICE FOR CHARGING COAL CONTAINING MATERIAL AND IRON CARRIER MATERIAL

(51) International classification :C21B13/00,C21B13/14,F27D3/08
(31) Priority Document No :A 723/2011
(32) Priority Date :19/05/2011
(33) Name of priority country :Austria
(86) International Application No :PCT/EP2012/058499
Filing Date :09/05/2012
(87) International Publication No :WO 2012/156243
(61) Patent of Addition to Application Number :NA
Filing Date :NA
(62) Divisional to Application Number :NA
Filing Date :NA

(71)**Name of Applicant :**
1)SIEMENS VAI METALS TECHNOLOGIES GMBH
Address of Applicant :Turmstrae 44 A 4031 Linz Austria
(72)**Name of Inventor :**
1)MILLNER Robert
2)AICHINGER Georg
3)BERNER Franz
4)EDER Thomas
5)PLAUL Jan Friedemann
6)REIN Norbert
7)SCHERNEY Andreas
8)WIEDER Kurt
9)WURM Johann

(57) Abstract :
The present invention relates to a method for charging material, comprising coal-containing material in lump form and, preferably hot, iron carrier material, into a melter gasifier of a smelting reduction Installation. This involves bringing together the coal-containing material in lump form and the, preferably hot, iron carrier material before and/or while they enter the melter gasifier. The ratio of the combined amounts of, preferably hot, iron carrier material and coal-containing material in lump form is variable. The method is characterized in that the combined amounts of, preferably hot, iron carrier material and coal-containing material in lump form are distributed over the cross section of the melter gasifier by means of a dynamic distributing device, and the ratio of the combined amounts of, preferably hot, iron carrier material and coal-containing material in lump form is set in dependence on the position of the dynamic distributing device.

No. of Pages : 39 No. of Claims : 19

(12) PATENT APPLICATION PUBLICATION
(19) INDIA
(22) Date of filing of Application :04/11/2013
(21) Application No.9469/DELNP/2013 A
(43) Publication Date : 19/12/2014

(54) Title of the invention : VENTILATION UNIT

(51) International classification :H05K5/06
(31) Priority Document No :2011099880
(32) Priority Date :27/04/2011
(33) Name of priority country :Japan
(86) International Application No :PCT/JP2012/000081
Filing Date :10/01/2012
(87) International Publication No :WO 2012/147241
(61) Patent of Addition to Application Number :NA
Filing Date :NA
(62) Divisional to Application Number :NA
Filing Date :NA

(71)**Name of Applicant :**
1)NITTO DENKO CORPORATION
Address of Applicant :1 2 Shimohozumi 1 chome Ibaraki shi Osaka 5678680 Japan
(72)**Name of Inventor :**
1)UEMURA Kou
2)YANO Youzou
3)DAIMON Atsushi

(57) Abstract :
A ventilation unit (1) is equipped with: a ventilation member (2) that is attached to an aperture (11) of a chassis (10) and includes a waterproof ventilation film (4) for covering the aperture (11); a sealing member (6) that seals the gap between the chassis (10) and the ventilation member (2); and a washer (7) that is pressed against the chassis (10) at the perimeter of the sealing member (6) by the ventilation member (2). The washer (7) covers the gap formed between the chassis (10) and the peripheral part of the ventilation member (2) outside of the sealing member (6) when the ventilation member (2) is attached to the aperture (11) of the chassis (10).

No. of Pages : 18 No. of Claims : 4

(12) PATENT APPLICATION PUBLICATION
(19) INDIA
(22) Date of filing of Application :05/11/2013
(21) Application No.9520/DELNP/2013 A
(43) Publication Date : 19/12/2014

(54) Title of the invention : CARBODIIMIDES FROM TRISUBSTITUTED AROMATIC ISOCYANATES A METHOD FOR PRODUCING SAME AND THE USE OF SAME

(51) International classification :C08G18/02,C07C267/00,C08K5/29
(31) Priority Document No :11164899.4
(32) Priority Date :05/05/2011
(33) Name of priority country :EPO
(86) International Application No :PCT/EP2012/057708
Filing Date :27/04/2012
(87) International Publication No :WO 2012/150181
(61) Patent of Addition to Application Number :NA
Filing Date :NA
(62) Divisional to Application Number :NA
Filing Date :NA

(71)**Name of Applicant :**
1)RHEIN CHEMIE RHEINAU GMBH
Address of Applicant :D¼sseldorfer Strasse 23 27 68219 Mannheim Germany
(72)**Name of Inventor :**
1)LAUFER Wilhelm
2)BECHEM Benjamin
3)ECKERT Armin

(57) Abstract :
The invention relates to novel carbodiimides, to a method for producing same, and to the use of same as stabilizers, - crosslinking agents, and/or compatibilizers in thermoplasts, ester-based polyols for polyurethane applications, in rigid foam, in ® flexible foam, or in CASE applications (coatings, adhesives, sealants, and elastomers) for example.

No. of Pages : 11 No. of Claims : 11

(12) PATENT APPLICATION PUBLICATION
(19) INDIA
(22) Date of filing of Application :05/11/2013
(21) Application No.9521/DELNP/2013 A
(43) Publication Date : 19/12/2014

(54) Title of the invention : EXPANDABLE DEVICES COATED WITH A PACLITAXEL COMPOSITION

(51) International classification :A61L31/14,A61L31/16,A61L29/08
(31) Priority Document No :13/115378
(32) Priority Date :25/05/2011
(33) Name of priority country :U.S.A.
(86) International Application No :PCT/US2012/037784
Filing Date :14/05/2012
(87) International Publication No :WO 2012/162010
(61) Patent of Addition to Application Number :NA
Filing Date :NA
(62) Divisional to Application Number :NA
Filing Date :NA

(71)**Name of Applicant :**
1)CORDIS CORPORATION
Address of Applicant :430 Route 22 Bridgewater NJ 8807 U.S.A.
(72)**Name of Inventor :**
1)ZHAO Jonathon Z.

(57) Abstract :
Medical devices may be utilized for local and regional therapeutic agent delivery. These therapeutic agents or compounds may reduce a biological organism s reaction to the introduction of the medical device to the organism. In addition these therapeutic drugs agents and/or compounds may be utilized to promote healing including the prevention of thrombosis. The drugs agents and/or compounds may also be utilized to treat specific disorders including restenosis vulnerable plaque and atherosclerosis in type 2 diabetic patients.

No. of Pages : 88 No. of Claims : 10

(12) PATENT APPLICATION PUBLICATION
(19) INDIA
(22) Date of filing of Application :05/11/2013
(21) Application No.9522/DELNP/2013 A
(43) Publication Date : 19/12/2014

(54) Title of the invention : EXPANDABLE DEVICES COATED WITH A RAPAMYCIN COMPOSITION

(51) International classification :A61L29/08,A61L29/14,A61L29/16
(31) Priority Document No :13/115345
(32) Priority Date :25/05/2011
(33) Name of priority country :U.S.A.
(86) International Application No :PCT/US2012/037780
Filing Date :14/05/2012
(87) International Publication No :WO 2012/162007
(61) Patent of Addition to Application Number :NA
Filing Date :NA
(62) Divisional to Application Number :NA
Filing Date :NA

(71)**Name of Applicant :**
1)CORDIS CORPORATION
Address of Applicant :430 Route 22 Bridgewater NJ 08807 U.S.A.
(72)**Name of Inventor :**
1)DADINO Ronald C.
2)ZHAO Jonathon Z.

(57) Abstract :
Medical devices may be utilized for local and regional therapeutic agent delivery. These therapeutic agents or compounds may reduce a biological organism s reaction to the introduction of the medical device to the organism. In addition these therapeutic drugs agents and/or compounds may be utilized to promote healing including the prevention of thrombosis. The drugs agents and/or compounds may also be utilized to treat specific disorders including restenosis vulnerable plaque and atherosclerosis in type 2 diabetic patients.

No. of Pages : 94 No. of Claims : 10

(12) PATENT APPLICATION PUBLICATION
(19) INDIA
(22) Date of filing of Application :05/11/2013
(21) Application No.9523/DELNP/2013 A
(43) Publication Date : 19/12/2014

(54) Title of the invention : ADJUSTABLE AIMING ASSEMBLY

(51) International classification :A61B17/17
(31) Priority Document No :61/489930
(32) Priority Date :25/05/2011
(33) Name of priority country :U.S.A.
(86) International Application No :PCT/US2012/039571
Filing Date :25/05/2012
(87) International Publication No :WO 2012/162607
(61) Patent of Addition to Application Number :NA
Filing Date :NA
(62) Divisional to Application Number :NA
Filing Date :NA

(71)**Name of Applicant :**
1)SYNTHES GMBH
Address of Applicant :Eimattstrasse 3 CH 4436 Oberdorf Switzerland
(72)**Name of Inventor :**
1)OVERES Tom
2)WALTER Bruno

(57) Abstract :
Provided are distal aiming assemblies useful in aiming fixation members for insertion into an intramedullary device such as a nail. The assemblies include a spring (104) that flexibly connects an elongate arm (106) to a base (100). The spring enables deflection of the elongate arm to compensate for curvature of the intramedullary device when inserted into a bone in turn enabling the user to accurately install fixation members into the intramedullary device through the deflected elongate arm.

No. of Pages : 33 No. of Claims : 20

(12) PATENT APPLICATION PUBLICATION
(19) INDIA
(22) Date of filing of Application :05/11/2013
(21) Application No.9524/DELNP/2013 A
(43) Publication Date : 19/12/2014

(54) Title of the invention : FUEL DISPENSER INPUT DEVICE TAMPER DETECTION ARRANGEMENT

(51) International classification :G08B29/08
(31) Priority Document No :13/105557
(32) Priority Date :11/05/2011
(33) Name of priority country :U.S.A.
(86) International Application No :PCT/US2012/037283
Filing Date :10/05/2012
(87) International Publication No :WO 2012/154937
(61) Patent of Addition to Application Number :NA
Filing Date :NA
(62) Divisional to Application Number :NA
Filing Date :NA

(71)**Name of Applicant :**
1)GILBARCO INC.
Address of Applicant :7300 West Friendly Avenue Greensboro North Carolina 27420 U.S.A.
2)GILBARCO S.R.L.
(72)**Name of Inventor :**
1)CARAPELLI Giovanni
2)ROBERTSON Philip A.
3)TOSI Alberto

(57) Abstract :
A system for detecting unauthorized removal or tampering. The system comprises a printed circuit board having tamper response electronics and a flexible circuit assembly defining a connector portion a switch portion and a cable extending between the connector portion and the switch portion. The flexible circuit assembly is coupled with the printed circuit board at the connector portion. The flexible circuit assembly comprises a plurality of layers each comprising a flexible dielectric substrate and a switch disposed in the switch portion. The switch is in electrical communication with the tamper response electronics of the printed circuit board via a conductive path. The flexible circuit assembly also comprises a tamper responsive conductor circuit enclosing the conductive path. The tamper responsive conductor circuit is in electrical communication with the tamper response electronics of the printed circuit board.

No. of Pages : 52 No. of Claims : 47

(12) PATENT APPLICATION PUBLICATION
(19) INDIA
(22) Date of filing of Application :30/10/2013
(21) Application No.9368/DELNP/2013 A
(43) Publication Date : 19/12/2014

(54) Title of the invention : BATTERY CAN FOR STORAGE BATTERY

(51) International classification :H01M2/12,C22C38/00,C22C38/14
(31) Priority Document No :2011104422
(32) Priority Date :09/05/2011
(33) Name of priority country :Japan
(86) International Application No :PCT/JP2012/061545
Filing Date :01/05/2012
(87) International Publication No :WO 2012/153675
(61) Patent of Addition to Application Number :NA
Filing Date :NA
(62) Divisional to Application Number :NA
Filing Date :NA

(71)**Name of Applicant :**
1)NIPPON STEEL & SUMITOMO METAL CORPORATION
Address of Applicant :6 1 Marunouchi 2 chome Chiyoda ku Tokyo 1008071 Japan
(72)**Name of Inventor :**
1)YAMADA Teruaki
2)MIYOSHI Kohji

(57) Abstract :
Disclosed is a battery can for a storage battery, provided with a safety valve having a first and a second score groove portion is provided to inner and outer surface of can bottom, can body, or can lid. The first and the second score groove portion face each other, and have a first and a second score groove bottom portion, which have a radius of curvature R, respectively. The R is more than 0.20 mm and less than 1.20 mm, and a distance between the bottom portions is 0.045 to 0.150 mm. The portion, which has the safety valve, is constituted by a plated steel sheet having a steel sheet portion of C content is less than 0.040 mass %, S content is less than 0.020 mass %, and tensile strength TS is less than 400 MPa, and a plate layer formed on a surface of the steel sheet portion.

No. of Pages : 62 No. of Claims : 12

(12) PATENT APPLICATION PUBLICATION
(19) INDIA
(22) Date of filing of Application :30/10/2013
(21) Application No.9369/DELNP/2013 A
(43) Publication Date : 19/12/2014

(54) Title of the invention : FLUID INTAKE MEASURING SYSTEM FOR INFANTS

(51) International classification :G01G19/52,G01G19/44,G01G23/365
(31) Priority Document No :2011901780
(32) Priority Date :11/05/2011
(33) Name of priority country :Australia
(86) International Application No :PCT/AU2012/000461
Filing Date :01/05/2012
(87) International Publication No :WO 2012/151611
(61) Patent of Addition to Application Number :NA
Filing Date :NA
(62) Divisional to Application Number :NA
Filing Date :NA

(71)**Name of Applicant :**
1)SARGOOD Annie Elizabeth
Address of Applicant :34 Rooding Street Brighton Victoria 3186 Australia
2)COOKE Randall Laurence
(72)**Name of Inventor :**
1)SARGOOD Annie Elizabeth
2)COOKE Randall Laurence

(57) Abstract :
A fluid intake measuring system for an infant comprises a change mat containing or carrying a weighing pad responsive to the weight of an infant placed on the change mat and a display responsive to the weighing pad to indicate weight gain or fluid volume intake of an infant placed on the mat prior to and following feeding. In an embodiment the system is integrated into a carrying bag. The mat when folded into a storage condition lies against an outer side of the bag and in its unfolded operative state extends outwardly from a lower part of the side of the bag.

No. of Pages : 13 No. of Claims : 7

(12) PATENT APPLICATION PUBLICATION
(19) INDIA
(22) Date of filing of Application :30/10/2013
(21) Application No.9371/DELNP/2013 A
(43) Publication Date : 19/12/2014

(54) Title of the invention : SECURITY DEVICE

(51) International classification :B42D15/00,B42D15/10,G02B3/06
(31) Priority Document No :1107657.7
(32) Priority Date :09/05/2011
(33) Name of priority country :U.K.
(86) International Application No :PCT/GB2012/050963
Filing Date :03/05/2012
(87) International Publication No :WO 2012/153106
(61) Patent of Addition to Application Number :NA
Filing Date :NA
(62) Divisional to Application Number :NA
Filing Date :NA

(71)**Name of Applicant :**
1)DE LA RUE INTERNATIONAL LIMITED
Address of Applicant :De La Rue House Jays Close Viables Basingstoke Hampshire RG22 4BS U.K.
(72)**Name of Inventor :**
1)HOLMES Brian William

(57) Abstract :
A security device has a lenticular device comprising an array of lenticular focusing elements (2); a corresponding array of sets of image strips (1-4), the sets of image strips having substantially the same periodicity as, or an integral multiple of the periodicity of, the array of lenticular focusing elements. The image strips (1-4) are formed and the focusing elements (2) located relative to the image strips such that at each of a plurality of viewing angles (A-D), a respective one image strip from each set is viewed in response to incident light falling on a respective lenticular focusing element. The image strips (1-4) are constructed such that the device presents a cyclically repeating sequence of images as the device is viewed at successive viewing angles, the image sequence comprising a change in form of an image between a first form and a second form and then a reversal of the sequence back to the first form, the combined image sequences presenting a contiguous variation in the image form.

No. of Pages : 56 No. of Claims : 29

(12) PATENT APPLICATION PUBLICATION
(19) INDIA
(22) Date of filing of Application :30/10/2013
(21) Application No.9372/DELNP/2013 A
(43) Publication Date : 19/12/2014

(54) Title of the invention : METHOD FOR INJECTION MOLDING AT LOW SUBSTANTIALLY CONSTANT PRESSURE

(51) International classification :B29C45/77,B29C45/78
(31) Priority Document No :61/488559
(32) Priority Date :20/05/2011
(33) Name of priority country :U.S.A.
(86) International Application No :PCT/US2012/038819
Filing Date :21/05/2012
(87) International Publication No :WO 2012/162231
(61) Patent of Addition to Application Number :NA
Filing Date :NA
(62) Divisional to Application Number :NA
Filing Date :NA

(71)**Name of Applicant :**
1)THE PROCTER & GAMBLE COMPANY
Address of Applicant :One Procter & Gamble Plaza Cincinnati Ohio 45202 U.S.A.
(72)**Name of Inventor :**
1)ALTONEN Gene Michael
2)BERG Charles John Jr.
3)NEUFARTH Ralph Edward
4)SCHILLER Gary Francis
5)LAYMAN John Moncrief
6)SCHARRENBERG Rainer

(57) Abstract :
Injection molding methods at low, substantially constant melt pressures in particular a method comprising: (a) filling with a shot comprising a molten thermoplastic material an unpressurized mold cavity of a molding apparatus, the shot comprising the molten material having a melt pressure that, upon injection into the mold cavity, exceeds a pre-injection pressure of the shot comprising the molten material; and, (b) while filling substantially the entire mold cavity with the shot comprising the molten material, maintaining the melt pressure substantially constant at less than 6000 psi, wherein: an internal portion of the mold cavity spaced at least 2 mm from a most immediate surface of the mold cavity contacting the shot comprising the molten material is maintained at a temperature of less than about 100[deg.]C, and the thermoplastic material has a melt flow index of 0.1 g/10 min to about 500 g/10 min.

No. of Pages : 33 No. of Claims : 15

(12) PATENT APPLICATION PUBLICATION
(19) INDIA
(22) Date of filing of Application :04/11/2013
(21) Application No.9504/DELNP/2013 A
(43) Publication Date : 19/12/2014

(54) Title of the invention : TERRAIN SURVEILLANCE SYSTEM

(51) International classification :G08B13/189
(31) Priority Document No :61/481775
(32) Priority Date :03/05/2011
(33) Name of priority country :U.S.A.
(86) International Application No :PCT/IL2012/000181
Filing Date :03/05/2012
(87) International Publication No :WO 2012/150590
(61) Patent of Addition to Application Number :NA
Filing Date :NA
(62) Divisional to Application Number :NA
Filing Date :NA

(71)**Name of Applicant :**
1)SHILAT OPTRONICS LTD
Address of Applicant :1 Hamada Street 76703 Rehovot Israel
(72)**Name of Inventor :**
1)GUETTA Avishay
2)YAGUDAEV Michael
3)KORNGUT Doron

(57) Abstract :
A system for the surveillance of terrain and the detection of intrusions over a plane extending into that terrain. A curtain array of light beams is projected along the plane and reflections from the terrain are detected by a sensor array essentially spatially coincident with the array of light sources. The times of flight of the beams are determined and these characterize the form of the terrain being surveilled. The initial background reflection pattern is acquired and stored by the system. A sudden change in this detected background pattern can be defined as arising from an unexpected reflection indicative of an intrusion. Signal processing systems are described utilizing modulated laser beams and detection at a frequency at least twice that of the modulation such that reflected signals arising from the ON and the OFF periods of the laser modulation can be subtracted to eliminate the background signals.

No. of Pages : 34 No. of Claims : 32

(12) PATENT APPLICATION PUBLICATION
(19) INDIA
(22) Date of filing of Application :04/11/2013
(21) Application No.9506/DELNP/2013 A
(43) Publication Date : 19/12/2014

(54) Title of the invention : PROCESS DEVICE WITH LIGHT CHANGE TRIGGERED DISPLAY

(51) International classification :G06F1/00,G06F1/28,G09G5/00
(31) Priority Document No :13/068611
(32) Priority Date :16/05/2011
(33) Name of priority country :U.S.A.
(86) International Application No :PCT/US2012/037739
Filing Date :14/05/2012
(87) International Publication No :WO 2012/158599
(61) Patent of Addition to Application Number :NA
Filing Date :NA
(62) Divisional to Application Number :NA
Filing Date :NA

(71)**Name of Applicant :**
1)ROSEMOUNT INC.
Address of Applicant :12001 Technology Drive Eden Prairie Minnesota 55344 U.S.A.
(72)**Name of Inventor :**
1)JOHNSON James
2)NELSON Richard

(57) Abstract :
A field device comprises a transducer a photodetector a display and a display controller. The transducer controls or monitors process variable and the display shows information relating to the process variable. The photodetector detects a light level. The display controller is capable of switching the display on and off in response to changes in the light level detected by the photodetector.

No. of Pages : 15 No. of Claims : 22

(12) PATENT APPLICATION PUBLICATION
(19) INDIA
(22) Date of filing of Application :05/11/2013
(21) Application No.9535/DELNP/2013 A
(43) Publication Date : 19/12/2014

(54) Title of the invention : STERILIZED POLYETHERIMIDE /POLYPHENYLENE ETHER SULFONE ARTICLES

(51) International classification :C08L81/06,C08L79/08,A61L2/20
(31) Priority Document No :61/493140
(32) Priority Date :03/06/2011
(33) Name of priority country :U.S.A.
(86) International Application No :PCT/US2012/040467
Filing Date :01/06/2012
(87) International Publication No :WO 2012/167084
(61) Patent of Addition to Application Number :NA
Filing Date :NA
(62) Divisional to Application Number :NA
Filing Date :NA

(71)**Name of Applicant :**
1)SABIC INNOVATIVE PLASTICS IP B.V.
Address of Applicant :Plasticslaan 1 NL 4612PX Bergen op Zoom Netherlands
(72)**Name of Inventor :**
1)DAVIS Michael Scott
2)GALLUCCI Robert Russell
3)LEE Shawn
4)SANNER Mark A.

(57) Abstract :
A sterilized article comprising a hydrogen peroxide plasma or hydrogen peroxide vapor sterilized polymer composition the polymer composition comprising from 20 to 80 weight % of a polyphenylene ether sulfone; and from 20 to 80 weight % of a polyetherimide. When sterilized with a hydrogen peroxide plasma or hydrogen peroxide vapor the articles have surprisingly improved resistance to changes in color and clarity as well as resistance to loss of mechanical properties.

No. of Pages : 43 No. of Claims : 32

(12) PATENT APPLICATION PUBLICATION
(19) INDIA
(22) Date of filing of Application :05/11/2013
(21) Application No.9536/DELNP/2013 A
(43) Publication Date : 19/12/2014

(54) Title of the invention : AMORPHOUS POLYETHERIMIDE FILMS FOR CAPACITORS METHODS OF MANUFACTURE AND ARTICLES MANUFACTURED THEREFROM

(51) International classification :C08J5/18
(31) Priority Document No :61/485285
(32) Priority Date :12/05/2011
(33) Name of priority country :U.S.A.
(86) International Application No :PCT/US2012/037603
Filing Date :11/05/2012
(87) International Publication No :WO 2012/155083
(61) Patent of Addition to Application Number :NA
Filing Date :NA
(62) Divisional to Application Number :NA
Filing Date :NA

(71)**Name of Applicant :**
1)SABIC INNOVATIVE PLASTICS IP B.V.
Address of Applicant :Plasticslaan 1 NL 4612 PX Bergen op Zoom Netherlands
(72)**Name of Inventor :**
1)SILVI Norberto
2)CHEN Qin
3)MC TIGUE Robert Colin
4)CHOATE Kim R.

(57) Abstract :
A uniaxially stretched extruded film comprising a polyetherimide and less than 5 weight percent of fluorine wherein the extruded film has at least one wrinkle free region having a first surface and a second surface the at least one extruded wrinkle free region comprising: an extruded thickness of more than 0 and less than 13 micrometers and a variation of the thickness of the film of +/ 10% of the thickness of the film and a surface roughness average that is less than +/ 3% of the average thickness of the film as measured by optional profilometery; and further wherein the film has a dielectric constant at 1 kHz and room temperature of at least 2.7; a dissipation factor at 1 kHz and room temperature of 1% or less; and a breakdown strength of at least 300 Volts/micrometer.

No. of Pages : 42 No. of Claims : 25

(12) PATENT APPLICATION PUBLICATION
(19) INDIA
(22) Date of filing of Application :06/11/2013
(21) Application No.9542/DELNP/2013 A
(43) Publication Date : 19/12/2014

(54) Title of the invention : LIGHT EXTRACTION TRANSPARENT SUBSTRATE FOR ORGANIC ELECTROLUMINESCENT ELEMENT AND ORGANIC ELECTROLUMINESCENT ELEMENT USING SAME

(51) International classification :H05B33/02,H01L51/50
(31) Priority Document No :2011099542
(32) Priority Date :27/04/2011
(33) Name of priority country :Japan
(86) International Application No :PCT/JP2012/061022
Filing Date :25/04/2012
(87) International Publication No :WO 2012/147759
(61) Patent of Addition to Application Number :NA
Filing Date :NA
(62) Divisional to Application Number :NA
Filing Date :NA

(71)**Name of Applicant :**
1)JX Nippon Oil & Energy Corporation
Address of Applicant :6 3 Otemachi 2 chome Chiyoda ku Tokyo 1008162 Japan
(72)**Name of Inventor :**
1)NISHIMURA Suzushi
2)JEONG Soon Moon
3)FUKUDA Maki
4)SHIBANUMA Toshihiko

(57) Abstract :
A light extraction transparent substrate for an organic EL element, which is used by being disposed on an emitting surf ace side of light (L) in the organic EL element, 5 the light extraction transparent substrate comprising: a transparent supporting substrate (10); a diffraction grating (11) which comprises a first concavity and convexity layer having first concavities and convexities formed on a surface thereof and which is located 10 on a surface of the transparent supporting substrate (10) , the surface serving as an incident surface (10A) of the light (L) of the organic EL element when the transparent supporting substrate (10) is used in the organic EL element ; and 15 a microlens (12) which comprises a second concavity and convexity layer having second concavities and convexities formed on a surface thereof and which is located on a surface of the transparent supporting substrate (10) , the surface serving as an emitting surface (10B) of the 20 light (L) of the organic EL element when the transparent supporting substrate (10) is used in the organic EL element, wherein a shape of the first concavities and convexities and a shape of the second concavities and convexities are each 25 such that when a Fourier-transformed image is obtained by performing two-dimensional fast Fourier transform 173 NOPF12-509 ORIGINAL : 95 421131 processing on a concavity and convexity analysis image obtained by analyzing the shape of the concavities and convexities by use of an atomic force microscope, tQeg NOV 2013 Fourier-transformed image shows a circular or annular pattern substantially centered at an origin at which an absolute value of wavenumber is 0 urn-1.

No. of Pages : 183 No. of Claims : 10

(12) PATENT APPLICATION PUBLICATION
(19) INDIA
(22) Date of filing of Application :04/11/2013
(21) Application No.9507/DELNP/2013 A
(43) Publication Date : 19/12/2014

(54) Title of the invention : GAS TURBINE ARRANGEMENT FOR A LOCOMOTIVE

(51) International classification :F02C7/36,B60L11/02
(31) Priority Document No :2011127665
(32) Priority Date :07/07/2011
(33) Name of priority country :Russia
(86) International Application No :PCT/RU2012/000050
Filing Date :01/02/2012
(87) International Publication No :WO 2013/006083
(61) Patent of Addition to Application Number :NA
Filing Date :NA
(62) Divisional to Application Number :NA
Filing Date :NA

(71)**Name of Applicant :**
1)OPEN JOINT STOCK COMPANY «RUSSIAN RAILWAYS»
Address of Applicant :Novaya Basmannaya str. 2 Moscow 107174 Russia
(72)**Name of Inventor :**
1)NESTEROV Eduard Ivanovich
2)KOSSOV Valeriy Semyenovich
3)RUDENKO Vladimir Fedorovich
4)SAZONOV Igor Valentinovich

(57) Abstract :
The invention relates to locomotive gas turbine engines which run on liquefied natural gas. The gas turbine arrangement comprises three pressure shafts. A high-pressure shaft is disposed above a low- 5 pressure shaft and a medium-pressure shaft. A low pressure compressor with an inlet duct is mounted on the low-pressure shaft and is connected by a shaft to a low-pressure turbine and by a gas connection via a channel to a medium-pressure turbine; the medium-pressure turbine is mounted on the medium pressure shaft and is connected by a shaft to a first synchronous traction generator and by a channel to an intermediate combustion chamber; a high-pressure compressor is mounted on the high-pressure 10 shaft and is connected by a shaft to a high-pressure turbine and by a channel to a main combustion chamber. The low-pressure compressor is equipped with a rotating guide vane driven by the unit, a bypass valve is mounted on an intercooler, the main combustion chambers, connected by a channel to the high-pressure turbine, are situated in a regenerative heat exchanger, the high-pressure compressor is connected via a shaft and a reduction gear to a starter, and the high-pressure turbine is connected by a 15 shaft to a second synchronous traction generator in order to make it possible for the gas turbine arrangement to run at no load and at light loads from the high-pressure valve only. The technical result of the invention is a significant reduction in the fuel consumption of the gas turbine arrangement at no load and at light loads, and the elimination of the need for an auxiliary diesel generator on the locomotive.

No. of Pages : 13 No. of Claims : 2

(12) PATENT APPLICATION PUBLICATION
(19) INDIA
(22) Date of filing of Application :04/11/2013
(21) Application No.9508/DELNP/2013 A
(43) Publication Date : 19/12/2014

(54) Title of the invention : REDOX FLOW BATTERY

(51) International classification :H01M8/04,H01M8/18
(31) Priority Document No :2011142219
(32) Priority Date :27/06/2011
(33) Name of priority country :Japan
(86) International Application No :PCT/JP2012/065980
Filing Date :22/06/2012
(87) International Publication No :WO 2013/002137
(61) Patent of Addition to Application Number :NA
Filing Date :NA
(62) Divisional to Application Number :NA
Filing Date :NA

(71)**Name of Applicant :**
1)SUMITOMO ELECTRIC INDUSTRIES LTD.
Address of Applicant :5 33 Kitahama 4 chome Chuo ku Osaka shi Osaka 5410041 Japan
(72)**Name of Inventor :**
1)KUMAMOTO Takahiro
2)DONG Yongrong
3)SHIGEMATSU Toshio

(57) Abstract :
A redox flow battery wherein charging and discharging are performed b y supplying a positive electrode electrolyte solution that i s retained in a posit ive electrode tank and a negative electrode electrolyte solution that i s retained in a negative electrode tank t o a battery element. The positive electrode electrolyte solution contains M n ions as a positive electrode active material. The positive electrode tank i s provided with: a pipe for positive electrode charging, said pipe having an opening near the liquid level o f the positive elec trode electrolyte solution in the positive electrode tank; and a pipe for positive electrode discharging, said pipe having an opening near the bottom o f the positive elec trode tank. This redox flow battery may comprise a stirring mechanism that stirs the electrolyte solution within the tank, and may also comprise a communica tion pipe that connects the positive electrode tank and the negative electrode tank with each other.

No. of Pages : 83 No. of Claims : 22

(12) PATENT APPLICATION PUBLICATION
(19) INDIA
(22) Date of filing of Application :04/11/2013
(21) Application No.9509/DELNP/2013 A
(43) Publication Date : 19/12/2014

(54) Title of the invention : SYSTEM AND METHOD FOR MANUFACTURING USING A VIRTUAL FRAME OF REFERENCE

(51) International classification :G05B19/418,A61F13/15
(31) Priority Document No :NA
(32) Priority Date :NA
(33) Name of priority country :NA
(86) International Application No :PCT/US2011/037938
Filing Date :25/05/2011
(87) International Publication No :WO 2012/161709
(61) Patent of Addition to Application Number :NA
Filing Date :NA
(62) Divisional to Application Number :NA
Filing Date :NA

(71)**Name of Applicant :**
1)THE PROCTER & GAMBLE COMPANY
Address of Applicant :One Procter & Gamble Plaza Cincinnati Ohio 45202 U.S.A.
(72)**Name of Inventor :**
1)SINGH Rajesh Kumar
2)BERTIN Jeremy Georgies
3)OLSCHNER Thomas Keith
4)ROSSITER Jon Richard
5)MARSHALL Steven Arthru

(57) Abstract :
System and method to use a virtual frame of reference to evaluate and control a manufacturing system. Electronic images from a vision system may be analyzed using the virtual frame of reference to control the phasing of devices in the manufacturing system and to generate alerts.

No. of Pages : 33 No. of Claims : 15

(12) PATENT APPLICATION PUBLICATION
(19) INDIA
(22) Date of filing of Application :04/11/2013
(21) Application No.9510/DELNP/2013 A
(43) Publication Date : 19/12/2014

(54) Title of the invention : AN IMPROVED AIRLAID SHEET MATERIAL

(51) International classification :A61F13/15,D04H1/645
(31) Priority Document No :11166291.2
(32) Priority Date :16/05/2011
(33) Name of priority country :EPO
(86) International Application No :PCT/US2012/037941
Filing Date :15/05/2012
(87) International Publication No :WO 2012/158692
(61) Patent of Addition to Application Number :NA
Filing Date :NA
(62) Divisional to Application Number :NA
Filing Date :NA

(71)**Name of Applicant :**
1)THE PROCTER & GAMBLE COMPANY
Address of Applicant :One Procter & Gamble Plaza Cincinnati Ohio 45202 U.S.A.
(72)**Name of Inventor :**
1)TAMBURRO Maurizio
2)CARLUCCI Giovanni

(57) Abstract :
The present invention relates to an airlaid sheet material comprising a dry laid fibrous web and a latex coating on both surfaces thereof in selected amounts. The airlaid sheet material can be an absorbent structure for absorption of fluids.

No. of Pages : 17 No. of Claims : 9

(12) PATENT APPLICATION PUBLICATION
(19) INDIA
(22) Date of filing of Application :04/11/2013
(21) Application No.9491/DELNP/2013 A
(43) Publication Date : 19/12/2014

(54) Title of the invention : BIPHENYL DERIVATIVES USEFUL AS GLUCAGON RECEPTOR ANTAGONISTS

(51) International classification	:C07C231/12,C07C233/83,A61P3/08
(31) Priority Document No	:61/488848
(32) Priority Date	:23/05/2011
(33) Name of priority country	:U.S.A.
(86) International Application No	:PCT/US2012/039173
Filing Date	:23/05/2012
(87) International Publication No	:WO 2012/162409
(61) Patent of Addition to Application Number	:NA
Filing Date	:NA
(62) Divisional to Application Number	:NA
Filing Date	:NA

(71)**Name of Applicant :**
1)JANSSEN PHARMACEUTICA NV
Address of Applicant :Turnhoutseweg 30 B 2340 Beerse Belgium
(72)**Name of Inventor :**
1)CHAKRAVARTY Devraj
2)GRECO Michael N.
3)SHOOK Brian
4)XU Guozhang
5)ZHANG Rui

(57) Abstract :
Abstract: The present invention is directed to biphenyl derivatives of Formula (I), pharmaceutical com positions containing them and their use in the treatment and / or prevention of disorders and conditions amelior ated by antagonizing one or more glucagon receptors, including for example metabolic diseases such as Type II diabetes mellitus and obesity. (I)

No. of Pages : 86 No. of Claims : 21

(12) PATENT APPLICATION PUBLICATION
(19) INDIA
(22) Date of filing of Application :06/11/2013
(21) Application No.9560/DELNP/2013 A
(43) Publication Date : 19/12/2014

(54) Title of the invention : CONFIGURABLE INPUT/OUTPUT PROCESSOR

(51) International classification :G06F9/44,G06F9/54
(31) Priority Document No :NA
(32) Priority Date :NA
(33) Name of priority country :NA
(86) International Application No :PCT/SE2011/050574
Filing Date :06/05/2011
(87) International Publication No :WO 2012/154092
(61) Patent of Addition to Application Number :NA
Filing Date :NA
(62) Divisional to Application Number :NA
Filing Date :NA

(71)**Name of Applicant :**
1)SAAB AB
Address of Applicant :S 581 88 Linkping Sweden
(72)**Name of Inventor :**
1)H…KEG…RD Jan
2)DANIELSSON Torkel
3)GRIPSBORN Anders

(57) Abstract :
The invention pertains to a configurable input/output processing device a method for configuring the configurable input/output processing device and a computer program product for performing the steps of the method. The configurable input/output processing device (6) is arranged to control data traffic associated to a distributed avionics control system comprising a plurality of processing nodes interconnected in a network (2) wherein each of the plurality of processing nodes is connected to the network via at least one of said configurable input/output processing device. The configurable input/output processor comprise first instructions (CCR) said first instructions comprising processing information for the at least one input/output processing device and being independent of a current configuration of the distributed avionics control system and second instructions (SCT) said second instructions being dependent on the current configuration of the distributed avionics control system.

No. of Pages : 41 No. of Claims : 14

(12) PATENT APPLICATION PUBLICATION
(19) INDIA
(22) Date of filing of Application :06/11/2013
(21) Application No.9562/DELNP/2013 A
(43) Publication Date : 19/12/2014

(54) Title of the invention : VENTILATION UNIT

(51) International classification :H05K5/06,B60R16/02
(31) Priority Document No :2011099879
(32) Priority Date :27/04/2011
(33) Name of priority country :Japan
(86) International Application No :PCT/JP2012/000080
Filing Date :10/01/2012
(87) International Publication No :WO 2012/147240
(61) Patent of Addition to Application Number :NA
Filing Date :NA
(62) Divisional to Application Number :NA
Filing Date :NA

(71)**Name of Applicant :**
1)NITTO DENKO CORPORATION
Address of Applicant :1 2 Shimohozumi 1 chome Ibaraki shi Osaka 5678680 Japan
(72)**Name of Inventor :**
1)DAIMON Atsushi
2)UEMURA Kou
3)YANO Youzou

(57) Abstract :
A ventilation unit (1A) is equipped with: a ventilation member (2) that is attached to an aperture (11) of a chassis (10) and includes a waterproof ventilation film (4) for covering the aperture (11); a sealing member (6) that seals the gap between the chassis (10) and the ventilation member (2); and a ring shaped partition wall member (7A) in the interior of which the ventilation member (2) is inserted. The partition wall member (7A) is formed so as to be capable of being held while in contact with the chassis (10) and covers the gap formed between the chassis (10) and the peripheral part of the ventilation member (2) outside of the sealing member (6) when the ventilation member (2) is attached to the aperture (11) of the chassis (10).

No. of Pages : 25 No. of Claims : 10

(12) PATENT APPLICATION PUBLICATION
(19) INDIA
(22) Date of filing of Application :06/11/2013
(21) Application No.9563/DELNP/2013 A
(43) Publication Date : 19/12/2014

(54) Title of the invention : MODIFIED NANOPARTICLES THEIR PREPARATION AND USE TO IMPROVE CATIONIC DYEABILITY OF FIBROUS SUBSTRATE

(51) International classification :C09C1/30,C09C1/36,C09C3/12
(31) Priority Document No :201110175679.4
(32) Priority Date :23/06/2011
(33) Name of priority country :China
(86) International Application No :PCT/US2012/043860
Filing Date :22/06/2012
(87) International Publication No :WO 2012/178094
(61) Patent of Addition to Application Number :NA
Filing Date :NA
(62) Divisional to Application Number :NA
Filing Date :NA

(71)**Name of Applicant :**
1)E. I. du Pont de Nemours and Company
Address of Applicant :1007 Market Street Wilmington Delaware 19899 U.S.A.
(72)**Name of Inventor :**
1)MENG Fanliang
2)SHAO Xiaocong

(57) Abstract :
This invention relates to certain modified nanoparticles grafted with polymers comprise sulfonated benzene groups and preparation thereof. This invention also relates to certain polyester compositions comprising the modified nanoparticles and their use to improve cationic dyeability of said polyester compositions.

No. of Pages : 34 No. of Claims : 16

(12) PATENT APPLICATION PUBLICATION
(19) INDIA
(22) Date of filing of Application :06/11/2013
(21) Application No.9564/DELNP/2013 A
(43) Publication Date : 19/12/2014

(54) Title of the invention : PLASMA GENERATING METHOD AND GENERATING DEVICE

(51) International classification :H05H1/24,C01B13/10,C01B13/11
(31) Priority Document No :2011100622
(32) Priority Date :28/04/2011
(33) Name of priority country :Japan
(86) International Application No :PCT/JP2012/061343
Filing Date :27/04/2012
(87) International Publication No :WO 2012/147911
(61) Patent of Addition to Application Number :NA
Filing Date :NA
(62) Divisional to Application Number :NA
Filing Date :NA

(71)**Name of Applicant :**
1)ASAHI ORGANIC CHEMICALS INDUSTRY CO. LTD.
Address of Applicant :5955 Nakanose cho 2 chome Nobeoka city Miyazaki 8828688 Japan
(72)**Name of Inventor :**
1)NAKASHIMA Hideyuki
2)SAKOTA Tatsuya
3)BABA Seiji

(57) Abstract :
To provide a plasma generating method and a generating device that cause an electrical discharge to occur between a fluid and a dielectric tube. [Solution] A method for generating plasma with an electrical discharge within a dielectric tube by applying a voltage to a supplied gas wherein: a water passage pipe is positioned within or above the dielectric tube; a high voltage electrode is arranged on the outer side of the dielectric tube; and a grounding electrode is arranged in a fluid that is discharged through the water passage pipe and into the dielectric tube while remaining at a distance from the inner perimeter of the dielectric tube. An electrical discharge is caused to occur either between the inner wall of the dielectric tube and the fluid or between the inner wall of the dielectric tube and the water passage pipe by applying a voltage to the high voltage electrode and the grounding electrode connected to a power source device. Additionally the connections of the dielectric tube the water passage pipe and an inlet which introduces the supplied gas is formed to have the structure of an aspirator.

No. of Pages : 39 No. of Claims : 17

(12) PATENT APPLICATION PUBLICATION
(19) INDIA
(22) Date of filing of Application :04/11/2013
(21) Application No.9479/DELNP/2013 A
(43) Publication Date : 19/12/2014

(54) Title of the invention : BYPASS VALVE AND TURBOCHARGER

(51) International classification :F02B37/16,F02B39/00
(31) Priority Document No :2011110296
(32) Priority Date :17/05/2011
(33) Name of priority country :Japan
(86) International Application No :PCT/JP2012/062273
Filing Date :14/05/2012
(87) International Publication No :WO 2012/157598
(61) Patent of Addition to Application Number :NA
Filing Date :NA
(62) Divisional to Application Number :NA
Filing Date :NA

(71)**Name of Applicant :**
1)IHI Corporation
Address of Applicant :1 1 Toyosu 3 chome Koto ku Tokyo 1358710 Japan
(72)**Name of Inventor :**
1)MURAYAMA Tomokazu

(57) Abstract :
A bypass valve which, m an open state, diverts a part o f compressed air within a scroll section t o the upstream side o f the scroll section through a bypass con duit, and which, in a closed state, allows the compressed air within the scroll section t o flow t o the downstream side. The bypass valve i s provided with: a valve body which i s configured so that the valve body can b e fitted in a branch hole for connecting the scroll section and the bypass conduit; and an actuator for moving the valve body between a closed state in which the valve body i s fitted in the branch hole and an open state in which the valve body i s separ ated fiOm the branch hole. The valve body i s configured so that, in the closed state, the valve body forms an inner surface which extends along the inner wall o f the scroll section.

No. of Pages : 29 No. of Claims : 8

(12) PATENT APPLICATION PUBLICATION
(19) INDIA
(22) Date of filing of Application :06/11/2013
(21) Application No.9571/DELNP/2013 A
(43) Publication Date : 19/12/2014

(54) Title of the invention : 3 SPIROCYCLIC PIPERIDINE DERIVATIVES AS GHRELIN RECEPTOR AGONISTS

(51) International classification :C07D471/10,C07D487/10,A61K31/438
(31) Priority Document No :61/490848
(32) Priority Date :27/05/2011
(33) Name of priority country :U.S.A.
(86) International Application No :PCT/IB2012/052649
Filing Date :25/05/2012
(87) International Publication No :WO 2012/164473
(61) Patent of Addition to Application Number :NA
Filing Date :NA
(62) Divisional to Application Number :NA
Filing Date :NA

(71)**Name of Applicant :**
1)NOVARTIS AG
Address of Applicant :Lichtstrasse 35 CH 4056 Basel Switzerland
(72)**Name of Inventor :**
1)AMBARKHANE Ameet Vijay
2)BHALAY Gurdip
3)BECKETT Martin
4)DALE James
5)HAMADI Ahmed
6)MAZZACANI Alessandro
7)MCKENNA Jeffrey
8)THOMSON Christopher

(57) Abstract :
The invention relates to derivatives of formula (I) wherein the substituents are as defined in the specification; to processes for the preparation of such derivatives; pharmaceutical compositions comprising such derivatives; such derivatives as a medicament; such derivatives for the treatment of a disorder or a disease mediated by the ghrelin receptor.

No. of Pages : 198 No. of Claims : 25

(12) PATENT APPLICATION PUBLICATION
(19) INDIA
(22) Date of filing of Application :06/11/2013
(21) Application No.9572/DELNP/2013 A
(43) Publication Date : 19/12/2014

(54) Title of the invention : BACTERIAL MRNA SCREEN STRATEGY FOR NOVEL PESTICIDE ENCODING NUCLEIC ACID MOLECULE DISCOVERY

(51) International classification :C12N15/82
(31) Priority Document No :61/481442
(32) Priority Date :02/05/2011
(33) Name of priority country :U.S.A.
(86) International Application No :PCT/US2012/035740
Filing Date :30/04/2012
(87) International Publication No :WO 2012/151145
(61) Patent of Addition to Application Number :NA
Filing Date :NA
(62) Divisional to Application Number :NA
Filing Date :NA

(71)**Name of Applicant :**
1)PIONEER HI BRED INTERNATIONAL INC.
Address of Applicant :7100 N.W. 62nd Avenue Johnston Iowa 50131 1014 U.S.A.
(72)**Name of Inventor :**
1)ABAD Andre R.
2)KAPKA KITZMAN Deirdre M.

(57) Abstract :
Methods are provided for isolating and identifying novel pesticide encoding nucleic acid molecules from bacterial strains identified as having a pesticidal polypeptide. The methods involve selecting a bacterial strain having or suspected of having at least one pesticide encoding plasmid curing the at least one pesticide encoding plasmid from the bacterial strain and performing a subtractive hybridization to obtain plasmid mRNA encoding the pesticidal polypeptide. The plasmid mRNA can be used to make a cDNA library from which the pesticidal polypeptide can be isolated and subsequently identified.

No. of Pages : 48 No. of Claims : 17

(12) PATENT APPLICATION PUBLICATION
(19) INDIA
(22) Date of filing of Application :06/11/2013
(21) Application No.9573/DELNP/2013 A
(43) Publication Date : 19/12/2014

(54) Title of the invention : MULTIPLE ACTIVATION CONTACT LIGHTER

(51) International classification :F23Q2/28
(31) Priority Document No :13/093078
(32) Priority Date :25/04/2011
(33) Name of priority country :U.S.A.
(86) International Application No :PCT/US2011/065992
Filing Date :20/12/2011
(87) International Publication No :WO 2012/148479
(61) Patent of Addition to Application Number :NA
Filing Date :NA
(62) Divisional to Application Number :NA
Filing Date :NA

(71)**Name of Applicant :**
1)ZIPPO MANUFACTURING COMPANY
Address of Applicant :33 Barbour Street Bradford PA 16701 U.S.A.
(72)**Name of Inventor :**
1)ADAMS Paul H.

(57) Abstract :
The present invention relates to a lighter. The lighter includes a housing having a supply of fuel an activating unit movably associated with the housing to selectively ignite the fuel and at least two separate contact areas such that the user can apply enough force or torque with at least two fingers to overcome the torque/forces required to activate piezo release the fuel the flame in which the activating unit has at least one internal surface.

No. of Pages : 49 No. of Claims : 27

(12) PATENT APPLICATION PUBLICATION
(19) INDIA
(22) Date of filing of Application :06/11/2013
(21) Application No.9574/DELNP/2013 A
(43) Publication Date : 19/12/2014

(54) Title of the invention : METHOD FOR PRODUCING OLIGONUCLEOTIDE

(51) International classification :C07H21/00
(31) Priority Document No :2011110872
(32) Priority Date :17/05/2011
(33) Name of priority country :Japan
(86) International Application No :PCT/JP2012/062708
Filing Date :17/05/2012
(87) International Publication No :WO 2012/157723
(61) Patent of Addition to Application Number :NA
Filing Date :NA
(62) Divisional to Application Number :NA
Filing Date :NA

(71)**Name of Applicant :**
1)AJINOMOTO CO. INC.
Address of Applicant :15 1 Kyobashi 1 chome Chuo ku Tokyo 1048315 Japan
(72)**Name of Inventor :**
1)HIRAI Kunihiro
2)KATAYAMA Satoshi

(57) Abstract :
The problem of the present invention is provision of a method of producing an n+p-mer oligonucleotide efficiently in 5 a high yield, which includes use of, as a starting material, an n-mer oligonucleotide wherein the 3-terminal hydroxyl group is protected, and the 5-terminal hydroxyl group is protected by a temporary protecting group, and continuously performing, in a solution, (1) a deprotection step of the 5- 10 terminal hydroxyl group, (2) a 5-terminal elongation step by the addition of a p-mer oligonucleotide wherein the 3-position is phosphoramidited, and (3) an oxidation step or a sulfurization step of a phosphite triester moiety. It has been found that the above-mentioned problem can be 15 solved by adding a particular cation scavenger during the deprotection step, applying a neutralization treatment after completion of the deprotection reaction, and using a particular oxidizing agent or sulfurizing agent in the oxidation step or sulfurization step.

No. of Pages : 126 No. of Claims : 23

(12) PATENT APPLICATION PUBLICATION
(19) INDIA
(22) Date of filing of Application :04/11/2013
(21) Application No.9481/DELNP/2013 A
(43) Publication Date : 19/12/2014

(54) Title of the invention : METHOD FOR CAPTURING AND RECYCLING IRON CATALYST USED IN THE PRODUCTION OF HALOALKANE COMPOUNDS

(51) International classification :B01J23/745,C07C21/06,B01J19/20
(31) Priority Document No :61/492907
(32) Priority Date :03/06/2011
(33) Name of priority country :U.S.A.
(86) International Application No :PCT/US2012/040070
Filing Date :31/05/2012
(87) International Publication No :WO 2012/166836
(61) Patent of Addition to Application Number :NA
Filing Date :NA
(62) Divisional to Application Number :NA
Filing Date :NA

(71)**Name of Applicant :**
1)HONEYWELL INTERNATIONAL INC.
Address of Applicant :Patent Services M/S AB/2B 101 Columbia Road P.O. Box 2245 Morristown New Jersey 07962 2245 U.S.A.
(72)**Name of Inventor :**
1)CLOSE Joshua
2)WANG Haiyou
3)TUNG Hsueh Sung
4)COTTRELL Stephen A.

(57) Abstract :
Disclosed is a method for capturing and recycling iron catalyst used in the production of haloalkane compounds and more particularly to an improved process for the manufacture of the compound 1,1,1,3,3 pentachloropropane (HCC 240fa) in which an electromagnetic separation unit (EMSU) is used to facilitate the reaction. When energized the EMSU functions to remove the iron particles from the reactor effluent; when de energized the iron particles captured by the EMSU can be flushed back into the reactor for re use in the continued production of HCC 240fa. The present invention is also useful in the manufacturing processes for other haloalkane compounds such as HCC 250 and HCC 360.

No. of Pages : 11 No. of Claims : 9

(12) PATENT APPLICATION PUBLICATION
(19) INDIA
(22) Date of filing of Application :04/11/2013
(21) Application No.9483/DELNP/2013 A
(43) Publication Date : 19/12/2014

(54) Title of the invention : APPARATUS AND METHOD FOR CUTTING PRODUCTS

(51) International classification :B26D7/06,B26D1/36
(31) Priority Document No :61/473826
(32) Priority Date :11/04/2011
(33) Name of priority country :U.S.A.
(86) International Application No :PCT/EP2012/056401
Filing Date :10/04/2012
(87) International Publication No :WO 2012/139988
(61) Patent of Addition to Application Number :NA
Filing Date :NA
(62) Divisional to Application Number :NA
Filing Date :NA

(71)**Name of Applicant :**
1)FAM
Address of Applicant :Neerveld 2 B 2550 Kontich Belgium
(72)**Name of Inventor :**
1)BUCKS Brent L.

(57) Abstract :
Apparatus for cutting products, comprising: a base (100); a cutting head (200) with at least one cutting ele ment along the circumference of the cutting head for cutting products fed into the cutting head, the cutting head being ro - tatably fitted to the base; an impeller (300) adapted for rotat ing concentrically within the cutting head (200) to urge 203 products fed into the cutting head towards the circumference of the cutting head by means of centrifugal force; a first drive mechanism (301-303) for driving the rotation of the impeller at a first rotational speed setting the centrifugal force; and a second drive mechanism (201-203) for driving the rotation of the cutting head at a second rotational speed, determined such with respect to the first rotational speed that the product is cut by the at least one cutting element at a predetermined 303 cutting velocity

No. of Pages : 47 No. of Claims : 45

(12) PATENT APPLICATION PUBLICATION
(19) INDIA
(22) Date of filing of Application :04/11/2013
(21) Application No.9484/DELNP/2013 A
(43) Publication Date : 19/12/2014

(54) Title of the invention : APPARATUS AND METHOD FOR THE TREATMENT OF A FLAT STEEL PRODUCT, TAKING PLACE IN THROUGHPUT

(51) International classification :C21D9/56,F27B9/06,F27B9/30
(31) Priority Document No :10 2011 050 243.2
(32) Priority Date :10/05/2011
(33) Name of priority country :Germany
(86) International Application No :PCT/EP2012/055854
Filing Date :30/03/2012
(87) International Publication No :WO 2012/152508
(61) Patent of Addition to Application Number :NA
Filing Date :NA
(62) Divisional to Application Number :NA
Filing Date :NA

(71)**Name of Applicant :**
1)THYSSENKRUPP STEEL EUROPE AG
Address of Applicant :Kaiser Wilhelm Str. 100 47166 Duisburg Germany
(72)**Name of Inventor :**
1)BLUMENAU Marc
2)MACHALITZA Karsten
3)PETERS Michael
4)SCH–NENBERG Rudolf
5)ZEIZINGER Sabine
6)NORDEN Martin

(57) Abstract :
The invention relates to a device and to a method for treating a steel sheet product (S) in a continuous manner. The device according to the invention comprises an indirectly heated annealing furnace Chamber (1), a conveying System for continuously conveying the steel sheet product (S) over a conveyance path (4) leading from an inlet (5) of the annealing furnace Chamber (1) to an outlet (6) of the annealing furnace Chamber (1), and a nozzle assembly (Dl, D2) for feeding atmospheric gas that is reactive with regard to the steel sheet product (S) into the annealing furnace Chamber (1). In order to carry out a targeted treatment of the respective steel sheet product in a continuous manner in a way that is particularly economical and also reliable in Operation, a first nozzle assembly (Dl), from which a gas jet (G) exits during the treatment, which gas jet is directed in the direction of the inlet (5) of the annealing furnace Chamber (1) and effects a first gas flow (Gl) flowing over the surface of the steel sheet product (S) to be treated, and a second nozzle assembly (D2), from which a gas jet (G) exits during the treatment, which gas jet is directed in the direction of the outlet (6) of the annealing furnace Chamber (1) and effects a second gas flow (G2) flowing over the surface of the steel sheet product (S) to be treated, are provided according to the invention.

No. of Pages : 34 No. of Claims : 18

(12) PATENT APPLICATION PUBLICATION
(19) INDIA
(22) Date of filing of Application :04/11/2013
(21) Application No.9485/DELNP/2013 A
(43) Publication Date : 19/12/2014

(54) Title of the invention : HOT PRESS MOLDING METHOD AND HOT PRESS MOLDING DIE

(51) International classification :B21D24/00,B21D37/16
(31) Priority Document No :2011115176
(32) Priority Date :23/05/2011
(33) Name of priority country :Japan
(86) International Application No :PCT/JP2012/063075
Filing Date :22/05/2012
(87) International Publication No :WO 2012/161192
(61) Patent of Addition to Application Number :NA
Filing Date :NA
(62) Divisional to Application Number :NA
Filing Date :NA

(71)**Name of Applicant :**
1)NIPPON STEEL & SUMITOMO METAL CORPORATION
Address of Applicant :6-1 Marunouchi 2 chome Chiyoda ku Tokyo 1008071 Japan
(72)**Name of Inventor :**
1)FUKUCHI Hiroshi
2)ISHIMORI Yuichi

(57) Abstract :
The present invention provides a hot press molding method for molding a heated metallic plate (K) using a molding die (20, 60) comprising an upper die (21) and a lower die (20). According to the method, the heated metallic plate is arranged between the upper die and the lower die, the upper die and the lower die are brought together, and the metallic plate held between the dies is pressed. After the metallic plate is pressed, a remgerant in the form of a liquid or mist is supplied via a plurality of supply holes provided to the lower die to a surface of the metallic plate held between the dies, and once the refrigerant has finished being supplied, a gas is sprayed onto the surface of the metallic plate via the plurality of supply holes. It is thereby possible to remove, with maximum speed, liquid refrigerant adhering to the metallic plate when the supply of liquid refrigerant is stopped.

No. of Pages : 37 No. of Claims : 10

(12) PATENT APPLICATION PUBLICATION
(19) INDIA
(22) Date of filing of Application :06/11/2013
(21) Application No.9575/DELNP/2013 A
(43) Publication Date : 19/12/2014

(54) Title of the invention : COMPOSITIONS AND METHODS FOR AUTOLOGOUS GERMLINE MITOCHONDRIAL ENERGY TRANSFER

(51) International classification :C12N5/075
(31) Priority Document No :61/475561
(32) Priority Date :14/04/2011
(33) Name of priority country :U.S.A.
(86) International Application No :PCT/US2012/033643
Filing Date :13/04/2012
(87) International Publication No :WO 2012/142500
(61) Patent of Addition to Application Number :NA
Filing Date :NA
(62) Divisional to Application Number :NA
Filing Date :NA

(71)**Name of Applicant :**
1)THE GENERAL HOSPITAL CORPORATION
Address of Applicant :55 Fruit Street Boston MA 02114 U.S.A.
(72)**Name of Inventor :**
1)TILLY Jonathan Lee
2)WOODS Dori C.

(57) Abstract :
Oogonial stem cell (OSC)-derived composi tions, such as nuclear free cytoplasm or isolated mitochon dria, and uses of OSC-derived compositions in autologous fertility-enhancing procedures are described.

No. of Pages : 99 No. of Claims : 57

(12) PATENT APPLICATION PUBLICATION
(19) INDIA
(22) Date of filing of Application :06/11/2013
(21) Application No.9576/DELNP/2013 A
(43) Publication Date : 19/12/2014

(54) Title of the invention : NOZZLES FOR NASAL DRUG DELIVERY

(51) International classification :B05B1/02
(31) Priority Document No :61/484048
(32) Priority Date :09/05/2011
(33) Name of priority country :U.S.A.
(86) International Application No :PCT/US2012/037132
Filing Date :09/05/2012
(87) International Publication No :WO 2012/154859
(61) Patent of Addition to Application Number :NA
Filing Date :NA
(62) Divisional to Application Number :NA
Filing Date :NA

(71)**Name of Applicant :**
1)IMPEL NEUROPHARMA INC.
Address of Applicant :720 Broadway Avenue Suite 413 Seattle WA 98122 4302 U.S.A.
(72)**Name of Inventor :**
1)HOEKMAN John D.
2)HITE Michael
3)BRUNELLE Alan
4)RELETHFORD Joel

(57) Abstract :
A nozzle for use in delivering a mixture of aerosol propellant and drug formulation. The nozzle includes a drug product inlet configured to receive a mixture of aerosolized propellant and an intranasal dosage form. The inlet is disposed at the proximal end. A nozzle body is secured to the drug product inlet. Two or more channels are disposed within the body. Two or more orifice apertures are disposed at the distal end of the nozzle.

No. of Pages : 64 No. of Claims : 25

(12) PATENT APPLICATION PUBLICATION
(19) INDIA
(22) Date of filing of Application :06/11/2013
(21) Application No.9577/DELNP/2013 A
(43) Publication Date : 19/12/2014

(54) Title of the invention : PROTECTIVE DEVICE FOR THE LASER MACHINING OF HOLES IN COMPONENTS

(51) International classification :B23K26/38,F02M61/16
(31) Priority Document No :102011079815.3
(32) Priority Date :26/07/2011
(33) Name of priority country :Germany
(86) International Application No :PCT/EP2012/062019
Filing Date :21/06/2012
(87) International Publication No :WO 2013/013909
(61) Patent of Addition to Application Number :NA
Filing Date :NA
(62) Divisional to Application Number :NA
Filing Date :NA

(71)**Name of Applicant :**
1)ROBERT BOSCH GMBH
Address of Applicant :Postfach 30 02 20 70442 Stuttgart Germany
(72)**Name of Inventor :**
1)BAUER Thorsten
2)GRAF Ulrich

(57) Abstract :
The invention relates to a protective device (1) for the laser machining of holes (3) in at least one component (2) by means of a laser beam (5), wherein the protective device (1) is positionable in the beam direction downstream of the beam-exit-side end (8) of a hole (3) to be machined in the component wall (10), in order to protect an adjoining rear space having a component wall (11), opposite the hole (3), of the component (2) from the incident laser beam. The protective device (1) according to the invention is formed from a composite made of a matrix composed of polyether ether ketone plastics material and fibers embedded therein, wherein the fibers are embedded such that, with respect to their particular fiber extending direction, they extend in a criss-cross manner in the plastics material and are distributed at approximately the same density in the volume of the plastics material of the protective device (1). The fibers are configured as glass fibers or carbon fibers in order to split the laser beam (5) passing into the composite and to reduce the energy density thereof.

No. of Pages : 12 No. of Claims : 12

(12) PATENT APPLICATION PUBLICATION
(19) INDIA
(22) Date of filing of Application :06/11/2013
(21) Application No.9578/DELNP/2013 A
(43) Publication Date : 19/12/2014

(54) Title of the invention : DEVICE AND METHOD FOR WARNING A DRIVER OF A MOTOR VEHICLE

(51) International classification :G08G1/16,B60Q1/52
(31) Priority Document No :10 2011 077 384.3
(32) Priority Date :10/06/2011
(33) Name of priority country :Germany
(86) International Application No :PCT/EP2012/060506
Filing Date :04/06/2012
(87) International Publication No :WO 2012/168187
(61) Patent of Addition to Application Number :NA
Filing Date :NA
(62) Divisional to Application Number :NA
Filing Date :NA

(71)**Name of Applicant :**
1)ROBERT BOSCH GMBH
Address of Applicant :Postfach 30 02 20 70442 Stuttgart Germany
(72)**Name of Inventor :**
1)DE SCISCIO Andrea
2)SCHNEIDER Marcus

(57) Abstract :
The invention relates to a method for warning a driver of a motor vehicle by means of a visual and/or acoustic warning signal (5). An object is detected using a sensor which detects an angular field that opens opposite the driving direction of the motor vehicle and which is associated with a side of the motor vehicle. At least one driving direction-relevant parameter is detected by means of a control unit, and the presence of a traffic situation that demands an immediate warning signal (5) is ascertained using a decision algorithm that processes the at least one driving direction-relevant parameter as input. If a situation exists that demands an immediate warning signal (5), an immediate warning signal (5) is triggered. If a driving situation that demands an immediate warning signal (5) does not exist, a delay that corresponds to the driving situation is ascertained, and the warning signal (5) is triggered with the ascertained delay.

No. of Pages : 16 No. of Claims : 10

(12) PATENT APPLICATION PUBLICATION
(19) INDIA
(22) Date of filing of Application :06/11/2013
(21) Application No.9579/DELNP/2013 A
(43) Publication Date : 19/12/2014

(54) Title of the invention : PRESS IN PIN FOR AN ELECTRICAL PRESS IN CONNECTION BETWEEN AN ELECTRONIC COMPONENT AND A SUBSTRATE PLATE

(51) International classification :H01R13/03
(31) Priority Document No :10 2011 077 915.9
(32) Priority Date :21/06/2011
(33) Name of priority country :Germany
(86) International Application No :PCT/EP2012/059970
Filing Date :29/05/2012
(87) International Publication No :WO 2012/175286
(61) Patent of Addition to Application Number :NA
Filing Date :NA
(62) Divisional to Application Number :NA
Filing Date :NA

(71)**Name of Applicant :**
1)ROBERT BOSCH GMBH
Address of Applicant :Postfach 30 02 20 70442 Stuttgart Germany
(72)**Name of Inventor :**
1)MOSER Manfred

(57) Abstract :
The invention relates to a press-in pin (1, 2) for an electrical press-in connection between an electronic component (3) and a substrate plate (4) with an electrical contact hole (5). The press-in pin (1,2) has a press-in pin head (6) which has a press-in head length (IK) which is matched to a thickness (d) of the substrate plate (4). A press-in pin leg (7) extends between the electronic component (3) and the press-in pin head (6). A press-in pin collar (13) forms a transition between the press-in pin leg (7) and the press-in pin head (6) and has a locking projection (14). The press-in pin head (6) is coated with a layer (20) of a lead-free tin alloy (15). At least the press-in pin collar (13) with the locking projection (14) has an electrically insulating coating (16).

No. of Pages : 15 No. of Claims : 10

(12) PATENT APPLICATION PUBLICATION
(19) INDIA
(22) Date of filing of Application :06/11/2013
(21) Application No.9550/DELNP/2013 A
(43) Publication Date : 19/12/2014

(54) Title of the invention : WEAR PIN GAP CLOSURE DETECTION SYSTEM FOR GAS TURBINE ENGINE

(51) International classification :F01D11/00,F01D21/04,F04D27/02
(31) Priority Document No :13/113351
(32) Priority Date :23/05/2011
(33) Name of priority country :U.S.A.
(86) International Application No :PCT/US2012/037873
Filing Date :15/05/2012
(87) International Publication No :WO 2012/162016
(61) Patent of Addition to Application Number :NA
Filing Date :NA
(62) Divisional to Application Number :NA
Filing Date :NA

(71)**Name of Applicant :**
1)SIEMENS ENERGY INC.
Address of Applicant :4400 Alafaya Trail Orlando Florida 32826 2399 U.S.A.
(72)**Name of Inventor :**
1)SINGH Ram Bahadur
2)WASDELL David L.
3)MILLER Keith A.

(57) Abstract :
A wear indication system (10) for use in turbine engines to measure the rate of gap closure between a seal holder (12) and a rotor disk in a compressor blade assembly (16) includes a support system capable of supporting a wear indicator (20) formed o from a relatively soft wear material without enabling the wear indicator (20) to shift position or to fall out. One or more wear pins (22) are releasably attached to a compression plate (24) with a seal holder (12). The seal holder (12) restrains the wear pin (22) in position in an interference fit. During turbine engine operation, the wear pin (22) is used to determine the rate of gap closing between a rotor disk (14) and a seal holder (12) precisely so that gas turbine engine repair can be scheduled and proper actions be taken to prevent rubbing between rotating and stationary parts of a compressor.

No. of Pages : 15 No. of Claims : 11

(12) PATENT APPLICATION PUBLICATION
(19) INDIA
(22) Date of filing of Application :06/11/2013
(21) Application No.9551/DELNP/2013 A
(43) Publication Date : 19/12/2014

(54) Title of the invention : PROCESS AND APPARATUS FOR PRODUCTION OF HALOGENATED BUTYL RUBBER WITH REDUCED EMISSIONS

(51) International classification :C08C19/12,C08L23/28
(31) Priority Document No :11167595.5
(32) Priority Date :26/05/2011
(33) Name of priority country :EPO
(86) International Application No :PCT/CA2012/000485
Filing Date :18/05/2012
(87) International Publication No :WO 2012/159198
(61) Patent of Addition to Application Number :NA
Filing Date :NA
(62) Divisional to Application Number :NA
Filing Date :NA

(71)**Name of Applicant :**
1)LANXESS INTERNATIONAL S.A.
Address of Applicant :Route Louis Braille 12 CH 1763 Granges Paccot Switzerland
(72)**Name of Inventor :**
1)GR–MPING Tobias
2)BACH Sven
3)B„CKER Werner
4)CHEN Wei
5)NGUYEN Paul
6)ALAM Kevin
7)WISE Robert Michael
8)MULDER Thomas

(57) Abstract :
The present invention relates to a process for the production of halogenated butyl rubber and an apparatus for the production of rubber cement for use in the production of halogenated butyl rubber. The process and apparatus permit direct mixing of aqueous rubber slurry with a non halogenated organic solvent to make a rubber cement solution. The water layer is then separated from the partially dissolved rubber cement and the cement phase is sent for halogenation. The apparatus is an enclosed vessel comprised of at least one dissolving zone and at least one separator zone. The process and apparatus advantageously employ recycle of rubber cement in order to disrupt an interface layer that forms between the water and rubber cement to thereby improve continuously operation of the process.

No. of Pages : 36 No. of Claims : 16

(12) PATENT APPLICATION PUBLICATION
(19) INDIA
(22) Date of filing of Application :06/11/2013
(21) Application No.9552/DELNP/2013 A
(43) Publication Date : 19/12/2014

(54) Title of the invention : FASTENER ASSEMBLY AND SYSTEM FOR MANUFACTURING THE SAME

(51) International classification :G09F3/14,B29C47/32
(31) Priority Document No :13/102509
(32) Priority Date :06/05/2011
(33) Name of priority country :U.S.A.
(86) International Application No :PCT/US2012/035929
Filing Date :01/05/2012
(87) International Publication No :WO 2012/154442
(61) Patent of Addition to Application Number :NA
Filing Date :NA
(62) Divisional to Application Number :NA
Filing Date :NA

(71)**Name of Applicant :**
1)AVERY DENNISON CORPORATION
Address of Applicant :150 N. Orange Grove Blvd. Pasadena CA 91103 U.S.A.
(72)**Name of Inventor :**
1)BUROUT Charles J.
2)SHILALE Thomas

(57) Abstract :
A fastener assembly (11) includes a molded plastic fastener (13) shaped to define a filament (21) a paddle (35) at one end of the filament (21) and a cross bar (17) at the other end of the filament (21). The fastener assembly (11) additionally includes a printed label (15) embedded in the paddle (35) the printed label (15) including an electrically chargeable stiffness enhancing laminate that is applied to a print receptive polymer substrate. An inline system for manufacturing a continuously connected supply of the fastener assemblies (11) includes a rotatable mold wheel a feed mechanism for advancing a continuous ionized printed polymer web in a near tangential relationship relative to the mold wheel periphery a cutting mechanism for transversely cutting through the web to form a plurality of rectangular printed labels (15) that are magnetically drawn into corresponding cavities in the mold wheel an extruder for applying molten plastic into the cavities and a knife for skiving excess hardened plastic from the mold wheel periphery.

No. of Pages : 26 No. of Claims : 15

(12) PATENT APPLICATION PUBLICATION
(19) INDIA
(22) Date of filing of Application :06/11/2013
(21) Application No.9553/DELNP/2013 A
(43) Publication Date : 19/12/2014

(54) Title of the invention : PLASTIC FASTENING DEVICE COMPRISING A RECYCLED THERMOPLASTIC RESIN

(51) International classification :G09F3/14,B29C47/32
(31) Priority Document No :13/102509
(32) Priority Date :06/05/2011
(33) Name of priority country :U.S.A.
(86) International Application No :PCT/US2012/035930
Filing Date :01/05/2012
(87) International Publication No :WO 2012/154443
(61) Patent of Addition to Application Number :NA
Filing Date :NA
(62) Divisional to Application Number :NA
Filing Date :NA

(71)**Name of Applicant :**
1)AVERY DENNISON CORPORATION
Address of Applicant :150 N. Orange Grove Blvd. Pasadena CA 91103 U.S.A.
(72)**Name of Inventor :**
1)SHILALE Thomas
2)BUROUT Charles J.

(57) Abstract :
A plastic fastening device (10) that includes a recycled material. In one embodiment at least a portion of the fastening device (10) includes a blend of two or more thermoplastic resins at least one of which is a recycled material. The blend may include for example a fresh thermoplastic resin and a recycled thermoplastic resin. The fresh thermoplastic resin may include for example one or more of a polyethylene (PE) a polyamide (PA) or a polycarbonate (PC). The recycled thermoplastic resin may include for example a recycled polyethylene terephthalate (rPET). In a preferred embodiment the blend of two or more thermoplastic resins includes a blend of (i) rPET and (ii) one of a low density polyethylene (LDPE) a LDPE/LLDPE (linear low density polyethylene) blend and LLDPE (iii) wherein the rPET constitutes about 88% to 98% of the total material content and the LDPE the LDPE/LLDPE blend or the LLDPE constitutes the balance.

No. of Pages : 26 No. of Claims : 20

(12) PATENT APPLICATION PUBLICATION
(19) INDIA
(22) Date of filing of Application :21/10/2013
(21) Application No.9046/DELNP/2013 A
(43) Publication Date : 19/12/2014

(54) Title of the invention : SYSTEMS AND METHODS FOR USE IN EMISSION GUIDED RADIATION THERAPY

(51) International classification :H01J29/02
(31) Priority Document No :61/470432
(32) Priority Date :31/03/2011
(33) Name of priority country :U.S.A.
(86) International Application No :PCT/US2012/031704
Filing Date :30/03/2012
(87) International Publication No :WO 2012/135771
(61) Patent of Addition to Application Number :NA
Filing Date :NA
(62) Divisional to Application Number :NA
Filing Date :NA

(71)**Name of Applicant :**
1)REFLEXION MEDICAL INC.
Address of Applicant :1633 Bayshore Highway Suite 126 Burlingame CA 94010 U.S.A.
(72)**Name of Inventor :**
1)MAZIN Samuel
2)NANDURI Akshay

(57) Abstract :
Described herein are systems and methods for positioning a radiation source with respect to one or more regions of interest in a coordinate system. Such systems and methods may be used in emission guided radiation therapy (EGRT) for the localized delivery of radiation to one or more patient tumor regions. These systems comprise a gantry movable about a patient area, where a plurality of positron emission detectors, a radiation source are arranged movably on the gantry, and a controller. The controller is configured to identify a coincident positron annihilation emission path and to position the radiation source to apply a radiation beam along the identified emission path. The systems and methods described herein can be used alone or in conjunction with surgery, chemotherapy, and/or brachytherapy for the treatment of tumors.

No. of Pages : 75 No. of Claims : 28

(12) PATENT APPLICATION PUBLICATION
(19) INDIA
(22) Date of filing of Application :21/10/2013
(21) Application No.9047/DELNP/2013 A
(43) Publication Date : 19/12/2014

(54) Title of the invention : THERANOSTIC IMAGING AGENTS AND METHODS OF USE

(51) International classification :A61K47/48,A61K47/30,A61K9/16
(31) Priority Document No :61/470054
(32) Priority Date :31/03/2011
(33) Name of priority country :U.S.A.
(86) International Application No :PCT/US2012/031396
Filing Date :30/03/2012
(87) International Publication No :WO 2012/135592
(61) Patent of Addition to Application Number :NA
Filing Date :NA
(62) Divisional to Application Number :NA
Filing Date :NA

(71)**Name of Applicant :**
1)THE JOHNS HOPKINS UNIVERSITY
Address of Applicant :3400 North Charles Street Baltimore Maryland 21218 U.S.A.
(72)**Name of Inventor :**
1)POMPER Martin
2)BHUJWALLA Zaver
3)CHEN Zhihang
4)LI Cong
5)NIMMAGADDA Sridhar
6)PENET Marie France
7)RAY Sangeeta

(57) Abstract :
The present invention provides targeted nanoplex molecules which carry multimodality imaging reporters together with target enzyme inhibitors such as siRNAs and target prodrug enzymes, that are useful for theranostic imaging of cells and dis - eases, including, for example, various cancers, and including metastatic prostate cancer. The nanoplex molecules of the present invention provide a platform technology toward many cancer subtypes and alternative therapeutic targets. Downregulation of specific pathways using targeted enzyme inhibitors further provides unique opportunities to target cancer cells selectively while sparing normal tissue. The nanoplex molecule platform described herein has the ability to deliver multiple siRNA enzyme inhibitors. Methods of diagnosis and treatment of various diseases are also included. The strategy described herein can be useful to down-regulate multidrug resistance pathways, or repair enzymes with the goal of increasing the efficacy, safety, and efficiency of chemotherapeutic or irradiation therapies.

No. of Pages : 48 No. of Claims : 23

(12) PATENT APPLICATION PUBLICATION
(19) INDIA
(22) Date of filing of Application :21/10/2013
(21) Application No.9048/DELNP/2013 A
(43) Publication Date : 19/12/2014

(54) Title of the invention : METHOD FOR CLEANING DRILLING FLUID IN ROCK SAMPLING DRILLING AND A CLEANING UNIT

(51) International classification :E21B21/06,B01D21/08
(31) Priority Document No :20115311
(32) Priority Date :31/03/2011
(33) Name of priority country :Finland
(86) International Application No :PCT/FI2012/000019
Filing Date :30/03/2012
(87) International Publication No :WO 2012/131146
(61) Patent of Addition to Application Number :NA
Filing Date :NA
(62) Divisional to Application Number :NA
Filing Date :NA

(71)**Name of Applicant :**
1)OY KATI AB KALAJOKI
Address of Applicant :Sievintie 286 FI 85160 Rautio Finland
(72)**Name of Inventor :**
1)NISKAKANGAS Tapani

(57) Abstract :
The main idea of the invention is to recover drilling fluid used in sample drilling at a drilling machine, when the drilling fluid exits the drill hole, and to transport it to a separate cleaning unit (501). In the cleaning unit solid matter is separated from the drilling fluid. The cleaned drilling fluid is returned to the drilling machine and reused in sample drilling. The cleaning unit has a connection (701) for feeding uncleaned drilling fluid into the cleaning unit and two or more precipitation basins (604, 605, 606, 607), where the solid matter contained in the drilling fluid is arranged to accumulate on the bottom of the basin. In the bottom part of at least one precipitation basin there is a valve arrangement (703) for removing drilling fluid sludge containing solid matter from the precipitation basin, which drilling fluid sludge is filtered with a filter arrangement (609). In the top part of the precipitation basin there is a transfer connection (610) between precipitation basins or an outlet connection (61 1) for taking cleaned drilling fluid out from the cleaning unit back to the drilling process. The cleaning unit is placed in one or more container or corresponding struc - hire meant to be moved.

No. of Pages : 30 No. of Claims : 18

(12) PATENT APPLICATION PUBLICATION
(19) INDIA
(22) Date of filing of Application :07/11/2013
(21) Application No.9595/DELNP/2013 A
(43) Publication Date : 19/12/2014

(54) Title of the invention : ENDODONTIC FILE

(51) International classification :A61C5/02
(31) Priority Document No :212422
(32) Priority Date :17/04/2011
(33) Name of priority country :Israel
(86) International Application No :PCT/IL2012/000139
Filing Date :01/04/2012
(87) International Publication No :WO 2012/143918
(61) Patent of Addition to Application Number :NA
Filing Date :NA
(62) Divisional to Application Number :NA
Filing Date :NA

(71)**Name of Applicant :**
1)MEDIC NRG LTD.
Address of Applicant :Kibbutz Afikim 15148 Israel
(72)**Name of Inventor :**
1)BECKER Arik
2)LEVY Haim
3)BERKOVICH Shlomo
4)KATAN Uri

(57) Abstract :
An endodontic file (10) for a motorized rotary handpiece includes a coupler element (12) for coupling to the handpiece a central longitudinal flexible core (13) including a central flexible cable supported by the coupler element and a helical wire (15) surrounding the core and extending toward a tip of the core opposite the handle end. The flexible core includes a first plurality of inner strands (17) twisted together in a first direction and surrounded by a second plurality of outer strands (18) twisted in an opposite direction. The tip of the core is chamfered and unbonded and protrudes beyond the helical wire at the tip whereby in use reversing a direction of rotation of the endodontic file after the tip of the core reaches the apex of the root canal unwinds the outer strands which operate as a brush during removal of the endodontic file from the root canal.

No. of Pages : 28 No. of Claims : 40

(12) PATENT APPLICATION PUBLICATION
(19) INDIA
(22) Date of filing of Application :05/11/2013
(21) Application No.9525/DELNP/2013 A
(43) Publication Date : 19/12/2014

(54) Title of the invention : METHOD FOR THE GENERATION OF A MONOCLONAL PLANT CELL LINE

(51) International classification :A01H4/00
(31) Priority Document No :NA
(32) Priority Date :NA
(33) Name of priority country :NA
(86) International Application No :PCT/EP2011/002785
Filing Date :07/06/2011
(87) International Publication No :WO 2012/167803
(61) Patent of Addition to Application Number :NA
Filing Date :NA
(62) Divisional to Application Number :NA
Filing Date :NA

(71)**Name of Applicant :**
1)FRAUNHOFER GESELLSCHAFT ZUR F–RDERUNG DER ANGEWANDTEN FORSCHUNG E.V.
Address of Applicant :Hansastrasse 27c 80686 M¼nchen Germany
(72)**Name of Inventor :**
1)KIRCHHOFF Janina
2)SCHILLBERG Stefan
3)SCHIERMEYER Andreas
4)SCHINKEL Helga
5)FISCHER Rainer

(57) Abstract :
The invention provides a method for the generation of a monoclonal plant cell line from a heterologous population of plant cells comprising the following steps: (a) provision of a heterologous population of plant cells; (b) preparation of protoplasts from said heterologous population of plant cells; (c) separation of single protoplasts by subjecting the preparation of protoplasts to flow cytometric sorting; (d) regeneration of a separated single transformed protoplast until the formation of a microcolony by co cultivation in the presence of feeder cell material; (e) removal of the microcolony from the feeder cell material and cultivation of the microcolony until the formation of a monoclonal plant cell line.

No. of Pages : 33 No. of Claims : 7

(12) PATENT APPLICATION PUBLICATION
(19) INDIA
(22) Date of filing of Application :05/11/2013
(21) Application No.9526/DELNP/2013 A
(43) Publication Date : 19/12/2014

(54) Title of the invention : TARGETING LANDMARKS OF ORTHOPAEDIC DEVICES

(51) International classification :A61B17/56,A61B17/80,A61B17/86
(31) Priority Document No :61/483228
(32) Priority Date :06/05/2011
(33) Name of priority country :U.S.A.
(86) International Application No :PCT/US2012/036320
Filing Date :03/05/2012
(87) International Publication No :WO 2012/154496
(61) Patent of Addition to Application Number :NA
Filing Date :NA
(62) Divisional to Application Number :NA
Filing Date :NA

(71)**Name of Applicant :**
1)SMITH & NEPHEW INC.
Address of Applicant :1450 Brooks Road Memphis Tennessee 38116 U.S.A.
(72)**Name of Inventor :**
1)WILHELM Hoa La
2)RAINS James K.
3)HAMPTON Daniel
4)PETTEYS Timothy J.
5)GERLACH Darin S.

(57) Abstract :
A method for targeting a landmark of an orthopaedic implant comprises implanting the orthopaedic implant in a body. The orthopaedic implant having at least one landmark defining two or more locations for targeting and a first magnetic sensor located at a known distance from at least one of the two or more locations. The method includes comprises identifying one of the locations using a landmark identifier the landmark identifier having at least one of a second magnetic sensor and a magnetic field generator installing a transfixion element in the at least one landmark and identifying a second location using the landmark identifier.

No. of Pages : 52 No. of Claims : 63

(12) PATENT APPLICATION PUBLICATION
(19) INDIA
(22) Date of filing of Application :05/11/2013
(21) Application No.9527/DELNP/2013 A
(43) Publication Date : 19/12/2014

(54) Title of the invention : RECHARGEABLE ALKALINE METAL AND ALKALINE EARTH ELECTRODES HAVING CONTROLLED DENDRITIC GROWTH AND METHODS FOR MAKING AND USING THE SAME

(51) International classification :H01M2/18
(31) Priority Document No :61/486946
(32) Priority Date :17/05/2011
(33) Name of priority country :U.S.A.
(86) International Application No :PCT/US2012/038360
Filing Date :17/05/2012
(87) International Publication No :WO 2012/158924
(61) Patent of Addition to Application Number :NA
Filing Date :NA
(62) Divisional to Application Number :NA
Filing Date :NA

(71)**Name of Applicant :**
1)INDIANA RESEARCH AND TECHNOLOGY CORPORATION
Address of Applicant :351 West 10th Street Suite 210 Indianapolis IN 46202 U.S.A.
(72)**Name of Inventor :**
1)XIE Jian

(57) Abstract :
A device for extending the life of a battery including an electrode having a metal portion wherein the metal portion is selected from the group including lithium calcium magnesium sodium potassium and combinations thereof an electrolyte permeable membrane and a metal dendrite seeding material disposed between the electrode and the membrane. The electrode the membrane and the metal dendrite seeding material are positioned in an electrolyte matrix. At least one dendrite extends from the electrode toward the electrolyte permeable membrane combines with at least one dendrite extending from the dendrite seeding material.

No. of Pages : 34 No. of Claims : 33

(12) PATENT APPLICATION PUBLICATION
(19) INDIA
(22) Date of filing of Application :05/11/2013
(21) Application No.9528/DELNP/2013 A
(43) Publication Date : 19/12/2014

(54) Title of the invention : PRIMARY AND AUXILIARY ROCKER ARM ASSEMBLY FOR ENGINE VALVE ACTUATION

(51) International classification :F01L9/02
(31) Priority Document No :61/490544
(32) Priority Date :26/05/2011
(33) Name of priority country :U.S.A.
(86) International Application No :PCT/US2012/039599
Filing Date :25/05/2012
(87) International Publication No :WO 2012/162616
(61) Patent of Addition to Application Number :NA
Filing Date :NA
(62) Divisional to Application Number :NA
Filing Date :NA

(71)**Name of Applicant :**
1)JACOBS VEHICLE SYSTEMS INC.
Address of Applicant :22 East Dudley Town Road Bloomfield CT 06002 U.S.A.
(72)**Name of Inventor :**
1)JANAK Robb
2)RUGGIERO Brian
3)MEISTRICK Zdenek S.

(57) Abstract :
Systems and methods for actuating engine valves are disclosed. The systems may include primary and auxiliary rocker arms disposed adjacent to each other on a rocker arm shaft. The primary rocker arm may actuate engine valves for primary valve actuation motions such as main exhaust events in response to an input from a first valve train element such as a cam. The auxiliary rocker arm may receive one or more auxiliary valve actuation motions such as for engine braking exhaust gas recirculation and/or brake gas recirculation events from a second valve train element to actuate one of the engine valves. Master and slave pistons may be provided in the primary rocker arm. The master piston may be actuated by the auxiliary rocker arm.

No. of Pages : 23 No. of Claims : 23

(12) PATENT APPLICATION PUBLICATION
(19) INDIA
(22) Date of filing of Application :07/11/2013
(21) Application No.9600/DELNP/2013 A
(43) Publication Date : 19/12/2014

(54) Title of the invention : METHOD FOR CREATING CLONE FILE AND FILE SYSTEM ADOPTING THE SAME

(51) International classification :G06F3/06,G06F17/30
(31) Priority Document No :NA
(32) Priority Date :NA
(33) Name of priority country :NA
(86) International Application No :PCT/JP2011/005192
Filing Date :14/09/2011
(87) International Publication No :WO 2013/038447
(61) Patent of Addition to Application Number :NA
Filing Date :NA
(62) Divisional to Application Number :NA
Filing Date :NA

(71)**Name of Applicant :**
1)HITACHI LTD.
Address of Applicant :6 6 Marunouchi 1 chome Chiyoda ku Tokyo 1008280 Japan
(72)**Name of Inventor :**
1)KAMEI Hitoshi
2)NAKAMURA Takaki

(57) Abstract :
In the prior art clone creating technique of a file a management table of a snapshot and the file was created when creating the clone file so that a considerable amount of creation time for creating the clone file and storage capacity was required. In order to solve the problems of the prior art the present invention provides a system wherein if a request to create a clone of a file is received a differential file is created while inhibiting update of the file and update data is written to the differential file. Further when a first update request is received to the differential file after creating the differential file a management table is created. According to the invention a large amount of clone files can be created speedily.

No. of Pages : 60 No. of Claims : 12

(12) PATENT APPLICATION PUBLICATION
(19) INDIA
(22) Date of filing of Application :07/11/2013
(21) Application No.9589/DELNP/2013 A
(43) Publication Date : 19/12/2014

(54) Title of the invention : PROCESS FOR THICKENING A DRILLING MUD WASTE MATERIALS AND A MODIFIED DRILLING MUD WASTE MATERIAL

(51) International classification :C09K8/035
(31) Priority Document No :61/486456
(32) Priority Date :16/05/2011
(33) Name of priority country :U.S.A.
(86) International Application No :PCT/US2012/037755
Filing Date :14/05/2012
(87) International Publication No :WO 2012/158605
(61) Patent of Addition to Application Number :NA
Filing Date :NA
(62) Divisional to Application Number :NA
Filing Date :NA

(71)**Name of Applicant :**
1)HENWIL CORPORATION
Address of Applicant :899 Third Street Newell Pennsylvania 15466 U.S.A.
(72)**Name of Inventor :**
1)IMAN Craig D.
2)GEORGE James T.
3)HERCEG James S.
4)VAUGHAN Craig W.
5)GROFF Todd W.

(57) Abstract :
A process for thickening an oil based and/or water based drilling mud waste materials comprising: (1) mixing a drilling mud waste materials having greater than zero percent by weight free liquid with an effective amount of one or more anionic copolymers to form a treated drilling mud waste materials; (2) providing an effective amount of time period sufficient to thicken the treated drilling mud waste materials for eliminating the free liquid; and (3) optionally transporting and disposing of the thickened treated drilling mud waste materials in a landfill. The anionic copolymer is either: (a) a crosslinked anionic copolymer derived from an anionic monomer a nonionic monomer and a cross linking monomer; or (b) a non cross linked linear chain copolymer of an anionic polymer arid a nonionic polymer; or (c) a blend of (a) and (b). A modified drilling mud waste materials having zero percent by weight free liquid as generated from the aforementioned process is disclosed.

No. of Pages : 48 No. of Claims : 29

(12) PATENT APPLICATION PUBLICATION
(19) INDIA
(22) Date of filing of Application :07/11/2013
(21) Application No.9590/DELNP/2013 A
(43) Publication Date : 19/12/2014

(54) Title of the invention : A COUPLING FOR AN OSTOMY APPLIANCE

(51) International classification :A61F5/448
(31) Priority Document No :PA 2011 70353
(32) Priority Date :01/07/2011
(33) Name of priority country :Denmark
(86) International Application No :PCT/DK2012/050230
Filing Date :29/06/2012
(87) International Publication No :WO 2013/004235
(61) Patent of Addition to Application Number :NA
Filing Date :NA
(62) Divisional to Application Number :NA
Filing Date :NA

(71)**Name of Applicant :**
1)COLOPLAST A/S
Address of Applicant :Holtedam 1 DK 3050 Humlebaek Denmark
(72)**Name of Inventor :**
1)Becker Kim
2)Matthison Hansen Kaspar

(57) Abstract :
A coupling for an ostomy bag is provided. The coupling comprises a substantially non extendable string functioning as locking ring in the coupling. The string is twisted by use of a tab when it is moved from an un locked position to a locked position. A coupling as described can be made flexible and thereby more comfortable for the user.

No. of Pages : 22 No. of Claims : 17

(12) PATENT APPLICATION PUBLICATION
(19) INDIA
(22) Date of filing of Application :07/11/2013
(21) Application No.9592/DELNP/2013 A
(43) Publication Date : 19/12/2014

(54) Title of the invention : AN OSTOMY APPLIANCE

(51) International classification :A61F5/443
(31) Priority Document No :PA 2011 70347
(32) Priority Date :30/06/2011
(33) Name of priority country :Denmark
(86) International Application No :PCT/DK2012/050217
Filing Date :28/06/2012
(87) International Publication No :WO 2013/000472
(61) Patent of Addition to Application Number :NA
Filing Date :NA
(62) Divisional to Application Number :NA
Filing Date :NA

(71)**Name of Applicant :**
1)COLOPLAST A/S
Address of Applicant :Holtedam 1 DK 3050 Humlebaek Denmark
(72)**Name of Inventor :**
1)KLEIN Charlotte
2)STROEBECH Esben

(57) Abstract :
An ostomy appliance for attachment to a stoma comprising an adhesive wafer (100) a first part of which is covered by a first release liner (104) and a second part of which is covered by a second release liner (106). At least one of the two release liners defines an attached part which in an initial state is attached to the skin facing adhesive layer (102) and a foldable part which in a folded state is folded such that it covers at least a part of the attached part and such that it is not in direct contact with the skin facing adhesive layer. A cutting guide (120) is printed onto the at least a part of the attached part and the foldable part.

No. of Pages : 16 No. of Claims : 11

(12) PATENT APPLICATION PUBLICATION
(19) INDIA
(22) Date of filing of Application :07/11/2013

(21) Application No.9593/DELNP/2013 A
(43) Publication Date : 19/12/2014

(54) Title of the invention : ABSORBENT ARTICLE

(51) International classification :A61F13/15,A61F13/534,A61F13/539
(31) Priority Document No :2011118620
(32) Priority Date :27/05/2011
(33) Name of priority country :Japan
(86) International Application No :PCT/JP2012/063467
Filing Date :25/05/2012
(87) International Publication No :WO 2012/165327
(61) Patent of Addition to Application Number :NA
Filing Date :NA
(62) Divisional to Application Number :NA
Filing Date :NA

(71)**Name of Applicant :**
1)Kao Corporation
Address of Applicant :14 10 Nihonbashi Kayaba cho 1 chome Chuo ku Tokyo 1038210 Japan
(72)**Name of Inventor :**
1)ISHIKAWA Takehiro
2)KATOH Takahiro
3)NAGAHARA Shinsuke
4)YASUDA Michio
5)TACHIKAWA Hiromi

(57) Abstract :
I n an absorbent article (1), an absorbent (4) i s configured o f an absorbent core (40) containing an absorbent material. The absorbent core (40) □ has high-weight parts (41) containing a relatively large amount o f the absorb ent material and low-weight parts (42) containing a relatively small amount o f the absorbent material and the high-weight parts (41) and the low-weight parts □(42) are alternately formed both in the lengthwise direction (X) and in the widthwise direction´Y o f the absorbent article (1). I n the absorbent article (1), a groove (7) i s formed b y concaving a □front face sheet (2) together with the absorbent core (40). The groove (7) i s at least formed o f a row o f two high- □- weight parts (41) and (41) and one low-weight part (42), said low-weight part (42) being positioned between said two high-weight parts (41) and (41), that are aligned in the lengthwise direction (or i n the widthwise direction (Y). A bottom wall part (71) constituting the groove (7) i s positioned closer t o the non -sKin -contact face (4b) side than the thickness direction center (Tc) o f the absorbent core (40).

No. of Pages : 130 No. of Claims : 20

(12) PATENT APPLICATION PUBLICATION
(19) INDIA
(22) Date of filing of Application :06/11/2013
(21) Application No.9565/DELNP/2013 A
(43) Publication Date : 19/12/2014

(54) Title of the invention : PROCESS FOR PRODUCING WATER ABSORBING POLYMERS WITH HIGH ABSORPTION RATE

(51) International classification :C08F220/06,C08F2/44,A61L15/00
(31) Priority Document No :10 2011 007 723.5
(32) Priority Date :20/04/2011
(33) Name of priority country :Germany
(86) International Application No :PCT/EP2012/056019
Filing Date :03/04/2012
(87) International Publication No :WO 2012/143235
(61) Patent of Addition to Application Number :NA
Filing Date :NA
(62) Divisional to Application Number :NA
Filing Date :NA

(71)**Name of Applicant :**
1)EVONIK DEGUSSA GMBH
Address of Applicant :Rellinghauser Strasse 1 11 45128 Essen Germany
(72)**Name of Inventor :**
1)WATTEBLED Laurent
2)LOICK Christoph
3)HARREN Jrg
4)LEININGER Stefan

(57) Abstract :
The invention relates to a process for producing a water absorbing polymer composition comprising the process steps of (i) mixing (a1) 0.1 to 99.999% by weight preferably 20 to 98.99% by weight and more preferably 30 to 98.95% by weight of polymerized ethylenically unsaturated monomers containing acid groups or salts thereof or polymerized ethylenically unsaturated monomers including a protonated or quaternized nitrogen or mixtures thereof particular preference being given to mixtures including at least ethylenically unsaturated monomers containing acid groups preferably acrylic acid (a2) 0 to 70% by weight preferably 1 to 60% by weight and more preferably 1 to 40% by weight of polymerized ethylenically unsaturated monomers copolymerizable with (a1) (a3) 0.001 to 10% by weight preferably 0.01 to 7% by weight and more preferably 0.05 to 5% by weight of one or more crosslinkers (a4) 0 to 30% by weight preferably 1 to 20% by weight and more preferably 5 to 10% by weight of water soluble polymers and (a5) 0 to 20% by weight preferably 0.01 to 7% by weight and more preferably 0.05 to 5% by weight of one or more assistants where the sum of their weights (a1) to (a5) is 100% by weight (ii) free radical polymerization with crosslinking to form a water insoluble aqueous untreated hydrogel polymer (iii) comminuting and drying the hydrogel polymer (iv) optionally grinding and sieving the water absorbing polymer (v) surface postcrosslinking the ground hydrogel polymer and (vi) drying and finishing the water absorbing polymer wherein blowing agents having a particle size of 100 µm to 900 µm are added to the aqueous monomer solution prior to the addition of the initiator and the start of the free radical polymerization.

No. of Pages : 36 No. of Claims : 16

(12) PATENT APPLICATION PUBLICATION
(19) INDIA
(22) Date of filing of Application :06/11/2013
(21) Application No.9567/DELNP/2013 A
(43) Publication Date : 19/12/2014

(54) Title of the invention : A VARIABLE WIND TURBINE HAVING A POWER DISSIPATING UNIT; A METHOD OF OPERATING A POWER DISSIPATING UNIT IN A WIND TURBINE

(51) International classification :H02P9/00,H02P9/10,F03D9/00
(31) Priority Document No :61/479853
(32) Priority Date :28/04/2011
(33) Name of priority country :U.S.A.
(86) International Application No :PCT/DK2012/050131
Filing Date :19/04/2012
(87) International Publication No :WO 2012/146250
(61) Patent of Addition to Application Number :NA
Filing Date :NA
(62) Divisional to Application Number :NA
Filing Date :NA

(71)**Name of Applicant :**
1)VESTAS WIND SYSTEMS A/S
Address of Applicant :Hedeager 44 DK 8200 …rhus N Denmark
(72)**Name of Inventor :**
1)GUPTA Amit Kumar
2)ANDERSEN Gert Karmisholt
3)FONN Swee Yee
4)LI Bing

(57) Abstract :
A variable speed wind turbine is provided. The variable speed wind turbine comprises a generator a power converter for converting at least a portion of electrical power generated by the generator the power converter comprising a generator side converter a grid side converter and a DC (direct current) link therebetween a power dissipating unit operatively coupled to the DC link and a controller. The controller is adapted to receive a request to reduce power output from the wind turbine determine a feed forward power signal based on a reference generator power and a desired turbine power and operate the power dissipating unit based on the feed forward power signal.

No. of Pages : 24 No. of Claims : 14

(12) PATENT APPLICATION PUBLICATION
(19) INDIA
(22) Date of filing of Application :06/11/2013
(21) Application No.9568/DELNP/2013 A
(43) Publication Date : 19/12/2014

(54) Title of the invention : EVAPORATOR SYSTEM

(51) International classification :B01D1/06,B01D1/28,F28D7/16
(31) Priority Document No :2006776
(32) Priority Date :13/05/2011
(33) Name of priority country :Netherlands
(86) International Application No :PCT/NL2012/050331
Filing Date :14/05/2012
(87) International Publication No :WO 2012/158027
(61) Patent of Addition to Application Number :NA
Filing Date :NA
(62) Divisional to Application Number :NA
Filing Date :NA

(71)**Name of Applicant :**
1)Friesland Brands B.V.
Address of Applicant :Stationsplein 4 NL 3818 LE Amersfoort Netherlands
(72)**Name of Inventor :**
1)VAN GILS Gerardus Adrianus Josephus
2)SCHR–DER GUIJT Caroliene Marjan
3)AKKERMAN Jan Coen
4)FOX Martijn Bastiaan

(57) Abstract :
Evaporator system of the mechanical vapor recompression type which has a housing (1) and evaporator tubes (2) positioned parallel to each other. A product inlet (3) in fluid communication with a distribution element (4) is connected to the evaporator tubes (2) and a secondary channel (5) is formed between the inside surface of the housing (1) and the external surfaces of the evaporator tubes (2). A vapor liquid separator (6) is positioned at a bottom side of the evaporator tubes (2) and the secondary channel (5). A compressor (7) is in fluid communication with a vapor outlet of the vapor liquid separator (6) and a second transport tube (8) is connected to an inlet (9) of the secondary channel (5). Each evaporator tube (2) of the plurality of evaporator tubes has an inner diameter (de) of at least 50 mm.

No. of Pages : 21 No. of Claims : 17

(12) PATENT APPLICATION PUBLICATION
(19) INDIA
(22) Date of filing of Application :06/11/2013
(21) Application No.9580/DELNP/2013 A
(43) Publication Date : 19/12/2014

(54) Title of the invention : GEAR PUMP AND METHOD FOR OPERATING A GEAR PUMP

(51) International classification :F04C2/08,F04C2/10,F02D41/38
(31) Priority Document No :10 2011 079 671.1
(32) Priority Date :22/07/2011
(33) Name of priority country :Germany
(86) International Application No :PCT/EP2012/061126
Filing Date :12/06/2012
(87) International Publication No :WO 2013/013879
(61) Patent of Addition to Application Number :NA
Filing Date :NA
(62) Divisional to Application Number :NA
Filing Date :NA

(71)**Name of Applicant :**
1)ROBERT BOSCH GMBH
Address of Applicant :Postfach 30 02 20 70442 Stuttgart Germany
(72)**Name of Inventor :**
1)FUCHS Alexander

(57) Abstract :
A gear pump for delivering a fluid, which gear pump has a rotatably mounted toothed wheel with external toothing and has a toothed ring with internal toothing, wherein a 5 multiplicity of delivery chambers are formed by the meshing of teeth, and having a suctionside inflow duct and a pressure-side outflow duct, wherein between the inflow duct and the outflow duct there is formed a sealing region, wherein an orifice is formed in the sealing region on the side on which the delivery chambers decrease in size during the rotation of the toothed wheel and of the toothed ring. A method for delivering a fluid in a high-pressure 10 injection system, wherein a first hydraulic path is provided which leads from a pressure-side outflow duct of the gear pump via a high-pressure pump to a high-pressure accumulator, and a second hydraulic path is provided which leads from a pressure-side opening of the gear pump via a suction valve and a pump cylinder of the high-pressure pump to the high-pressure accumulator, wherein, in a standard operating mode in which the gear pump performs the 15 function of predelivery of the fluid to the high-pressure pump, the fluid is supplied to the high-pressure accumulator via the first hydraulic path and the second hydraulic path, and wherein, in a starting mode for the rapid build-up of a high pressure in the high-pressure accumulator, the fluid is supplied to the high-pressure accumulator only via the second hydraulic path, wherein at the same time the fluid quantity emerging from the gear pump via 20 the first hydraulic path is supplied back to the inflow duct of the gear pump via a bypass path.

No. of Pages : 15 No. of Claims : 10

(12) PATENT APPLICATION PUBLICATION
(19) INDIA
(22) Date of filing of Application :06/11/2013

(21) Application No.9582/DELNP/2013 A
(43) Publication Date : 19/12/2014

(54) Title of the invention : A PACKAGE

(51) International classification :A61F2/00
(31) Priority Document No :1107932.4
(32) Priority Date :12/05/2011
(33) Name of priority country :U.K.
(86) International Application No :PCT/GB2012/050851
Filing Date :18/04/2012
(87) International Publication No :WO 2012/153092
(61) Patent of Addition to Application Number :NA
Filing Date :NA
(62) Divisional to Application Number :NA
Filing Date :NA

(71)**Name of Applicant :**
1)FINSBURY (DEVELOPMENT) LTD
Address of Applicant :13 Mole Business Park Randalls Road Leatherhead Surrey KT22 7BA U.K.
(72)**Name of Inventor :**
1)NEAL Kevin
2)STACEY Thomas

(57) Abstract :
A package and method of packaging a surgical implant or surgical instrument are described. The package comprises a container and a holder having a recess arranged to receive a portion of a surgical implant or instrument or a component coupled to the surgical implant or instrument. The holder is arranged to be at least partially received within the container. The holder has a first configuration in which the mouth of the recess is arranged to partially surround a portion of an implant or instrument or a component coupled to the surgical implant or instrument such that the recess grips the implant or instrument in position spaced apart from the container when the holder is at least partially received in the container. The holder also has a second configuration in which the mouth of the recess opens to release the implant or instrument.

No. of Pages : 18 No. of Claims : 19

(12) PATENT APPLICATION PUBLICATION
(19) INDIA
(22) Date of filing of Application :06/11/2013
(21) Application No.9583/DELNP/2013 A
(43) Publication Date : 19/12/2014

(54) Title of the invention : PARTICULATE SUPERABSORBENT POLYMER COMPOSITION HAVING IMPROVED PERFORMANCE PROPERTIES

(51) International classification	:C08F220/06,A61L15/60,C08J3/24
(31) Priority Document No	:13/091844
(32) Priority Date	:21/04/2011
(33) Name of priority country	:U.S.A.
(86) International Application No	:PCT/EP2012/055472
Filing Date	:28/03/2012
(87) International Publication No	:WO 2012/143215
(61) Patent of Addition to Application Number	:NA
Filing Date	:NA
(62) Divisional to Application Number	:NA
Filing Date	:NA

(71)**Name of Applicant :**
1)EVONIK CORPORATION
Address of Applicant :299 Jefferson Road Parsippany NJ 07054 U.S.A.
(72)**Name of Inventor :**
1)SHI Yaru
2)TIAN Gonglu
3)JOY Mark C
4)BLAKE Geoffrey W.
5)MESSNER Bernfried Andreas
6)SMITH Scott

(57) Abstract :
The present invention relates to a particulate superabsorbent polymer composition which absorbs water aqueous liquids and blood and a process to make the superabsorbent polymers wherein a superabsorbent polymer is surface treated with a neutralized multivalent metal salt solution having a pH value similar as that of human skin. The present invention also relates to particulate superabsorbent polymer composition having high Gel Bed Permeability and high Absorbency Under Load.

No. of Pages : 79 No. of Claims : 34

(12) PATENT APPLICATION PUBLICATION
(19) INDIA
(22) Date of filing of Application :07/11/2013
(21) Application No.9584/DELNP/2013 A
(43) Publication Date : 19/12/2014

(54) Title of the invention : SURGICAL IMPLANT

(51) International classification :A61L27/30,A61L27/42,A61L27/56
(31) Priority Document No :61/492985
(32) Priority Date :03/06/2011
(33) Name of priority country :U.S.A.
(86) International Application No :PCT/US2012/040437
Filing Date :01/06/2012
(87) International Publication No :WO 2012/167063
(61) Patent of Addition to Application Number :NA
Filing Date :NA
(62) Divisional to Application Number :NA
Filing Date :NA

(71)**Name of Applicant :**
1)SYNTHES GMBH
Address of Applicant :Eimattstrasse 3 CH 4436 Oberdorf Switzerland
(72)**Name of Inventor :**
1)VOISARD Cyril
2)GEDET Philippe
3)BOUDUBAN Nicolas

(57) Abstract :
A surgical implant comprising: a substrate having an exterior surface and a plurality of layers disposed over the substrate exterior surface. The substrate comprises a polymeric material and the plurality of layers comprises: an activated substrate surface layer; a valve metal layer; and a porous valve metal oxide layer wherein the valve metal layer is disposed between the activated substrate layer and the porous valve metal oxide layer. The disclosure provides for a method for producing a polymeric surgical implant. The exterior substrate surface is treated by one or more processes comprising: plasma activation; electron beam irradiation; ultraviolet light; and low energy Ar+ ion beam irradiation; producing an activated substrate surface layer. A plurality of layers is applied over the activated substrate surface layer. The surface is converted by a spark anodization process in an alkaline bath containing Ca and P ions into a layer of porous valve metal oxide.

No. of Pages : 34 No. of Claims : 40

(12) PATENT APPLICATION PUBLICATION
(19) INDIA
(22) Date of filing of Application :07/11/2013
(21) Application No.9601/DELNP/2013 A
(43) Publication Date : 19/12/2014

(54) Title of the invention : A GUARDRAIL AND METHOD FOR ASSEMBLING IT

(51) International classification :E04F11/18,E04G21/32,F16B7/18
(31) Priority Document No :PA 2011 00277
(32) Priority Date :08/04/2011
(33) Name of priority country :Denmark
(86) International Application No :PCT/DK2012/050119
Filing Date :10/04/2012
(87) International Publication No :WO 2012/136227
(61) Patent of Addition to Application Number :NA
Filing Date :NA
(62) Divisional to Application Number :NA
Filing Date :NA

(71)**Name of Applicant :**
1)LASSE RAMSKOV HOLDING APS
Address of Applicant :Nordholmen 10 DK 2650 Hvidovre Denmark
(72)**Name of Inventor :**
1)RAMSKOV Lasse Fomsgaard

(57) Abstract :
A guardrail serves for protecting persons being present on open floors (31) of buildings or scaffolds against accidentally falling out of the opening of such floors (31). The guardrail comprises a number of constructional elements (1) and of connectors for assembling said constructional elements to a coherent guardrail. The connectors comprise at least one first connector (2) which has a longitudinal shape and is formed with at least one longitudinal extending slot (13) and at least one second connector (19 20) consisting of a first connector part (20) to be connected to the at least one constructional element (1) and a second connector part (19) to connect the first connector part (20) to the at least one first connector (2) while engaging the at least one longitudinal extending slot (13) of this. The guardrail of the invention has a stable and at the same time cheap and simple structure which quickly and easily can be assembled to a coherent guardrail and be disassembled again. The guardrail can moreover be fitted too to the width and height required of the guardrail for a specific opening of a given open floor.

No. of Pages : 31 No. of Claims : 22

(12) PATENT APPLICATION PUBLICATION
(19) INDIA
(22) Date of filing of Application :07/11/2013
(21) Application No.9602/DELNP/2013 A
(43) Publication Date : 19/12/2014

(54) Title of the invention : A METHOD OF OPERATING A WELDING POWER SUPPLY AND A WELDING POWER SUPPLY

(51) International classification :B23K9/10
(31) Priority Document No :NA
(32) Priority Date :NA
(33) Name of priority country :NA
(86) International Application No :PCT/EP2011/057149
Filing Date :04/05/2011
(87) International Publication No :WO 2012/149969
(61) Patent of Addition to Application Number :NA
Filing Date :NA
(62) Divisional to Application Number :NA
Filing Date :NA

(71)**Name of Applicant :**
1)ESAB AB
Address of Applicant :P.O. Box 8004 S 402 77 Gteborg Sweden
(72)**Name of Inventor :**
1)…BERG Per

(57) Abstract :
A method of operating a welding power supply (20) during a welding process in which an electric arc (95) between a consumable electrode (94) and a work piece (102) is generated while feeding the consumable electrode (94) and moving the arc (95) in relation to the work piece (102) along a welding track (103) wherein a transition between a DC power output of the welding power supply and an AC power output of the welding power supply or vice versa is made without interruption of the welding process.

No. of Pages : 22 No. of Claims : 10

(12) PATENT APPLICATION PUBLICATION
(19) INDIA
(22) Date of filing of Application :07/11/2013
(21) Application No.9603/DELNP/2013 A
(43) Publication Date : 19/12/2014

(54) Title of the invention : FUSED HETEROCYCLIC COMPOUNDS AS SODIUM CHANNEL MODULATORS

(51) International classification :C07D237/32,C07D253/08,C07D265/22
(31) Priority Document No :61/484500
(32) Priority Date :10/05/2011
(33) Name of priority country :U.S.A.
(86) International Application No :PCT/US2012/036976
Filing Date :08/05/2012
(87) International Publication No :WO 2012/154760
(61) Patent of Addition to Application Number :NA
Filing Date :NA
(62) Divisional to Application Number :NA
Filing Date :NA

(71)**Name of Applicant :**
1)GILEAD SCIENCES INC.
Address of Applicant :333 Lakeside Drive Foster City California 94404 U.S.A.
(72)**Name of Inventor :**
1)CORKEY Britton Kenneth
2)ELZEIN Elfatih
3)JIANG Robert H.
4)KALLA Rao V.
5)KOBAYASHI Tetsuya
6)KOLTUN Dmitry
7)LI Xiaofen
8)MARTINEZ Ruben
9)NOTTE Gregory
10)PARKHILL Eric Q.
11)PERRY Thao
12)ZABLOCKI Jeff
13)VENKATARAMANI Chandrasekar
14)GRAUPE Michael
15)GUERRERO Juan

(57) Abstract :
The present disclosure relates to compounds that are sodium channel inhibitors and to their use in the treatment of various disease states, including cardiovascular diseases and diabetes. In particular embodiments, the structure of the compounds is given by Formula (I), wherein Q, R1, X1, X2, Y and R2 are as described herein, to methods for the preparation and use of the com- Q pounds and to pharmaceutical compositions containing the same.

No. of Pages : 329 No. of Claims : 41

(12) PATENT APPLICATION PUBLICATION
(19) INDIA
(22) Date of filing of Application :07/11/2013
(21) Application No.9610/DELNP/2013 A
(43) Publication Date : 19/12/2014

(54) Title of the invention : ELECTRIC VEHICLE AND METHOD FOR CONTROLLING SAME

(51) International classification :B60L3/00,B60K6/22,B60K6/445
(31) Priority Document No :NA
(32) Priority Date :NA
(33) Name of priority country :NA
(86) International Application No :PCT/JP2011/059522
Filing Date :18/04/2011
(87) International Publication No :WO 2012/143989
(61) Patent of Addition to Application Number :NA
Filing Date :NA
(62) Divisional to Application Number :NA
Filing Date :NA

(71)**Name of Applicant :**
1)TOYOTA JIDOSHA KABUSHIKI KAISHA
Address of Applicant :1 Toyota cho Toyota shi Aichi 4718571 Japan
(72)**Name of Inventor :**
1)HIRASAWA Takahiko
2)KAITA Keiji

(57) Abstract :
An electrically powered vehicle includes an electric motor for generating a vehicle driving force in accordance with an accelerator operation amount by a driver, 5 and a notification unit for notifying the driver of information about accelerator operation by the driver in a mode which makes the driver sense the accelerator operation amount more easily in the case where a wheel is in contact with an obstacle than in the case where the wheel is not in contact with the obstacle.

No. of Pages : 34 No. of Claims : 7

(12) PATENT APPLICATION PUBLICATION
(19) INDIA
(22) Date of filing of Application :07/11/2013
(21) Application No.9611/DELNP/2013 A
(43) Publication Date : 19/12/2014

(54) Title of the invention : A URINAL DEODORISER CARTRIDGE

(51) International classification :E03D9/02,E03D13/00
(31) Priority Document No :2011901331
(32) Priority Date :08/04/2011
(33) Name of priority country :Australia
(86) International Application No :PCT/AU2012/000353
Filing Date :05/04/2012
(87) International Publication No :WO 2012/135910
(61) Patent of Addition to Application Number :NA
Filing Date :NA
(62) Divisional to Application Number :NA
Filing Date :NA

(71)**Name of Applicant :**
1)CALFARME AUSTRALIA PTY LTD
Address of Applicant :Unit 42 55 Norman Street Peakhurst NSW 2210 Australia
(72)**Name of Inventor :**
1)NEO Boon Lye Paul

(57) Abstract :
A urinal deodoriser cartridge assembly (100) is provided. The assembly comprises an outer body (200) sized for placement in a urinal and an insert (300) configured for insertion into and removable retention within the outer body (200) and to retain a deodorising block (1 10). The assembly (100) is adapted to permit contact between urinal liquids and the deodorising block (1 10) by a base of the insert (300) being positionable to contact a surface of the urinal. A device configured for placement in a urinal and for retaining a urinal deodoriser cartridge (100) assembly is also provided.

No. of Pages : 33 No. of Claims : 21

(12) PATENT APPLICATION PUBLICATION
(19) INDIA
(22) Date of filing of Application :06/11/2013
(21) Application No.9554/DELNP/2013 A
(43) Publication Date : 19/12/2014

(54) Title of the invention : UNDERGROUND REACTOR SYSTEM

(51) International classification :C12M1/00,C12P5/00,B01J3/02
(31) Priority Document No :61/481918
(32) Priority Date :03/05/2011
(33) Name of priority country :U.S.A.
(86) International Application No :PCT/US2012/036400
Filing Date :03/05/2012
(87) International Publication No :WO 2012/151447
(61) Patent of Addition to Application Number :NA
Filing Date :NA
(62) Divisional to Application Number :NA
Filing Date :NA

(71)**Name of Applicant :**
1)THE ADMINISTRATORS OF THE TULANE EDUCATIONAL FUND
Address of Applicant :Gibson Hall 6823 St. Charles Avenue Suite 300 New Orleans LA 70118 U.S.A.
(72)**Name of Inventor :**
1)IGLESIAS Brandon

(57) Abstract :
An underground reactor for creating hydrocarbons and chemicals from organic material preferably includes a heat recovery device. Some embodiments of the present invention include at least one tube that injects biomass underground and at least one second tube that collects reacted biomass on the surface. Further tubes are also disclosed for the ability to control temperature and pressure and collect minerals and carbon dioxide. Methods for utilizing the reactor are additionally provided. Further embodiments include methods of using the reactor such as for example methods of creating fuel from algae and methods of using the minerals and carbon dioxide as food for an algae farm that will be used as biomass for the reactor.

No. of Pages : 69 No. of Claims : 67

(12) PATENT APPLICATION PUBLICATION
(19) INDIA
(22) Date of filing of Application :06/11/2013
(21) Application No.9555/DELNP/2013 A
(43) Publication Date : 19/12/2014

(54) Title of the invention : HEAD RESTRAINT WHICH IS MOVABLE IN THE X DIRECTION

(51) International classification :B60N2/48
(31) Priority Document No :10 2011 102 702.9
(32) Priority Date :20/05/2011
(33) Name of priority country :Germany
(86) International Application No :PCT/EP2012/002113
Filing Date :16/05/2012
(87) International Publication No :WO 2012/159720
(61) Patent of Addition to Application Number :NA
Filing Date :NA
(62) Divisional to Application Number :NA
Filing Date :NA

(71)**Name of Applicant :**
1)JOHNSON CONTROLS GMBH
Address of Applicant :Industriestrasse 20 30 51399 Burscheid Germany
(72)**Name of Inventor :**
1)FROTZ Thomas

(57) Abstract :
The invention relates to a head restraint (1) having a housing (4) which is at least partially movable relative to a supporting rod (2), by means of which the head restraint is arranged on the backrest of a vehicle seat, toward and away from the head of the occupant of the seat, wherein a slide (5) is provided on the housing, with positive connecting and/or nonpositive connecting means (5.1) along the longitudinal extent thereof, which can be brought into engagement with a respective locking means (3), and as a result can secure the housing (4) in the respective position thereof as desired.

No. of Pages : 21 No. of Claims : 10

(12) PATENT APPLICATION PUBLICATION
(19) INDIA
(22) Date of filing of Application :06/11/2013
(21) Application No.9556/DELNP/2013 A
(43) Publication Date : 19/12/2014

(54) Title of the invention : DEVICE FOR PRODUCING GRAIN ORIENTED MAGNETIC STEEL SHEET AND METHOD FOR PRODUCING GRAIN ORIENTED MAGNETIC STEEL SHEET

(51) International classification :B23K26/08,C21D8/12
(31) Priority Document No :NA
(32) Priority Date :NA
(33) Name of priority country :NA
(86) International Application No :PCT/JP2011/062609
Filing Date :01/06/2011
(87) International Publication No :WO 2012/164702
(61) Patent of Addition to Application Number :NA
Filing Date :NA
(62) Divisional to Application Number :NA
Filing Date :NA

(71)**Name of Applicant :**
1)NIPPON STEEL & SUMITOMO METAL CORPORATION
Address of Applicant :6 1 Marunouchi 2 chome Chiyoda ku Tokyo 1008071 Japan
(72)**Name of Inventor :**
1)SAKAI Tatsuhiko

(57) Abstract :
This device for producing a gram-oriented magnetic steel sheet that produces a grain-oriented magnetic steel sheet that has been subjected to magnetic domain control by means of radiating a laser beam has: laser beam radiating devices (20) of which a plurality have been provided in the direction of conveyance of a steel sheet (1); and a widthwise motion mechanism □1 □that moves the laser beam radiating devices (20) in the widthwise direction of the steel sheet (1). The widthwise motion mechanism (15) can move the laser beam radiating devices (20) across the entire width of the steel sheet (3 1).

No. of Pages : 30 No. of Claims : 3

(12) PATENT APPLICATION PUBLICATION
(19) INDIA
(22) Date of filing of Application :06/11/2013
(21) Application No.9557/DELNP/2013 A
(43) Publication Date : 19/12/2014

(54) Title of the invention : METHOD FOR CONTROLLING WEEDS IN A FIELD OF COTTON PLANTS

(51) International classification :A01H5/00,C12N15/82
(31) Priority Document No :61/479533
(32) Priority Date :27/04/2011
(33) Name of priority country :U.S.A.
(86) International Application No :PCT/US2012/034503
Filing Date :20/04/2012
(87) International Publication No :WO 2012/148818
(61) Patent of Addition to Application Number :NA
Filing Date :NA
(62) Divisional to Application Number :NA
Filing Date :NA

(71)**Name of Applicant :**
1)DOW AGROSCIENCES LLC
Address of Applicant :9330 Zionsville Road Indianapolis Indiana 46268 U.S.A.
(72)**Name of Inventor :**
1)RICHBURG John S.
2)WRIGHT Terry R.
3)BRAXTON Leon B.
4)ROBINSON Andrew E.

(57) Abstract :
The present invention relates to a method of controlling undesirable vegetation in a field containing an auxin herbicide resistant cotton crop by applying to the location where control is desired a mixture of an effective amount of 2 4 DB and an effective amount of glufosinate.

No. of Pages : 17 No. of Claims : 16

(12) PATENT APPLICATION PUBLICATION
(19) INDIA
(22) Date of filing of Application :06/11/2013

(21) Application No.9558/DELNP/2013 A
(43) Publication Date : 19/12/2014

(54) Title of the invention : USE OF BETHANECHOL FOR TREATMENT OF XEROSTOMIA

(51) International classification	:A61K31/27,A61K9/00,A61P43/00
(31) Priority Document No	:1107533.0
(32) Priority Date	:06/05/2011
(33) Name of priority country	:U.K.
(86) International Application No	:PCT/GB2012/050976
Filing Date	:04/05/2012
(87) International Publication No	:WO 2012/153110
(61) Patent of Addition to Application Number	:NA
Filing Date	:NA
(62) Divisional to Application Number	:NA
Filing Date	:NA

(71)**Name of Applicant :**
1)ACACIA PHARMA LIMITED
Address of Applicant :Harston Mill Harston Cambridgeshire CB22 7GG U.K.
(72)**Name of Inventor :**
1)WALKER Ian
2)FRODSHAM Michael

(57) Abstract :
A formulation for topical administration comprises bethanechol and a penetration enhancer. The formulation is preferably used by being maintained in the buccal cavity for a period of time prior to being swallowed.

No. of Pages : 16 No. of Claims : 12

(12) PATENT APPLICATION PUBLICATION
(19) INDIA
(22) Date of filing of Application :06/11/2013
(21) Application No.9559/DELNP/2013 A
(43) Publication Date : 19/12/2014

(54) Title of the invention : PRESSURE CANISTERS FOR AUTOMATED DELIVERY OF COATING COMPOSITIONS

(51) International classification :B05B9/04,B05B15/02,B05B12/14
(31) Priority Document No :13/104043
(32) Priority Date :10/05/2011
(33) Name of priority country :U.S.A.
(86) International Application No :PCT/US2012/037086
Filing Date :09/05/2012
(87) International Publication No :WO 2012/154826
(61) Patent of Addition to Application Number :NA
Filing Date :NA
(62) Divisional to Application Number :NA
Filing Date :NA

(71)**Name of Applicant :**
1)PPG INDUSTRIES OHIO INC.
Address of Applicant :3800 West 143rd Street Cleveland Ohio 44111 U.S.A.
(72)**Name of Inventor :**
1)ROBERTSON Walter James
2)CAMPBELL Melanie Sue
3)OSTER Jr. John Ritnell
4)SZUL Jr. Joseph S.
5)FOUKES Richard

(57) Abstract :
Systems for delivering coating compositions are disclosed. The system may include a support base for supporting a container of a coating composition and a pressure canister movable in relation to the support base from an open position to a closed position in which the pressure canister surrounds the coating composition container and forms a seal with the support base. The sys - tern may include a pressure canister that is movable from a delivery position in which the canister is pressurized to a cleaning posi - tion in which the canister may be cleaned by a cleaning fixture. The pressure canisters are useful in automated systems for delivering various types of coating formulations.

No. of Pages : 24 No. of Claims : 31

(12) PATENT APPLICATION PUBLICATION
(19) INDIA
(22) Date of filing of Application :29/10/2013
(21) Application No.9348/DELNP/2013 A
(43) Publication Date : 19/12/2014

(54) Title of the invention : TIME TEMPERATURE INDICATOR SYSTEM

(51) International classification :G01N31/22,G01K3/04
(31) Priority Document No :20110590
(32) Priority Date :15/04/2011
(33) Name of priority country :Norway
(86) International Application No :PCT/NO2012/050060
Filing Date :10/04/2012
(87) International Publication No :WO 2012/141594
(61) Patent of Addition to Application Number :NA
Filing Date :NA
(62) Divisional to Application Number :NA
Filing Date :NA

(71)**Name of Applicant :**
1)KEEP IT TECHNOLOGIES AS
Address of Applicant :Str¸msveien 323 A N 1081 Oslo Norway
(72)**Name of Inventor :**
1)RˆHR …smund K.
2)ANDERSEN Peder Oscar
3)SALBU Brit
4)GUDJONSSON Eggert F.
5)PETTERSEN Marit Nandrup
6)AASLAND Christian Salbu

(57) Abstract :
The present invention relates to a time temperature indicator system useful for monitoring the time and temperature exposure of foods nutraceuticals pharmaceuticals cosmetics chemicals and other products. The system provides improved time temperature sensitivity and a response which better reflects that of the reactions leading to quality loss of the monitored product. Further the invention also relates to a combination comprising said time temperature indicator system and a product storage container. A method for producing said time temperature indicator system is also part of the present invention.

No. of Pages : 37 No. of Claims : 15

(12) PATENT APPLICATION PUBLICATION
(19) INDIA
(22) Date of filing of Application :08/11/2013
(21) Application No.9626/DELNP/2013 A
(43) Publication Date : 19/12/2014

(54) Title of the invention : DETACHABLE CUTTING HEAD FOR THE APPARATUS FOR FEEDING SETS OF FILTER SEGMENTS DRIVE APPARATUS FOR DETACHABLE CUTTING HEAD AND METHOD OF REPLACEMENT OF DETACHABLE CUTTING HEAD

(51) International classification :A24D3/02,B26D3/16,B26D7/26
(31) Priority Document No :P.394994
(32) Priority Date :23/05/2011
(33) Name of priority country :Poland
(86) International Application No :PCT/PL2012/050013
Filing Date :22/05/2012
(87) International Publication No :WO 2012/161605
(61) Patent of Addition to Application Number :NA
Filing Date :NA
(62) Divisional to Application Number :NA
Filing Date :NA

(71)**Name of Applicant :**
1)INTERNATIONAL TOBACCO MACHINERY POLAND SP. Z O.O.
Address of Applicant :Warsztatowa 19A PL 26 600 Radom Poland
(72)**Name of Inventor :**
1)CIESLIKOWSKI Bartosz
2)DOMINIAK Ryszard
3)BOLESLAWSKI Andrzej
4)SIKORA Leszek

(57) Abstract :
The object of the application is a detachable cutting head for an apparatus for feeding filter segments provided with a drum conveyor having flutes for crosswise movement of filter rods provided with circular knives situated in knife units mounted in the housing of the head characterized in that it comprises a housing of the head (8) provided with a reference surface (23) for positioning in the apparatus for feeding filter segments; seatings (20 21) for positioning the knife units (10) and lead out channels (25) knife units (10) with circular knives (6) whereas the positioning seatings (20 21) are situated so that the circular knives (6) do not overlap. Furthermore the object of the application is a drive apparatus of a cutting head and a method of coupling a cutting head.

No. of Pages : 14 No. of Claims : 9

(12) PATENT APPLICATION PUBLICATION
(19) INDIA
(22) Date of filing of Application :08/11/2013
(21) Application No.9627/DELNP/2013 A
(43) Publication Date : 19/12/2014

(54) Title of the invention : UNIT FOR CONVEYING FILTER SEGMENTS

(51) International classification :A24D3/02
(31) Priority Document No :P.394995
(32) Priority Date :23/05/2011
(33) Name of priority country :Poland
(86) International Application No :PCT/PL2012/050012
Filing Date :22/05/2012
(87) International Publication No :WO 2012/161604
(61) Patent of Addition to Application Number :NA
Filing Date :NA
(62) Divisional to Application Number :NA
Filing Date :NA

(71)**Name of Applicant :**
1)INTERNATIONAL TOBACCO MACHINERY POLAND SP. Z O.O.
Address of Applicant :Warsztatowa 19A PL 26 600 Radom Poland
(72)**Name of Inventor :**
1)CIESLIKOWSKI Bartosz
2)DOMINIAK Ryszard
3)MAMERSKI Marcin
4)SIKORA Leszek

(57) Abstract :
The object of the invention is a unit for conveying filter segments (2) for the machines of tobacco industry comprising a chain conveyor(10) in a horizontal arrangement on which the lugs (21) are disposed the working ends(28) of which are deflected from the vertical. The unit comprises guides (23 33) of the filter segments(2) provided with an inclined channel (27) guiding the lug (21).

No. of Pages : 11 No. of Claims : 3

(12) PATENT APPLICATION PUBLICATION
(19) INDIA
(22) Date of filing of Application :08/11/2013
(21) Application No.9628/DELNP/2013 A
(43) Publication Date : 19/12/2014

(54) Title of the invention : FITTING SYSTEM FOR A VEHICLE SEAT

(51) International classification :B60N2/235
(31) Priority Document No :10 2011 106 285.1
(32) Priority Date :04/07/2011
(33) Name of priority country :Germany
(86) International Application No :PCT/EP2012/061450
Filing Date :15/06/2012
(87) International Publication No :WO 2013/004471
(61) Patent of Addition to Application Number :NA
Filing Date :NA
(62) Divisional to Application Number :NA
Filing Date :NA

(71)**Name of Applicant :**
1)KEIPER GMBH & CO. KG
Address of Applicant :Hertelsbrunnenring 2 67657 Kaiserslautern Germany
(72)**Name of Inventor :**
1)SCHLER Rolf
2)BOSSMANNS Bernd
3)ASSMANN Uwe

(57) Abstract :
overallIn a fitting system for a vehicle seat in particular a motor vehicle seat having at least one fitting (10) which has a first fitting part (11) and a second fitting part (12) which fitting parts can be locked to one another and can be rotated relative to one another about an axis (A) having a transmission rod (7) the rotation of which during an unlocking process unlocks the fitting (10) against the torque which follows a characteristic curve (M35) and is generated by a spring arrangement (35) and having a hand lever (5) for initiating the unlocking process the actuation of which rotates the transmission rod (7) a shaped spring (61) is active between a first component (63) and a second component (64) which move in particular rotate relative to one another during the unlocking process the torque which is generated by said shaped spring following a non linear characteristic curve (M) which together with the at least approximately linear characteristic curve (M) of the spring arrangement (35) produces an overall characteristic curve (M).

No. of Pages : 48 No. of Claims : 15

(12) PATENT APPLICATION PUBLICATION
(19) INDIA
(22) Date of filing of Application :06/11/2013
(21) Application No.9544/DELNP/2013 A
(43) Publication Date : 19/12/2014

(54) Title of the invention : SUPPRESSION OF DEWETTING OF POLYMER FILMS VIA INEXPENSIVE SOFT LITHOGRAPHY

(51) International classification :G03F7/00
(31) Priority Document No :61/482487
(32) Priority Date :04/05/2011
(33) Name of priority country :U.S.A.
(86) International Application No :PCT/US2012/036542
Filing Date :04/05/2012
(87) International Publication No :WO 2012/151497
(61) Patent of Addition to Application Number :NA
Filing Date :NA
(62) Divisional to Application Number :NA
Filing Date :NA

(71)**Name of Applicant :**
1)THE UNIVERSITY OF AKRON
Address of Applicant :302 E. Buchtel Common Akron Ohio 44325 U.S.A.
(72)**Name of Inventor :**
1)KARIM Alamgir
2)BANDYOPAHYAY Diya

(57) Abstract :
A method for producing a patterned polymer film on a substrate includes the steps of coating a substrate with a polymer film; placing a patterned mask onto the surface of the polymer film the patterned mask having at least one pattern section of dimensions less than the capillary wavelength of the polymer film; annealing the polymer film by either solvent annealing or temperature based annealing which involves raising the temperature of the polymer film above its glass transition temperature the step of annealing causing the polymer film to conform to the dimensions of the at least one pattern section of dimensions less than the capillary wavelength of the polymer film thereby forming a patterned polymer film; and removing the patterned mask from the patterned polymer film.

No. of Pages : 22 No. of Claims : 13

(12) PATENT APPLICATION PUBLICATION
(19) INDIA
(22) Date of filing of Application :06/11/2013
(21) Application No.9545/DELNP/2013 A
(43) Publication Date : 19/12/2014

(54) Title of the invention : HIGH PRESSURE FUEL PUMP DEVICE

(51) International classification :F02M59/44,F02M37/08,F02M59/26
(31) Priority Document No :2011108096
(32) Priority Date :13/05/2011
(33) Name of priority country :Japan
(86) International Application No :PCT/JP2012/062150
Filing Date :11/05/2012
(87) International Publication No :WO 2012/157564
(61) Patent of Addition to Application Number :NA
Filing Date :NA
(62) Divisional to Application Number :NA
Filing Date :NA

(71)**Name of Applicant :**
1)MIKUNI CORPORATION
Address of Applicant :13 11 Sotokanda 6 chome Chiyoda ku Tokyo 1010021 Japan
(72)**Name of Inventor :**
1)SATO Tomoya
2)MURAJI Tetsuo
3)HIRAYAMA Toshinori
4)KATO Hiroshi

(57) Abstract :
A high-pressure fuel pump device of the invention includes a plunger-type high-pressure pump unit (31) 5 configured to pressurize fuel as a plunger (43) thereof makes reciprocating motion, a diaphragm-type supply pump unit (33) configured to suck in fuel in a fuel tank (11) and supply the fuel to the high-pressure pump unit as a diaphragm (87) thereof oscillates in conjunction with the 10 reciprocating motion of the plunger, and a fuel return unit (34) provided in the supply pump unit and configured to return, to the fuel tank, surplus fuel that is not sucked into the high-pressure pump unit.

No. of Pages : 37 No. of Claims : 5

(12) PATENT APPLICATION PUBLICATION
(19) INDIA
(22) Date of filing of Application :06/11/2013
(21) Application No.9546/DELNP/2013 A
(43) Publication Date : 19/12/2014

(54) Title of the invention : NON ORIENTED ELECTROMAGNETIC STEEL SHEET

(51) International classification :C22C38/00,C22C38/14,C22C38/60
(31) Priority Document No :2012029884
(32) Priority Date :14/02/2012
(33) Name of priority country :Japan
(86) International Application No :PCT/JP2013/052555
Filing Date :05/02/2013
(87) International Publication No :WO 2013/121924
(61) Patent of Addition to Application Number :NA
Filing Date :NA
(62) Divisional to Application Number :NA
Filing Date :NA

(71)**Name of Applicant :**
1)NIPPON STEEL & SUMITOMO METAL CORPORATION
Address of Applicant :6 1 Marunouchi 2 chome Chiyoda ku Tokyo 1008071 Japan
(72)**Name of Inventor :**
1)MIYAZAKI Masafumi
2)YAMAMURA Hideaki
3)KAWAKAMI Kazuto

(57) Abstract :
A non-oriented electromagnetic steel sheet which is characterized by containing 0.01% by mass or less of C , 1.0-3.5% by mass 1 0 (inclusive) of Si, 0 . 1-3.0% by mass (inclusive) of 10 Al, 0.1-2.0% by mass (inclusive) of Mn, 0.1% by - 9 120 mass or less of P , 0.005% by mass or less of S , 8 0.001-0.01% by mass (inclusive) of Ti, 0.005% 100 - by mass or less of N , and more than 0.05% by D D mass but 0.2% by mass or less of Y , with the bal ance made up of iron and unavoidable impurities

No. of Pages : 28 No. of Claims : 2

(12) PATENT APPLICATION PUBLICATION
(19) INDIA
(22) Date of filing of Application :06/11/2013
(21) Application No.9547/DELNP/2013 A
(43) Publication Date : 19/12/2014

(54) Title of the invention : L PROLINE AND CITRIC ACID CO CRYSTALS OF (2S 3R 4R 5S 6R) 2 (3 ((5 (4 FLUOROPHENYL)THIOPHEN 2 YL) METHYL) 4 METHYLPHENYL) 6 (HYDROXYMETHYL)TETRAHYDRO 2H PYRAN 3 4 5 TRIOL

(51) International classification	:C07D409/10,A61K31/70,C07H7/04
(31) Priority Document No	:61/483887
(32) Priority Date	:09/05/2011
(33) Name of priority country	:U.S.A.
(86) International Application No	:PCT/US2012/037062
Filing Date	:09/05/2012
(87) International Publication No	:WO 2012/154812
(61) Patent of Addition to Application Number	:NA
Filing Date	:NA
(62) Divisional to Application Number	:NA
Filing Date	:NA

(71)**Name of Applicant :**
1)JANSSEN PHARMACEUTICA NV
Address of Applicant :Turnhoutseweg 30 B 2340 Beerse Belgium
(72)**Name of Inventor :**
1)NGUYEN Minh
2)COLLIER Edwin A.

(57) Abstract :
The present invention is directed to L proline and citric acid co crystals of (2S 3R 4R 5S 6R) 2 (3 ((5 (4 fluorophenyl)thiophen 2 yl)methyl) 4 methylphenyl) 6 (hydroxymethyl)tetrahydro 2H pyran 3 4 5 triol pharmaceutical compositions containing said co crystals and their use in the treatment glucose related disorders such as Type 2 diabetes mellitus and Syndrome X.

No. of Pages : 35 No. of Claims : 10

(12) PATENT APPLICATION PUBLICATION
(19) INDIA
(22) Date of filing of Application :06/11/2013
(21) Application No.9548/DELNP/2013 A
(43) Publication Date : 19/12/2014

(54) Title of the invention : POSITIONING MARKER

(51) International classification :A61B19/00
(31) Priority Document No :11504065
(32) Priority Date :09/05/2011
(33) Name of priority country :Sweden
(86) International Application No :PCT/SE2012/050484
Filing Date :08/05/2012
(87) International Publication No :WO 2012/154116
(61) Patent of Addition to Application Number :NA
Filing Date :NA
(62) Divisional to Application Number :NA
Filing Date :NA

(71)**Name of Applicant :**
1)N„SLUND Ingemar
Address of Applicant :Vassvgen 21 S 141 39 Huddinge Sweden
(72)**Name of Inventor :**
1)N„SLUND Ingemar

(57) Abstract :
The present invention relates to a positioning marker intended to be inserted in tissue. The marker is an elongated object with a longitudinal axis A and with a diameter perpendicular to said longitudinal axis wherein the diameter is at the most 1 2 mm. The marker further has a predetermined total length L. The marker comprises a plurality of first segments 1 and a plurality of second segments 2 wherein the first and the second segments are arranged alternately after each others. The marker comprises a first material with a density of at least 10 g/cm and this material constitute at least 90 % by volume of the marker and a second material that is magnetic and that constitute at the most 10 % by volume of the marker.

No. of Pages : 11 No. of Claims : 8

(12) PATENT APPLICATION PUBLICATION
(19) INDIA
(22) Date of filing of Application :06/11/2013
(21) Application No.9569/DELNP/2013 A
(43) Publication Date : 19/12/2014

(54) Title of the invention : HYBRID COMPRESSOR SYSTEM AND METHODS

(51) International classification :F25B41/04,F25B31/00,F25B1/10
(31) Priority Document No :61/491515
(32) Priority Date :31/05/2011
(33) Name of priority country :U.S.A.
(86) International Application No :PCT/US2012/037872
Filing Date :15/05/2012
(87) International Publication No :WO 2012/166338
(61) Patent of Addition to Application Number :NA
Filing Date :NA
(62) Divisional to Application Number :NA
Filing Date :NA

(71)**Name of Applicant :**
1)CARRIER CORPORATION
Address of Applicant :One Carrier Place P.O. Box 4015 Farmington Connecticut 06034 U.S.A.
(72)**Name of Inventor :**
1)SISHTLA Vishnu M.

(57) Abstract :
An apparatus (20) has a centrifugal compressor (24) a positive displacement compressor (26) a first heat exchanger (32) and a second heat exchanger (36). A plurality of valves (70 72 74) are positioned to provide operation in at least two modes. In a first mode refrigerant is compressed in the positive displacement compressor and the centrifugal compressor at least partially in parallel. In a second mode refrigerant is compressed in the positive displacement compressor and the centrifugal compressor is offline. In a third mode refrigerant is compressed in the positive displacement compressor and the centrifugal compressor at least partially in series.

No. of Pages : 20 No. of Claims : 16

(12) PATENT APPLICATION PUBLICATION
(19) INDIA
(22) Date of filing of Application :06/11/2013
(21) Application No.9570/DELNP/2013 A
(43) Publication Date : 19/12/2014

(54) Title of the invention : INFORMATION PROCESSING SYSTEM DATA MANAGEMENT METHOD INFORMATION PROCESSING DEVICE AND CONTROL METHOD AND CONTROL PROGRAM THEREFOR

(51) International classification :G06F12/00,G06F9/44
(31) Priority Document No :2011116367
(32) Priority Date :24/05/2011
(33) Name of priority country :Japan
(86) International Application No :PCT/JP2012/003346
Filing Date :22/05/2012
(87) International Publication No :WO 2012/160813
(61) Patent of Addition to Application Number :NA
Filing Date :NA
(62) Divisional to Application Number :NA
Filing Date :NA

(71)**Name of Applicant :**
1)NEC CORPORATION
Address of Applicant :7 1 Shiba 5 chome Minato ku Tokyo 1088001 Japan
(72)**Name of Inventor :**
1)TAKAYANAGI Nao
2)MATSUDA Naohisa

(57) Abstract :
This miormation processing device i s characterized b y being provided with: a file input unit for inputting data model files that represent data models in a first language for describing data models; a first generation unit for generating data base configuration files described i n a second lan guage for describing databases from the data model files; and a second generation unit for generating application interfaces described i n a third language for describing application interfaces fixim the data model files.

No. of Pages : 63 No. of Claims : 13

(12) PATENT APPLICATION PUBLICATION
(19) INDIA
(22) Date of filing of Application :08/11/2013
(21) Application No.9633/DELNP/2013 A
(43) Publication Date : 19/12/2014

(54) Title of the invention : SYSTEM AND METHOD FOR IMPROVED HEALTHCARE DELIVERY

(51) International classification :A61B5/00
(31) Priority Document No :61/482683
(32) Priority Date :05/05/2011
(33) Name of priority country :U.S.A.
(86) International Application No :PCT/US2012/035968
Filing Date :01/05/2012
(87) International Publication No :WO 2012/151193
(61) Patent of Addition to Application Number :NA
Filing Date :NA
(62) Divisional to Application Number :NA
Filing Date :NA

(71)**Name of Applicant :**
1)MASON Roger Alan
Address of Applicant :426 E. Burnett Street Dumas AR 71639 U.S.A.
(72)**Name of Inventor :**
1)MASON Roger Alan

(57) Abstract :
Embodiments of the invention are directed toward a interactive system and method for improved health care delivery operated over a network in conjunction with a user device. The user device is connected over the network to an identification module which may be operable to identify a patient and associate that patient with pre established criteria. A screening module allows a user to enter data into the user device which relates to the patient s pre established criteria while a monitoring module determines whether the patient has complied with the criteria. An output module may transmit information relating to the patient s compliance to the same or another user device. The invention may also include a database for storing information transmitted by the output module an instant communication interface and an incentive generation engine for randomly selected or specifically targeted users.

No. of Pages : 37 No. of Claims : 20

(12) PATENT APPLICATION PUBLICATION
(19) INDIA
(22) Date of filing of Application :08/11/2013
(21) Application No.9634/DELNP/2013 A
(43) Publication Date : 19/12/2014

(54) Title of the invention : CLIP ON TARGET DESIGNATION SENSOR TO NIGHT VISION GOGGLES

(51) International classification :F41G1/35,G02B23/12
(31) Priority Document No :13/156696
(32) Priority Date :09/06/2011
(33) Name of priority country :U.S.A.
(86) International Application No :PCT/US2012/039825
Filing Date :29/05/2012
(87) International Publication No :WO 2012/170229
(61) Patent of Addition to Application Number :NA
Filing Date :NA
(62) Divisional to Application Number :NA
Filing Date :NA

(71)**Name of Applicant :**
1)EXELIS INC.
Address of Applicant :1650 Tysons Boulevard Suite 1700 Mclean VA 22102 U.S.A.
(72)**Name of Inventor :**
1)THOMAS Nils I.
2)THORSEN Daniel M.
3)HINES Kevin P.

(57) Abstract :
A target engagement system includes a night vision goggle system operating within a predetermined wavelength band and a laser module projecting light onto a target where the light operates at a wavelength that is outside of the predetermined wavelength band. Also included is a receive system for receiving the light reflected from the target and converting the light into a wavelength within the predetermined wavelength band. In this manner the receive system provides the converted light to the night vision goggle system and the night vision goggle system amplifies the converted light for viewing by a user. The receive system includes a clip on device for removably attaching the receive system between the target and the night vision goggle system. The receive system includes an up converting phosphor layer for up converting the received light into a wavelength detectable by the night vision goggle system.

No. of Pages : 16 No. of Claims : 23

(12) PATENT APPLICATION PUBLICATION
(19) INDIA
(22) Date of filing of Application :29/10/2013
(21) Application No.9302/DELNP/2013 A
(43) Publication Date : 19/12/2014

(54) Title of the invention : A PROCESS FOR EXTRACTION OF PEPTIDES AND ITS APPLICATION IN LIQUID PHASE PEPTIDE SYNTHESIS

(51) International classification :C07K1/14,C07K1/02
(31) Priority Document No :11170094.4
(32) Priority Date :16/06/2011
(33) Name of priority country :EPO
(86) International Application No :PCT/EP2012/061257
Filing Date :14/06/2012
(87) International Publication No :WO 2012/171984
(61) Patent of Addition to Application Number :NA
Filing Date :NA
(62) Divisional to Application Number :NA
Filing Date :NA

(71)**Name of Applicant :**
1)LONZA LTD
Address of Applicant :Lonzastrasse CH 3930 Visp Switzerland
2)LONZA BRAINE S.A.
(72)**Name of Inventor :**
1)MONNAIE Didier
2)FORNI Luciano
3)GIRAUD Mathieu

(57) Abstract :
The present invention relates to a process for extraction of a peptide from a reaction mixture resulting from a peptide coupling reaction, the reaction mixture containing the peptide and a polar aprotic solvent selected from the group consisting of A/,A/-dimethylformamide, A/,A/-dimethylacetamide and A/-methyl-2-pyrrolidone, whereby the process comprises a step a) and a step b):step a) comprises the addition of a component a l), a component a2) and a component a3), whereby component al) is an or - ganic solvent 1, the organic solvent 1 is selected from the group consisting of methyltetrahydrofuran and toluene, component a2) is water, and component a3) is an organic solvent 2, the organic solvent 2 is selected from the group consisting of ethylacetate, isopro - pylacetate, acetonitrile, tetrahydrofuran and n-heptane to the reaction mixture, so that a biphasic system with an organic layer and an aqueous layer is obtained; step b) comprises the subsequent separation of the organic layer containing the peptide from the aqueous layer. The extraction step is preferably used in a process for preparation of a peptide in liquid phase.

No. of Pages : 83 No. of Claims : 16

(12) PATENT APPLICATION PUBLICATION
(19) INDIA
(22) Date of filing of Application :29/10/2013
(21) Application No.9303/DELNP/2013 A
(43) Publication Date : 19/12/2014

(54) Title of the invention : A PROCESS TO SEPARATE PHOSGENE AND HYDROGEN CHLORIDE FROM A FLUID STREAM COMPRISING PHOSGENE AND HYDROGEN CHLORIDE

(51) International classification :C01B7/07
(31) Priority Document No :11178124.1
(32) Priority Date :19/08/2011
(33) Name of priority country :EPO
(86) International Application No :PCT/EP2012/061395
Filing Date :15/06/2012
(87) International Publication No :WO 2013/026591
(61) Patent of Addition to Application Number :NA
Filing Date :NA
(62) Divisional to Application Number :NA
Filing Date :NA

(71)**Name of Applicant :**
1)HUNTSMAN INTERNATIONAL LLC
Address of Applicant :500 Huntsman Way Salt Lake City UT 84108 U.S.A.
(72)**Name of Inventor :**
1)MOUAZER Rabah
2)SCHEFFER Ramon

(57) Abstract :
A process according to the invention is a process to separate an initial fluid stream comprising phosgene and hydrogen chloride in at least a first and a second fluid stream said first fluid stream being a hydrogen chloride enriched and phosgene depleted gaseous stream said second fluid stream being a hydrogen chloride depleted and phosgene enriched stream. The separation is performed by feeding said initial fluid stream to a membrane separation unit said membrane separation unit separating said initial fluid stream in a first and a second fluid stream.

No. of Pages : 38 No. of Claims : 15

(12) PATENT APPLICATION PUBLICATION
(19) INDIA
(22) Date of filing of Application :29/10/2013
(21) Application No.9304/DELNP/2013 A
(43) Publication Date : 19/12/2014

(54) Title of the invention : METHOD FOR PRODUCING RUBBER MIXTURES

(51) International classification :B60C1/00,C08K3/06,C08K3/36
(31) Priority Document No :11164320.1
(32) Priority Date :29/04/2011
(33) Name of priority country :EPO
(86) International Application No :PCT/EP2012/057859
Filing Date :27/04/2012
(87) International Publication No :WO 2012/146759
(61) Patent of Addition to Application Number :NA
Filing Date :NA
(62) Divisional to Application Number :NA
Filing Date :NA

(71)**Name of Applicant :**
1)LANXESS DEUTSCHLAND GMBH
Address of Applicant :Kennedyplatz 1 50569 Kln Germany
(72)**Name of Inventor :**
1)WIEDEMEIER Melanie
2)WEIDENHAUPT Hermann Josef
3)UNTERBERG Heinz
4)FELDHUES Ulrich

(57) Abstract :
The present invention relates to a process for producing rubber mixtures in a mixing process with, for example, a plurality of mixing stages, where these can optionally be divided into a plurality of sub-steps, comprising the mixing of the following components: 10 - one or more rubbers, one or more hydroxylated oxidic fillers, one or more sulphur-containing organosilicon and/or one or more hydroxypolysulphidic compounds, one or more anti-reversion agents selected from 1,6-bis(N,N-dibenzyl- 15 thiocarbamoyldithio)hexane (CAS No.: 151900-44-6), l,3-bis((3-methyl-2,5-dioxopyrrol-lyl) methyl)benzene (CAS No.: 119462-56-5) and hexamethylene 1,6-bis(thiosulphate), disodium salt, dihydrate (CAS No.: 5719-73-3), individually and mixtures thereof, where these are incorporated into the mixture in the first mixing stage, one or more vulcanization additives, 20 - one or more rubber additives.

No. of Pages : 20 No. of Claims : 9

(12) PATENT APPLICATION PUBLICATION
(19) INDIA
(22) Date of filing of Application :29/10/2013
(21) Application No.9305/DELNP/2013 A
(43) Publication Date : 19/12/2014

(54) Title of the invention : RUBBER MIXTURES CONTAINING SILICIC ACID AND SULFUR CONTAINING ADDITIVES

(51) International classification :B60C1/00,C08K5/36,C08K5/54
(31) Priority Document No :11164319.3
(32) Priority Date :29/04/2011
(33) Name of priority country :EPO
(86) International Application No :PCT/EP2012/057854
Filing Date :27/04/2012
(87) International Publication No :WO 2012/146755
(61) Patent of Addition to Application Number :NA
Filing Date :NA
(62) Divisional to Application Number :NA
Filing Date :NA

(71)**Name of Applicant :**
1)LANXESS DEUTSCHLAND GMBH
Address of Applicant :Kennedyplatz 1 50569 Kln Germany
(72)**Name of Inventor :**
1)WIEDEMEIER Melanie
2)WEIDENHAUPT Hermann Josef
3)FELDHUES Ulrich
4)MOLL Irene

(57) Abstract :
The present invention relates to silica-containing rubber mixture produced from at least one rubber, from a sulphur-containing alkoxysilane, from a crosslinking agent, from a filler, and optionally from further rubber auxiliaries, where the said mixture comprises from 0.1 to 15 parts by weight, based on 100 parts by weight of rubber used, of a silicon-free polysulphide additive of the formula (1) in which x is 0, l,2, 3 or 4, A is a moiety and B is a moiety in which R1 to R4 are identical or different and are hydrogen, C1-C6-alkyl, C5-C6-cycloalkyl, C6-10-aryl or a group -CH2-OR5, -CH2-CH2-OR5, -NHR5, -COR5, -COOR5,- CH2COOR5, where R5 = hydrogen, C1-C6-alkyl, C5-C6-cycloalkyl, C6-C10-aryl or C1-C6-acyl, and R6 to R7 are identical or different and are hydrogen C1-C6-alkyl, C,-C6-cycloalkyl, C6-C10-aryl or a group -CH2-OR5-, CH2-CH2-OR5,- NHR5, -COR5, -COORS, -CH2COOR5, with R5 = hydrogen, C,- C6-alkyl,C5-C6-cycloalkyl, C6-C10-aryl or C1-C6-acyl and y, z are mutually independently 0, 1 or 2, or A and B are mutually independently one of the moieties in which R1 and R2 are identical or different and are hydrogen, C1-C6-alkyl, C5-C6-cycloalkyl, C6-C10-aryl or a group -CH2-OR5, -CH2-CH2-OR5, -NHR5, -COR5-,COOR5-, CH2COOR5, where R5 = hydrogen, Cl-C6-alkyl, C5-C6-cycloalkyl, C6-C10-aryl or-C6-acyl.

No. of Pages : 28 No. of Claims : 25

(12) PATENT APPLICATION PUBLICATION
(19) INDIA
(22) Date of filing of Application :07/11/2013
(21) Application No.9604/DELNP/2013 A
(43) Publication Date : 19/12/2014

(54) Title of the invention : NUCLEAR REACTOR WITH DEVICE FOR INJECTING NANOPARTICLES IN THE EVENT OF AN ACCIDENT

(51) International classification :G21C15/18,G21C19/307,C09K5/10
(31) Priority Document No :11 54072
(32) Priority Date :11/05/2011
(33) Name of priority country:France
(86) International Application No :PCT/EP2012/058679
Filing Date :10/05/2012
(87) International Publication No :WO 2012/152883
(61) Patent of Addition to Application Number :NA
Filing Date :NA
(62) Divisional to Application Number :NA
Filing Date :NA

(71)**Name of Applicant :**
1)AREVA
Address of Applicant :1 Place Jean Millier Tour Areva F 92400 Courbevoie France
(72)**Name of Inventor :**
1)MOUSSAVI Mehdi
2)GUILLODO Micka«l
3)CARON CHARLES Marylise

(57) Abstract :
The nuclear reactor comprises: - a core with nuclear fuel assemblies; - a circuit for cooling the core in which circulates a fluid coolant; and - a device provided for injecting nanoparticles into the fluid coolant. The nanoparticles comprise first nanoparticles (82) of a first type having a first form factor of less than two, and second nanoparticles (84) of a second type different from the first type having a second form factor greater than two, the nanoparticles comprising between 10% and 90% by weight of the first nanoparticles (82) and between 90% and 10% by weight of the second nanoparticles (84).

No. of Pages : 16 No. of Claims : 10

(12) PATENT APPLICATION PUBLICATION
(19) INDIA
(22) Date of filing of Application :07/11/2013

(21) Application No.9605/DELNP/2013 A
(43) Publication Date : 19/12/2014

(54) Title of the invention : A HOT AIR ENGINE

(51) International classification :F02C1/10,F02C1/04,F01C1/08
(31) Priority Document No :2011901682
(32) Priority Date :06/05/2011
(33) Name of priority country :Australia
(86) International Application No :PCT/AU2012/000383
Filing Date :13/04/2012
(87) International Publication No :WO 2012/151606
(61) Patent of Addition to Application Number :NA
Filing Date :NA
(62) Divisional to Application Number :NA
Filing Date :NA

(71)**Name of Applicant :**
1)EVANS Glyn
Address of Applicant :18 Lennox Street Gordon NSW 2072 Australia
(72)**Name of Inventor :**
1)EVANS Glyn

(57) Abstract :
A hot air engine (10) includes a compressor (12) a heating chamber (14) a rotary displacement type working engine (16) and a drive means (22). The compressor (12) has an inlet (12a) and an outlet (12b). The heating chamber (14) has an inlet (14a) in fluid communication with the outlet (12b) of the compressor (12) and an outlet (14b). The working engine (16) has an inlet (16a) in fluid communication with the outlet (14b) of the heating chamber (14) and an output shaft (16a). The drive means (22) connects the working engine (16) to the compressor (12) such that operation of the working engine (16) causes operation of the compressor (12).

No. of Pages : 15 No. of Claims : 21

(12) PATENT APPLICATION PUBLICATION
(19) INDIA
(22) Date of filing of Application :07/11/2013
(21) Application No.9606/DELNP/2013 A
(43) Publication Date : 19/12/2014

(54) Title of the invention : FLEXIBLE MICROWAVE CATHETERS FOR NATURAL OR ARTIFICIAL LUMENS

(51) International classification :A61B18/18,A61M25/01
(31) Priority Document No :61/473564
(32) Priority Date :08/04/2011
(33) Name of priority country :U.S.A.
(86) International Application No :PCT/US2012/032815
Filing Date :09/04/2012
(87) International Publication No :WO 2013/106052
(61) Patent of Addition to Application Number :NA
Filing Date :NA
(62) Divisional to Application Number :NA
Filing Date :NA

(71)**Name of Applicant :**
1)COVIDIEN LP
Address of Applicant :15 Hampshire Street Mansfield Massachusetts 02048 U.S.A.
(72)**Name of Inventor :**
1)BRANNAN Joseph D.
2)LADTKOW Casey M.

(57) Abstract :
A method for implementing a microwave ablation waveguide that includes selecting a lumen adapted to convey a fluid and formed from living biological tissue introducing an elongate inner conductor into the lumen positioning at least a portion of the elongate inner conductor within the lumen such that a longitudinal axis of the elongate inner conductor is positioned substantially parallel to and at a desired distance from a longitudinal axis of the lumen and proximate an anatomical feature of interest and transferring microwave energy along the elongate inner conductor such that the lumen shields the inner conductor and allows a predetermined amount of microwave energy to propagate through the anatomical feature of interest.

No. of Pages : 158 No. of Claims : 20

(12) PATENT APPLICATION PUBLICATION
(19) INDIA
(22) Date of filing of Application :07/11/2013
(21) Application No.9608/DELNP/2013 A
(43) Publication Date : 19/12/2014

(54) Title of the invention : FLEXIBLE MICROWAVE CATHETERS FOR NATURAL OR ARTIFICIAL LUMENS

(51) International classification :A61B18/18,A61M25/01
(31) Priority Document No :61/473564
(32) Priority Date :08/04/2011
(33) Name of priority country :U.S.A.
(86) International Application No :PCT/US2012/032821
Filing Date :09/04/2012
(87) International Publication No :WO 2013/106054
(61) Patent of Addition to Application Number :NA
Filing Date :NA
(62) Divisional to Application Number :NA
Filing Date :NA

(71)**Name of Applicant :**
1)VIVANT MEDICAL INC.
Address of Applicant :5920 Longbow Drive Boulder CO 80301 U.S.A.
(72)**Name of Inventor :**
1)BRANNAN Joseph D.
2)ARTS Gene H.
3)DECARLO Arnold V.
4)LADTKOW Casey M.
5)REID William O. Jr.

(57) Abstract :
A flexible microwave catheter including a flexible coaxial cable having an inner conductor an inner dielectric coaxially disposed about the inner conductor and an outer conductor coaxially disposed about the inner dielectric at least one feedpoint defining a microwave radiating portion of the flexible coaxial cable a mesh structure having a collapsed configuration and an expanded configuration and disposed about the microwave radiating portion of the flexible coaxial cable wherein the mesh structure expands radially outward from the flexible microwave catheter thereby positioning the at least one feedpoint at the radial center of the mesh structure.

No. of Pages : 161 No. of Claims : 25

(12) PATENT APPLICATION PUBLICATION
(19) INDIA
(22) Date of filing of Application :07/11/2013
(21) Application No.9609/DELNP/2013 A
(43) Publication Date : 19/12/2014

(54) Title of the invention : FLEXIBLE MICROWAVE CATHETERS FOR NATURAL OR ARTIFICIAL LUMENS

(51) International classification :A61B18/18,A61M25/01
(31) Priority Document No :61/473564
(32) Priority Date :08/04/2011
(33) Name of priority country :U.S.A.
(86) International Application No :PCT/US2012/032820
Filing Date :09/04/2012
(87) International Publication No :WO 2013/106053
(61) Patent of Addition to Application Number :NA
Filing Date :NA
(62) Divisional to Application Number :NA
Filing Date :NA

(71)**Name of Applicant :**
1)VIVANT MEDICAL INC.
Address of Applicant :5920 Longbow Drive Boulder CO 80301 U.S.A.
(72)**Name of Inventor :**
1)BRANNAN Joseph D.
2)LADTKOW Casey M.

(57) Abstract :
A coupler for coupling a flexible coaxial cable a fluid cooling system and the outer sheath of a catheter the coupler including a fluid coupler body having a fluid inlet a fluid outlet a bypass bulb an outer sheath and a fluid sealing system housed in the fluid coupler body. The fluid sealing system includes a distal sealing diaphragm and a proximal sealing diaphragm configured to form a fluid tight seal with the fluid coupler body.

No. of Pages : 157 No. of Claims : 5

(12) PATENT APPLICATION PUBLICATION
(19) INDIA
(22) Date of filing of Application :08/11/2013
(21) Application No.9612/DELNP/2013 A
(43) Publication Date : 19/12/2014

(54) Title of the invention : SYSTEM AND METHOD FOR ROUTING ELECTRONIC CONTENT TO A RECIPIENT DEVICE

(51) International classification :H04W28/02,H04L12/54
(31) Priority Document No :2011033651
(32) Priority Date :11/05/2011
(33) Name of priority country :Singapore
(86) International Application No :PCT/SG2012/000162
Filing Date :09/05/2012
(87) International Publication No :WO 2012/154127
(61) Patent of Addition to Application Number :NA
Filing Date :NA
(62) Divisional to Application Number :NA
Filing Date :NA

(71)**Name of Applicant :**
1)SMART HUB PTE. LTD.
Address of Applicant :100 Beach Road #25 06 Shaw Towers Singapore 189702 Singapore
(72)**Name of Inventor :**
1)IBASCO Alex D.
2)JOSON Eduardo Ramon G.
3)DIAZ Manuel O. Jr.
4)YU William Emmanuel S.

(57) Abstract :
A system and method for routing electronic content to a recipient device comprising a plurality of network nodes each network node adapted to receive and forward electronic content and an activity profile server adapted to be in data communication with each network node the activity profile server adapted to monitor the activity level of each network node and inform each network node on the congestion level of an adjacent network node; wherein each network node is adapted on receiving the information on congestion level to store electronic content if the adjacent network node is congested and forward the electronic content to the adjacent network node if the adjacent network node is not congested is disclosed.

No. of Pages : 20 No. of Claims : 22

(12) PATENT APPLICATION PUBLICATION
(19) INDIA
(22) Date of filing of Application :08/11/2013
(21) Application No.9613/DELNP/2013 A
(43) Publication Date : 19/12/2014

(54) Title of the invention : SYSTEM AND METHOD FOR RECOGNIZING BROADCAST PROGRAM CONTENT

(51) International classification :H04H60/58
(31) Priority Document No :2011033289
(32) Priority Date :10/05/2011
(33) Name of priority country :Singapore
(86) International Application No :PCT/SG2012/000155
Filing Date :30/04/2012
(87) International Publication No :WO 2012/154125
(61) Patent of Addition to Application Number :NA
Filing Date :NA
(62) Divisional to Application Number :NA
Filing Date :NA

(71)**Name of Applicant :**
1)SMART HUB PTE. LTD.
Address of Applicant :100 Beach Road #25 06 Shaw Towers Singapore 189702 Singapore
(72)**Name of Inventor :**
1)IBASCO Alex D.
2)JOSON Eduardo Ramon G.
3)YU William Emmanuel S.
4)DIAZ Manuel O. (JR.)

(57) Abstract :
A broadcast program content recognition system comprising at least one receiver adapted to sample broadcast program content from a broadcast source; a content recognition engine for recognizing and storing the sampled broadcast program content; and a content database in data communication with the content recognition means; the content database adapted to return information relating to the broadcast program content upon receipt of a query from a client device is disclosed. The system is configured such that in event where the content recognition engine is unable to recognize the sample broadcast program content the content recognition engine splits the unrecognized sample into at least a first and a second sequential portions and appends the first portion to a previously recognized sample.

No. of Pages : 22 No. of Claims : 13

(12) PATENT APPLICATION PUBLICATION
(19) INDIA
(22) Date of filing of Application :08/11/2013
(21) Application No.9614/DELNP/2013 A
(43) Publication Date : 19/12/2014

(54) Title of the invention : METHOD FOR PROVIDING TARGET POINT CANDIDATES FOR SELECTING A TARGET POINT

(51) International classification :G01C15/00,G01C1/04,G01C11/36
(31) Priority Document No :11172756.6
(32) Priority Date :05/07/2011
(33) Name of priority country :EPO
(86) International Application No :PCT/EP2012/062936
Filing Date :03/07/2012
(87) International Publication No :WO 2013/004700
(61) Patent of Addition to Application Number :NA
Filing Date :NA
(62) Divisional to Application Number :NA
Filing Date :NA

(71)**Name of Applicant :**
1)HEXAGON TECHNOLOGY CENTER GMBH
Address of Applicant :Heinrich Wild Strasse CH 9435 Heerbrugg Switzerland
(72)**Name of Inventor :**
1)METZLER Bernhard
2)G„CHTER TOYA Stefan Martin Benjamin

(57) Abstract :
The invention relates to a method for providing target point candidates (22 23 26) forming a candidate set for selecting a target point from the candidate set by means of a geodetic measuring device wherein the measuring device has a sighting unit that defines a sighting direction and a camera oriented substantially in the sighting direction. The measuring device is coarsely oriented toward the target point and an image is recorded in the sighting direction. Furthermore a search process for certain target object candidates in the recorded image is performed by means of image processing wherein the search process is performed on the basis of predefined models and wherein at least one respective point representing the target object candidate is associated with each of the target object candidates as a target point candidate (22 23 26). In addition the target point candidates (22 23 26) are associated with a candidate set and respective weight values in particular probabilities are derived according to at least one value of a predetermined target point property of the target point candidates (22 23 26) and associated with the target point candidates (22 23 26). Further the target point candidates (22 23 26) from the candidate set are each provided together with respective information representing the weight value associated with the target point candidate.

No. of Pages : 47 No. of Claims : 14

(12) PATENT APPLICATION PUBLICATION
(19) INDIA
(22) Date of filing of Application :08/11/2013
(21) Application No.9617/DELNP/2013 A
(43) Publication Date : 19/12/2014

(54) Title of the invention : SYSTEM AND METHOD FOR DEVELOPING EVOLVING ONLINE PROFILES

(51) International classification :H04L12/58,H04L29/08
(31) Priority Document No :61/474322
(32) Priority Date :12/04/2011
(33) Name of priority country :U.S.A.
(86) International Application No :PCT/IB2012/051735
Filing Date :10/04/2012
(87) International Publication No :WO 2012/140562
(61) Patent of Addition to Application Number :NA
Filing Date :NA
(62) Divisional to Application Number :NA
Filing Date :NA

(71)**Name of Applicant :**
1)MALAVIYA Rakesh
Address of Applicant :G 67 Oriental Villa Sushant Lok Phase 3 Sector 57 Gurgaon 122002 Haryana India
(72)**Name of Inventor :**
1)BIST Anurag

(57) Abstract :
A system and a method for generating an emotional profile of the user and deriving inference from the analytics of generated emotional profile is provided. The method involves sharing media content or online event in a connected environment; capturing user s reaction to the said content or event; generating an emotional profile of the user to rate the media content or event; and sharing the emotional profile within the connected environment.

No. of Pages : 18 No. of Claims : 28

(12) PATENT APPLICATION PUBLICATION
(19) INDIA
(22) Date of filing of Application :06/11/2013
(21) Application No.9549/DELNP/2013 A
(43) Publication Date : 19/12/2014

(54) Title of the invention : NOVEL TICAGRELOR CO CRYSTAL

(51) International classification	:A61K31/519,C07D487/04,A61P7/02
(31) Priority Document No	:61/491949
(32) Priority Date	:01/06/2011
(33) Name of priority country	:U.S.A.
(86) International Application No	:PCT/GB2012/051222
Filing Date	:31/05/2012
(87) International Publication No	:WO 2012/164286
(61) Patent of Addition to Application Number	:NA
Filing Date	:NA
(62) Divisional to Application Number	:NA
Filing Date	:NA

(71)**Name of Applicant :**
1)ASTRAZENECA AB
Address of Applicant :SE 151 85 Sdertlje Sweden
(72)**Name of Inventor :**
1)COSGROVE Stephen David
2)JONAITIS David Thomas
3)SUTCH Jonathan Charles Derrick

(57) Abstract :
The present invention relates to a novel co crystal of the compound of formula (I): wherein the co former molecule is acetyl salicylic acid to processes for the preparation of the co crystal to pharmaceutical compositions containing the co crystal to the use of such a co crystal in the manufacture of a medicament for use in the prevention of arterial thrombotic complications in patients with coronary artery cerebrovascular or peripheral vascular disease and to methods of treating such diseases in the human or animal body by administering a therapeutically effective amount of a such a co crystal.

No. of Pages : 39 No. of Claims : 11

(12) PATENT APPLICATION PUBLICATION
(19) INDIA
(22) Date of filing of Application :08/11/2013
(21) Application No.9651/DELNP/2013 A
(43) Publication Date : 19/12/2014

(54) Title of the invention : METHODS FOR DIAGNOSING DEGENERATIVE JOINT DISEASE

(51) International classification :G01N33/564
(31) Priority Document No :61/518707
(32) Priority Date :10/05/2011
(33) Name of priority country :U.S.A.
(86) International Application No :PCT/US2012/036863
Filing Date :08/05/2012
(87) International Publication No :WO 2012/154705
(61) Patent of Addition to Application Number :NA
Filing Date :NA
(62) Divisional to Application Number :NA
Filing Date :NA

(71)**Name of Applicant :**
1)NESTEC S.A.
Address of Applicant :Avenue Nestle 55 CH 1800 Vevey Switzerland
(72)**Name of Inventor :**
1)HANNAH Steven Scott
2)SHERRILL Scott
3)LI Qinghong
4)SUN Peichuan

(57) Abstract :
The invention provides methods for diagnosing degenerative joint disease in an animal by collecting a saliva sample from an animal; determining the amount of at least one diagnostic agent selected from the group consisting of interferon gamma interferoninducible protein 10 interleukin 2 and total saliva protein in the saliva sample; comparing the amount of diagnostic agent found in the saliva sample to a corresponding amount of the same diagnostic agent found in a saliva sample from one or more comparable control animals that do not suffer from degenerative joint disease; and diagnosing that the animal is susceptible to or suffering from degenerative joint disease if the amount of diagnostic agent in the saliva sample from the animal is greater than the amount of same diagnostic agent found in the saliva sample from the one or more comparable control animals.

No. of Pages : 19 No. of Claims : 20

(12) PATENT APPLICATION PUBLICATION
(19) INDIA
(22) Date of filing of Application :08/11/2013
(21) Application No.9652/DELNP/2013 A
(43) Publication Date : 19/12/2014

(54) Title of the invention : METHODS AND COMPOSITIONS FOR PROMOTING LEAN BODY MASS GROWTH

(51) International classification :A01N37/18
(31) Priority Document No :61/518704
(32) Priority Date :10/05/2011
(33) Name of priority country :U.S.A.
(86) International Application No :PCT/US2012/036874
Filing Date :08/05/2012
(87) International Publication No :WO 2012/154711
(61) Patent of Addition to Application Number :NA
Filing Date :NA
(62) Divisional to Application Number :NA
Filing Date :NA

(71)**Name of Applicant :**
1)NESTEC S.A.
Address of Applicant :Avenue Nestle 55 CH 1800 Vevey Switzerland
(72)**Name of Inventor :**
1)TISSOT FAVRE Delphine
2)PAN Yuanlong
3)WELLS George

(57) Abstract :
The invention provides methods for promoting lean body mass growth in an animal. The methods comprise administering OEA to the animals preferably in amounts of from about 0.01 to about 1000 mg/kg/day.

No. of Pages : 20 No. of Claims : 24

(12) PATENT APPLICATION PUBLICATION
(19) INDIA
(22) Date of filing of Application :08/11/2013
(21) Application No.9654/DELNP/2013 A
(43) Publication Date : 19/12/2014

(54) Title of the invention : FLEXIBLE WINDING FOR AN ELECTRIC MOTOR AND METHOD FOR PRODUCING

(51) International classification :H02K3/04,H02K15/04
(31) Priority Document No :61/474141
(32) Priority Date :11/04/2011
(33) Name of priority country :U.S.A.
(86) International Application No :PCT/US2012/033130
Filing Date :11/04/2012
(87) International Publication No :WO 2012/142165
(61) Patent of Addition to Application Number :NA
Filing Date :NA
(62) Divisional to Application Number :NA
Filing Date :NA

(71)**Name of Applicant :**
1)ALLIED MOTION TECHNOLOGIES INC.
Address of Applicant :23 Inverness Way E Suite 150 Englewood CO 80112 5711 U.S.A.
(72)**Name of Inventor :**
1)DIELEMAN Krijn

(57) Abstract :
A flexible winding for a brushless rotating motor comprising a flexible substrate. A first winding circuit is disposed on a first side of the substrate. The flexible substrate is rolled into a substantially cylindrical shape such that the first winding circuit forms a winding suitable for an electric machine such as a rotary motor.

No. of Pages : 13 No. of Claims : 15

(12) PATENT APPLICATION PUBLICATION
(19) INDIA
(22) Date of filing of Application :08/11/2013

(21) Application No.9655/DELNP/2013 A
(43) Publication Date : 19/12/2014

(54) Title of the invention : METHOD FOR FAULT DIAGNOSIS ON SOLAR MODULES

(51) International classification	:G01R31/40,G01R27/26,H01L31/042
(31) Priority Document No	:PA 2011 00366
(32) Priority Date	:11/05/2011
(33) Name of priority country	:Denmark
(86) International Application No	:PCT/DK2012/050154
Filing Date	:08/05/2012
(87) International Publication No	:WO 2012/152284
(61) Patent of Addition to Application Number	:NA
Filing Date	:NA
(62) Divisional to Application Number	:NA
Filing Date	:NA

(71)**Name of Applicant :**
1)EMAZYS TECHNOLOGIES APS
Address of Applicant :Forskerparken 10 DK 5230 Odense M Denmark
(72)**Name of Inventor :**
1)ANDERSEN Anders Rand

(57) Abstract :
There is provided a method for fault diagnosis on a solar module in which electrical potentials are checked within the solar module to provide the possibility for carrying out the fault diagnosis even when the solar module is not exposed to sun light. Specifically the solar cell module is excited by both a DCBIAS and an AC voltage over a wide frequency range and the impedance of the solar cell module is measured as a function of the frequency response.There is also provided an embodiment wherein time domain reflectometry (TDR) is used in combination with the DC BIAS and AC voltage based fault diagnosis.Based on the method safety operations can be carried out as a part of the integrated electric functionality.

No. of Pages : 16 No. of Claims : 6

(12) PATENT APPLICATION PUBLICATION
(19) INDIA
(22) Date of filing of Application :08/11/2013
(21) Application No.9656/DELNP/2013 A
(43) Publication Date : 19/12/2014

(54) Title of the invention : METHOD AND SYSTEM FOR FORMING A SUPPORT STRUCTURE

(51) International classification :B28B21/18,B28B7/28,B28B21/86
(31) Priority Document No :2011901350
(32) Priority Date :11/04/2011
(33) Name of priority country :Australia
(86) International Application No :PCT/AU2012/000371
Filing Date :11/04/2012
(87) International Publication No :WO 2012/139160
(61) Patent of Addition to Application Number :NA
Filing Date :NA
(62) Divisional to Application Number :NA
Filing Date :NA

(71)**Name of Applicant :**
1)VIJAY INVESTMENTS PTY LTD
Address of Applicant :165 Scotchmer Street Fitzroy North Victoria 3068 Australia
(72)**Name of Inventor :**
1)HUME Tamas Dale

(57) Abstract :
A method for forming an elongate support structure having a central hollow portion is disclosed including arranging an elongate core member to extend horizontally and then forming a core assembly by locating a first tensioning member at a first end where the first tensioning member including tensioning elements extending from the first end of the core member along the outside of the core member to a second tensioning member located at the second end of the core member. An external mould assembly is attached to the core assembly between the first and second tensioning members to form a combined mould and core assembly and to also form a cavity extending around and along the central core member through which the plurality of tensioning elements extend. The tensioning elements are then tensioned and the combined mould and core assembly is then positioned in an upright orientation and concrete injected into the cavity formed between the elongate core member and the external mould assembly.

No. of Pages : 26 No. of Claims : 22

(12) PATENT APPLICATION PUBLICATION
(19) INDIA
(22) Date of filing of Application :08/11/2013
(21) Application No.9635/DELNP/2013 A
(43) Publication Date : 19/12/2014

(54) Title of the invention : A WELLBORE SERVING SYSTEM AND METHOD THEREOR

(51) International classification :E21B34/10,E21B23/04
(31) Priority Document No :13/151457
(32) Priority Date :02/06/2011
(33) Name of priority country :U.S.A.
(86) International Application No :PCT/GB2012/000140
Filing Date :10/02/2012
(87) International Publication No :WO 2012/164236
(61) Patent of Addition to Application Number :NA
Filing Date :NA
(62) Divisional to Application Number :NA
Filing Date :NA

(71)**Name of Applicant :**
1)HALLIBURTON ENERGY SERVICES INC
Address of Applicant :10200 Bellaire Boulevard Houston Texas 77072 U.S.A.
(72)**Name of Inventor :**
1)PORTER Jesse Cale
2)PACEY Kendall Lee
3)HOWELL Matthew Todd
4)STANDRIDGE William Ellis
5)WILLIAMSON Jimmie Robert
6)SHY Perry
7)WATSON Roger

(57) Abstract :
Disclosed herein is a wellbore servicing system comprising a tubular string a first sleeve system incorporated within the tubular string the first sleeve system comprising a first sliding sleeve (260) at least partially carried within a first ported case (208) the first sleeve system being selectively restricted from movement relative to the first ported case by a first restrictor (274) while the first restrictor is enabled and a first delay system (268 291) configured to selectively restrict movement of the first sliding sleeve relative to the first ported case while the first restrictor is disabled; a second sleeve system incorporated within the tubular string the second sleeve system comprising a second sliding sleeve at least partially carried within a second ported case the second sleeve system being selectively restricted from movement relative to the second ported case by a second restrictor while the second restrictor is enabled. The restrictor (274) is held in place by shear pin (284). In order to disable restrictor (274) a drop ball is seated on set (270) and pressure is increased to shear pin (284). Seat (270) is comprised of three or more radial segments. A protective sheath (272) is covering one or more surfaces of the seat to protect the set from contact with well fluid and to retain the segments in the close conformation.

No. of Pages : 75 No. of Claims : 25

(12) PATENT APPLICATION PUBLICATION
(19) INDIA
(22) Date of filing of Application :08/11/2013
(21) Application No.9636/DELNP/2013 A
(43) Publication Date : 19/12/2014

(54) Title of the invention : A SETTABLE COMPOSITION CONTAINING METAKAOLIN HAVING REDUCED PORTLAND CEMENT CONTENT AND METHOD RELATING THERETO

(51) International classification :C04B28/02,C04B28/22,C09K8/42
(31) Priority Document No :13/107055
(32) Priority Date :13/05/2011
(33) Name of priority country :U.S.A.
(86) International Application No :PCT/GB2012/000430
Filing Date :11/05/2012
(87) International Publication No :WO 2012/156663
(61) Patent of Addition to Application Number :NA
Filing Date :NA
(62) Divisional to Application Number :NA
Filing Date :NA

(71)**Name of Applicant :**
1)HALLIBURTON ENERGY SERVICES INC
Address of Applicant :10200 Bellaire Boulevard Houston Texas 77072 U.S.A.
(72)**Name of Inventor :**
1)SANTRA Ashok K.
2)RAVI Krishna M.
3)KEYS Crystal L.
4)IVERSON Benjamin John
5)PATIL Rahul
6)PATIL Sandip

(57) Abstract :
Of the many compositions and methods provided herein one method includes providing a settable fluid that comprises an aqueous based medium a lime composition and a cementitious blend that comprises metakaolin particulates and aluminosilicate particulates wherein the cementitious blend is essentially free of Portland cement; introducing the settable fluid into a wellbore penetrating a subterranean formation that comprises a corrosive component; and allowing the settable fluid to set therein.

No. of Pages : 28 No. of Claims : 20

(12) PATENT APPLICATION PUBLICATION
(19) INDIA
(22) Date of filing of Application :08/11/2013
(21) Application No.9637/DELNP/2013 A
(43) Publication Date : 19/12/2014

(54) Title of the invention : POLYMORPH OF LINAGLIPTIN BENZOATE

(51) International classification :C07D473/04,A61K31/522
(31) Priority Document No :11165597.3
(32) Priority Date :10/05/2011
(33) Name of priority country :EPO
(86) International Application No :PCT/EP2012/058556
Filing Date :09/05/2012
(87) International Publication No :WO 2012/152837
(61) Patent of Addition to Application Number :NA
Filing Date :NA
(62) Divisional to Application Number :NA
Filing Date :NA

(71)**Name of Applicant :**
1)SANDOZ AG
Address of Applicant :Lichtstrasse 35 CH 4056 Basel Switzerland
(72)**Name of Inventor :**
1)HOTTER Andreas
2)PICHLER Arthur

(57) Abstract :
The present invention relates to a novel polymorph of Linagliptin benzoate and to methods for its preparation. Furthermore the present invention relates to the use of the novel polymorph for the preparation of a medicament. In addition the present invention relates to pharmaceutical compositions comprising an effective amount of the novel polymorph of Linagliptin benzoate.

No. of Pages : 23 No. of Claims : 15

(12) PATENT APPLICATION PUBLICATION
(19) INDIA
(22) Date of filing of Application :08/11/2013
(21) Application No.9638/DELNP/2013 A
(43) Publication Date : 19/12/2014

(54) Title of the invention : METHOD AND APPARATUS FOR MONITORING A TREATMENT OF A PATIENT PREFERABLY FOR MONITORING HEMODIALYSIS HEMODIAFILTRATION AND/OR PERITONEAL DIALYSIS

(51) International classification :A61M1/36,A61B5/00
(31) Priority Document No :11161916.9
(32) Priority Date :11/04/2011
(33) Name of priority country :EPO
(86) International Application No :PCT/EP2012/056472
Filing Date :10/04/2012
(87) International Publication No :WO 2012/140022
(61) Patent of Addition to Application Number :NA
Filing Date :NA
(62) Divisional to Application Number :NA
Filing Date :NA

(71)**Name of Applicant :**
1)FRESENIUS MEDICAL CARE DEUTSCHLAND GMBH
Address of Applicant :Else Krner Strasse 1 61352 Bad Homburg Germany
(72)**Name of Inventor :**
1)GROSS Malte
2)KOPPERSCHMIDT Pascal
3)MAIERHOFER Andreas
4)GAGEL Alfred

(57) Abstract :
The present invention pertains to a method for monitoring a treatment of a patient preferably for monitoring hemodialysis hemodiafiltration and/or peritoneal dialysis the method comprising the steps of irradiating a sample of a dialysis liquid used in the treatment with irradiation light of at least a first irradiation wavelength detecting light emitted by the irradiated sample in at least a first detection wavelength the detection wavelength being different from the first irradiation wavelength and determining the presence and/or concentration of at least one analyte in the sample on the basis of the detected light.

No. of Pages : 33 No. of Claims : 16

(12) PATENT APPLICATION PUBLICATION
(19) INDIA
(22) Date of filing of Application :05/11/2013
(21) Application No.9529/DELNP/2013 A
(43) Publication Date : 19/12/2014

(54) Title of the invention : VISUAL TELEPHONY APPARATUS SYSTEM AND METHOD

(51) International classification :H04M11/00
(31) Priority Document No :61/516664
(32) Priority Date :05/04/2011
(33) Name of priority country :U.S.A.
(86) International Application No :PCT/US2012/000190
Filing Date :04/04/2012
(87) International Publication No :WO 2012/138400
(61) Patent of Addition to Application Number :NA
Filing Date :NA
(62) Divisional to Application Number :NA
Filing Date :NA

(71)**Name of Applicant :**
1)STOCKER Loren
Address of Applicant :PO Box 2004 Del Mar CA 92014 U.S.A.
(72)**Name of Inventor :**
1)STOCKER Loren

(57) Abstract :
A visual telephony apparatus system and method are provided. In one embodiment the visual telephony method includes a method implemented using a processor the method including the steps of: detecting at least one telephony attribute associated with a voice call directed from a voice communication device to a publicly switched telephone network number; identifying a visual content that has been preassociated with the at least one telephony attribute; initiating a request for the visual content in response to the detecting step; and receiving the visual content in response to the initiating step the visual content being received at a display device.

No. of Pages : 48 No. of Claims : 20

(12) PATENT APPLICATION PUBLICATION
(19) INDIA
(22) Date of filing of Application :05/11/2013
(21) Application No.9530/DELNP/2013 A
(43) Publication Date : 19/12/2014

(54) Title of the invention : SURFACE COVERING MATERIALS AND PRODUCTS

(51) International classification :C08L57/00,C08J3/24,C08K3/00
(31) Priority Document No :61/480669
(32) Priority Date :29/04/2011
(33) Name of priority country :U.S.A.
(86) International Application No :PCT/CA2012/050261
Filing Date :25/04/2012
(87) International Publication No :WO 2012/145844
(61) Patent of Addition to Application Number :NA
Filing Date :NA
(62) Divisional to Application Number :NA
Filing Date :NA

(71)**Name of Applicant :**
1)AMERICAN BILTRITE (CANADA) LTD.
Address of Applicant :200 Bank Street Sherbrooke Qubec J1H 4K3 Canada
(72)**Name of Inventor :**
1)MERCIER Jean claude
2)FITZBACK Stphane

(57) Abstract :
In various embodiments the present inventions provide a heat and color stable flooring materials/product comprising between about 1 wt% to about 50 wt% a polyolefin based elastomer material; between about 2 wt% to about 50 wt% a polyolefin based thermoplastic material; between about 20 wt% to about 75 wt% a filler; and between about 0.25 wt% to about 5 wt% a curing system containing a peroxide. Also provided in various embodiments are method of making and using such a flooring material/product.

No. of Pages : 31 No. of Claims : 54

(12) PATENT APPLICATION PUBLICATION
(19) INDIA
(22) Date of filing of Application :05/11/2013
(21) Application No.9531/DELNP/2013 A
(43) Publication Date : 19/12/2014

(54) Title of the invention : METHOD AND SYSTEM FOR EFFICIENT PRODUCTION OF DISSOLVING PULP IN A KRAFT MILL PRODUCING PAPER GRADE PULP WITH A CONTINUOUS TYPE DIGESTER

(51) International classification :D21C3/02
(31) Priority Document No :61/473712
(32) Priority Date :08/04/2011
(33) Name of priority country :U.S.A.
(86) International Application No :PCT/IB2012/000892
Filing Date :09/04/2012
(87) International Publication No :WO 2012/137076
(61) Patent of Addition to Application Number :NA
Filing Date :NA
(62) Divisional to Application Number :NA
Filing Date :NA

(71)**Name of Applicant :**
1)PEC TECH ENGINEERING AND CONSTRUCTION PTE LTD
Address of Applicant :80 Raffles Place #50 1 UOB Plaza 1 Singapore 048624 Singapore
(72)**Name of Inventor :**
1)VAN LEE Richard Constantine
2)DEVANESAN Alagaratnam Joseph

(57) Abstract :
A method and system for pulp manufacturing used in connection with a kraft process includes a vertical pressure vessel operated in batch mode a single vessel or multi vessel continuous digester and other equipment for further processing brown stock such as for washing oxygen delignification bleaching and drying. A feeder and conveyance system may include a high pressure feeder or direct pump system and selectively provides fiber containing material to the continuous digester when making lower grade pulp product and to the vertical pressure vessel when making higher grade pulp such as dissolving pulp. The vertical pressure vessel is used for pre hydrolysis and neutralization after which the resulting pulp is fed to the continuous digester for cooking. White liquor and black liquor from the same mill may be used for the neutralization fluids. The same continuous digester is selectively used for cooking in connection with making pulp products of different grades or quality.

No. of Pages : 60 No. of Claims : 50

(12) PATENT APPLICATION PUBLICATION
(19) INDIA
(22) Date of filing of Application :05/11/2013
(21) Application No.9532/DELNP/2013 A
(43) Publication Date : 19/12/2014

(54) Title of the invention : SCREW IMPLANT FOR A JAW BONE HAVING A CORONAL COMPRESSION SCREW AND AN APICAL SELF CUTTING SCREW

(51) International classification :A61C8/00
(31) Priority Document No :20 2011 107 550.1
(32) Priority Date :07/11/2011
(33) Name of priority country :Germany
(86) International Application No :PCT/EP2012/004590
Filing Date :05/11/2012
(87) International Publication No :WO 2013/068088
(61) Patent of Addition to Application Number :NA
Filing Date :NA
(62) Divisional to Application Number :NA
Filing Date :NA

(71)**Name of Applicant :**
1)BIOMED EST
Address of Applicant :Austrasse 49 FL 9490 Vaduz Liechtenstein
(72)**Name of Inventor :**
1)IHDE Stefan

(57) Abstract :
The invention relates to a screw implant (1) for a jaw bone with coronal compression thread (4) with thread filaments (lla-llj) and apical self-cutting thread (6) with threaded helices (16a, 16b), the thread pitches are about the same, wherein below to a coronal implant head (2) in apical direction a compression thread (4) is following, this thread being positioned spongious bone substance. Below this, a cutting thread (6) to the end position in the apical cortical bone substance is following. Both the core diameter and the outer diameter of the compression screw thread (4) are tapered at least in the apical region, becoming thinner towards apical. The invention is characterized in that the axial length of the compression thread (4) equals approximately the 2.5-15fold +- 25% of the axial length of the cutting thread (6), and in that the radial thread depth (14) of the cutting thread is 1.5 fold +- 25% of the ccompression thread, and that the wedge angle (P) of the thread spirals (1 la-1 Ij) of the compression screw thread (4) is greater, than the wedge angle (a) of the thread spirals (16a, 16b) of the cutting thread (6), preferably 1.5x + / - 25%.

No. of Pages : 23 No. of Claims : 17

(12) PATENT APPLICATION PUBLICATION
(19) INDIA
(22) Date of filing of Application :08/11/2013
(21) Application No.9619/DELNP/2013 A
(43) Publication Date : 19/12/2014

(54) Title of the invention : COMBUSTION CHAMBER CONSTRUCTION FOR OPPOSED PISTON ENGINES

(51) International classification :F02B23/06,F02B25/08,F02B75/28
(31) Priority Document No :61/519194
(32) Priority Date :18/05/2011
(33) Name of priority country :U.S.A.
(86) International Application No :PCT/US2012/038061
Filing Date :16/05/2012
(87) International Publication No :WO 2012/158756
(61) Patent of Addition to Application Number :NA
Filing Date :NA
(62) Divisional to Application Number :NA
Filing Date :NA

(71)**Name of Applicant :**
1)ACHATES POWER INC.
Address of Applicant :4060 Sorrento Valley Boulevard San Diego CA 92121 U.S.A.
(72)**Name of Inventor :**
1)BURTON Tristan M.
2)REDON Fabien G.

(57) Abstract :
An opposed piston engine includes a ported cylinder and a pair of pistons disposed to reciprocate in the bore of the cylinder. A combustion chamber is defined by opposing shaped piston end surfaces as the pistons approach respective top dead center (TDC) locations in the bore. At the end of scavenging the shaped end surfaces of the pistons interact with swirl to produce turbulence in the charge air motion in the combustion chamber; the additional bulk motions include tumble. Fuel is injected into the turbulent charge air motion along a major axis of the combustion chamber.

No. of Pages : 34 No. of Claims : 14

(12) PATENT APPLICATION PUBLICATION
(19) INDIA
(22) Date of filing of Application :08/11/2013
(21) Application No.9662/DELNP/2013 A
(43) Publication Date : 19/12/2014

(54) Title of the invention : DISINFECTION OF PACKAGED ARTICLES

(51) International classification :B65B55/02,A23L3/3409
(31) Priority Document No :1107692.4
(32) Priority Date :09/05/2011
(33) Name of priority country :U.K.
(86) International Application No :PCT/GB2012/051017
Filing Date :09/05/2012
(87) International Publication No :WO 2012/153134
(61) Patent of Addition to Application Number :NA
Filing Date :NA
(62) Divisional to Application Number :NA
Filing Date :NA

(71)**Name of Applicant :**
1)OZONICA LIMITED
Address of Applicant :5 Giffard Court Millbrook Close Northampton Northamptonshire NN5 5JF U.K.
(72)**Name of Inventor :**
1)SNOWBALL Malcolm Robert

(57) Abstract :
An apparatus for generating ozone inside packaged articles comprises an electrode assembly in which coplanar electrodes are supported along a contact surface. The electrodes are solid state conductive electrodes. These electrodes may be interdigitated and/or arranged with uniform spacing therebetween along a portion of their length. Where the electrodes are straight they may be parallel but other shapes can also be evenly spaced. In some examples the electrodes are partially insulated and partially exposed. In some examples the electrodes are embedded/potted in an insulator to exclude air spaces from around the electrodes.

No. of Pages : 44 No. of Claims : 30

(12) PATENT APPLICATION PUBLICATION
(19) INDIA
(22) Date of filing of Application :11/11/2013
(21) Application No.9667/DELNP/2013 A
(43) Publication Date : 19/12/2014

(54) Title of the invention : ROOM STERILIZATION METHOD AND SYSTEM

(51) International classification :A61L2/10,H04W84/12
(31) Priority Document No :61/475722
(32) Priority Date :15/04/2011
(33) Name of priority country :U.S.A.
(86) International Application No :PCT/US2012/033547
Filing Date :13/04/2012
(87) International Publication No :WO 2012/142427
(61) Patent of Addition to Application Number :NA
Filing Date :NA
(62) Divisional to Application Number :NA
Filing Date :NA

(71)**Name of Applicant :**
1)TRAPANI Samuel Richard
Address of Applicant :1253 Clover St. Rochester NY 14610 U.S.A.
(72)**Name of Inventor :**
1)TRAPANI Samuel Richard

(57) Abstract :
A sterilization system consisting of a mobile emitter a sensing subsystem and a data logging subsystem is described. The emitter has one or more UV emitting lamps or devices. The sensing system comprises at least one remote UV sensor and at least one door sensor. The door sensor comprises a safety shut off door detector and may contain an emergency stop detector and arming detector to protect people from being exposed to UV energy. The system has a remote control for starting stopping and setting system parameters which include but are not limited to: treatment time dosage room size room number unit number floor facility name operator name operator identification number password default dosage values dosage and patient identification number. The number of treatments per unit of time can be maximized because of the use of incident light measurement.

No. of Pages : 28 No. of Claims : 22

(12) PATENT APPLICATION PUBLICATION
(19) INDIA
(22) Date of filing of Application :11/11/2013
(21) Application No.9668/DELNP/2013 A
(43) Publication Date : 19/12/2014

(54) Title of the invention : METHOD FOR MANUFACTURING RUBBER POLYMER AND RUBBER REINFORCED GRAFT COPOLYMER

(51) International classification :C08F2/22,C08F279/04,C08F20/10
(31) Priority Document No :1020110120354
(32) Priority Date :17/11/2011
(33) Name of priority country :Republic of Korea
(86) International Application No :PCT/KR2012/009477
Filing Date :09/11/2012
(87) International Publication No :WO 2013/073800
(61) Patent of Addition to Application Number :NA
Filing Date :NA
(62) Divisional to Application Number :NA
Filing Date :NA

(71)**Name of Applicant :**
1)LG CHEM LTD.
Address of Applicant :128 Yeoui daero Yeongdeungpo gu Seoul 150 721 Republic of Korea
(72)**Name of Inventor :**
1)CHAI Joo Byung
2)JUNG Yu Sung
3)HAN Won Deok
4)YOO Keun Hoon
5)LEE Chan Hong
6)JEON Tae Young

(57) Abstract :
Disclosed is a method for preparing a rubber latex which includes adding a basic solution to an initial reaction hydrophilic monomer and a small amount of fatsoluble monomer when a polymerization conversion ratio is 90% or more to form particles having a small diameter and superior stability, ionizing an end of the particles to secure stability of the particles and growing the formed particles, and thereby obtains a stable latex with a large particle diameter using a minimal amount of emulsifying agent and minimizes gas generation and heat discoloration derived from the emulsifying agent.

No. of Pages : 18 No. of Claims : 15

(12) PATENT APPLICATION PUBLICATION
(19) INDIA
(22) Date of filing of Application :11/11/2013
(21) Application No.9670/DELNP/2013 A
(43) Publication Date : 19/12/2014

(54) Title of the invention : DEVICE AND METHOD FOR SIGNATURE ADAPTATION AND AN OBJECT WITH SUCH A DEVICE

(51) International classification :F41H3/00
(31) Priority Document No :11505187
(32) Priority Date :07/06/2011
(33) Name of priority country :Sweden
(86) International Application No :PCT/SE2012/050596
Filing Date :04/06/2012
(87) International Publication No :WO 2012/169954
(61) Patent of Addition to Application Number :NA
Filing Date :NA
(62) Divisional to Application Number :NA
Filing Date :NA

(71)**Name of Applicant :**
1)BAE SYSTEMS H„GGLUNDS AKTIEBOLAG
Address of Applicant :S 891 82 –rnskldsvik Sweden
(72)**Name of Inventor :**
1)SJ–LUND Peder

(57) Abstract :
The invention pertains to a device for signature adaptation comprising at least one surface element (100; 300; 500) arranged to assume a determined thermal distribution wherein said surface element comprises at least one temperature generating element (150; 450a 450b 450c) arranged to generate at least one predetermined temperature gradient to a portion of said at least one surface element. Said surface element (100; 300; 500) comprising at least one display surface (50) wherein said display surface (50) is arranged to radiate at least one predetermined spectrum. The invention also pertains to a method for signature adaptation and an object such as a craft provided with the device according to the invention.

No. of Pages : 95 No. of Claims : 22

(12) PATENT APPLICATION PUBLICATION
(19) INDIA
(22) Date of filing of Application :31/10/2013
(21) Application No.9413/DELNP/2013 A
(43) Publication Date : 19/12/2014

(54) Title of the invention : WELDING MATERIAL AND WELDED JOINT

(51) International classification :B23K35/30,C22C38/58,G21C5/00
(31) Priority Document No :2011107863
(32) Priority Date :13/05/2011
(33) Name of priority country :Japan
(86) International Application No :PCT/JP2012/062090
Filing Date :11/05/2012
(87) International Publication No :WO 2012/157542
(61) Patent of Addition to Application Number :NA
Filing Date :NA
(62) Divisional to Application Number :NA
Filing Date :NA

(71)**Name of Applicant :**
1)NIPPON STEEL & SUMITOMO METAL CORPORATION
Address of Applicant :6 1 Marunouchi 2 chome Chiyoda ku Tokyo 1008071 Japan
(72)**Name of Inventor :**
1)OSUKI Takahiro
2)TAKEDA Kiyoko
3)YOKOYAMA Tetsuo
4)ANADA Hiroyuki
5)TOYODA Masatoshi

(57) Abstract :
There is provided a welding material used for welding of SUS310 stainless steel base metal that contains at least one of Nb and V and is excellent in intergranidar corrosion resistance, the chemical composition of the welding material consisting, by mass percent, of C: 0.02% or less. Si- 2% or less, Mn: 2% or less, Cr: 26 to 50%, N: 0.15% or less, P: 0.02% or less, S: 0.002% or less, and Ni: a content percentage satisfying [5 < Ni < Cr - 14], and the balance of Fe and impurities. Also, there is provided a welding joint of an austenitic stainless steel, which consists of the base metal and a weld metal formed by using the welding material.

No. of Pages : 28 No. of Claims : 5

(12) PATENT APPLICATION PUBLICATION
(19) INDIA
(22) Date of filing of Application :31/10/2013
(21) Application No.9415/DELNP/2013 A
(43) Publication Date : 19/12/2014

(54) Title of the invention : SOLAR ASSISTED VOLATILE FERMENTATION PRODUCTS PRODUCTION PROCESSES

(51) International classification :F24J1/00,C12M1/00
(31) Priority Document No :61/487492
(32) Priority Date :18/05/2011
(33) Name of priority country :U.S.A.
(86) International Application No :PCT/EP2012/002138
Filing Date :18/05/2012
(87) International Publication No :WO 2013/023713
(61) Patent of Addition to Application Number :NA
Filing Date :NA
(62) Divisional to Application Number :NA
Filing Date :NA

(71)**Name of Applicant :**
1)SCALE BIOFUEL APS
Address of Applicant :Niels Jernes Vej 10 DK 9220 Aalborg Denmark
(72)**Name of Inventor :**
1)NILSSON Dan

(57) Abstract :
The present invention provides a method and apparatus for recapturing heat from a solar assisted volatile fermentation product production process comprising harvesting a volatile fermentation product from a solar assisted fermentation product production apparatus and utilizing a heat recovery apparatus for recapturing the heat produced during the solar assisted fermentation product production process. The volatile fermentation product can be produced in an autotrophic organism or by a fermenting organism fermenting fermentable sugars from one or more sugar crops starch containing and lignocellulose containing materials.

No. of Pages : 36 No. of Claims : 7

(12) PATENT APPLICATION PUBLICATION
(19) INDIA
(22) Date of filing of Application :31/10/2013
(21) Application No.9416/DELNP/2013 A
(43) Publication Date : 19/12/2014

(54) Title of the invention : METHOD AND SYSTEM FOR ACQUIRING PATIENT RELATED DATA

(51) International classification :A61B5/00
(31) Priority Document No :PA 2011 00412
(32) Priority Date :31/05/2011
(33) Name of priority country :Denmark
(86) International Application No :PCT/DK2012/050185
Filing Date :30/05/2012
(87) International Publication No :WO 2012/163360
(61) Patent of Addition to Application Number :NA
Filing Date :NA
(62) Divisional to Application Number :NA
Filing Date :NA

(71)**Name of Applicant :**
1)RADIOMETER MEDICAL APS
Address of Applicant :…kandevej 21 DK 2700 Br¸nsh¸j Denmark
(72)**Name of Inventor :**
1)CARLBERG Anders
2)OLOFSSON Niclas

(57) Abstract :
A method, performed by a data processing system, of registering patient-related data, the method comprising: receiving, from a registration device, a set of identification data items and one or more identification time stamps, each identification time stamp being associated with at least one of the identification data items; wherein the set of identification data items comprises a device identification data item identifying an electronic device and a patient identification data item identifying a patient; receiving, from the electronic device, patient-related data to be registered and an acquisition time stamp indicative of an acquisition time at which the patient-related data has been acquired; associating the received patient-related data with an identified patient based on at least the received device identification data item, the received patient identification data item, the received one or more identification time stamps and the received acquisition time stamp.

No. of Pages : 41 No. of Claims : 22

(12) PATENT APPLICATION PUBLICATION
(19) INDIA
(22) Date of filing of Application :31/10/2013
(21) Application No.9417/DELNP/2013 A
(43) Publication Date : 19/12/2014

(54) Title of the invention : STABILIZED BIOCONTROL WATER DISPERSIBLE GRANULES

(51) International classification :A01N63/04,C12N1/14
(31) Priority Document No :61/490334
(32) Priority Date :26/05/2011
(33) Name of priority country :U.S.A.
(86) International Application No :PCT/US2012/039293
Filing Date :24/05/2012
(87) International Publication No :WO 2012/162472
(61) Patent of Addition to Application Number :NA
Filing Date :NA
(62) Divisional to Application Number :NA
Filing Date :NA

(71)**Name of Applicant :**
1)SYNGENTA PARTICIPATIONS AG
Address of Applicant :Schwarzwaldallee 215 CH4058 Basel Switzerland
(72)**Name of Inventor :**
1)TYLER Tammy
2)SWANSON James Alan

(57) Abstract :
The present invention provides a stabilized water dispersible granule biocontrol composition comprising at least one non-toxigenic strain of Aspergillus, at least one water-soluble filler and at least one anionic surfactant.

No. of Pages : 13 No. of Claims : 11

(12) PATENT APPLICATION PUBLICATION
(19) INDIA
(22) Date of filing of Application :31/10/2013
(21) Application No.9419/DELNP/2013 A
(43) Publication Date : 19/12/2014

(54) Title of the invention : ADD AND DROP SWITCH/AGGREGATOR FOR OPTICAL COMMUNICATIONS NETWORKS

(51) International classification :H04J14/02
(31) Priority Document No :11165498.4
(32) Priority Date :10/05/2011
(33) Name of priority country :EPO
(86) International Application No :PCT/EP2011/070543
Filing Date :21/11/2011
(87) International Publication No :WO 2012/152343
(61) Patent of Addition to Application Number :NA
Filing Date :NA
(62) Divisional to Application Number :NA
Filing Date :NA

(71)**Name of Applicant :**
1)TELEFONAKTIEBOLAGET L M ERICSSON (PUBL)
Address of Applicant :S 164 83 Stockholm Sweden
(72)**Name of Inventor :**
1)TESTA Francesco
2)DERRICO Antonio
3)CASANOVA Mauro Rudi

(57) Abstract :
An apparatus (300) for an optical communications network comprising a demultiplexer (302) a plurality of add/drop optical switches (304) for adding and dropping wavelength channels. The add/drop optical switches (304) arranged in a matrix (306) with a number of rows corresponding to a number of output ports of the demultiplexer (302) and a number of columns corresponding to a number of transponders (108). Each add/drop optical switch has an express input port (502) associated with an output port of the demultiplexer an add input port (508) associated with an individual transponder a drop output port (504) associated with an individual transponder and an express output port (506). The apparatus also comprises a multiplexer (308) with a plurality of input ports associated with express output ports of the add/drop optical switches.

No. of Pages : 24 No. of Claims : 16

(12) PATENT APPLICATION PUBLICATION
(19) INDIA
(22) Date of filing of Application :08/11/2013
(21) Application No.9639/DELNP/2013 A
(43) Publication Date : 19/12/2014

(54) Title of the invention : COMPRESSOR SURGE DETECTION

(51) International classification :F04D27/02,F04D29/058
(31) Priority Document No :61/503196
(32) Priority Date :30/06/2011
(33) Name of priority country :U.S.A.
(86) International Application No :PCT/US2012/040975
Filing Date :06/06/2012
(87) International Publication No :WO 2013/015885
(61) Patent of Addition to Application Number :NA
Filing Date :NA
(62) Divisional to Application Number :NA
Filing Date :NA

(71)**Name of Applicant :**
1)CARRIER CORPORATION
Address of Applicant :One Carrier Place P.o. Box 4015 Farmington CT 06034 U.S.A.
(72)**Name of Inventor :**
1)SISHTLA Vishnu M.

(57) Abstract :
A compressor (22) has a housing assembly (50) with a suction port (24) and a discharge port (26). A shaft (70) is mounted for rotation about an axis (500) and an impeller (44) is mounted to the shaft to be driven in at least a first condition so as to draw fluid in through the suction port and discharge the fluid from the discharge port. A mag¬ netic bearing system (66 67 68) supports the shaft. A controller (84) is coupled to a sensor (80 82) and configured to detect at least one of surge and pre surge rotating stall and responsive to said detection take action to prevent or counter surge.

No. of Pages : 19 No. of Claims : 20

(12) PATENT APPLICATION PUBLICATION
(19) INDIA
(22) Date of filing of Application :11/11/2013
(21) Application No.9684/DELNP/2013 A
(43) Publication Date : 19/12/2014

(54) Title of the invention : NON INVASIVE ASSESSMENT OF LIVER FAT BY CRAWLING WAVE DISPERSION WITH EMPHASIS ON ATTENUATION

(51) International classification :A61B8/08,A61B19/00
(31) Priority Document No :61/523642
(32) Priority Date :15/08/2011
(33) Name of priority country :U.S.A.
(86) International Application No :PCT/US2012/050934
Filing Date :15/08/2012
(87) International Publication No :WO 2013/025798
(61) Patent of Addition to Application Number :NA
Filing Date :NA
(62) Divisional to Application Number :NA
Filing Date :NA

(71)**Name of Applicant :**
1)UNIVERSITY OF ROCHESTER
Address of Applicant :601 Elmwood Avenue Box Ott Rochester NY 14642 U.S.A.
(72)**Name of Inventor :**
1)BARRY Christopher T.
2)RUBENS Deborah J.
3)PARKER Kevin J.

(57) Abstract :
Using a modified ultrasound device crawling waves are applied to the liver over a range of shear wave frequencies. Dispersion measurements are obtained that reflect tissue viscosity and these correlate with the degree of steatosis. A device for the process has an actuator on either side of the ultrasound transducer to apply shear waves which interfere to produce the crawling waves.

No. of Pages : 30 No. of Claims : 16

(12) PATENT APPLICATION PUBLICATION
(19) INDIA
(22) Date of filing of Application :11/11/2013
(21) Application No.9685/DELNP/2013 A
(43) Publication Date : 19/12/2014

(54) Title of the invention : ALKALINE BATTERY OPERATIONAL METHODOLOGY

(51) International classification :H01M10/48,H01M2/00
(31) Priority Document No :61/601067
(32) Priority Date :21/02/2012
(33) Name of priority country :U.S.A.
(86) International Application No :PCT/US2013/027053
Filing Date :21/02/2013
(87) International Publication No :WO 2013/126520
(61) Patent of Addition to Application Number :NA
Filing Date :NA
(62) Divisional to Application Number :NA
Filing Date :NA

(71)**Name of Applicant :**
1)THE CITY UNIVERSITY OF NEW YORK
Address of Applicant :Technology Commercialization Office 555 West 57th Street Suite 1407 New York NY 10019 U.S.A.
(72)**Name of Inventor :**
1)SHOLKLAPPER Tal
2)GALLAWAY Joshua
3)STEINGART Daniel
4)INGALE Nilesh
5)NYCE Michael

(57) Abstract :
Methods of using specific operational charge and discharge parameters to extend the life of alkaline batteries are disclosed. The methods can be used with any commercial primary or secondary alkaline battery as well as with newer alkaline battery designs including batteries with flowing electrolyte. The methods include cycling batteries within a narrow operating voltage window with minimum and maximum cut off voltages that are set based on battery characteristics and environmental conditions. The narrow voltage window decreases available capacity but allows the batteries to be cycled for hundreds or thousands of times.

No. of Pages : 24 No. of Claims : 7

(12) PATENT APPLICATION PUBLICATION
(19) INDIA
(22) Date of filing of Application :11/11/2013
(21) Application No.9687/DELNP/2013 A
(43) Publication Date : 19/12/2014

(54) Title of the invention : PERMANENT MAGNET CENTERING SYSTEM FOR BRAKE

(51) International classification :B66B11/08,F16D55/28
(31) Priority Document No :NA
(32) Priority Date :NA
(33) Name of priority country :NA
(86) International Application No :PCT/US2011/040632
Filing Date :16/06/2011
(87) International Publication No :WO 2012/173625
(61) Patent of Addition to Application Number :NA
Filing Date :NA
(62) Divisional to Application Number :NA
Filing Date :NA

(71)**Name of Applicant :**
1)OTIS ELEVATOR COMPANY
Address of Applicant :Ten Farm Springs Road Farmington CT 06032 2568 U.S.A.
(72)**Name of Inventor :**
1)PIECH Zbigniew
2)WHEELER Robert

(57) Abstract :
A brake assembly (22) for an elevator traction machine (12) is disclosed. The brake assembly (22) may include a rotating element (30) a fixed element (34) mounted in operational association with the rotating element (30) and a positioning device (36) connected to the fixed element (34). The positioning device (36) may additionally magnetically interface with the rotating element (30) to facilitate centering of the fixed element (34) relative to the rotating element (30).

No. of Pages : 23 No. of Claims : 20

(12) PATENT APPLICATION PUBLICATION
(19) INDIA
(22) Date of filing of Application :11/11/2013
(21) Application No.9688/DELNP/2013 A
(43) Publication Date : 19/12/2014

(54) Title of the invention : INFORMATION PROCESSING SYSTEM ACCESS RIGHTS MANAGEMENT METHOD INFORMATION PROCESSING DEVICE AND CONTROL METHOD AND CONTROL PROGRAM THEREFOR

(51) International classification :G06F21/24
(31) Priority Document No :2011116369
(32) Priority Date :24/05/2011
(33) Name of priority country :Japan
(86) International Application No :PCT/JP2012/003347
Filing Date :22/05/2012
(87) International Publication No :WO 2012/160814
(61) Patent of Addition to Application Number :NA
Filing Date :NA
(62) Divisional to Application Number :NA
Filing Date :NA

(71)**Name of Applicant :**
1)NEC CORPORATION
Address of Applicant :7 1 Shiba 5 chome Minato ku Tokyo 1088001 Japan
(72)**Name of Inventor :**
1)TAKAYANAGI Nao
2)MATSUDA Naohisa

(57) Abstract :
Provided is an information processing apparatus including an application interface and a device interface, 5 generated on the basis of each application, which are associated with each other. The information processing apparatus includes an access right table for storing whether the each application has an access right to a device connected to the information processing apparatus, and an access 10 control unit that controls access between the application interface and the device interface with reference to the access right table.

No. of Pages : 46 No. of Claims : 12

(12) PATENT APPLICATION PUBLICATION
(19) INDIA
(22) Date of filing of Application :11/11/2013
(21) Application No.9690/DELNP/2013 A
(43) Publication Date : 19/12/2014

(54) Title of the invention : PHARMACEUTICAL COMPOSITIONS

(51) International classification :A61K9/12
(31) Priority Document No :1108039.7
(32) Priority Date :13/05/2011
(33) Name of priority country :U.K.
(86) International Application No :PCT/GB2012/051059
Filing Date :11/05/2012
(87) International Publication No :WO 2012/156711
(61) Patent of Addition to Application Number :NA
Filing Date :NA
(62) Divisional to Application Number :NA
Filing Date :NA

(71)**Name of Applicant :**
1)MEXICHEM AMANCO HOLDING S.A. DE C.V.
Address of Applicant :Rio San Javier No. 10 Fraccionamiento Viveros del Rio Tlalnepantla Estado de Mexico c.p. 54060 Mexico
(72)**Name of Inventor :**
1)CORR Stuart
2)NOAKES Timothy James

(57) Abstract :
A pharmaceutical solution for a medication delivery apparatus especially a metered dose inhaler is described. The pharmaceutical solution comprises: (a) a liquefied propellant component consisting essentially of and preferably consisting entirely of 1 1 difluoroethane (R 152a); (b) ethanol; and (c) a drug component dissolved in the propellant/ethanol mixture consisting of at least one drug selected from the group consisting of beclomethasone dipropionate (BDP) and fluticasone propionate (FP).

No. of Pages : 24 No. of Claims : 30

(12) PATENT APPLICATION PUBLICATION
(19) INDIA
(22) Date of filing of Application :29/10/2013
(21) Application No.9306/DELNP/2013 A
(43) Publication Date : 19/12/2014

(54) Title of the invention : RUBBER MIXTURES CONTAINING SILICIC ACID AND SULFUR CONTAINING ADDITIVES

(51) International classification :B60C1/00,C08K5/36,C08K5/54
(31) Priority Document No :11164319.3
(32) Priority Date :29/04/2011
(33) Name of priority country :EPO
(86) International Application No :PCT/EP2012/057865
Filing Date :27/04/2012
(87) International Publication No :WO 2012/146764
(61) Patent of Addition to Application Number :NA
Filing Date :NA
(62) Divisional to Application Number :NA
Filing Date :NA

(71)**Name of Applicant :**
1)LANXESS DEUTSCHLAND GMBH
Address of Applicant :Kennedyplatz 1 50569 Kln Germany
(72)**Name of Inventor :**
1)WIEDEMEIER Melanie
2)WEIDENHAUPT Hermann Josef
3)FELDHUES Ulrich
4)MOLL Irene

(57) Abstract :
The invention relates to a rubber mixture containing silicic acid, produced from at least one rubber, an alkoxysilane containing sulf¼r, a cross-linking agent, a filier, optionally additional auxiliary products used in the production of rubber, wherein said mixture contains 0.1 to 15 weight parts, relative to 100 weight parts of rubber used, of a silicon-free polysulfide additive of formula (I), wherein x Stands for 0, 1, 2, 3, or 4, R1 to R4 are the same or different and mean hydrogen, C1-C6 alkyl, G-G cycloalkyl, C6-Cio aryl, or a -CH2-OR5, -CH2-CH2-OR5, -NHR5, -COR5, -COOR5, -CH2COOR5 group, wherein R5= hydrogen, C1-C6 alkyl, C5-C6 cycloalkyl, G-Go aryl, or G-G acyl and R6 to R7 are the same or different and mean hydrogen, G-G alkyl, G-G cycloalkyl, G-Go aryl, or a -CH2-OR5, -CH2-CH2-OR5, -NHR5, -COR5, -COOR5, -CH2COOR5 group, wherein R5 = hydrogen, C1-C6 alkyl, C5-C6 cycloalkyl, G-Go aryl, or G-G acyl and y and z stand independently of each other for 0, 1, or 2.

No. of Pages : 22 No. of Claims : 23

(12) PATENT APPLICATION PUBLICATION
(19) INDIA
(22) Date of filing of Application :29/10/2013
(21) Application No.9307/DELNP/2013 A
(43) Publication Date : 19/12/2014

(54) Title of the invention : RUBBER MIXTURES CONTAINING SILICIC ACID AND SULFUR CONTAINING ADDITIVES

(51) International classification :B60C1/00,C08K5/36,C08K5/54
(31) Priority Document No :11164319.3
(32) Priority Date :29/04/2011
(33) Name of priority country :EPO
(86) International Application No :PCT/EP2012/057863
Filing Date :27/04/2012
(87) International Publication No :WO 2012/146762
(61) Patent of Addition to Application Number :NA
Filing Date :NA
(62) Divisional to Application Number :NA
Filing Date :NA

(71)**Name of Applicant :**
1)LANXESS DEUTSCHLAND GMBH
Address of Applicant :Kennedyplatz 1 50569 Kln Germany
(72)**Name of Inventor :**
1)WIEDEMEIER Melanie
2)WEIDENHAUPT Hermann Josef
3)FELDHUES Ulrich
4)MOLL Irene

(57) Abstract :
The invention relates to a rubber mixture containing silicic acid, produced from at least one rubber, an alkoxysilane containing sulfur, a cross-linking agent, a filier, optionally additional auxiliary products used in the production of rubber, wherein said mixture contains 0.1 to 15 weight parts, relative to 100 weight parts of rubber used, of a silicon-free polysulfide additive of formula (I), wherein x Stands for 0, 1, or 2, Y Stands for an aliphatic, alicyclic, or aromatic group optionally substituted or containing heteroatoms, and A Stands for a group (II), wherein R1 to R2 are the same or different and mean hydrogen, C1-C6 alkyl, C5-C6 cycloalkyl, C6-Ci0 aryl, or a -CH2-OR5, -CH2-CH2- OR5, -NHR5, -COR5, - COOR5, -CH2COOR5 group, wherein R5 = hydrogen, Ci-C6 alkyl, C5-C6 cycloalkyl, C6-Ci0 aryl, or C 1-C6 acyl, or A Stands for a group (III), wherein R1 and R2 are the same or different and mean hydrogen, C1-C6 alkyl, C5-C6 cycloalkyl, C6-Cio aryl, or a -CH2-OR5, -CH2-CH2- OR5, -NHR5, -COR5, - COOR5, -CH2COOR5 group, wherein R5 = hydrogen, Ci-Ce alkyl, C5-C6 cycloalkyl, C6-C10 aryl, or G-G acyl, or A Stands for a group (IV), wherein R1 to R2 are the same or different and mean hydrogen, C1-C6 alkyl, C5-C6 cycloalkyl, C6 -Ci0 aryl, or a -CH2-OR5, -CH2-CH2-OR5, -NHR5, -COR5, -COOR5, -CH2COOR5 group, wherein R5 = hydrogen, G-G alkyl, G-G cycloalkyl, G-Go aryl, or C1-C6 acyl and R6 means hydrogen, C1-C6 alkyl, C5-C6 cycloalkyl, C6-Ci0 aryl, or a -CH2-OR5, -CH2-CH2-OR5, -NHR5, -COR5, -COOR 5, -CH2COOR5 group, wherein R5 = hydrogen, G-G alkyl, G-G cycloalkyl, G-Go aryl, or G - C6 acyl, and y Stands for 0, 1, or 2.

No. of Pages : 35 No. of Claims : 31

(12) PATENT APPLICATION PUBLICATION
(19) INDIA
(22) Date of filing of Application :11/11/2013
(21) Application No.9700/DELNP/2013 A
(43) Publication Date : 19/12/2014

(54) Title of the invention : FEMININE HYGIENE ABSORBENT ARTICLE COMPRISING A SUPERABSORBENT FOAM OF HIGH SWELL RATE

(51) International classification :A61L15/24,A61L15/42,A61L15/60
(31) Priority Document No :61/487392
(32) Priority Date :18/05/2011
(33) Name of priority country :U.S.A.
(86) International Application No :PCT/US2012/038573
Filing Date :18/05/2012
(87) International Publication No :WO 2012/159032
(61) Patent of Addition to Application Number :NA
Filing Date :NA
(62) Divisional to Application Number :NA
Filing Date :NA

(71)**Name of Applicant :**
1)THE PROCTER & GAMBLE COMPANY
Address of Applicant :One Procter & Gamble Plaza Cincinnati Ohio 45202 U.S.A.
(72)**Name of Inventor :**
1)GRAY Brian Francis
2)DI CINTIO Achille
3)CARLUCCI Giovanni
4)ZIEMER Antje
5)KOWALSKI Anna Eva
6)BAUER Ernst Juergen
7)BRUHNS Stefan

(57) Abstract :
This invention relates to a feminine hygiene absorbent article comprising superabsorbent foams obtainable by foaming an aqueous mixture comprising at least one monoethylenically unsaturated monomer bearing acid groups at least one blowing agent at least one crosslinker and at least one surfactant polymerizing the foamed mixture and drying the polymerized mixture to the foams and also to their use for absorbing aqueous fluids.

No. of Pages : 35 No. of Claims : 19

(12) PATENT APPLICATION PUBLICATION
(19) INDIA
(22) Date of filing of Application :11/11/2013
(21) Application No.9701/DELNP/2013 A
(43) Publication Date : 19/12/2014

(54) Title of the invention : METHODS AND DEVICES FOR CONTENT DISTRIBUTION

(51) International classification :H04W4/02,H04L29/08,H04W8/00
(31) Priority Document No :61/488227
(32) Priority Date :20/05/2011
(33) Name of priority country :U.S.A.
(86) International Application No :PCT/EP2011/067833
Filing Date :12/10/2011
(87) International Publication No :WO 2012/159684
(61) Patent of Addition to Application Number :NA
Filing Date :NA
(62) Divisional to Application Number :NA
Filing Date :NA

(71)**Name of Applicant :**
1)TELEFONAKTIEBOLAGET L M ERICSSON (PUBL)
Address of Applicant :S 16483 Stockholm Sweden
(72)**Name of Inventor :**
1)EL KHAYAT Ibtissam
2)PERKUHN Heiko

(57) Abstract :
To control content distribution to plural mobile entities (20 25 27) a device (10) for managing the distribution of the content may determine mobile entities (20 25 27) which participate in sharing the same content and which are located in the same region. The mobile entities (20 25 27) respectively have a first interface for communication with a mobile communication network (2 4 5) and a second interface for forming an ad hoc network with another mobile entity (25 27). A message indicating at least one peer address of a peer mobile entity (25 27) may be selectively transmitted to a mobile entity (20). The peer address allows the mobile entity (20) to retrieve at least a piece of the content over the second interface from another mobile entity (25 27).

No. of Pages : 48 No. of Claims : 25

(12) PATENT APPLICATION PUBLICATION
(19) INDIA
(22) Date of filing of Application :08/11/2013
(21) Application No.9620/DELNP/2013 A
(43) Publication Date : 19/12/2014

(54) Title of the invention : ACTIVE COMPOUND COMBINATIONS

(51) International classification :A01N47/38,A01N43/653,A01P3/00
(31) Priority Document No :11166381.1
(32) Priority Date :17/05/2011
(33) Name of priority country:EPO
(86) International Application No :PCT/EP2012/058932
Filing Date :14/05/2012
(87) International Publication No :WO 2012/156368
(61) Patent of Addition to Application Number :NA
Filing Date :NA
(62) Divisional to Application Number :NA
Filing Date :NA

(71)**Name of Applicant :**
1)BAYER INTELLECTUAL PROPERTY GMBH
Address of Applicant :Alfred Nobel Str. 10 40789 Monheim Germany
(72)**Name of Inventor :**
1)G–HLICH Frank
2)KRAUS Anton
3)WACHENDORFF NEUMANN Ulrike

(57) Abstract :
The present invention relates to active compound combinations in particular within a fungicide composition which comprises (A) Prothioconazole and (B) Iprodione. Moreover the invention relates to a method for curatively or preventively controlling the phytopathogenic fungi of plants or crops to the use of a combination according to the invention for the treatment of seed to a method for protecting a seed and not at least to the treated seed.

No. of Pages : 29 No. of Claims : 12

(12) PATENT APPLICATION PUBLICATION
(19) INDIA
(22) Date of filing of Application :08/11/2013
(21) Application No.9621/DELNP/2013 A
(43) Publication Date : 19/12/2014

(54) Title of the invention : INTERNALLY COOLED HIGH COMPRESSION LEAN BURNING INTERNAL COMBUSTION ENGINE

(51) International classification :F02B47/02
(31) Priority Document No :61/474240
(32) Priority Date :11/04/2011
(33) Name of priority country :U.S.A.
(86) International Application No :PCT/US2012/033088
Filing Date :11/04/2012
(87) International Publication No :WO 2012/142135
(61) Patent of Addition to Application Number :NA
Filing Date :NA
(62) Divisional to Application Number :NA
Filing Date :NA

(71)**Name of Applicant :**
1)NOSTRUM ENERGY PTE. LTD.
Address of Applicant :24 Boon Lay Way #01 73 Tradehub 21 609969 Singapore
(72)**Name of Inventor :**
1)MULYE Nirmal

(57) Abstract :
An internally cooled internal combustion piston engine and method of operating a piston engine is provided with the combination of liquid water injection higher compression ratios than conventional engines and leaner air fuel mixtures than conventional engines. The effective compression ratio of the engines herein is greater than 13:1. The engines may employ gasoline or natural gas and use spark ignition or the engines may employ a diesel type fuel and use compression ignition. The liquid water injection provides internal cooling reducing or eliminating the heat rejection to the radiator reduces engine knock and reduces NOx emissions. The method of engine operation using internal cooling with liquid water injection high compression ratio and lean air fuel mixture allow for more complete and efficient combustion and therefore better thermal efficiency as compared to conventional engines.

No. of Pages : 75 No. of Claims : 202

(12) PATENT APPLICATION PUBLICATION
(19) INDIA
(22) Date of filing of Application :08/11/2013
(21) Application No.9622/DELNP/2013 A
(43) Publication Date : 19/12/2014

(54) Title of the invention : CALIBRATING ROTATIONAL ACCELEROMETERS

(51) International classification :G01P21/00
(31) Priority Document No :1107759.1
(32) Priority Date :10/05/2011
(33) Name of priority country :U.K.
(86) International Application No :PCT/GB2012/050962
Filing Date :03/05/2012
(87) International Publication No :WO 2012/153105
(61) Patent of Addition to Application Number :NA
Filing Date :NA
(62) Divisional to Application Number :NA
Filing Date :NA

(71)**Name of Applicant :**
1)BAE SYSTEMS PLC
Address of Applicant :6 Carlton Gardens London SW1Y 5AD U.K.
(72)**Name of Inventor :**
1)FLOOKS Daniel David
2)WEAVER Michael Edward

(57) Abstract :
A method and system for calibrating a rotational accelerometer. The method includes attaching a rotational accelerometer (118A) to be tested to a plate (104) fitted with first (112A) and second (112B) linear accelerometers and vibrating (302) the plate. Angular acceleration measurements from the rotational accelerometer and linear acceleration measurements from the first 10 and second linear accelerometers are obtained (304) during the vibrating. The linear acceleration measurements are converted (306) into angular acceleration values and data representing or usable for a comparison of the angular acceleration measurements from the rotational accelerometer and the converted angular acceleration values is generated (308).

No. of Pages : 21 No. of Claims : 15

(12) PATENT APPLICATION PUBLICATION
(19) INDIA
(22) Date of filing of Application :08/11/2013
(21) Application No.9623/DELNP/2013 A
(43) Publication Date : 19/12/2014

(54) Title of the invention : CYCLIC ADSORPTION PROCESS USING CENTRIFUGAL COMPRESSORS

(51) International classification :B01D53/047,F01D17/00
(31) Priority Document No :13/168264
(32) Priority Date :24/06/2011
(33) Name of priority country :U.S.A.
(86) International Application No :PCT/US2012/041862
Filing Date :11/06/2012
(87) International Publication No :WO 2012/177431
(61) Patent of Addition to Application Number :NA
Filing Date :NA
(62) Divisional to Application Number :NA
Filing Date :NA

(71)**Name of Applicant :**
1)PRAXAIR TECHNOLOGY INC.
Address of Applicant :39 Old Ridgebury Road Danbury CT 06810 U.S.A.
(72)**Name of Inventor :**
1)BELANGER Paul W.
2)MANNING Michael S.
3)ROSINSKI Andrew C.

(57) Abstract :
A cyclic adsorption process is provided the process containing one or more adsorber vessels undergoing the steps of at least pressurization and depressurization and driven by one or more variable speed centrifugal machines operating under acceleration and deceleration conditions and adjusted to the steps vessel size and process conditions employed wherein the process cycle time is greater than the ratio of the change in inertia defined the maximum energy that can be lost during a cycle due to inertia changes to 0.3 times the total power of the one of more centrifugal machines that would be consumed in the absence of inertial effects.

No. of Pages : 26 No. of Claims : 23

(12) PATENT APPLICATION PUBLICATION
(19) INDIA
(22) Date of filing of Application :08/11/2013
(21) Application No.9624/DELNP/2013 A
(43) Publication Date : 19/12/2014

(54) Title of the invention : SECURE TRANSMISSION METHOD AND APPARATUS FOR TRANSPORT STREAM

(51) International classification :H04N21/462
(31) Priority Document No :201110088037.0
(32) Priority Date :08/04/2011
(33) Name of priority country :China
(86) International Application No :PCT/CN2012/073658
Filing Date :09/04/2012
(87) International Publication No :WO 2012/136152
(61) Patent of Addition to Application Number :NA
Filing Date :NA
(62) Divisional to Application Number :NA
Filing Date :NA

(71)**Name of Applicant :**
1)UNITEND TECHNOLOGIES INC.
Address of Applicant :22nd Floor Qingyundangdai Building No.43 Beisanhuan Xilu Haidian District Beijing 100086 China
(72)**Name of Inventor :**
1)WANG Xingjun

(57) Abstract :
Provided are a secure transmission method and apparatus for transport stream (TS) the method is applied to a receiving terminal of a digital television broadcasting system comprising: after receiving a TS a first device in the receiving terminal encrypts the received TS using a key already negotiated with a second device in the receiving terminal and utilizing a determined encryption algorithm and sends the encrypted TS to the second device in the receiving terminal; after receiving the encrypted TS the second device in the receiving terminal decrypts the received encrypted TS using the key and utilizing a decryption algorithm corresponding to the encryption algorithm. Using the present invention can protect the security of the TS transmission.

No. of Pages : 26 No. of Claims : 16

(12) PATENT APPLICATION PUBLICATION
(19) INDIA
(22) Date of filing of Application :05/11/2013
(21) Application No.9533/DELNP/2013 A
(43) Publication Date : 19/12/2014

(54) Title of the invention : APPARATUS FOR TREATMENT OF PLANTS

(51) International classification :A01K47/06,A01G7/06,A01K51/00
(31) Priority Document No :61/472872
(32) Priority Date :07/04/2011
(33) Name of priority country :U.S.A.
(86) International Application No :PCT/CA2012/000288
Filing Date :03/04/2012
(87) International Publication No :WO 2012/135940
(61) Patent of Addition to Application Number :NA
Filing Date :NA
(62) Divisional to Application Number :NA
Filing Date :NA

(71)**Name of Applicant :**
1)BEE VECTORING TECHNOLOGY INC.
Address of Applicant :48 William Street East Caledon Ontario L7K 1N7 Canada
(72)**Name of Inventor :**
1)COLLINSON Michael Howard D. Hearn
2)MASON Todd Gordon
3)SUTTON John Clifford
4)KEVAN Peter G.

(57) Abstract :
A tray for positioning in an exit path of a bee hive comprises a base a bee entrance end and a bee exit end. Spaced apart side walls extend upwardly from the base. The sidewalls extend generally lengthwise between the bee entrance end and bee exit end. A plurality of posts extend upwardly from the base and are positioned between the bee entrance end and the bee exit end. The posts are generally circular in cross section. The posts act as obstacles around which the bees must walk to reach the bee exit end from the bee entrance end.

No. of Pages : 36 No. of Claims : 32

(12) PATENT APPLICATION PUBLICATION
(19) INDIA
(22) Date of filing of Application :05/11/2013
(21) Application No.9534/DELNP/2013 A
(43) Publication Date : 19/12/2014

(54) Title of the invention : STERILIZED POLYETHERIMIDE ARTICLES

(51) International classification :C08J7/12,A61L2/14,A61L2/20
(31) Priority Document No :61/493163
(32) Priority Date :03/06/2011
(33) Name of priority country :U.S.A.
(86) International Application No :PCT/US2012/040443
Filing Date :01/06/2012
(87) International Publication No :WO 2012/167068
(61) Patent of Addition to Application Number :NA
Filing Date :NA
(62) Divisional to Application Number :NA
Filing Date :NA

(71)**Name of Applicant :**
1)SABIC INNOVATIVE PLASTICS IP B.V.
Address of Applicant :Plasticslaan 1 NL 4612PX Bergen op Zoom Netherlands
(72)**Name of Inventor :**
1)DAVIS Michael Scott
2)GALLUCCI Robert Russell
3)LEE Shawn
4)SANNER Mark A.

(57) Abstract :
A sterilized article comprising a sterilized or hydrogen peroxide vapor sterilized polymer composition the polymer composition comprising a polyetherimide wherein after exposure to 100 cycles of the hydrogen peroxide plasma sterilization using a mixture of hydrogen peroxide vapor and hydrogen peroxide plasma for 30 minutes at 20 to 55°C the color of the polymer composition of the article exhibits a color shift of delta E of 10 units or less relative to the color of the polymer composition color before the first hydrogen peroxide plasma sterilization cycle wherein delta E is measured in accordance with ASTM D2244.

No. of Pages : 32 No. of Claims : 22

(12) PATENT APPLICATION PUBLICATION
(19) INDIA
(22) Date of filing of Application :12/11/2013
(21) Application No.9713/DELNP/2013 A
(43) Publication Date : 19/12/2014

(54) Title of the invention : MARKING DEVICE FOR MARKING BALLS, USE OF SUCH A MARKING DEVICE, AND METHOD FOR PROVIDING SUCH A

(51) International classification :B41K1/26,B41K1/28,B41K1/50
(31) Priority Document No :11166084.1
(32) Priority Date :13/05/2011
(33) Name of priority country :EPO
(86) International Application No:PCT/EP2012/058796
Filing Date :11/05/2012
(87) International Publication No :WO 2012/156318
(61) Patent of Addition to Application Number :NA
Filing Date :NA
(62) Divisional to Application Number :NA
Filing Date :NA

(71)**Name of Applicant :**
1)LEHMANN Annette
Address of Applicant :Langensandhhe 9 CH 6005 St. Niklausen Switzerland
2)AMGWERD Luc
3)MAST Markus
4)VAUCHER Vincent
(72)**Name of Inventor :**
1)LEHMANN Annette
2)AMGWERD Luc
3)MAST Markus
4)VAUCHER Vincent

(57) Abstract :
marking device (10) having a housing, a stamp pad (13) and an ink reservoir (15), wherein the ink reservoir (15) has a fluid connection to the stamp pad (13) and the ink reservoir (15) is arranged with the stamp pad (13) in a bottom part (11.1) of the housing. The ink reservoir (15) comprises a reservoir region for accommodating an ink and a zone for accommodating the stamp pad (13), which comprises a plurality of outlet holes. In addition, the ink reservoir (15) comprises a plurality of capillary channels, which extend between the reservoir region and the zone, wherein each capillary channel leads to one of the outlet holes, to provide the fluid connection between ink reservoir (15) and the stamp pad (13).

No. of Pages : 30 No. of Claims : 19

(12) PATENT APPLICATION PUBLICATION
(19) INDIA
(22) Date of filing of Application :12/11/2013
(21) Application No.9714/DELNP/2013 A
(43) Publication Date : 19/12/2014

(54) Title of the invention : AIR SEPARATION POWER GENERATION INTEGRATION

(51) International classification :F25J3/04
(31) Priority Document No :61/490346
(32) Priority Date :26/05/2011
(33) Name of priority country :U.S.A.
(86) International Application No :PCT/US2012/039186
Filing Date :23/05/2012
(87) International Publication No :WO 2012/162417
(61) Patent of Addition to Application Number :NA
Filing Date :NA
(62) Divisional to Application Number :NA
Filing Date :NA

(71)**Name of Applicant :**
1)PRAXAIR TECHNOLOGY INC.
Address of Applicant :39 Old Ridgebury Road Danbury CT 06810 U.S.A.
(72)**Name of Inventor :**
1)PANUCCIO Gregory Joseph
2)DRNEVICH Raymond Francis
3)SHAH Minish Mahendra

(57) Abstract :
The present invention provides a method and apparatus for separating air and generating electrical power. A compressed air stream produced in a main air compressor is introduced into an air separation unit that cryogenically rectifies the air into component products. During turndown conditions of the air separation unit a combustion air stream formed from all or part of the compressed air stream is introduced into a combustor in which a fuel is combusted to produce a heated and pressurized combustion stream. Such stream is introduced to a turbine connected to an electrical generator to generate electrical power. The combustion air stream can be saturated with moisture to increase power output. Further the combustion air stream can also be preheated with an exhaust of a gas turbine.

No. of Pages : 41 No. of Claims : 16

(12) PATENT APPLICATION PUBLICATION
(19) INDIA
(22) Date of filing of Application :12/11/2013
(21) Application No.9715/DELNP/2013 A
(43) Publication Date : 19/12/2014

(54) Title of the invention : RETAINER UNIT AND WIRE BINDING MACHINE COMPRISING SEVERAL SUCH RETAINER UNITS

(51) International classification :B65B13/06,B65B13/22,B65B13/18
(31) Priority Document No :11169754.6
(32) Priority Date :14/06/2011
(33) Name of priority country :EPO
(86) International Application No :PCT/EP2012/059981
Filing Date :29/05/2012
(87) International Publication No :WO 2012/171779
(61) Patent of Addition to Application Number :NA
Filing Date :NA
(62) Divisional to Application Number :NA
Filing Date :NA

(71)**Name of Applicant :**
1)SUND BIRSTA AB
Address of Applicant :Box 994 S 851 25 Sundsvall Sweden
(72)**Name of Inventor :**
1)NILSSON Lennart
2)BIBERG Thomas

(57) Abstract :
A retainer unit (1) for use in a wire binding machine in order to retain and subsequently release a wire during the tightening thereof around one or more objects. The retainer unit comprises: a wire retaining member (10) pivotable under the action of a press force exerted by a wire from an advanced wire retaining position to a retracted wire releasing position; a blocking mechanism (20) moveable from a blocking position in which it prevents the wire retaining member from being pivoted to the wire releasing position to a non blocking position in which it allows the wire retaining member to be pivoted to the wire releasing position. The blocking mechanism is arranged to move to the non blocking position under the effect of said wire when the wire reaches a given inclination towards a wire contacting part (11) of the wire retaining member. The invention also relates to a wire binding machine comprising several such retainer units.

No. of Pages : 33 No. of Claims : 15

(12) PATENT APPLICATION PUBLICATION
(19) INDIA
(22) Date of filing of Application :11/11/2013
(21) Application No.9671/DELNP/2013 A
(43) Publication Date : 19/12/2014

(54) Title of the invention : CEMENT HEAD WITH HAMMER UNION

(51) International classification :E21B33/05,E21B17/08,E21B23/00
(31) Priority Document No :13/109339
(32) Priority Date :17/05/2011
(33) Name of priority country :U.S.A.
(86) International Application No :PCT/CA2012/000472
Filing Date :16/05/2012
(87) International Publication No :WO 2013/003939
(61) Patent of Addition to Application Number :NA
Filing Date :NA
(62) Divisional to Application Number :NA
Filing Date :NA

(71)**Name of Applicant :**
1)KLIMACK HOLDINGS INC.
Address of Applicant :Box 7 Site 210 RR2 Tofield Alberta T0B 4J0 Canada
(72)**Name of Inventor :**
1)KLIMACK Brian K.
2)KLIMACK Jesse
3)FOUILLARD Edmond

(57) Abstract :
A top drive pumpable cement head is provided for cementing a casing into a wellbore comprising a top sub portion with a top drive connection connectable to a top drive shaft to receive cement and impart translational and rotational forces to the casing simultaneously during cementing and a ball launching assembly for housing and launching one or more launching balls. A bottom sub portion comprises a casing sleeve for housing one or more hollow wiper plugs and a tattle tale wire. The cement head also comprises a hammer union. The ball launching assembly is pre loadable with the launching balls the bottom sub is pre loadable with the one or more hollow wiper plugs and a tattle tale wire and the top sub and the bottom sub are connectable via the hammer union for storage prior to cementing operations. A method is also provided for assembling a cement head for completing a casing in a wellbore.

No. of Pages : 32 No. of Claims : 28

(12) PATENT APPLICATION PUBLICATION
(19) INDIA
(22) Date of filing of Application :11/11/2013
(21) Application No.9672/DELNP/2013 A
(43) Publication Date : 19/12/2014

(54) Title of the invention : THIOPHENE AZO CARBOXYLATE DYES AND LAUNDRY CARE COMPOSITIONS CONTAINING THE SAME

(51) International classification :C11D3/40,C09B29/08
(31) Priority Document No :61/492928
(32) Priority Date :03/06/2011
(33) Name of priority country :U.S.A.
(86) International Application No :PCT/US2012/039810
Filing Date :29/05/2012
(87) International Publication No :WO 2012/166699
(61) Patent of Addition to Application Number :NA
Filing Date :NA
(62) Divisional to Application Number :NA
Filing Date :NA

(71)**Name of Applicant :**
1)THE PROCTER & GAMBLE COMPANY
Address of Applicant :One Procter & Gamble Plaza Cincinnati Ohio 45202 U.S.A.
(72)**Name of Inventor :**
1)MIRACLE Gregory Scot
2)TORRES Eduardo
3)BRUHNKE John David
4)DEY Sanjeev Kumar

(57) Abstract :
This application relates to thiophene azo carboxylate dyes for use as hueing agents laundry care compositions comprising such dyes that may serve as hueing agents processes for making such dyes and laundry care compositions and methods of using the same. The aforementioned dyes contain a formally charged moiety and are generally comprised of at least two components: at least one chromophore component and at least one polymeric component. Suitable chromophore components generally fluoresce blue red violet or purple color when exposed to ultraviolet light or they may absorb light to reflect these same shades. Such dyes are advantageous in providing a hueing effect for example a whitening effect to fabrics while not building up over time and causing undesirable blue discoloration to the treated fabrics. Such dyes are also generally stable to bleaching agents used in laundry care compositions.

No. of Pages : 106 No. of Claims : 16

(12) PATENT APPLICATION PUBLICATION
(19) INDIA
(22) Date of filing of Application :11/11/2013
(21) Application No.9673/DELNP/2013 A
(43) Publication Date : 19/12/2014

(54) Title of the invention : DEVICE FOR GUIDING AIR FOR THE FRONT PORTION OF A MOTOR VEHICLE

(51) International classification :B60K11/08
(31) Priority Document No :1153294
(32) Priority Date :15/04/2011
(33) Name of priority country :France
(86) International Application No :PCT/EP2012/054478
Filing Date :14/03/2012
(87) International Publication No :WO 2012/139848
(61) Patent of Addition to Application Number :NA
Filing Date :NA
(62) Divisional to Application Number :NA
Filing Date :NA

(71)**Name of Applicant :**
1)RENAULT SAS
Address of Applicant :13 15 Quai le Gallo F 92100 Boulogne Billancourt France
(72)**Name of Inventor :**
1)DO NASCIMENTO Silvino
2)PEROT Patrick

(57) Abstract :
The invention relates to a device (10) for guiding air, which forms a sealed surface capable of extending from a front surface (1) of a motor vehicle up to a radiator positioned in the front portion of the motor vehicle, the device including a first portion (16) for guiding the air toward the radiator and a lip (17) hinged onto said first portion (16), including a free end (19) capable of engaging with the radiator (6), characterized in that the lip (17) extends forward from the connection area (18) to the first portion (16), the free end (19) thereof therefore being located in front of the connection area (18).

No. of Pages : 18 No. of Claims : 14

(12) PATENT APPLICATION PUBLICATION
(19) INDIA
(22) Date of filing of Application :11/11/2013
(21) Application No.9674/DELNP/2013 A
(43) Publication Date : 19/12/2014

(54) Title of the invention : MANUFACTURING METHOD FOR UNIDIRECTIONAL ELECTROMAGNETIC STEEL SHEET

(51) International classification :C21D8/12,H01F1/16,C22C38/00
(31) Priority Document No :NA
(32) Priority Date :NA
(33) Name of priority country :NA
(86) International Application No :PCT/JP2011/063475
Filing Date :13/06/2011
(87) International Publication No :WO 2012/172624
(61) Patent of Addition to Application Number :NA
Filing Date :NA
(62) Divisional to Application Number :NA
Filing Date :NA

(71)**Name of Applicant :**
1)NIPPON STEEL & SUMITOMO METAL CORPORATION
Address of Applicant :6 1 Marunouchi 2 chome Chiyoda ku Tokyo 1008071 Japan
(72)**Name of Inventor :**
1)SAKAI Tatsuhiko
2)HAMAMURA Hideyuki

(57) Abstract :
The present invention has the iohowmg steps: a final an C nealing step (S07) for annealing i n a batch furnace a steel sheet (ferrite) I wound into a coil, and forming a glass coating on the surface of the steel S01 sheet (ferrite); an insulating iilm forming step (S08) for, after the final annealing step (S07), forming an insulating film on top o f the glass coat □ing; and a laser irradiation step (S09) for irradiating the insulating film □S02 fiom above with a laser beam, and for controlling the magnetic domain. □I n the laser irradiation step (S09), a laser beam i s shone onto a surface f a cing the radial exterior side of the coil at the time o f the final annealing step (S07).

No. of Pages : 20 No. of Claims : 1

(12) PATENT APPLICATION PUBLICATION
(19) INDIA
(22) Date of filing of Application :08/11/2013
(21) Application No.9625/DELNP/2013 A
(43) Publication Date : 19/12/2014

(54) Title of the invention : WATER PURIFICATION DEVICE

(51) International classification :C02F1/00,B01D24/14,B01D61/14
(31) Priority Document No :NA
(32) Priority Date :NA
(33) Name of priority country :NA
(86) International Application No :PCT/DK2011/050132
Filing Date :27/04/2011
(87) International Publication No :WO 2012/146243
(61) Patent of Addition to Application Number :NA
Filing Date :NA
(62) Divisional to Application Number :NA
Filing Date :NA

(71)**Name of Applicant :**
1)LIFESTRAW SA
Address of Applicant :Chemin Messidor 5 7 c/o Vestergaard Frandsen SA CH 1006 Lausanne Switzerland
(72)**Name of Inventor :**
1)VESTERGAARD FRANDSEN Mikkel
2)FRAUCHIGER Daniel
3)MADIER DE CHAMPVERMEIL Jean Luc
4)PASCAL Jean Marc
5)STOOPS Luc

(57) Abstract :
A device (1) for purification of water driven by gravity through a purification unit be tween an upper dirt water container (2) and a lower clean water tank (3) that may be sealed against the environment for preventing contamination. The device may also be provided a vent tube (12) for venting of air from the upstream side of a membrane in the purification unit. Advantageously the tube (12) extends upwards to the upper edge of the dirt water container (2). Also a backwash system may be integrated the system comprising a receptacle (8) for accumulation of the backwash water to prevent consumption thereof by mistake.

No. of Pages : 55 No. of Claims : 34

(12) PATENT APPLICATION PUBLICATION
(19) INDIA
(22) Date of filing of Application :12/11/2013
(21) Application No.9720/DELNP/2013 A
(43) Publication Date : 19/12/2014

(54) Title of the invention : THERMOPLASTIC ELASTOMERS MOLDABLE UNDER LOW SHEAR CONDITIONS

(51) International classification :C08L53/00,C08L25/14,C08L23/00
(31) Priority Document No :61/489814
(32) Priority Date :25/05/2011
(33) Name of priority country :U.S.A.
(86) International Application No :PCT/US2012/038929
Filing Date :22/05/2012
(87) International Publication No :WO 2012/162285
(61) Patent of Addition to Application Number :NA
Filing Date :NA
(62) Divisional to Application Number :NA
Filing Date :NA

(71)**Name of Applicant :**
1)POLYONE CORPORATION
Address of Applicant :33587 Walker Road Avon Lake Ohio 44012 U.S.A.
(72)**Name of Inventor :**
1)MEYER Gerald
2)PEPE William

(57) Abstract :
A thermoplastic elastomer compound of an acrylic containing styrenic block copolymer and plasticizer oil have been found to be capable of sintering at a temperature ranging from about 180C to about 200C when the copolymer and the oil are in no more than a 2:1 weight ratio. The compound can be used in rotomolding or slush molding equipment to make plastic articles having elastomeric properties.

No. of Pages : 20 No. of Claims : 8

(12) PATENT APPLICATION PUBLICATION
(19) INDIA
(22) Date of filing of Application :12/11/2013
(21) Application No.9721/DELNP/2013 A
(43) Publication Date : 19/12/2014

(54) Title of the invention : MANUFACTURING METHOD AND PRODUCT

(51) International classification :B29C45/16
(31) Priority Document No :1107931.6
(32) Priority Date :12/05/2011
(33) Name of priority country :U.K.
(86) International Application No :PCT/GB2012/051061
Filing Date :11/05/2012
(87) International Publication No :WO 2012/153149
(61) Patent of Addition to Application Number :NA
Filing Date :NA
(62) Divisional to Application Number :NA
Filing Date :NA

(71)**Name of Applicant :**
1)DEPUY (IRELAND)
Address of Applicant :Loughbeg Ringaskiddy County Cork Ireland
2)ACCELLENT INC.
(72)**Name of Inventor :**
1)ASSELIN Henri
2)REEVE Michael
3)BEAUPRE Todd

(57) Abstract :
A method of manufacturing a surgical instrument or prosthesis and an injection moulded surgical instrument or prosthesis are described. A first material is injected into a first mould to form an interim component. A second material is injected into a second mould containing at least part of the interim component to form the surgical instrument or prosthesis such that portions of the first and second materials are exposed at the external surface of the surgical instrument or prosthesis. The first and second materials are visually distinct such that at least one exposed portion of the first or second material adjacent to an exposed portion of the other material forms a marking which is visible to a user.

No. of Pages : 20 No. of Claims : 17

(12) PATENT APPLICATION PUBLICATION
(19) INDIA
(22) Date of filing of Application :12/11/2013
(21) Application No.9722/DELNP/2013 A
(43) Publication Date : 19/12/2014

(54) Title of the invention : NH3 OXIDIZER GAS DISTRIBUTOR

(51) International classification :B01J19/24,B01J12/00,B01J23/75
(31) Priority Document No :13/164194
(32) Priority Date :20/06/2011
(33) Name of priority country :U.S.A.
(86) International Application No :PCT/US2012/042870
Filing Date :18/06/2012
(87) International Publication No :WO 2012/177532
(61) Patent of Addition to Application Number :NA
Filing Date :NA
(62) Divisional to Application Number :NA
Filing Date :NA

(71)**Name of Applicant :**
1)HONEYWELL INTERNATIONAL INC.
Address of Applicant :Patent Services M/S AB/2B 101 Columbia Road P.O. Box 2245 Morristown New Jersey 07962 2245 U.S.A.
(72)**Name of Inventor :**
1)GUO Jing
2)WARREN Matthew

(57) Abstract :
Ammonia oxidizers are disclosed that can include gas distributors and distribution rings to improve the distribution of the flow of a gas feedstream across a catalyst bed in the ammonia oxidizer. The gas distributors include circular plates that have holes through which the gas feedstream is distributed across the catalyst bed. In some examples the gas distributors also have a sidewall. The distribution rings are attached to the inner wall of the ammonia oxidizer at a predetermined distance below the gas distributor.

No. of Pages : 18 No. of Claims : 10

(12) PATENT APPLICATION PUBLICATION
(19) INDIA
(22) Date of filing of Application :12/11/2013
(21) Application No.9723/DELNP/2013 A
(43) Publication Date : 19/12/2014

(54) Title of the invention : PROCESS OF REACTIVE TRITURATION DIRECTLY ON AN OIL CAKE

(51) International classification :C11B1/04,C11C3/00,A23K1/14
(31) Priority Document No :11.54554
(32) Priority Date :25/05/2011
(33) Name of priority country :France
(86) International Application No :PCT/FR2012/051159
Filing Date :23/05/2012
(87) International Publication No :WO 2012/160314
(61) Patent of Addition to Application Number :NA
Filing Date :NA
(62) Divisional to Application Number :NA
Filing Date :NA

(71)**Name of Applicant :**
1)ARKEMA FRANCE
Address of Applicant :420 rue dEstienne dOrves F 92700 Colombes France
(72)**Name of Inventor :**
1)DUBOIS Jean Luc
2)PICCIRILLI Antoine

(57) Abstract :
The present invention relates to a process comprising at least one reactive trituration step which consists in placing an oil cake comprising from 3% to 30% oil in contact with an anhydrous light alcohol and an alkaline catalyst under temperature and time conditions that are sufficient to allow the extraction and transesterification of the plant oil and leading to the production of a mixture comprising fatty acid esters and glycerol, and a de-oiled cake comprising less than 3% oil. The present invention also relates to a detoxified de-oiled cake, and also to a mixture of fatty acid esters with improved stability and improved resistance to oxidation.

No. of Pages : 24 No. of Claims : 20

(12) PATENT APPLICATION PUBLICATION
(19) INDIA
(22) Date of filing of Application :11/11/2013
(21) Application No.9675/DELNP/2013 A
(43) Publication Date : 19/12/2014

(54) Title of the invention : USB CABLE ANTENNA

(51) International classification :H01Q1/46
(31) Priority Document No :2011111163
(32) Priority Date :18/05/2011
(33) Name of priority country :Japan
(86) International Application No :PCT/JP2012/059885
Filing Date :11/04/2012
(87) International Publication No :WO 2012/157377
(61) Patent of Addition to Application Number :NA
Filing Date :NA
(62) Divisional to Application Number :NA
Filing Date :NA

(71)**Name of Applicant :**
1)SONY CORPORATION
Address of Applicant :1 7 1 Konan Minato ku Tokyo 1080075 Japan
(72)**Name of Inventor :**
1)YOSHINO Yoshitaka
2)TSUBOI Satoru

(57) Abstract :
There is provided a USB cable antenna which also uses a USB cable s lunt/ OHIl antenna that receives a high-frequency signal in a desired band, by connecting a metal shield of the USB cable to an ID terminal of a USB connector connected to the 5 USB cable of a predetermined length connected to an information terminal device, connecting a high-frequency cutoff element having a high impedance for the highfrequency signal in the desired band to both ends of a power supply line and a ground line of the USB cable, and connecting a common mode choke having the high impedance for the high-frequency signal in the desired band to both ends of a 10 transmission line of a differential signal of the USB cable.

No. of Pages : 37 No. of Claims : 6

(12) PATENT APPLICATION PUBLICATION
(19) INDIA
(22) Date of filing of Application :12/11/2013
(21) Application No.9728/DELNP/2013 A
(43) Publication Date : 19/12/2014

(54) Title of the invention : ERGONOMIC MOTION DETECTION FOR RECEIVING CHARACTER INPUT TO ELECTRONIC DEVICES

(51) International classification :G06F3/048
(31) Priority Document No :13/091158
(32) Priority Date :21/04/2011
(33) Name of priority country :U.S.A.
(86) International Application No :PCT/IL2012/050153
Filing Date :19/04/2012
(87) International Publication No :WO 2012/143929
(61) Patent of Addition to Application Number :NA
Filing Date :NA
(62) Divisional to Application Number :NA
Filing Date :NA

(71)**Name of Applicant :**
1)INPRIS INNOVATIVE PRODUCTS FROM ISRAEL LTD.
Address of Applicant :24 Tirosh St. Efrat 9043500 Israel
(72)**Name of Inventor :**
1)YARON Nissan
2)YARON Ben Etzion

(57) Abstract :
The invention provides a touch screen assembly for a user to enter characters into an electronic device the touch screen assembly comprising: a processor; a touch screen having a touch sensitive surface; and a memory storing instructions that when executed by the processor cause the processor to maintain multiple repositionable finger contact regions on the touch sensitive surface as described in detail herein. The processor uses the association of characters to finger contacts to recognize character input based on the indicated regions of finger contacts and the indications of sliding/non sliding contact. Also provided is a method of analyzing human gestures to recognize character input to an electronic device; and a machine readable storage medium storing instructions for executing the method of the invention.

No. of Pages : 29 No. of Claims : 20

(12) PATENT APPLICATION PUBLICATION
(19) INDIA
(22) Date of filing of Application :12/11/2013
(21) Application No.9729/DELNP/2013 A
(43) Publication Date : 19/12/2014

(54) Title of the invention : ROLLING BEARING ARRANGEMENT OF A SHAFT OF AN EXHAUST GAS TURBOCHARGER

(51) International classification	:F02B39/00,F02B39/14,F01D25/16
(31) Priority Document No	:102011109758.2
(32) Priority Date	:09/08/2011
(33) Name of priority country	:Germany
(86) International Application No	:PCT/US2012/049251
Filing Date	:02/08/2012
(87) International Publication No	:WO 2013/022684
(61) Patent of Addition to Application Number	:NA
Filing Date	:NA
(62) Divisional to Application Number	:NA
Filing Date	:NA

(71)**Name of Applicant :**
1)BORGWARNER INC.
Address of Applicant :Patent Department 3850 Hamlin Road Auburn Hills Michigan 48326 U.S.A.
(72)**Name of Inventor :**
1)ZEPPEI Dieter

(57) Abstract :
The present invention relates to a rolling bearing arrangement (1) of a shaft (2) of an exhaust gas turbocharger (3) having two spaced apart rolling bearings (4 5) the inner rings (6 7) of which are arranged on the shaft (2) and between which (6 7) is arranged a spacer (8) and the outer rings (9 10) of which are seated in a bearing bushing (12) which is fastened in a bearing housing (11); and having an oil supply device (13) arranged in the bearing housing (11) which oil supply device is flow connected to an oil supply duct (14A 14B) which is arranged in the bearing bushing (12) and which opens into an annular chamber (15) wherein a check valve (16) is arranged in the oil supply duct (14A 14B).

No. of Pages : 11 No. of Claims : 6

(12) PATENT APPLICATION PUBLICATION
(19) INDIA
(22) Date of filing of Application :12/11/2013
(21) Application No.9730/DELNP/2013 A
(43) Publication Date : 19/12/2014

(54) Title of the invention : BEARING HOUSING OF AN EXHAUST GAS TURBOCHARGER

(51) International classification :F02B39/00,F01D25/16,F02B39/14
(31) Priority Document No :10 2011 110 823.1
(32) Priority Date :16/08/2011
(33) Name of priority country :Germany
(86) International Application No :PCT/US2012/049701
Filing Date :06/08/2012
(87) International Publication No :WO 2013/025386
(61) Patent of Addition to Application Number :NA
Filing Date :NA
(62) Divisional to Application Number :NA
Filing Date :NA

(71)**Name of Applicant :**
1)BORGWARNER INC.
Address of Applicant :Patent Department 3850 Hamlin Road Auburn Hills Michigan 48326 U.S.A.
(72)**Name of Inventor :**
1)KOERNER Thomas
2)KOENIG Lothar
3)PASSEMARD William

(57) Abstract :
The present invention relates to a bearing housing (1) of an exhaust gas turbocharger (2) having an oil inlet (3) which is connected to a connecting region (4) of an oil supply line (5) wherein the connecting region (4) of the oil supply line (5) is in the form of a siphon (6).

No. of Pages : 10 No. of Claims : 6

(12) PATENT APPLICATION PUBLICATION
(19) INDIA
(22) Date of filing of Application :12/11/2013
(21) Application No.9731/DELNP/2013 A
(43) Publication Date : 19/12/2014

(54) Title of the invention : BEARING ARRANGEMENT

(51) International classification :F16C32/06,F16C27/02,F16C17/10
(31) Priority Document No :102011111699.4
(32) Priority Date :24/08/2011
(33) Name of priority country :Germany
(86) International Application No :PCT/US2012/051319
Filing Date :17/08/2012
(87) International Publication No :WO 2013/028507
(61) Patent of Addition to Application Number :NA
Filing Date :NA
(62) Divisional to Application Number :NA
Filing Date :NA

(71)**Name of Applicant :**
1)BORGWARNER INC.
Address of Applicant :Patent Department 3850 Hamlin Road Auburn Hills Michigan 48326 U.S.A.
(72)**Name of Inventor :**
1)METZ Dietmar
2)MUELLER Martin

(57) Abstract :
The present invention relates to a bearing arrangement (28) having at least one radial air bearing (1) and/or having an axial air bearing (15) wherein the radial air bearing (1) has an inner annular bearing plate (7) and a spring plate (10) which surrounds the bearing plate (7) at the outside said bearing plate and spring plate being formed as a single piece component.

No. of Pages : 22 No. of Claims : 20

(12) PATENT APPLICATION PUBLICATION
(19) INDIA
(22) Date of filing of Application :12/11/2013
(21) Application No.9716/DELNP/2013 A
(43) Publication Date : 19/12/2014

(54) Title of the invention : MEASURING SKELETAL DISTRACTION

(51) International classification :A61B17/56,A61B17/66,A61B17/72
(31) Priority Document No :61/486483
(32) Priority Date :16/05/2011
(33) Name of priority country:U.S.A.
(86) International Application No :PCT/US2012/032340
Filing Date :05/04/2012
(87) International Publication No :WO 2012/158273
(61) Patent of Addition to Application Number :NA
Filing Date :NA
(62) Divisional to Application Number :NA
Filing Date :NA

(71)**Name of Applicant :**
1)SMITH & NEPHEW INC.
Address of Applicant :1450 Brooks Road Memphis Tennessee 38116 U.S.A.
(72)**Name of Inventor :**
1)WILHELM Hoa La
2)AUSTIN Gene Edward

(57) Abstract :
In one aspect a method includes transmitting an interrogation signal. A first signal transmitted in response to the interrogation signal is detected the first signal being transmitted by a first transponder arranged to move with a first bone fragment. A second signal transmitted in response to the interrogation signal is detected the second signal being transmitted by a second transponder arranged to move with a second bone fragment. A distance between the bone fragments is determined using the detected signals.

No. of Pages : 43 No. of Claims : 35

(12) PATENT APPLICATION PUBLICATION
(19) INDIA
(22) Date of filing of Application :12/11/2013
(21) Application No.9717/DELNP/2013 A
(43) Publication Date : 19/12/2014

(54) Title of the invention : TISSUE HEALING

(51) International classification :A61F13/02
(31) Priority Document No :1108229.4
(32) Priority Date :17/05/2011
(33) Name of priority country :U.K.
(86) International Application No :PCT/GB2011/001553
Filing Date :02/11/2011
(87) International Publication No :WO 2012/156655
(61) Patent of Addition to Application Number :NA
Filing Date :NA
(62) Divisional to Application Number :NA
Filing Date :NA

(71)**Name of Applicant :**
1)SMITH & NEPHEW PLC
Address of Applicant :15 Adam Street London WC2N 6LA U.K.
(72)**Name of Inventor :**
1)HARTWELL Samantha Dawn
2)HUDSON Donald Anthony

(57) Abstract :
A system method and apparatus are disclosed for dressing a wound and for minimizing scarring. The apparatus promotes scar minimizing healing of a wound where negative pressure wound therapy is applied and comprises a wound contact layer containing silicone polysiloxanes or other related compounds.

No. of Pages : 45 No. of Claims : 40

(12) PATENT APPLICATION PUBLICATION
(19) INDIA
(22) Date of filing of Application :12/11/2013
(21) Application No.9718/DELNP/2013 A
(43) Publication Date : 19/12/2014

(54) Title of the invention : WOUND DEBRIDEMENT COMPOSITIONS CONTAINING SEAPROSE AND METHODS OF WOUND TREATMENT USING SAME

(51) International classification	:A61K38/48,A61K9/00,A61P17/02
(31) Priority Document No	:61/485503
(32) Priority Date	:12/05/2011
(33) Name of priority country	:U.S.A.
(86) International Application No	:PCT/US2012/037480
Filing Date	:11/05/2012
(87) International Publication No	:WO 2012/155027
(61) Patent of Addition to Application Number	:NA
Filing Date	:NA
(62) Divisional to Application Number	:NA
Filing Date	:NA

(71)**Name of Applicant :**
1)HEALTHPOINT LTD.
Address of Applicant :3909 Hulen St. Fort Worth TX 76107 U.S.A.
(72)**Name of Inventor :**
1)SHI Lei
2)JOVANOVIC Aleksa
3)CARSON Dennis

(57) Abstract :
Wound debridement compositions containing the proteolytic enzyme Seaprose and use of such compositions in wound treatment for the enzymatic debridement of wounds.

No. of Pages : 23 No. of Claims : 33

(12) PATENT APPLICATION PUBLICATION
(19) INDIA
(22) Date of filing of Application :12/11/2013
(21) Application No.9719/DELNP/2013 A
(43) Publication Date : 19/12/2014

(54) Title of the invention : FORMULATION FOR ANTI A47 ANTIBODY

(51) International classification :A61K39/395,A61K47/12,A61K47/14
(31) Priority Document No :61/481522
(32) Priority Date :02/05/2011
(33) Name of priority country :U.S.A.
(86) International Application No :PCT/US2012/036069
Filing Date :02/05/2012
(87) International Publication No :WO 2012/151247
(61) Patent of Addition to Application Number :NA
Filing Date :NA
(62) Divisional to Application Number :NA
Filing Date :NA

(71)**Name of Applicant :**
1)MILLENNIUM PHARMACEUTICALS INC.
Address of Applicant :40 Landsdowne Street Cambridge Massachusetts 02139 U.S.A.
(72)**Name of Inventor :**
1)DILUZIO Willow
2)NGUYEN Phuong M.
3)VARGA Csanad M.
4)PALANIAPPAN Vaithianathan
5)BROWN Jason
6)FOX Irving H.
7)SCHOLZ Catherine
8)JENKINS Helen
9)ROSARIO Maria

(57) Abstract :
Antibody formulations are described comprising a mixture of an anti a47 antibody an antioxidant or chelator and at least one free amino acid. The disclosed formulations may have improved stability reduced aggregate formation or both. The present invention further provides a safe dosing regimen of these antibody formulations that is easy to follow and which results in a therapeutically effective amount of the anti a47 antibody in vivo.

No. of Pages : 160 No. of Claims : 63

(12) PATENT APPLICATION PUBLICATION
(19) INDIA
(22) Date of filing of Application :12/11/2013
(21) Application No.9735/DELNP/2013 A
(43) Publication Date : 19/12/2014

(54) Title of the invention : METHOD TO DETERMINE A PIXON MAP IN ITERATIVE IMAGE RECONSTRUCTION

(51) International classification :G06K9/40
(31) Priority Document No :61/476012
(32) Priority Date :15/04/2011
(33) Name of priority country :U.S.A.
(86) International Application No :PCT/US2012/033852
Filing Date :16/04/2012
(87) International Publication No :WO 2012/142624
(61) Patent of Addition to Application Number :NA
Filing Date :NA
(62) Divisional to Application Number :NA
Filing Date :NA

(71)**Name of Applicant :**
1)IMAGERECON LLC
Address of Applicant :11 Night Heron Drive Stony Brook New York 11790 U.S.A.
(72)**Name of Inventor :**
1)YAHIL Amos

(57) Abstract :
A method for iterative reconstruction of a signal containing noise using the pixon method determines the pixon map from a variable that is used to update the image in the iteration. The updating variable is based on an optimized merit function and smoothes the updating variable during the iteration. The updated image can optionally also be further smoothed at the end of the iteration using the pixon map determined during the iteration.

No. of Pages : 49 No. of Claims : 21

(12) PATENT APPLICATION PUBLICATION
(19) INDIA
(22) Date of filing of Application :12/11/2013
(21) Application No.9736/DELNP/2013 A
(43) Publication Date : 19/12/2014

(54) Title of the invention : FOOD PACKAGE

(51) International classification :B65D77/22,B65D81/34
(31) Priority Document No :11172853.1
(32) Priority Date :06/07/2011
(33) Name of priority country :EPO
(86) International Application No :PCT/EP2012/062565
Filing Date :28/06/2012
(87) International Publication No :WO 2013/004586
(61) Patent of Addition to Application Number :NA
Filing Date :NA
(62) Divisional to Application Number :NA
Filing Date :NA

(71)**Name of Applicant :**
1)MICVAC AB
Address of Applicant :Fljelbergsgatan 10 S 431 37 Mlndal Sweden
(72)**Name of Inventor :**
1)HAAMER Joel
2)GUSTAVSSON Martin

(57) Abstract :
The present invention relates to a food package for cooking storing and heating of ready to eat food. The food package comprises a food container (65) a plastic film (26) for sealing the food package from ambient air and being provided with an opening (16) said food package further comprising an openable and resealable valve membrane (52 62) of a therrmoelastic material covering said opening wherein an adhesion between the valve membrane (52 62) and the surface it is applied on is lower in a first area (160) than in a second area wherein said first area (160) extends in a direction at least between said opening (16) of said plastic film and an edge of said valve membrane (52 62) such that a canal (60) may be created between said opening (16) and a valve membrane periphery during cooking and/or heating of said ready to eat food wherein the valve membrane has a production machine direction (8) of the thermoelastic material which has a relationship to said direction of said first area such that an angle therebetween is within an interval of 60° to 90°.

No. of Pages : 27 No. of Claims : 14

(12) PATENT APPLICATION PUBLICATION
(19) INDIA
(22) Date of filing of Application :08/11/2013
(21) Application No.9641/DELNP/2013 A
(43) Publication Date : 19/12/2014

(54) Title of the invention : INSECTICIDAL COMPOUNDS

(51) International classification :C07D261/02,C07D327/02,A01N43/80
(31) Priority Document No :11168217.5
(32) Priority Date :31/05/2011
(33) Name of priority country :EPO
(86) International Application No :PCT/EP2012/060125
Filing Date :30/05/2012
(87) International Publication No :WO 2012/163959
(61) Patent of Addition to Application Number :NA
Filing Date :NA
(62) Divisional to Application Number :NA
Filing Date :NA

(71)**Name of Applicant :**
1)SYNGENTA PARTICIPATIONS AG
Address of Applicant :Schwarzwaldallee 215 CH 4058 Basel Switzerland
(72)**Name of Inventor :**
1)CASSAYRE Jr´me Yves
2)RENOLD Peter
3)EL QACEMI Myriem
4)PITTERNA Thomas
5)TOUEG Julie Clementine

(57) Abstract :
The present invention provides compounds of formula (I): wherein A A A and A are independently of one another C H C R or nitrogen; B B B B is CH C=N CH CH N CH CH CH C=CH 0 or CH=C CH 0 ; G is oxygen or sulfur; L is a single bond or C Calkylene; R is hydrogen C Calkyl C Calkylcarbonyl C Calkoxy C Calkenyl C Calkynyl C Calkoxy C Calkyl aryl or aryl substituted by one to three R or R is heterocyclyl or heterocyclyl substituted by one to three R or C Calkoxycarbonyl ; R is hydrogen C Chaloalkyl or C Calkyl; R is C Chaloalkyl; R is aryl or aryl substituted by one to three R or R is heterocyclyl or heterocyclyl substituted by one to three R; Y is CRR C=O or C=S; Y Y and Y are independently CRR C=0 C=S N R O S SO or SO; wherein at least two adjacent ring atoms in the ring formed by Y Y Y and Y are heteroatoms; each R and R is independently hydrogen halogen C Calkyl or C Chaloalkyl; and R R R Rand R are as defined in the claims. The invention also relates to processes and intermediates for preparing these compounds to insecticidal acaricidal nematicidal and molluscicidal compositions comprising these compounds and to methods of using these compounds to control insect acarine nematode and mollusc pests.

No. of Pages : 136 No. of Claims : 15

(12) PATENT APPLICATION PUBLICATION
(19) INDIA
(22) Date of filing of Application :08/11/2013
(21) Application No.9642/DELNP/2013 A
(43) Publication Date : 19/12/2014

(54) Title of the invention : MODIFIED RELEASE OF 4 METHYL 3 [[4 (3 PYRIDINYL) 2 PYRIMIDINYL]AMINO] N 5 (4 METHYL 1H IMIDAZOL 1 YL) 3 (TRIFLUOROMETHYL)PHENYL] BENZAMIDE SOLUBILIZED USING ORGANIC ACIDS

(51) International classification :C07D401/14,A61K31/506,A61P35/00
(31) Priority Document No :61/496913
(32) Priority Date :14/06/2011
(33) Name of priority country :U.S.A.
(86) International Application No :PCT/US2012/042205
Filing Date :13/06/2012
(87) International Publication No :WO 2012/174082
(61) Patent of Addition to Application Number :NA
Filing Date :NA
(62) Divisional to Application Number :NA
Filing Date :NA

(71)**Name of Applicant :**
1)NOVARTIS AG
Address of Applicant :Lichstrasse 35 CH 4056 Basel Switzerland
(72)**Name of Inventor :**
1)LI Shoufeng
2)KUMAR Saran
3)KAVIMANDAN Nikhil Javant
4)LU Enxian

(57) Abstract :
Soluble pharmaceutical compositions of amorphous nilotinib or a pharmaceutically acceptable salt thereof were invented using one or more organic acids that function as a solubilizing agent increasing the bioavailability of nilotinib and supressing the food effect associated with certain compositions of nilotinib. The pharmaceutical compositions are in th form of solid oral dosage forms including capsules and tablets.

No. of Pages : 36 No. of Claims : 33

(12) PATENT APPLICATION PUBLICATION
(19) INDIA
(22) Date of filing of Application :08/11/2013
(21) Application No.9643/DELNP/2013 A
(43) Publication Date : 19/12/2014

(54) Title of the invention : PESTICIDAL MIXTURES COMPRISING ISOXAZOLINE DERIVATIVES

(51) International classification :A01N43/54,A01N43/80,A01N43/653
(31) Priority Document No :11168220.9
(32) Priority Date :31/05/2011
(33) Name of priority country :EPO
(86) International Application No :PCT/EP2012/060103
Filing Date :30/05/2012
(87) International Publication No :WO 2012/163945
(61) Patent of Addition to Application Number :NA
Filing Date :NA
(62) Divisional to Application Number :NA
Filing Date :NA

(71)**Name of Applicant :**
1)SYNGENTA PARTICIPATIONS AG
Address of Applicant :Schwarzwaldallee 215 CH 4058 Basel Switzerland
(72)**Name of Inventor :**
1)CASSAYRE Jr´me Yves
2)EL QACEMI Myriem

(57) Abstract :
The present invention relates to pesticidal mixtures comprising a component A and a component B wherein component A is a compound of formula (I) wherein A A L p R R R R and R are as defined in claim 1 and component B is a fungicide. The present invention also relates to methods of using said mixtues for the control of plant pests.

No. of Pages : 60 No. of Claims : 14

(12) PATENT APPLICATION PUBLICATION
(19) INDIA
(22) Date of filing of Application :08/11/2013
(21) Application No.9645/DELNP/2013 A
(43) Publication Date : 19/12/2014

(54) Title of the invention : MUSCLE BUILDING IMPLEMENT AND METHOD OF CONTROLLING SAME

(51) International classification :A63B21/02
(31) Priority Document No :2011251493
(32) Priority Date :17/11/2011
(33) Name of priority country :Japan
(86) International Application No :PCT/JP2012/054756
Filing Date :27/02/2012
(87) International Publication No :WO 2013/073205
(61) Patent of Addition to Application Number :NA
Filing Date :NA
(62) Divisional to Application Number :NA
Filing Date :NA

(71)**Name of Applicant :**
1)SATO Yoshiaki
Address of Applicant :2 4 1 Hachiman cho Fuchu shi Tokyo 1830016 Japan
(72)**Name of Inventor :**
1)SATO Yoshiaki

(57) Abstract :
A muscle building tool 1 is used to build, by applying a predetermined pressure to at least one of a users four limbs to restrict blood flow, a muscle of the limb, and includes: a belt 10 that is wrapped around the at least one of the four limbs and applies the pressure to the muscle; a 10 fastener 40 that maintains a loop shape of the belt 10 in a state of applying the pressure to the muscle; a tension sensor 60 that measures a tension acting on the belt 10 when wrapping the belt 10; and a pressure sensor that is configured to automatically start an operation when the 15 tension measured by the tension sensor 60 exceeds a predetermined threshold, and measures the pressure applied to the muscle.

No. of Pages : 56 No. of Claims : 25

(12) PATENT APPLICATION PUBLICATION
(19) INDIA
(22) Date of filing of Application :12/11/2013
(21) Application No.9732/DELNP/2013 A
(43) Publication Date : 19/12/2014

(54) Title of the invention : AIR FEED DEVICE FOR A FUEL CELL

(51) International classification :H01M8/04,F04D29/26
(31) Priority Document No :102011111576.9
(32) Priority Date :24/08/2011
(33) Name of priority country :Germany
(86) International Application No :PCT/US2012/051352
Filing Date :17/08/2012
(87) International Publication No :WO 2013/028521
(61) Patent of Addition to Application Number :NA
Filing Date :NA
(62) Divisional to Application Number :NA
Filing Date :NA

(71)**Name of Applicant :**
1)BORGWARNER INC.
Address of Applicant :Patent Department 3850 Hamlin Road Auburn Hills MI 48326 U.S.A.
(72)**Name of Inventor :**
1)METZ Dietmar
2)MUELLER Martin
3)SEKULARAC Aleksandar

(57) Abstract :
An air feed device (1) for a fuel cell having a shaft (2); having a compressor wheel (4) which is arranged in a compressor housing (3) and which is fastened to one end (5) of the ends (5 20) of the shaft (2) having a bearing arrangement (6 7 8) which is arranged in a bearing housing (9) for mounting the shaft (2) and having an electric motor (10) for driving the shaft (2) which electric motor is arranged in the bearing housing (9) wherein the shaft (2) has two shaft bearing portions (11 12) which are formed as separate components and has a magnet portion (13) which is arranged between the shaft bearing portions (11 12) forms a separate component and forms the rotor of the electric motor (10) the shaft bearing portions (11 12) and the magnet portion (13) being braced against one another and wherein the shaft bearing portions (11 12) and the magnet portion (13) are centered relative to one another by means of a centering arrangement (12A 13F) which engages on an outer edge (A) the shaft bearing portions (11 12) and the magnet portion (13) bearing in each case axially against one another.

No. of Pages : 17 No. of Claims : 17

(12) PATENT APPLICATION PUBLICATION
(19) INDIA
(22) Date of filing of Application :12/11/2013
(21) Application No.9733/DELNP/2013 A
(43) Publication Date : 19/12/2014

(54) Title of the invention : MAINTENANCE FREE SLIDE BEARING WITH FEP OR PFA IN THE ADHESIVE LAYER

(51) International classification	:F16C33/20,F16C33/04,C09D127/18
(31) Priority Document No	:61/480825
(32) Priority Date	:29/04/2011
(33) Name of priority country	:U.S.A.
(86) International Application No	:PCT/US2012/035621
Filing Date	:27/04/2012
(87) International Publication No	:WO 2012/149447
(61) Patent of Addition to Application Number	:NA
Filing Date	:NA
(62) Divisional to Application Number	:NA
Filing Date	:NA

(71)**Name of Applicant :**
1)SAINT GOBAIN PERFORMANCE PLASTICS CORPORATION
Address of Applicant :1199 South Chillicothe Road Aurora Ohio 44202 U.S.A.
(72)**Name of Inventor :**
1)ZIEGLER Julia
2)SCHMITJES Olaf
3)HELDMANN Joerg

(57) Abstract :
Slide bearings and methods of producing slide bearings are disclosed. The slide bearing has a metal support an adhesive layer and a sliding layer. The adhesive layer is applied directly to the metal support. The adhesive layer comprises a blend of at least two fluoropolymers P1 and P2 wherein P1 is selected from perfluoroalkoxyethylene (PFA) or tetrafluoroethylene hexafluoropropylene (FEP). P2 is different from P1 and can be a fluoropolymer.

No. of Pages : 26 No. of Claims : 64

(12) PATENT APPLICATION PUBLICATION
(19) INDIA
(22) Date of filing of Application :12/11/2013
(21) Application No.9755/DELNP/2013 A
(43) Publication Date : 19/12/2014

(54) Title of the invention : COMPOSITIONS AND METHODS FOR INHIBITING GENE EXPRESSION OF HEPATITIS B VIRUS

(51) International classification :C12N15/113
(31) Priority Document No :11172235.1
(32) Priority Date :30/06/2011
(33) Name of priority country :EPO
(86) International Application No :PCT/US2012/044505
Filing Date :28/06/2012
(87) International Publication No :WO 2013/003520
(61) Patent of Addition to Application Number :NA
Filing Date :NA
(62) Divisional to Application Number :NA
Filing Date :NA

(71)**Name of Applicant :**
1)ARROWHEAD RESEARCH CORPORATION
Address of Applicant :225 S. Lake Ave Suite 1050 Pasadena CA 91101 U.S.A.
(72)**Name of Inventor :**
1)CHIN Daniel
2)DECKERT Jochen
3)HOSSBACH Markus
4)JOHN Matthias

(57) Abstract :
The invention relates to a double stranded ribonucleic acid (dsRNA) for inhibiting the expression of a Hepatitis B Virus gene. The invention also relates to a pharmaceutical composition comprising the dsRNA or nucleic acid molecules or vectors encoding the same together with a pharmaceutically acceptable carrier; methods for treating diseases caused by Hepatitis B Virus infection using said pharmaceutical composition: and methods for inhibiting the expression of a Hepatitis B Virus gene in a cell.

No. of Pages : 319 No. of Claims : 20

(12) PATENT APPLICATION PUBLICATION
(19) INDIA
(22) Date of filing of Application :12/11/2013
(21) Application No.9756/DELNP/2013 A
(43) Publication Date : 19/12/2014

(54) Title of the invention : HEAT SINK FOR COOLING POWER ELECTRONICS

(51) International classification :H01L23/36,H01L23/367,H01L23/467
(31) Priority Document No :61/487068
(32) Priority Date :17/05/2011
(33) Name of priority country :U.S.A.
(86) International Application No :PCT/US2012/033184
Filing Date :12/04/2012
(87) International Publication No :WO 2012/158289
(61) Patent of Addition to Application Number :NA
Filing Date :NA
(62) Divisional to Application Number :NA
Filing Date :NA

(71)**Name of Applicant :**
1)CARRIER CORPORATION
Address of Applicant :One Carrier Place Farmington Connecticut 06034 U.S.A.
(72)**Name of Inventor :**
1)TARAS Michael F.
2)LEE KeonWoo
3)PERKOVICH Mark J.
4)DURAISAMY Suresh
5)LIAO XuQiang

(57) Abstract :
A heat sink device for cooling a power electronics module includes a base platform having a first surface and a second surface on opposite sides of the base platform a plurality of upright members extending outwardly from the first surface of the base platform and defining a cavity wherein the power electronics module is disposed in conductive heat exchange relationship with the first surface of the base platform and a plurality of heat transfer fins extending outwardly from the second surface of the base platform and defining a plurality of cooling air flow channels.

No. of Pages : 20 No. of Claims : 22

(12) PATENT APPLICATION PUBLICATION
(19) INDIA
(22) Date of filing of Application :13/11/2013
(21) Application No.9761/DELNP/2013 A
(43) Publication Date : 19/12/2014

(54) Title of the invention : SUBSTITUTED PYRIDOPYRAZINES AS NOVEL SYK INHIBITORS

(51) International classification :C07D471/04,A61K31/4985,A61K31/5375
(31) Priority Document No :PCT/CN2011/075431
(32) Priority Date :08/06/2011
(33) Name of priority country :China
(86) International Application No :PCT/CN2012/076576
Filing Date :07/06/2012
(87) International Publication No :WO 2012/167733
(61) Patent of Addition to Application Number :NA
Filing Date :NA
(62) Divisional to Application Number :NA
Filing Date :NA

(71)**Name of Applicant :**
1)HUTCHISON MEDIPHARMA LIMITED
Address of Applicant :Building 4 720 Cailun Road ZJ. Hi Tech Park Shanghai 201203 China
(72)**Name of Inventor :**
1)SU Wei Guo
2)DENG Wei
3)JI Jianguo

(57) Abstract :
Provided are pyridopyrazine compounds of formula (I) pharmaceutical compositions thereof and methods of use therefore wherein R R R Rand m are as defined in the specification.

No. of Pages : 209 No. of Claims : 30

(12) PATENT APPLICATION PUBLICATION
(19) INDIA
(22) Date of filing of Application :08/11/2013
(21) Application No.9646/DELNP/2013 A
(43) Publication Date : 19/12/2014

(54) Title of the invention : METHOD FOR PRODUCING RUBBER COMPOSITION

(51) International classification :C08J3/20,C08K3/00,C08K3/04
(31) Priority Document No :2011102366
(32) Priority Date :28/04/2011
(33) Name of priority country :Japan
(86) International Application No :PCT/JP2012/060979
Filing Date :24/04/2012
(87) International Publication No :WO 2012/147746
(61) Patent of Addition to Application Number :NA
Filing Date :NA
(62) Divisional to Application Number :NA
Filing Date :NA

(71)**Name of Applicant :**
1)BRIDGESTONE CORPORATION
Address of Applicant :10 1 Kyobashi 1 chome Chuo ku Tokyo 1048340 Japan
(72)**Name of Inventor :**
1)HIRATA Narukuni
2)OBA Takeshi
3)WATANABE Satoru

(57) Abstract :
The invention is a process for producing a rubber composition containing at least one rubber component (A) selected from natural rubbers and synthetic diene rubbers, a filler containing an inorganic filler (B), a silane coupling agent (C) and a vulcanization accelerator (D), wherein the rubber composition is kneaded in multiple stages, the rubber component (A), all or a portion of the inorganic filler (B), all or a portion of the silane coupling agent (C) and the vulcanization accelerator (D) are added and kneaded in the first stage of kneading, and the specific energy for kneading in the first stage is from 0.05 to 1.50 kWh/kg. The specific energy is obtained by dividing the power consumption by the motor in the kneading device in the first stage of kneading by the total mass of the rubber composition therein. In the process, the coupling function activity can be further increased and a rubber composition favorably having a low-heat-generation property and having good abrasion resistance can be obtained.

No. of Pages : 55 No. of Claims : 20

(12) PATENT APPLICATION PUBLICATION
(19) INDIA
(22) Date of filing of Application :08/11/2013
(21) Application No.9648/DELNP/2013 A
(43) Publication Date : 19/12/2014

(54) Title of the invention : CONTROL DEVICE FOR A VEHICLE BRAKE SYSTEM AND METHOD FOR OPERATING A VEHICLE BRAKE SYSTEM

(51) International classification :B60T1/10
(31) Priority Document No :10 2011 075 983.2
(32) Priority Date :17/05/2011
(33) Name of priority country :Germany
(86) International Application No :PCT/EP2012/054890
Filing Date :20/03/2012
(87) International Publication No :WO 2012/156130
(61) Patent of Addition to Application Number :NA
Filing Date :NA
(62) Divisional to Application Number :NA
Filing Date :NA

(71)**Name of Applicant :**
1)ROBERT BOSCH GMBH
Address of Applicant :Postfach 30 02 20 70442 Stuttgart Germany
(72)**Name of Inventor :**
1)STRENGERT Stefan
2)KUNZ Michael

(57) Abstract :
The invention relates to a control device (80) for a brake system, comprising a 5 generator control unit which, taking into account a sensor signal regarding an actuation force with which a brake actuation element (22) is actuated and a data signal regarding at least one theoretically applicable generator braking moment, allows a desired generator braking moment to be defined, and further comprising a valve control unit which, if the defined desired generator braking moment is zero, allows at least one storage chamber-opening valve 10 (20a, 20b) of a brake circuit (14a, 14b) to be moved in a controlled manner into a first valve position in such a way that brake fluid can be displaced from a master cylinder (10) into at least one wheel brake caliper (16a, 16b) of the brake circuit (14a, 14b) and brake fluid is prevented from being displaced from the master cylinder (10) into a storage chamber (18a, 18b) of the brake circuit (14a, 14b), and which, if the defined desired generator braking 15 moment differs from zero, allows the at least one storage chamber-opening valve (20a, 20b) to be moved in a controlled manner into a second valve position in such a way that brake fluid can be displaced fi-om the master cylinder (10) into the storage chamber (18a, 18b). The invention further relates to a method for operating a vehicle brake system.

No. of Pages : 29 No. of Claims : 11

(12) PATENT APPLICATION PUBLICATION
(19) INDIA
(22) Date of filing of Application :08/11/2013
(21) Application No.9649/DELNP/2013 A
(43) Publication Date : 19/12/2014

(54) Title of the invention : INDUSTRIAL METHOD FOR PREPARING ALKALINE HYDROLYSATES OF VEGETABLE PROTEINS

(51) International classification :A23J3/34,A23J3/32
(31) Priority Document No :11 54241
(32) Priority Date :16/05/2011
(33) Name of priority country :France
(86) International Application No :PCT/FR2012/051107
Filing Date :16/05/2012
(87) International Publication No :WO 2012/156645
(61) Patent of Addition to Application Number :NA
Filing Date :NA
(62) Divisional to Application Number :NA
Filing Date :NA

(71)**Name of Applicant :**
1)ROQUETTE FRERES
Address of Applicant :F 62136 Lestrem France
(72)**Name of Inventor :**
1)DUVET Sophie
2)DHALLEINE Claire

(57) Abstract :
The invention relates to a method for preparing alkaline hydrolysates of vegetable proteins characterised in that it includes the following steps: 1) placing the vegetable proteins in suspension in water such as to have a concentration of 15 to 30 dry weight % at a temperature of 70 to 80 °C and a pH of 9.5 to 10.5 by adding an alkaline hydroxide selected from the group made up of sodium hydroxide and potassium hydroxide; 2) allowing said suspension to incubate for 10 to 15 hours at a temperature of 70 to 80 °C and a pH of 9.5 to 10.5; 3) neutralising said heated suspension by means of a mineral acid; and 4) drying the neutralised suspension such as to obtain the alkaline hydrolysate.

No. of Pages : 20 No. of Claims : 4

(12) PATENT APPLICATION PUBLICATION
(19) INDIA
(22) Date of filing of Application :13/11/2013
(21) Application No.9770/DELNP/2013 A
(43) Publication Date : 19/12/2014

(54) Title of the invention : SGLT 2 INHIBITORS FOR TREATING METABOLIC DISORDERS IN PATIENTS TREATED WITH NEUROLEPTIC AGENTS

(51) International classification :A61K31/7034,A61K31/551,A61K31/4515
(31) Priority Document No :11168641.6
(32) Priority Date :03/06/2011
(33) Name of priority country :EPO
(86) International Application No :PCT/EP2012/060194
Filing Date :31/05/2012
(87) International Publication No :WO 2012/163990
(61) Patent of Addition to Application Number :NA
Filing Date :NA
(62) Divisional to Application Number :NA
Filing Date :NA

(71)**Name of Applicant :**
1)BOEHRINGER INGELHEIM INTERNATIONAL GMBH
Address of Applicant :Binger Strasse 173 55216 Ingelheim Am Rhein Germany
(72)**Name of Inventor :**
1)WIENRICH Marion
2)MAYOUX Eric

(57) Abstract :
The invention relates to methods for preventing slowing the progression of delaying or treating metabolic disorders induced in patients by the treatment with neuroleptic agents comprising administering to the patients an SGLT2 inhibitor.

No. of Pages : 76 No. of Claims : 33

(12) PATENT APPLICATION PUBLICATION
(19) INDIA
(22) Date of filing of Application :12/11/2013
(21) Application No.9724/DELNP/2013 A
(43) Publication Date : 19/12/2014

(54) Title of the invention : SAFETY CONFINEMENT EQUIPMENT FOR LASER RADIATION

(51) International classification :B23K26/42,B23K26/26,B23K26/08
(31) Priority Document No :11290307.5
(32) Priority Date :01/07/2011
(33) Name of priority country:EPO
(86) International Application No :PCT/EP2012/055003
Filing Date :21/03/2012
(87) International Publication No :WO 2013/004404
(61) Patent of Addition to Application Number :NA
Filing Date :NA
(62) Divisional to Application Number :NA
Filing Date :NA

(71)**Name of Applicant :**
1)SIEMENS VAI METALS TECHNOLOGIES SAS
Address of Applicant :51 rue Sibert F 42403 Saint Chamond France
(72)**Name of Inventor :**
1)DOREY Nicolas
2)RUESCH Jrmie
3)THOMASSON Herve

(57) Abstract :
The prsent invention relates to a safe- TL ty confinement equipment for laser radiation, inclu- A ding a safety confinement chamber (EN) having two laterally opposite openings (01, 02) through which at EN least one mtal strip (B) can pass, the chamber including f rst and second jaw devices (Mi l , M12 M12s; M21, M22, M22s) for clamping the strip arranged on F 1a the path of travel of the strip between the two ope nings, wherein said jaws are transversely arranged at least over the width of the strip, a head (TL) of cutting 0 2 0 1 or welding equipment emitting a beam of laser radia tion to be confined, wherein said beam can be moved transversely between a pair of jaws (Ml 1, M12) arran ged opposite each other on one side of a surface of the M22 M12 strip, wherein, in the position in which the jaws clamp the strip, the engagement of the jaws (Mi l , M12, M12s; M21, M22, M22s) on the surfaces of the strip M22s M 12s induces the formation of a physical screen (Flb) V22s V 12s against the laser radiation, which prevents said radia o tion f m passing through the two openings of the chamber.

No. of Pages : 19 No. of Claims : 17

(12) PATENT APPLICATION PUBLICATION
(19) INDIA
(22) Date of filing of Application :12/11/2013
(21) Application No.9725/DELNP/2013 A
(43) Publication Date : 19/12/2014

(54) Title of the invention : PROCESS FOR MAKING A FLEXIBLE POLYURETHANE FOAM

(51) International classification :C08G18/10,C08G18/16,C08G18/48
(31) Priority Document No :11175338.0
(32) Priority Date :26/07/2011
(33) Name of priority country:EPO
(86) International Application No :PCT/EP2012/064466
Filing Date :24/07/2012
(87) International Publication No :WO 2013/014143
(61) Patent of Addition to Application Number :NA
Filing Date :NA
(62) Divisional to Application Number :NA
Filing Date :NA

(71)**Name of Applicant :**
1)HUNTSMAN INTERNATIONAL LLC
Address of Applicant :500 Huntsman Way Salt Lake City UT 84108 U.S.A.
(72)**Name of Inventor :**
1)MACKEN Johan Antoine Stefaan
2)JONCHERAY Thomas Julien
3)VANDENBROECK Jan

(57) Abstract :
Process for making a flexible polyurethane foam by reacting a polyisocyanate and a polyol composition in the presence of water a reactive amine catalyst and a specific metal salt. The foams have a low level of volatile organic compounds (VOCs) and a desirable combination of mechanical and durability properties

No. of Pages : 27 No. of Claims : 8

(12) PATENT APPLICATION PUBLICATION
(19) INDIA
(22) Date of filing of Application :12/11/2013
(21) Application No.9726/DELNP/2013 A
(43) Publication Date : 19/12/2014

(54) Title of the invention : TOWER PRODUCTION METHOD

(51) International classification :B21C37/18,F03D1/00,F03D11/00
(31) Priority Document No :2011/04141
(32) Priority Date :27/04/2011
(33) Name of priority country :Turkey
(86) International Application No :PCT/EP2011/058768
Filing Date :27/05/2011
(87) International Publication No :WO 2012/146317
(61) Patent of Addition to Application Number :NA
Filing Date :NA
(62) Divisional to Application Number :NA
Filing Date :NA

(71)**Name of Applicant :**
1)UZTEK ENDUSTRI TESISLERI INSAAT IMALAT VE MONTAJ SANAYI VE TICARET LIMITED SIRKETI
Address of Applicant :Basbereket Mah. Kochisar Mevkii No:186 Ayas 06710 Ankara Turkey
(72)**Name of Inventor :**
1)UNAN Cevdet

(57) Abstract :
A tower (C) production method is developed with the present invention comprising a first production stage including the steps of unrolling and bringing into a planar state a sheet metal (B) wound around a coil (A); bending the planar sheet metal (B) at the lateral direction at varying bending radii (d); and winding the bent sheet metal ( ) into a conical coil ( ) as well as a final production stage yielding the tower and including the steps of feeding the sheet metal ( ) unwound from the conical coil ( ) to at least one winding machine (8) and bending and winding the bent sheet metal ( ) in the winding machine around a central bending axis (T) parallel to one surface (B1) thereof so that a defined initial winding radius and the angle between a longer edge (B3) thereof and the axis (T) are kept constant and the longer edge (B3) of the sheet metal is joined over itself.

No. of Pages : 18 No. of Claims : 12

(12) PATENT APPLICATION PUBLICATION
(19) INDIA
(22) Date of filing of Application :12/11/2013
(21) Application No.9727/DELNP/2013 A
(43) Publication Date : 19/12/2014

(54) Title of the invention : DISTRIBUTED AVIONICS SYSTEM AND METHOD FOR BACKUP HANDLING IN AN AVIONICS SYSTEM

(51) International classification :G06F11/20
(31) Priority Document No :NA
(32) Priority Date :NA
(33) Name of priority country :NA
(86) International Application No :PCT/SE2011/050624
Filing Date :17/05/2011
(87) International Publication No :WO 2012/158081
(61) Patent of Addition to Application Number :NA
Filing Date :NA
(62) Divisional to Application Number :NA
Filing Date :NA

(71)**Name of Applicant :**
1)SAAB AB
Address of Applicant :S 581 88 Linkping Sweden
(72)**Name of Inventor :**
1)DANIELSSON Torkel
2)H…KEG…RD Jan
3)GRIPSBORN Anders

(57) Abstract :
The present invention relates to a distributed avionics system (100 500) having a plurality of computer nodes arranged to execute a plurality of partitions/applications (P1 P2 P3 P4 P5 P6). The distributed avionics system comprises reconfiguration means (332) arranged to reconfigure the distributed avionics system upon detection of failure in at least one of the computer nodes. Each partition/application is associated to a application/partition availability level. The reconfiguration means are arranged to reconfigure the distributed avionics system based on the partition/application availability levels of the partition/applications (P1 P2 P3 P4 P5 P6). The present invention further relates to a method for back up handling in a distributed avionics system having a plurality of computer nodes (A B C).

No. of Pages : 30 No. of Claims : 13

(12) PATENT APPLICATION PUBLICATION
(19) INDIA
(22) Date of filing of Application :13/11/2013
(21) Application No.9771/DELNP/2013 A
(43) Publication Date : 19/12/2014

(54) Title of the invention : MICROWAVEABLE BATTER

(51) International classification :A23L1/31,A23L1/315,A23L1/00
(31) Priority Document No :EP11166066.8
(32) Priority Date :13/05/2011
(33) Name of priority country :EPO
(86) International Application No :PCT/GB2012/051215
Filing Date :30/05/2012
(87) International Publication No :WO 2012/175930
(61) Patent of Addition to Application Number :NA
Filing Date :NA
(62) Divisional to Application Number :NA
Filing Date :NA

(71)**Name of Applicant :**
1)CRISP SENSATION HOLDING S.A.
Address of Applicant :1 rue Pedro Meylan CH 1208 Geneva Switzerland
(72)**Name of Inventor :**
1)PICKFORD Keith

(57) Abstract :
A microwave cookable or reheatable foodstuff coating composition comprises 55 to 80 wt% water and 20 to 45 wt% by dry weight of an ingredient mixture including: a. 35 to 60 wt% of a flour component comprising one or more flours selected from soy flour maize flour rice flour and wheat flour; b. 15 to 35 wt% of non modified starch; c. 0.1 to 5 wt% of a gelling agent; d. 0 to 15 wt% of modified starch; and e. 0 to 35 wt% of other edible ingredients.

No. of Pages : 20 No. of Claims : 18

(12) PATENT APPLICATION PUBLICATION
(19) INDIA
(22) Date of filing of Application :13/11/2013
(21) Application No.9772/DELNP/2013 A
(43) Publication Date : 19/12/2014

(54) Title of the invention : NUTRITIONAL COMPOSITIONS HAVING EXOGENOUS MILK FAT GLOBULE MEMBRANE COMPONENTS

(51) International classification :A23C9/15,A23C21/00,A23L1/30
(31) Priority Document No :NA
(32) Priority Date :NA
(33) Name of priority country :NA
(86) International Application No :PCT/US2011/039612
Filing Date :08/06/2011
(87) International Publication No :WO 2012/170021
(61) Patent of Addition to Application Number :NA
Filing Date :NA
(62) Divisional to Application Number :NA
Filing Date :NA

(71)**Name of Applicant :**
1)NESTEC S.A.
Address of Applicant :Avenue Nestle 55 CH 1800 Vevey Switzerland
(72)**Name of Inventor :**
1)BOLSTER Doug
2)ROUGHEAD Zamzam Fariba

(57) Abstract :
Nutritional compositions including milk fat globule membrane components (MFGM) and at least one nutrient are provided. The milk-derived, bioactive lipids help to modulate conditions typically found in the elderly including, for example, lowgrade inflammation, loss of lean body mass, skeletal muscle cell membrane instability, and joint inflammation. The nutrients may in clude, but are not limited to, whey protein micelles, citrulline, branched chain fatty acids, and a-hydroxycaproic acid (a-HICA). Methods for treating an individual having, or at risk of having, a medical condition are also provided.

No. of Pages : 52 No. of Claims : 20

(12) PATENT APPLICATION PUBLICATION
(19) INDIA
(22) Date of filing of Application :13/11/2013
(21) Application No.9773/DELNP/2013 A
(43) Publication Date : 19/12/2014

(54) Title of the invention : NEW BIODEGRADABLE POLYESTERAMIDE COPOLYMERS FOR DRUG DELIVERY

(51) International classification :C08G69/44,C08L77/12,A61K47/34
(31) Priority Document No :11171191.7
(32) Priority Date :23/06/2011
(33) Name of priority country :EPO
(86) International Application No :PCT/EP2012/062265
Filing Date :25/06/2012
(87) International Publication No :WO 2012/175746
(61) Patent of Addition to Application Number :NA
Filing Date :NA
(62) Divisional to Application Number :NA
Filing Date :NA

(71)**Name of Applicant :**
1)DSM IP ASSETS B.V.
Address of Applicant :Het Overloon 1 NL 6411 TE Heerlen Netherlands
(72)**Name of Inventor :**
1)MIHOV George
2)DRAAISMA Guy

(57) Abstract :
The present invention relates to a poly (ester amide) (PEA) having a chemical formula described by structural formula (IV) wherein m+p varies from 0.9 0.1 and q varies from 0.1 to 0.9 m+p+q=1 whereby m or p could be 0 n is about 5 to about 300; (pref. 50 200) R is independently selected from the group consisting of (C C) alkylene (C C) alkenylene (R CO O R O CO R) CHR O CO R COOCR and combinations thereof; R and R in a single backbone unit m or p respectively are independently selected from the group consisting of hydrogen (C C)alkyl (C C)alkenyl (C C)alkynyl (C C)aryl (C C)alkyl (CH)SH (CH)S(CH) CHOH CH(OH)CH (CH)NH+ (CH)NHC(=NH+)NH CHCOOH (CH)COOH CH CO NH CHCH CO NH CHCHCOOH CH CH CH(CH) (CH) CH CH HN (CH) Ph CH CH=C CH HO p Ph CH (CH) CH Ph NH NH (CH) C NH CH=N CH=C CH . R is selected from the group consisting of (C C)alkylene (C C)alkenylene alkyloxy or oligoethyleneglycol R is selected from bicyclic fragments of 1 4:3 6 dianhydrohexitols of structural formula (III); R is selected from the group consisting of (C C)aryl (C C)alkyl R is (CH2)4 ; R or R are independently selected from C C alkylene or C C alkenylene. R or R are independently selected from H methyl C C alkylene or C C alkenylene whereby a is at least 0.05 and b is at least 0.05 and a+b=1.

No. of Pages : 31 No. of Claims : 16

(12) PATENT APPLICATION PUBLICATION
(19) INDIA
(22) Date of filing of Application :13/11/2013
(21) Application No.9774/DELNP/2013 A
(43) Publication Date : 19/12/2014

(54) Title of the invention : MICRO OR NANOPARTICLES COMPRISING A BIODEGRADABLE POLYESTERAMIDE COPOLYMER FOR USE IN THE DELIVERY OF BIOACTIVE AGENTS

(51) International classification :C08G69/44,C08L77/12,A61K47/34
(31) Priority Document No :11171191.7
(32) Priority Date :23/06/2011
(33) Name of priority country :EPO
(86) International Application No :PCT/EP2012/062267
Filing Date :25/06/2012
(87) International Publication No :WO 2012/175748
(61) Patent of Addition to Application Number :NA
Filing Date :NA
(62) Divisional to Application Number :NA
Filing Date :NA

(71)**Name of Applicant :**
1)DSM IP ASSETS B.V.
Address of Applicant :Het Overloon 1 NL 6411 TE Heerlen Netherlands
(72)**Name of Inventor :**
1)MIHOV George
2)ZUPANCICH John Andrew

(57) Abstract :
The present invention relates to micro or nanoparticles comprising a polyesteramide (PEA) having a chemical formula described by structural formula (IV) Formula (IV) wherein m+p varies from 0.9 0.1 and q varies from 0.1 to 0.9 m+p+q=1 whereby m or p could be 0 n is about 5 to about 300; (pref. 50 200) R is independently selected from the group consisting of (C C) alkylene (C C) alkenylene (R CO O R O CO R) CHR O CO R COOCR and combinations thereof; R and R in a single backbone unit m or p respectively are independently selected from the group consisting of hydrogen (CC)alkyl (C C)alkenyl (C C)alkynyl (C C)aryl (C C)alkyl (CH)SH (CH)S(CH) CHOH CH(OH)CH (CH)NH+ (CH)NHC(=NH+)NH CHCOOH (CH)COOH CH CO NH CHCH CO NH CHCHCOOH CH CH CH(CH) (CH) CH CH HN (CH) Ph CH CH=C CH HO p Ph CH (CH) CH Ph NH NH (CH) C NH CH=N CH=C CH . R is selected from the group consisting of (C C)alkylene (C C)alkenylene alkyloxy or oligoethyleneglycol R is selected from bicyclic fragments of 1 4:3 6 dianhydrohexitols of structural formula (III); Formula III Ris selected from the group consisting of (C C)aryl (C C)alkyl R is (CH2)4 ; R or R are independently selected from C C alkylene or C C alkenylene. R or R are independently selected from H methyl C C alkylene or C C alkenylene whereby a is at least 0.05 and b is at least 0.05 and a+b=1.

No. of Pages : 31 No. of Claims : 19

(12) PATENT APPLICATION PUBLICATION
(19) INDIA
(22) Date of filing of Application :08/11/2013
(21) Application No.9657/DELNP/2013 A
(43) Publication Date : 19/12/2014

(54) Title of the invention : ELECTROCHEMICAL BIOSENSOR BASED ON HOLLOW COILS

(51) International classification :C12Q1/00,G01N33/543
(31) Priority Document No :61/517415
(32) Priority Date :18/04/2011
(33) Name of priority country :U.S.A.
(86) International Application No :PCT/EP2012/057040
Filing Date :18/04/2012
(87) International Publication No :WO 2012/143370
(61) Patent of Addition to Application Number :NA
Filing Date :NA
(62) Divisional to Application Number :NA
Filing Date :NA

(71)**Name of Applicant :**
1)NOVIOSENSE B.V.
Address of Applicant :Molenveldlaan 43 NL 6523 RJ Nijmegen Netherlands
(72)**Name of Inventor :**
1)HANSSEN Johannes Hendrikus Leonardus
2)TWEEHUYSEN Robert

(57) Abstract :
The invention relates to a biosensor comprising a hollow coil comprising wires coiled in parallel and an electronic circuit component operably connected to the coil wherein the wires include at least a first coiled wire which may be used as a counter electrode a second coiled wire which may be used as a working electrode and a third coiled wire which may be used as a reference electrode wherein the second coiled wire is provided with a biocompatible layer comprising a bioreceptor wherein the electronic circuit component is capable of generating an input signal for a transceiver based upon the activity of the bioreceptor and wirelessly sending the input signal to the transceiver wherein the electronic circuit component is encapsulated in a biocompatible resin.

No. of Pages : 33 No. of Claims : 24

(12) PATENT APPLICATION PUBLICATION
(19) INDIA
(22) Date of filing of Application :08/11/2013
(21) Application No.9658/DELNP/2013 A
(43) Publication Date : 19/12/2014

(54) Title of the invention : BRAKE CHAMBER BOOT MEMBER AND BUSH MEMBER

(51) International classification :B60T13/38,F16J3/04,F16J15/52
(31) Priority Document No :2011090047
(32) Priority Date :14/04/2011
(33) Name of priority country :Japan
(86) International Application No:PCT/JP2012/060801
Filing Date :16/04/2012
(87) International Publication No :WO 2012/141341
(61) Patent of Addition to Application Number :NA
Filing Date :NA
(62) Divisional to Application Number :NA
Filing Date :NA

(71)**Name of Applicant :**
1)Nabtesco Automotive Corporation
Address of Applicant :JA Kyosai Bldg. 7 9 Hirakawacho 2 chome Chiyoda ku Tokyo 1020093 Japan
(72)**Name of Inventor :**
1)SHIMOMURA Takeo
2)NISHIMURA Akinori

(57) Abstract :
A brake chamber provided with a configuration connecting a housing, which forms an accommodation space for a push plate, and a cylinder, in which a pushrod is accommodated. In order to prevent problems caused by the intrusion of foreign matter into the housing resulting in 10 insufficient strength at the position where the housing and the cylinder are connected, while inhibiting an increase in costs, a brake chamber (1) is provided with: a rod portion (22), in which a pushrod (2) is made to advance towards a brake device by a piston action in a cylinder (17) by means 15 of compressed air pressure; and a dust boot (29), which prevents the intrusion of foreign matter such as mud into the cylinder (17) . A sealing portion (29c) is formed on the dust boot (29) and acts to prevent the intrusion of foreign matter to the connection portion of a cup (16) and the cylinder (17) 20 by being in elastic contact with the inner peripheral surface (16b) of the cup (16).

No. of Pages : 65 No. of Claims : 12

(12) PATENT APPLICATION PUBLICATION
(19) INDIA
(22) Date of filing of Application :08/11/2013
(21) Application No.9659/DELNP/2013 A
(43) Publication Date : 19/12/2014

(54) Title of the invention : TOLEROGENIC SYNTHETIC NANOCARRIERS

(51) International classification :A61K31/445,A61K39/38,A61K9/16
(31) Priority Document No :61/480946
(32) Priority Date :29/04/2011
(33) Name of priority country :U.S.A.
(86) International Application No :PCT/US2012/035360
Filing Date :27/04/2012
(87) International Publication No :WO 2012/149252
(61) Patent of Addition to Application Number :NA
Filing Date :NA
(62) Divisional to Application Number :NA
Filing Date :NA

(71)**Name of Applicant :**
1)SELECTA BIOSCIENCES INC.
Address of Applicant :480 Arsenal Street Building One Watertown MA 02472 U.S.A.
(72)**Name of Inventor :**
1)FRASER Christopher
2)ROY Christopher J.
3)LIPFORD Grayson B.
4)MALDONADO Roberto A.

(57) Abstract :
This invention relates at least in part to compositions comprising synthetic nanocarriers and immunosuppressants that result in immune suppressive effects. Such compositions can further comprise antigen and provide antigen specific tolerogenic immune responses.

No. of Pages : 101 No. of Claims : 44

(12) PATENT APPLICATION PUBLICATION
(19) INDIA
(22) Date of filing of Application :08/11/2013
(21) Application No.9660/DELNP/2013 A
(43) Publication Date : 19/12/2014

(54) Title of the invention : CONTROLLED RELEASE OF IMMUNOSUPPRESSANTS FROM SYNTHETIC NANOCARRIERS

(51) International classification :A61K9/16,A61K47/48,A61K9/14
(31) Priority Document No :61/480946
(32) Priority Date :29/04/2011
(33) Name of priority country :U.S.A.
(86) International Application No :PCT/US2012/035581
Filing Date :27/04/2012
(87) International Publication No :WO 2012/149411
(61) Patent of Addition to Application Number :NA
Filing Date :NA
(62) Divisional to Application Number :NA
Filing Date :NA

(71)**Name of Applicant :**
1)SELECTA BIOSCIENCES INC.
Address of Applicant :480 Arsenal Street Building One Watertown MA 02472 U.S.A.
(72)**Name of Inventor :**
1)ALTREUTER David H.
2)GRISET Aaron P.
3)MALDONADO Roberto A.

(57) Abstract :
Disclosed are synthetic nanocarrier compositions that provide controlled release of immunosuppressants as well as related methods. The synthetic nanocarrier compositions may also include antigen in some embodiments.

No. of Pages : 115 No. of Claims : 81

(12) PATENT APPLICATION PUBLICATION
(19) INDIA
(22) Date of filing of Application :08/11/2013
(21) Application No.9661/DELNP/2013 A
(43) Publication Date : 19/12/2014

(54) Title of the invention : COMPOUND DUAL RELEASE CAPSULE FORMULATION COMPRISED OF BROMODIHYDROARTEMISININ AND A FE2+ AGENT

(51) International classification :A61K31/357,A61K33/26,A61K47/02
(31) Priority Document No :201110089000.X
(32) Priority Date :08/04/2011
(33) Name of priority country :China
(86) International Application No :PCT/CN2012/073436
Filing Date :31/03/2012
(87) International Publication No :WO 2012/136125
(61) Patent of Addition to Application Number :NA
Filing Date :NA
(62) Divisional to Application Number :NA
Filing Date :NA

(71)**Name of Applicant :**
1)SHI Yanyu
Address of Applicant :Room 11 Unit 2 Building 1 No.7 Niusha Road Jinjiang Chengdu Sichuan 610066 China
(72)**Name of Inventor :**
1)SHI Yanyu

(57) Abstract :
Disclosed is a compound dual-release capsule formulation consisting of bromo-dihydroartemisinin and a Fe agent and comprising micropills dissolving in the intestine and micropills for rapid dissolution in the stomach, said micropills dissolving in the intestine consisting of cores of bromodihydroartemisinin and pharmaceutically acceptable excipients enrobed in intestinal-release coating, and said rapid-release micropills dissolving in the stomach consisting of Fe agent and pharmaceutically acceptable excipients. The micropills of intestinal-release bromo-dihydroartemisinin and the micropills of rapid-release Fe agent are packaged together in gelatin capsules dissolving in the stomach, thus constituting a dual-release formulation.

No. of Pages : 14 No. of Claims : 8

(12) PATENT APPLICATION PUBLICATION
(19) INDIA
(22) Date of filing of Application :13/11/2013
(21) Application No.9779/DELNP/2013 A
(43) Publication Date : 19/12/2014

(54) Title of the invention : SENSORY USE OF 6 CYCLOPENTYLIDENEHEXANE DERIVATIVES

(51) International classification :A61K8/33,A61K8/34,A61Q13/00
(31) Priority Document No :1154295
(32) Priority Date :17/05/2011
(33) Name of priority country :France
(86) International Application No :PCT/FR2012/051113
Filing Date :16/05/2012
(87) International Publication No :WO 2012/156649
(61) Patent of Addition to Application Number :NA
Filing Date :NA
(62) Divisional to Application Number :NA
Filing Date :NA

(71)**Name of Applicant :**
1)V. MANE FILS
Address of Applicant :620 route de Grasse F 06620 Bar Sur Loup France
(72)**Name of Inventor :**
1)MURATORE Agn¨s
2)CHANOT Jean Jacques

(57) Abstract :
The invention concerns the use of 6-cyclopentylidenehexane derivatives - 6, 5 cyclopentylidenehexan-1-ol and 6-cyciopentylidenehexanai - as sensory agents giving off a fragrance and/or a flavor of interest for a use in perfumery, in cosmetic, in parapharmacy, in detergent industry and in the food industry.

No. of Pages : 29 No. of Claims : 14

(12) PATENT APPLICATION PUBLICATION
(19) INDIA
(22) Date of filing of Application :13/11/2013
(21) Application No.9780/DELNP/2013 A
(43) Publication Date : 19/12/2014

(54) Title of the invention : DISPENSER WITH TABLE CLAMP

(51) International classification :A47K5/06,A47K10/38,A47K10/42
(31) Priority Document No :NA
(32) Priority Date :NA
(33) Name of priority country :NA
(86) International Application No :PCT/EP2011/056833
Filing Date :29/04/2011
(87) International Publication No :WO 2012/146300
(61) Patent of Addition to Application Number :NA
Filing Date :NA
(62) Divisional to Application Number :NA
Filing Date :NA

(71)**Name of Applicant :**
1)SCA HYGIENE PRODUCTS AB
Address of Applicant :S 405 03 Gteborg Sweden
(72)**Name of Inventor :**
1)JONSSON Mikael

(57) Abstract :
A dispenser (1) for disposable hygienic articles such as wipes or towels in stacks or rolls or soap comprises a clamp suitable for securing the dispenser (1) to a supporting structure (T) such as the edge of a shelf or a table. The clamp including a stationary clamping part (8) for engaging one side of the supporting structure a movable clamping part (4) for engaging an opposite side of the supporting structure and means for urging the clamping parts (8 4) towards each other so as to tighten the clamp about the supporting structure (T). The stationary (8) and the movable clamping part (4) each have a clamping face (18 14) and a spacing between the clamping faces (18 14) of the stationary clamping part (8) and the movable clamping part (4) is variable so as to adapt the clamp to supporting structures (T) of different thicknesses.

No. of Pages : 29 No. of Claims : 15

(12) PATENT APPLICATION PUBLICATION
(19) INDIA
(22) Date of filing of Application :13/11/2013
(21) Application No.9781/DELNP/2013 A
(43) Publication Date : 19/12/2014

(54) Title of the invention : CONTROL DEVICE FOR A VEHICLE BRAKE SYSTEM AND METHOD FOR OPERATING A VEHICLE BRAKE SYSTEM

(51) International classification :B60T8/48,B60L7/24
(31) Priority Document No :10 2011 075 971.9
(32) Priority Date :17/05/2011
(33) Name of priority country :Germany
(86) International Application No :PCT/EP2012/054782
Filing Date :19/03/2012
(87) International Publication No :WO 2012/156123
(61) Patent of Addition to Application Number :NA
Filing Date :NA
(62) Divisional to Application Number :NA
Filing Date :NA

(71)**Name of Applicant :**
1)ROBERT BOSCH GMBH
Address of Applicant :Postfach 30 02 20 70442 Stuttgart Germany
(72)**Name of Inventor :**
1)STRENGERT Stefan
2)KUNZ Michael

(57) Abstract :
The invention relates to a control device (80) for a vehicle brake systeii, valve control unit (1) which, taking into account a supplied data signal (2) regarding a generator braking moment currently applied or to be applied by a generator (78), allows at least one high-pressure pilot valve (20a, 20b) of a brake circuit (14a, 14b) of the brake system to be moved in a controlled manner into an at least partly open state in such a way that a volume of brake fluid can be displaced from a master cylinder (10) of the brake system into a storage chamber (18a, 18b) of the brake circuit (14a, 14b) via the at least one high-pressure pilot valve (20a, 20b) that has been moved in a controlled maimer into the at least partly open state. The invention further relates to a method for operating a vehicle brake system.

No. of Pages : 32 No. of Claims : 13

(12) PATENT APPLICATION PUBLICATION
(19) INDIA
(22) Date of filing of Application :13/11/2013

(21) Application No.9782/DELNP/2013 A
(43) Publication Date : 19/12/2014

(54) Title of the invention : METHOD FOR AUTHORISING

(51) International classification	:H04N21/254,H04N21/4627,G06F21/00
(31) Priority Document No	:11382180.5
(32) Priority Date	:31/05/2011
(33) Name of priority country	:EPO
(86) International Application No	:PCT/EP2012/057442
Filing Date	:24/04/2012
(87) International Publication No	:WO 2012/163602
(61) Patent of Addition to Application Number	:NA
Filing Date	:NA
(62) Divisional to Application Number	:NA
Filing Date	:NA

(71)**Name of Applicant :**
1)ALCATEL LUCENT
Address of Applicant :3 avenue Octave Grard F 75007 Paris France
(72)**Name of Inventor :**
1)VILLEGAS NUNEZ Alvaro
2)RUIZ ALONSO Jaime

(57) Abstract :
A method for authorising access to multimedia digital programmes with access control and broadcast by a broadcast server (11) to descrambling devices (13) through a communications network in which access request messages are transmitted for a reduced period of time to a scrambled multimedia digital programme from descramblers (13) to a licence server (12); comparison in the licence server (12) of the request messages received with a specific trust level associated with a predetermined credit level stored in the licence server (12) and in which each customer is assigned a credit level; if the comparison is positive transmission of an access authorisation and descrambling key from the licence server (12) to the descrambler (13) and retransmission of the authorised request messages received to the broadcast server (11) when the multimedia digital programme is being played or has finished.

No. of Pages : 11 No. of Claims : 9

(12) PATENT APPLICATION PUBLICATION
(19) INDIA
(22) Date of filing of Application :14/11/2013
(21) Application No.9803/DELNP/2013 A
(43) Publication Date : 19/12/2014

(54) Title of the invention : CONTROL DEVICE FOR A UV DISINFECTING SYSTEM WITH BROADBAND UV EMITTERS

(51) International classification :C02F1/32
(31) Priority Document No :10 2011 102 687.1
(32) Priority Date :20/05/2011
(33) Name of priority country :Germany
(86) International Application No :PCT/EP2012/002109
Filing Date :16/05/2012
(87) International Publication No :WO 2012/159719
(61) Patent of Addition to Application Number :NA
Filing Date :NA
(62) Divisional to Application Number :NA
Filing Date :NA

(71)**Name of Applicant :**
1)XYLEM IP HOLDINGS LLC
Address of Applicant :1133 Westchester Avenue White Plains NY 10604 U.S.A.
(72)**Name of Inventor :**
1)BOKERMANN Christian
2)K„MMERER Sven

(57) Abstract :
The invention relates to a device for monitoring and controlling water disinfecting systems having at least one broadband UV emitter (101) arranged in a channel (100), wherein said device has at least one sensor (103), which is arranged in the water at a distance from the broadband UV emitter (101), and wherein the sensor (103) is connected to a control unit (104), which is set up 10 to control the output of the broadband UV emitter (101) or the volumetric flow of water through the channel (100), wherein the sensor (103) has a maximum sensitivity to UV radiation in a wavelength range between 200 nm and 240 nm.

No. of Pages : 22 No. of Claims : 9

(12) PATENT APPLICATION PUBLICATION
(19) INDIA
(22) Date of filing of Application :12/11/2013
(21) Application No.9752/DELNP/2013 A
(43) Publication Date : 19/12/2014

(54) Title of the invention : VARIABLE FREQUENCY MAGNETIC FLOWMETER

(51) International classification :G01F1/56,G01F1/58,G01F1/60
(31) Priority Document No :13/135182
(32) Priority Date :28/06/2011
(33) Name of priority country :U.S.A.
(86) International Application No :PCT/US2012/042004
Filing Date :12/06/2012
(87) International Publication No :WO 2013/003021
(61) Patent of Addition to Application Number :NA
Filing Date :NA
(62) Divisional to Application Number :NA
Filing Date :NA

(71)**Name of Applicant :**
1)ROSEMOUNT INC.
Address of Applicant :8200 Market Blvd. Chanhassen MN 55317 U.S.A.
(72)**Name of Inventor :**
1)ROVNER Bruce

(57) Abstract :
An apparatus comprises a pipe section for process flow a coil for generating a magnetic field across the pipe section a current source for energizing the coil to generate the magnetic field and an electrode for sensing an electromotive force induced across the process flow by the magnetic field. The current source energizes the coil at a plurality of different pulse frequencies. A processor calculates a function of the electromotive force at the plurality of different pulse frequencies and generates a flow output based on the function.

No. of Pages : 21 No. of Claims : 22

(12) PATENT APPLICATION PUBLICATION
(19) INDIA
(22) Date of filing of Application :14/11/2013
(21) Application No.9810/DELNP/2013 A
(43) Publication Date : 19/12/2014

(54) Title of the invention : CATALYST FOR THE ALKYLATION OF AROMATIC HYDROCARBONS

(51) International classification :B01J29/70,B01J37/02,C07C2/66
(31) Priority Document No :11003778.5
(32) Priority Date :09/05/2011
(33) Name of priority country :EPO
(86) International Application No :PCT/EP2012/001889
Filing Date :03/05/2012
(87) International Publication No :WO 2012/152406
(61) Patent of Addition to Application Number :NA
Filing Date :NA
(62) Divisional to Application Number :NA
Filing Date :NA

(71)**Name of Applicant :**
1)SAUDI BASIC INDUSTRIES CORPORATION
Address of Applicant :P.O. Box 5101 11422 Riyadh Saudi Arabia
(72)**Name of Inventor :**
1)DAS Debasish

(57) Abstract :
The present invention relates to catalyst composition prepared by a method wherein an aluminosilicate zeolite having its pores filled with templating agent with a specific organic silicon compound to deposit said organic silicon compound on the surface of the zeolite to provide an organosilicon treated catalyst precursor; and calcining the organosilicon treated catalyst precursor under conditions sufficient to remove the templating agent from the zeolite. Furthermore the present invention relates to a method for preparing said catalyst composition and a process for alkylation of an aromatic hydrocarbon comprising contacting the catalyst composition of the present invention with a feed stream comprising said aromatic hydrocarbon and an alkylating agent under aromatic alkylation conditions.

No. of Pages : 23 No. of Claims : 13

(12) PATENT APPLICATION PUBLICATION
(19) INDIA
(22) Date of filing of Application :14/11/2013
(21) Application No.9812/DELNP/2013 A
(43) Publication Date : 19/12/2014

(54) Title of the invention : REGULATION OF NITRIC OXIDE RELEASE AND BIOFILM DEVELOPMENT

(51) International classification	:C07D501/24,C07D501/20,C07D503/14
(31) Priority Document No	:2011901872
(32) Priority Date	:16/05/2011
(33) Name of priority country	:Australia
(86) International Application No	:PCT/AU2012/000542
Filing Date	:16/05/2012
(87) International Publication No	:WO 2012/155203
(61) Patent of Addition to Application Number	:NA
Filing Date	:NA
(62) Divisional to Application Number	:NA
Filing Date	:NA

(71)**Name of Applicant :**
1)NEWSOUTH INNOVATIONS PTY LIMITED
Address of Applicant :Rupert Myers Building Gate 14 Barker Street University of New South Wales Sydney New South Wales 2052 Australia
2)UNIVERSITY OF WOLLONGONG
(72)**Name of Inventor :**
1)BARRAUD Nicolas
2)KARDAK Bharat Gangadhar
3)KELSO Michael John
4)KJELLEBERG Staffan
5)RICE Scott

(57) Abstract :
Regulation of nitric oxide release and biofilm development Abstract The present invention relates generally to methods and compounds for regulating the release of nitric oxide in the vicinity of biofilm forming microorganisms to regulate programmed cell death in the microorganisms and thereby promote dispersal of microorganism from biofilms and/or inhibit biofilm formation or development. More particularly the invention relates to the use of compounds to provide spatial and temporal control over nitric oxide release.

No. of Pages : 85 No. of Claims : 54

(12) PATENT APPLICATION PUBLICATION
(19) INDIA
(22) Date of filing of Application :14/11/2013
(21) Application No.9813/DELNP/2013 A
(43) Publication Date : 19/12/2014

(54) Title of the invention : USER CONFIGURABLE CENTRAL MONITORING STATION

(51) International classification :A61B5/00
(31) Priority Document No :61/486307
(32) Priority Date :15/05/2011
(33) Name of priority country :U.S.A.
(86) International Application No :PCT/US2012/038000
Filing Date :15/05/2012
(87) International Publication No :WO 2012/158720
(61) Patent of Addition to Application Number :NA
Filing Date :NA
(62) Divisional to Application Number :NA
Filing Date :NA

(71)**Name of Applicant :**
1)SPACELABS HEALTHCARE LLC
Address of Applicant :5150 220th Avenue SE Issaquah WA 98027 U.S.A.
(72)**Name of Inventor :**
1)VANGILDER James
2)STEURER Robert
3)DOWNS William Gregory
4)WALTERS Patricia Ruth

(57) Abstract :
The invention provides a dynamic central monitoring station having multiple touch screens for displaying numerical and graphical representation of vital statistics of one or more patients. The central monitoring station is connected to one or more bedside monitors and telemetry devices. The multiple touch screens are configurable to simultaneously display real time and historic patient data corresponding to a plurality of patients. One screen serves as a dedicated display screen for the review of individual patient data while the remaining screens continue to display vital statistics for all of the monitored patients.

No. of Pages : 43 No. of Claims : 21

(12) PATENT APPLICATION PUBLICATION
(19) INDIA
(22) Date of filing of Application :14/11/2013
(21) Application No.9815/DELNP/2013 A
(43) Publication Date : 19/12/2014

(54) Title of the invention : STEEL PLATE WITH LOW YIELD RATIO HIGH TOUGHNESS AND MANUFACTURING METHOD THEREOF

(51) International classification :C22C38/50
(31) Priority Document No :201110287965.X
(32) Priority Date :26/09/2011
(33) Name of priority country :China
(86) International Application No :PCT/CN2012/076049
Filing Date :25/05/2012
(87) International Publication No :WO 2013/044640
(61) Patent of Addition to Application Number :NA
Filing Date :NA
(62) Divisional to Application Number :NA
Filing Date :NA

(71)**Name of Applicant :**
1)BAOSHAN IRON & STEEL CO. LTD.
Address of Applicant :No.885 Fujin Road Baoshan District Shanghai 201900 China
(72)**Name of Inventor :**
1)ZHANG Aiwen
2)JIAO Sihai
3)YUAN Xiangqian
4)CHEN Yushan

(57) Abstract :
A steel plate with a low yield ratio and high toughness. The steel plate comprises components of by weight: C (0.05 0.08%) Si (0.15 0.30%) Mn (1.55 1.85%) P (less than or equal to 0.015%) S (less than or equal to 0.005%) Al (0.015 0.04%) Nb (0.015 0.025%) Ti (0.01 0.02%) Cr (0.20 0.40%) Mo (0.18 0.30%) N (less than or equal to 0.006%) O (less than or equal to 0.004%) Ca (0.0015 0.0050%) and Ni (less than or equal to 0.40%) a ratio of Ca to S being greater than or equal to 1.5 and the residual being Fe and inevitable impurities.

No. of Pages : 16 No. of Claims : 18

(12) PATENT APPLICATION PUBLICATION
(19) INDIA
(22) Date of filing of Application :11/11/2013
(21) Application No.9692/DELNP/2013 A
(43) Publication Date : 19/12/2014

(54) Title of the invention : SUBSITUTED ALIPHANES CYCLOPHANES HETERAPHANES HETEROPHANES HETERO HETERAPHANES AND METALLOCENES USEFUL FOR TREATING HCV INFECTIONS

(51) International classification	:A61K31/4178,A61K31/4164,A61P31/12
(31) Priority Document No	:61/490881
(32) Priority Date	:27/05/2011
(33) Name of priority country	:U.S.A.
(86) International Application No Filing Date	:PCT/US2012/039835 :29/05/2012
(87) International Publication No	:WO 2012/166716
(61) Patent of Addition to Application Number Filing Date	:NA :NA
(62) Divisional to Application Number Filing Date	:NA :NA

(71)**Name of Applicant :**
1)ACHILLION PHARMACEUTICALS INC.
Address of Applicant :300 George Street New Haven Connecticut 06511 U.S.A.
(72)**Name of Inventor :**
1)WILES Jason Allan
2)WANG Qiuping
3)HASHIMOTO Akihiro
4)PAIS Godwin
5)CHEN Dawei
6)WANG Xiangzhu
7)GADHACHANDA Venkat
8)PHADKE Avinash
9)DESHPANDE Milind

(57) Abstract :
The present disclosure provides substituted aliphanes cyclophanes heteraphanes heterophanes hetero heteraphanes and metallocenes of Formula (I) D M D (Formula I) useful as antiviral agents. In certain embodiments disclosed herein M is a group P A P where A is (Formula I) Certain substituted aliphanes cyclophanes heteraphanes heterophanes hetero heteraphanes and metallocenes disclosed herein are potent and/ or selective inhibitors of viral replication particularly Hepatitis C virus replication. Pharmaceutical compositions/ and combinations containing one or more substituted aliphanes cyclophanes heteraphanes heterophanes hetero heteraphanes and metallocenes and a pharmaceutically acceptable carrier are also provided by this disclosure. Methods for treating viral infections including Hepatitis C viral infections are provided by the disclosure.

No. of Pages : 124 No. of Claims : 20

(12) PATENT APPLICATION PUBLICATION
(19) INDIA
(22) Date of filing of Application :11/11/2013
(21) Application No.9693/DELNP/2013 A
(43) Publication Date : 19/12/2014

(54) Title of the invention : A WIND TURBINE OPTICAL WIND SENSOR

(51) International classification :G01P5/20,G01P5/26,G01P13/04
(31) Priority Document No :PA 2011 70219
(32) Priority Date :04/05/2011
(33) Name of priority country :Denmark
(86) International Application No :PCT/DK2012/050148
Filing Date :03/05/2012
(87) International Publication No:WO 2012/149940
(61) Patent of Addition to Application Number :NA
Filing Date :NA
(62) Divisional to Application Number :NA
Filing Date :NA

(71)**Name of Applicant :**
1)VESTAS WIND SYSTEMS A/S
Address of Applicant :Hedeager 44 DK 8200 Aarhus N Denmark
(72)**Name of Inventor :**
1)OLESEN Ib Svend

(57) Abstract :
The invention comprises a wind turbine optical wind sensor10mounted on the rotor 4 of a wind turbine either on the blades 5 or on the hub 5. The sensor comprises a plurality of light sources each generating respective sensor beams made up of at least two individual parallel component sensor beams. Transit times for particulate matter carried in the wind breaking the at least two component sensor beams are used to provide one or more of an indication of wind speed and/or a component of vertical wind speed. The data received from the sensor can be used in control processes for the operation of the wind turbine particularly for temporarily pitching the rotor blades in adverse wind conditions such as when vertical wind gusts are detected.

No. of Pages : 39 No. of Claims : 28

(12) PATENT APPLICATION PUBLICATION
(19) INDIA
(22) Date of filing of Application :11/11/2013
(21) Application No.9696/DELNP/2013 A
(43) Publication Date : 19/12/2014

(54) Title of the invention : COMPRESSOR WINDAGE MITIGATION

(51) International classification :F04D13/06,F04D25/06,F04D29/58
(31) Priority Document No :61/491509
(32) Priority Date :31/05/2011
(33) Name of priority country :U.S.A.
(86) International Application No :PCT/US2012/037517
Filing Date :11/05/2012
(87) International Publication No :WO 2012/166325
(61) Patent of Addition to Application Number :NA
Filing Date :NA
(62) Divisional to Application Number :NA
Filing Date :NA

(71)**Name of Applicant :**
1)CARRIER CORPORATION
Address of Applicant :One Carrier Place P.O. Box 4015 Farmington Connecticut 06034 U.S.A.
(72)**Name of Inventor :**
1)SISHTLA Vishnu M.

(57) Abstract :
A compressor (22) has a housing assembly (40) with a suction port (24) a discharge port (26) and a motor compartment (60). An electric motor (42) has a stator (62) within the motor compartment and a rotor (64) within the stator. The rotor is mounted for rotation about a rotor axis (500). One or more working elements (44) are coupled to the rotor to be driven by the rotor in at least a first condition so as to draw fluid in through the suction port and discharge the fluid from the discharge port. A gap (80) is between the rotor and stator. The gap is isolated (140 142) from an outer portion (144) of the motor compartment. The outer portion is exposed to the stator. One or more passages (150) are positioned to draw fluid from the gap in the first condition.

No. of Pages : 18 No. of Claims : 20

(12) PATENT APPLICATION PUBLICATION
(19) INDIA
(22) Date of filing of Application :11/11/2013
(21) Application No.9699/DELNP/2013 A
(43) Publication Date : 19/12/2014

(54) Title of the invention : INK WIPING SYSTEM FOR AN INTAGLIO PRINTING PRESS

(51) International classification :B41F9/10
(31) Priority Document No :11166854.7
(32) Priority Date :20/05/2011
(33) Name of priority country :EPO
(86) International Application No :PCT/IB2012/052416
Filing Date :15/05/2012
(87) International Publication No :WO 2012/160478
(61) Patent of Addition to Application Number :NA
Filing Date :NA
(62) Divisional to Application Number :NA
Filing Date :NA

(71)**Name of Applicant :**
1)KBA NotaSys SA
Address of Applicant :PO Box 347 55 Avenue du Grey CH 1000 Lausanne 22 Switzerland
(72)**Name of Inventor :**
1)CLAUDE Laurent
2)MERMINOD Antoine

(57) Abstract :
There is described an ink wiping system (100) for an intaglio printing press comprising a wiping tank (101) and a rotatable wiping roller assembly (102) positioned on and partly located in the wiping tank (101) to wipe excess ink from the surface of a rotatable intaglio printing cylinder (80) of the intaglio printing press. The ink wiping system (100) comprises a supporting mechanism (200) coupled to the wiping roller assembly (102) and designed to move the wiping roller assembly (102) between a working position where the wiping roller assembly (102) is positioned on and partly located in the wiping tank (101) for cooperation with the intaglio printing cylinder (80) and a maintenance position where the wiping roller assembly (102) is moved out of the wiping tank (101) and away from the intaglio printing cylinder (80). Preferably the wiping roller assembly (102) comprises a rotatable hollow cylindrical body (110) having an outer surface (110a) positioned to wipe the surface of the intaglio printing cylinder (80).

No. of Pages : 43 No. of Claims : 18

(12) PATENT APPLICATION PUBLICATION
(19) INDIA
(22) Date of filing of Application :08/11/2013

(21) Application No.9629/DELNP/2013 A
(43) Publication Date : 19/12/2014

(54) Title of the invention : TERMINAL BASED ON CONDITIONAL ACCESS TECHNOLOGY

(51) International classification	:H04N21/4623,H04N21/4367,H04N21/434
(31) Priority Document No	:201110089520.0
(32) Priority Date	:11/04/2011
(33) Name of priority country	:China
(86) International Application No	:PCT/CN2012/073651
Filing Date	:09/04/2012
(87) International Publication No	:WO 2012/139481
(61) Patent of Addition to Application Number	:NA
Filing Date	:NA
(62) Divisional to Application Number	:NA
Filing Date	:NA

(71)**Name of Applicant :**
1)UNITEND TECHNOLOGIES INC.
Address of Applicant :22nd Floor Qingyundangdai Building No.43 Beisanhuan Xilu Haidian District Beijing 100086 China
(72)**Name of Inventor :**
1)WANG Xingjun

(57) Abstract :
The present invention provides a terminal based on a Conditional Access (CA) technology. The terminal comprises a tuner a security chip and a digital television terminal main chip. The tuner is used to receive cable television broadcast data through a cable of a cable television and transmit the received cable television broadcast data to the security chip. The security chip stores key information required by CA and is used to extract stream media of a program to be played from the received cable television broadcast data descramble the stream media according to the stored key information required by the CA encrypt the descrambled stream media and transmit the encrypted stream media to the digital television terminal main chip. The digital television terminal main chip is used to decrypt the received encrypted stream media decode the decrypted stream media to obtain audio and video data and output the audio and video data. With a low cost the solution in the present invention can significantly improve the security of a Conditional Access System (CAS).

No. of Pages : 18 No. of Claims : 12

(12) PATENT APPLICATION PUBLICATION
(19) INDIA
(22) Date of filing of Application :08/11/2013
(21) Application No.9631/DELNP/2013 A
(43) Publication Date : 19/12/2014

(54) Title of the invention : A BLEND COMPOSITION FLEXIBLE TUBING MATERIAL AND METHOD OF MAKING THE BLEND

(51) International classification	:C08L101/00,C08L53/00,C08L67/04
(31) Priority Document No	:61/478798
(32) Priority Date	:25/04/2011
(33) Name of priority country	:U.S.A.
(86) International Application No	:PCT/US2012/035068
Filing Date	:25/04/2012
(87) International Publication No	:WO 2012/149071
(61) Patent of Addition to Application Number	:NA
Filing Date	:NA
(62) Divisional to Application Number	:NA
Filing Date	:NA

(71)**Name of Applicant :**
1)SAINT GOBAIN PERFORMANCE PLASTICS CORPORATION
Address of Applicant :1199 South Chillicothe Road Aurora Ohio 44202 U.S.A.
2)UNIVERSITY OF MASSACHUSETTS
(72)**Name of Inventor :**
1)HSU Shaw Ling
2)RATHI Sahas
3)COUGHLIN Edward Bryan
4)CHEN Xiaolang
5)GOLUB Charles S.
6)TZIVANIS Michael J.
7)ZIMMERMAN Michael A.
8)ORF Nicholas
9)LAI Choung H.

(57) Abstract :
A composition includes a blend of (a) a multi block copolymer including at least one block of an elastomeric polymer and at least one block of a first polymer including a chiral polymer having a stereo isomeric configuration; and (b) a second polymer including an anti chiral polymer corresponding to the chiral polymer in (a) wherein the second polymer includes an opposite handed stereo isomeric configuration to the chiral polymer in (a); wherein the blend of the chiral polymer and the anti chiral polymer form stereo complex sites. A flexible tubing material further includes the blend. In an embodiment a method of making the blend material is also provided.

No. of Pages : 31 No. of Claims : 49

(12) PATENT APPLICATION PUBLICATION
(19) INDIA
(22) Date of filing of Application :08/11/2013
(21) Application No.9632/DELNP/2013 A
(43) Publication Date : 19/12/2014

(54) Title of the invention : SYSTEM AND METHOD FOR IMPLEMENTING A DIAGNOSTIC SOFTWARE TOOL

(51) International classification :G06F7/00
(31) Priority Document No :61/482683
(32) Priority Date :05/05/2011
(33) Name of priority country :U.S.A.
(86) International Application No :PCT/US2012/035969
Filing Date :01/05/2012
(87) International Publication No :WO 2012/151194
(61) Patent of Addition to Application Number :NA
Filing Date :NA
(62) Divisional to Application Number :NA
Filing Date :NA

(71)**Name of Applicant :**
1)MASON Roger Alan
Address of Applicant :426 E. Burnett Street Dumas AR 71639 U.S.A.
(72)**Name of Inventor :**
1)MASON Roger Alan

(57) Abstract :
Embodiments of the invention are directed toward a computer implemented interactive diagnostic medical records system operated in conjunction with at least one user device. Interactive processing components provide collaborative interaction between a user and at least one database the collaboration including deployment of a search module in response to a query associated with the user device and a diagnostic inquiry module comprising an interactive sequence of at least two linked inquiries transmitted to the user device. In one embodiment the diagnostic inquiry module is operable to assign a value or weight to the user responses to the interactive sequence of at least two linked inquiries. User interface tools may further be associated with the user device for accepting input from the diagnostic inquiry module and correspondingly displaying output as determined by the interactive processing components.

No. of Pages : 33 No. of Claims : 20

(12) PATENT APPLICATION PUBLICATION
(19) INDIA
(22) Date of filing of Application :18/11/2013
(21) Application No.9854/DELNP/2013 A
(43) Publication Date : 19/12/2014

(54) Title of the invention : EXHAUST GAS TURBOCHARGER

(51) International classification :F02B39/00,F01D25/16,F01D25/24
(31) Priority Document No :10 2011 101 057.6
(32) Priority Date :10/05/2011
(33) Name of priority country :Germany
(86) International Application No :PCT/US2012/035433
Filing Date :27/04/2012
(87) International Publication No :WO 2012/154424
(61) Patent of Addition to Application Number :NA
Filing Date :NA
(62) Divisional to Application Number :NA
Filing Date :NA

(71)**Name of Applicant :**
1)BORGWARNER INC.
Address of Applicant :Patent Department 3850 Hamlin Road Auburn Hills Michigan 48326 U.S.A.
(72)**Name of Inventor :**
1)HEMER Josef Hans
2)SCHMITT Uwe
3)SCHUMNIG Oliver

(57) Abstract :
The present invention relates to an exhaust gas turbocharger (1) having a turbine (2); having a compressor (3); and having a bearing housing (4) which is arranged between the turbine (2) and the compressor (3) and a compressor side flange (5) of which adjoins the compressor (3) wherein a heat throttle (6 6) is arranged in the compressor side flange (5) of the bearing housing (4).

No. of Pages : 11 No. of Claims : 12

(12) PATENT APPLICATION PUBLICATION
(19) INDIA
(22) Date of filing of Application :14/11/2013
(21) Application No.9818/DELNP/2013 A
(43) Publication Date : 19/12/2014

(54) Title of the invention : CONTROL CIRCUIT AND METHOD FOR TESTING A MEMORY ELEMENT

(51) International classification :G06F13/16,G11C29/00
(31) Priority Document No :13/102975
(32) Priority Date :06/05/2011
(33) Name of priority country :U.S.A.
(86) International Application No :PCT/US2012/036399
Filing Date :03/05/2012
(87) International Publication No :WO 2012/154512
(61) Patent of Addition to Application Number :NA
Filing Date :NA
(62) Divisional to Application Number :NA
Filing Date :NA

(71)**Name of Applicant :**
1)ADVANCED MICRO DEVICES INC.
Address of Applicant :One AMD Place P.O. Box 3453 Sunnyvale CA 94088 U.S.A.
(72)**Name of Inventor :**
1)HOUSTY Oswin E.
2)BAUTISTA Harold H.
3)SEARLES Shawn

(57) Abstract :
Techniques and structures are disclosed in which memory training for DDR or other memory can be performed more rapidly. A memory controller is configured so that one or more memory parameters (e.g. timing delay) can be determined for one or more hardware elements such as delay locked loops (DLLs). Training may be performed without intermediation by (or reporting of results to) a system BIOS. Thus training may be performed fully in hardware. Voltage training techniques are also disclosed.

No. of Pages : 24 No. of Claims : 20

(12) PATENT APPLICATION PUBLICATION
(19) INDIA
(22) Date of filing of Application :14/11/2013
(21) Application No.9819/DELNP/2013 A
(43) Publication Date : 19/12/2014

(54) Title of the invention : EFFICIENT TAG STORAGE FOR LARGE DATA CACHES

(51) International classification :G06F12/08
(31) Priority Document No :13/104865
(32) Priority Date :10/05/2011
(33) Name of priority country :U.S.A.
(86) International Application No :PCT/US2012/037178
Filing Date :09/05/2012
(87) International Publication No :WO 2012/154895
(61) Patent of Addition to Application Number :NA
Filing Date :NA
(62) Divisional to Application Number :NA
Filing Date :NA

(71)**Name of Applicant :**
1)ADVANCED MICRO DEVICES INC.
Address of Applicant :One AMD Place P.O. Box 3453 Sunnyvale California 94088 U.S.A.
(72)**Name of Inventor :**
1)CHUNG Jaewoong
2)SOUNDARARAJAN Niranjan

(57) Abstract :
An apparatus method and medium are disclosed for implementing data caching in a computer system. The apparatus comprises a first data cache a second data cache and cache logic. The cache logic is configured to cache memory data in the first data cache. Caching the memory data in the first data cache comprises storing the memory data in the first data cache and storing in the second data cache but not in the first data cache tag data corresponding to the memory data.

No. of Pages : 32 No. of Claims : 23

(12) PATENT APPLICATION PUBLICATION
(19) INDIA
(22) Date of filing of Application :18/11/2013
(21) Application No.9861/DELNP/2013 A
(43) Publication Date : 19/12/2014

(54) Title of the invention : TORQUE SUPPORT FOR A CONVERTER DRIVE

(51) International classification :F16F15/02,F16M7/00
(31) Priority Document No :A 754/2011
(32) Priority Date :24/05/2011
(33) Name of priority country :Austria
(86) International Application No :PCT/EP2012/059123
Filing Date :16/05/2012
(87) International Publication No :WO 2012/159951
(61) Patent of Addition to Application Number :NA
Filing Date :NA
(62) Divisional to Application Number :NA
Filing Date :NA

(71)**Name of Applicant :**
1)SIEMENS VAI METALS TECHNOLOGIES GMBH
Address of Applicant :Turmstrae 44 A 4031 Linz Austria
(72)**Name of Inventor :**
1)WIMMER Gerald
2)VORABERGER Bernhard

(57) Abstract :
The invention relates to a torque support for drives riding on shaft journals in particular for converter drives comprising a transmission housing supported on a shaft journal to be driven wherein the transmission housing encloses a transmission. The torque support comprises at least two push rods which are preferably arranged symmetrically with respect to the rotational axis of the shaft journal to be driven and which are each fastened to the transmission housing at the upper ends of the push rods. The lower ends of the push rods are each connected to a torsion shaft by means of a respective lever. The torsion shaft is fastened to a foundation by means of torsion shaft bearings. At least one damping device is present which acts on at least one of the levers and on the foundation or acts on the transmission housing and on the foundation or acts on at least one lever extension of a lever and on the transmission housing and is arranged parallel to the push rod acting on said lever.

No. of Pages : 23 No. of Claims : 7

(12) PATENT APPLICATION PUBLICATION
(19) INDIA
(22) Date of filing of Application :18/11/2013
(21) Application No.9862/DELNP/2013 A
(43) Publication Date : 19/12/2014

(54) Title of the invention : METHOD FOR COOLING A METALLIC STRAND AND SWITCHING VALVE FOR INTERMITTENTLY PERMITTING AND SHUTTING OFF A VOLUME FLOW OF A COOLING MEDIUM

(51) International classification :B22D11/124,B22D11/22,B05B1/08
(31) Priority Document No :11167869.4
(32) Priority Date :27/05/2011
(33) Name of priority country :EPO
(86) International Application No :PCT/EP2012/059942
Filing Date :29/05/2012
(87) International Publication No :WO 2012/163878
(61) Patent of Addition to Application Number :NA
Filing Date :NA
(62) Divisional to Application Number :NA
Filing Date :NA

(71)**Name of Applicant :**
1)SIEMENS VAI METALS TECHNOLOGIES GMBH
Address of Applicant :Turmstrae 44 A 4031 Linz Austria
(72)**Name of Inventor :**
1)LADNER Peter
2)MAIRHOFER Markus
3)SCHEIDL Rudolf
4)WAHL Helmut

(57) Abstract :
vice versaThe invention relates to a method for cooling a metallic strand in a strand guide of a strand casting machine and to a switching valve for intermittently permitting and shutting off a volume flow of a cooling medium. The problem addressed by the invention is that of specifying a method for cooling a metallic strand in a strand guide and a switching valve for intermittently permitting and shutting off a volume flow of a cooling medium by means of which the cooling intensity can be adjusted over a broad range in a simple robust and energy efficient manner. Said problem is solved by means of the following method steps: actively controlling a switchable switching valve (1) by means of a binary control signal (5) wherein the control is imparted as a function of a desired cooling power; actuating a switching element (16) of the switching valve as a function of the control signal (5) wherein the switching element (16) is moved from a closed position into an open position or as a function of the control signal (5) and the throughflow of a cooling medium (21) through the switching valve (1) is permitted when the switching element (16) is in an open position and is shut off when the switching element (16) is in a closed position; and subsequently intermittently discharging the cooling medium (21) onto the strand (3) via a cooling nozzle (2).

No. of Pages : 32 No. of Claims : 24

(12) PATENT APPLICATION PUBLICATION
(19) INDIA
(22) Date of filing of Application :13/11/2013
(21) Application No.9762/DELNP/2013 A
(43) Publication Date : 19/12/2014

(54) Title of the invention : NOZZLE BLADE

(51) International classification :F01D17/16,F02B37/24
(31) Priority Document No :2011118104
(32) Priority Date :26/05/2011
(33) Name of priority country :Japan
(86) International Application No :PCT/JP2012/063385
Filing Date :24/05/2012
(87) International Publication No :WO 2012/161280
(61) Patent of Addition to Application Number :NA
Filing Date :NA
(62) Divisional to Application Number :NA
Filing Date :NA

(71)**Name of Applicant :**
1)IHI Corporation
Address of Applicant :1 1 Toyosu 3 chome Koto ku Tokyo 1358710 Japan
(72)**Name of Inventor :**
1)MORITA Isao

(57) Abstract :
This relates to a nozzle blade in which the leading edge shape has a curved-line shape that is formed by the distance from the rotation axis of the nozzle blade to the leadmg edge changing depending on the nozzle blade height position, and the trailing edge shape has a straight-line shape that is formed by the distance from the rotation axis of the nozzle blade to the trailing edge being constant irrespective of the nozzle blade height position.

No. of Pages : 31 No. of Claims : 3

(12) PATENT APPLICATION PUBLICATION
(19) INDIA
(22) Date of filing of Application :13/11/2013
(21) Application No.9763/DELNP/2013 A
(43) Publication Date : 19/12/2014

(54) Title of the invention : PERSONAL CARE COMPOSITIONS

(51) International classification :A61K8/60,A61Q19/10
(31) Priority Document No :61/495543
(32) Priority Date :10/06/2011
(33) Name of priority country :U.S.A.
(86) International Application No :PCT/US2012/041499
Filing Date :08/06/2012
(87) International Publication No :WO 2012/170784
(61) Patent of Addition to Application Number :NA
Filing Date :NA
(62) Divisional to Application Number :NA
Filing Date :NA

(71)**Name of Applicant :**
1)THE PROCTER & GAMBLE COMPANY
Address of Applicant :One Procter & Gamble Plaza Cincinnati Ohio 45202 U.S.A.
(72)**Name of Inventor :**
1)WEI Karl Shiqing
2)STELLA Qing
3)ARREDONDO Victor Manuel
4)JI Wei
5)BELCHER William Randall
6)TIREY Debra Ann
7)MENON Elton Luis

(57) Abstract :
A personal care composition includes a cleansing phase and a benefit phase. The cleansing phase includes a surfactant and the benefit phase includes a benefit agent where the benefit agent comprises a sucrose polyester with an iodine value of 3 or more.

No. of Pages : 41 No. of Claims : 14

(12) PATENT APPLICATION PUBLICATION
(19) INDIA
(22) Date of filing of Application :13/11/2013
(21) Application No.9764/DELNP/2013 A
(43) Publication Date : 19/12/2014

(54) Title of the invention : COMMUNICATIONS CONTROL DEVICE COMMUNICATIONS CONTROL METHOD PROGRAM COMMUNICATIONS SYSTEM AND WIRELESS TERMINAL

(51) International classification :H04W28/16,H04W16/28,H04W84/10
(31) Priority Document No :2011113674
(32) Priority Date :20/05/2011
(33) Name of priority country :Japan
(86) International Application No :PCT/JP2012/060330
Filing Date :17/04/2012
(87) International Publication No :WO 2012/160906
(61) Patent of Addition to Application Number :NA
Filing Date :NA
(62) Divisional to Application Number :NA
Filing Date :NA

(71)**Name of Applicant :**
1)SONY CORPORATION
Address of Applicant :1 7 1 Konan Minato ku Tokyo 1080075 Japan
(72)**Name of Inventor :**
1)KIMURA Ryota

(57) Abstract :
There is provided a communication control apparatus including a communication controller that controls cooperative communication linked to other 5 communication control apparatuses depending on whether the communication control apparatus or the other communication control apparatuses perform terminal grouping to distinguish an operation to a specific wireless terminal and to other wireless terminals.

No. of Pages : 83 No. of Claims : 15

(12) PATENT APPLICATION PUBLICATION
(19) INDIA
(22) Date of filing of Application :13/11/2013
(21) Application No.9765/DELNP/2013 A
(43) Publication Date : 19/12/2014

(54) Title of the invention : IMPROVED DEPTH FILTERS FOR DISPOSABLE BIOTECHNOLOGICAL PROCESSES

(51) International classification :C12M1/12,B01D39/08,B01D29/01
(31) Priority Document No :61/571994
(32) Priority Date :08/07/2011
(33) Name of priority country :U.S.A.
(86) International Application No :PCT/US2012/044806
Filing Date :29/06/2012
(87) International Publication No :WO 2013/009491
(61) Patent of Addition to Application Number :NA
Filing Date :NA
(62) Divisional to Application Number :NA
Filing Date :NA

(71)**Name of Applicant :**
1)EMD MILLIPORE CORPORATION
Address of Applicant :290 Concord Road Billerica Massachusetts 01821 U.S.A.
(72)**Name of Inventor :**
1)SINGH Nripen
2)CHENG Kwok Shun

(57) Abstract :
A process for the primary clarification of feeds including chemically treated flocculated feeds containing the target biomolecules of interest such as mAbs mammalian cell cultures or bacterial cell cultures using a primary clarification depth filtration device without the use of a primary clarification centrifugation step or a primary clarification tangential flow microfiltration step. The primary clarification depth filtration device contains a porous depth filter having graded porous layers of varying pore ratings. The primary clarification depth filtration device filters fluid feeds including chemically treated flocculated feeds containing flocculated cellular debris and colloidal particulates having a particle size distribution of approximately about 0.5 pm to 200 pm at a flow rate of about 10 litres/m2/hr to about 100 litres/m2/hr. Kits and methods of using and making the same are also provided.

No. of Pages : 90 No. of Claims : 46

(12) PATENT APPLICATION PUBLICATION
(19) INDIA
(22) Date of filing of Application :13/11/2013
(21) Application No.9766/DELNP/2013 A
(43) Publication Date : 19/12/2014

(54) Title of the invention : CELLULOSE ETHER COMPOUNDS FOR IMPROVED HOT TEMPERATURE PERFORMANCE IN EXTERNAL INSULATION FINISHING SYSTEMS (EIFS) MORTARS

(51) International classification :C04B24/38,C04B28/02
(31) Priority Document No :61/520383
(32) Priority Date :09/06/2011
(33) Name of priority country :U.S.A.
(86) International Application No :PCT/US2012/041308
Filing Date :07/06/2012
(87) International Publication No :WO 2012/170666
(61) Patent of Addition to Application Number :NA
Filing Date :NA
(62) Divisional to Application Number :NA
Filing Date :NA

(71)**Name of Applicant :**
1)HERCULES INCORPORATED
Address of Applicant :500 Hercules Road Wilmington DE 19808 U.S.A.
(72)**Name of Inventor :**
1)HOHN Wilfried Adolf
2)RENNERT Brigitte
3)WUNDERLICH Martin
4)DITTEL Michael
5)YOUNG Teng Shau

(57) Abstract :
The present invention relates to mortars which include a blend of cellulose ether compounds and exhibit improved pot life water retention capability and open time as well as high tensile strength values. These mortars can be used in the fabrication of external insulation finishing systems (EIFS) particularly in hot environments. The cellulose ether blend includes hydroxyethylcellulose ether and methylhydroxyethylcellulose ether. Water soluble anionic polyacrylamide and hydroxypropyl starch can also be added to the mortar.

No. of Pages : 22 No. of Claims : 13

(12) PATENT APPLICATION PUBLICATION
(19) INDIA
(22) Date of filing of Application :13/11/2013
(21) Application No.9767/DELNP/2013 A
(43) Publication Date : 19/12/2014

(54) Title of the invention : METHODS FOR THE PRODUCTION OF CLAD STEEL PRODUCTS

(51) International classification :B21J1/02,B21C33/00,B23K20/00
(31) Priority Document No :592302
(32) Priority Date :18/04/2011
(33) Name of priority country :New Zealand
(86) International Application No :PCT/GB2012/000325
Filing Date :05/04/2012
(87) International Publication No :WO 2012/143668
(61) Patent of Addition to Application Number :NA
Filing Date :NA
(62) Divisional to Application Number :NA
Filing Date :NA

(71)**Name of Applicant :**
1)CLADINOX INTERNATIONAL LIMITED
Address of Applicant :Suite 9 Ansuya Estate Revolution Avenue Victoria Seychelles
(72)**Name of Inventor :**
1)CACACE Antonino Giorgio

(57) Abstract :
A method is disclosed of producing a billet (B14e) which can be heated and rolled or otherwise worked with conventional equipment to form a product with a steel core and a cladding of an alloy comprising stainless steel nickel chrome nickel copper or copper nickel. For a product such as corrosion resistant reinforcing bar the billet (B14e) comprises a solid steel core (C) which is inserted in a tube (J) of the alloy and on which swaging operations are carried out to cause the transverse size of discrete portions of the tube to decrease. The swaging operations may be carried out on the part of the tube that has an interface with the steel body. This can cause the length of the tube to increase and can also cause the transverse size of the steel body at the interface to be decreased. To prevent oxidation of chrome and other metals in the tube one or more briquettes (E E E) of scavenging metal such as aluminium or titanium are inserted in the parts of the tube that project clear of an end of the core. These parts are then inwardly swaged and sealed by welding or the like before the billet is heated. To produce a tubular product the core has a bore which houses a second metal tube. In this case either or both of the tubes can be composed of the alloy.

No. of Pages : 52 No. of Claims : 18

(12) PATENT APPLICATION PUBLICATION
(19) INDIA
(22) Date of filing of Application :13/11/2013
(21) Application No.9775/DELNP/2013 A
(43) Publication Date : 19/12/2014

(54) Title of the invention : RAIL VEHICLE BODY SHELL AND METHOD FOR MANUFACTURING SAME

(51) International classification :B61D17/04
(31) Priority Document No :10 2011 075 277.3
(32) Priority Date :04/05/2011
(33) Name of priority country :Germany
(86) International Application No :PCT/EP2012/055208
Filing Date :23/03/2012
(87) International Publication No :WO 2012/150091
(61) Patent of Addition to Application Number :NA
Filing Date :NA
(62) Divisional to Application Number :NA
Filing Date :NA

(71)**Name of Applicant :**
1)BOMBARDIER TRANSPORTATION GMBH
Address of Applicant :Schneberger Ufer 1 10785 Berlin Germany
(72)**Name of Inventor :**
1)LIESENBERG Burkhart
2)FRIEDRICH Mario
3)BECKER Birgit
4)RITSCHEL Heiko

(57) Abstract :
The invention relates to a method for manufacturing a car body shell of a rail vehicle comprising the steps: preparation of a bogie (60), production of outer wall modules (1) according to a tailored blank method, in which cut-to-size pieces of sheet metal (10, 11) with different material properties are joined to one another in a butt-jointed fashion by means of laser welding to form a side wall face, with the result that an outer face (18) of the side wall face is produced without material discontinuities at the joints and wherein, when the outer wall modules (1) are produced on an inner side (17) of the side wall face, a framework structure (4) formed from framework profiles (5, 5a, 5b) is attached, joining of a plurality of outer wall modules (1) together to form at least one central side wall section (81), wherein the outer wall modules (1) are joined to one another in a butt-jointed fashion by means of laser welding without an offset occurring at the joints in the outer face (18a) of the side wall section (81), attachment of at least the central side wall section (81) and, if appropriate, of outer wall modules (1) embodied as side wall modules (94) and, if appropriate, front end modules on the bogie (60), and joining the roof elements (71, 72), wherein the step of producing an outer wall module (1) comprises joining a bent upper chord profile (2) to the side wall face, wherein the upper chord profile (2) terminates an upper edge of the outer wall module and is joined, in a butt-jointed fashion by means of laser welding, to adjacent pieces of the pieces of sheet metal (10, 11) with different material properties, without a material discontinuity occurring at the outer face (18) of the side wall face, wherein the upper chord profile (2) comprises a profile section (42) which is bent with respect to the outer face (18) of the side wall face towards the inside (17) of the outer wall module (1), and wherein, in the step of joining the framework structure (4) to the inside (17) of the side wall face, the framework structure profiles (5, 5a, 5b) are attached by end-side abutment edges (19, 20, 21) to the inside (17) of the side wall face including the upper chord profile by means of T joints and are fastened in a materially joined fashion by means of laser weld seams (13). The invention also relates to a car body shell and to an outer wall module.

No. of Pages : 57 No. of Claims : 14

(12) PATENT APPLICATION PUBLICATION
(19) INDIA
(22) Date of filing of Application :13/11/2013
(21) Application No.9776/DELNP/2013 A
(43) Publication Date : 19/12/2014

(54) Title of the invention : COMBINED TAP AND HAND DRYER

(51) International classification :A47K10/48,E03C1/04
(31) Priority Document No :1108240.1
(32) Priority Date :17/05/2011
(33) Name of priority country :U.K.
(86) International Application No :PCT/GB2012/051098
Filing Date :16/05/2012
(87) International Publication No :WO 2012/156737
(61) Patent of Addition to Application Number :NA
Filing Date :NA
(62) Divisional to Application Number :NA
Filing Date :NA

(71)**Name of Applicant :**
1)DYSON TECHNOLOGY LIMITED
Address of Applicant :Tetbury Hill Malmesbury Wiltshire SN16 0RP U.K.
(72)**Name of Inventor :**
1)COURTNEY Stephen
2)MOLONEY Patrick
3)LESNIOWSKI Christopher

(57) Abstract :
A dual purpose fixture for a sink (1) or wash basin incorporating both a water tap and a hand dryer. The water tap has a spout (10) arranged to project over the basin of the sink and the hand dryer incorporates two or more hand dryer nozzles (14 16 26 28 140 160) at least one for each of a user s hands. The left hand nozzle (14) is located on the left hand side of the spout and the right hand nozzle (16) is located on the right hand side of the spout specifically so that the spout acts as a dividing partition between the two hand dryer nozzles. This encourages correct usage of the hand dryer. The fixture may be fitted to a sink or wall mounted above the sink.

No. of Pages : 27 No. of Claims : 15

(12) PATENT APPLICATION PUBLICATION
(19) INDIA
(22) Date of filing of Application :13/11/2013
(21) Application No.9778/DELNP/2013 A
(43) Publication Date : 19/12/2014

(54) Title of the invention : POLYMER BONDED QUATERRYLENE AND/OR TERRYLENE DYES AND COMPOSITIONS CONTAINING SAME

(51) International classification :C09D11/00,C09D11/02,B41M3/14
(31) Priority Document No :11167522.9
(32) Priority Date :25/05/2011
(33) Name of priority country :EPO
(86) International Application No :PCT/EP2012/059795
Filing Date :25/05/2012
(87) International Publication No :WO 2012/160182
(61) Patent of Addition to Application Number :NA
Filing Date :NA
(62) Divisional to Application Number :NA
Filing Date :NA

(71)**Name of Applicant :**
1)SICPA HOLDING SA
Address of Applicant :Av. de Florissant 41 CH 1008 Prilly Switzerland
(72)**Name of Inventor :**
1)TILLER Thomas
2)COMMEUREUC Aurlien
3)PASQUIER Ccile

(57) Abstract :
The invention provides a method of increasing the solubility and/or dispersibility of a quaterrylene and/or terrylene dye in a liquid medium such as e.g. a liquid medium comprised in a printing ink composition. The method comprises covalently binding the quaterrylene and/or terrylene dye to a polymer which is soluble in the liquid medium. The invention also provides a printing ink composition which comprises a polar liquid medium that has at least one polymer covalently bonded quaterrylene and/or terrylene dye of the present invention as set forth above (including the various aspects thereof) dissolved or dispersed therein. The invention also provides a marking or security feature which is made with the printing ink composition of the present invention as set forth above (including the various aspects thereof).

No. of Pages : 50 No. of Claims : 20

(12) PATENT APPLICATION PUBLICATION
(19) INDIA
(22) Date of filing of Application :14/11/2013
(21) Application No.9804/DELNP/2013 A
(43) Publication Date : 19/12/2014

(54) Title of the invention : WATER GAS SHIFT CATALYST

(51) International classification :B01J23/85,B01J23/882,B01J23/887
(31) Priority Document No :1109376.2
(32) Priority Date :06/06/2011
(33) Name of priority country :U.K.
(86) International Application No :PCT/GB2012/051157
Filing Date :22/05/2012
(87) International Publication No :WO 2012/168690
(61) Patent of Addition to Application Number :NA
Filing Date :NA
(62) Divisional to Application Number :NA
Filing Date :NA

(71)**Name of Applicant :**
1)JOHNSON MATTHEY PUBLIC LIMITED COMPANY
Address of Applicant :5th floor 25 Farringdon Street London EC4A 4AB U.K.
(72)**Name of Inventor :**
1)ABBOTT Peter Edward James
2)FOWLES Martin
3)LARA Antonio Chica
4)MACLEOD Norman
5)PEREZ Juan Jose Gonzalez
6)VASS Elaine Margaret

(57) Abstract :
A catalyst precursor for preparing a catalyst suitable for use in a sour water gas shift process is described comprising; 5 to 30% by weight of a catalytically active metal oxide selected from tungsten oxide and molybdenum oxide; 1 to 10% by weight of a promoter metal oxide selected from cobalt oxide and nickel oxide; and 1 to15% by weight of an oxide of an alkali metal selected from sodium potassium and caesium;supported on a titania catalyst support.

No. of Pages : 17 No. of Claims : 22

(12) PATENT APPLICATION PUBLICATION
(19) INDIA
(22) Date of filing of Application :14/11/2013
(21) Application No.9805/DELNP/2013 A
(43) Publication Date : 19/12/2014

(54) Title of the invention : METHOD FOR PRODUCING PYRAZOLYLCARBOXANILIDES

(51) International classification :C07D231/14,C07C231/02
(31) Priority Document No :11170685.9
(32) Priority Date :21/06/2011
(33) Name of priority country :EPO
(86) International Application No :PCT/EP2012/061739
Filing Date :19/06/2012
(87) International Publication No :WO 2012/175511
(61) Patent of Addition to Application Number :NA
Filing Date :NA
(62) Divisional to Application Number :NA
Filing Date :NA

(71)**Name of Applicant :**
1)BAYER INTELLECTUAL PROPERTY GMBH
Address of Applicant :Alfred Nobel Str. 10 40789 Monheim Germany
(72)**Name of Inventor :**
1)MORADI Wahed Ahmed
2)LUI Norbert
3)DOCKNER Michael

(57) Abstract :
The invention relates to a simplified method for producing pyrazolylcarboxanilides by reacting pyrazolyl carboxylic acid esters with anilines in the presence of a base and removing at least one reaction product.

No. of Pages : 19 No. of Claims : 15

(12) PATENT APPLICATION PUBLICATION
(19) INDIA
(22) Date of filing of Application :14/11/2013
(21) Application No.9808/DELNP/2013 A
(43) Publication Date : 19/12/2014

(54) Title of the invention : TWIST FLOW MICROFLUIDIC MIXER AND MODULE

(51) International classification :B01F13/00,B01F5/00,B01F5/02
(31) Priority Document No :61/491506
(32) Priority Date :31/05/2011
(33) Name of priority country :U.S.A.
(86) International Application No:PCT/US2012/039916
Filing Date :30/05/2012
(87) International Publication No :WO 2012/166756
(61) Patent of Addition to Application Number :NA
Filing Date :NA
(62) Divisional to Application Number :NA
Filing Date :NA

(71)**Name of Applicant :**
1)CORNING INCORPORATED
Address of Applicant :1 Riverfront Plaza Corning New York 14831 U.S.A.
(72)**Name of Inventor :**
1)CHIVILIKHIN Mikhail Sergeevich

(57) Abstract :
A MULTILAYER MICROFLUIDIC MODULE (10) CONTAINS A MICROMIXER (12) COMPRISING IN ORDER ALONG AN INTERNAL FLUID PATH (14) A FIRST FLUID CHANNEL (16) LYING WITHIN A FIRST LAYER (51) OF THE MODULE (10) ALONG A FIRST DIRECTION (15) WITH THE FIRST LAYER HAVING A LOWER BOUNDARY (21); AT LEAST ONE ADDITIONAL FLUID CHANNEL (17) LYING WITHIN THE FIRST LAYER (51) OF THE MODULE (10) ALONG AN ADDITIONAL DIRECTION (19); A FIRST INJECTION PASSAGE (20) EXTENDING FROM A FIRST INJECTION PASSAGE INLET (22) IN THE LOWER BOUNDARY (21) OF THE FIRST LAYER (51) OF THE MODULE (10) THROUGH A SECOND LAYER (52) OF THE MODULE (10) TO A FIRST INJECTION PASSAGE OUTLET (24) THE FIRST INJECTION PASSAGE INLET (22) BEING FLUIDICALLY CONNECTED TO THE FIRST FLUID CHANNEL (16) AND TO THE ADDITIONAL FLUID CHANNEL (17) EITHER INDIVIDUALLY THROUGH THE LOWER BOUNDARY (21) OF THE FIRST LAYER (51) OR VIA A MANIFOLD (25) WITHIN THE FIRST LAYER (51); AND A SECOND FLUID CHANNEL (26) LYING WITHIN A THIRD LAYER (53) OF THE MODULE (10) THE THIRD LAYER (53) HAVING AN UPPER BOUNDARY (30) THE SECOND FLUID CHANNEL HAVING A WIDTH W; WHEREIN THE FIRST DIRECTION (15) AND THE ADDITIONAL DIRECTION (19) ARE NON COLLINEAR AND WHEREIN THE FIRST INJECTION PASSAGE OUTLET (24) IS CENTERED WITHIN THE SECOND FLUID CHANNEL (26) IN THE DIRECTION OF THE WIDTH W AND HAS A LENGTH L ALONG THE SECOND FLUID CHANNEL (26) AND A WIDTH W IN THE DIRECTION OF THE WIDTH W AND WHEREIN THE WIDTH W IS NARROWER THAN THE WIDTH W AND WHEREIN THE FIRST INJECTION PASSAGE OUTLET (24) HAS A LENGTH TO WIDTH RATIO L / W OF GREATER THAN 1:1.

No. of Pages : 23 No. of Claims : 12

(12) PATENT APPLICATION PUBLICATION
(19) INDIA
(22) Date of filing of Application :14/11/2013
(21) Application No.9809/DELNP/2013 A
(43) Publication Date : 19/12/2014

(54) Title of the invention : PROCESS FOR THE PRODUCTION OF POLYURETHANE POLYUREAS CONTAINING SIDE CHAINS AND OF AQUEOUS DISPERSIONS OF THESE

(51) International classification :C08G18/08,C08G18/38,C08G71/04
(31) Priority Document No :10 2011 107 873.1
(32) Priority Date :19/07/2011
(33) Name of priority country:Germany
(86) International Application No :PCT/EP2012/002163
Filing Date :22/05/2012
(87) International Publication No :WO 2013/010606
(61) Patent of Addition to Application Number :NA
Filing Date :NA
(62) Divisional to Application Number :NA
Filing Date :NA

(71)**Name of Applicant :**
1)CLARIANT INTERNATIONAL LTD
Address of Applicant :Rothausstrasse 61 CH 4132 Muttenz Switzerland
(72)**Name of Inventor :**
1)MNTER J¼rgen

(57) Abstract :
The present invention relates to a process for the production of aqueous polyurethanepolyurea dispersions for which A) firstly Al) primary and/or secondary monoamines or diamines are reacted with A2) cyclic carbonates which contain precisely one hydroxy group, where the molar ratio of Al) and A2) is such that in the case of monoamines Al) the theoretical ratio of the entirety of the primary and secondary amine groups to the cyclic carbonate groups is from 0.8 to 1.2 and in the case of diamines Al) the theoretical ratio of the entirety of the primary and secondary amine groups to the cyclic carbonate groups is from 1.8 to 2.2, and A3) in the case of diamines Al) the remaining primary and secondary amine groups are reacted with compounds which bear precisely one functional group which reacts with primary or secondary amines in an addition reaction, in such a way that there are no resultant isocyanate-reactive groups, where the molar amount of A3) is such that the theoretical ratio of the entirety of the theoretically remaining primary and secondary amine groups after reaction of Al) and A2) to the amine-reactive groups in A3) is from 0.8 to 1.2, where the reaction with A3) can take place after, at the same time as or prior to the reaction with A2), B) then a polyurethane prepolymer containing NCO groups is produced by reaction of Bl) polyispcyanates with B2) polymeric polyols and/or polyamines with number-average molar masses of more than 400 to 8000 g/mol and B3) optionally low-molecular-weight compounds with number-average molar masses of 17-400 g/mol selected from the group consisting of mono- and polyalcohols, mono- and polyamines and aminoalcohols and B4) optionally isocyanate-reactive, ionically or potentially ionically hydrophilizing compounds and/or isocyanate-reactive non-ionically hydrophilizing compounds and B5) the reaction products of A), C) the prepolymer from B) is dispersed in water, and D) optionally the remaining free NCO groups of the prepolymer are reacted with isocyanate-reactive monoamines, polyamines, hydrazine and/or hydrazides, where the molar amount of these is such that the theoretical ratio of the isocyanate-reactive NH groups to the NCO groups is from 0 to 1.2, where the reaction D) can take place to some extent or else entirely prior to or during the dispersion step C).

No. of Pages : 31 No. of Claims : 20

(12) PATENT APPLICATION PUBLICATION
(19) INDIA
(22) Date of filing of Application :14/11/2013
(21) Application No.9816/DELNP/2013 A
(43) Publication Date : 19/12/2014

(54) Title of the invention : METHOD FOR AN ELECTROHYDRAULIC LIFTING MECHANISM CONTROL SYSTEM AND OPERATING UNIT FOR AN ELECTROHYDRAULIC LIFTING MECHANISM CONTROL SYSTEM

(51) International classification :A01B63/00,A01B79/00
(31) Priority Document No :102011101714.7
(32) Priority Date :17/05/2011
(33) Name of priority country :Germany
(86) International Application No :PCT/EP2012/002106
Filing Date :16/05/2012
(87) International Publication No :WO 2012/156085
(61) Patent of Addition to Application Number :NA
Filing Date :NA
(62) Divisional to Application Number :NA
Filing Date :NA

(71)**Name of Applicant :**
1)ROBERT BOSCH GMBH
Address of Applicant :70442 Stuttgart Germany
(72)**Name of Inventor :**
1)JESSEN Soenke
2)MAIER Uwe
3)FALKENHAIN Uwe

(57) Abstract :
The invention discloses a method for an electrohydraulic lifting mechanism control system of a mobile working machine, in particular a mobile agricultural machine, wherein, in a standby mode of the control system, a set point (52) of a first controlled variable is acquired and, according to the invention, a change is made from a standby mode to a control mode, in which the first controlled variable is controlled via an adjustment of the set point. Also disclosed is an operating unit having a control unit (3) for an electrohydraulic lifting mechanism control system of a mobile working machine, in particular a mobile agricultural machine, wherein the operating unit (3) has a set point generator (22), via which a set point of a first controlled variable of the lifting mechanism can be adjusted and, according to the invention, the operating unit (3) is configured in such a way that the control system can be activated via the set point generator (22), in particular via the adjustment of the latter.

No. of Pages : 30 No. of Claims : 15

(12) PATENT APPLICATION PUBLICATION
(19) INDIA
(22) Date of filing of Application :14/11/2013
(21) Application No.9817/DELNP/2013 A
(43) Publication Date : 19/12/2014

(54) Title of the invention : CONTROLLING THE PROCESSING OF A MULTIMEDIA OBJECT BY A SOFTWARE APPLICATION

(51) International classification :G06F17/30
(31) Priority Document No :1154983
(32) Priority Date :08/06/2011
(33) Name of priority country :France
(86) International Application No :PCT/EP2012/060803
Filing Date :07/06/2012
(87) International Publication No :WO 2012/168367
(61) Patent of Addition to Application Number :NA
Filing Date :NA
(62) Divisional to Application Number :NA
Filing Date :NA

(71)**Name of Applicant :**
1)ALCATEL LUCENT
Address of Applicant :3 avenue Octave Grard F 75007 Paris France
(72)**Name of Inventor :**
1)AGHASARYAN Armen
2)KAMGA Guy Bertrand
3)BOUZID Makram
4)DUPONT Marie Pascale

(57) Abstract :
To control the processing of a multimedia object (OM) by a software application (AppL) implemented within a communication device (DC) a control application (AC) implemented in the communication device intercepts a call from the software application to an execution environment (EE) to carry out a basic operation on the multimedia object the multimedia object being divided into segments each associated with control data (DonC) comprising at least some data from among semantic data (DonSm) sensitivity data (DonSb) and functionality data (DonF) associates transformation parameters (ParT) comprising at least one functionality parameter (ParF) and at least one semantic parameter (ParSm) and one sensitivity parameter (ParSb) with the call depending upon the context in which the call is executed. The control application transforms the multimedia object into a transformed multimedia object (OMt) based on the control data (DonC) associated with the multimedia object and the transformation parameters (ParT) associated with the call the transformed multimedia object comprising at least one transformed segment such that the transformed multimedia object presents less information than the multimedia object and is capable of undergoing a basic operation carried out by the execution environment.

No. of Pages : 20 No. of Claims : 11

(12) PATENT APPLICATION PUBLICATION
(19) INDIA
(22) Date of filing of Application :18/11/2013
(21) Application No.9863/DELNP/2013 A
(43) Publication Date : 19/12/2014

(54) Title of the invention : MOTOR VEHICLE HAVING FOLDING SEATS

(51) International classification :B60N2/005,B60N2/01,B60N2/015
(31) Priority Document No :1101916
(32) Priority Date :21/06/2011
(33) Name of priority country :France
(86) International Application No :PCT/FR2012/051133
Filing Date :22/05/2012
(87) International Publication No :WO 2012/175832
(61) Patent of Addition to Application Number :NA
Filing Date :NA
(62) Divisional to Application Number :NA
Filing Date :NA

(71)**Name of Applicant :**
1)RENAULT SAS
Address of Applicant :13 15 Quai le Gallo F 92100 Boulogne Billancourt France
(72)**Name of Inventor :**
1)MARTEL Michel
2)MERCIER Cedric
3)PEREZ Jean Claude

(57) Abstract :
The invention relates to a motor vehicle comprising a chassis on which three rows (10 30 50) of seats are mounted including: at least one front seat (11); at least one middle seat (31) which is capable of being folded down and which is movably mounted on the chassis between a use position and a storage position in which it is folded down against the front seat; and at least one rear seat (51) which is capable of being folded and which can be separated from the chassis. According to the invention the motor vehicle comprises stowage means (62) for locking the rear seat against the middle seat and in a storage position when said rear seat is folded and separated from the chassis.

No. of Pages : 21 No. of Claims : 10

(12) PATENT APPLICATION PUBLICATION
(19) INDIA
(22) Date of filing of Application :18/11/2013
(21) Application No.9864/DELNP/2013 A
(43) Publication Date : 19/12/2014

(54) Title of the invention : HIGH CARBON THIN STEEL SHEET AND METHOD FOR PRODUCING SAME

(51) International classification :C22C38/00,B21B3/00,C21D9/46
(31) Priority Document No :2011110917
(32) Priority Date :18/05/2011
(33) Name of priority country :Japan
(86) International Application No :PCT/JP2012/003193
Filing Date :16/05/2012
(87) International Publication No :WO 2012/157267
(61) Patent of Addition to Application Number :NA
Filing Date :NA
(62) Divisional to Application Number :NA
Filing Date :NA

(71)**Name of Applicant :**
1)JFE STEEL CORPORATION
Address of Applicant :2 3 Uchisaiwai cho 2 chome Chiyoda ku Tokyo 1000011 Japan
(72)**Name of Inventor :**
1)KOBAYASHI Takashi
2)NAKAMURA Nobuyuki
3)FUNAKAWA Yoshimasa

(57) Abstract :
This high carbon thin steel sheet is characterized by: having a chemical composition containing by mass% 0.20 0.50% of C no more than 1.0% of Si no more than 2.0% of Mn no more than 0.03% of P no more than 0.02% of S no more than 0.08% of sol. Al and no more than 0.02% of N the remainder comprising Fe and unavoidable impurities; having a microstructure comprising ferrite and cementite; of the ferrite the fraction of pro eutectoid ferrite in the entire steel structure being at least 20% and less than 50%; the average grain size (dc) of the cementite in the region from the position that is 1/4 of the thickness of the steel sheet to the center of sheet thickness being 0.50 1.5 μm; and the average grain size (ds) of the cementite in the region from the surface to the position that is 1/4 of the thickness of the steel sheet satisfying the relationship ds/dc = 0.8.

No. of Pages : 34 No. of Claims : 11

(12) PATENT APPLICATION PUBLICATION
(19) INDIA
(22) Date of filing of Application :31/10/2013
(21) Application No.9397/DELNP/2013 A
(43) Publication Date : 19/12/2014

(54) Title of the invention : INTERNAL COMBUSTION ENGINE CONTROL APPARATUS AND METHOD

(51) International classification :F02D21/08,F02D23/00
(31) Priority Document No :2011-142512
(32) Priority Date :28/06/2011
(33) Name of priority country :Japan
(86) International Application No :PCT/JP2012/051893
Filing Date :27/01/2012
(87) International Publication No :WO 2013/001844
(61) Patent of Addition to Application Number :NA
Filing Date :NA
(62) Divisional to Application Number :NA
Filing Date :NA

(71)**Name of Applicant :**
1)MITSUBISHI HEAVY INDUSTRIES LTD.
Address of Applicant :16 5 Konan 2 chome Minato ku Tokyo 1088215 Japan
(72)**Name of Inventor :**
1)IDE Kazunari
2)HIROE Takaharu
3)KUBO Hiroyoshi
4)YAMADA Tomohide

(57) Abstract :
A control apparatus 57 is a 2-input, 2-output integral-type optimal servo system in which intake air amount and intake oxygen concentration are used as control quantities (yl, y2) and the degree of opening of a control valve of an exhaust gas recirculation apparatus and the degree of opening of a control valve of a supercharger equipped with a variable flow rate mechanism are used as manipulated quantities (ul, u2), and includes an output feedback system. The control apparatus (57) is provided with an EGR valve opening degree unit (70) and an opening rate valve of the supercharger. Each of the control units includes a non-interference controller (64) for eliminating interference between the manipulated quantity for the control valve of the exhaust gas recirculation apparatus and the manipulated quantity for the control valve of the supercharger equipped with the variable flow rate mechanism.

No. of Pages : 35 No. of Claims : 7

(12) PATENT APPLICATION PUBLICATION
(19) INDIA
(22) Date of filing of Application :31/10/2013
(21) Application No.9398/DELNP/2013 A
(43) Publication Date : 19/12/2014

(54) Title of the invention : METHODS AND APPARATUS FOR NEIGHBOR CELL RANGE EXTENSION

(51) International classification :H04W36/22
(31) Priority Document No :61/483398
(32) Priority Date :06/05/2011
(33) Name of priority country :U.S.A.
(86) International Application No :PCT/EP2012/058061
Filing Date :03/05/2012
(87) International Publication No :WO 2012/152633
(61) Patent of Addition to Application Number :NA
Filing Date :NA
(62) Divisional to Application Number :NA
Filing Date :NA

(71)**Name of Applicant :**
1)TELEFONAKTIEBOLAGET L M ERICSSON (PUBL)
Address of Applicant :S 164 83 Stockholm Sweden
(72)**Name of Inventor :**
1)DIMOU Konstantinos
2)LINDOFF Bengt
3)KAMUF Matthias

(57) Abstract :
A user equipment (UE) located in an extended range area of a neighbor base station cell in a communication network such as a low power cell in a heterogeneous network can inform its serving base station such as a macro cell overlying the low power cell of the UE s capability of canceling interference from other cells transmissions. That capability information enables the serving cell to decide based on more information whether range extension of the neighbor cell is beneficial for a number of UEs and can result in more efficient radio resource utilization.

No. of Pages : 35 No. of Claims : 23

(12) PATENT APPLICATION PUBLICATION
(19) INDIA
(22) Date of filing of Application :31/10/2013
(21) Application No.9399/DELNP/2013 A
(43) Publication Date : 19/12/2014

(54) Title of the invention : NON HIERARCHICAL INFRASTRUCTURE FOR MANAGING TWIN SECURITY KEYS OF PHYSICAL PERSONS OR OF ELEMENTS (IGCP/PKI).

(51) International classification :H04L9/08,H04L9/32
(31) Priority Document No :PCT/FR2011/000178
(32) Priority Date :25/03/2011
(33) Name of priority country :France
(86) International Application No :PCT/FR2011/000532
Filing Date :29/09/2011
(87) International Publication No :WO 2012/131175
(61) Patent of Addition to Application Number :NA
Filing Date :NA
(62) Divisional to Application Number :NA
Filing Date :NA

(71)**Name of Applicant :**
1)NTX RESEARCH SA
Address of Applicant :111 avenue Victor Hugo F 75116 Paris France
(72)**Name of Inventor :**
1)THONIEL Pascal
2)MELEMEDJIAN Francis

(57) Abstract :
The invention relates to a non-hierarchical infrastructure for managing twin-security keys of physical persons or of elements comprising a public key and a private key with a public key certificate, said structure not comprising any certification authority distinct from the physical persons or elements, said structure comprising at least one registering authority and its electronic notary server. There is provided at least one registering authority and its electronic notary server for a circle of trust. The registering authority comprises local registering agencies. The local registering agency establishes, after face-to-face verification of the identity of the physical person or of the identification of the element, a public key certificate, and a public key ownership certificate, which does not contain the piiblic key of the person or of the element but the print thereof, and which is transmitted in a secure manner to the associated electronic notary server which stores it in a secure manner. The public key ownership certificate is signed with the private key of the physical person or of the element, or else encrypted with the private key of the physical person or of the element according to an atypical use of this key in order to render it opaque with the exception of its serial number. The public key ownership certificate can be requested online on the electronic notary server to verify the authenticity of the corresponding public key certificate and the authenticity of its public key. Application to citizens, consumers and professionals and beyond this to other elements, living or otherwise, requiring secure digital exchanges.

No. of Pages : 62 No. of Claims : 19

(12) PATENT APPLICATION PUBLICATION
(19) INDIA
(22) Date of filing of Application :07/11/2013

(21) Application No.9586/DELNP/2013 A
(43) Publication Date : 19/12/2014

(54) Title of the invention : PENDULAR ACCELEROMETER

(51) International classification	:G01P15/08,G01P15/093,B60R21/0132
(31) Priority Document No	:11290282.0
(32) Priority Date	:21/06/2011
(33) Name of priority country	:EPO
(86) International Application No	:PCT/EP2012/061743
Filing Date	:19/06/2012
(87) International Publication No	:WO 2012/175515
(61) Patent of Addition to Application Number	:NA
Filing Date	:NA
(62) Divisional to Application Number	:NA
Filing Date	:NA

(71)**Name of Applicant :**
1)Siemens S.A.S.
Address of Applicant :9 Boulevard Finot F 93200 St. Denis France
(72)**Name of Inventor :**
1)CONSOLI Luciano

(57) Abstract :
The present invention relates to a device (1) for measuring the acceleration of a moving body, said device (1) including: a pendulum (11) capable of oscillating about an instantaneous center of rotation (0); and a detection system capable of detecting an oscillation of said pendulum (11) that is likely to result from said acceleration, characterized in that the pendulum (11) has a geometric configuration enabling same to interact with said detection system, said geometric configuration being such that said detection system only indicates an oscillation of said pendulum that exceeds a threshold oscillation value.

No. of Pages : 45 No. of Claims : 15

(12) PATENT APPLICATION PUBLICATION
(19) INDIA
(22) Date of filing of Application :07/11/2013
(21) Application No.9588/DELNP/2013 A
(43) Publication Date : 19/12/2014

(54) Title of the invention : METHODS AND APPARATUS FOR HOT AISLE/COLD AISLE DATA CENTER FIRE SUPPRESSION

(51) International classification :H05K7/20,G06F1/20
(31) Priority Document No :61/511816
(32) Priority Date :26/07/2011
(33) Name of priority country :U.S.A.
(86) International Application No :PCT/US2012/048387
Filing Date :26/07/2012
(87) International Publication No :WO 2013/016568
(61) Patent of Addition to Application Number :NA
Filing Date :NA
(62) Divisional to Application Number :NA
Filing Date :NA

(71)**Name of Applicant :**
1)FIRETRACE USA LLC
Address of Applicant :8435 N. 90th Street Suite 2 Scottsdale AZ 85258 U.S.A.
(72)**Name of Inventor :**
1)ECKHOLM William A.
2)HOFFMAN William David

(57) Abstract :
Methods and apparatus for hot aisle/cold aisle data center fife suppression according to various aspects of the present invention include a detection system that is configured to be located proximate to a side of a computer cabinet facing a hot aisle and a discharge system that is configured to be located within a subfloor having a cooling airflow that is directed upwards from the subfloor through one or more vents in the subfloor and into a cold aisle. The detection system may be configured to detect a fire condition such as smoke exiting the cabinet and in response generate a signal that activates the discharge system. The discharge system may be configured to inject a fire suppressant into the cooling airflow whereby the cooling airflow may facilitate delivery of the fire suppressant into the cold aisle and the computer cabinet.

No. of Pages : 30 No. of Claims : 20

(12) PATENT APPLICATION PUBLICATION
(19) INDIA
(22) Date of filing of Application :31/10/2013
(21) Application No.9401/DELNP/2013 A
(43) Publication Date : 19/12/2014

(54) Title of the invention : SYSTEMS AND METHODS FOR PHLEBOTOMY THROUGH A PERIPHERAL IV CATHETER

(51) International classification :A61B5/15
(31) Priority Document No :61/479223
(32) Priority Date :26/04/2011
(33) Name of priority country :U.S.A.
(86) International Application No :PCT/US2012/035122
Filing Date :26/04/2012
(87) International Publication No :WO 2012/149109
(61) Patent of Addition to Application Number :NA
Filing Date :NA
(62) Divisional to Application Number :NA
Filing Date :NA

(71)**Name of Applicant :**
1)DEVGON Pitamber
Address of Applicant :1500 Locust Street Suite 4311 Philadelphia Pennsylvania 19102 U.S.A.
(72)**Name of Inventor :**
1)DEVGON Pitamber

(57) Abstract :
An apparatus for performing phlebotomy through a peripheral intravenous line is described herein. The apparatus includes an introducer and a cannula and is configured to advance the cannula through a peripheral intravenous line. A y-adapter with a port of larger diameter is configured to receive the cannula to place the cannula in fluid communication with the peripheral intravenous line. When advanced, the cannula is configured to transport a bodily fluid to a volume outside of the body.

No. of Pages : 67 No. of Claims : 21

(12) PATENT APPLICATION PUBLICATION
(19) INDIA
(22) Date of filing of Application :31/10/2013
(21) Application No.9402/DELNP/2013 A
(43) Publication Date : 19/12/2014

(54) Title of the invention : E-TREE USING TWO PSEUDOWIRES BETWEEN EDGE ROUTERS WITH ENHANCED FORWARDING METHODS AND SYSTEMS

(51) International classification :H04L12/56
(31) Priority Document No :61/502501
(32) Priority Date :29/06/2011
(33) Name of priority country :U.S.A.
(86) International Application No :PCT/IB2012/053067
Filing Date :18/06/2012
(87) International Publication No :WO 2013/001405
(61) Patent of Addition to Application Number :NA
Filing Date :NA
(62) Divisional to Application Number :NA
Filing Date :NA

(71)**Name of Applicant :**
1)TELEFONAKTIEBOLAGET L M ERICSSON (PUBL)
Address of Applicant :S 164 83 Stockholm Sweden
(72)**Name of Inventor :**
1)KINI Sriganesh
2)SINICROPE David
3)CHEN Michael
4)RAPOPORT Marc

(57) Abstract :
An e tree service that includes establishing two pseudowires (PW) between edge network elements with enhanced packet forwarding is described. In one embodiment a root PW is used for carrying packets that are sent from a root node network element and a leaf PW is used for carrying packets that are sent from a leaf node network element in the e tree service network. When a network element receives a packet with a destination Media Access Control (MAC) address on the logical port associated with the leaf access circuit (AC) responsive to determining that the destination MAC address corresponds to a MAC address in a MAC address table stored in the network element and that an attribute associated with that MAC address in the MAC address table indicates the MAC address was learned from the leaf PW the network element drops the packet.

No. of Pages : 45 No. of Claims : 20

(12) PATENT APPLICATION PUBLICATION
(19) INDIA
(22) Date of filing of Application :31/10/2013
(21) Application No.9403/DELNP/2013 A
(43) Publication Date : 19/12/2014

(54) Title of the invention : NOVEL AMINO PYRROLINE DERIVATIVES AND USE THEREOF IN THE PREVENTION AND/OR TREATMENT OF METABOLIC SYNDROME

(51) International classification :C07D207/22,C07D403/04,A61K31/40
(31) Priority Document No :1153375
(32) Priority Date :19/04/2011
(33) Name of priority country :France
(86) International Application No :PCT/FR2012/050835
Filing Date :17/04/2012
(87) International Publication No :WO 2012/143660
(61) Patent of Addition to Application Number :NA
Filing Date :NA
(62) Divisional to Application Number :NA
Filing Date :NA

(71)**Name of Applicant :**
1)UNIVERSITE DE STRASBOURG
Address of Applicant :4 rue Blaise Pascal F 67000 Strasbourg France
(72)**Name of Inventor :**
1)BOUSQUET Pascal
2)EHRHARDT Jean Daniel
3)FELLMANN Lyne
4)GASPARIK Vincent
5)GRENEY Hugues
6)HADJERI Mohamed
7)MANN Andr
8)NIEDERHOFFER Nathalie
9)SCHANN Stephan

(57) Abstract :
The invention relates to novel amino pyrroline derivatives the pharmacologically acceptable salts thereof and the use of same in the prevention and/or treatment of metabolic syndrome.

No. of Pages : 70 No. of Claims : 14

(12) PATENT APPLICATION PUBLICATION
(19) INDIA
(22) Date of filing of Application :31/10/2013
(21) Application No.9405/DELNP/2013 A
(43) Publication Date : 19/12/2014

(54) Title of the invention : LEAD EXTRACTION METHODS AND APPARATUS

(51) International classification :A61N1/05,A61B17/3205
(31) Priority Document No :61/470731
(32) Priority Date :01/04/2011
(33) Name of priority country :U.S.A.
(86) International Application No :PCT/IB2012/000818
Filing Date :30/03/2012
(87) International Publication No :WO 2012/131492
(61) Patent of Addition to Application Number :NA
Filing Date :NA
(62) Divisional to Application Number :NA
Filing Date :NA

(71)**Name of Applicant :**
1)LEADEX CARDIAC LTD.
Address of Applicant :18 Galgalei Haplada St. P.O. Box 400 46103 Herzliya Israel
(72)**Name of Inventor :**
1)OLOMUTZKI Yoav
2)SHAFRIR Roey

(57) Abstract :
An apparatus configured to control a lead extraction tool for assisting in removal of an implanted lead. The apparatus comprises at least one valve configured to control fluid flow to the lead extraction tool. When the at least one valve is open the at least one valve is configured to allow fluid stored in the apparatus to flow thereby applying when the apparatus is fluidly coupled to the lead extraction tool fluid pressure to at least one component of the lead extraction tool. The apparatus further comprises at least one controller configured to control opening and/or closing of the at least one valve.

No. of Pages : 94 No. of Claims : 19

(12) PATENT APPLICATION PUBLICATION
(19) INDIA
(22) Date of filing of Application :18/11/2013
(21) Application No.9896/DELNP/2013 A
(43) Publication Date : 19/12/2014

(54) Title of the invention : DIRECT TRIFLUOROMETHYLATIONS USING TRIFLUOROMETHANE

(51) International classification :C09K3/00
(31) Priority Document No :61/480092
(32) Priority Date :28/04/2011
(33) Name of priority country :U.S.A.
(86) International Application No :PCT/US2012/034228
Filing Date :19/04/2012
(87) International Publication No :WO 2012/148772
(61) Patent of Addition to Application Number :NA
Filing Date :NA
(62) Divisional to Application Number :NA
Filing Date :NA

(71)**Name of Applicant :**
1)UNIVERSITY OF SOUTHERN CALIFORNIA
Address of Applicant :3740 McClintock Ave. Hughes EEB Suite 131 Los Angeles California 90089 U.S.A.
(72)**Name of Inventor :**
1)PRAKASH G.K. Surya
2)JOG Parag V.
3)BATAMACK Patrice T.D.
4)OLAH George A.

(57) Abstract :
A direct trifluoromethylation method preferably using a trifluoromethane as a fluoromethylating species. In particular the present method is used for preparing a trifluoromethylated substrate by reacting a fluoromethylatable substrate with a trifluoromethylating agent in the presence of an alkoxide or metal salt of silazane under conditions sufficient to trifluoromethylate the substrate; wherein the fluoromethylatable substrate includes chlorosilanes carbonyl compounds such as esters aryl halides aldehydes ketones chalcones alkyl formates alkyl halides aryl halides alkyl borates carbon dioxide or sulfur.

No. of Pages : 41 No. of Claims : 21

(12) PATENT APPLICATION PUBLICATION
(19) INDIA
(22) Date of filing of Application :14/11/2013
(21) Application No.9800/DELNP/2013 A
(43) Publication Date : 19/12/2014

(54) Title of the invention : CENTRIFUGAL COMPRESSOR IMPELLER

(51) International classification :F04D29/28,F04D29/30,F04D29/44
(31) Priority Document No :1154461
(32) Priority Date :23/05/2011
(33) Name of priority country :France
(86) International Application No :PCT/FR2012/051074
Filing Date :14/05/2012
(87) International Publication No :WO 2012/160290
(61) Patent of Addition to Application Number :NA
Filing Date :NA
(62) Divisional to Application Number :NA
Filing Date :NA

(71)**Name of Applicant :**
1)TURBOMECA
Address of Applicant :F 64510 Bordes France
(72)**Name of Inventor :**
1)HERRAN Mathieu
2)TARNOWSKI Laurent Pierre

(57) Abstract :
The invention relates to the field of centrifugal compressors, and more particularly to an impeller 201 of a centrifugal compressor 3, the impeller having a web 202 and blades 205 secured to the web 202 on a front face 203 of the web 202. A point of intersection between the 10 trailing edge 207 and the blade root 215 is at least one half-thickness of the web 202 further forward than the blade root 215 at an intermediate diameter Di of the impeller 201, and a point of intersection between the trailing edge 207 and the blade tip 216 is also further 15 forward than the blade tip 216 at an intermediate diameter D± of the impeller 201.

No. of Pages : 16 No. of Claims : 9

(12) PATENT APPLICATION PUBLICATION
(19) INDIA
(22) Date of filing of Application :14/11/2013
(21) Application No.9801/DELNP/2013 A
(43) Publication Date : 19/12/2014

(54) Title of the invention : METHOD AND SYSTEM FOR A VEHICLE

(51) International classification :B60W30/18,B60W50/00,B60W10/06
(31) Priority Document No :11505278
(32) Priority Date :10/06/2011
(33) Name of priority country :Sweden
(86) International Application No :PCT/SE2012/050605
Filing Date :07/06/2012
(87) International Publication No :WO 2012/169960
(61) Patent of Addition to Application Number :NA
Filing Date :NA
(62) Divisional to Application Number :NA
Filing Date :NA

(71)**Name of Applicant :**
1)SCANIA CV AB
Address of Applicant :S 151 87 Sdertlje Sweden
(72)**Name of Inventor :**
1)ABDUL RASOOL Mustafa
2)JOHANSSON Oskar
3)–GREN Mikael

(57) Abstract :
The present invention relates to a method for running of a vehicle such that said vehicle comprises a combustion engine which can selectively be connected to at least one driveshaft (104 105) to deliver driving force to said driveshaft (104 105) for propulsion of said vehicle said vehicle can be run in a first mode (Ml) in which it is run with said engine connected to said driveshaft (104 105) and in which fuel supply to said engine is substantially shut off in a second mode (M2) in which it is run with said engine disconnected from said at least one driveshaft (104 105). In a situation where the vehicle is or will be travelling on a downgrade the method comprises determining whether running said vehicle on said downgrade in said first mode (Ml) will result in a speed increase for said vehicle and running the vehicle in said second mode (M2) if it is determined that running it in said first mode (Ml) would result in a speed increase for said vehicle (100).

No. of Pages : 41 No. of Claims : 23

(12) PATENT APPLICATION PUBLICATION
(19) INDIA
(22) Date of filing of Application :14/11/2013
(21) Application No.9802/DELNP/2013 A
(43) Publication Date : 19/12/2014

(54) Title of the invention : METHOD AND SYSTEM FOR A VEHICLE

(51) International classification	:B60W30/18,B60W10/08,B60W10/02
(31) Priority Document No	:11505310
(32) Priority Date	:10/06/2011
(33) Name of priority country	:Sweden
(86) International Application No	:PCT/SE2012/050607
Filing Date	:07/06/2012
(87) International Publication No	:WO 2012/169961
(61) Patent of Addition to Application Number	:NA
Filing Date	:NA
(62) Divisional to Application Number	:NA
Filing Date	:NA

(71)**Name of Applicant :**
1)SCANIA CV AB
Address of Applicant :S 151 87 Sdertlje Sweden
(72)**Name of Inventor :**
1)ABDUL RASOOL Mustafa
2)JOHANSSON Oskar
3)–GREN Mikael

(57) Abstract :
The present invention relates to a method for running a vehicle (100) such that said vehicle (100) comprises a combustion engine (101) which can selectively be connected to at least one driveshaft (104 105) to deliver driving force to said driveshaft (104 105) for propulsion of said vehicle (100). When said vehicle (100) is in motion the method comprises : when said vehicle (100) is approaching a downgrade determining whether said engine (101) can be disconnected from said at least one driveshaft (104 105) for at least a first period of time (T1) and when said engine (101) can be disconnected from said at least one driveshaft (104 105) for at least said first period of time (T1) disconnecting said engine (101) from said at least one driveshaft (104 105) for said first period (T1) said engine (101) also being switched off for said first period (T1). The invention relates also to a system and a vehicle.

No. of Pages : 33 No. of Claims : 18

(12) PATENT APPLICATION PUBLICATION
(19) INDIA
(22) Date of filing of Application :13/11/2013
(21) Application No.9768/DELNP/2013 A
(43) Publication Date : 19/12/2014

(54) Title of the invention : TELESCOPING IM NAIL AND ACTUATING MECHANISM

(51) International classification :A61B17/72,A61B17/86
(31) Priority Document No :13/109478
(32) Priority Date :17/05/2011
(33) Name of priority country :U.S.A.
(86) International Application No :PCT/US2012/038248
Filing Date :17/05/2012
(87) International Publication No :WO 2012/158865
(61) Patent of Addition to Application Number :NA
Filing Date :NA
(62) Divisional to Application Number :NA
Filing Date :NA

(71)**Name of Applicant :**
1)SMITH & NEPHEW INC.
Address of Applicant :1450 Brooks Road Memphis Tennessee 38116 U.S.A.
(72)**Name of Inventor :**
1)ZAHRLY Daniel C.
2)EVANS David L.
3)JANNA Sied W.

(57) Abstract :
A length adjustable IM nail system includes a telescoping IM nail with proximal and distal bodies. An inner magnet within the proximal body is connected to a threaded rod which in turn is connected to the distal body. The threaded rod passes through a threaded block which is connected to the proximal body. The position of the distal end of the threaded rod is fixed with respect to the distal body but may rotate freely within this fixed position. An actuator is also disclosed that includes a pair of rotating magnets disposed in an angular relationship with each other and the axis of the IM nail and the patient s limb. Rotation of these outer magnets in the same direction results in rotation of the inner magnet and threaded rod and a telescoping axial movement of the threaded block and proximal body with respect to the distal body.

No. of Pages : 39 No. of Claims : 8

(12) PATENT APPLICATION PUBLICATION
(19) INDIA
(22) Date of filing of Application :13/11/2013
(21) Application No.9769/DELNP/2013 A
(43) Publication Date : 19/12/2014

(54) Title of the invention : THEROMPLASTIC ELASTOMER COMPOUNDS EXHIBITING SHAPE MEMORY VIA THERMO MECHANICAL ACTION

(51) International classification :C08L101/00,C08L25/08,C08L67/04
(31) Priority Document No :61/491361
(32) Priority Date :31/05/2011
(33) Name of priority country :U.S.A.
(86) International Application No :PCT/US2012/039966
Filing Date :30/05/2012
(87) International Publication No :WO 2012/166782
(61) Patent of Addition to Application Number :NA
Filing Date :NA
(62) Divisional to Application Number :NA
Filing Date :NA

(71)**Name of Applicant :**
1)POLYONE CORPORATION
Address of Applicant :33587 Walker Road Avon Lake Ohio 44012 U.S.A.
(72)**Name of Inventor :**
1)XU Liang

(57) Abstract :
A thermoplastic elastomer compound is disclosed having a high strain recovery rate and a high strain fixity rate to provide shape memory preferably manageable shape memory. One type of thermoplastic elastomer compound is comprises a maleated styrenic block copolymer and polycaprolactone to achieve the shape memory. A second type of thermoplastic elastomer compound comprises styrene ethylene/butylene styrene and a paraffin wax having less than about 0.5% oil content. Shape modes of articles made from the thermoplastic elastomer compound can be altered by at least one thermo mechanical event to cause deformation of the compound from a first shape to a second shape with retention of the compound in the second shape for any reasonable time interval.

No. of Pages : 26 No. of Claims : 16

(12) PATENT APPLICATION PUBLICATION
(19) INDIA
(22) Date of filing of Application :01/11/2013
(21) Application No.9464/DELNP/2013 A
(43) Publication Date : 19/12/2014

(54) Title of the invention : RESIDUAL CURRENT CIRCUIT BREAKER

(51) International classification :H02H3/33
(31) Priority Document No :464/2011
(32) Priority Date :01/04/2011
(33) Name of priority country :Austria
(86) International Application No :PCT/EP2012/055414
Filing Date :27/03/2012
(87) International Publication No :WO 2012/130846
(61) Patent of Addition to Application Number :NA
Filing Date :NA
(62) Divisional to Application Number :NA
Filing Date :NA

(71)**Name of Applicant :**
1)Eaton Industries (Austria) GmbH
Address of Applicant :Eugenia 1 A 3931 Schrems Austria
(72)**Name of Inventor :**
1)MEISEL Rainer
2)RITZINGER Georg

(57) Abstract :
In the case of a residual-current circuit breaker(l) having a core balance current transformer (2) for detecting a residual current, wherein a secondary winding (4) is arranged on a core (3) of the core-balance current transformer (2) wherein the residual current circuit breaker (1) has an AC measurement arrangement (6), it is proposed that the AC measurement arrangement (5) and the DC measurement arrangement (6) are design to operate simultaneously and in parallel.

No. of Pages : 20 No. of Claims : 15

(12) PATENT APPLICATION PUBLICATION
(19) INDIA
(22) Date of filing of Application :01/11/2013
(21) Application No.9465/DELNP/2013 A
(43) Publication Date : 19/12/2014

(54) Title of the invention : ARRANGEMENT FOR ESTABLISHING AND BREAKING A CONNECTION BETWEEN A PLUG AND A MATING PLUG

(51) International classification :H01R13/629
(31) Priority Document No :11002730.7
(32) Priority Date :01/04/2011
(33) Name of priority country :EPO
(86) International Application No :PCT/EP2012/055348
Filing Date :26/03/2012
(87) International Publication No :WO 2012/130812
(61) Patent of Addition to Application Number :NA
Filing Date :NA
(62) Divisional to Application Number :NA
Filing Date :NA

(71)**Name of Applicant :**
1)EATON ELECTRICAL IP GMBH & CO. KG
Address of Applicant :Airport Center Schnefeld Mittelstrasse 5 5a 12529 Schnefeld Germany
2)Tyco Electronics AMP GmbH
(72)**Name of Inventor :**
1)KONIETZKO Thomas
2)STANKE Stephan
3)BAUJAN Guenter
4)WINZEN Lothar
5)FREYERMUTH Thomas
6)TRUEBA Luis Javier Puras
7)KRAEMER Rudolf
8)ABOULKASSEM Mohamed
9)BERGNER Bert
10)SCHRETTLINGER Christian

(57) Abstract :
Arrangement for establishing and/or and breaking a connection between a plug and a complementary mating plug, wherein a lever which can be pivoted about an axis is arranged on a plug. The connection between a plug and a mating plug can be broken when the lever is pivoted into a disconnection position and/or can be established when the lever is pivoted into a connection position. The plug is, in particular, a switch module, for example a tripping module for a mating plug which is in the form of circuit breaker.

No. of Pages : 9 No. of Claims : 9

(12) PATENT APPLICATION PUBLICATION
(19) INDIA
(22) Date of filing of Application :18/11/2013
(21) Application No.9855/DELNP/2013 A
(43) Publication Date : 19/12/2014

(54) Title of the invention : UNIVERSAL LOADING DEVICE

(51) International classification :F16B47/00
(31) Priority Document No :13/098403
(32) Priority Date :30/04/2011
(33) Name of priority country :U.S.A.
(86) International Application No :PCT/US2012/035458
Filing Date :27/04/2012
(87) International Publication No :WO 2012/151124
(61) Patent of Addition to Application Number :NA
Filing Date :NA
(62) Divisional to Application Number :NA
Filing Date :NA

(71)**Name of Applicant :**
1)BYLER Jonathan
Address of Applicant :San Jose CA 95032 U.S.A.
(72)**Name of Inventor :**
1)BYLER Jonathan

(57) Abstract :
Disclosed herein is an apparatus for assisting workers moving large and heavy containers designed for long distance travel especially container travel in an airplane. The subject invention is a universal loading device (ULD) including an angle bracket. The angle bracket having a first arm defining in use a handle. The angle bracket having a second arm which is generally perpendicular to the first arm. Attached to the second arm is an attachment member for attaching the ULD to a container. Typically the attachment member includes a suction cup or other simple mechanical suction device. In order to guide the ULD of this invention to its desired place on the container a support member is connected to the ULD. The support member has a portion for contacting the container which is generally smooth to prevent damaging the container. Additionally the support member has thickness approximately equal to the thickness of the deformed suction cup.

No. of Pages : 20 No. of Claims : 12

(12) PATENT APPLICATION PUBLICATION
(19) INDIA
(22) Date of filing of Application :04/11/2013
(21) Application No.9513/DELNP/2013 A
(43) Publication Date : 19/12/2014

(54) Title of the invention : CONTROL DEVICE FOR INTERNAL COMBUSTION ENGINE

(51) International classification :F02D45/00
(31) Priority Document No :NA
(32) Priority Date :NA
(33) Name of priority country :NA
(86) International Application No :PCT/JP2011/065805
Filing Date :11/07/2011
(87) International Publication No :WO 2013/008296
(61) Patent of Addition to Application Number :NA
Filing Date :NA
(62) Divisional to Application Number :NA
Filing Date :NA

(71)**Name of Applicant :**
1)TOYOTA JIDOSHA KABUSHIKI KAISHA
Address of Applicant :1 Toyota cho Toyota shi Aichi 4718571 Japan
(72)**Name of Inventor :**
1)YAGUCHI Hiroshi
2)MURAKAMI Motoichi
3)OZAKI Daisaku

(57) Abstract :
Provided is a control device for an internal combustion engine with which it is possible to effectively prevent an excessive increase in the piston temperature and prevent degradation of the various functions of the internal combustion engine associated with the implementation of faulty combustion suppression control even when faulty combustion occurs continuously or almost continuously over multiple cycles. This control device is equipped with an in cylinder pressure sensor (34) that obtains the in cylinder pressure P for an internal combustion engine (10). When continuous pre ignition is detected using the in cylinder pressure sensor (34) the control device makes it more difficult for continuous pre ignition suppression control to be executed when the Pmax at the time of pre ignition is low than when the Pmax at the time of pre ignition is high.

No. of Pages : 42 No. of Claims : 5

(12) PATENT APPLICATION PUBLICATION
(19) INDIA
(22) Date of filing of Application :04/11/2013
(21) Application No.9514/DELNP/2013 A
(43) Publication Date : 19/12/2014

(54) Title of the invention : POWER TRANSMISSION DEVICE FOR VEHICLE

(51) International classification :F16H57/02
(31) Priority Document No :NA
(32) Priority Date :NA
(33) Name of priority country :NA
(86) International Application No :PCT/JP2011/065828
Filing Date :11/07/2011
(87) International Publication No :WO 2013/008308
(61) Patent of Addition to Application Number :NA
Filing Date :NA
(62) Divisional to Application Number :NA
Filing Date :NA

(71)**Name of Applicant :**
1)TOYOTA JIDOSHA KABUSHIKI KAISHA
Address of Applicant :1 Toyota cho Toyota shi Aichi 4718571 Japan
(72)**Name of Inventor :**
1)TAMURA Naoki
2)SHIMIZU Takashi

(57) Abstract :
A power transmission system for a vehicle includes a bowl-shaped peripheral wall for housing a power transmission member and a structure is provided to inhibit a circular standing wave mode that is generated in the bowl-shaped peripheral wall during power transmission. A resonance frequency f is increased in a surface of a bowl-shaped peripheral wall 10 29 that is provided with a rib 72 while the resonance frequency f is reduced in a surface of the bowl-shaped peripheral wall 29 that is provided with a mass 74. It is possible to inhibit excitation of the circular standing wave mode generated in the bowl-shaped peripheral wall 29 by changing the resonance frequency f between a peripheral wall surface of the housing I la that is provided with the rib 72 and a peripheral wall surface 15 thereof that is provided with the mass 74.

No. of Pages : 23 No. of Claims : 4

(12) PATENT APPLICATION PUBLICATION
(19) INDIA
(22) Date of filing of Application :05/11/2013
(21) Application No.9515/DELNP/2013 A
(43) Publication Date : 19/12/2014

(54) Title of the invention : POLYESTER QUATERNARY SALT AND COMPOSITIONS THEREOF

(51) International classification :B01F17/00,C08G63/685,C08G63/91
(31) Priority Document No :61/483280
(32) Priority Date :06/05/2011
(33) Name of priority country :U.S.A.
(86) International Application No :PCT/US2012/036415
Filing Date :04/05/2012
(87) International Publication No :WO 2012/154515
(61) Patent of Addition to Application Number :NA
Filing Date :NA
(62) Divisional to Application Number :NA
Filing Date :NA

(71)**Name of Applicant :**
1)LUBRIZOL ADVANCED MATERIALS INC.
Address of Applicant :9911 Brecksville Road Cleveland OH 44141 3247 U.S.A.
(72)**Name of Inventor :**
1)THETFORD Dean
2)MORETON David J.
3)GREENFIELD Hannah
4)JONES Joanne L.

(57) Abstract :
The invention relates to a composition containing a particulate solid; an organic medium; and a quaternised polyester salt which comprises a product obtained/obtainable by reaction of (i) a polyester containing a tertiary amino group; and (ii) a quaternising agent suitable for converting the tertiary amino group to a quaternary nitrogen wherein the quaternising agent is a hydrocarbyl epoxide in combination with an acid or mixtures thereof. The invention further relates to the use of the product as a dispersant. The invention further relates to the use of the dispersant in media such as inks mill bases plastics and paints.

No. of Pages : 29 No. of Claims : 14

(12) PATENT APPLICATION PUBLICATION
(19) INDIA
(22) Date of filing of Application :05/11/2013
(21) Application No.9516/DELNP/2013 A
(43) Publication Date : 19/12/2014

(54) Title of the invention : TERMINATION FOR ELECTRICAL CABLES AND METHOD FOR MANUFACTURING SUCH A TERMINATION

(51) International classification :H02G15/06,H02G15/064
(31) Priority Document No :NA
(32) Priority Date :NA
(33) Name of priority country :NA
(86) International Application No :PCT/EP2011/002504
Filing Date :19/05/2011
(87) International Publication No :WO 2012/155934
(61) Patent of Addition to Application Number :NA
Filing Date :NA
(62) Divisional to Application Number :NA
Filing Date :NA

(71)**Name of Applicant :**
1)PRYSMIAN S.p.A.
Address of Applicant :Viale Sarca 222 I 20126 Milano Italy
(72)**Name of Inventor :**
1)QUAGGIA Dario

(57) Abstract :
Termination for electrical cables is disclosed comprising an outer insulation tubular body; a conductive rod coaxially arranged within said insulation tubular body; an elastomeric sleeve coaxially arranged within said insulation tubular body and extending about an end portion of said conductive rod; a connecting device coaxially arranged within said elastomeric sleeve mechanically and electrically connected to said conductive rod and being adapted to be mechanically and electrically connected to an electrical cable; a conductive tubular element coaxially arranged within said insulation tubular body and adapted to be electrically connected to the ground; a semi conductive element coaxially arranged within said conductive tubular element and partially extending inside said elastomeric sleeve on the opposite side to said conductive rod; at least one elastic conductive element radially interposed between and in a contact with said conductive tubular element and said semi conductive element. Also disclosed is a method for manufacturing a termination for electrical cables and a method for connecting an electrical cable to a termination for electrical cables.

No. of Pages : 33 No. of Claims : 12

(12) PATENT APPLICATION PUBLICATION
(19) INDIA
(22) Date of filing of Application :07/11/2013
(21) Application No.9596/DELNP/2013 A
(43) Publication Date : 19/12/2014

(54) Title of the invention : LYOPHILIZED PREPARATION OF CYTOTOXIC DIPEPTIDES

(51) International classification :A61K38/05,A61K47/12,A61K47/26
(31) Priority Document No :11503711
(32) Priority Date :28/04/2011
(33) Name of priority country :Sweden
(86) International Application No :PCT/EP2012/057577
Filing Date :25/04/2012
(87) International Publication No :WO 2012/146625
(61) Patent of Addition to Application Number :NA
Filing Date :NA
(62) Divisional to Application Number :NA
Filing Date :NA

(71)**Name of Applicant :**
1)ONCOPEPTIDES AB
Address of Applicant :Fogdevreten 2A S 171 65 Solna Sweden
(72)**Name of Inventor :**
1)SPIRA Jack
2)LEHMANN Fredrik

(57) Abstract :
The present invention is directed to novel lyophilized pharmaceutical preparations comprising a cytotoxic dipeptides such as melphalan flufenamide and one or more excipient(s) selected from the group comprising a polysorbate; a polyethylene glycol; cyclodextrin; ocyclodextrin; hydroxypropyl cyclodextrin; sulfobutylether cyclodextrin; lactose; benzyl alcohol; disodium succinate; propylene glycol; Cremophor EL; Dimethyl sulfoxide; D mannitol; Trehalose; Sucrose and an amino acid. This preparation may be further formulated and is useful in cancer therapy.

No. of Pages : 76 No. of Claims : 40

(12) PATENT APPLICATION PUBLICATION
(19) INDIA
(22) Date of filing of Application :07/11/2013
(21) Application No.9597/DELNP/2013 A
(43) Publication Date : 19/12/2014

(54) Title of the invention : ENCLOSED PROXIMITY SWITCH ASSEMBLY

(51) International classification :H01H19/18,F16K37/00,H01H36/00
(31) Priority Document No :61/480342
(32) Priority Date :28/04/2011
(33) Name of priority country:U.S.A.
(86) International Application No :PCT/US2012/034919
Filing Date :25/04/2012
(87) International Publication No :WO 2012/148970
(61) Patent of Addition to Application Number :NA
Filing Date :NA
(62) Divisional to Application Number :NA
Filing Date :NA

(71)**Name of Applicant :**
1)GENERAL EQUIPMENT AND MANUFACTURING COMPANY INC. D/B/A TOPWORX INC.
Address of Applicant :3300 Fern Valley Road Louisville KY 40213 U.S.A.
(72)**Name of Inventor :**
1)MERRIFIELD Gregory Curtis
2)LAFOUNTAIN Robert Lynn
3)PATE Brian Phillip
4)SIMMONS Michael John

(57) Abstract :
An enclosed proximity switch assembly includes a top enclosure and a bottom enclosure that are coupled to form an interior volume. A shaft protrusion upwardly extends from a top surface of the top enclosure and an interior bore portion having an enclosed volume is defined within the shaft protrusion to form a portion of the interior volume. A first end of a vertical shaft is rotatably disposed within the interior bore portion such that the shaft rotates relative to the top and bottom enclosures. A samarium cobalt target magnet is coupled to the shaft and the target magnet interacts with a samarium cobalt driver magnet within a proximity switch when the target magnet is rotated within a predetermined distance of a top portion of the proximity switch. The interaction causes a switch to move from a first state to a second state or vice versa.

No. of Pages : 29 No. of Claims : 14

(12) PATENT APPLICATION PUBLICATION
(19) INDIA
(22) Date of filing of Application :07/11/2013
(21) Application No.9598/DELNP/2013 A
(43) Publication Date : 19/12/2014

(54) Title of the invention : IN LINE BACK PRESSURE FLUID REGULATOR

(51) International classification :G05D16/10,E21B21/10,F16K17/04
(31) Priority Document No :13/090770
(32) Priority Date :20/04/2011
(33) Name of priority country :U.S.A.
(86) International Application No :PCT/US2012/030793
Filing Date :28/03/2012
(87) International Publication No :WO 2012/145128
(61) Patent of Addition to Application Number :NA
Filing Date :NA
(62) Divisional to Application Number :NA
Filing Date :NA

(71)**Name of Applicant :**
1)TESCOM CORPORATION
Address of Applicant :12616 Industrial Blvd. Elk River MN 55330 U.S.A.
(72)**Name of Inventor :**
1)OLBRISCH Moritz Klaus
2)NIEBEL Ruediger
3)RAPSCH Falk

(57) Abstract :
In line back pressure fluid regulators are described. An example in line fluid regulator includes a regulator body defining a sensing chamber and an outlet of a fluid flow path of the fluid regulator. The outlet is in fluid communication with the sensing chamber via a first flow passageway in the regulator body. A bonnet is coupled to the regulator body and defines an inlet of the fluid flow path and a loading chamber disposed between the sensing chamber and the inlet. The loading chamber is substantially sealed relative to the fluid flow path of the fluid regulator. A pressure sensor is disposed between the inlet and the sensing chamber where the pressure sensor defines a second flow passageway to fluidly couple the inlet and the sensing chamber.

No. of Pages : 32 No. of Claims : 23

(12) PATENT APPLICATION PUBLICATION
(19) INDIA
(22) Date of filing of Application :07/11/2013
(21) Application No.9599/DELNP/2013 A
(43) Publication Date : 19/12/2014

(54) Title of the invention : SELF TAPPING SCREW

(51) International classification :F16B25/00
(31) Priority Document No :NA
(32) Priority Date :NA
(33) Name of priority country :NA
(86) International Application No :PCT/JP2011/060474
Filing Date :28/04/2011
(87) International Publication No :WO 2012/147207
(61) Patent of Addition to Application Number :NA
Filing Date :NA
(62) Divisional to Application Number :NA
Filing Date :NA

(71)**Name of Applicant :**
1)NITTO SEIKO CO. LTD.
Address of Applicant :20 Umegahata Inokura cho Ayabe shi Kyoto 6230054 Japan
(72)**Name of Inventor :**
1)TORII Shingo
2)YOKOTA Masanori
3)ABE Masanori

(57) Abstract :
To provide a self tapping screw ideal for fastening work made of a soft material such as a resin or aluminum alloy. [Solution] A self tapping screw (1): that is equipped with normal screw crests (10) and a female thread forming screw crest (12) having a larger diameter than the normal screw crests (10); and in which one of the pitches between said normal screw crests (10) that are located on the head ward side of the female thread forming screw crest (12) is set to be larger than the other pitches. The self tapping screw (1) provides a reduction in screwing torque together with an improvement of fastening strength and can be used for various kinds of workpieces from soft materials to hard materials.

No. of Pages : 20 No. of Claims : 2

(12) PATENT APPLICATION PUBLICATION
(19) INDIA
(22) Date of filing of Application :28/10/2013
(21) Application No.9265/DELNP/2013 A
(43) Publication Date : 19/12/2014

(54) Title of the invention : A BIOLOGICAL INDICATOR DEVICE FOR MONITORING THE EFFECTIVENESS OF A STERILIZATION PROCESS

(51) International classification :G01N 33/543
(31) Priority Document No :11/135,719
(32) Priority Date :24/05/2005
(33) Name of priority country :U.S.A.
(86) International Application No :PCT/US2006/018735
Filing Date :16/05/2006
(87) International Publication No :WO 2007/046865
(61) Patent of Addition to Application Number :NA
Filing Date :NA
(62) Divisional to Application Number :8006/DELNP/2007
Filed on :17/10/2007

(71)**Name of Applicant :**
1)AMERICAN STERILIZER COMPANY
Address of Applicant :5960 HEISLEY ROAD, MENTOR, OHIO 44060, UNITED STATES OF AMERICA.
(72)**Name of Inventor :**
1)TRICIA A CREGGER
2)PHILLIP P FRANCISKOVICH
3)MARK J DUDA
4)ROBERT E JR. BELLOW

(57) Abstract :
A biological indicator for monitoring the effectiveness of a sterilizing, disinfecting, etc., compound or condition is disclosed which comprises a substrate having a surface layer containing functional groups thereon desirably free of silicone linking groups. The functional groups are desirably in the form of a monolayer of a uniformed distribution and of a selected quantity. Various types of microorganisms such as spores and/or etiological agents are covalently bonded to the surface layer functional groups through a crosslinking reagent and thus form a uniform number and distribution of the microorganisms and/or etiological agents. After being subjected to sterilization or other similar treatment, etc., along with various articles such as instruments, the indicator can be cultivated to determine the effectiveness of the sterilization, disinfection, etc. process.

No. of Pages : 30 No. of Claims : 6

(12) PATENT APPLICATION PUBLICATION
(19) INDIA
(22) Date of filing of Application :28/10/2013
(21) Application No.9266/DELNP/2013 A
(43) Publication Date : 19/12/2014

(54) Title of the invention : A BIOLOGICAL INDICATOR DEVICE FOR MONITORING THE EFFECTIVENESS OF A STERILIZATION PROCESS

(51) International classification :G01N 33/543
(31) Priority Document No :11/135,719
(32) Priority Date :24/05/2005
(33) Name of priority country :U.S.A.
(86) International Application No :PCT/US2006/018735
Filing Date :16/05/2006
(87) International Publication No :WO 2007/046865
(61) Patent of Addition to Application Number :NA
Filing Date :NA
(62) Divisional to Application Number :8006/DELNP/2007
Filed on :17/10/2007

(71)**Name of Applicant :**
1)AMERICAN STERILIZER COMPANY
Address of Applicant :5960 HEISLEY ROAD, MENTOR, OHIO 44060, UNITED STATES OF AMERICA
(72)**Name of Inventor :**
1)TRICIA A CREGGER
2)PHILLIP P FRANCISKOVICH
3)MARK J DUDA
4)ROBERT E JR. BELLOW

(57) Abstract :
A biological indicator for monitoring the effectiveness of a sterilizing, disinfecting, etc., compound or condition is disclosed which comprises a substrate having a surface layer containing functional groups thereon desirably free of silicone linking groups. The functional groups are desirably in the form of a monolayer of a uniformed distribution and of a selected quantity. Various types of microorganisms such as spores and/or etiological agents are covalently bonded to the surface layer functional groups through a crosslinking reagent and thus form a uniform number and distribution of the microorganisms and/or etiological agents. After being subjected to sterilization or other similar treatment, etc., along with various articles such as instruments, the indicator can be cultivated to determine the effectiveness of the sterilization, disinfection, etc. process.

No. of Pages : 30 No. of Claims : 6

(12) PATENT APPLICATION PUBLICATION
(19) INDIA
(22) Date of filing of Application :28/10/2013
(21) Application No.9267/DELNP/2013 A
(43) Publication Date : 19/12/2014

(54) Title of the invention : A BIOLOGICAL INDICATOR DEVICE FOR MONITORING THE EFFECTIVENESS OF A STERILIZATION PROCESS

(51) International classification :G01N 33/543
(31) Priority Document No :11/135,719
(32) Priority Date :24/05/2005
(33) Name of priority country :U.S.A.
(86) International Application No :PCT/US2006/018735
Filing Date :16/05/2006
(87) International Publication No :WO 2007/046865
(61) Patent of Addition to Application Number :NA
Filing Date :NA
(62) Divisional to Application Number :8006/DELNP/2007
Filed on :17/10/2007

(71)**Name of Applicant :**
1)AMERICAN STERILIZER COMPANY
Address of Applicant :5960 HEISLEY ROAD, MENTOR, OHIO 44060, UNITED STATES OF AMERICA
(72)**Name of Inventor :**
1)TRICIA A CREGGER
2)PHILLIP P FRANCISKOVICH
3)MARK J DUDA
4)ROBERT E JR. BELLOW

(57) Abstract :
A biological indicator for monitoring the effectiveness of a sterilizing, disinfecting, etc., compound or condition is disclosed which comprises a substrate having a surface layer containing functional groups thereon desirably free of silicone linking groups. The functional groups are desirably in the form of a monolayer of a uniformed distribution and of a selected quantity. Various types of microorganisms such as spores and/or etiological agents are covalently bonded to the surface layer functional groups through a crosslinking reagent and thus form a uniform number and distribution of the microorganisms and/or etiological agents. After being subjected to sterilization or other similar treatment, etc., along with various articles such as instruments, the indicator can be cultivated to determine the effectiveness of the sterilization, disinfection, etc. process.

No. of Pages : 30 No. of Claims : 6

(12) PATENT APPLICATION PUBLICATION
(19) INDIA
(22) Date of filing of Application :28/10/2013
(21) Application No.9268/DELNP/2013 A
(43) Publication Date : 19/12/2014

(54) Title of the invention : ELECTROMAGNETIC INDUCTION WELDING OF PLASTIC PIPE DISTRIBUTION SYSTEMS

(51) International classification :B29C65/36,H05B6/10,H05B6/44
(31) Priority Document No :212205
(32) Priority Date :07/04/2011
(33) Name of priority country :Israel
(86) International Application No :PCT/IL2012/000150
Filing Date :05/04/2012
(87) International Publication No :WO 2012/137197
(61) Patent of Addition to Application Number :NA
Filing Date :NA
(62) Divisional to Application Number :NA
Filing Date :NA

(71)**Name of Applicant :**
1)HULIOT A.C.S. LTD
Address of Applicant :Kibbutz Sdeh Nehemia 12145 Upper Galilee Israel
(72)**Name of Inventor :**
1)HOOBERMAN Gideon

(57) Abstract :
Electromagnetic induction welding of plastic pipe distribution sys tems including inter alia induction weldable pipe connectors (100) each having at least one induction weldable pipe socket (102). The induction weldable pipe sockets (102) include a solid metal susceptor sleeve (104) enveloping a plastic solder lining (103). Electromagnet ic induction coil assemblies(200) for clamping on induction weldable pipe sockets (100).

No. of Pages : 31 No. of Claims : 19

(12) PATENT APPLICATION PUBLICATION
(19) INDIA
(22) Date of filing of Application :17/09/2013
(21) Application No.8150/DELNP/2013 A
(43) Publication Date : 19/12/2014

(54) Title of the invention : PREPARATION OF 3 5 DIOXO HEXANOATE ESTER IN TWO STEPS

(51) International classification :C07D319/06,C07C67/32,C07C69/716
(31) Priority Document No :11002723.2
(32) Priority Date :01/04/2011
(33) Name of priority country :EPO
(86) International Application No :PCT/EP2012/055581
Filing Date :29/03/2012
(87) International Publication No :WO 2012/130919
(61) Patent of Addition to Application Number :NA
Filing Date :NA
(62) Divisional to Application Number :NA
Filing Date :NA

(71)**Name of Applicant :**
1)LONZA LTD
Address of Applicant :Lonzastrasse CH 3930 Visp Switzerland
(72)**Name of Inventor :**
1)NOTI Christian
2)HU Guixian
3)JACKSON Barry

(57) Abstract :
The invention discloses a method for the preparation of tert butyl 6 chloro 3 5 dioxohexanoate from Meldrum s acid derivative and its use for the preparation of tert butyl (4R 6S) (6 hydroxymethyl 2 2 dimethyl 1 3 dioxan 4 yl)acetate(BHA) Rosuvastatin and Atorvastatin.

No. of Pages : 33 No. of Claims : 20

(12) PATENT APPLICATION PUBLICATION
(19) INDIA
(22) Date of filing of Application :17/09/2013
(21) Application No.8152/DELNP/2013 A
(43) Publication Date : 19/12/2014

(54) Title of the invention : CANCER DIAGNOSIS AND TREATMENT

(51) International classification :C12Q1/68,A01K67/027,A61K38/17
(31) Priority Document No :61/445972
(32) Priority Date :23/02/2011
(33) Name of priority country :U.S.A.
(86) International Application No :PCT/CA2012/000161
Filing Date :23/02/2012
(87) International Publication No :WO 2012/113061
(61) Patent of Addition to Application Number :NA
Filing Date :NA
(62) Divisional to Application Number :NA
Filing Date :NA

(71)**Name of Applicant :**
1)MIAMI MICE RESEARCH CORP
Address of Applicant :MaRS Centre Heritage Bldg 101 College Street Suite 120E Toronto Ontario M5G 1L7 Canada
(72)**Name of Inventor :**
1)LOBE Corrinne

(57) Abstract :
A diagnostic assay for cancer such as lung cancer is disclosed. The assay can also be used to follow patients during treatment and for assessment of disease relapse after treatment. The assay utilizes biomarkers for tumor formation identified in a transgenic mouse model. The assay is used to identify a therapeutic indication for a patient based on the patient s biomarker expression. The biomarker and fragments thereof are also useful for treating cancer for example lung or colon cancer.

No. of Pages : 83 No. of Claims : 75

(12) PATENT APPLICATION PUBLICATION
(19) INDIA
(22) Date of filing of Application :17/09/2013
(21) Application No.8153/DELNP/2013 A
(43) Publication Date : 19/12/2014

(54) Title of the invention : METHOD FOR TREATING TECHNICAL TEXTILES

(51) International classification :B29B17/04,B29B17/02,B29L22/02
(31) Priority Document No :1152702
(32) Priority Date :31/03/2011
(33) Name of priority country :France
(86) International Application No :PCT/EP2012/055652
Filing Date :29/03/2012
(87) International Publication No :WO 2012/130949
(61) Patent of Addition to Application Number :NA
Filing Date :NA
(62) Divisional to Application Number :NA
Filing Date :NA

(71)**Name of Applicant :**
1)RHODIA OPERATIONS
Address of Applicant :40 rue de la Haie Coq F 93306 Aubervilliers France
(72)**Name of Inventor :**
1)BASIRE Charlotte

(57) Abstract :
The present invention relates to a method for treating technical textiles containing thermoplastic fibers and including a coating such as inflatable airbags in particular which uses the principle of centrifugal decantation in order to separate the debris of the fibers and the coating material. The invention also relates to a method for manufacturing a thermoplastic composition in particular for molding which is produced using the resulting debris of the fibers and optionally reinforcing fillers. The specific feature of the present invention relates to the preparation of the coating free fabric thus resulting in formulations having high mechanical performance levels.

No. of Pages : 17 No. of Claims : 11

(12) PATENT APPLICATION PUBLICATION
(19) INDIA
(22) Date of filing of Application :18/09/2013
(21) Application No.8155/DELNP/2013 A
(43) Publication Date : 19/12/2014

(54) Title of the invention : PLANAR CONNECTOR

(51) International classification :H01R13/46,C08K3/34,C08K7/00
(31) Priority Document No :2011081763
(32) Priority Date :01/04/2011
(33) Name of priority country :Japan
(86) International Application No :PCT/JP2012/058051
Filing Date :28/03/2012
(87) International Publication No :WO 2012/137637
(61) Patent of Addition to Application Number :NA
Filing Date :NA
(62) Divisional to Application Number :NA
Filing Date :NA

(71)**Name of Applicant :**
1)POLYPLASTICS CO. LTD.
Address of Applicant :18 1 Konan 2 chome Minato ku Tokyo 1088280 Japan
(72)**Name of Inventor :**
1)OHTAKE Mineo
2)YOKOTA Toshiaki
3)FUKATSU Hiroki

(57) Abstract :
The present invention provides a planar connector formed of a liquid crystalline polymer, excellent in crack resistance to prevent a lattice portion configured therein from cracking after molding. The planar connector is formed of a composite resin composition containing: (A) a wholly aromatic polyester which exhibits optical anisotropy in a molten state, including the following constitutional units: (I) derived from 4-hydroxybenzoic acid; (II) derived from 6-hydroxy-2-naphthoic acid; (III) derived from 1, 4-phenylenedicarboxylic acid; (IV) derived from 1, 3-phenylenedicarboxylic acid and; (V) derived from 4, 4-dihydroxybiphenyl, wherein the units are individually contained in given contents; (B) a plate-like inorganic filler, and; (C) a glass fiber, wherein the content of (B) is 15 to 25% by weight relative to the total composition, the content of (C) is 10 to 25% by weight relative to the total composition, and the total content of (B) and (C) is 30 to 40% by weight relative to the total composition, and wherein the planar connector has a lattice structure in an outer frame and has a pitch in the lattice portion of 1.5 mm or less.

No. of Pages : 38 No. of Claims : 2

(12) PATENT APPLICATION PUBLICATION
(19) INDIA
(22) Date of filing of Application :11/11/2013
(21) Application No.9702/DELNP/2013 A
(43) Publication Date : 19/12/2014

(54) Title of the invention : INJECTION DEVICE FOR INJECTING A FLUID

(51) International classification :F01N3/20
(31) Priority Document No :10 2011 102 170.5
(32) Priority Date :20/05/2011
(33) Name of priority country :Germany
(86) International Application No :PCT/EP2012/059256
Filing Date :18/05/2012
(87) International Publication No :WO 2012/159986
(61) Patent of Addition to Application Number :NA
Filing Date :NA
(62) Divisional to Application Number :NA
Filing Date :NA

(71)**Name of Applicant :**
1)EMITEC GESELLSCHAFT FR EMISSIONSTECHNOLOGIE MBH
Address of Applicant :Hauptstrae 128 53797 Lohmar Germany
(72)**Name of Inventor :**
1)HODGSON Jan
2)SCHEPERS Sven

(57) Abstract :
Injection device (1) for injecting a fluid into an exhaust gas treatment device (15) having an injector (2) which is positioned in an injector holder (3) wherein the injector (2) has a feed opening (4) and a component (5) of the injector holder (3) extends into the feed opening (4). An injection device (1) of this type is suitable in particular for feeding urea/water solution into the exhaust gas treatment device (15) of a motor vehicle. The component (5) is preferably rigid in the longitudinal direction (23) and can be compressed in the radial direction (24) by way of a deformable rubber shell in order to compensate for the volumetric expansion of the solution if it freezes.

No. of Pages : 23 No. of Claims : 9

(12) PATENT APPLICATION PUBLICATION
(19) INDIA
(22) Date of filing of Application :11/11/2013
(21) Application No.9703/DELNP/2013 A
(43) Publication Date : 19/12/2014

(54) Title of the invention : METAL AIR ACCUMULATOR WITH AIR ELECTRODE PROTECTION DEVICE

(51) International classification :H01M10/44,H01M10/48,H01M12/08
(31) Priority Document No :1154356
(32) Priority Date :19/05/2011
(33) Name of priority country :France
(86) International Application No :PCT/FR2012/051080
Filing Date :15/05/2012
(87) International Publication No :WO 2012/156639
(61) Patent of Addition to Application Number :NA
Filing Date :NA
(62) Divisional to Application Number :NA
Filing Date :NA

(71)**Name of Applicant :**
1)ELECTRICITE DE FRANCE
Address of Applicant :22 30 avenue de Wagram F 75008 Paris France
(72)**Name of Inventor :**
1)TOUSSAINT Gwena«lle
2)STEVENS Philippe
3)TOUSSAINT Bernard

(57) Abstract :
The present invention relates to a rechargeable accumulator comprising one or more metal-air cells, each cell comprising a first terminal (1) and a second terminal (2), a metallic negative electrode (3) for metal-air cell, connected to the first terminal (1), a first positive electrode (4) for releasing oxygen, a second positive electrode (5) which 10 is a porous air electrode containing at least one oxygen reducing catalyst, an electrolyte, control means (6) suitable for continuously comparing the voltage measured between the terminal (2) and the terminal (1) with a setpoint value and for dispatching a switching signal to the switching means (7) when the measured voltage becomes smaller than the setpoint value, switching means (7) suitable for receiving a 15 switching signal originating from the control means (6) and for connecting and disconnecting the air electrode (5) of the second terminal (2). The present invention also relates to a method using such an accumulator.

No. of Pages : 15 No. of Claims : 11

(12) PATENT APPLICATION PUBLICATION
(19) INDIA
(22) Date of filing of Application :11/11/2013
(21) Application No.9704/DELNP/2013 A
(43) Publication Date : 19/12/2014

(54) Title of the invention : SIGNATURE FOR THE DIAGNOSIS OF CANCER AGGRESSIVENESS AND GENETIC INSTABILITY

(51) International classification :C12Q1/68,G01N33/574
(31) Priority Document No :11305603.0
(32) Priority Date :18/05/2011
(33) Name of priority country :EPO
(86) International Application No :PCT/EP2012/059239
Filing Date :18/05/2012
(87) International Publication No :WO 2012/156501
(61) Patent of Addition to Application Number :NA
Filing Date :NA
(62) Divisional to Application Number :NA
Filing Date :NA

(71)**Name of Applicant :**
1)CENTRE NATIONAL DE LA RECHERCHE SCIENTIFIQUE (CNRS)
Address of Applicant :3 rue Michel Ange F 75016 Paris France
(72)**Name of Inventor :**
1)CAZAUX Christophe
2)HOFFMANN Jean Sebastien

(57) Abstract :
The present invention relates to a method for diagnosing aggressiveness and/or genetic instability of a cancer in a patient from a cancer sample of said patient comprising: a) measuring in vitro the expression level of the POLQ gene and the expression level of a control gene in said patient cancer sample; b) calculating for said POLQ gene an expression level ratio of the expression level of POLQ to the expression of the said control gene in said patient cancer sample; c) comparing the said POLQ expression level ratio to a corresponding threshold value and d) diagnosing cancer aggressiveness and genetic instability if the said POLQ expression level ratio is superior to a corresponding threshold values. Dedicated microarrays and kits are also described as well as a method of selecting a suitable treatment.

No. of Pages : 34 No. of Claims : 19

(12) PATENT APPLICATION PUBLICATION
(19) INDIA
(22) Date of filing of Application :11/11/2013
(21) Application No.9705/DELNP/2013 A
(43) Publication Date : 19/12/2014

(54) Title of the invention : METHOD FOR RATIONALISING PRODUCTION OF DISPENSERS

(51) International classification :A47K10/24,A47K5/06
(31) Priority Document No :NA
(32) Priority Date :NA
(33) Name of priority country :NA
(86) International Application No :PCT/SE2011/050536
Filing Date :29/04/2011
(87) International Publication No :WO 2012/148333
(61) Patent of Addition to Application Number :NA
Filing Date :NA
(62) Divisional to Application Number :NA
Filing Date :NA

(71)**Name of Applicant :**
1)SCA HYGIENE PRODUCTS AB
Address of Applicant :S 405 03 Gteborg Sweden
(72)**Name of Inventor :**
1)GUSTAVSSON Frida
2)GROTH Gustav

(57) Abstract :
A method for rationalising production of a first series of first identical dispensers (10) and a second series of second identical dispensers (30) the first identical dispensers being different to the second identical dispensers though having at least the following common attributes: each of the first identical dispensers (10) and the second identical dispensers (30) is constituted by a housing (11; 31) formed at least by a first and a second distinguishable component (18 20; 34 36) which abut each other the first and the second distinguishable components together forming a motif receiving surface (24; 39) the motif receiving surface having a first region (26; 40) having a first change in depth per unit width ratio of at least 0.25. The method includes the steps of: injection moulding the first and second distinguishable components (18 20; 34 36); providing a motif (62) on a transfer medium (50) and applying the motif (62) to at least the first region (26; 40) of the motif receiving surface (24; 39) to thereby transfer the motif from the transfer medium to the motif receiving surface with the motif (62) occupying a rectangular area of at least 30 cm on the motif receiving surface (24; 39).

No. of Pages : 23 No. of Claims : 14

(12) PATENT APPLICATION PUBLICATION
(19) INDIA
(22) Date of filing of Application :11/11/2013
(21) Application No.9676/DELNP/2013 A
(43) Publication Date : 19/12/2014

(54) Title of the invention : DEVICE FOR PRODUCING GRAIN ORIENTED MAGNETIC STEEL SHEET AND METHOD FOR PRODUCING GRAIN ORIENTED MAGNETIC STEEL SHEET

(51) International classification :B23K26/08,C21D8/12
(31) Priority Document No :NA
(32) Priority Date :NA
(33) Name of priority country :NA
(86) International Application No :PCT/JP2011/062822
Filing Date :03/06/2011
(87) International Publication No :WO 2012/164746
(61) Patent of Addition to Application Number :NA
Filing Date :NA
(62) Divisional to Application Number :NA
Filing Date :NA

(71)**Name of Applicant :**
1)NIPPON STEEL & SUMITOMO METAL CORPORATION
Address of Applicant :6 1 Marunouchi 2 chome Chiyoda ku Tokyo 1008071 Japan
(72)**Name of Inventor :**
1)SAKAI Tatsuhiko
2)HAMAMURA Hideyuki

(57) Abstract :
An,apparatus (lO) for manufacturing a grain-oriented electrical steel sheet in which a magnetic domain is controlled by irradiating a laser beam, includes: a plurality of laser beam irradiation devices (20) which are arranged in a transfer direction of a 1 1N0V201S steel sheet (31); and a transfer-direction movement mechanism (15) which moves the laser beam irradiation devices (20) in the transfer direction of the steel sheet (31).

No. of Pages : 34 No. of Claims : 4

(12) PATENT APPLICATION PUBLICATION
(19) INDIA
(22) Date of filing of Application :11/11/2013
(21) Application No.9677/DELNP/2013 A
(43) Publication Date : 19/12/2014

(54) Title of the invention : OPTICAL ARTICLE COMPRISING A PRECURSOR COATING FOR AN ANTIFOGGING COATING AND A TEMPORARY LAYER RENDERING SAME SUITABLE FOR EDGING

(51) International classification :G02B1/10,G02B27/00
(31) Priority Document No :1154128
(32) Priority Date :12/05/2011
(33) Name of priority country :France
(86) International Application No :PCT/FR2012/051044
Filing Date :11/05/2012
(87) International Publication No :WO 2012/153072
(61) Patent of Addition to Application Number :NA
Filing Date :NA
(62) Divisional to Application Number :NA
Filing Date :NA

(71)**Name of Applicant :**
1)ESSILOR INTERNATIONAL (COMPAGNIE GENERALE DOPTIQUE)
Address of Applicant :147 rue de Paris F 94220 Charenton Le Pont France
(72)**Name of Inventor :**
1)HENKY Francis
2)THEODEN Alexis

(57) Abstract :
The present invention concerns an optical article comprising a substrate, at least one of the main surfaces of which is coated with a first coating comprising, at its surface, silanol groups and, in direct contact with this coating, a second coating which is a precursor for an antifog coating, the second coating being formed by deposition, on the first coating, of at least one compound A having: - a polyoxyalkylene group, and - at least one group capable of establishing a covalent bond with a silanol group, characterized in that the second coating comprises an internal part, in which said compound A is grafted to the first coating, and an external part, which can be removed by washing and/or wiping, resulting from the deposition of the compound A, and in that the second coating is coated with at least one temporary layer comprising at least 50%, preferably at least 60% and better still at least 70% by weight of silica, with respect to the total weight of the temporary layer.

No. of Pages : 27 No. of Claims : 16

(12) PATENT APPLICATION PUBLICATION
(19) INDIA
(22) Date of filing of Application :11/11/2013
(21) Application No.9678/DELNP/2013 A
(43) Publication Date : 19/12/2014

(54) Title of the invention : ELASTIC NONWOVEN MATERIALS COMPRISING PROPYLENE BASED AND ETHYLENE BASED POLYMERS

(51) International classification :D04H1/00,D04H3/00,C08F2/06
(31) Priority Document No :61/499369
(32) Priority Date :21/06/2011
(33) Name of priority country :U.S.A.
(86) International Application No :PCT/US2012/040472
Filing Date :01/06/2012
(87) International Publication No :WO 2012/177376
(61) Patent of Addition to Application Number :NA
Filing Date :NA
(62) Divisional to Application Number :NA
Filing Date :NA

(71)**Name of Applicant :**
1)EXXONMOBIL CHEMICAL PATENTS INC.
Address of Applicant :A Corporation Of The State Of Deleware 5200 Bayway Drive Baytown TX 77520 2101 U.S.A.
(72)**Name of Inventor :**
1)MEHTA Aspy K.
2)HARRIS Charles R.
3)KEYS Gregory E.
4)ZHAO Bin
5)RICHESON Galen C.

(57) Abstract :
The present invention relates to elastic nonwoven materials comprising an elastic layer formed from a polymer blend comprising a propylene based polymer and a minor amount of an ethylene based polymer. The propylene based polymer may comprise from about 75 to about 95 wt% propylene and from about 5 to about 25 wt% ethylene and/or a C Ci2 a olefin and may have a triad tacticity greater than about 90% and a heat of fusion less than about 75 J/g. The ethylene based polymer may comprise from about 65 to about 100 wt% ethylene and from 0 to about 35 wt% of one or more C C a olefins.

No. of Pages : 50 No. of Claims : 26

(12) PATENT APPLICATION PUBLICATION
(19) INDIA
(22) Date of filing of Application :11/11/2013
(21) Application No.9679/DELNP/2013 A
(43) Publication Date : 19/12/2014

(54) Title of the invention : COMPOSITIONS METHODS & SYSTEMS FOR RESPIRATORY DELIVERY OF TWO OR MORE ACTIVE AGENTS

(51) International classification :A01N25/00,A61K9/72,A61L9/02
(31) Priority Document No :NA
(32) Priority Date :NA
(33) Name of priority country :NA
(86) International Application No :PCT/US2011/036868
Filing Date :17/05/2011
(87) International Publication No :WO 2012/158166
(61) Patent of Addition to Application Number :NA
Filing Date :NA
(62) Divisional to Application Number :NA
Filing Date :NA

(71)**Name of Applicant :**
1)PEARL THERAPEUTICS INC.
Address of Applicant :200 Saginaw Drive Redwood City California 94063 U.S.A.
(72)**Name of Inventor :**
1)VEHRING Reinhard
2)HARTMAN Michael Steven
3)LECHUGA BALLESTEROS David
4)SMITH Adrian Edward
5)JOSHI Vidya B.
6)DWIVEDI Sarvajna Kumar

(57) Abstract :
Compositions methods and systems are provided for pulmonary or nasal delivery of two or more active agents via a metered dose inhaler. In one embodiment the compositions include a suspension medium active agent particles and suspending particles in which the active agent particles and suspending particles form a co suspension within the suspension medium.

No. of Pages : 131 No. of Claims : 61

(12) PATENT APPLICATION PUBLICATION
(19) INDIA
(22) Date of filing of Application :11/11/2013
(21) Application No.9680/DELNP/2013 A
(43) Publication Date : 19/12/2014

(54) Title of the invention : FLUID INJECTION SYSTEM HAVING VARIOUS SYSTEMS FOR CONTROLLING AN INJECTION PROCEDURE

(51) International classification :A61M1/00
(31) Priority Document No :61/485238
(32) Priority Date :12/05/2011
(33) Name of priority country :U.S.A.
(86) International Application No :PCT/US2012/037491
Filing Date :11/05/2012
(87) International Publication No :WO 2012/155035
(61) Patent of Addition to Application Number :NA
Filing Date :NA
(62) Divisional to Application Number :NA
Filing Date :NA

(71)**Name of Applicant :**
1)MEDRAD INC.
Address of Applicant :One Medrad Drive Indianola PA 15051 U.S.A.
(72)**Name of Inventor :**
1)SHEARER John D. Jr
2)SCUTT Christopher M.
3)GRUMSKI Walter J.
4)SPOHN Michael A.
5)MCWILLIAMS Jarrell T.
6)LONG Arlie D.
7)MORTON Richard C.

(57) Abstract :
A fluid injection system that includes an injector head having a syringe for delivering a fluid to a patient; a mounting structure pivotally connected to the injector head and configured to support the injector head above a surface; and a control system operationally coupled to the injector head for controlling an injection procedure is disclosed. The fluid injection system is provided with various sensors to control various aspects of the fluid injection system such as the establishment of a reference plane the determination of a tilt angle of the injector head and the determination of a temperature of an actuation system of the injector head.

No. of Pages : 72 No. of Claims : 38

(12) PATENT APPLICATION PUBLICATION
(19) INDIA
(22) Date of filing of Application :28/10/2013
(21) Application No.9269/DELNP/2013 A
(43) Publication Date : 19/12/2014

(54) Title of the invention : METHOD AND APPARATUS FOR ENERGY EFFICIENT PROCESSING OF SECONDARY DEPOSITS

(51) International classification :C10G1/10,C10B53/07
(31) Priority Document No :A 632/2011
(32) Priority Date :05/05/2011
(33) Name of priority country :Austria
(86) International Application No :PCT/AT2012/000127
Filing Date :04/05/2012
(87) International Publication No :WO 2012/149590
(61) Patent of Addition to Application Number :NA
Filing Date :NA
(62) Divisional to Application Number :NA
Filing Date :NA

(71)**Name of Applicant :**
1)OMV REFINING & MARKETING GMBH
Address of Applicant :Trabrennstrasse 6 8 1020 Wien Austria
(72)**Name of Inventor :**
1)HOFER Wolfgang

(57) Abstract :
Method for the depolymerisation of plastics material (1), in particular pre- or post-consumer plastics wastes, by means of heat introduction, wherein the plastics material (1) is molten to form a plastics melt and degassed before being passed to a depolymerisation reactor (3), adding a fraction obtained from crude oil as a solvent (6) to the plastics melt, thereby lowering the viscosity of the plastics melt solution supplied to the depolymerisation reactor (3) relative to the viscosity of the plastics melt.

No. of Pages : 18 No. of Claims : 20

(12) PATENT APPLICATION PUBLICATION
(19) INDIA
(22) Date of filing of Application :23/09/2013
(21) Application No.8303/DELNP/2013 A
(43) Publication Date : 19/12/2014

(54) Title of the invention : SOLAR DESALINATION PLANT FOR SEA WATER BRINES OR WASTE WATER AND DESALINATION METHOD

(51) International classification :C02F1/14,A01G9/24
(31) Priority Document No :P201130414
(32) Priority Date :22/03/2011
(33) Name of priority country :Spain
(86) International Application No :PCT/ES2012/000070
Filing Date :22/03/2012
(87) International Publication No :WO 2012/127081
(61) Patent of Addition to Application Number :NA
Filing Date :NA
(62) Divisional to Application Number :NA
Filing Date :NA

(71)**Name of Applicant :**
1)UNIVERSITAT POLITECNICA DE CATALUNYA
Address of Applicant :Calle Jordi Girona 31 08034 Barcelona Spain
(72)**Name of Inventor :**
1)BOSCH I BOSCH Angel

(57) Abstract :
It comprises a tent or covering with a pyramid-shaped structure (1), with an inner darkcoloured sheet and an outer transparent sheet, installed on a supporting base (9) 10 anchored to the ground or on floats on the surface of the sea, wherein in the apex of the pyramid there are included vaporising means with micronebulisers for nebulising the water to be treated, means for capturing humid air through a continuous or sectioned condensation column (3) and for subsoil distillation and heat dissipation in the smaller, water-collecting tank (4) and recirculation of the air devoid of humidity into the enclosure 15 (1). In addition, it includes a computerised control system of the processes comprising controls of the air and nebulised water flow rates and of the working regime of the facility.

No. of Pages : 15 No. of Claims : 18

(12) PATENT APPLICATION PUBLICATION
(19) INDIA
(22) Date of filing of Application :23/09/2013
(21) Application No.8304/DELNP/2013 A
(43) Publication Date : 19/12/2014

(54) Title of the invention : PESSARY DEVICE

(51) International classification :A61F2/00
(31) Priority Document No :13/083982
(32) Priority Date :11/04/2011
(33) Name of priority country :U.S.A.
(86) International Application No :PCT/US2012/032954
Filing Date :11/04/2012
(87) International Publication No :WO 2012/142056
(61) Patent of Addition to Application Number :NA
Filing Date :NA
(62) Divisional to Application Number :NA
Filing Date :NA

(71)**Name of Applicant :**
1)THE PROCTER & GAMBLE COMPANY
Address of Applicant :One Procter & Gamble Plaza Cincinnati OH 45202 U.S.A.
(72)**Name of Inventor :**
1)KARAPASHA Nancy

(57) Abstract :
A non expandable pessary device the pessary device having a top a base a length a longitudinal axis a maximum diameter and a minimum diameter that is less than the maximum diameter. The pessary device has a pressure region adapted to extend between an anterior vaginal wall and a posterior vaginal wall of a user to provide pressure on the user s urethra through the vaginal wall. The pressure region includes the maximum diameter and the maximum diameter is less than 25 mm.

No. of Pages : 26 No. of Claims : 10

(12) PATENT APPLICATION PUBLICATION
(19) INDIA
(22) Date of filing of Application :23/09/2013
(21) Application No.8305/DELNP/2013 A
(43) Publication Date : 19/12/2014

(54) Title of the invention : SINGLE USE PESSARY DEVICES

(51) International classification :A61F5/48,A61F6/08,A61F6/12
(31) Priority Document No :13/084185
(32) Priority Date :11/04/2011
(33) Name of priority country :U.S.A.
(86) International Application No :PCT/US2012/031965
Filing Date :03/04/2012
(87) International Publication No :WO 2012/141940
(61) Patent of Addition to Application Number :NA
Filing Date :NA
(62) Divisional to Application Number :NA
Filing Date :NA

(71)**Name of Applicant :**
1)THE PROCTER & GAMBLE COMPANY
Address of Applicant :One Procter & Gamble Plaza Cincinnati Ohio 45202 U.S.A.
(72)**Name of Inventor :**
1)KARAPASHA Nancy
2)OSBORN Thomas Ward III

(57) Abstract :
A non expandable single use pessary device. The pessary device has a top a base a length an outer surface a longitudinal axis a maximum diameter and a minimum diameter that is less than the maximum diameter. The pessary device includes a pressure region adapted to extend between an anterior vaginal wall and a posterior vaginal wall of a user to provide pressure on the user s urethra through the vaginal wall. The pressure region includes the maximum diameter. In addition the outer surface includes a usage indicator that is visible to a user viewing the outer surface of the device after the device is removed from the user s vagina.

No. of Pages : 25 No. of Claims : 11

(12) PATENT APPLICATION PUBLICATION
(19) INDIA
(22) Date of filing of Application :23/09/2013
(21) Application No.8306/DELNP/2013 A
(43) Publication Date : 19/12/2014

(54) Title of the invention : RETAINING DEVICE WITH ELASTIC DEFORMATION FOR A FLEXIBLE SCREEN OF A VERTICALLY OPENING GOODS HANDLING DOOR

(51) International classification :E06B9/58
(31) Priority Document No :1100931
(32) Priority Date :30/03/2011
(33) Name of priority country :France
(86) International Application No :PCT/FR2012/050489
Filing Date :08/03/2012
(87) International Publication No :WO 2012/131207
(61) Patent of Addition to Application Number :NA
Filing Date :NA
(62) Divisional to Application Number :NA
Filing Date :NA

(71)**Name of Applicant :**
1)SOFINECO
Address of Applicant :8 14 rue Vaucanson F 69150 Decines France
(72)**Name of Inventor :**
1)PANSERI Anne Sophie
2)SIMON Romain
3)POYET Armand

(57) Abstract :
Retaining device with elastic deformation for a flexible screen of a vertically opening goods handling door. The vertically opening goods handling door according to the present invention comprises an elastic retaining device (10) which consists of retaining means (11) allowing firstly the flexible screen or curtain (12) to be held on course during its movement between an open position and a closed position and secondly in the event of an anomaly allowing the flexible screen or curtain (12) some elastic deformation without the risk of said flexible screen or curtain (12) being expelled or dislocated from the lateral uprights (13 14) and ensuring that it reverts to its initial form when the anomaly disappears.

No. of Pages : 14 No. of Claims : 11

(12) PATENT APPLICATION PUBLICATION
(19) INDIA
(22) Date of filing of Application :23/09/2013
(21) Application No.8307/DELNP/2013 A
(43) Publication Date : 19/12/2014

(54) Title of the invention : GENETIC ASSOCIATION BETWEEN RHEUMATOID ARTHRITIS AND POLYMORPHISMS IN THE SSTR2 GENE

(51) International classification :C12Q1/68
(31) Priority Document No :1103407.1
(32) Priority Date :28/02/2011
(33) Name of priority country :U.K.
(86) International Application No :PCT/GB2012/050446
Filing Date :28/02/2012
(87) International Publication No :WO 2012/117240
(61) Patent of Addition to Application Number :NA
Filing Date :NA
(62) Divisional to Application Number :NA
Filing Date :NA

(71)**Name of Applicant :**
1)FUNXIONAL THERAPEUTICS LIMITED
Address of Applicant :Building 14 A Homerton Business Centre Purbeck Road Cambridge Cambridgeshire CB2 8QL U.K.
(72)**Name of Inventor :**
1)GRAINGER David John

(57) Abstract :
This invention is directed in part to methods assays and/or kits for identifying an individual who has an autoimmune disease (such as rheumatoid arthritis) or who has an altered risk for having or developing the autoimmune disease. The methods in one aspect comprise determining the presence or absence of a nucleic acid variant within the somatostatin receptor type 2 (sstr2) gene in the individual s nucleic acids wherein the presence of the nucleic acid variant is correlated with having the autoimmune disease or the altered risk. The nucleic acid variant may for example be a single nucleotide polymorphism (SNP).

No. of Pages : 42 No. of Claims : 42

(12) PATENT APPLICATION PUBLICATION
(19) INDIA
(22) Date of filing of Application :17/09/2013
(21) Application No.8115/DELNP/2013 A
(43) Publication Date : 19/12/2014

(54) Title of the invention : COATING AGENT COMPOSITIONS COATINGS MADE THEREFROM AND EXHIBITING HIGH SCRATCH RESISTANCE AND GOOD POLISHABILITY AND USE THEREOF

(51) International classification	:C08G18/28,C08G18/62,C08G18/79
(31) Priority Document No	:61/494913
(32) Priority Date	:09/06/2011
(33) Name of priority country	:U.S.A.
(86) International Application No	:PCT/EP2012/058355
Filing Date	:07/05/2012
(87) International Publication No	:WO 2012/168014
(61) Patent of Addition to Application Number	:NA
Filing Date	:NA
(62) Divisional to Application Number	:NA
Filing Date	:NA

(71)**Name of Applicant :**
1)BASF COATINGS GMBH
Address of Applicant :Glasuritstrasse 1 48165 M¼nster Germany
(72)**Name of Inventor :**
1)GROENEWOLT Matthijs
2)WIGGER Georg
3)KHS Tilo
4)KEPLER Thomas

(57) Abstract :
The invention relates to non aqueous coating agent compositions containing: (A) at least one polyhydroxyl group containing compound; (B) at least one polyisocyanate group containing compound having free or blocked isocyanate groups; and (D) at least one catalyst for crosslinking silane groups component (B) containing at least one structural unit NR (X SiR x(OR)3 x) (I) and at least one structural unit N(X SiR x(OR)3 x)n(X SiR y(OR)3 y)m (II) provided that (i) more than 30 mole % and less than 70 mole % of the initially provided isocyanate groups in component (B) are converted to structural units (I) and (II) (ii) more than 25 mole % and less than 36 mole % of the initially provided isocyanate groups in component (B) are converted to structural units (II) and (iii) the coating agent composition contains at least one polyisocyanate group containing compound (B2) having free or blocked isocyanate groups and an acyclic aliphatic polyisocyanate body as component (B). The invention further relates to multistage coating methods and the use of the coating agent compositions.

No. of Pages : 44 No. of Claims : 15

(12) PATENT APPLICATION PUBLICATION
(19) INDIA
(22) Date of filing of Application :17/09/2013
(21) Application No.8116/DELNP/2013 A
(43) Publication Date : 19/12/2014

(54) Title of the invention : COMBINATION OF HYDROGEN AND PRESSURE SENSORS

(51) International classification :G01D21/02,H01F27/12,G01N33/26
(31) Priority Document No :13/076896
(32) Priority Date :31/03/2011
(33) Name of priority country:U.S.A.
(86) International Application No :PCT/US2012/030330
Filing Date :23/03/2012
(87) International Publication No :WO 2012/135017
(61) Patent of Addition to Application Number :NA
Filing Date :NA
(62) Divisional to Application Number :NA
Filing Date :NA

(71)**Name of Applicant :**
1)QUALITROL COMPANY LLC
Address of Applicant :1385 Fairport Road Fairport New York 14550 1309 U.S.A.
(72)**Name of Inventor :**
1)HERZ Joshua J.
2)BILLINGS David

(57) Abstract :
The invention provides a sensor assembly for determining the concentration of hydrogen in an insulating fluid in electric power generation transmission and distribution equipment. The assembly includes a housing having an opening therein communicating with the fluid a hydrogen sensor disposed in the housing and responsive to the concentration of hydrogen in the fluid and generating a signal related to the concentration of hydrogen and a pressure sensor disposed in the housing responsive to the fluid and generating a second signal indicative of the pressure of the fluid in the equipment. The assembly further includes a signal processor disposed in the housing and connected to the hydrogen sensor and the pressure sensor and responsive to the first and second signals for generating a third signal representing the concentration of hydrogen in the fluid.

No. of Pages : 22 No. of Claims : 9

(12) PATENT APPLICATION PUBLICATION
(19) INDIA
(22) Date of filing of Application :17/09/2013
(21) Application No.8117/DELNP/2013 A
(43) Publication Date : 19/12/2014

(54) Title of the invention : BULK FREEZING OF BIOPHARMACEUTICALS

(51) International classification :F26B5/06
(31) Priority Document No :61/468463
(32) Priority Date :28/03/2011
(33) Name of priority country :U.S.A.
(86) International Application No :PCT/US2012/030738
Filing Date :27/03/2012
(87) International Publication No :WO 2012/135216
(61) Patent of Addition to Application Number :NA
Filing Date :NA
(62) Divisional to Application Number :NA
Filing Date :NA

(71)**Name of Applicant :**
1)PRAXAIR TECHNOLOGY INC.
Address of Applicant :39 Old Ridgebury Road Danbury CT 06810 U.S.A.
(72)**Name of Inventor :**
1)ZHOU Ying
2)CHENG Alan
3)GRINTER Nigel
4)FOWLER Zachary
5)SEVER Robert
6)BURSAC Ranko

(57) Abstract :
A system and method for bulk freezing is provided. In one embodiment the system and method for bulk freezing includes a bulk freezing container adapted to hold at least one and preferably a plurality of bags holding a biopharmaceutical liquid. The bulk freezing container includes at least a first and second shelf having corrugations w herein the second shelf is vertically arranged above the first shelf with the bags disposed between the shelves. The bags and the corrugations of the first and second shelves define a plurality of substantially parallel flow channels through which a cryogenic cold fluid or a wanning fluid is passed to freeze and/or thaw the biopharmaceutical fluid. In another embodiment the bulk freezing system and method includes a bulk freezing container with a plurality of adjacent elongated chambers adapted for holding the biopharmaceutical fluid. The adjacent elongated chambers have side walls defining a plurality of substantially parallel flow channels between the plurality of adjacent elongated chambers through which a heat transfer medium is passed for heat exchange through the side walls of the elongated chambers to the fluid within the elongated chambers.

No. of Pages : 26 No. of Claims : 20

(12) PATENT APPLICATION PUBLICATION
(19) INDIA
(22) Date of filing of Application :11/11/2013
(21) Application No.9706/DELNP/2013 A
(43) Publication Date : 19/12/2014

(54) Title of the invention : WIPING DEVICE IN PARTICULAR WIPING DEVICE FOR A MOTOR VEHICLE PANE

(51) International classification :B60S1/38
(31) Priority Document No :102011078185.4
(32) Priority Date :28/06/2011
(33) Name of priority country :Germany
(86) International Application No :PCT/EP2012/060323
Filing Date :01/06/2012
(87) International Publication No :WO 2013/000655
(61) Patent of Addition to Application Number :NA
Filing Date :NA
(62) Divisional to Application Number :NA
Filing Date :NA

(71)**Name of Applicant :**
1)ROBERT BOSCH GMBH
Address of Applicant :Postfach 30 02 20 70442 Stuttgart Germany
(72)**Name of Inventor :**
1)DEPONDT Helmut
2)BEX Koen
3)HERINCKX Dirk

(57) Abstract :
The invention relates to a wiping device, in particular a wiping device for a motor vehicle pane, having a retaining unit (10a - lOg) with a retaining element (12a - 12g), said retaining element (12a- 12g) comprising a keder track (70a - 70g) that is provided in order to interlockingly accommodate a wiper strip (40a - 40g). According to the invention, at least one vertical wall (62a - 62g, 64a - 64g) of the keder track (70a - 70g) forms an acute angle (32a - 32g, 34a - 34g) with at least one horizontal wall (66a - 66g, 68a - 68g) of said track (70a - 70g).

No. of Pages : 25 No. of Claims : 10

(12) PATENT APPLICATION PUBLICATION
(19) INDIA
(22) Date of filing of Application :11/11/2013
(21) Application No.9707/DELNP/2013 A
(43) Publication Date : 19/12/2014

(54) Title of the invention : SYSTEMS AND METHODS FOR MERCHANDISE DISPLAY SALE AND INVENTORY CONTROL

(51) International classification :B65G59/00
(31) Priority Document No :61/482555
(32) Priority Date :04/05/2011
(33) Name of priority country :U.S.A.
(86) International Application No :PCT/US2012/036364
Filing Date :03/05/2012
(87) International Publication No :WO 2012/151425
(61) Patent of Addition to Application Number :NA
Filing Date :NA
(62) Divisional to Application Number :NA
Filing Date :NA

(71)**Name of Applicant :**
1)KIOSK INFORMATION SYSTEMS INC.
Address of Applicant :346 South Arthur Avenue Louisville Colorado 80027 U.S.A.
(72)**Name of Inventor :**
1)STARK Donald W.
2)MALONE Richard L.
3)WEIHE Jason Gary
4)GROW Roger H.

(57) Abstract :
An automated retail system according to embodiments of the present invention includes a front and/or rear product rack each rack having a plurality of bins each of which has a product door the system further including a basket moveable along an x y plane on a rail system to selectively open a product door of a product bin to permit the product within the bin to fall into the basket the basket movable to a product delivery position to release the product from the basket. Such a system may include sensors and/or scanners to determine contents of each bin such that any product may be placed in any bin and inventory of each bin or all bins may be determined at any time. The basket may be configured to move in x and y but not z directions and may also serve as the sole actuation mechanism for opening the doors.

No. of Pages : 48 No. of Claims : 47

(12) PATENT APPLICATION PUBLICATION
(19) INDIA
(22) Date of filing of Application :23/09/2013

(21) Application No.8308/DELNP/2013 A
(43) Publication Date : 19/12/2014

(54) Title of the invention : SYSTEM FOR SYNCHRONOUSLY VISUALIZING A REPRESENTATION OF FIRST AND SECOND INPUT DATA

(51) International classification	:A61B8/12,A61B6/00,A61B5/0215
(31) Priority Document No	:13/048769
(32) Priority Date	:15/03/2011
(33) Name of priority country	:U.S.A.
(86) International Application No	:PCT/EP2012/054067
Filing Date	:09/03/2012
(87) International Publication No	:WO 2012/123345
(61) Patent of Addition to Application Number	:NA
Filing Date	:NA
(62) Divisional to Application Number	:NA
Filing Date	:NA

(71)**Name of Applicant :**
1)MEDICINSK BILDTEKNIK SVERIGE AB
Address of Applicant :Glimmervgen 6 S 224 78 Lund Sweden
(72)**Name of Inventor :**
1)ARVIDSSON Adam

(57) Abstract :
A system for synchronous visualization of a representation of first input data and second input data in real time on single display unit is disclosed. The system comprises a control unit for receiving said first and second input data said control unit being arranged for displaying a synchronous representation of said first and second input data on said display unit. A method for operating the system is also disclosed.

No. of Pages : 19 No. of Claims : 15

(12) PATENT APPLICATION PUBLICATION
(19) INDIA
(22) Date of filing of Application :24/09/2013
(21) Application No.8309/DELNP/2013 A
(43) Publication Date : 19/12/2014

(54) Title of the invention : VIBRATION DAMPENING MATERIAL

(51) International classification :A42B1/08
(31) Priority Document No :13/084866
(32) Priority Date :12/04/2011
(33) Name of priority country :U.S.A.
(86) International Application No :PCT/US2012/032669
Filing Date :09/04/2012
(87) International Publication No :WO 2013/081658
(61) Patent of Addition to Application Number :NA
Filing Date :NA
(62) Divisional to Application Number :NA
Filing Date :NA

(71)**Name of Applicant :**
1)MATSCITECHNO LICENSING COMPANY
Address of Applicant :143 Viburnum Drive Kennett Square PA 19348 U.S.A.
(72)**Name of Inventor :**
1)VITO Robert A.
2)DIMARIO Carmen N.
3)FALONE Thomas

(57) Abstract :
A vibration reducing assembly including a flexible headgear (430) and at least one panel of vibration reducing material (10) secured to the flexible headgear. The at least one panel of vibration reducing mate¬ rial includes at least a first elastomer layer (12) and a reinforcement layer (14) comprising a high tensile strength fibrous material.

No. of Pages : 107 No. of Claims : 21

(12) PATENT APPLICATION PUBLICATION
(19) INDIA
(22) Date of filing of Application :20/09/2013
(21) Application No.8226/DELNP/2013 A
(43) Publication Date : 19/12/2014

(54) Title of the invention : VIRTUAL POWER STATION

(51) International classification :H02J3/14,H02J13/00
(31) Priority Document No :1103161.4
(32) Priority Date :23/02/2011
(33) Name of priority country :U.K.
(86) International Application No :PCT/GB2012/050417
Filing Date :23/02/2012
(87) International Publication No :WO 2012/114114
(61) Patent of Addition to Application Number :NA
Filing Date :NA
(62) Divisional to Application Number :NA
Filing Date :NA

(71)**Name of Applicant :**
1)RESPONSIVELOAD LIMITED
Address of Applicant :Level 1 1 Pemberton Row London EC4A 3BG U.K.
(72)**Name of Inventor :**
1)CARVER Andrew John
2)WARREN Joseph Daniel
3)BLOOR Katie

(57) Abstract :
The virtual power station (10) includes electrical power generators (20) for providing electrical power via an electrical power distribution network (40 50) to power consuming devices (60). The virtual power station (10) further includes responsive load controls (120) with associated responsive loads (30). The responsive load controls (120) control power consumption of the responsive loads (30) with respect to a physical variable of the electrical power distribution network (40 50) for stabilizing operation of the electrical power distribution network (40 50). The responsive loads (30) execute a response signature and monitor and communicate their power demand arising from execution of the response signature to a central controller (140). From the information supplied by the responsive loads (30) the central controller (140) determines a measure of available responsive load capacity which in turn offers improvements in the management of the supply of power by the virtual power station.

No. of Pages : 27 No. of Claims : 26

(12) PATENT APPLICATION PUBLICATION
(19) INDIA
(22) Date of filing of Application :20/09/2013
(21) Application No.8227/DELNP/2013 A
(43) Publication Date : 19/12/2014

(54) Title of the invention : TURBULENCE BAR ASSEMBLY

(51) International classification :D21F5/02
(31) Priority Document No :13/099885
(32) Priority Date :03/05/2011
(33) Name of priority country :U.S.A.
(86) International Application No :PCT/US2012/036052
Filing Date :02/05/2012
(87) International Publication No :WO 2012/151235
(61) Patent of Addition to Application Number :NA
Filing Date :NA
(62) Divisional to Application Number :NA
Filing Date :NA

(71)**Name of Applicant :**
1)KADANT JOHNSON INC.
Address of Applicant :805 Wood Street Three Rivers MI 49093 U.S.A.
(72)**Name of Inventor :**
1)WEDEL Gregory L.
2)IVES Alan T.
3)HENRY Timothy N.

(57) Abstract :
A turbulence bar assembly for a cylinder that extends in an axial direction includes a plurality of bars that extend in the axial direction and at least one hoop. The at least one hoop has one or more hoop segments that are connected to the plurality of bars and one or more couplers that are in engagement with the one or more hoop segments to expand and contract a radial dimension of the at least one hoop in response to movement of an adjustment block in the axial direction.

No. of Pages : 23 No. of Claims : 15

(12) PATENT APPLICATION PUBLICATION
(19) INDIA
(22) Date of filing of Application :20/09/2013
(21) Application No.8228/DELNP/2013 A
(43) Publication Date : 19/12/2014

(54) Title of the invention : SELECTIVE LYSIS OF CELLS BY IONIC SURFACTANTS

(51) International classification :G01N33/50,C12N5/00
(31) Priority Document No :11305692.3
(32) Priority Date :06/06/2011
(33) Name of priority country :EPO
(86) International Application No :PCT/EP2012/057897
Filing Date :30/04/2012
(87) International Publication No :WO 2012/168003
(61) Patent of Addition to Application Number :NA
Filing Date :NA
(62) Divisional to Application Number :NA
Filing Date :NA

(71)**Name of Applicant :**
1)BIOCARTIS S.A.
Address of Applicant :EPFL Quartier Innovation G CH 1015 Lausanne Switzerland
(72)**Name of Inventor :**
1)DOBBELAER Irene
2)NEERKEN Sieglinde
3)VAN DE WIEL Paul
4)VAN MEERBERGEN Bart
5)PENTERMAN Roel

(57) Abstract :
The present invention discloses methods kits of parts and devices for the selective lysis of eukaryotic cells in a sample comprising micro organisms such as bacteria unicellular fungi. The selective lysis is obtained by incubating the sample in an ionic surfactant under alkaline conditions.

No. of Pages : 23 No. of Claims : 16

(12) PATENT APPLICATION PUBLICATION
(19) INDIA
(22) Date of filing of Application :11/11/2013
(21) Application No.9681/DELNP/2013 A
(43) Publication Date : 19/12/2014

(54) Title of the invention : PROTECTIVE CASE AND METHODS OF MAKING

(51) International classification :H05K5/00
(31) Priority Document No :61/475639
(32) Priority Date :14/04/2011
(33) Name of priority country :U.S.A.
(86) International Application No :PCT/US2012/033678
Filing Date :13/04/2012
(87) International Publication No :WO 2012/142524
(61) Patent of Addition to Application Number :NA
Filing Date :NA
(62) Divisional to Application Number :NA
Filing Date :NA

(71)**Name of Applicant :**
1)G FORM LLC
Address of Applicant :233 Richmond Street Providence RI 02903 U.S.A.
(72)**Name of Inventor :**
1)WYNER Daniel M.
2)FOX Richard B.
3)GARRARD Richard L.
4)CAFARO Thomas F.
5)MACRINA Maria E.
6)THORN (ne ROGERS) Stephanie

(57) Abstract :
Disclosed is a protective case for an electronic device. The protective case has two layers an inner cushion insert that surrounds a portion of the electronic device and an outer elastomeric shell. The cushion insert includes raised impact portions that extend through the cover and that are capable of absorbing shocks from impacts.

No. of Pages : 48 No. of Claims : 34

(12) PATENT APPLICATION PUBLICATION
(19) INDIA
(22) Date of filing of Application :11/11/2013
(21) Application No.9682/DELNP/2013 A
(43) Publication Date : 19/12/2014

(54) Title of the invention : CLEAR HAIR CARE COMPOSITION COMPRISING BASE OIL AND HYDROPHILIC COMPONENT

(51) International classification :A61K8/34
(31) Priority Document No :61/492843
(32) Priority Date :03/06/2011
(33) Name of priority country :U.S.A.
(86) International Application No :PCT/US2012/039809
Filing Date :29/05/2012
(87) International Publication No :WO 2012/166698
(61) Patent of Addition to Application Number :NA
Filing Date :NA
(62) Divisional to Application Number :NA
Filing Date :NA

(71)**Name of Applicant :**
1)THE PROCTER & GAMBLE COMPANY
Address of Applicant :One Procter & Gamble Plaza Cincinnati Ohio 45202 U.S.A.
(72)**Name of Inventor :**
1)HASEGAWA Jun
2)UEHARA Nobuaki
3)OKU Taisuke

(57) Abstract :
Disclosed is a non aqueous clear hair care composition comprising by weight: from about 61% to about 99.9% of a base oil consisting of: an isoparaffin a mineral oil a volatile silicone compound and mixtures thereof; from about 0.0005% to about 0.1% of an hydrophilic material; from about 0.035% to about 15% of a liquid fatty alcohol having 10 carbon atoms or more; wherein the weight ratio of the hydrophilic material to the liquid fatty alcohol is from about 1:70 to about 1:800. By the use of liquid fatty alcohol hydrophilic materials are dissolved in the base oil and the composition has a clear product appearance.

No. of Pages : 18 No. of Claims : 9

(12) PATENT APPLICATION PUBLICATION
(19) INDIA
(22) Date of filing of Application :05/11/2013
(21) Application No.9517/DELNP/2013 A
(43) Publication Date : 19/12/2014

(54) Title of the invention : METHOD FOR DEPOSITING LAYERS ON A GLASS SUBSTRATE BY MEANS OF LOW PRESSURE PECVD

(51) International classification	:C23C16/40,C23C16/503,C23C16/34
(31) Priority Document No	:be 2011/0322
(32) Priority Date	:25/05/2011
(33) Name of priority country	:Belgium
(86) International Application No	:PCT/EP2012/059734
Filing Date	:24/05/2012
(87) International Publication No	:WO 2012/160145
(61) Patent of Addition to Application Number	:NA
Filing Date	:NA
(62) Divisional to Application Number	:NA
Filing Date	:NA

(71)**Name of Applicant :**
1)AGC GLASS EUROPE
Address of Applicant :R&D Centre Chausse de La Hulpe 166 B 1170 Bruxelles (Watermael Boitsfort) Belgium
(72)**Name of Inventor :**
1)MAHIEU Stijn
2)TIXHON Eric
3)VAN STUYVENBERG Martin
4)WIAME Hugues

(57) Abstract :
The invention relates to a method for producing metal or semiconductor oxide, nitride or oxynitride films on a substrate, by means of the PECVD method, including the steps that involve: (i) having a low-pressure PECVD device including at least one plasma source that includes at least one electrode connected to an AC, DC, or drawn DC generator for depositing said films on the substrate; and (ii) applying electrical power to the plasma source and applying, on the substrate, an oxide film gas precursor made of metal or semiconductor nitrides or oxynitrides and a reactive gas made of oxygen, oxygen derivatives, or nitrogen derivatives. The invention also relates to metal or semiconductor oxide, nitride, or oxynitride films obtained by the method.

No. of Pages : 33 No. of Claims : 15

(12) PATENT APPLICATION PUBLICATION
(19) INDIA
(22) Date of filing of Application :05/11/2013
(21) Application No.9519/DELNP/2013 A
(43) Publication Date : 19/12/2014

(54) Title of the invention : RAPID FLOTATION DEVICE FOR WATER LADEN WITH SUSPENDED MATTER AND METHOD FOR IMPLEMENTING SAME

(51) International classification :C02F1/24,B03D1/24,B01D21/24
(31) Priority Document No :11 54109
(32) Priority Date :12/05/2011
(33) Name of priority country :France
(86) International Application No :PCT/IB2012/052225
Filing Date :03/05/2012
(87) International Publication No :WO 2012/153245
(61) Patent of Addition to Application Number :NA
Filing Date :NA
(62) Divisional to Application Number :NA
Filing Date :NA

(71)**Name of Applicant :**
1)DEGREMONT
Address of Applicant :Tour CB21 16 place de lIris F 92040 Paris La Dfense France
(72)**Name of Inventor :**
1)LE QUESNE Fran§ois
2)VION Patrick

(57) Abstract :
The invention relates to a rapid flotation device in particular using dissolved air for treating water laden with suspended matter (MES). The device comprises a mixing area (B) separated from a flotation area (C) by a wall (n) above which the liquid to be treated passes from the mixing area. The bottom portion of the flotation area comprises: a perforated floor (1) located above an apron (R) a floated water discharge being provided under the floor and leading to an outlet system (3); and at least two separate channels (2) which are oriented in the direction of flow of the water and are provided under the floor (1) and under optional structures (w) extending from the floor to a point upstream of the outlet system (3). The downstream end (2.1) of the channels is open and located above the floor level and a discharge means (V) is provided for each channel at the end of the downstream bottom portion of said channel.

No. of Pages : 22 No. of Claims : 14

(12) PATENT APPLICATION PUBLICATION
(19) INDIA
(22) Date of filing of Application :17/10/2013
(21) Application No.9003/DELNP/2013 A
(43) Publication Date : 19/12/2014

(54) Title of the invention : METHOD AND APPARATUS FOR SOLID STATE LIGHTING WINDOW BY AN AT LEAST PARTIALLY TRANSPARENT ONE SIDE EMITTING OLED

(51) International classification :H01L51/52
(31) Priority Document No :61/472088
(32) Priority Date :05/04/2011
(33) Name of priority country :U.S.A.
(86) International Application No :PCT/US2012/032008
Filing Date :03/04/2012
(87) International Publication No :WO 2012/138659
(61) Patent of Addition to Application Number :NA
Filing Date :NA
(62) Divisional to Application Number :NA
Filing Date :NA

(71)**Name of Applicant :**
1)UNIVERSITY OF FLORIDA RESEARCH FOUNDATION INC.
Address of Applicant :223 Grinter Hall Gainesville FL 32611 U.S.A.
2)NANOHOLDINGS LLC
(72)**Name of Inventor :**
1)SO Franky
2)KIM Do Young
3)PRADHAN Bhabendra K.

(57) Abstract :
Embodiments of the subject invention relate to a method and apparatus for providing an at: least partially transparent one side emitting OLED. The at least partially transparent one side emitting OLED can include a mirror such as a mirror substrate substrate with a transparent anode and a transparent cathode. The mirror can allow at least a portion of the visible spectrum of light to pass through while also reflecting at least another portion of the visible spectrum of light. The mirror can reflect at least a portion of the visible light emitted by a light emitting layer of the OLED incident on a first surface of the mirror while allowing another portion of the visible light incident on a second surface of the mirror to pass through the mirror.

No. of Pages : 30 No. of Claims : 33

(12) PATENT APPLICATION PUBLICATION
(19) INDIA
(22) Date of filing of Application :17/10/2013
(21) Application No.9004/DELNP/2013 A
(43) Publication Date : 19/12/2014

(54) Title of the invention : NANOTUBE DISPERSANTS AND DISPERSANT FREE NANOTUBE FILMS THEREFROM

(51) International classification :C08L1/02,C08K3/04,C08K7/24
(31) Priority Document No :61/471582
(32) Priority Date :04/04/2011
(33) Name of priority country :U.S.A.
(86) International Application No :PCT/US2012/031950
Filing Date :03/04/2012
(87) International Publication No :WO 2012/138632
(61) Patent of Addition to Application Number :NA
Filing Date :NA
(62) Divisional to Application Number :NA
Filing Date :NA

(71)**Name of Applicant :**
1)UNIVERSITY OF FLORIDA RESEARCH FOUNDATION INC.
Address of Applicant :223 Grinter Hall Gainesville FL 32611 U.S.A.
(72)**Name of Inventor :**
1)WALCZAK Ryan M.
2)REYNOLDS John R.
3)RINZLER Andrew G.
4)SPRING Andrew M.
5)VASILYEVA Svetlana V.
6)WADHWA Pooja

(57) Abstract :
A degradable polymeric nanotube (NT) dispersant comprises a multiplicity of NT associative groups that are connected to a polymer backbone by a linking group where there are cleavable groups within the polymer backbone and/or the linking groups such that on a directed change of conditions, bond breaking of the cleavable groups results in residues from the degradable polymeric NT dispersant in a manner where the associative groups are uncoupled from other associative groups rendering the associative groups monomelic in nature. The degradable polymeric nanotube (NT) dispersant can be combined with carbon NTs to form a NT dispersion that can be deposited to form a NT film or other structure, by air brushing, electrostatic spraying, ultrasonic spraying ink jet printing, roll-to-roll coating, or dip coating. The deposition can render a NT film that is of a uniform thickness or is patterned with various thicknesses. Upon deposition of the film the degradable polymeric nanotube (NT) dispersant can be cleaved and the cleavage residues removed from the film to yield a film where contact between NTs is unencumbered by dispersants, resulting in highly conductive NT films.

No. of Pages : 35 No. of Claims : 29

(12) PATENT APPLICATION PUBLICATION
(19) INDIA
(22) Date of filing of Application :17/10/2013
(21) Application No.9005/DELNP/2013 A
(43) Publication Date : 19/12/2014

(54) Title of the invention : HERBICIDAL COMPOSITIONS

(51) International classification :A01N43/40,A01N25/32
(31) Priority Document No :1109309.3
(32) Priority Date :02/06/2011
(33) Name of priority country :U.K.
(86) International Application No :PCT/EP2012/060236
Filing Date :31/05/2012
(87) International Publication No :WO 2012/164013
(61) Patent of Addition to Application Number :NA
Filing Date :NA
(62) Divisional to Application Number :NA
Filing Date :NA

(71)**Name of Applicant :**
1)SYNGENTA LIMITED
Address of Applicant :European Regional Centre Priestley Road Surrey Research Park Guildford Surrey GU2 7YH U.K.
(72)**Name of Inventor :**
1)WHITTINGHAM William Guy
2)SPINNEY Mark
3)HALL Gavin John
4)DUPEN Natalie

(57) Abstract :
The present invention relates to compositions for protecting crop of useful plants from the harmful effects of certain pyridine derivative herbicides as well as methods for protecting crops of useful plants from the harmful effects of these herbicides and methods for combating weeds in crops of useful plants.

No. of Pages : 38 No. of Claims : 13

(12) PATENT APPLICATION PUBLICATION
(19) INDIA
(22) Date of filing of Application :17/10/2013
(21) Application No.9006/DELNP/2013 A
(43) Publication Date : 19/12/2014

(54) Title of the invention : METHOD AND APPARATUS FOR DIAGNOSING BLOOD PARASITES

(51) International classification :G01N21/53,G01N15/00,G01N33/569
(31) Priority Document No :61/486059
(32) Priority Date :13/05/2011
(33) Name of priority country :U.S.A.
(86) International Application No :PCT/US2012/037830
Filing Date :14/05/2012
(87) International Publication No :WO 2012/158638
(61) Patent of Addition to Application Number :NA
Filing Date :NA
(62) Divisional to Application Number :NA
Filing Date :NA

(71)**Name of Applicant :**
1)BECKMAN COULTER INC.
Address of Applicant :250 S. Kraemer Blvd. Brea CA 92821 U.S.A.
(72)**Name of Inventor :**
1)HAN Kyungja
2)LU Jiuliu
3)RILEY John S.
4)ROSSMAN Mark A.
5)SIMON LOPEZ Ramon

(57) Abstract :
A method and apparatus for detecting parasites in blood samples. The method includes mixing a blood sample with a lytic reagent to lyse red blood cells; measuring particles of the lysed blood sample in a particle analyzer to obtain an axial light loss measurement; and differentiating the parasite particle population in the lysed blood sample in response to the axial light loss measurement. In one embodiment, the method includes measuring light scattering and differentiating a parasite particle population by comparing the light scattering measurement and the axial light loss measurement. The system for detecting a parasite population in a blood sample includes a particle analyzer to obtain an axial light loss measurement; and a computer for using an axial light loss measurement to determine of a parasite particle population.

No. of Pages : 35 No. of Claims : 26

(12) PATENT APPLICATION PUBLICATION
(19) INDIA
(22) Date of filing of Application :23/09/2013
(21) Application No.8271/DELNP/2013 A
(43) Publication Date : 19/12/2014

(54) Title of the invention : RECEIVER DEVICE AND RECEIVER METHOD

(51) International classification :H04N5/44,H04N7/173
(31) Priority Document No :2011081017
(32) Priority Date :31/03/2011
(33) Name of priority country :Japan
(86) International Application No :PCT/JP2012/057423
Filing Date :23/03/2012
(87) International Publication No :WO 2012/133133
(61) Patent of Addition to Application Number :NA
Filing Date :NA
(62) Divisional to Application Number :NA
Filing Date :NA

(71)**Name of Applicant :**
1)SONY CORPORATION
Address of Applicant :1 7 1 Konan Minato ku Tokyo 1080075 Japan
(72)**Name of Inventor :**
1)IMAI Tadashi
2)KAIDA Takayuki
3)KAWAKAMI Satoru
4)MASUMURA Hitoshi

(57) Abstract :
A first high frequency processing unit detects a first broadcasting wave transmitted using a first frequency band, and extracts a first high frequency signal. Further, a second high frequency processing unit detects a second broadcasting wave transmitted using a second frequency band different from the first frequency band, and extracts a second high frequency signal. Furthermore, at least one local oscillator generates a local oscillation signal used in the first high frequency processing unit and the second high frequency processing unit.

No. of Pages : 57 No. of Claims : 14

(12) PATENT APPLICATION PUBLICATION
(19) INDIA
(22) Date of filing of Application :23/09/2013
(21) Application No.8272/DELNP/2013 A
(43) Publication Date : 19/12/2014

(54) Title of the invention : *CLOSTRIDIUM DIFFICILE* GROWTH INHIBITOR

(51) International classification :A61K35/74,A61K31/19,A61K31/192
(31) Priority Document No :2011072462
(32) Priority Date :29/03/2011
(33) Name of priority country :Japan
(86) International Application No :PCT/JP2012/056628
Filing Date :15/03/2012
(87) International Publication No :WO 2012/132913
(61) Patent of Addition to Application Number :NA
Filing Date :NA
(62) Divisional to Application Number :NA
Filing Date :NA

(71)**Name of Applicant :**
1)MEIJI CO. LTD.
Address of Applicant :2 10 Shinsuna 1 chome Koto ku Tokyo 1368908 Japan
(72)**Name of Inventor :**
1)TOSHIMITSU Takayuki
2)IKEGAMI Shuji
3)ITOU Hiroyuki

(57) Abstract :
The present invention provides Clostridium difficile growth-inhibiting agents containing as an active ingredient a propionic acid bacterium and/or a fermentation product 5 thereof, and prebiotic compositions having a Clostridium difficile growth-inhibiting effect. Moreover, the present invention provides Clostridium difficile growth-inhibiting agents containing l,4-dihydroxy-2-naphthoic acid (DHNA) and/or an organic acid as an active ingredient, prebiotic compositions having a Clostridium difficile growth-inhibiting effect, and dietary compositions containing these. Furthermore, the present invention provides methods 10 for inhibiting Clostridium difficile proliferation comprising ingesting or administering these.

No. of Pages : 22 No. of Claims : 9

(12) PATENT APPLICATION PUBLICATION
(19) INDIA
(22) Date of filing of Application :23/09/2013
(21) Application No.8274/DELNP/2013 A
(43) Publication Date : 19/12/2014

(54) Title of the invention : TWIN ROLL CASTER AND METHOD OF CONTROL THEREOF

(51) International classification :B22D11/06,B22D11/08
(31) Priority Document No :2011099318
(32) Priority Date :27/04/2011
(33) Name of priority country :Japan
(86) International Application No :PCT/AU2012/000444
Filing Date :27/04/2012
(87) International Publication No :WO 2012/145798
(61) Patent of Addition to Application Number :NA
Filing Date :NA
(62) Divisional to Application Number :NA
Filing Date :NA

(71)**Name of Applicant :**
1)BLUESCOPE STEEL LIMITED
Address of Applicant :Level 11 120 Collins Street Melbourne Victoria 3000 Australia
2)IHI CORPORATION
3)CASTRIP LLC
(72)**Name of Inventor :**
1)NAKAYAMA Katsumi
2)HIRATA Atsushi
3)OTSUKA Hiroyuki
4)FUKASE Hisahiko

(57) Abstract :
A twin roll caster includes a pair of casting rolls arranged parallel to one another with a gap between the casting rolls and side dams parallel to one another forming a pool between the casting rolls and the side dams. A side dam support is provided that applies a compression force on at least one of the side darns at a compression angle relative to the axis of the casting rolls.

No. of Pages : 28 No. of Claims : 26

(12) PATENT APPLICATION PUBLICATION
(19) INDIA
(22) Date of filing of Application :23/09/2013
(21) Application No.8275/DELNP/2013 A
(43) Publication Date : 19/12/2014

(54) Title of the invention : PACKAGE METHOD FOR MANUFACTURING A PACKAGE AND USE OF SUCH PACKAGE

(51) International classification :B65D75/38,B65D75/58
(31) Priority Document No :11503745
(32) Priority Date :29/04/2011
(33) Name of priority country :Sweden
(86) International Application No :PCT/EP2012/057006
Filing Date :17/04/2012
(87) International Publication No :WO 2012/146511
(61) Patent of Addition to Application Number :NA
Filing Date :NA
(62) Divisional to Application Number :NA
Filing Date :NA

(71)**Name of Applicant :**
1)GAMBRO LUNDIA AB
Address of Applicant :P.O. Box 10101 SE 220 10 Lund Sweden
(72)**Name of Inventor :**
1)KIISKINEN Mauro

(57) Abstract :
A package (1) comprises at least a first and a second side wall (2 3) bonded to each other along at least one seam line (4) forming a bond. The bond is peelable along at least a portion of the seam line (4). A first grip portion (8) is formed on the first side wall (2) formed by a first folded over portion (5) of the first side wall (2) folded along a first fold line (6) and a second fold line (7). The first folded over portion (5) includes three layers of the first side wall (2) and all layers in the first folded over portion (5) are included in the bond. A method of manufacturing a package (1) is also disclosed as well as use of a package (1) as outer protective package for a container containing a medical solution.

No. of Pages : 24 No. of Claims : 17

(12) PATENT APPLICATION PUBLICATION
(19) INDIA
(22) Date of filing of Application :25/09/2013
(21) Application No.8349/DELNP/2013 A
(43) Publication Date : 19/12/2014

(54) Title of the invention : NON AQUEOUS DRILLING ADDITIVE USEFUL TO PRODUCE A FLAT TEMPERATURE RHEOLOGY PROFILE

(51) International classification :C09K8/22
(31) Priority Document No :13/104286
(32) Priority Date :10/05/2011
(33) Name of priority country :U.S.A.
(86) International Application No :PCT/US2012/035819
Filing Date :30/04/2012
(87) International Publication No :WO 2012/154437
(61) Patent of Addition to Application Number :NA
Filing Date :NA
(62) Divisional to Application Number :NA
Filing Date :NA

(71)**Name of Applicant :**
1)ELEMENTIS SPECIALTIES INC.
Address of Applicant :469 Old Trenton Road East Windsor NJ 08512 U.S.A.
(72)**Name of Inventor :**
1)DINO David
2)CHEN Yanhui

(57) Abstract :
A method of providing a substantially constant rheological profile of an oil based drilling fluid over a temperature range of about 120 degrees Fahrenheit to about 400 degrees Fahrenheit. The method comprises adding a drilling fluid additive to the drilling fluid wherein the drilling fluid additive consists essentially of a polyamide and a set of at least one or more mono carboxyl units. The polyamide has (a) repeat units of (i) a poly carboxyl unit with at least two carboxytic moieties; and (ii) a polyamine unit having an amine functionality of two or more and the one or more mono carboxyl units being positioned on the polyamide at a position selected from the group consisting of: an end position a pendant position and combinations thereof.

No. of Pages : 32 No. of Claims : 26

(12) PATENT APPLICATION PUBLICATION
(19) INDIA
(22) Date of filing of Application :25/09/2013
(21) Application No.8350/DELNP/2013 A
(43) Publication Date : 19/12/2014

(54) Title of the invention : TRANSMISSION DEVICE TRANSMISSION METHOD RECEIVING DEVICE RECEIVING METHOD PROGRAM AND BROADCASTING SYSTEM

(51) International classification	:H04N7/173,H04H20/95,H04H60/13
(31) Priority Document No	:61/470191
(32) Priority Date	:31/03/2011
(33) Name of priority country	:U.S.A.
(86) International Application No	:PCT/JP2012/057227
Filing Date	:21/03/2012
(87) International Publication No	:WO 2012/133064
(61) Patent of Addition to Application Number	:NA
Filing Date	:NA
(62) Divisional to Application Number	:NA
Filing Date	:NA

(71)**Name of Applicant :**
1)SONY CORPORATION
Address of Applicant :1 7 1 Konan Minato ku Tokyo 1080075 Japan
(72)**Name of Inventor :**
1)KITAZATO Naohisa
2)TSUKAGOSHI Ikuo

(57) Abstract :
The present invention is to realize service of data broadcasting content that can be in conjunction with show, CM, etc. [Solving Means] A controller supplies metadata in which trigger information relating to control of an application program to be executed in conjunction with content in a receiving device is stored, and size information.for burying the metadata in a user data area of an encoded audio stream. An audio encoder generates the encoded audio stream in which the metadata storing the trigger information is buried in the user data area based on the size information. A transmitter transmits the generated encoded audio stream to the receiving device. The present disclosure can be applied to the case of realizing data broadcasting in the United States and so forth for example.

No. of Pages : 145 No. of Claims : 16

(12) PATENT APPLICATION PUBLICATION
(19) INDIA
(22) Date of filing of Application :25/09/2013
(21) Application No.8351/DELNP/2013 A
(43) Publication Date : 19/12/2014

(54) Title of the invention : METHOD FOR PRODUCING WATER ABSORBING RESIN

(51) International classification :C08F2/32
(31) Priority Document No :2011095344
(32) Priority Date :21/04/2011
(33) Name of priority country :Japan
(86) International Application No :PCT/JP2012/060629
Filing Date :19/04/2012
(87) International Publication No :WO 2012/144566
(61) Patent of Addition to Application Number :NA
Filing Date :NA
(62) Divisional to Application Number :NA
Filing Date :NA

(71)**Name of Applicant :**
1)SUMITOMO SEIKA CHEMICALS CO. LTD.
Address of Applicant :346 1 Miyanishi Harima cho Kako gun Hyogo 6750145 Japan
(72)**Name of Inventor :**
1)FUKUDOME Shinya
2)HINAYAMA Tetsuhiro
3)HONDA Noriko
4)TAKATORI Junichi

(57) Abstract :
The invention provides a novel method for producing a water-absorbent resin comprising: subjecting at least one watersoluble ethylenic unsaturated monomer to reversed-phase 5 suspension polymerization in a petroleum hydrocarbon dispersion medium, the reversed-phase suspension polymerization being conducted using a 0.00005 to 0.00016 mol of water-soluble azo initiator for radical polymerization per mol of the water-soluble ethylenic unsaturated monomer in the presence of 0.000015 to 10 0.00015 mol of hypophosphorous compound per mol of the watersoluble ethylenic unsaturated monomer. According to the method, the environmental impact can be lessened by reducing the amount of petroleum hydrocarbon dispersion medium released to the outside of the system, and the 15 method makes it possible to obtain a water-absorbent resin having a high water-retention capacity and water-absorption capacity under a load, and a small content of water soluble component at the same time.

No. of Pages : 39 No. of Claims : 7

(12) PATENT APPLICATION PUBLICATION
(19) INDIA
(22) Date of filing of Application :17/10/2013
(21) Application No.9007/DELNP/2013 A
(43) Publication Date : 19/12/2014

(54) Title of the invention : LABORATORY PRODUCT TRANSPORT ELEMENT AND PATH ARRANGEMENT

(51) International classification :G01N35/04
(31) Priority Document No :61/486108
(32) Priority Date :13/05/2011
(33) Name of priority country :U.S.A.
(86) International Application No :PCT/US2012/037527
Filing Date :11/05/2012
(87) International Publication No :WO 2012/158520
(61) Patent of Addition to Application Number :NA
Filing Date :NA
(62) Divisional to Application Number :NA
Filing Date :NA

(71)**Name of Applicant :**
1)BECKMAN COULTER INC.
Address of Applicant :250 S. Kraemer Blvd. Brea California 92821 U.S.A.
(72)**Name of Inventor :**
1)EBERHARDT Michael
2)MUELLER Martin
3)WIESSNER Sebastian
4)MOIX Thomas
5)DING Guillaume
6)ZOETHOUT Jurjen

(57) Abstract :
The invention concerns a laboratory product transport element for a laboratory transport system with an energy receiver and/or energy accumulator to provide drive power at least one signal receiver to receive control signals a control unit to generate drive signals as a function of at least one control signal obtained from the at least one signal receiver movement devices for independent movement of the laboratory product transport element on a transfer path as a function of the drive signals of the control unit in which the drive devices are driven by the drive power and at least one holder to hold a laboratory product being transported. The invention also concerns a laboratory transport system with at least one laboratory product transport element according to an embodiment of the invention and a transfer path arrangement. The invention also concerns methods for operation of laboratory transport systems according to an embodiment of the invention.

No. of Pages : 92 No. of Claims : 68

(12) PATENT APPLICATION PUBLICATION
(19) INDIA
(22) Date of filing of Application :17/10/2013
(21) Application No.9008/DELNP/2013 A
(43) Publication Date : 19/12/2014

(54) Title of the invention : THIAZOLE DERIVATIVES

(51) International classification :C07D277/56,C07D417/14,C07D417/04
(31) Priority Document No :61/489007
(32) Priority Date :23/05/2011
(33) Name of priority country :U.S.A.
(86) International Application No :PCT/US2012/033200
Filing Date :12/04/2012
(87) International Publication No :WO 2012/161879
(61) Patent of Addition to Application Number :NA
Filing Date :NA
(62) Divisional to Application Number :NA
Filing Date :NA

(71)**Name of Applicant :**
1)MERCK PATENT GMBH
Address of Applicant :Frankfurter Strasse 250 64293 Darmstadt Germany
(72)**Name of Inventor :**
1)KARRA Srinivasa R.
2)STAEHLE Wolfgang
3)STAUB Eike
4)WUCHERER PLIETKER Margarita

(57) Abstract :
Compounds of the formula I in which R, R , X and Y have the meanings indicated in Claim 1, are inhibitors of TBKl and IKKe and can be employed, inter alia, for the treatment of cancer and inflammatory diseases.

No. of Pages : 95 No. of Claims : 14

(12) PATENT APPLICATION PUBLICATION
(19) INDIA
(22) Date of filing of Application :20/09/2013
(21) Application No.8236/DELNP/2013 A
(43) Publication Date : 19/12/2014

(54) Title of the invention : PLANETARY GEAR ARRANGEMENT FOR A SEAT ADJUSTMENT MECHANISM AND METHOD FOR OPERATING SUCH A PLANETARY GEAR ARRANGEMENT

(51) International classification	:B60N2/225,H02K41/06,H02K7/116
(31) Priority Document No	:10 2011 100 851.2
(32) Priority Date	:06/05/2011
(33) Name of priority country	:Germany
(86) International Application No	:PCT/EP2012/058312
Filing Date	:04/05/2012
(87) International Publication No	:WO 2012/152727
(61) Patent of Addition to Application Number	:NA
Filing Date	:NA
(62) Divisional to Application Number	:NA
Filing Date	:NA

(71)**Name of Applicant :**
1)JOHNSON CONTROLS GMBH
Address of Applicant :Industriestrae 20 30 51399 Burscheid Germany
(72)**Name of Inventor :**
1)KIENKE Ingo

(57) Abstract :
The invention relates to a planetary gear arrangement (P to P) for a seat adjustment mechanism, said planetary gear arrangement comprising at least one inner, externally toothed fitting part (2) and an outer, internally toothed fitting part (3),which fitting parts are pivotable in relation to each other about a pivot axis, wherein the inner, externally toothed fitting part (2)is arranged in the outer, internally toothed fitting part (3) in such a manner that an external toothing (7) of the inner, externally toothed fitting part (2) rolls along an internal toothing (8) of the outer, internally toothed fitting part (3). According to the invention, a plurality of electric magnetizing coils are arranged annularly on the outer, internally toothed fitting part (3), said magnetizing coils being activatable alternately in an encircling manner in the circumferential direction of the outer, internally toothed fitting part (3) such that the magnetic field of each magnetizing coil acts on the inner, externally toothed fitting part (2) and sets the latter into a rotatory movement relative to the outer, internally toothed fitting part (3). Furthermore, the invention relates to a method for operating a planetary gear arrangement (P, P to P) for a seat adjustment mechanism.

No. of Pages : 30 No. of Claims : 10

(12) PATENT APPLICATION PUBLICATION
(19) INDIA
(22) Date of filing of Application :20/09/2013
(21) Application No.8237/DELNP/2013 A
(43) Publication Date : 19/12/2014

(54) Title of the invention : DETONATION OF EXPLOSIVES

(51) International classification :F42B3/12,F42B3/18,F42D1/05
(31) Priority Document No :2011/01370
(32) Priority Date :21/02/2011
(33) Name of priority country :South Africa
(86) International Application No :PCT/IB2012/050757
Filing Date :20/02/2012
(87) International Publication No :WO 2012/114251
(61) Patent of Addition to Application Number :NA
Filing Date :NA
(62) Divisional to Application Number :NA
Filing Date :NA

(71)**Name of Applicant :**
1)AEL MINING SERVICES LIMITED
Address of Applicant :AECI Place 23/24 The Woodlands Woodlands Drive Woodmead 2191 Sandton South Africa
(72)**Name of Inventor :**
1)MULLER Elmar
2)HALLIDAY Pieter Stephanus Jacobus
3)MORGAN Clifford Gordon
4)DASTOOR Paul
5)BELCHER Warwick
6)ZHOU Xiaojing
7)BRYANT Glenn

(57) Abstract :
An explosives detonator system (10) comprises a detonator housing (13) within which is provided a detonation circuit (17) that comprises a conductive pathway (16) having a fuse head (14) integrated therewith such that the conductive pathway (16) passes along both electrodes and a resistive bridge of the fuse head (14). An uncharged chargeable voltage source (12) is also integrated with the detonation circuit (17) and is electrically sensitive to a charging property which is included in a charging signal. Exposure to the charging property charges the voltage source (12) thereby rendering it capable of generating a potential difference between the electrodes at least to equal the breakdown voltage of the resistive bridge. The charging property is any one or more of a charging light pulse a charging temperature a charging pressure and a charging radio frequency.

No. of Pages : 35 No. of Claims : 19

(12) PATENT APPLICATION PUBLICATION
(19) INDIA
(22) Date of filing of Application :20/09/2013
(21) Application No.8238/DELNP/2013 A
(43) Publication Date : 19/12/2014

(54) Title of the invention : CHAIN GUIDE AND CHAIN TENSIONER DEVICE

(51) International classification :F16H7/18,F16H7/08
(31) Priority Document No :2011037504
(32) Priority Date :23/02/2011
(33) Name of priority country :Japan
(86) International Application No :PCT/JP2012/053555
Filing Date :15/02/2012
(87) International Publication No :WO 2012/114959
(61) Patent of Addition to Application Number :NA
Filing Date :NA
(62) Divisional to Application Number :NA
Filing Date :NA

(71)**Name of Applicant :**
1)NTN CORPORATION
Address of Applicant :3 17 Kyomachibori 1 chome Nishi ku Osaka shi Osaka 5500003 Japan
(72)**Name of Inventor :**
1)KATO Akio
2)YAMASHITA Takahiro
3)ABE Katsufumi

(57) Abstract :
The present invention provides a chain guide which has good assembly work efficiency and also has high mechanical strength of the chain contact surface and small sliding resistance, and which, even when being brought into contact with a chain running at high speed, is difficult to wear and generates low noise and low vibration, and is also to provide a chain tensioner device using the chain guide. A roller 12, which is brought into contact with a chain 1, comprises a support shaft 13 supported by an opposing guide base 9 provided along the running direction of the chain 1, and roller bearings each of which has a steel outer ring 12a that is provided on the outer peripheral surface of the support shaft 13 so as to be brought into contact with the chain 1. The roller 12 is also configured so as to be assembled by respectively inserting opposite ends of the support shaft 13 into support recesses 14 respectively provided on mutually facing wall surfaces of the guide base 9. The roller 12, which is brought into contact with the chain 1, has a vibration damping material 17 accommodated between the support shaft 13 supported by the mutually facing side plate members 9 provided along the running direction of the chain 1, and the support recess 14 of each of the side plate members 9 respectively supporting opposite ends of the support shaft 13, and thereby vibration of the support shaft 13 is made difficult to be transmitted to the side plate member 9.

No. of Pages : 43 No. of Claims : 22

(12) PATENT APPLICATION PUBLICATION
(19) INDIA
(22) Date of filing of Application :20/09/2013
(21) Application No.8239/DELNP/2013 A
(43) Publication Date : 19/12/2014

(54) Title of the invention : POLYHEDRAL OLIGOMERIC SILSESQUIOXANE ORGANIC/POLYMERIC DYADS AND ITS APPLICATION FOR ORGANIC PHOTOVOLTAIC CELLS

(51) International classification :H01L31/00
(31) Priority Document No :61/454715
(32) Priority Date :21/03/2011
(33) Name of priority country :U.S.A.
(86) International Application No :PCT/US2012/029903
Filing Date :21/03/2012
(87) International Publication No :WO 2012/129275
(61) Patent of Addition to Application Number :NA
Filing Date :NA
(62) Divisional to Application Number :NA
Filing Date :NA

(71)**Name of Applicant :**
1)THE UNIVERSITY OF AKRON
Address of Applicant :302 Buchtel Common Akron Ohio 44325 U.S.A.
(72)**Name of Inventor :**
1)CHENG Stephen Z.D.
2)ZHANG Wenbin
3)GONG Xiong

(57) Abstract :
A bulk heterojuction for a photovoltaic cell includes a polyhedral oligomeric silsesquioxane (POSS) functionalized electron acceptor or electron donor or both. The electron donor may be selected from conjugated polymers and the electron donor may be selected from fullerenes and fullerene derivatives.

No. of Pages : 22 No. of Claims : 12

CONTINUED TO PART-3

CONTINUED FROM PART-2

(12) PATENT APPLICATION PUBLICATION
(21) Application No.10054/CHENP/2013 A
(19) INDIA
(22) Date of filing of Application :16/12/2013
(43) Publication Date : 19/12/2014

(54) Title of the invention : ENERGY CONSERVATION CONTROLLER AND ENERGY CONSERVATION CONTROL SYSTEM

(51) International classification :H04Q9/00,F24F11/02,H05B37/02
(31) Priority Document No :2011138075
(32) Priority Date :22/06/2011
(33) Name of priority country :Japan
(86) International Application No :PCT/JP2012/065300
Filing Date :15/06/2012
(87) International Publication No :WO 2012/176690
(61) Patent of Addition to Application Number :NA
Filing Date :NA
(62) Divisional to Application Number :NA
Filing Date :NA

(71)**Name of Applicant :**
1)PANASONIC CORPORATION
Address of Applicant :1006 Oaza Kadoma Kadoma shi Osaka 5718501 Japan
(72)**Name of Inventor :**
1)NAKAKITA Kenji
2)TAKEHARA Kiyotaka

(57) Abstract :
In the present invention a recording unit records contents of control in association with levels of energy conservation representing degrees of energy conservation. A control unit reads from the recording unit the contents of control corresponding to a level of energy conservation set by a setting unit and controls an apparatus to be controlled. A request acquisition unit acquires operation contents performed by a user within a predetermined time period before and after a reference time with the point in time at which the apparatus to be controlled was controlled in accordance with the contents of control as the reference time. A receptiveness evaluation unit evaluates as receptiveness the degree of receptivity of the user to automatic energy conservation control by the control unit at the reference time on the basis of the operation contents acquired by the request acquisition unit. If the receptiveness is higher than a first threshold a setting unit increases the level of energy conservation in a manner so that the energy consumed from the reference time by the apparatus to be controlled becomes lower.

No. of Pages : 45 No. of Claims : 8

(12) PATENT APPLICATION PUBLICATION
(19) INDIA
(22) Date of filing of Application :16/12/2013
(21) Application No.10055/CHENP/2013 A
(43) Publication Date : 19/12/2014

(54) Title of the invention : MEDIUM HANDLING APPARATUS

(51) International classification :G07D9/00
(31) Priority Document No :2011199627
(32) Priority Date :13/09/2011
(33) Name of priority country :Japan
(86) International Application No :PCT/JP2012/064091
Filing Date :31/05/2012
(87) International Publication No :WO 2013/038758
(61) Patent of Addition to Application Number :NA
Filing Date :NA
(62) Divisional to Application Number :NA
Filing Date :NA

(71)**Name of Applicant :**
1)OKI ELECTRIC INDUSTRY CO. LTD.
Address of Applicant :1 7 12 Toranomon Minato ku Tokyo 1058460 Japan
(72)**Name of Inventor :**
1)TOGIYA Hajime

(57) Abstract :
A tape for carrying paper money and that is to be wound around a drum is pressed against the drum by a winding roller and is further pressed against the drum by a guide roller formed to the down stream side of the winding roller with respect to the direction the tape is wounded around the drum. In such a way paper money not easy to bend along the outer circumference face of the drum such as creased or wrinkled paper money can be bent along the outer circumference face of the drum and paper money wound around the drum is prevented from moving or rotating.

No. of Pages : 56 No. of Claims : 18

(12) PATENT APPLICATION PUBLICATION
(19) INDIA
(22) Date of filing of Application :16/12/2013
(21) Application No.10056/CHENP/2013 A
(43) Publication Date : 19/12/2014

(54) Title of the invention : POWER SUPPLY SYSTEM

(51) International classification :H02J3/38,H01M10/42,H01M10/44
(31) Priority Document No :2011122467
(32) Priority Date :31/05/2011
(33) Name of priority country :Japan
(86) International Application No :PCT/JP2012/062617
Filing Date :17/05/2012
(87) International Publication No :WO 2012/165154
(61) Patent of Addition to Application Number :NA
Filing Date :NA
(62) Divisional to Application Number :NA
Filing Date :NA

(71)**Name of Applicant :**
1)PANASONIC CORPORATION
Address of Applicant :1006 Oaza Kadoma Kadoma shi Osaka 5718501 Japan
(72)**Name of Inventor :**
1)TAMURA Hideki
2)INAKAGATA Satoru

(57) Abstract :
A power conditioner (12) is equipped with an interconnection output unit (12e) for supplying AC power during grid connection operation and a stand alone socket (12f) for supplying AC power during stand alone operation. A charging and discharging unit (14) is equipped with a stand alone socket (14e) for supplying AC power to devices (K2) during the stand alone operation. An abnormality detection unit (14h) opens a parallel off switch (14c) to cut off the power supply from the stand alone socket (14e) when detecting an abnormality of an output electrical line of the stand alone socket (14e).

No. of Pages : 22 No. of Claims : 3

(12) PATENT APPLICATION PUBLICATION
(19) INDIA
(22) Date of filing of Application :17/12/2013
(21) Application No.10057/CHENP/2013 A
(43) Publication Date : 19/12/2014

(54) Title of the invention : INFORMATION PROCESSING DEVICE PROGRAM INFORMATION PROCESSING METHOD AND INFORMATION PROCESSING SYSTEM

(51) International classification :G06F13/00,G06Q10/10
(31) Priority Document No :2011140314
(32) Priority Date :24/06/2011
(33) Name of priority country :Japan
(86) International Application No :PCT/JP2012/003824
Filing Date :12/06/2012
(87) International Publication No :WO 2012/176398
(61) Patent of Addition to Application Number :NA
Filing Date :NA
(62) Divisional to Application Number :NA
Filing Date :NA

(71)**Name of Applicant :**
1)SONY CORPORATION
Address of Applicant :1 7 1 Konan Minato ku Tokyo 1080075 Japan
(72)**Name of Inventor :**
1)YAMADA Kazuko

(57) Abstract :
Consistent with embodiments of this disclosure an information processing apparatus is provided. The information processing apparatus comprises an input terminal configured to receive a plurality of Universal Plug and Play (UPnP) descriptions from a plurality of external devices. The UPnP descriptions comprise grouping information indicating one or more groups to which the external devices belong. The information processing apparatus further comprises a processing unit configured to process the UPnP descriptions and assign the external devices to the one or more groups based on the grouping information.

No. of Pages : 62 No. of Claims : 20

(12) PATENT APPLICATION PUBLICATION
(19) INDIA
(22) Date of filing of Application :30/11/2012
(21) Application No.10059/CHENP/2012 A
(43) Publication Date : 19/12/2014

(54) Title of the invention : GLASS SUBSTRATES FOR HIGH TEMPERATURE APPLICATIONS

(51) International classification :C03C3/087,C03C4/00
(31) Priority Document No :61/346,704
(32) Priority Date :20/05/2010
(33) Name of priority country :U.S.A.
(86) International Application No :PCT/US2011/037448
Filing Date :20/05/2011
(87) International Publication No :WO/2011/146895
(61) Patent of Addition to Application Number :NA
Filing Date :NA
(62) Divisional to Application Number :NA
Filing Date :NA

(71)**Name of Applicant :**
1)SAINT-GOBAIN GLASS FRANCE
Address of Applicant :18 avenue dAlsace F-92400 Courbevoie France
(72)**Name of Inventor :**
1)HICKMAN Brad
2)WATSON Patrick D.

(57) Abstract :
A glass substrate may be processed at high temperatures without substantially losing its thermal-strengthening characteristics or deforming. In some examples the glass substrate exhibits an increased annealing point and/or softening point as compared to standard glass substrates. In some examples the glass substrate includes a relatively high amount of CaO and/or MgO and/or a relatively low amount of Na2O as compared to traditional soda-lime- silica-based glass. Depending on the composition the glass substrate may be useful for example to fabricate a glass-based solar cell that mates two substantially flat glass substrates together.

No. of Pages : 46 No. of Claims : 38

(12) PATENT APPLICATION PUBLICATION
(19) INDIA
(22) Date of filing of Application :17/12/2013
(21) Application No.10060/CHENP/2013 A
(43) Publication Date : 19/12/2014

(54) Title of the invention : CODING SYNTAX ELEMENTS USING VLC CODEWORDS

(51) International classification :H04N7/30
(31) Priority Document No :61/506542
(32) Priority Date :11/07/2011
(33) Name of priority country :U.S.A.
(86) International Application No :PCT/US2012/046218
Filing Date :11/07/2012
(87) International Publication No :WO 2013/009845
(61) Patent of Addition to Application Number :NA
Filing Date :NA
(62) Divisional to Application Number :NA
Filing Date :NA

(71)**Name of Applicant :**
1)QUALCOMM INCORPORATED
Address of Applicant :ATTN: International IP Administration 5775 Morehouse Drive San Diego CA 92121 1714 U.S.A.
(72)**Name of Inventor :**
1)KARCZEWICZ Marta
2)GUO Liwei
3)WANG Xianglin

(57) Abstract :
This disclosure describes techniques for coding transform coefficients for a block of video data. According to these techniques a video coder (a video encoder or video decoder) stores a first VLC table array selection table in memory and an indication of at least one difference between the first VLC table array selection table and a second VLC table array selection table. The video coder reconstructs at least one entry of the second VLC table array selection table based on the first VLC table array selection table using the stored indication of the difference between the first VLC table array selection table and a second VLC table array selection table. The video coder uses the reconstructed at least one entry of the second VLC table array selection table to code at least one block of video data.

No. of Pages : 32 No. of Claims : 19

(12) PATENT APPLICATION PUBLICATION
(19) INDIA
(22) Date of filing of Application :30/11/2012
(21) Application No.10061/CHENP/2012 A
(43) Publication Date : 19/12/2014

(54) Title of the invention : INTER -CELL OR INTER - SECTOR INTERFERENCE CALCULATION TAKING ACCOUNT OF IDLE SLOTS

(51) International classification :H04L25/03,H04B1/707
(31) Priority Document No :12/776,493
(32) Priority Date :10/05/2010
(33) Name of priority country :U.S.A.
(86) International Application No :PCT/US2010/034329
Filing Date :11/05/2010
(87) International Publication No :WO 2011/142743
(61) Patent of Addition to Application Number :NA
Filing Date :NA
(62) Divisional to Application Number :NA
Filing Date :NA

(71)**Name of Applicant :**
1)QUALCOMM INCORPORATED
Address of Applicant :ATTN: International IP Administration 5775 Morehouse Drive San Diego California 92121-1714 U.S.A.
(72)**Name of Inventor :**
1)JING SUN
2)QIANG WU
3)RASHID AHMED AKBAR ATTAR
4)MEHMET I. GURELLI

(57) Abstract :
A method for interference cancellation in a device that receives transmissions from multiple sources is disclosed. The method includes receiving multiple slots, each including a pilot segment and a traffic segment. A first one of the slots includes information indicating an activity level of a traffic segment of the first one of the slots. The method also includes calculating a value associated with interference among the plurality of slots, utilizing the information indicating the activity level to account for an amount of interference attributable to the first one of the slots. Furthermore, channel conditions are estimated for a second one of the slots using the value associated with the amount of interference. The method also includes processing the second one of the slots according to the estimated channel conditions.

No. of Pages : 23 No. of Claims : 24

(12) PATENT APPLICATION PUBLICATION
(19) INDIA
(22) Date of filing of Application :17/12/2013
(21) Application No.10064/CHENP/2013 A
(43) Publication Date : 19/12/2014

(54) Title of the invention : REPRESENTATION AND DISPLAY OF THE COIL TEMPERATURE OF AN ELECTRICAL POWER TRANSFORMER

(51) International classification :G01K7/42,H01F27/40,H02H6/00
(31) Priority Document No :10 2011 107 375.6
(32) Priority Date :14/07/2011
(33) Name of priority country :Germany
(86) International Application No :PCT/EP2012/059789
Filing Date :25/05/2012
(87) International Publication No :WO 2013/007435
(61) Patent of Addition to Application Number :NA
Filing Date :NA
(62) Divisional to Application Number :NA
Filing Date :NA

(71)**Name of Applicant :**
1)MASCHINENFABRIK REINHAUSEN GMBH
Address of Applicant :Falkensteinstrae 8 93059 Regensburg Germany
(72)**Name of Inventor :**
1)HOLLUNDER Sebastian
2)KUBICZEK Martin

(57) Abstract :
The invention relates to a device for representing and displaying the coil temperature of an electrical power transformer and to an electrical circuit suitable therefor. The invention is based on the general concept of using the CT signal current not only for supplying the heating resistor of a sensor for example but also for decoupling energy from the CT signal current by transformation via an electronic circuit according to the invention in order to supply energy to the connected measurement devices so that a separate energy source can thus be ultimately omitted. According to the invention the primary coil of a transformer hereinafter referred to as removal transformer is inserted into the CT signal current and the voltage sloping via the primary coil and secondary coil of the removal transformer is limited in that a triac triggered by two diodes connected in parallel short circuits as soon as the corresponding half cycle reaches a threshold value and does not open again until the next current zero crossing of the CT signal current.

No. of Pages : 12 No. of Claims : 2

(12) PATENT APPLICATION PUBLICATION
(19) INDIA
(22) Date of filing of Application :17/12/2013
(21) Application No.10065/CHENP/2013 A
(43) Publication Date : 19/12/2014

(54) Title of the invention : CROSS POLARIZATION INTERFERENCE CANCELLATION DEVICE AND CROSS POLARIZATION INTERFERENCE CANCELLATION METHOD

(51) International classification :H04B1/10,H04J11/00
(31) Priority Document No :2011127140
(32) Priority Date :07/06/2011
(33) Name of priority country :Japan
(86) International Application No :PCT/JP2012/064464
Filing Date :05/06/2012
(87) International Publication No :WO 2012/169492
(61) Patent of Addition to Application Number :NA
Filing Date :NA
(62) Divisional to Application Number :NA
Filing Date :NA

(71)**Name of Applicant :**
1)NEC Corporation
Address of Applicant :7 1 Shiba 5 chome Minato ku Tokyo 1088001 Japan
(72)**Name of Inventor :**
1)ARAI Jungo

(57) Abstract :
A cross polarization interference cancellation device is used in a co channel based wireless communication device wherein a wireless communication is performed using a self polarization and a different polarization which have the same frequency with phases orthogonal to each other. The cross polarization interference cancellation device includes a first filter for removing a component outside a prescribed frequency range from a self polarization side signal a second filter for removing a component outside a prescribed frequency range from a different polarization side signal a cross polarization interference cancellation unit connected to the second filter and generating a cross polarization interference cancellation signal for removing the different polarization side signal that is superimposed on the self polarization side signal and becomes a cross polarization interference component and a computation unit for compensating the self polarization side signal by subtracting the cross polarization interference cancellation signal from the self polarization side signal passing through the first filter. Here the frequency range of the first filter is to be included in the frequency range of the second filter. Further an interference cancellation gain adjustment unit may be arranged at the front or the rear of the cross polarization interference cancellation unit.

No. of Pages : 47 No. of Claims : 7

(12) PATENT APPLICATION PUBLICATION
(19) INDIA
(22) Date of filing of Application :04/12/2012

(21) Application No.10150/CHENP/2012 A
(43) Publication Date : 19/12/2014

(54) Title of the invention : ENERGY HARVESTING

(51) International classification :F03G7/08,H02K7/18
(31) Priority Document No :1007497.9
(32) Priority Date :05/05/2010
(33) Name of priority country :U.K.
(86) International Application No :PCT/GB2011/000686
Filing Date :04/05/2011
(87) International Publication No :WO/2011/138585
(61) Patent of Addition to Application Number :NA
Filing Date :NA
(62) Divisional to Application Number :NA
Filing Date :NA

(71)**Name of Applicant :**
1)PAVEGEN SYSTEMS LIMITED
Address of Applicant :31 St. George™s Place Canterbury Kent CT1 1XD United Kingdom
(72)**Name of Inventor :**
1)KEMBALL-COOK Laurence
2)TUCKER Philip

(57) Abstract :
The present application describes techniques for the harvesting of kinetic energy from the movement of people and/or vehicles. A motion converter is discussed which converts linear progression caused by traffic-related impulse forces to be converted to rotational motion for driving the rotor of an electricity generator. An assembly for harvesting energy including the motion converter and a floor unit are also described.

No. of Pages : 23 No. of Claims : 19

(12) PATENT APPLICATION PUBLICATION
(19) INDIA
(22) Date of filing of Application :04/12/2012
(21) Application No.10151/CHENP/2012 A
(43) Publication Date : 19/12/2014

(54) Title of the invention : APPLICATORS FOR MICRONEEDLES

(51) International classification :A61M37/00,A61M5/158
(31) Priority Document No :61/331,175
(32) Priority Date :04/05/2010
(33) Name of priority country :U.S.A.
(86) International Application No :PCT/US2011/035221
Filing Date :04/05/2011
(87) International Publication No : NA
(61) Patent of Addition to Application Number :NA
Filing Date :NA
(62) Divisional to Application Number :NA
Filing Date :NA

(71)**Name of Applicant :**
1)CORIUM INTERNATIONAL INC.
Address of Applicant :235 Consititution Drive Menlo Park CA 94025 United States of America
(72)**Name of Inventor :**
1)TRAUTMAN Joseph C.
2)BOURNE Douglas Joseph Scott
3)LE Anthony
4)WORSHAM Robert Wade
5)SINGH Parminder

(57) Abstract :
An applicator for a microprojection array is described. In one embodiment the applicator comprises an energy-storing element. Appiication of feree causes the compressed energy-storing element to extend or transition from first and second configurations releasing stored energy to deploy a holding member in the appiication which is configured to hold an array of microprojections. !n another embodiment the applicator comprises an energy storing element with two stable configurations a first stable configuration and second stable configuration. Application of force causes the energy-storing element to transition from the higher energy first stable configuration to the lower energy second stable configuration releasing the difference in energies of the two states to deploy a holding member in the appiication which is configured to hold an array of microprojections. (Fig. 1B)

No. of Pages : 56 No. of Claims : 25

(12) PATENT APPLICATION PUBLICATION
(19) INDIA
(22) Date of filing of Application :19/12/2013
(21) Application No.10151/CHENP/2013 A
(43) Publication Date : 19/12/2014

(54) Title of the invention : VIBRATING CENTRIFUGE

(51) International classification :B04B3/06
(31) Priority Document No :2011902462
(32) Priority Date :23/06/2011
(33) Name of priority country :Australia
(86) International Application No :PCT/AU2012/000705
Filing Date :19/06/2012
(87) International Publication No :WO 2012/174588
(61) Patent of Addition to Application Number :NA
Filing Date :NA
(62) Divisional to Application Number :NA
Filing Date :NA

(71)**Name of Applicant :**
1)LUDOWICI AUSTRALIA PTY LTD
Address of Applicant :67 Randle Road Pinkenba Queensland 4008 Australia
(72)**Name of Inventor :**
1)ANGUS Robert
2)ELLIOTT Anthony

(57) Abstract :
A vibrating centrifuge having a separation screen that is rotated and vibrated to separate a material typically slurry (e.g. coal slurry). The separation screen is vibrated by a vibrator such as an unbalanced motor. One or more constraint members preferably leaf springs are provided that restrict vibration generated by the vibrator to a single degree of freedom that is parallel to the drive shaft axis. The vibrating centrifuge has a biasing member in the form of a compression spring to tune the vibration frequency. Optionally a tuning mass can also be used to tune the vibration frequency.

No. of Pages : 16 No. of Claims : 18

(12) PATENT APPLICATION PUBLICATION
(19) INDIA
(22) Date of filing of Application :19/12/2013
(21) Application No.10152/CHENP/2013 A
(43) Publication Date : 19/12/2014

(54) Title of the invention : ASSEMBLING OF DRAWER

(51) International classification :A47B88/00
(31) Priority Document No :11167510.4
(32) Priority Date :25/05/2011
(33) Name of priority country :EPO
(86) International Application No :PCT/EP2012/059684
Filing Date :24/05/2012
(87) International Publication No :WO 2012/160129
(61) Patent of Addition to Application Number :NA
Filing Date :NA
(62) Divisional to Application Number :NA
Filing Date :NA

(71)**Name of Applicant :**
1)SAUER Steen
Address of Applicant :c/o Pepesa Holding A/S Frederiksberg All 19B st.tv. DK 1820 Frederiksberg C Denmark
(72)**Name of Inventor :**
1)SAUER Steen

(57) Abstract :
A furniture assembly which comprises a first furniture element which defines a first surface and a first groove in the first surface. The first groove defines a first side surface and an opposite second side surface. The furniture assembly further comprises a second furniture element which comprises a first tongue for being received in the first groove. The first tongue defines a first tongue surface and an opposite second tongue surface. The second tongue surface is adapted for facial cooperation with the second side surface of the first groove. The first side surface and the first tongue surface defines a first elongated compartment in the facial cooperation between the second tongue surface and the second side surface. The furniture assembly further comprises a first elongated furniture locking element for insertion into the first elongated compartment for engaging the first side surface and the first tongue surface and for forcing the second tongue surface toward the second side surface.

No. of Pages : 29 No. of Claims : 15

(12) PATENT APPLICATION PUBLICATION
(19) INDIA
(22) Date of filing of Application :19/12/2013
(21) Application No.10153/CHENP/2013 A
(43) Publication Date : 19/12/2014

(54) Title of the invention : HANDHELD DEVICE OPERATION MODE IDENTIFICATION METHOD AND HANDHELD DEVICE

(51) International classification :G06F3/048
(31) Priority Document No :201110240019.X
(32) Priority Date :19/08/2011
(33) Name of priority country :China
(86) International Application No :PCT/CN2012/080331
Filing Date :20/08/2012
(87) International Publication No :WO 2013/026377
(61) Patent of Addition to Application Number :NA
Filing Date :NA
(62) Divisional to Application Number :NA
Filing Date :NA

(71)**Name of Applicant :**
1)HUAWEI DEVICE CO. LTD.
Address of Applicant :Building B2 Huawei Industrial Base Bantian Longgang Shenzhen Guangdong 518129 China
(72)**Name of Inventor :**
1)LIU Zhijie

(57) Abstract :
Provided are a handheld device operation mode identification method and a handheld device which relate to the technical field of electronics to solve the problem of inconvenient operation due to the difference between left and right hand usage habits. The method includes: obtaining left and right hand operation information about a user; if the operation information shows that the user operates with the right hand then displaying a predefined first operation interface conforming to a right hand operation habit on the display screen of a handheld device; and if the operation information shows that the user operates with the left hand then displaying a predefined second operation interface conforming to a left hand operation habit on the display screen of a handheld device. The embodiments of the present invention are used to operate handheld devices.

No. of Pages : 15 No. of Claims : 9

(12) PATENT APPLICATION PUBLICATION
(19) INDIA
(22) Date of filing of Application :20/12/2013
(21) Application No.10162/CHENP/2013 A
(43) Publication Date : 19/12/2014

(54) Title of the invention : POWER FACTOR CORRECTION CIRCUIT AND POWER CIRCUIT

(51) International classification :H02M1/42,H02M5/45,H02J9/04
(31) Priority Document No :201210447344.8
(32) Priority Date :09/11/2012
(33) Name of priority country :China
(86) International Application No :PCT/CN2013/073869
Filing Date :08/04/2013
(87) International Publication No:WO 2014/071720
(61) Patent of Addition to Application Number :NA
Filing Date :NA
(62) Divisional to Application Number :NA
Filing Date :NA

(71)**Name of Applicant :**
1)HUAWEI TECHNOLOGIES CO. LTD.
Address of Applicant :Huawei Administration Building Bantian Longgang District Shenzhen Guangdong 518129 China
(72)**Name of Inventor :**
1)CHENG Yang
2)WANG Weifeng
3)YAO Xiaofeng

(57) Abstract :
The embodiments of the present invention provide a power factor correction circuit and a power circuit. The power factor correction circuit comprises a main correction circuit and a switch module and the main correction circuit comprises a first correction circuit a second correction circuit a third correction circuit and a fourth correction circuit. The first correction circuit and the second correction circuit are used for performing power factor correction on a forward going alternating current voltage and the third correction circuit and the fourth correction circuit are used for performing power factor correction on a negative going alternating current voltage. The switch module comprises a first switch unit and a second switch unit. The first switch unit is in parallel connection between input ends of the first correction circuit and the third correction circuit and the second switch unit is in parallel connection between input ends of the second correction circuit and the fourth correction circuit and both the first switch unit and the second switch unit comprise two controlled switches in series connection. According to the power factor correction circuit in the embodiments of the present invention ON or OFF between correction circuits and input voltages can be controlled by using the switch module thereby improving the utilization rate of the correction circuits and reducing the cost of the power factor correction circuit.

No. of Pages : 37 No. of Claims : 15

(12) PATENT APPLICATION PUBLICATION
(19) INDIA
(22) Date of filing of Application :04/12/2012

(21) Application No.10175/CHENP/2012 A
(43) Publication Date : 19/12/2014

(54) Title of the invention : TEETHER

(51) International classification :A61J17/00
(31) Priority Document No :10165031.5
(32) Priority Date :07/06/2010
(33) Name of priority country :EPO
(86) International Application No :PCT/IB2011/052389
Filing Date :31/05/2011
(87) International Publication No :WO 2011/154870
(61) Patent of Addition to Application Number :NA
Filing Date :NA
(62) Divisional to Application Number :NA
Filing Date :NA

(71)**Name of Applicant :**
1)KONINKLIJKE PHILIPS ELECTRONICS N.V.
Address of Applicant :GROENEWOUDSEWEG 1 EINDHOVEN 5621 BA NETHERLANDS
(72)**Name of Inventor :**
1)VAN ENGEN Marcel H.
2)SMITH Peter J.

(57) Abstract :
A teething device comprising a shield connected to a gum soothing portion formed from a frame is disclosed. The frame is configured to locate underneath a lip and against a gum of an infant when in use. Furthermore the frame is shaped so as to conform to an infants gumso as to produce a massaging effect on said gum.

No. of Pages : 8 No. of Claims : 9

(12) PATENT APPLICATION PUBLICATION
(19) INDIA
(22) Date of filing of Application :04/12/2012
(21) Application No.10177/CHENP/2012 A
(43) Publication Date : 19/12/2014

(54) Title of the invention : FAILSAFE LIGHTING SYSTEM

(51) International classification :H05B33/08
(31) Priority Document No :10165186.7
(32) Priority Date :08/06/2010
(33) Name of priority country :EPO
(86) International Application No :PCT/IB2011/052421
Filing Date :01/06/2011
(87) International Publication No : NA
(61) Patent of Addition to Application Number :NA
Filing Date :NA
(62) Divisional to Application Number :NA
Filing Date :NA

(71)**Name of Applicant :**
1)KONINKLIJKE PHILIPS ELECTRONICS N.V.
Address of Applicant :GROENEWOUDSEWEG 1 EINDHOVEN 5621 BA NETHERLANDS
(72)**Name of Inventor :**
1)BUERRIG Thomas Georg-Christian Theodor
2)BOEBEL Artur Lorenz

(57) Abstract :
A failsafe lighting system (1) comprises a lamp (L) and monitoring circuitry for monitoring the correct functioning of the lamp (L) the monitoring circuitry comprising an optical sensor (26) positioned for receiving light generated by the lamp (L). The monitoring circuitry comprises a self-oscillating loop (25) which includes the lamp (L) and the optical sensor (26) wherein the optical path between the lamp (L) and the optical sensor (26) is an essential portion of the loop (25) such that the loop (25) can only oscillate if the optical sensor (26) receives sufficient light from the lamp (L).

No. of Pages : 16 No. of Claims : 8

(12) PATENT APPLICATION PUBLICATION
(19) INDIA
(22) Date of filing of Application :04/12/2012
(21) Application No.10178/CHENP/2012 A
(43) Publication Date : 19/12/2014

(54) Title of the invention : ADJUSTING A BUILDING SERVICE SYSTEM

(51) International classification :H05B37/02
(31) Priority Document No :10165527.2
(32) Priority Date :10/06/2010
(33) Name of priority country :EPO
(86) International Application No :PCT/IB2011/052497
Filing Date :08/06/2011
(87) International Publication No : NA
(61) Patent of Addition to Application Number :NA
Filing Date :NA
(62) Divisional to Application Number :NA
Filing Date :NA

(71)**Name of Applicant :**
1)KONINKLIJKE PHILIPS ELECTRONICS N.V.
Address of Applicant :GROENEWOUDSEWEG 1 EINDHOVEN 5621 BA NETHERLANDS
(72)**Name of Inventor :**
1)FERI Lorenzo
2)PANDHARIPANDE Ashish Vijay
3)WANG Ying
4)SCHENK Tim Corneel Wilhelmus

(57) Abstract :
The invention relates to adjusting at least one of installed building service sensors (10) of a building service system. A sensor coverage area of at least one sensor (10) is adjusted based on information on a position of the installed sensor (10) relative to at least one other sensor (10). For example to determine the position of the sensor (10) relative to said at least one other sensor (10) each sensor (10) establishes a wireless communication between said sensor (10) and at least one other sensor (10) via a wireless communication means (34) of the sensor (10). For example information on the positions of the installed sensors (10) is used to assign to each sensor (10) at least one of installed building service supply devices (12) of the system.

No. of Pages : 24 No. of Claims : 15

(12) PATENT APPLICATION PUBLICATION
(19) INDIA
(22) Date of filing of Application :29/11/2012
(21) Application No.10050/CHENP/2012 A
(43) Publication Date : 19/12/2014

(54) Title of the invention : FAST REIGNITON OF A HIGH INTENSITY DISCHARGE LAMP

(51) International classification :H05B37/03,H05B41/38
(31) Priority Document No :12/790,830
(32) Priority Date :30/05/2010
(33) Name of priority country :U.S.A.
(86) International Application No :PCT/US2011/037620
Filing Date :23/05/2011
(87) International Publication No :WO 2011/153020
(61) Patent of Addition to Application Number :NA
Filing Date :NA
(62) Divisional to Application Number :NA
Filing Date :NA

(71)**Name of Applicant :**
1)LUMETRIC LIGHTING INC.
Address of Applicant :41350 Christy Street Suite B Fremont California 94538 UNITED STATES OF AMERICA
(72)**Name of Inventor :**
1)DAVIS Gregory
2)SHLOUSH Moshe

(57) Abstract :
Embodiments of the present invention provide for the rapid reignition of a high intensity discharge lamp. In one embodiment of the invention an apparatus for a fast reignition of a high intensity discharge lamp is disclosed. The apparatus is comprised of a ballast operatively coupled to the lamp that is configured to receive power from a power supply. The apparatus is also comprised of a timer circuit that enters a timing phase and produces a quantum of timing information when the lamp ceases receiving power from the power supply. This timer circuit does not require external power during the timing phase. The apparatus is additionally comprised of a control circuit that receives the timing information and permits the ballast to reignite the lamp based on the information

No. of Pages : 37 No. of Claims : 20

(12) PATENT APPLICATION PUBLICATION
(19) INDIA
(22) Date of filing of Application :27/12/2013
(21) Application No.10310/CHENP/2013 A
(43) Publication Date : 19/12/2014

(54) Title of the invention : METHOD AND APPARATUS TO REDUCE IDLE LINK POWER IN A PLATFORM

(51) International classification :G06F1/32,G06F13/14
(31) Priority Document No :13/175574
(32) Priority Date :01/07/2011
(33) Name of priority country :U.S.A.
(86) International Application No :PCT/US2012/045206
Filing Date :02/07/2012
(87) International Publication No :WO 2013/006535
(61) Patent of Addition to Application Number :NA
Filing Date :NA
(62) Divisional to Application Number :NA
Filing Date :NA

(71)**Name of Applicant :**
1)INTEL CORPORATION
Address of Applicant :2200 Mission College Boulevard M/S: RNB 4 150 Santa Clara California 95052 U.S.A.
(72)**Name of Inventor :**
1)DIEFENBAUGH Paul S.
2)GOUGH Robert E.
3)BACHRACH Yuval
4)HUNSAKER Mikal C.
5)BEN TAL Rafi
6)PARDO Ilan
7)PRAT Gideon
8)HARRIMAN David J.

(57) Abstract :
A method and apparatus to reduce the idle link power in a platform. In one embodiment of the invention the host and its coupled endpoint(s) in the platform each has a low power idle link state that allows disabling of the high speed link circuitry in both the host and its coupled endpoint(s). This allows the platform to reduce its idle power as both the host and its coupled endpoint(s) are able to turn off their high speed link circuitry in one embodiment of the invention.

No. of Pages : 26 No. of Claims : 20

(12) PATENT APPLICATION PUBLICATION
(19) INDIA
(22) Date of filing of Application :10/12/2012
(21) Application No.10314/CHENP/2012 A
(43) Publication Date : 19/12/2014

(54) Title of the invention : QOS-BASED POWER CONTROL IN AGGREGATED CARRIER COMMUNICATION SYSTEMS

(51) International classification :H04W52/32
(31) Priority Document No :61/346,383
(32) Priority Date :19/05/2010
(33) Name of priority country :U.S.A.
(86) International Application No :PCT/US2011/037227
Filing Date :19/05/2011
(87) International Publication No :WO/2011/146762
(61) Patent of Addition to Application Number :NA
Filing Date :NA
(62) Divisional to Application Number :NA
Filing Date :NA

(71)**Name of Applicant :**
1)QUALCOMM INCORPORATED
Address of Applicant :ATTN: International IP Administration 5775 Morehouse Drive San Diego California 92121-1714 U.S.A.
(72)**Name of Inventor :**
1)WANSHI CHEN
2)JUAN MONTOJO
3)PETER GAAL
4)XILIANG LUO
5)ALEKSANDAR DAMNJANOVIC

(57) Abstract :
A user equipment (UE) is configured for carrier aggregation in a wireless communication system. The UE selects control information to be transmitted in an uplink control channel format in a component carrier of two or more component carriers, where the control information includes information types associated with different information reliability requirements. The UE generates an open-loop power control parameter and/or a closed-loop power control parameter based on the information types. The UE transmits the control information in the uplink control channel format at a power level determined by the open-loop power control parameter and/or the closed-loop power control parameter.

No. of Pages : 47 No. of Claims : 24

(12) PATENT APPLICATION PUBLICATION
(19) INDIA
(22) Date of filing of Application :10/12/2012
(21) Application No.10315/CHENP/2012 A
(43) Publication Date : 19/12/2014

(54) Title of the invention : PROCESS FOR IMPROVING PACKAGE WARPAGE AND CONNECTION RELIABILITY THROUGH USE OF A BACKSIDE MOLD CONFIGURATION (BSMC)

(51) International classification :H01L21/56,H01L23/00,H01L23/31
(31) Priority Document No :61/346,725
(32) Priority Date :20/05/2010
(33) Name of priority country :U.S.A.
(86) International Application No :PCT/US2011/037211
Filing Date :19/05/2011
(87) International Publication No :WO/2011/146751
(61) Patent of Addition to Application Number :NA
Filing Date :NA
(62) Divisional to Application Number :NA
Filing Date :NA

(71)**Name of Applicant :**
1)QUALCOMM INCORPORATED
Address of Applicant :ATTN: International IP Administration 5775 Morehouse Drive San Diego California 92121 U.S.A.
(72)**Name of Inventor :**
1)OMAR J. BCHIR
2)MILIND P. SHAH
3)SASHIDHAR MOVVA

(57) Abstract :
A backside mold configuration (BSMC) process for manufacturing packaged integrated circuits includes applying a mold compound to a side of a packaging substrate opposite an attached die. The mold compound is deposited on a dielectric (such as photo resist). The mold compound and dielectric are patterned after coupling a die to the packaging substrate to expose a contact pad of the packaging substrate. After patterning the mold compound and dielectric, a packaging connection is coupled to contact pads through the mold compound and dielectric. The mold compound surrounding the packaging connection reduces warpage of the packaging substrate during processing. Additionally, patterning the dielectric after attaching the die improves reliability of the packaging connection.

No. of Pages : 31 No. of Claims : 24

(12) PATENT APPLICATION PUBLICATION
(19) INDIA
(22) Date of filing of Application :10/12/2012
(21) Application No.10317/CHENP/2012 A
(43) Publication Date : 19/12/2014

(54) Title of the invention : METHOD AND APPARATUSES FOR PERFORMING NETWORK FUNCTIONS IN A PASSIVE OPTICAL NETWORK

(51) International classification :H04L12/24,H04Q11/00
(31) Priority Document No :10305537.2
(32) Priority Date :20/05/2010
(33) Name of priority country :EPO
(86) International Application No :PCT/EP2011/055631
Filing Date :11/04/2011
(87) International Publication No :WO/2011/144388
(61) Patent of Addition to Application Number :NA
Filing Date :NA
(62) Divisional to Application Number :NA
Filing Date :NA

(71)**Name of Applicant :**
1)ALCATEL LUCENT
Address of Applicant :3 avenue Octave Grard F-75007 Paris France
(72)**Name of Inventor :**
1)HARALD SCHMUCK
2)MICHAEL STRAUB
3)THOMAS PFEIFFER
4)J–RG HEHMANN

(57) Abstract :
The invention relates to a method for performing network functions for a subscriber-sided (CPE) network access unit (ONT) in a telecommunications access network with a central unit (CO, OLT), a distribution network (AN), and a multiple of network-sided network termination units (DPD) with subscriber- sided network access units (ONT) connected or connectable thereto, in which network a bidirectional communication path (1) is present between the central unit (CO) and that network- sided network termination unit (DPD), to which the subscriber-sided network access unit (ONT) under consideration is connected, in which for performing network functions a further bidirectional communication path (2) between the subscriber-sided network access unit (ONT) under consideration and the corresponding network-sided network termination unit (DPD) is used in connection with the bidirectional communication path (1) between the central unit (CO, OLT) and that network-sided network termination unit (DPD), as well as to a telecommunications access network (Figure 1), a central unit (CO, OLT), a network-sided network termination unit (DPD), and a subscriber-sided network access unit (ONT).

No. of Pages : 17 No. of Claims : 5

(12) PATENT APPLICATION PUBLICATION
(19) INDIA
(22) Date of filing of Application :27/12/2013

(21) Application No.10317/CHENP/2013 A
(43) Publication Date : 19/12/2014

(54) Title of the invention : COMPOSITION COMPRISING INHIBITORS OF IRS 1 AND OF VEGF

(51) International classification :C12N15/113,A61K31/711,A61K39/395
(31) Priority Document No :11172238.5
(32) Priority Date :30/06/2011
(33) Name of priority country :EPO
(86) International Application No :PCT/EP2012/062773
Filing Date :29/06/2012
(87) International Publication No :WO 2013/001080
(61) Patent of Addition to Application Number :NA
Filing Date :NA
(62) Divisional to Application Number :NA
Filing Date :NA

(71)**Name of Applicant :**
1)GENE SIGNAL INTERNATIONAL SA
Address of Applicant :Parc Scientifique EPFL PSE A CH 1015 Lausanne Switzerland
(72)**Name of Inventor :**
1)THORIN ‰ric
2)AL MAHMOOD Salman
3)COLIN Sylvie
4)FERRY Antoine
5)VIAUD ‰ric

(57) Abstract :
The present invention relates to a composition or kit of parts comprising an inhibitor of IRS 1 and an inhibitor of the VEGF pathway and to the use thereof for treating an angiogenic disease.

No. of Pages : 45 No. of Claims : 15

(12) PATENT APPLICATION PUBLICATION
(19) INDIA
(22) Date of filing of Application :28/11/2012
(21) Application No.10319/CHENP/2012 A
(43) Publication Date : 19/12/2014

(54) Title of the invention : AUTOMATIC HUMIDITY CONTROL IN A PRESSURE SUPPORT SYSTEM

(51) International classification :A61M16/16
(31) Priority Document No :61/351324
(32) Priority Date :04/06/2010
(33) Name of priority country :U.S.A.
(86) International Application No :PCT/IB2011/051841
Filing Date :27/04/2011
(87) International Publication No :WO 2011/151741
(61) Patent of Addition to Application Number :NA
Filing Date :NA
(62) Divisional to Application Number :NA
Filing Date :NA

(71)**Name of Applicant :**
1)KONINKLIJKE PHILIPS ELECTRONICS N.V.
Address of Applicant :GROENEWOUDSEWEG 1 EINDHOVEN 5621 BA NETHERLANDS
(72)**Name of Inventor :**
1)PUJOL John Raymond

(57) Abstract :
A method of automatically controlling the humidity of a gas stream of a pressure support system (50) during use of the system is provided. The method includes receiving a first humidification level and controlling operation of a humidifier (68) based on the first humidification level and at least one of: (i) one or more environmental parameters relating to environmental conditions around the pressure support system (ii) one or more gas stream parameters relating to a gas stream output by the pressure support system to a patient circuit (56 58) (iii) one or more respiratory demand parameters of a user of the pressure support system and (iv) one or more operating parameters of the pressure support system that effect a flow rate that is generated by a pressure generating system (52 60) of the pressure support system.

No. of Pages : 23 No. of Claims : 22

(12) PATENT APPLICATION PUBLICATION
(19) INDIA
(22) Date of filing of Application :28/11/2012
(21) Application No.10320/CHENP/2012 A
(43) Publication Date : 19/12/2014

(54) Title of the invention : AUTOMATIC CONTROL OF TEMPERATURE IN A PATIENT CIRCUIT

(51) International classification :A61M16/10
(31) Priority Document No :61/351326
(32) Priority Date :04/06/2010
(33) Name of priority country :U.S.A.
(86) International Application No :PCT/IB2011/051836
Filing Date :27/04/2011
(87) International Publication No :WO 2011/151739
(61) Patent of Addition to Application Number :NA
Filing Date :NA
(62) Divisional to Application Number :NA
Filing Date :NA

(71)**Name of Applicant :**
1)KONINKLIJKE PHILIPS ELECTRONICS N.V.
Address of Applicant :GROENEWOUDSEWEG 1 EINDHOVEN 5621 BA NETHERLANDS
(72)**Name of Inventor :**
1)PUJOL John Raymond

(57) Abstract :
A method of automatically controlling the temperature of a patient circuit (56 58) of a pressure support system (50) includes determining (directly measuring or estimating/deriving) one or more environmental parameters relating to environmental conditions around the pressure support system such as ambient temperature and/or ambient humidity determining a desired temperature based on at least the one or more environmental parameters and controlling the operation of a heating apparatus (70) operatively associated with the patient circuit based on the desired temperature. Also a pressure support system implementing the method.

No. of Pages : 26 No. of Claims : 36

(12) PATENT APPLICATION PUBLICATION
(19) INDIA
(22) Date of filing of Application :28/11/2012
(21) Application No.10321/CHENP/2012 A
(43) Publication Date : 19/12/2014

(54) Title of the invention : PHASE-TO-AMPLITUDE/SLOPE MAPPING

(51) International classification :A61B5/113,A61B6/00,G06F17/00
(31) Priority Document No :61/351310
(32) Priority Date :04/06/2010
(33) Name of priority country :U.S.A.
(86) International Application No :PCT/IB2011/051840
Filing Date :27/04/2011
(87) International Publication No :WO 2011/151740
(61) Patent of Addition to Application Number :NA
Filing Date :NA
(62) Divisional to Application Number :NA
Filing Date :NA

(71)**Name of Applicant :**
1)KONINKLIJKE PHILIPS ELECTRONICS N.V.
Address of Applicant :GROENEWOUDSEWEG 1 EINDHOVEN 5621 BA NETHERLANDS
(72)**Name of Inventor :**
1)COVITCH Adam Jacob
2)KLAHR Paul

(57) Abstract :
A method includes obtaining a signal that includes a plurality of cycles and generating a map that maps motion phases to the signal based on both an amplitude and a slope of the signal. A system includes a processor that identifies a set of motion signal timestamps for a plurality of motion cycles in a motion signal indicative of cyclic motion of a moving object based on a predetermined motion phase of interest and a phase-to-amplitude/slope mapping wherein the set of motion signal timestamps correspond to a common signal amplitude. A method include identifying a peak of a plurality of peaks in a motion cycle of a noisy cyclic signal having irregular periodicity

No. of Pages : 23 No. of Claims : 21

(12) PATENT APPLICATION PUBLICATION
(19) INDIA
(22) Date of filing of Application :28/11/2012
(21) Application No.10322/CHENP/2012 A
(43) Publication Date : 19/12/2014

(54) Title of the invention : CASCADED POWER-OVER-ETHERNET SYSTEM

(51) International classification :H04L12/10,H04L12/40
(31) Priority Document No :10164898.8
(32) Priority Date :04/06/2010
(33) Name of priority country :EPO
(86) International Application No :PCT/IB2011/052359
Filing Date :30/05/2011
(87) International Publication No :WO 2011/151773
(61) Patent of Addition to Application Number :NA
Filing Date :NA
(62) Divisional to Application Number :NA
Filing Date :NA

(71)**Name of Applicant :**
1)KONINKLIJKE PHILIPS ELECTRONICS N.V.
Address of Applicant :GROENEWOUDSEWEG 1 EINDHOVEN 5621 BA NETHERLANDS
(72)**Name of Inventor :**
1)LUERKENS Peter
2)RADERMACHER Harald Josef Gunther
3)DRAAIJER Maurice Herman Johan

(57) Abstract :
A Power -over -Ethernet (PoE) device (200) for use in a PoE system is described. The PoE device (200) comprising a first PoE port (210) for connecting the device to an upstream PoE device or a central control unit a second PoE port (220) for connecting the device to a downstream device or PoE device and a control unit (240) for controlling data (335) and/or power communication (400) between the first (210) and second (220) PoE port. The control unit (240) further comprises a first power input terminal (305) connected to the first PoE port (210) to receive electrical power (320) for powering the control unit (240).

No. of Pages : 13 No. of Claims : 14

(12) PATENT APPLICATION PUBLICATION
(19) INDIA
(22) Date of filing of Application :18/12/2013

(21) Application No.10100/CHENP/2013 A
(43) Publication Date : 19/12/2014

(54) Title of the invention : AGRICULTURAL BALER WITH BALE CHUTE

(51) International classification :A01F15/08
(31) Priority Document No :BE2011/0403
(32) Priority Date :29/06/2011
(33) Name of priority country :Belgium
(86) International Application No :PCT/EP2012/062595
Filing Date :28/06/2012
(87) International Publication No :WO 2013/001018
(61) Patent of Addition to Application Number :NA
Filing Date :NA
(62) Divisional to Application Number :NA
Filing Date :NA

(71)**Name of Applicant :**
1)CNH BELGIUM N.V.
Address of Applicant :Leon Claeysstraat 3A B 8210 Zedelgem Belgium
(72)**Name of Inventor :**
1)VANDAMME Dirk A.R.

(57) Abstract :
An agricultural baler (10) comprising an hydraulic actuator (74) and accumulator being interconnected such that the upward force of the hydraulic actuator (74) on a bale chute (36) in a first position of the bale chute (36) is smaller than the downward force generated by the combined weight of the bale chute (36) and a completed bale (34) on the bale chute (36) but in a second position of the bale chute is larger than the downward force generated by the weight of the bale chute (36) to cause a completed bale to slide under the action of gravity along the bale chute (36) and to fall onto the field from a trailing end of the bale chute (36).

No. of Pages : 20 No. of Claims : 13

(12) PATENT APPLICATION PUBLICATION
(19) INDIA
(22) Date of filing of Application :18/12/2013
(21) Application No.10102/CHENP/2013 A
(43) Publication Date : 19/12/2014

(54) Title of the invention : FLUID EJECTION DEVICES AND METHODS THEREOF

(51) International classification :B41J2/175,B41J2/045
(31) Priority Document No :NA
(32) Priority Date :NA
(33) Name of priority country :NA
(86) International Application No :PCT/US2011/057506
Filing Date :24/10/2011
(87) International Publication No :WO 2013/062516
(61) Patent of Addition to Application Number :NA
Filing Date :NA
(62) Divisional to Application Number :NA
Filing Date :NA

(71)**Name of Applicant :**
1)HEWLETT PACKARD DEVELOPMENT COMPANY L.P.
Address of Applicant :11445 Compaq Center Drive W. Houston Texas 77070 U.S.A.
(72)**Name of Inventor :**
1)VAN BROCKLIN Andrew L.
2)GHOZEIL Adam L.
3)ANDERSON Daryl E.

(57) Abstract :
Fluid ejection devices and methods thereof are disclosed in the present disclosure. A method includes establishing fluid communication between an ejection chamber and a fluid supply chamber of the fluid ejection device such that the ejection chamber includes a nozzle and an ejection member to selectively eject fluid through the nozzle. The method also includes detecting at least one impedance in the fluid by a sensor unit having a sensor plate.

No. of Pages : 30 No. of Claims : 15

(12) PATENT APPLICATION PUBLICATION
(19) INDIA
(22) Date of filing of Application :18/12/2013

(21) Application No.10103/CHENP/2013 A
(43) Publication Date : 19/12/2014

(54) Title of the invention : ANTI THEFT DEVICES AND METHODS

(51) International classification	:E05B73/00,A47F7/024,H01R13/639
(31) Priority Document No	:1108841.6
(32) Priority Date	:26/05/2011
(33) Name of priority country	:U.K.
(86) International Application No	:PCT/EP2012/059761
Filing Date	:24/05/2012
(87) International Publication No	:WO 2012/160168
(61) Patent of Addition to Application Number	:NA
Filing Date	:NA
(62) Divisional to Application Number	:NA
Filing Date	:NA

(71)**Name of Applicant :**
1)THEOBALD James
Address of Applicant :Cell 4 The Kopshop 6 Old London Road Kingston upon Thames Surrey KT2 6QF U.K.
(72)**Name of Inventor :**
1)THEOBALD James

(57) Abstract :
An anti theft device is used for securing an electronic product (94) during retail display. The electronic product (94) has a socket (96) adapted for the transmission of power and/or information during normal operation of the electronic product (94). The anti theft device comprises a plug (10) for engagement with the socket (96). The plug has an insertable portion such as a pin (14) for insertion into the socket (96). The insertable portion (14) has a locking configuration (Figure 3) for locking of the insertable portion (14) within the socket (96) to prevent removal of the insertable portion (14) from the socket (96) while the insertable portion (14) is in the locking configuration. The insertable portion (14) also has a release configuration (Figure 2) for withdrawal of the insertable portion (14) from the socket (96). The plug (10) has a control mechanism (18 31) for holding the insertable portion (14) in the locking configuration such that when the plug (10) is engaged with the socket (96) the configuration of the insertable portion (14) can be changed from the locking configuration to the release configuration substantially only by operation of the control mechanism (18 31) by a security key (80). The anti theft device also includes a flexible attachment (12) for attaching the plug (10) to a fixture.

No. of Pages : 32 No. of Claims : 31

(12) PATENT APPLICATION PUBLICATION
(19) INDIA
(22) Date of filing of Application :12/12/2012
(21) Application No.10381/CHENP/2012 A
(43) Publication Date : 19/12/2014

(54) Title of the invention : MONITORING COMMUNICATIONS

(51) International classification :G06F17/00
(31) Priority Document No :12/833,505
(32) Priority Date :09/07/2010
(33) Name of priority country :U.S.A.
(86) International Application No :PCT/US2011/035321
Filing Date :05/05/2011
(87) International Publication No :WO/2012/005804
(61) Patent of Addition to Application Number :NA
Filing Date :NA
(62) Divisional to Application Number :NA
Filing Date :NA

(71)**Name of Applicant :**
1)BANK OF AMERICA CORPORATION
Address of Applicant :NC1-027-20-05 214 N. Tryon Street Charlotte North Carolina 28255 United States of America
(72)**Name of Inventor :**
1)GILLETTE Zachary Lynn
2)SORENSEN Amanda

(57) Abstract :
Methods computer readable media and apparatuses for monitoring communications are presented. A communication that includes non-public information may be identified. Subsequently it may be determined whether the communication meets at least one outlier condition. In response to determining that the communication meets the at least one outlier condition the communication may be submitted for review.

No. of Pages : 38 No. of Claims : 21

(12) PATENT APPLICATION PUBLICATION
(19) INDIA
(22) Date of filing of Application :13/12/2012
(21) Application No.10387/CHENP/2012 A
(43) Publication Date : 19/12/2014

(54) Title of the invention : LOW COST MAKING OF A LOW CARBON LOW SULFUR AND LOW NITROGEN STEEL USING CONVENTIONAL STEELMAKING EQUIPMENT

(51) International classification :C21C5/52,B22D27/00,C21C7/06
(31) Priority Document No :12/818,619
(32) Priority Date :18/06/2010
(33) Name of priority country :U.S.A.
(86) International Application No :PCT/AU2011/000722
Filing Date :15/06/2011
(87) International Publication No :WO/2011/156858
(61) Patent of Addition to Application Number :NA
Filing Date :NA
(62) Divisional to Application Number :NA
Filing Date :NA

(71)**Name of Applicant :**
1)NUCOR CORPORATION
Address of Applicant :1915 Rexford Road Charlotte North Carolina 28211 United States of America
(72)**Name of Inventor :**
1)McQUILLIS Gary
2)JENKINS Jerome
3)ROSS Neal
4)PANDA Dhiren
5)SOSINSKY David J.

(57) Abstract :
A method of making a steel with low carbon less than 0.035% by weight including steps of preparing a heat of molten steel composition in a steelmaking furnace to a tapping temperature as desired for desulfurization at a VTD tapping open into a ladle the molten steel composition with an oxygen level between about 600 and 1120 ppm providing slag forming compound to the ladle to form a slag cover over the molten steel composition in the ladle transporting the molten steel to a VTD decarburizing the molten steel composition at the VTD by drawing a vacuum of less than 650 millibars after decarburizing transporting the molten steel to an LMF and deoxidizing the molten steel composition after deoxidizing returning to the VTD to desulfurize and degas the molten steel composition and casting the molten steel composition to form a steel with low carbon less than 0.035% by weight.

No. of Pages : 37 No. of Claims : 18

(12) PATENT APPLICATION PUBLICATION
(19) INDIA
(22) Date of filing of Application :07/12/2012
(21) Application No.10465/CHENP/2012 A
(43) Publication Date : 19/12/2014

(54) Title of the invention : SIMULTANEOUS MULTI-MODALITY INVERSE OPTIMIZATION FOR RADIOTHERAPY TREATMENT PLANNING

(51) International classification :G06F19/00
(31) Priority Document No :61/353672
(32) Priority Date :11/06/2010
(33) Name of priority country :U.S.A.
(86) International Application No :PCT/IB2011/051842
Filing Date :27/04/2011
(87) International Publication No :WO/2011/154853
(61) Patent of Addition to Application Number :NA
Filing Date :NA
(62) Divisional to Application Number :NA
Filing Date :NA

(71)**Name of Applicant :**
1)KONINKLIJKE PHILIPS ELECTRONICS N.V.
Address of Applicant :GROENEWOUDSEWEG 1 EINDHOVEN 5621 BA NETHERLANDS
(72)**Name of Inventor :**
1)MELTSNER Michael
2)XIONG Ying
3)KAUS Michael

(57) Abstract :
When performing multimodal radiotherapy planning an optimizer (36) concurrently optimizes a combined treatment plan that employs an intensity modulated radiotherapy (IMRT) device (30) and an intensity modulated proton therapy (IMPT) that respectively generate a photon beam and an ion beam for treating a volume of interest (18) in a patient (34). A simulator (40) iteratively generates multiple variations of a simulation model (44) according to optimization parameters that are varied by the optimizer (36) until the simulation model (44) satisfies user-entered treatment objective criteria (48) (e.g. maximum dose does placement etc.)

No. of Pages : 23 No. of Claims : 24

(12) PATENT APPLICATION PUBLICATION
(19) INDIA
(22) Date of filing of Application :07/12/2012

(21) Application No.10466/CHENP/2012 A
(43) Publication Date : 19/12/2014

(54) Title of the invention : TISSUE CLASSIFICATION

(51) International classification :G06T7/00,G06K9/46
(31) Priority Document No :61/354291
(32) Priority Date :14/06/2010
(33) Name of priority country :U.S.A.
(86) International Application No :PCT/IB2011/051845
Filing Date :27/04/2011
(87) International Publication No :WO/2011/158135
(61) Patent of Addition to Application Number :NA
Filing Date :NA
(62) Divisional to Application Number :NA
Filing Date :NA

(71)**Name of Applicant :**
1)KONINKLIJKE PHILIPS ELECTRONICS N.V.
Address of Applicant :GROENEWOUDSEWEG 1 EINDHOVEN 5621 BA NETHERLANDS
(72)**Name of Inventor :**
1)LAMASH Yechiel
2)LESSICK Jonathan
3)GRINGAUZ Asher

(57) Abstract :
A method for classifying tissue as normal or abnormal tissue includes obtaining segmented reconstructed volumetric image data for predetermined tissue of interest generating a 2D voxel representation of the segmented reconstructed volumetric image data and classifying voxels of the segmented reconstructed volumetric image data as corresponding to abnormal and normal tissue based on the 2D voxel representation.

No. of Pages : 18 No. of Claims : 20

(12) PATENT APPLICATION PUBLICATION
(19) INDIA
(22) Date of filing of Application :07/12/2012
(21) Application No.10470/CHENP/2012 A
(43) Publication Date : 19/12/2014

(54) Title of the invention : ILLUMINATION DEVICE WITH WAVEGUIDE AND LEDS

(51) International classification :G02B6/00,H01L33/58
(31) Priority Document No :10166243.5
(32) Priority Date :17/06/2010
(33) Name of priority country :EPO
(86) International Application No :PCT/IB2011/052544
Filing Date :10/06/2011
(87) International Publication No :WO/2011/158160
(61) Patent of Addition to Application Number :NA
Filing Date :NA
(62) Divisional to Application Number :NA
Filing Date :NA

(71)**Name of Applicant :**
1)KONINKLIJKE PHILIPS ELECTRONICS N.V.
Address of Applicant :GROENEWOUDSEWEG 1 EINDHOVEN 5621 BA NETHERLANDS
(72)**Name of Inventor :**
1)BOONEKAMP Erik
2)IJZERMAN Willem Lubertus
3)VISSENBERG Michel Cornelis Josephus Marie
4)TUKKER Teunis Willem

(57) Abstract :
The invention relates to an illumination device (1) comprising an optical waveguide (2) and a number of (connections for) light sources (3) especially LEDs - positioned along the waveguide (3). This waveguide has a central axis (4) at a distance r to the surface of the waveguide said surface comprising a light entrance surface (6) on which the (connections for) light sources are positioned and a curved light exit surface (5) wherein viewed along the circumference of the curved surface (5) the distance r to a first intersection (8) between the flat surface (6)and the curved surface (5) changes to a second distance of different value at the second intersection (9) between said surfaces. The invention also relates to a luminaire comprising such an illumination device (1).

No. of Pages : 25 No. of Claims : 11

(12) PATENT APPLICATION PUBLICATION
(19) INDIA
(22) Date of filing of Application :07/12/2012
(21) Application No.10473/CHENP/2012 A
(43) Publication Date : 19/12/2014

(54) Title of the invention : IDENTITY MATCHING OF PATIENT RECORDS

(51) International classification :G06F19/00
(31) Priority Document No :10166325.0
(32) Priority Date :17/06/2010
(33) Name of priority country :EPO
(86) International Application No :PCT/IB2011/052548
Filing Date :10/06/2011
(87) International Publication No :WO/2011/158163
(61) Patent of Addition to Application Number :NA
Filing Date :NA
(62) Divisional to Application Number :NA
Filing Date :NA

(71)**Name of Applicant :**
1)KONINKLIJKE PHILIPS ELECTRONICS N.V.
Address of Applicant :GROENEWOUDSEWEG 1 EINDHOVEN 5621 BA NETHERLANDS
(72)**Name of Inventor :**
1)BUCUR Anca I. D.
2)VDOVJAK Richard
3)VAN LEEUWEN Jasper J. A.

(57) Abstract :
A system for matching a pair of patient records as belonging to the same individual or patient is disclosed. A set of matching rules (4) represents persistent characteristics of clinical properties of patients. A clinical property extractor (5) is used for extracting at least one first clinical property from clinical information contained in the first patient record (1) and at least one second clinical property from clinical information contained in the second patient record (2). A match detector (3) is used for detecting whether the first patient record (1) and the second patient record (2) relate to the same patient based on the first clinical property the second clinical property and the set of matching rules 4. A demographic property extractor (6) is used for extracting demographic data.

No. of Pages : 20 No. of Claims : 15

(12) PATENT APPLICATION PUBLICATION
(19) INDIA
(22) Date of filing of Application :07/12/2012
(21) Application No.10474/CHENP/2012 A
(43) Publication Date : 19/12/2014

(54) Title of the invention : DEVICE FOR FROTHING A LIQUID

(51) International classification :A47J31/44
(31) Priority Document No :10166464.7
(32) Priority Date :18/06/2010
(33) Name of priority country :EPO
(86) International Application No :PCT/IB2011/052566
Filing Date :14/06/2011
(87) International Publication No :WO/2011/158171
(61) Patent of Addition to Application Number :NA
Filing Date :NA
(62) Divisional to Application Number :NA
Filing Date :NA

(71)**Name of Applicant :**
1)KONINKLIJKE PHILIPS ELECTRONICS N.V.
Address of Applicant :GROENEWOUDSEWEG 1 EINDHOVEN 5621 BA NETHERLANDS
(72)**Name of Inventor :**
1)NOORDHUIS Joeke
2)DAY Richard Francis
3)WRENCH Nathan James

(57) Abstract :
A device (3) for frothing a liquid comprises a first space (10) having an outlet (11) for allowing content from the space (10) to flow out of the space (10) means (40) for supplying the liquid to be frothed to the first space (10) and a second space (50) for allowing the liquid to mix with a gas in order for a frothing process to take place. The second space (50) is open to the first space (10) and has an inlet (51) for receiving content from the first space (10) which is separated from the outlet (11) of the first space (10) by a free space (60) for containing the frothing gas. At the position of this free space (60) when the device (3) is operated and frothing gas is present the frothing gas is allowed to flow into the second space (50).

No. of Pages : 18 No. of Claims : 12

(12) PATENT APPLICATION PUBLICATION
(19) INDIA
(22) Date of filing of Application :17/12/2012

(21) Application No.10516/CHENP/2012 A
(43) Publication Date : 19/12/2014

(54) Title of the invention : METHOD AND APPARATUS FOR RELAY NODE MANAGEMENT AND AUTHORIZATION

(51) International classification	:H04W12/06,H04L12/24,H04L29/06
(31) Priority Document No	:61/356,409
(32) Priority Date	:18/06/2010
(33) Name of priority country	:U.S.A.
(86) International Application No	:PCT/US2011/040961
Filing Date	:17/06/2011
(87) International Publication No	:WO 2011/160070
(61) Patent of Addition to Application Number	:NA
Filing Date	:NA
(62) Divisional to Application Number	:NA
Filing Date	:NA

(71)**Name of Applicant :**
1)QUALCOMM INCORPORATED
Address of Applicant :Attn: International IP Administration 5775 Morehouse Drive San Diego California 92121-1714 United States of America
(72)**Name of Inventor :**
1)PALANIGOUNDER Anand
2)ESCOTT Adrian Edward

(57) Abstract :
Methods and apparatuses are provided for deploying relay nodes in a communication network. A relay node can initially be wirelessly authenticated to a network entity using initial security credentials. In response to a successful authentication the relay node is authorized to wirelessly communicate with the communication network for a limited purpose of configuring the relay node for relay device operations. The relay node can receive new security credentials from the communication network and is subsequently re-authenticated to the network entity using the new security credentials. In response to a successful re-authentication the relay node is authorized by the network to operate as a relay device for conveying traffic between one or more access terminals and the communication network.

No. of Pages : 51 No. of Claims : 43

(12) PATENT APPLICATION PUBLICATION
(19) INDIA
(22) Date of filing of Application :17/12/2012
(21) Application No.10517/CHENP/2012 A
(43) Publication Date : 19/12/2014

(54) Title of the invention : OVERPRODUCTION OF JASMONIC ACID IN TRANSGENIC PLANTS

(51) International classification :C12N15/82
(31) Priority Document No :10 54754
(32) Priority Date :16/06/2010
(33) Name of priority country :France
(86) International Application No :PCT/EP2011/060026
Filing Date :16/06/2011
(87) International Publication No :WO/2011/157791
(61) Patent of Addition to Application Number :NA
Filing Date :NA
(62) Divisional to Application Number :NA
Filing Date :NA

(71)**Name of Applicant :**
1)INSTITUT NATIONAL DE LA RECHERCHE AGRONOMIQUE
Address of Applicant :147 rue de lUniversit F-75007 Paris France
2)INSTITUT DE RECHERCHE POUR LE D‰VELOPPEMENT (IRD)
(72)**Name of Inventor :**
1)CHAMPION Antony
2)NICOLE Michel
3)DOUMAS Patrick

(57) Abstract :
The present invention relates to methods for obtaining a transgenic plant that overproduces jasmonic acid and optionally OPDA a jasmonic acid precursor. Said methods include transforming the plant using a nucleic acid encoding ORA47. The accumulation of jasmonic acid confers in particular to the transformed plant an improved resistance to pathogenic agents. The transgenic plants obtained may also be used for the production of pharmaceutically important secondary metabolites whose synthesis is induced by jasmonates.

No. of Pages : 54 No. of Claims : 19

(12) PATENT APPLICATION PUBLICATION
(19) INDIA
(22) Date of filing of Application :17/12/2012

(21) Application No.10519/CHENP/2012 A
(43) Publication Date : 19/12/2014

(54) Title of the invention : CONCRETE LIFTING ANCHORS

(51) International classification :E04C5/12,B66F19/02,E04C5/16
(31) Priority Document No :NA
(32) Priority Date :NA
(33) Name of priority country :NA
(86) International Application No :PCT/AU2010/000830
Filing Date :30/06/2010
(87) International Publication No:WO/2011/006188
(61) Patent of Addition to Application Number :NA
Filing Date :NA
(62) Divisional to Application Number :NA
Filing Date :NA

(71)**Name of Applicant :**
1)CASNE VERIGE PTY LTD
Address of Applicant :Ground Floor 18 Dequetteville Terrace Kent Town South Australia 5067 Australia
(72)**Name of Inventor :**
1)SLADOJEVIC Robert

(57) Abstract :
A shear bar for an edge lift anchor for a concrete panel the shear bar being a bar shaped to provide a central portion to engage an upper edge of the lifting anchor when installed in the panel and legs inclining downwardly from each end of the central portion the underside of each leg being profiled to lock into the surrounding concrete the profiling being formed by a series of longitudinally spaced formations each of generally saw-toothed shape with a leading edge of each formation facing towards the central portion such that on application of shear load to the shear bar the leg will lock into the concrete with a generally compressive loading being applied to the concrete in the zone between the two legs..

No. of Pages : 11 No. of Claims : 6

(12) PATENT APPLICATION PUBLICATION
(19) INDIA
(22) Date of filing of Application :17/12/2012
(21) Application No.10520/CHENP/2012 A
(43) Publication Date : 19/12/2014

(54) Title of the invention : PRIORITIZATION OF DATA PACKETS

(51) International classification :H04L12/56,H04L1/18,H04W80/02
(31) Priority Document No :61/360,948
(32) Priority Date :02/07/2010
(33) Name of priority country :U.S.A.
(86) International Application No :PCT/SE2011/050858
Filing Date :28/06/2011
(87) International Publication No :WO/2012/002890
(61) Patent of Addition to Application Number :NA
Filing Date :NA
(62) Divisional to Application Number :NA
Filing Date :NA

(71)**Name of Applicant :**
1)TELEFONAKTIEBOLAGET LM ERICSSON (PUBL)
Address of Applicant :SE-164 83 Stockholm Sweden
(72)**Name of Inventor :**
1)JONSSON Anders
2)WIDEGREN Ina

(57) Abstract :
A method of operating a telecommunications node (28) through which packets of differing priority are conveyed comprises receiving plural data packets from a source external (26) to the node the plural data packets including both ordinary packets and a priority packet; and storing the plural data packets in a queue structure (36) in order of arrival so that the priority packet is read out of the queue structure before the ordinary packets are read out of the queue structure (36) thereby expediting output of the priority packet from the node relative to the ordinary packets.

No. of Pages : 45 No. of Claims : 20

(12) PATENT APPLICATION PUBLICATION
(19) INDIA
(22) Date of filing of Application :17/12/2012
(21) Application No.10523/CHENP/2012 A
(43) Publication Date : 19/12/2014

(54) Title of the invention : PORTABLE COMPUTING SYSTEM AND PORTABLE COMPUTER FOR USE WITH SAME

(51) International classification :G06F19/00
(31) Priority Document No :61/365,061
(32) Priority Date :16/07/2010
(33) Name of priority country :U.S.A.
(86) International Application No :PCT/US2011/043827
Filing Date :13/07/2011
(87) International Publication No :WO/2012/009419
(61) Patent of Addition to Application Number :NA
Filing Date :NA
(62) Divisional to Application Number :NA
Filing Date :NA

(71)**Name of Applicant :**
1)ARNOUSE Michael
Address of Applicant :15 Hickory Drive Old Brookville NY 11545 United States of America
(72)**Name of Inventor :**
1)ARNOUSE Michael

(57) Abstract :
A system comprises a portable device having at least one storage component a reader for interaction with the portable device to communicate with the data storage component a processor for providing the reader and the portable device with computing capabilities and a link for communication to a network.

No. of Pages : 35 No. of Claims : 21

(12) PATENT APPLICATION PUBLICATION
(19) INDIA
(22) Date of filing of Application :26/12/2013
(21) Application No.10281/CHENP/2013 A
(43) Publication Date : 19/12/2014

(54) Title of the invention : INJECTION ELEMENT

(51) International classification :F02K9/52,B01F5/04,F02K9/42
(31) Priority Document No :1156143
(32) Priority Date :07/07/2011
(33) Name of priority country :France
(86) International Application No :PCT/FR2012/051473
Filing Date :27/06/2012
(87) International Publication No :WO 2013/004949
(61) Patent of Addition to Application Number :NA
Filing Date :NA
(62) Divisional to Application Number :NA
Filing Date :NA

(71)**Name of Applicant :**
1)SNECMA
Address of Applicant :2 Boulevard du Gnral Martial Valin F 75015 Paris France
(72)**Name of Inventor :**
1)JAMES Philippe
2)CRUZ Carlos

(57) Abstract :
The invention relates to the field of injection elements (201) for injecting two propellants (E1 E2) into a combustion chamber especially designed for a rocket engine having at least one combustion chamber of the type comprising an injector combining at least one such injection elements (201). Such an injection element (201) comprises a first annular conduit (206) for injecting a first propellant (E1) and a second annular conduit (207) for injecting a second propellant (E2) the second conduit (207) being coaxial and outwardly adjacent to the first conduit (206) and potentially a third coaxial annular conduit (208) that is outwardly adjacent to the second conduit (207). The first conduit (206) surrounds a central body (205) of the injection element (201) said central body (205) comprising a cavity (209) that communicates with an outer surface (212) of the central body (205) and is designed so as to dampen at least one predetermined acoustic frequency f.

No. of Pages : 18 No. of Claims : 10

(12) PATENT APPLICATION PUBLICATION
(19) INDIA
(22) Date of filing of Application :07/12/2012
(21) Application No.10284/CHENP/2012 A
(43) Publication Date : 19/12/2014

(54) Title of the invention : CONTROLLING FIELD DISTRIBUTION OF A WIRELESS POWER TRANSMITTER

(51) International classification :H04B5/00,H02J7/02
(31) Priority Document No :61/334,783
(32) Priority Date :14/05/2010
(33) Name of priority country :U.S.A.
(86) International Application No :PCT/US2011/036421
Filing Date :13/05/2011
(87) International Publication No :WO/2011/143547
(61) Patent of Addition to Application Number :NA
Filing Date :NA
(62) Divisional to Application Number :NA
Filing Date :NA

(71)**Name of Applicant :**
1)QUALCOMM INCORPORATED
Address of Applicant :ATTN: International IP Administration 5775 Morehouse Drive San Diego California 92121-1714 U.S.A.
(72)**Name of Inventor :**
1)ZHEN NING LOW
2)CHARLES E. WHEATLEY III
3)ADAM A MUDRICK
4)WILLIAM H VON NOVAK

(57) Abstract :
Exemplary embodiments are directed to control of field distribution of a wireless power transmitter (700A). A transmitter may include a transmit antenna (601) configured to generate a field. The transmitter may further include at least one parasitic antenna proximate the transmit antenna and configured to modify a distribution of the generated field.

No. of Pages : 38 No. of Claims : 21

(12) PATENT APPLICATION PUBLICATION
(19) INDIA
(22) Date of filing of Application :07/12/2012
(21) Application No.10285/CHENP/2012 A
(43) Publication Date : 19/12/2014

(54) Title of the invention : RESONANCE DETECTION AND CONTROL WITHIN A WIRELESS POWER SYSTEM

(51) International classification :H04B5/00,H02J7/02
(31) Priority Document No :61/334,523
(32) Priority Date :13/05/2010
(33) Name of priority country :U.S.A.
(86) International Application No :PCT/US2011/036410
Filing Date :13/05/2011
(87) International Publication No :WO/2011/143539
(61) Patent of Addition to Application Number :NA
Filing Date :NA
(62) Divisional to Application Number :NA
Filing Date :NA

(71)**Name of Applicant :**
1)QUALCOMM INCORPORATED
Address of Applicant :ATTN: International IP Administration 5775 Morehouse Drive San Diego California 92121 U.S.A.
(72)**Name of Inventor :**
1)CHARLES E. WHEATLEY
2)ZHEN NING LOW

(57) Abstract :
Exemplary embodiments are directed to resonant frequency tuning. A device may include a coil (L1) for transmitting wireless power. The device may further include an element to selectively modify a resonant frequency of the transmitter according to at least one of inserting the element (cp) into the transmit coil and inductively coupling the element (L5) to the transmit coil

No. of Pages : 37 No. of Claims : 20

(12) PATENT APPLICATION PUBLICATION
(19) INDIA
(22) Date of filing of Application :10/12/2012
(21) Application No.10291/CHENP/2012 A
(43) Publication Date : 19/12/2014

(54) Title of the invention : PLANTS HAVING ENHANCED YIELD-RELATED TRAITS AND METHOD FOR MAKING THE SAME

(51) International classification :C12N15/82,A01H5/00,C12N1/21
(31) Priority Document No :61/358,028
(32) Priority Date :24/06/2010
(33) Name of priority country :U.S.A.
(86) International Application No :PCT/IB2011/052699
Filing Date :21/06/2011
(87) International Publication No :WO/2011/161617
(61) Patent of Addition to Application Number :NA
Filing Date :NA
(62) Divisional to Application Number :NA
Filing Date :NA

(71)**Name of Applicant :**
1)BASF PLANT SCIENCE COMPANY GMBH
Address of Applicant :67056 Ludwigshafen Germany
(72)**Name of Inventor :**
1)REUZEAU Christophe
2)VANDENABEELE Steven
3)FRANKARD Valerie

(57) Abstract :
The present invention relates generally to the field of molecular biology and to the methods for enhancing various economically important yield-related traits in plants. More specifically the present invention relates to a method for enhancing yield-related traits in plants by modulating expression of a nucleic acid encoding an OsRSZ33 RRM polypeptide or a growth-related protein (GRP) having at least 25% amino acid sequence identity to SEQ ID NO:251 or a ZPR polypeptide. The present invention also relates to plants having modulated expression of a nucleic acid encoding an OsRSZ33 RRM polypeptide or a growth-related polypeptide as defined herein or a ZPR polypeptide. Such plants have enhanced yield-related traits relative to controls. The invention also provides hitherto unknown OsRSZ33 RRM-encoding nucleic acids or GRP -encoding nucleic acids or a ZPR polypeptide and constructs comprising the same which are useful in performing the methods of the invention.

No. of Pages : 202 No. of Claims : 76

(12) PATENT APPLICATION PUBLICATION
(19) INDIA
(22) Date of filing of Application :20/12/2012
(21) Application No.10634/CHENP/2012 A
(43) Publication Date : 19/12/2014

(54) Title of the invention : HYBRID RADIO ARCHITECTURE FOR REPEATERS USING RF CANCELLATION REFERENCE

(51) International classification :H04B7/26,H04B1/52
(31) Priority Document No :12/827,669
(32) Priority Date :30/06/2010
(33) Name of priority country :U.S.A.
(86) International Application No :PCT/US2011/042687
Filing Date :30/06/2011
(87) International Publication No :WO/2012/003384
(61) Patent of Addition to Application Number :NA
Filing Date :NA
(62) Divisional to Application Number :NA
Filing Date :NA

(71)**Name of Applicant :**
1)QUALCOMM INCORPORATED
Address of Applicant :Attn: International IP Administration 5775 Morehouse Drive San Diego California 92121-1714 United States of America
(72)**Name of Inventor :**
1)GAINEY Kenneth M.
2)PROCTOR James Arthur Jr.
3)GORE Dhananjay Ashok

(57) Abstract :
A wireless repeater includes a receiver circuit implemented as an intermediate frequency (IF) subsampling receiver and a transmitter circuit implemented as a direct conversion (zero-IF) transmitter. The repeater further includes a reference receiver implemented as an IF subsampling receiver to sample a portion of the transmit signal prior to over-the-air transmission for use as the reference signal for channel estimation. Highly accurate channel estimation is obtained by using the reference signal from the reference receiver as the reference signal accounts for distortions in the transmitter circuit of the repeater. The repeater may include an echo canceller to cancel an estimated feedback amount from an input signal based on the channel estimation.

No. of Pages : 34 No. of Claims : 22

(12) PATENT APPLICATION PUBLICATION
(19) INDIA
(22) Date of filing of Application :10/12/2012
(21) Application No.10293/CHENP/2012 A
(43) Publication Date : 19/12/2014

(54) Title of the invention : DETERMINATION OF POSITIONS OF WIRELESS TRANSCEIVERS TO BE ADDED TO A WIRELESS COMMUNICATION NETWORK

(51) International classification :G01S5/10
(31) Priority Document No :61/360,832
(32) Priority Date :01/07/2010
(33) Name of priority country :U.S.A.
(86) International Application No :PCT/US2011/042722
Filing Date :30/06/2011
(87) International Publication No :WO/2012/003411
(61) Patent of Addition to Application Number :NA
Filing Date :NA
(62) Divisional to Application Number :NA
Filing Date :NA

(71)**Name of Applicant :**
1)QUALCOMM INCORPORATED
Address of Applicant :Attn: International IP Administration 5775 Morehouse Drive San Diego California 92121-1714 United States of America
(72)**Name of Inventor :**
1)FISCHER Sven
2)AMIN Muhammad Awais
3)PALANKI Ravi

(57) Abstract :
Positions of non-reference wireless transceivers to be added to a wireless communication network are determined as follows. Each non-reference wireless transceiver performs measurements of times of arrival (TO A) of signals transmitted by other non-reference wireless transceivers, as well as reference wireless transceivers. Thereafter, time difference of arrival (TDOA) values are computed from at least two types of pairs of measurements as follows: (a) unknown-unknown TDOA values are obtained as differences between TOA measurements of signals transmitted by non- reference wireless transceivers and (b) unknown-known TDOA values are obtained as differences between a TOA measurement of a signal transmitted by a non-reference wireless transceiver and another TOA measurement of another signal transmitted by a reference wireless transceiver. Both types of TDOA values are used to solve simultaneous equations to identify the positions of the non-reference wireless transceivers and optionally times of transmission of the signals by the non-reference wireless transceivers.

No. of Pages : 124 No. of Claims : 30

(12) PATENT APPLICATION PUBLICATION
(19) INDIA
(22) Date of filing of Application :21/12/2012

(21) Application No.10640/CHENP/2012 A
(43) Publication Date : 19/12/2014

(54) Title of the invention : ORGANIC ELECTROLUMINESCENCE DEVICE WITH SEPARATING FOIL

(51) International classification :H01L51/52
(31) Priority Document No :10166885.3
(32) Priority Date :22/06/2010
(33) Name of priority country :EPO
(86) International Application No :PCT/IB2011/052591
Filing Date :15/06/2011
(87) International Publication No :WO/2011/161586
(61) Patent of Addition to Application Number :NA
Filing Date :NA
(62) Divisional to Application Number :NA
Filing Date :NA

(71)**Name of Applicant :**
1)KONINKLIJKE PHILIPS ELECTRONICS N.V.
Address of Applicant :GROENEWOUDSEWEG 1 EINDHOVEN 5621 BA NETHERLANDS
(72)**Name of Inventor :**
1)BOERNER Herbert F.
2)GIERTH Reinald M.
3)GRABOWSKI Stefan P.
4)BOUTEN Petrus C. P.
5)VAN DE WEIJER Peter

(57) Abstract :
The invention relates to OLEDs (1) having a substrate (2) a first electrode layer (3) a layer of organic electroluminescence material (4) a second electrode layer (5) a cover layer (6) moisture-absorbing means (9) and a separating foil (10) of resilient material. According to the invention said foil (10) is positioned between the second electrode layer (5) and the moisture-absorbing means (9). This feature results in a longer mean life-time of the OLED. Advantageously spacer structures (12) (preferably formed as dots) are applied on the separating foil (10) between the foil (10) and the cover (6). This prevents discoloring effects around the rim of the OLED material.

No. of Pages : 18 No. of Claims : 15

(12) PATENT APPLICATION PUBLICATION
(19) INDIA
(22) Date of filing of Application :21/12/2012

(21) Application No.10641/CHENP/2012 A
(43) Publication Date : 19/12/2014

(54) Title of the invention : DEVICE FOR PURIFYING A FLUID

(51) International classification :A47L9/20,B01D29/90,B01D46/00
(31) Priority Document No :10166862.2
(32) Priority Date :22/06/2010
(33) Name of priority country :EPO
(86) International Application No :PCT/IB2011/052622
Filing Date :16/06/2011
(87) International Publication No :WO/2011/161591
(61) Patent of Addition to Application Number :NA
Filing Date :NA
(62) Divisional to Application Number :NA
Filing Date :NA

(71)**Name of Applicant :**
1)KONINKLIJKE PHILIPS ELECTRONICS N.V.
Address of Applicant :GROENEWOUDSEWEG 1 EINDHOVEN 5621 BA NETHERLANDS
(72)**Name of Inventor :**
1)VAN DER KOOI Johannes Tseard
2)VOORHORST Fokke Roelof
3)KLEINE-DOEPKE Bastian Cornelis
4)SALOMONS Maiza Georgien
5)JOUSMA Hendrik Richard
6)MONDT Eva

(57) Abstract :
A device (1) comprises filtering means (30) for removing particles from a fluid which have a particle collecting face (31) for collecting particles during use of the device (1) and a chamber (10) in which a fluid is present and in which the filtering means (30) are arranged. An inlet (11) of the chamber (10) comprises a spouting part (20) which serves for spouting the fluid to be filtered in a direction towards the particle collecting face (31) of the filtering means (30). An arrangement of the spouting part (20) and the particle collecting face (31) with respect to each other is adapted to generate during operation of the device (1) a rotating flow pattern in the fluid that is present in the chamber (10) under the influence of the flow of the fluid to be filtered whereby particles can be blown away from the particle collecting face (31).

No. of Pages : 29 No. of Claims : 15

(12) PATENT APPLICATION PUBLICATION
(19) INDIA
(22) Date of filing of Application :21/12/2012
(21) Application No.10642/CHENP/2012 A
(43) Publication Date : 19/12/2014

(54) Title of the invention : A MOUTHPIECE FOR CLEANING TEETH WITH A MECHANICAL DRIVE TRAIN

(51) International classification :A61C17/22,A46B9/04,A61C17/34
(31) Priority Document No :61/357260
(32) Priority Date :22/06/2010
(33) Name of priority country :U.S.A.
(86) International Application No :PCT/IB2011/051792
Filing Date :25/04/2011
(87) International Publication No :WO/2011/161556
(61) Patent of Addition to Application Number :NA
Filing Date :NA
(62) Divisional to Application Number :NA
Filing Date :NA

(71)**Name of Applicant :**
1)KONINKLIJKE PHILIPS ELECTRONICS N.V.
Address of Applicant :GROENEWOUDSEWEG 1 EINDHOVEN 5621 BA NETHERLANDS
(72)**Name of Inventor :**
1)VEENDIJK Arif
2)STAPELBROEK Martinus Bernardus
3)HEADSTROM Patrick A.
4)VOORHORST Fokke Roelof
5)STEUR Jelte
6)WESTRUP Gert H.

(57) Abstract :
The mouthpiece appliance includes an assembly for receiving teeth (12) which includes a plurality of cleansing portions typically two opposing side portions (14 16) and an intermediate center portion (18). The brushing portions include bristle sections which are adapted to clean teeth. The appliance includes at least one DC motor assembly (26) with an output shaft with an eccentric mass of crankshaft (28). The appliance further includes a mechanical motor cover comprising a plurality of arm members which are arranged to connect the DC motor assembly to the cleansing portions of the appliance so that as the unbalanced weight on the output shaft rotates movement of the cleansing portions toward and away from the teeth or along the surfaces of the teeth occurs producing cleansing of the teeth.

No. of Pages : 31 No. of Claims : 22

(12) PATENT APPLICATION PUBLICATION
(19) INDIA
(22) Date of filing of Application :21/12/2012
(21) Application No.10643/CHENP/2012 A
(43) Publication Date : 19/12/2014

(54) Title of the invention : LASER

(51) International classification :H01S3/16,C09K11/77,H01S3/0941
(31) Priority Document No :10166783.0
(32) Priority Date :22/06/2010
(33) Name of priority country :EPO
(86) International Application No :PCT/IB2011/052532
Filing Date :10/06/2011
(87) International Publication No :WO/2011/161580
(61) Patent of Addition to Application Number :NA
Filing Date :NA
(62) Divisional to Application Number :NA
Filing Date :NA

(71)**Name of Applicant :**
1)KONINKLIJKE PHILIPS ELECTRONICS N.V.
Address of Applicant :GROENEWOUDSEWEG 1 EINDHOVEN 5621 BA NETHERLANDS
(72)**Name of Inventor :**
1)WEICHMANN Ulrich
2)FECHNER Matthias Alexander Wilhelm
3)PETERMANN Herbert Walter Klaus
4)HUBER Gunter

(57) Abstract :
The invention relates to a laser (1) for emitting laser light in the visible spectral range. A rare earth doped anisotropic crystal (2) comprising a 5d-4ftransition is arranged within a laser resonator (7 8) and a pumping light source (3) pumps the crystal (2) for generating laser light in the visible spectral range by using the 5d-4ftransition. The 5d-4ftransition of the rare earth doped anisotropic crystal comprises an absorption band extending over several nm. Thus pump light having a wavelength within a relatively broad wavelength range can be used. This reduces the requirements with respect to the wavelength accuracy of the pumping light source and thus more pumping light sources of an amount of produced pumping light sources can be used for assembling the laser thereby reducing the amount of rejects.

No. of Pages : 22 No. of Claims : 15

(12) PATENT APPLICATION PUBLICATION
(19) INDIA
(22) Date of filing of Application :21/12/2012

(21) Application No.10644/CHENP/2012 A
(43) Publication Date : 19/12/2014

(54) Title of the invention : DETECTION OF MAGNETIC PARTICLES AND THEIR CLUSTERING

(51) International classification :H01F1/00,H01F1/44
(31) Priority Document No :10166839.0
(32) Priority Date :22/06/2010
(33) Name of priority country :EPO
(86) International Application No :PCT/IB2010/055495
Filing Date :30/11/2010
(87) International Publication No :WO/2011/161499
(61) Patent of Addition to Application Number :NA
Filing Date :NA
(62) Divisional to Application Number :NA
Filing Date :NA

(71)**Name of Applicant :**
1)KONINKLIJKE PHILIPS ELECTRONICS N.V.
Address of Applicant :GROENEWOUDSEWEG 1 EINDHOVEN 5621 BA NETHERLANDS
(72)**Name of Inventor :**
1)VAN ZON Joannes Baptist Adrianus Dionisius
2)OVSYANKO Mikhail Mikhaylovich
3)EVERS Toon Hendrik
4)SIJBERS Mara Johanna Jacoba

(57) Abstract :
The invention relates to a method and associated apparatuses (100) for the detection of magnetic particles (MP) in a sample chamber (111). The method comprises the determination of a particle-parameter that is related to the amount of magnetic particles (MP) in a first detection region (P C) the determination of a cluster-parameter that is related to the degree of clustering of magnetic particles (MP) in a second detection region (P C) and the evaluation of the particle-parameter based on the cluster-parameter. Various apparatuses are disclosed that can be applied in said method. In one apparatus (100) a magnetic field (B) is generated in the sample chamber (111) in such a way that it has different inclinations in a first and second field region (P C) and/or that it is oblique to the binding surface (112) in at least one field region.

No. of Pages : 34 No. of Claims : 14

(12) PATENT APPLICATION PUBLICATION
(19) INDIA
(22) Date of filing of Application :21/12/2012
(21) Application No.10645/CHENP/2012 A
(43) Publication Date : 19/12/2014

(54) Title of the invention : INTEROPERABILITY BETWEEN A PLURALITY OF DATA PROTECTION SYSTEMS

(51) International classification :G06F21/62
(31) Priority Document No :PCT/CN2010/074311
(32) Priority Date :23/06/2010
(33) Name of priority country :China
(86) International Application No :PCT/IB2011/052362
Filing Date :30/05/2011
(87) International Publication No :WO/2011/161565
(61) Patent of Addition to Application Number :NA
Filing Date :NA
(62) Divisional to Application Number :NA
Filing Date :NA

(71)**Name of Applicant :**
1)KONINKLIJKE PHILIPS ELECTRONICS N.V.
Address of Applicant :GROENEWOUDSEWEG 1 EINDHOVEN 5621 BA NETHERLANDS
(72)**Name of Inventor :**
1)QU Jin
2)PETKOVIC Milan
3)WANG Changjie
4)ASIM Muhammad

(57) Abstract :
A system is disclosed for providing interoperability between a plurality of data protection systems. The system includes an ontology (3) configured to store definitions (12) of concepts (4) relating to interface elements of at least two different data protection systems including a first data protection system (1) and a second data protection system (2); and a mapping generator (5) configured to generate a mapping between at least one interface element of the first data protection system (1) and at least one interface element of the second data protection system (2) based on the ontology (3). The system comprises a message converter (16) configured to receive a message generated by the first data protection system (1) convert the message based on the mapping to obtain a converted message and transmit the converted message to the second data protection system (2).

No. of Pages : 19 No. of Claims : 15

(12) PATENT APPLICATION PUBLICATION
(19) INDIA
(22) Date of filing of Application :21/12/2012
(21) Application No.10648/CHENP/2012 A
(43) Publication Date : 19/12/2014

(54) Title of the invention : SYSTEM AND METHOD FOR CONFLICT RESOLUTION TO SUPPORT SIMULTANEOUS MONITORING OF MULTIPLE SUBSYSTEMS

(51) International classification :G05B19/406,G05B19/418
(31) Priority Document No :12/797,472
(32) Priority Date :09/06/2010
(33) Name of priority country :U.S.A.
(86) International Application No :PCT/US2011/038856
Filing Date :02/06/2011
(87) International Publication No :WO/2011/156196
(61) Patent of Addition to Application Number :NA
Filing Date :NA
(62) Divisional to Application Number :NA
Filing Date :NA

(71)**Name of Applicant :**
1)HONEYWELL INTERNATIONAL INC.
Address of Applicant :Patent Services M/S AB/2B 101 Columbia Road P.O. Box 2245 Morristown New Jersey 07962-2245 U.S.A.
(72)**Name of Inventor :**
1)CHINMAYA KAR
2)VANKATARAMANA BANTWAL KINL
3)VEDIKA AGRAWAL
4)MEENAKSHI SUNDERAM

(57) Abstract :
A system includes a plurality of sensors (105-140) configured to measure one or more characteristics of a gearbox. The system also includes a subsystem interaction module device (100, 400), which includes at least one interface (160, 412, 470) configured to receive input signals (414-422) associated with multiple components of a system. The subsystem interaction module device also includes at least one processing unit (150, 430) configured to identify a potential fault in one or more of the components using the input signals and to provide an indicator identifying the potential fault. The at least one processing unit is configured to identify the potential fault by: identifying conflicting frequencies that are associated with different faults in the components of the system; and determining a confidence level associated with the potential fault based on the conflicting frequencies.

No. of Pages : 39 No. of Claims : 10

(12) PATENT APPLICATION PUBLICATION
(19) INDIA
(22) Date of filing of Application :17/12/2013
(21) Application No.10076/CHENP/2013 A
(43) Publication Date : 19/12/2014

(54) Title of the invention : CONCURRENTLY UPLOADING MULTIMEDIA OBJECTS AND ASSOCIATING METADATA WITH THE MULTIMEDIA OBJECTS

(51) International classification :G06F15/16,G06F9/44
(31) Priority Document No :13/168076
(32) Priority Date :24/06/2011
(33) Name of priority country :U.S.A.
(86) International Application No :PCT/US2012/040973
Filing Date :06/06/2012
(87) International Publication No :WO 2012/177390
(61) Patent of Addition to Application Number :NA
Filing Date :NA
(62) Divisional to Application Number :NA
Filing Date :NA

(71)**Name of Applicant :**
1)FACEBOOK INC.
Address of Applicant :1601 Willow Road Menlo Park CA 94025 U.S.A.
(72)**Name of Inventor :**
1)TSENG Erick

(57) Abstract :
In one embodiment accessing a set of multimedia objects stored on a first computing device; initiating upload of the set of multimedia objects to a second computing device; and while the set of multimedia objects is being uploaded to the second computing device receiving metadata entered by a user and associating metadata with each of one or more multimedia objects from the set of multimedia objects.

No. of Pages : 24 No. of Claims : 20

(12) PATENT APPLICATION PUBLICATION
(19) INDIA
(22) Date of filing of Application :24/12/2012
(21) Application No.10700/CHENP/2012 A
(43) Publication Date : 19/12/2014

(54) Title of the invention : AUTOFOCUS BASED ON DIFFERENTIAL MEASUREMENTS

(51) International classification :G02B21/24
(31) Priority Document No :10305676.8
(32) Priority Date :24/06/2010
(33) Name of priority country :EPO
(86) International Application No :PCT/IB2011/052641
Filing Date :17/06/2011
(87) International Publication No :WO/2011/161594
(61) Patent of Addition to Application Number :NA
Filing Date :NA
(62) Divisional to Application Number :NA
Filing Date :NA

(71)**Name of Applicant :**
1)KONINKLIJKE PHILIPS ELECTRONICS N.V.
Address of Applicant :GROENEWOUDSEWEG 1 EINDHOVEN 5621 BA NETHERLANDS
(72)**Name of Inventor :**
1)HULSKEN Bas

(57) Abstract :
The present invention relates to the field of digital pathology and in particular to whole slide scanners. A tilted autofocus image sensor images an oblique cross-section of the slide. For focusing multiple sequential overlapping images which have been taken by the tilted sensor are compared. The axial position of the tissue layer can be determined from the polar error signal resulting from this differential measurement.

No. of Pages : 28 No. of Claims : 15

(12) PATENT APPLICATION PUBLICATION
(19) INDIA
(22) Date of filing of Application :24/12/2012
(21) Application No.10704/CHENP/2012 A
(43) Publication Date : 19/12/2014

(54) Title of the invention : METHOD FOR PRODUCING A VIRTUAL OUTPUT IMAGE FROM DATA OBTAINED BY AN ARRAY OF IMAGE CAPTURING DEVICES SYSTEM FOR CONSTRUCTING A VIRTUAL OUTPUT IMAGE FROM DATA OBTAINED BY AN ARRAY OF IMAGE CAPTURING DEVICES THE SYSTEM COMPRISING AN ARRAY OF IMAGE CAPTURING DEVICES

(51) International classification :H04N5/232,H04N5/247
(31) Priority Document No :10167628.6
(32) Priority Date :29/06/2010
(33) Name of priority country :EPO
(86) International Application No :PCT/IB2011/052677
Filing Date :20/06/2011
(87) International Publication No :WO/2012/001568
(61) Patent of Addition to Application Number :NA
Filing Date :NA
(62) Divisional to Application Number :NA
Filing Date :NA

(71)**Name of Applicant :**
1)KONINKLIJKE PHILIPS ELECTRONICS N.V.
Address of Applicant :GROENEWOUDSEWEG 1 EINDHOVEN 5621 BA NETHERLANDS
(72)**Name of Inventor :**
1)SCHMEITZ Harold Agnes Wilhelmus
2)DE BRUIJN Frederik Jan

(57) Abstract :
In a method and system for providing virtual output images from an array of image capturing devices image data (Ii(s t) I2(s t)) is taken from the devices (Ci C2). This image data is processed by convolving the image data with a function e.g. the path (S) and thereafter deconvolving them either after or before summation (SUM) with an inverse point spread function (IPSF) or a filter (HP) equivalent thereto to produce all- focus image data (I0(s t)).

No. of Pages : 79 No. of Claims : 26

(12) PATENT APPLICATION PUBLICATION
(19) INDIA
(22) Date of filing of Application :24/12/2012
(21) Application No.10705/CHENP/2012 A
(43) Publication Date : 19/12/2014

(54) Title of the invention : EMERGENCY PEDIATRIC ECG LEAD SET WITH INTEGRATED INSTRUCTIONS

(51) International classification :A61B5/0408,A61N1/04,G01B3/10
(31) Priority Document No :61/359665
(32) Priority Date :29/06/2010
(33) Name of priority country :U.S.A.
(86) International Application No :PCT/IB2011/052429
Filing Date :02/06/2011
(87) International Publication No :WO/2012/001553
(61) Patent of Addition to Application Number :NA
Filing Date :NA
(62) Divisional to Application Number :NA
Filing Date :NA

(71)**Name of Applicant :**
1)KONINKLIJKE PHILIPS ELECTRONICS N.V.
Address of Applicant :GROENEWOUDSEWEG 1 EINDHOVEN 5621 BA NETHERLANDS
(72)**Name of Inventor :**
1)FREEMAN Curtis

(57) Abstract :
A cardiac electrotherapy device is described having an electrode lead set (100) and an instruction placard (140) having a set of medical guidance instructions (210) integrated with the electrode lead wire (160). The medical guidance instructions are printed on an elongated readable surface which is attached along its long edge to the electrode lead wire. The invention is particularly useful during cardiac emergencies involving pediatric or infant patients whose medical dosage limits may be closely correlated with patient length.

No. of Pages : 20 No. of Claims : 20

(12) PATENT APPLICATION PUBLICATION
(19) INDIA
(22) Date of filing of Application :24/12/2012
(21) Application No.10707/CHENP/2012 A
(43) Publication Date : 19/12/2014

(54) Title of the invention : SYNTHESIS AND USE OF IRON OLEATE

(51) International classification :C01G49/00,B82Y30/00,C01G49/08
(31) Priority Document No :10167687.2
(32) Priority Date :29/06/2010
(33) Name of priority country :EPO
(86) International Application No :PCT/IB2011/052708
Filing Date :21/06/2011
(87) International Publication No :WO/2012/001577
(61) Patent of Addition to Application Number :NA
Filing Date :NA
(62) Divisional to Application Number :NA
Filing Date :NA

(71)**Name of Applicant :**
1)KONINKLIJKE PHILIPS ELECTRONICS N.V.
Address of Applicant :GROENEWOUDSEWEG 1 EINDHOVEN 5621 BA NETHERLANDS
(72)**Name of Inventor :**
1)BURDINSKI Dirk
2)BOHLENDER Carmen

(57) Abstract :
The present invention relates to a method of forming an iron oleate complex comprising the steps of: (a) dissolving an oleate in a low-order alcohol solvent at a temperature of about 35°C to 65°C; (b) adding a non-polar solvent to the solution of step (a); (c) adding an iron salt dissolved in a low-order alcohol to the solution of step (b); (d) agitating the solution of step (c) at a temperature of about 50°C for at least 5 min; (e) cooling the reaction mixture of step (d) to a temperature of about 15°C to 30°C; (f) optionally filtering the reaction mixture of step (e); (g) separating the non-polar solvent phase from the low-order alcohol phase; (h) washing and drying the non-polar solvent phase;

No. of Pages : 45 No. of Claims : 15

(12) PATENT APPLICATION PUBLICATION
(19) INDIA
(22) Date of filing of Application :24/12/2012
(21) Application No.10708/CHENP/2012 A
(43) Publication Date : 19/12/2014

(54) Title of the invention : SYNTHESIS OF HIGH-PERFORMANCE IRON OXIDE PARTICLE TRACERS FOR MAGNETIC PARTICLE IMAGING (MPI)

(51) International classification :A61K49/18,C01G49/08,C09C1/24
(31) Priority Document No :10167693.0
(32) Priority Date :29/06/2010
(33) Name of priority country :EPO
(86) International Application No :PCT/IB2011/052712
Filing Date :21/06/2011
(87) International Publication No :WO/2012/001579
(61) Patent of Addition to Application Number :NA
Filing Date :NA
(62) Divisional to Application Number :NA
Filing Date :NA

(71)**Name of Applicant :**
1)KONINKLIJKE PHILIPS ELECTRONICS N.V.
Address of Applicant :GROENEWOUDSEWEG 1 EINDHOVEN 5621 BA NETHERLANDS
(72)**Name of Inventor :**
1)BURDINSKI Dirk
2)BOHLENDER Carmen
3)HAEX Nicole Petronella Martien

(57) Abstract :
The present invention relates to a method of forming iron oxide nanoparticles comprising the steps of (a) suspending iron oxide/hydroxide and oleic acid or a derivative thereof in a primary organic solvent; (b) increasing the temperature of the suspension by a defined rate up to a maximum of 340°C to 500°C; (c) aging the suspension at the maximum temperature of step (b) for about 0.5 to 6 h; (d) cooling the suspension; (e) adding a secondary organic solvent; (f) precipitating nanoparticles by adding a non- solvent and removing excess solvent; (g) dispersing said nanoparticles in said secondary organic solvent; (h) mixing the dispersion of step (g) with a solution of a polymer; and (i) optionally removing said secondary organic solvent.

No. of Pages : 40 No. of Claims : 15

(12) PATENT APPLICATION PUBLICATION
(19) INDIA
(22) Date of filing of Application :24/12/2012
(21) Application No.10709/CHENP/2012 A
(43) Publication Date : 19/12/2014

(54) Title of the invention : COIL ARRANGEMENT

(51) International classification :G01R33/385
(31) Priority Document No :61/359884
(32) Priority Date :30/06/2010
(33) Name of priority country :U.S.A.
(86) International Application No :PCT/IB2011/052786
Filing Date :24/06/2011
(87) International Publication No :WO/2012/001598
(61) Patent of Addition to Application Number :NA
Filing Date :NA
(62) Divisional to Application Number :NA
Filing Date :NA

(71)**Name of Applicant :**
1)KONINKLIJKE PHILIPS ELECTRONICS N.V.
Address of Applicant :GROENEWOUDSEWEG 1 EINDHOVEN 5621 BA NETHERLANDS
(72)**Name of Inventor :**
1)LAST Sjoerd A. J.
2)MALYCKY Steve

(57) Abstract :
The invention relates to a Magnetic resonance coil arrangement (202) comprising electrical conductors for generating a magnetic field wherein the electrical conductors are electrically isolated from each other by an electrical insulator (204) wherein the insulator (204) comprises a nitride or aluminum oxide as electrical insulating material.

No. of Pages : 15 No. of Claims : 12

(12) PATENT APPLICATION PUBLICATION
(19) INDIA
(22) Date of filing of Application :24/12/2012
(21) Application No.10710/CHENP/2012 A
(43) Publication Date : 19/12/2014

(54) Title of the invention : ZOOMING A DISPLAYED IMAGE

(51) International classification :G06T1/00
(31) Priority Document No :61/359861
(32) Priority Date :30/06/2010
(33) Name of priority country :U.S.A.
(86) International Application No :PCT/IB2011/052836
Filing Date :28/06/2011
(87) International Publication No :WO/2012/001625
(61) Patent of Addition to Application Number :NA
Filing Date :NA
(62) Divisional to Application Number :NA
Filing Date :NA

(71)**Name of Applicant :**
1)KONINKLIJKE PHILIPS ELECTRONICS N.V.
Address of Applicant :GROENEWOUDSEWEG 1 EINDHOVEN 5621 BA NETHERLANDS
(72)**Name of Inventor :**
1)CRISTESCU Sorin Alexandru
2)DULISKOVICH Tibor
3)GERAATS Jacobus Sigbertus Marie
4)PEETERS Harold Johannes Antonius
5)POST Wijnand

(57) Abstract :
A system for displaying an image in a viewport is disclosed. A zoom subsystem (6) is arranged for gradually zooming the image (401) towards a scale factor at which the image just fits within the viewport (302) wherein the zoom (6) subsystem is arranged for keeping a fixed point (403) fixed within the viewport (302) wherein the fixed point (403) depends on a pan/zoom parameter (7) of the image (401) at the time zooming starts wherein the fixed point (403) is a point of the image (401) which is being displayed in the viewport (302) at the time zooming starts and wherein the image (401) is capable of being zoomed to a zoom level at which the image just fits within the viewport (302) while the fixed point (403) is kept fixed with respect to the viewport (302).

No. of Pages : 24 No. of Claims : 15

(12) PATENT APPLICATION PUBLICATION
(19) INDIA
(22) Date of filing of Application :24/12/2012
(21) Application No.10711/CHENP/2012 A
(43) Publication Date : 19/12/2014

(54) Title of the invention : ZOOMING-IN A DISPLAYED IMAGE

(51) International classification :G06T1/00
(31) Priority Document No :61/359870
(32) Priority Date :30/06/2010
(33) Name of priority country :U.S.A.
(86) International Application No :PCT/IB2011/052857
Filing Date :29/06/2011
(87) International Publication No :WO/2012/001637
(61) Patent of Addition to Application Number :NA
Filing Date :NA
(62) Divisional to Application Number :NA
Filing Date :NA

(71)**Name of Applicant :**
1)KONINKLIJKE PHILIPS ELECTRONICS N.V.
Address of Applicant :GROENEWOUDSEWEG 1 EINDHOVEN 5621 BA NETHERLANDS
(72)**Name of Inventor :**
1)CRISTESCU Sorin Alexandru
2)DULISKOVICH Tibor
3)GERAATS Jacobus Sigbertus Marie
4)PEETERS Harold Johannes Antonius
5)POST Wijnand

(57) Abstract :
A system for displaying an image is disclosed. A user input subsystem (1) is arranged for enabling a user to indicate at least one point of a region of interest of an image (5). A zoom subsystem (2) is arranged for performing a zoom- in operation by filling a viewport with successively smaller portions of the image (5) wherein the successively smaller portions are selected such that the region of interest is shown at a decreasing distance from a center of the viewport. The user input subsystem (1) is arranged for enabling the user to control the zoom- in operation by indicating after the viewport has been filled with one or more of the successively smaller portions of the image whether further zooming is desired for the already indicated at least one point of a region of interest.

No. of Pages : 21 No. of Claims : 15

(12) PATENT APPLICATION PUBLICATION
(19) INDIA
(22) Date of filing of Application :24/12/2012
(21) Application No.10712/CHENP/2012 A
(43) Publication Date : 19/12/2014

(54) Title of the invention : DIMMABLE LIGHTING DEVICE

(51) International classification :H05B33/08
(31) Priority Document No :10167956.1
(32) Priority Date :30/06/2010
(33) Name of priority country :EPO
(86) International Application No :PCT/IB2011/052538
Filing Date :10/06/2011
(87) International Publication No :WO/2012/001561
(61) Patent of Addition to Application Number :NA
Filing Date :NA
(62) Divisional to Application Number :NA
Filing Date :NA

(71)**Name of Applicant :**
1)KONINKLIJKE PHILIPS ELECTRONICS N.V.
Address of Applicant :GROENEWOUDSEWEG 1 EINDHOVEN 5621 BA NETHERLANDS
(72)**Name of Inventor :**
1)RADERMACHER Harald

(57) Abstract :
The invention relates to lighting devices (100) for producing ultimate light comprising first light of a relatively warm color and second light of a relatively cool color. The lighting devices (100) comprise first and second circuits (1 2) for producing the first and second light third circuits (3) for reaching a temperature per intensity state of the ultimate light and fourth circuits (4) thermally coupled to the third circuits (3) and comprising temperature-dependent circuits for giving the ultimate light a for example relatively warm color at lower intensity states and for giving the ultimate light a for example relatively cool color at higher intensity states.

No. of Pages : 20 No. of Claims : 15

(12) PATENT APPLICATION PUBLICATION
(19) INDIA
(22) Date of filing of Application :24/12/2012
(21) Application No.10713/CHENP/2012 A
(43) Publication Date : 19/12/2014

(54) Title of the invention : AUTOSTEREOSCOPIC DISPLAY DEVICE

(51) International classification :G02B27/22,H04N13/00
(31) Priority Document No :10167812.6
(32) Priority Date :30/06/2010
(33) Name of priority country :EPO
(86) International Application No :PCT/IB2011/052782
Filing Date :24/06/2011
(87) International Publication No :WO/2012/001597
(61) Patent of Addition to Application Number :NA
Filing Date :NA
(62) Divisional to Application Number :NA
Filing Date :NA

(71)**Name of Applicant :**
1)KONINKLIJKE PHILIPS ELECTRONICS N.V.
Address of Applicant :GROENEWOUDSEWEG 1 EINDHOVEN 5621 BA NETHERLANDS
(72)**Name of Inventor :**
1)WILLEMSEN Oscar Hendrikus
2)PIJLMAN Fetze
3)DE ZWART Siebe Tjerk

(57) Abstract :
A switchable autostereoscopic display device comprises a first LED display panel an array of non-switchable lens elements and a second LED display panel. This arrangement avoids the need for a switchable lens array to implement a switchable 2D/3D display. The first LED display panel can simply be turned off so that the lens array does not play a role in generating a 3D output. The second LED display panel then produces the desired 2D image.

No. of Pages : 18 No. of Claims : 13

(12) PATENT APPLICATION PUBLICATION
(19) INDIA
(22) Date of filing of Application :07/12/2012
(21) Application No.10475/CHENP/2012 A
(43) Publication Date : 19/12/2014

(54) Title of the invention : LOW DOSE COMPUTED TOMOGRAPHY (CT)

(51) International classification :G06T5/00,G06T11/00
(31) Priority Document No :61/356817
(32) Priority Date :21/06/2010
(33) Name of priority country :U.S.A.
(86) International Application No :PCT/IB2011/051846
Filing Date :27/04/2011
(87) International Publication No :WO 2011/161557
(61) Patent of Addition to Application Number :NA
Filing Date :NA
(62) Divisional to Application Number :NA
Filing Date :NA

(71)**Name of Applicant :**
1)KONINKLIJKE PHILIPS ELECTRONICS N.V.
Address of Applicant :GROENEWOUDSEWEG 1 EINDHOVEN 5621 BA NETHERLANDS
(72)**Name of Inventor :**
1)SHECHTER Gilad

(57) Abstract :
A method includes de-noising projection data from a lower dose scan in the projection domain reconstructing the de-noised projection data to generate volumetric image data and de- noising the volumetric image data in the image domain. A system includes a projection domain processor (116) that de-noises projection data from a lower dose scan a reconstructor (118) that reconstructs the de-noised projection data and generates image data and an image domain processor (120) that de-noises the image data such that a noise level of the de-noise image data is substantially the same as an estimated image data noise level of image data for a higher dose scan.

No. of Pages : 18 No. of Claims : 20

(12) PATENT APPLICATION PUBLICATION
(19) INDIA
(22) Date of filing of Application :07/12/2012

(21) Application No.10476/CHENP/2012 A
(43) Publication Date : 19/12/2014

(54) Title of the invention : LOW DOSE CT

(51) International classification :G06T11/00
(31) Priority Document No :61/356820
(32) Priority Date :21/06/2010
(33) Name of priority country :U.S.A.
(86) International Application No :PCT/IB2011/051850
Filing Date :27/04/2011
(87) International Publication No :WO/2011/161558
(61) Patent of Addition to Application Number :NA
Filing Date :NA
(62) Divisional to Application Number :NA
Filing Date :NA

(71)**Name of Applicant :**
1)KONINKLIJKE PHILIPS ELECTRONICS N.V.
Address of Applicant :GROENEWOUDSEWEG 1 EINDHOVEN 5621 BA NETHERLANDS
(72)**Name of Inventor :**
1)CARMI Raz
2)LIVNE Amir

(57) Abstract :
A method includes generating higher resolution image data based on undersampled higher resolution projection data and incomplete lower resolution projection data. The undersampled higher resolution projection data and the incomplete lower resolution projection data are acquired during different acquisition intervals of the same scan. A system includes a radiation source configured to alternately modulate emission radiation flux between higher and lower fluxes during different integration periods of a scan a detector array configured to alternately switch detector pixel multiplexing between higher and lower resolutions in coordination with modulation of the fluxes and a reconstructor configured to reconstruct higher resolution image data based on projection data corresponding to undersampled higher resolution projection data and incomplete lower resolution projection data.

No. of Pages : 21 No. of Claims : 20

(12) PATENT APPLICATION PUBLICATION
(19) INDIA
(22) Date of filing of Application :17/12/2012
(21) Application No.10477/CHENP/2012 A
(43) Publication Date : 19/12/2014

(54) Title of the invention : SUPPORTIVE EXERCISE DEVICE

(51) International classification :A63B23/02,A63B21/02,A63B23/04
(31) Priority Document No :61/345,585
(32) Priority Date :17/05/2010
(33) Name of priority country:U.S.A.
(86) International Application No :PCT/US2011/036611
Filing Date :16/05/2011
(87) International Publication No :WO 2011/146373
(61) Patent of Addition to Application Number :NA
Filing Date :NA
(62) Divisional to Application Number :NA
Filing Date :NA

(71)**Name of Applicant :**
1)RAVIKUMAR SUNDARAM
Address of Applicant :265 Hardscrabble Road Briar Cliff Manor NY 10510 United States of America
(72)**Name of Inventor :**
1)RAVIKUMAR SUNDARAM
2)ALWARD Allan

(57) Abstract :
Supportive exercise devices assist a user in achieving and maintaining any of a variety of postures prescribed by various exercise practices including yoga disciplines and are particularly suited for training by assisting and guiding a user in proper technique. Such supportive exercise devices are adapted and configured to assist a user in achieving and maintaining an exercise posture and include a seat adapted and configured to be placed under a user a support frame extending upwardly from the seat a backrest carried by the support frame and shoulder straps carried by the support frame adapted and configured for maintaining the users shoulders in a predetermined position.

No. of Pages : 65 No. of Claims : 4

(12) PATENT APPLICATION PUBLICATION
(19) INDIA
(22) Date of filing of Application :10/01/2013
(21) Application No.154/CHE/2013 A
(43) Publication Date : 19/12/2014

(54) Title of the invention : ISOLATING AND IDENTIFYING THE ACTIVE CONSTITUENT OF ETHANOLIC EXTRACT OF AERVA LANATA, BEING A CONSTITUENT FOR THE TREATMENT OF CARDIAC NECROSIS

(51) International classification :A61K
(31) Priority Document No :NA
(32) Priority Date :NA
(33) Name of priority country :NA
(86) International Application No :NA
Filing Date :NA
(87) International Publication No : NA
(61) Patent of Addition to Application Number :NA
Filing Date :NA
(62) Divisional to Application Number :NA
Filing Date :NA

(71)**Name of Applicant :**
1)DR. V.K. GOPALAKRISHNAN
Address of Applicant :DEPARTMENT OF BIOCHEMISTRY KARPAGAM UNIVERSITY COIMBATORE - 21 Tamil Nadu India
2)P. RAGAVEBDRAN
3)KARPAGAM UNIVERSITY
(72)**Name of Inventor :**
1)DR. V.K. GOPALAKRISHNAN
2)P. RAGAVENDRAN

(57) Abstract :
A process for isolating and identifying the active constituent of ethanolic extract f Aerva lanata, being a constituent for the treatment of cardiac necrosis, comprising the steps, in combination, of subjecting samples of the said extract to High Performance Thin Layer Chromatography (HPTLC) for indicating the flavonoid, polyphenol, glycoside, tannin and terpenoid profiles; Column chromatography and Thin layer column chromatography for the separation of active constituents; Fourier transforms infrared (FTIR) spectroscopy for analysis of the phytoconstituents5 functional groups for identifying the functional groups; identification of the structure of the active constituents by Nuclear Magnetic Resonance (NMR) spectroscopy: two dimensional nuclear magnetic resonance (2D NMR) spectroscopy for resolving and identifying the nature of chemical sites in the sample; HSQC (Heteronuclear Single Quantum Coherence) for the detection of bond couplings; H - H COSY (Homonuclear Correlation Spectroscopy) for revealing correlations between coupled protons; HMBC (Heteronuclear Multiple bond Coherence) also for the detection of bond couplings; the overall analysis indicating a structure of the active constituent of the said extract with a molecular formula = C12H24O2, molecular weight equal to 200.18 grams/mole, compound name: dodecanoic acid.

No. of Pages : 11 No. of Claims : 3

(12) PATENT APPLICATION PUBLICATION
(19) INDIA
(22) Date of filing of Application :21/12/2012
(21) Application No.10692/CHENP/2012 A
(43) Publication Date : 19/12/2014

(54) Title of the invention : NOVEL INDAZOLE DERIVATIVE OR SALT THEREOF MANUFACTURING INTERMEDIATE THEREFOR ANTIOXIDANT USING SAME AND USE FOR AN INDAZOLE DERIVATIVE OR SALT THEREOF

(51) International classification :A61K31/4439,A61P1/04,A61P1/16
(31) Priority Document No :2010121822
(32) Priority Date :27/05/2010
(33) Name of priority country :Japan
(86) International Application No :PCT/JP2011/062071
Filing Date :26/05/2011
(87) International Publication No :WO 2011/149011
(61) Patent of Addition to Application Number :NA
Filing Date :NA
(62) Divisional to Application Number :NA
Filing Date :NA

(71)**Name of Applicant :**
1)UBE INDUSTRIES LTD.
Address of Applicant :1978 96 Oaza Kogushi Ube shi Yamaguchi 7558633 Japan
(72)**Name of Inventor :**
1)HAGIHARA Masahiko
2)KOMORI Ken ichi
3)SUNAMOTO Hidetoshi
4)NISHIDA Hiroshi
5)TSUZAKI Yasunori
6)TAKAMA Akira
7)KIDO Kazutaka
8)FUJIMOTO Tomokazu
9)MATSUGI Takeshi

(57) Abstract :
Disclosed are: the compound represented by formula (1) or a salt thereof; and a manufacturing intermediate therefor. Said compound exhibits excellent antioxidant activity in a microsomal lipid peroxidation measurement system using rat liver microsomes. Said compound or a salt thereof is useful as an antioxidant. Also disclosed is a use for the compound represented by formula (1) or a pharmacologically permitted salt thereof for manufacturing an antioxidant.

No. of Pages : 26 No. of Claims : 4

(12) PATENT APPLICATION PUBLICATION
(19) INDIA
(22) Date of filing of Application :24/12/2012
(21) Application No.10698/CHENP/2012 A
(43) Publication Date : 19/12/2014

(54) Title of the invention : METHOD AND DEVICE FOR DETECTING A CRITICAL HEMODYNAMIC EVENT OF A PATIENT

(51) International classification :G06F19/00,A61B5/0285,G06F17/00
(31) Priority Document No :10167124.6
(32) Priority Date :24/06/2010
(33) Name of priority country :EPO
(86) International Application No :PCT/IB2011/052647
Filing Date :17/06/2011
(87) International Publication No :WO 2011/161599
(61) Patent of Addition to Application Number :NA
Filing Date :NA
(62) Divisional to Application Number :NA
Filing Date :NA

(71)**Name of Applicant :**
1)KONINKLIJKE PHILIPS ELECTRONICS N.V.
Address of Applicant :GROENEWOUDSEWEG 1 EINDHOVEN 5621 BA NETHERLANDS
(72)**Name of Inventor :**
1)MUHLSTEFF Jens
2)MORREN Geert Guy Georges
3)MEYER Christian

(57) Abstract :
The invention relates to a method and a device for detecting a critical physiological state of a patient especially for detecting a critical hemodynamic event. A set of values of physiological parameters is measured including the heart rate and the pulse arrival time. On the basis of these measurements a risk assessment is performed including the allocation of a representation of the measured set of values as a vector in a vector space to a risk level representing the risk of the occurance of a critical hemodynamic event.

No. of Pages : 18 No. of Claims : 15

(12) PATENT APPLICATION PUBLICATION
(19) INDIA
(22) Date of filing of Application :24/12/2012
(21) Application No.10699/CHENP/2012 A
(43) Publication Date : 19/12/2014

(54) Title of the invention : DYNAMIC CONTRAST ENHANCED MR IMAGING WITH COMPRESSED SENSING RECONSTRUCTION

(51) International classification	:G01N24/08,G01R33/48,G01R33/54
(31) Priority Document No	:10167157.6
(32) Priority Date	:24/06/2010
(33) Name of priority country	:EPO
(86) International Application No	:PCT/IB2011/052364
Filing Date	:30/05/2011
(87) International Publication No	:WO 2011/161566
(61) Patent of Addition to Application Number	:NA
Filing Date	:NA
(62) Divisional to Application Number	:NA
Filing Date	:NA

(71)**Name of Applicant :**
1)KONINKLIJKE PHILIPS ELECTRONICS N.V.
Address of Applicant :GROENEWOUDSEWEG 1 EINDHOVEN 5621 BA NETHERLANDS
(72)**Name of Inventor :**
1)BOERNERT Peter
2)DONEVA Mariya Ivanova

(57) Abstract :
The present invention relates to a method of performing dynamic contrast enhanced magnetic resonance imaging of an object (10) with signal separation for water and fat the method comprising acquiring magnetic resonance datasets in the k-space using Dixon acquisition in a chemical shift encoding space and dynamic time resolution in a dynamic time space wherein the dataset acquisition is performed employing undersampling wherein the method further comprises: applying a compressed sensing reconstruction technique in the k-space the chemical shift encoding space and the dynamic time space said compressed sensing reconstruction resulting in reconstructed datasets - performing Dixon reconstruction on the reconstructed datasets and dynamic contrast analysis on the Dixon reconstructed datasets.

No. of Pages : 19 No. of Claims : 13

(12) PATENT APPLICATION PUBLICATION
(19) INDIA
(22) Date of filing of Application :13/03/2009
(21) Application No.1463/CHENP/2009 A
(43) Publication Date : 19/12/2014

(54) Title of the invention : INJECTION MOLDED MULTIPLE LAYER GLAZINGS

(51) International classification :b29c45/14
(31) Priority Document No :11/466,765
(32) Priority Date :23/08/2006
(33) Name of priority country :U.S.A.
(86) International Application No :PCT/US07/76462
Filing Date :22/08/2007
(87) International Publication No :WO 2008/024805 A1
(61) Patent of Addition to Application Number :NA
Filing Date :NA
(62) Divisional to Application Number :NA
Filing Date :NA

(71)**Name of Applicant :**
1)SOLUTIA INCORPORATED
Address of Applicant :575 MARYVILLE CENTRE DRIVE, ST. LOUIS, MISSOURI 63141 U.S.A.
(72)**Name of Inventor :**
1)KARAGIANNIS, ARISTOTELIS
2)KORAN, FRANCOIS
3)YUAN, PING

(57) Abstract :
The present invention is clirecled lo llic uno ol Injocllon molding (o lorm polymeric inlerlayers (16) direclly between (wo rigid suhslralcs (12, 14) dial arc positioned so that allcr injeclion of die melted polynxnic, material and aller cooling, (he resulting multiple layer panel lunclloMN as a saiiMy panel dud cim be used In any appropriate conventional safety gln/lng application. Methods of (he prescnl invention utilize a relatively low molecular weigid polymer, nuiltlple injection points, mold compression, and/or a healed substrate in order lo IticiliUite the injection of polymer into the relatively narrow space between glazing substrates that is typically found in safety glazings.

No. of Pages : 47 No. of Claims : 20

(12) PATENT APPLICATION PUBLICATION
(19) INDIA
(22) Date of filing of Application :28/02/2013
(21) Application No.1629/CHENP/2013 A
(43) Publication Date : 19/12/2014

(54) Title of the invention : AMPHIPHILE FOR SOLUBILIZATION OF WATER SOLUBLE ACTIVE INGREDIENTS

(51) International classification :C08G18/48,C08G65/08,C08G65/02
(31) Priority Document No :10174797.0
(32) Priority Date :01/09/2010
(33) Name of priority country:EPO
(86) International Application No :PCT/IB2011/053818
Filing Date :31/08/2011
(87) International Publication No :WO 2012/029038
(61) Patent of Addition to Application Number :NA
Filing Date :NA
(62) Divisional to Application Number :NA
Filing Date :NA

(71)**Name of Applicant :**
1)BASF SE
Address of Applicant :67056 Ludwigshafen Germany
2)BASF (CHINA) COMPANY LIMITED
(72)**Name of Inventor :**
1)CRISTADORO Anna
2)TRK Holger
3)ISHAQUE Michael
4)AL HELLANI Rabie

(57) Abstract :
An amphiphile of the formula (I) preparation method and use thereof are provided wherein R: each is independently selected from H; C C alkyl etc; R: each is independently selected from C C alkylene wherein at least 50 mol% of C alkylene is present; n: 1 to 200; m: 1 to 6; q: 0 to 50; R: a nonpolar or polar polymer; R: a nonpolar or polar dendron. The amphiphile can be used for solubilization of sparingly water soluble active ingredients in an agrochemical formulation.

No. of Pages : 32 No. of Claims : 15

(12) PATENT APPLICATION PUBLICATION
(19) INDIA
(22) Date of filing of Application :26/12/2013
(21) Application No.10304/CHENP/2013 A
(43) Publication Date : 19/12/2014

(54) Title of the invention : NEIGHBOR CELL LOCATION AVERAGING

(51) International classification :H04W64/00
(31) Priority Document No :13/153113
(32) Priority Date :03/06/2011
(33) Name of priority country :U.S.A.
(86) International Application No :PCT/US2012/038089
Filing Date :16/05/2012
(87) International Publication No :WO 2012/166363
(61) Patent of Addition to Application Number :NA
Filing Date :NA
(62) Divisional to Application Number :NA
Filing Date :NA

(71)**Name of Applicant :**
1)APPLE INC.
Address of Applicant :1 Infinite Loop Cupertino CA 95014 2094 U.S.A.
(72)**Name of Inventor :**
1)MACGOUGAN Glenn Donald
2)MARTI Lukas M.
3)MAYOR Robert
4)HUANG Ronald K.
5)DERE Jason
6)GROSMAN Yefim

(57) Abstract :
In some implementations a location of a mobile device can be determined by calculating an average of the locations of wireless signal transmitters that have transmitted signals received by the mobile device. In some implementations locations are weighted with coefficients and the average is a weighted average. In some implementations the locations of the wireless signal transmitters are determined based on identification information encoded in the wireless signals received by the mobile device. The identification information can include an identifier for a wireless signal transmitter. The identification information can include characteristics of the received wireless signal that can be used to identify wireless signal transmitters. In some implementations identification information from one signal can be combined with identification information from another signal to determine a location of a wireless transmitter.

No. of Pages : 25 No. of Claims : 22

(12) PATENT APPLICATION PUBLICATION
(19) INDIA
(22) Date of filing of Application :26/12/2013
(21) Application No.10305/CHENP/2013 A
(43) Publication Date : 19/12/2014

(54) Title of the invention : SYNCHRONIZATION OF SHADER OPERATION

(51) International classification :G06F9/54,G06F9/52
(31) Priority Document No :13/186236
(32) Priority Date :19/07/2011
(33) Name of priority country :U.S.A.
(86) International Application No :PCT/US2012/044008
Filing Date :25/06/2012
(87) International Publication No :WO 2013/012524
(61) Patent of Addition to Application Number :NA
Filing Date :NA
(62) Divisional to Application Number :NA
Filing Date :NA

(71)**Name of Applicant :**
1)QUALCOMM INCORPORATED
Address of Applicant :ATTN: International IP Administration 5775 Morehouse Drive San Diego California 92121 1714 U.S.A.
(72)**Name of Inventor :**
1)GRUBER Andrew

(57) Abstract :
The example techniques described in this disclosure may be directed to synchronization between producer shaders (16) and consumer shaders (24). For example a graphics processing unit (GPU) may execute a producer shader to produce graphics data. After the completion of the production of graphics data the producer shader may store a value indicative of the amount of produced graphics data (18). The GPU may execute one or more consumer shaders after the storage of the value indicative of the amount of produced graphics data to consume the produced graphics data.

No. of Pages : 42 No. of Claims : 41

(12) PATENT APPLICATION PUBLICATION
(19) INDIA
(22) Date of filing of Application :26/12/2013
(21) Application No.10307/CHENP/2013 A
(43) Publication Date : 19/12/2014

(54) Title of the invention : SYSTEM FOR VIDEOTAPING AND RECORDING A MUSICAL GROUP

(51) International classification :G10H7/00
(31) Priority Document No :13/169654
(32) Priority Date :27/06/2011
(33) Name of priority country :U.S.A.
(86) International Application No :PCT/US2012/044158
Filing Date :26/06/2012
(87) International Publication No :WO 2013/003323
(61) Patent of Addition to Application Number :NA
Filing Date :NA
(62) Divisional to Application Number :NA
Filing Date :NA

(71)**Name of Applicant :**
1)FIRST PRINCIPLES INC.
Address of Applicant :455 New Karner Road Albany NY 12205 U.S.A.
(72)**Name of Inventor :**
1)RANIERE Keith A.

(57) Abstract :
A system comprising: a plurality of lead computers; a plurality of player workstations; a plurality of audio receivers and transmitters for capturing audio signals and converting said audio signals to a transmittable form wherein at least one audio receiver and transmitter is associated with each player; a plurality of video receivers and transmitters for capturing images and converting said images to a transmittable form wherein at least one video receiver and transmitter is associated with each player; a storage device and a processor for receiving and processing signals from said audio and video receivers and transmitters and; an output device for outputting each audio and video receiver.

No. of Pages : 46 No. of Claims : 16

(12) PATENT APPLICATION PUBLICATION
(19) INDIA
(22) Date of filing of Application :03/05/2012
(21) Application No.1717/CHE/2012 A
(43) Publication Date : 19/12/2014

(54) Title of the invention : A METHOD AND SYSTEM FOR PROCESSING A TRANSACTION BY WAY OF AUCTION AND NEGOTIATION VIA INTERNET COMMUNICATION

(51) International classification :G06Q
(31) Priority Document No :NA
(32) Priority Date :NA
(33) Name of priority country :NA
(86) International Application No :NA
Filing Date :NA
(87) International Publication No : NA
(61) Patent of Addition to Application Number :NA
Filing Date :NA
(62) Divisional to Application Number :NA
Filing Date :NA

(71)**Name of Applicant :**
1)VINOD KUMAR MADAIAH
Address of Applicant :Flat No. 207 Janhavi Meadows Begur-Koppa Road Yelanahalli Village Begur Hobli Bangalore 560 068 Karnataka India
(72)**Name of Inventor :**
1)KRITARTH SURI
2)VINOD KUMAR MADAIAH

(57) Abstract :
The present invention relates to a method and a system for processing a transaction by way of auction and negotiation via Internet communication. In one embodiment this can be accomplished by receiving at least one request from at least one buyer, presenting a plurality of product attribute information along with the associated selling value set to the buyer based on the received request, receiving product attribute information selected by the buyer along with a preferred purchase value set by the buyer, inviting quotation to match the buyer™s preferred purchase value set from the plurality of authorized and participating sellers, sending offered value set based on the invited preferred purchase value set of the selected product to the buyer from the plurality of the sellers until the process is not closed, determining whether the offered value set is equal to or less than the preferred value set and notifying the participating sellers that the offered value matches the preferred purchase value and thereby closing the transaction.

No. of Pages : 33 No. of Claims : 8

(12) PATENT APPLICATION PUBLICATION
(19) INDIA
(22) Date of filing of Application :14/12/2012
(21) Application No.10453/CHENP/2012 A
(43) Publication Date : 19/12/2014

(54) Title of the invention : PRODUCTION SIMULATOR FOR SIMULATING A MATURE HYDROCARBON FIELD

(51) International classification :G01V1/00
(31) Priority Document No :12/816,940
(32) Priority Date :16/06/2010
(33) Name of priority country :U.S.A.
(86) International Application No :PCT/EP2011/059968
Filing Date :15/06/2011
(87) International Publication No : NA
(61) Patent of Addition to Application Number :NA
Filing Date :NA
(62) Divisional to Application Number :NA
Filing Date :NA

(71)**Name of Applicant :**
1)FOROIL
Address of Applicant :10 rue Lincoln F-75008 Paris France
(72)**Name of Inventor :**
1)OURY Jean-Marc
2)HEINTZ Bruno
3)DE SAINT GERMAIN Hugues

(57) Abstract :
A production simulator (2) for simulating a mature hydrocarbon field providing quantity produced (Qfktb) per phase per well per layer (or group of layers) and per time as a function of production parameters (PP) wherein said production simulator (2) matches history data (HD) of said mature hydrocarbon field and verifies a Vapnik condition.

No. of Pages : 47 No. of Claims : 25

(12) PATENT APPLICATION PUBLICATION
(19) INDIA
(22) Date of filing of Application :14/12/2012
(21) Application No.10454/CHENP/2012 A
(43) Publication Date : 19/12/2014

(54) Title of the invention : METHOD OF IMPROVING THE PRODUCTION OF A MATURE GAS OR OIL FIELD

(51) International classification :E21B43/30
(31) Priority Document No :12/816,915
(32) Priority Date :16/06/2010
(33) Name of priority country :U.S.A.
(86) International Application No :PCT/EP2011/059966
Filing Date :15/06/2011
(87) International Publication No : NA
(61) Patent of Addition to Application Number :NA
Filing Date :NA
(62) Divisional to Application Number :NA
Filing Date :NA

(71)**Name of Applicant :**
1)FOROIL
Address of Applicant :10 rue Lincoln F-75008 Paris France
(72)**Name of Inventor :**
1)OURY Jean-Marc
2)HEINTZ Bruno
3)DE SAINT GERMAIN Hugues
4)DAUDIN Rmi
5)DESJARDINS Beno®t

(57) Abstract :
A method of improving the production of a mature gas or oil field said field comprising a plurality of existing wells said method comprising: - providing a field simulator capable of predicting a production of said field in function of a given scenario a scenario being a set of data comprising production parameters of the existing wells and the case may be location and production parameters of one or more new wells - determining drainage areas of said existing wells using the field simulator - determining locations of candidate new wells such that drainage areas of said candidate new wells determined using the field simulator do not overlap with the drainage areas of the existing wells - optimizing the value of a gain ...

No. of Pages : 16 No. of Claims : 11

(12) PATENT APPLICATION PUBLICATION
(19) INDIA
(22) Date of filing of Application :12/12/2012
(21) Application No.10457/CHENP/2012 A
(43) Publication Date : 19/12/2014

(54) Title of the invention : TEMPERATURE SENSOR INTERFACE FOR WIRELESS AND WIRED CHARGING

(51) International classification :H02J7/02,H01M10/44
(31) Priority Document No :61/349,734
(32) Priority Date :28/05/2010
(33) Name of priority country :U.S.A.
(86) International Application No :PCT/US2011/038252
Filing Date :26/05/2011
(87) International Publication No :WO 2011/150287
(61) Patent of Addition to Application Number :NA
Filing Date :NA
(62) Divisional to Application Number :NA
Filing Date :NA

(71)**Name of Applicant :**
1)QUALCOMM INCORPORATED
Address of Applicant :5775 Morehouse Drive San Diego California 92121 U.S.A.
(72)**Name of Inventor :**
1)RAYMOND K. ROSIK
2)PENGFI LI
3)LINDA S. IRISH

(57) Abstract :
Exemplary embodiments are directed to an electronic device for enabling a temperature of a battery unit to be sensed with a wired power charger or a wireless power. A device may include a wireless power receiver and a wired charging module operably coupled to the wireless power receiver. The device may also include an interface configured to couple to a battery unit and for selectively enabling one of the wireless power receiver and the wired charging module to determine a temperature of the battery unit.

No. of Pages : 36 No. of Claims : 26

(12) PATENT APPLICATION PUBLICATION
(19) INDIA
(22) Date of filing of Application :12/12/2012
(21) Application No.10458/CHENP/2012 A
(43) Publication Date : 19/12/2014

(54) Title of the invention : SYSTEM AND METHOD TO EVALUATE A DATA VALUE AS AN INSTRUCTION

(51) International classification :G06F9/455,G06F9/30
(31) Priority Document No :12/785,551
(32) Priority Date :24/05/2010
(33) Name of priority country :U.S.A.
(86) International Application No :PCT/US2011/037537
Filing Date :23/05/2011
(87) International Publication No :WO 2011/149828
(61) Patent of Addition to Application Number :NA
Filing Date :NA
(62) Divisional to Application Number :NA
Filing Date :NA

(71)**Name of Applicant :**
1)QUALCOMM INCORPORATED
Address of Applicant :Attn: International IP Administration 5775 Morehouse Drive San Diego California 92121 U.S.A.
(72)**Name of Inventor :**
1)LUCIAN CODRESCU
2)ERICH J. PLONDKE
3)SURESH K. VENKUMAHANTI

(57) Abstract :
A system and method to evaluate a data value as an instruction is disclosed. For example, an apparatus configured to execute program code includes an execute unit configured to execute a first instruction associated with a location of a second instruction. The first instruction is identified by a program counter. The apparatus also includes a decode unit configured to receive the second instruction from the location and to decode the second instruction to generate a decoded second instruction without changing the program counter to point to the second instruction. The first and second instruction are virtual machine instructions and the execute unit is adapted to interprete these virtual machine instructions.

No. of Pages : 27 No. of Claims : 33

(12) PATENT APPLICATION PUBLICATION
(19) INDIA
(22) Date of filing of Application :12/06/2013
(21) Application No.2560/CHE/2013 A
(43) Publication Date : 19/12/2014

(54) Title of the invention : EFFICIENT AND ECONOMICAL RADIATION VAULT

(51) International classification :C30B
(31) Priority Document No :NA
(32) Priority Date :NA
(33) Name of priority country :NA
(86) International Application No :NA
Filing Date :NA
(87) International Publication No : NA
(61) Patent of Addition to Application Number :NA
Filing Date :NA
(62) Divisional to Application Number :NA
Filing Date :NA

(71)**Name of Applicant :**
1)B N Karkera
Address of Applicant :Apartment 2, Homi Jehangir Bhabha Visiting Faculty Block, National Institute of Technology NH 66, Srinivas Nagar, Surathkal, Mangalore - 575025 Karnataka India
(72)**Name of Inventor :**
1)B N Karkera
2)Palash Vadiraj Acharya

(57) Abstract :
In one aspect of present invention, a particle acceleration vault comprised of vault wall and a curved passage. The curved passage is linked to the vault for entry and exit into and out of the vault. The radiation within the vault is confined by vault wall having suitable thickness. The radiation is attenuated through the curved passage by multiple reflections. The curved passage comprise first semicircle wall and a second semicircle wall arranged to form an S maze. The direct radiation from within the vault is received by the first semicircle wall which has higher thickness. The reflected radiation from first semicircle wall is received by second semicircle wall having lesser thickness compared to thickness of first semicircle wall. The S maze has a door which is to provide a physical barrier for human and material movement during the active particle acceleration. Also, the door is configured to turn of the active particle accelerator placed in the vault when the door is opened.

No. of Pages : 12 No. of Claims : 4

(12) PATENT APPLICATION PUBLICATION
(19) INDIA
(22) Date of filing of Application :28/11/2012
(21) Application No.10323/CHENP/2012 A
(43) Publication Date : 19/12/2014

(54) Title of the invention : PROGRAMMING A UNIVERSAL REMOTE CONTROL

(51) International classification :G08C19/28,H04B1/20
(31) Priority Document No :10164965.5
(32) Priority Date :04/06/2010
(33) Name of priority country :EPO
(86) International Application No :PCT/IB2011/052373
Filing Date :30/05/2011
(87) International Publication No :WO/2011/151780
(61) Patent of Addition to Application Number :NA
Filing Date :NA
(62) Divisional to Application Number :NA
Filing Date :NA

(71)**Name of Applicant :**
1)KONINKLIJKE PHILIPS ELECTRONICS N.V.
Address of Applicant :GROENEWOUDSEWEG 1 EINDHOVEN 5621 BA NETHERLANDS
(72)**Name of Inventor :**
1)DE BUYSSCHER Yve
2)THISSEN Rogier Louis Jacques Willem

(57) Abstract :
A method of programming a Universal Remote Control is described. A user is requested to execute a command sequence comprising more than one command from an original Remote Control for controlling a device (306). The commands from said sequence are captured and analyzed (308). The analyzed commands are matched with a code-set or branches of a code-tree data base (310). The command sequence is used for generating a macro for executing an activity including the device (316).

No. of Pages : 16 No. of Claims : 11

(12) PATENT APPLICATION PUBLICATION
(19) INDIA
(22) Date of filing of Application :30/12/2013
(21) Application No.10334/CHENP/2013 A
(43) Publication Date : 19/12/2014

(54) Title of the invention : SHOE WITH RECONFIGURABLE INSOLE AND METHOD

(51) International classification :A43B17/02,A43B7/14,A43B7/28
(31) Priority Document No :61/497202
(32) Priority Date :15/06/2011
(33) Name of priority country :U.S.A.
(86) International Application No :PCT/US2012/042043
Filing Date :12/06/2012
(87) International Publication No :WO 2012/173986
(61) Patent of Addition to Application Number :NA
Filing Date :NA
(62) Divisional to Application Number :NA
Filing Date :NA

(71)**Name of Applicant :**
1)ROY HAYES STUDIO INC.
Address of Applicant :4657 Sugar Maple Ct. S.E. Kentwood Michigan 49508 U.S.A.
(72)**Name of Inventor :**
1)HAYES Roy S.

(57) Abstract :
A reconfigurable article of footwear has a reconfigurable insole inserted through an opening for receiving the foot of the user that is supported on a midsole. The reconfigurable insole has a primary footbed and a removable footbed. The primary footbed has a top side for supporting the foot of the user and a bottom side for contacting at least a portion of the midsole and for engaging the removable footbed. The removable footbed has a top side for engaging a portion of the bottom side of the primary footbed and a bottom side for contacting the midsole. Detachable corresponding and aligned fasteners on each of the bottom side of the primary footbed and the top side of the removable footbed detachably secure the removable footbed to the primary footbed.

No. of Pages : 25 No. of Claims : 18

(12) PATENT APPLICATION PUBLICATION
(19) INDIA
(22) Date of filing of Application :07/01/2013
(21) Application No.158/CHENP/2013 A
(43) Publication Date : 19/12/2014

(54) Title of the invention : SUPERVISION OF THE SECURITY IN A COMPUTER SYSTEM

(51) International classification :G06F21/00,H04L29/06
(31) Priority Document No :1055715
(32) Priority Date :13/07/2010
(33) Name of priority country :France
(86) International Application No :PCT/EP2011/061697
Filing Date :08/07/2011
(87) International Publication No :WO 2012/007402
(61) Patent of Addition to Application Number :NA
Filing Date :NA
(62) Divisional to Application Number :NA
Filing Date :NA

(71)**Name of Applicant :**
1)CASSIDIAN SAS
Address of Applicant :1 Boulevard Jean Moulin ZAC de la Clef Saint Pierre F 78990 Elancourt France
(72)**Name of Inventor :**
1)PONCHEL Christophe
2)BOEUF Jean Fran§ois

(57) Abstract :
Supervision of the security in a computer system For supervising the security of a computer system (SY) comprising several elementary computer items(BI) such as machines and applications and several gathering items (BIg) such as networks services or sites gathering elementary items a supervision device (DS) collects base measurements (MB) representative of states of the elementary items. A unit (UDI) determines several security indicators (I) of different types for each elementary item according to respective functions of the base measurements and several security indicators of different types for each gathering item. Each security indicator of a given type of a gathering item is determined according to a respective function of the security indicators of the given type of the elementary items gathered in the gathering item. The indicators of one item relate to the availability the intrusion the vulnerability and the compliance to a security policy.

No. of Pages : 44 No. of Claims : 15

(12) PATENT APPLICATION PUBLICATION
(19) INDIA
(22) Date of filing of Application :10/01/2013
(21) Application No.259/CHENP/2013 A
(43) Publication Date : 19/12/2014

(54) Title of the invention : DEVICE FOR PRODUCING ETHANOL AND METHOD FOR PRODUCING ETHANOL

(51) International classification :C12M,C12P
(31) Priority Document No :2010165151
(32) Priority Date :22/07/2010
(33) Name of priority country :Japan
(86) International Application No :PCT/JP2011/004119
Filing Date :21/07/2011
(87) International Publication No :WO 2012/011285
(61) Patent of Addition to Application Number :NA
Filing Date :NA
(62) Divisional to Application Number :NA
Filing Date :NA

(71)**Name of Applicant :**
1)NIPPON STEEL & SUMIKIN ENGINEERING CO. LTD.
Address of Applicant :Osaki Center Building 5 1 Osaki 1 chome Shinagawa ku Tokyo 1418604 Japan
2)THE UNIVERSITY OF TOKYO
(72)**Name of Inventor :**
1)KIUCHI Takafumi
2)HIDAKA Ryohta
3)ISHIBASHI Yoichi
4)SUMI Tomonori
5)KATOH Yasuhiko
6)KANSHA Yasuki
7)TSUTSUMI Atsushi

(57) Abstract :
Disclosed are a method for producing ethanol and a device for producing ethanol that are suitable to the recycled use of an enzyme. The device is configured from: a vacuum distillation tower (11) into which an ethanol fermented liquid generated by saccharification fermentation of a biomass starting material is introduced and with the interior in a state that is at a lower pressure than atmospheric pressure that subjects the ethanol fermented liquid to distillation distilling ethanol vapor that contains water vapor and removing as a bottom product the enzyme containing concentrated waste liquid that is reused for saccharification fermentation of the biomass starting material; and a fractionating tower (12) for fractionating the ethanol vapor distilled from the vacuum distillation tower (11). In this case the energy of the ethanol vapor can be more efficiently taken advantage of if the device is provided with a first compressor (16) that adiabatically compresses the ethanol vapor distilled from the vacuum distillation tower (11) and the ethanol vapor adiabatically compressed by the first compressor (16) is introduced into the fractionating tower (12).

No. of Pages : 84 No. of Claims : 25

(12) PATENT APPLICATION PUBLICATION
(19) INDIA
(22) Date of filing of Application :05/12/2012
(21) Application No.10194/CHENP/2012 A
(43) Publication Date : 19/12/2014

(54) Title of the invention : SYSTEM APPARATUS AND METHOD FOR CONTROL CHANNEL CONFIGURATION IN WIRELESS COMMUNICATION SYSTEMS

(51) International classification :H04W72/04
(31) Priority Document No :61/334,141
(32) Priority Date :12/05/2010
(33) Name of priority country :U.S.A.
(86) International Application No :PCT/US2011/036322
Filing Date :12/05/2011
(87) International Publication No :WO/2011/143480
(61) Patent of Addition to Application Number :NA
Filing Date :NA
(62) Divisional to Application Number :NA
Filing Date :NA

(71)**Name of Applicant :**
1)QUALCOMM INCORPORATED
Address of Applicant :ATTN: International IP Administration 5775 Morehouse Drive San Diego California 92121-1714 U.S.A.
(72)**Name of Inventor :**
1)TAO LUO
2)JUAN MONTOJO
3)WANSHI CHEN

(57) Abstract :
In accordance with aspects of the disclosure, a method, apparatus, and computer program product are provided for wireless communication. The method, apparatus, and computer program product, in an implementation, may be configured to provide separate control channels for each of downlink grant information and uplink grant information, encode the control channels with an identifier known only to receiving nodes that are configured to decode the control channels with the identifier, and convey information to the receiving nodes that the identifier is known to the receiving nodes. The method, apparatus, and computer program product, in an implementation, may be configured to determine an aggregation level of a common search space related to common control resources, wherein the aggregation level is less than four, and receive control data from one or more candidates in the common search space that include contiguous control channel elements according to the aggregation level.

No. of Pages : 71 No. of Claims : 78

(12) PATENT APPLICATION PUBLICATION
(19) INDIA
(22) Date of filing of Application :18/05/2009
(21) Application No.1137/CHE/2009 A
(43) Publication Date : 19/12/2014

(54) Title of the invention : A PORTABLE SEMI AUTOMATED DOUGH PRESSING DEVICE

(51) International classification :a21c
(31) Priority Document No :NA
(32) Priority Date :NA
(33) Name of priority country :NA
(86) International Application No :NA
Filing Date :NA
(87) International Publication No : NA
(61) Patent of Addition to Application Number :NA
Filing Date :NA
(62) Divisional to Application Number :NA
Filing Date :NA

(71)**Name of Applicant :**
1)YADRAMY SURESH BABU
Address of Applicant :1-8-10, C.C.I. ROAD, TANDUR, R.R.DIST; 501141 Andhra Pradesh India
(72)**Name of Inventor :**
1)YADRAMY SURESH BABU
2)CHOURAT SUDHAKAR

(57) Abstract :
A portable semi automated dough pressing device with a power saving mechanism and a method lor enabling a pressing mechanism of the dough are disclosed. The device includes a circular shaped rotating base and at least one pair of a cylindrical rollers coupled to each oilier placed in an axial alignment on an upper surface of the circular shaped rotating base for enabling a circular shape of the dough placed between the. circular shaped rotating baseband at least one pair of the cylindrical rollers. The device further includes a handle for; holding firmly at distal ends of the at least one pair of (he evlmdvicai rollers. A mechanism is employed ibv enabling an indirect proximate contact i| o\ the pair of cylindrical rollers mutually opposite to each other and the circular shaped fl rotating base and further enabling a rotation of the pair cylindrical rollers with respect to the rotation of the circular shaped base.

No. of Pages : 21 No. of Claims : 21

(12) PATENT APPLICATION PUBLICATION
(19) INDIA
(22) Date of filing of Application :11/06/2013
(21) Application No.2539/CHE/2013 A
(43) Publication Date : 19/12/2014

(54) Title of the invention : ENGINE RUNNING ON REPULSIVE FORCE GENERATED BETWEEN MAGNETIC FIELDS OF SUPER CONDUCTING MAGNET AND INDUCTION COIL BY EITHER REVOLVING THE COILS IN FRONT OF THE SUPER CONDUCTING MAGNET OR ROTATING THE SUPER CONDUCTING MAGNET IN A CIRCLE OF COILS

(51) International classification	:G01R33/20
(31) Priority Document No	:NA
(32) Priority Date	:NA
(33) Name of priority country	:NA
(86) International Application No	:NA
Filing Date	:NA
(87) International Publication No	: NA
(61) Patent of Addition to Application Number	:NA
Filing Date	:NA
(62) Divisional to Application Number	:NA
Filing Date	:NA

(71)**Name of Applicant :**
1)SHARAD KUMAR M SHARMA
Address of Applicant :98/2-1, FIRST FLOOR, KESHAVA PRIYA, 7TH CROSS DOMLUR VILLAGE, BANGALORE - 560 071 Karnataka India
(72)**Name of Inventor :**
1)SHARAD KUMAR M SHARMA

(57) Abstract :
The idea of building an engine by generating repulsive force between superconducting magnets and conducting coils.

No. of Pages : 23 No. of Claims : 14

(12) PATENT APPLICATION PUBLICATION
(19) INDIA
(22) Date of filing of Application :15/06/2013
(21) Application No.2608/CHE/2013 A
(43) Publication Date : 19/12/2014

(54) Title of the invention : A METHOD AND SYSTEM OF SPINE SURGERY

(51) International classification :A61B
(31) Priority Document No :NA
(32) Priority Date :NA
(33) Name of priority country :NA
(86) International Application No :NA
Filing Date :NA
(87) International Publication No : NA
(61) Patent of Addition to Application Number :NA
Filing Date :NA
(62) Divisional to Application Number :NA
Filing Date :NA

(71)**Name of Applicant :**
1)Nobert Thomas Pallath
Address of Applicant :Pallath House, Pambaimoola, Edakochi P.O, Kochi-682006, Kerala India
(72)**Name of Inventor :**
1)Nobert Thomas Pallath
2)Dr. Tessamma Thomas

(57) Abstract :
The present invention relates to a method and system of spine surgery. In one embodiment, this can be accomplished by providing an X-ray source to generate plurality slices of computed tomographic images of the region of candidate vertebra at a separation of 2 to 3mm, selecting an appropriate representative computed tomographic image of the candidate vertebra from the generated images, marking the landmark points by drawing vertical lines on the representative image, in order to compute the parameters of pedicle width and height. Overlaying the representative image with vertical lines over the real time video via perfectly adjusting the focus and zoom of a camera such that the video displays the vertebra with three needles, used for registration. Two sets of markers placed centrally and orthogonally to each other on the body of the micro drill facing each of the orthogonal cameras, wherein the placement of markers are for easier object detection and checking the orientation of the drill in the three dimensional space co-ordinates, which is obtained by fusing the two dimensional marker positions with respect to the two orthogonal image planes of the respective cameras and for the drilling of pilot hole with the assistance of micro motor drill, for the precise insertion of pedicle screw into the pedicle area of the candidate vertebra.

No. of Pages : 28 No. of Claims : 16

(12) PATENT APPLICATION PUBLICATION
(19) INDIA
(22) Date of filing of Application :18/12/2013
(21) Application No.10099/CHENP/2013 A
(43) Publication Date : 19/12/2014

(54) Title of the invention : TRANSISTORS AND METHODS FOR MAKING THEM

(51) International classification :H01L51/00,H01L51/05
(31) Priority Document No :1108864.8
(32) Priority Date :26/05/2011
(33) Name of priority country :U.K.
(86) International Application No :PCT/GB2012/051170
Filing Date :24/05/2012
(87) International Publication No :WO 2012/160383
(61) Patent of Addition to Application Number :NA
Filing Date :NA
(62) Divisional to Application Number :NA
Filing Date :NA

(71)**Name of Applicant :**
1)CENTRE FOR PROCESS INNOVATION LIMITED
Address of Applicant :The Wilton Centre Wilton Redcar Teesside TS10 4RF U.K.
(72)**Name of Inventor :**
1)BROWN Beverley Anne
2)OGIER Simon Dominic
3)PALUMBO Marco
4)McCALL Keri Laura

(57) Abstract :
A semiconductor composition which comprises a soluble polyacene semiconductor and a polymeric semiconducting binder the binder having a permittivity greater than 3.4 at 000 Hz.The charge mobility of the semiconducting binder when measured in a pure state is greater than 10 cm/Vs and more preferably greater than 10 cm/Vs. Organic thin film transistors in which the source and drain electrodes are bridged by the semiconductorcomposition have desirable properties of reproducibility and charge mobility. The organic semiconducting composition can be applied by solution coating.

No. of Pages : 99 No. of Claims : 23

(12) PATENT APPLICATION PUBLICATION
(19) INDIA
(22) Date of filing of Application :12/12/2012
(21) Application No.10364/CHENP/2012 A
(43) Publication Date : 19/12/2014

(54) Title of the invention : DEVICE AND METHOD FOR POWER-SAVING DRIVING OF DEVICE HAVING SAME LOAD PATTERN

(51) International classification :H02P27/06,H02M3/155,H02M7/48
(31) Priority Document No :2010135657
(32) Priority Date :15/06/2010
(33) Name of priority country :Japan
(86) International Application No :PCT/JP2011/063468
Filing Date :13/06/2011
(87) International Publication No :WO 2011/158775
(61) Patent of Addition to Application Number :NA
Filing Date :NA
(62) Divisional to Application Number :NA
Filing Date :NA

(71)**Name of Applicant :**
1)IHI Corporation
Address of Applicant :1 1 Toyosu 3 Chome Koto ku Tokyo 1358710 Japan
(72)**Name of Inventor :**
1)NIIZUMA Motonao

(57) Abstract :
Disclosed is a power saving driving apparatus that is provided with a DC DC converter (93) driven by a battery (91) and an inverter (19) driven by the output of the DC DC converter and that is for a uniform load pattern apparatus (23) driven by a motor (21) having the power therefor supplied by the inverter and driven repeatedly with a uniform load pattern. The power saving driving apparatus is provided with: a power amount calculator (81) for calculating the amount of power (W) to be received from the battery when loaded with the uniform load pattern; and a parameter selection / command output unit (83) for varying the parameters of the inverter (carrier wave frequency command value (F) and output voltage command value (G)) among a plurality of values comparing the amount of power to be received for each of the parameter values selecting parameters that will make the amount of power to be received minimum and outputting a command to the inverter.

No. of Pages : 75 No. of Claims : 8

(12) PATENT APPLICATION PUBLICATION
(19) INDIA
(22) Date of filing of Application :12/12/2012
(21) Application No.10370/CHENP/2012 A
(43) Publication Date : 19/12/2014

(54) Title of the invention : BREAST CANCER THERAPY USING AN ENGINEERED RESPIRATORY SYNCYTIAL VIRUS

(51) International classification :A01N63/00,A61K48/00
(31) Priority Document No :12/800,585
(32) Priority Date :18/05/2010
(33) Name of priority country :U.S.A.
(86) International Application No :PCT/US2011/000602
Filing Date :04/04/2011
(87) International Publication No :WO/2011/146100
(61) Patent of Addition to Application Number :NA
Filing Date :NA
(62) Divisional to Application Number :NA
Filing Date :NA

(71)**Name of Applicant :**
1)WEIDONG Zhang
Address of Applicant :20119 Tamiami Ave Tampa FL 33647 United States of America
2)LIXIAN Jiang
3)CALVIN Cao
(72)**Name of Inventor :**
1)WEIDONG Zhang
2)LIXIAN Jiang
3)CALVIN Cao

(57) Abstract :
The invention discloses an engineered oncolytic respiratory syncytial virus (RSV) NS l gene deficient RSV and its usage to treat breast cancer by killing cancer cells with in vitro and in vivo evidences.

No. of Pages : 24 No. of Claims : 8

(12) PATENT APPLICATION PUBLICATION
(19) INDIA
(22) Date of filing of Application :12/06/2013
(21) Application No.2552/CHE/2013 A
(43) Publication Date : 19/12/2014

(54) Title of the invention : MOSQUITO KILLING DEVICE

(51) International classification :A01M
(31) Priority Document No :NA
(32) Priority Date :NA
(33) Name of priority country :NA
(86) International Application No :NA
Filing Date :NA
(87) International Publication No : NA
(61) Patent of Addition to Application Number :NA
Filing Date :NA
(62) Divisional to Application Number :NA
Filing Date :NA

(71)**Name of Applicant :**
1)MUKTHA LABORATIES PRIVARE LIMITED
Address of Applicant :W-4, 5TH MAIN ROAD, ANNA NAGAR, CHENNAI - 600 040 Tamil Nadu India
(72)**Name of Inventor :**
1)KUMAR LOGANATHAN

(57) Abstract :
This invention discloses a method, a composition and a device for reducing the disease transmission caused by pests and specifically mosquitoes. The component is a combination of 2 preparations, of which one preparation shall have olfactory attractive index in the range of 0.3 to 0.4 and the second preparation shall have olfactory attractive index in the range grater than 0.47. The method involves similarly human masking and attracting mosquitoes into a target area. The device comprises to generate the target area for attracting the mosquitoes and killing the same by asphyxiation.

No. of Pages : 33 No. of Claims : 14

(12) PATENT APPLICATION PUBLICATION
(19) INDIA
(22) Date of filing of Application :17/06/2013
(21) Application No.2621/CHE/2013 A
(43) Publication Date : 19/12/2014

(54) Title of the invention : PHARMACEUTICAL COMPOSITION OF TENOFOVIR DISOPROXIL

(51) International classification :A61K
(31) Priority Document No :NA
(32) Priority Date :NA
(33) Name of priority country :NA
(86) International Application No :NA
Filing Date :NA
(87) International Publication No : NA
(61) Patent of Addition to Application Number :NA
Filing Date :NA
(62) Divisional to Application Number :NA
Filing Date :NA

(71)**Name of Applicant :**
1)AIZANT DRUG RESEARCH SOLUTIONS PRIVATE LIMITED
Address of Applicant :SY NO. 172 & 173, APPAREL PARK ROAD, DULAPALLY VILLAGE, QUTHBULLAPUR MANDAL, HYDERABAD - 500 014 Andhra Pradesh India
(72)**Name of Inventor :**
1)PAVAN KUMAR ALLURI
2)SUBHASH CHANDRA BOSE MYLAMALA
3)SUSHEEL PRAKASH UPPALA
4)SANTHOSH REDDY KUCHANPALLY
5)NAGARAJU DONTIKA
6)RAGHUPATHI KANDARAPU
7)VARMA S. RUDRARAJU

(57) Abstract :
The present invention relates to a hot melt extruded tenofovir disoproxil or a pharmaceutically acceptable salt thereof and a pharmaceutical composition comprising the same. The invention also relates to the methods of preparation of hot melt extruded tenofovir disoproxil or a pharmaceutically acceptable salt thereof. A pharmaceutical composition comprising hot melt extruded tenofovir disoproxil or a pharmaceutically acceptable salt thereof and optionally other anti-HIV drugs.

No. of Pages : 22 No. of Claims : 10

(12) PATENT APPLICATION PUBLICATION
(19) INDIA
(22) Date of filing of Application :19/12/2013
(21) Application No.10147/CHENP/2013 A
(43) Publication Date : 19/12/2014

(54) Title of the invention : SENSOR FOR DETECTING AT LEAST ONE PROPERTY OF A FLUID MEDIUM

(51) International classification :G01L19/14
(31) Priority Document No :10 2011 078 048.3
(32) Priority Date :24/06/2011
(33) Name of priority country :Germany
(86) International Application No :PCT/EP2012/057755
Filing Date :27/04/2012
(87) International Publication No :WO 2012/175244
(61) Patent of Addition to Application Number :NA
Filing Date :NA
(62) Divisional to Application Number :NA
Filing Date :NA

(71)**Name of Applicant :**
1)ROBERT BOSCH GMBH
Address of Applicant :Postfach 30 02 20 70442 Stuttgart Germany
(72)**Name of Inventor :**
1)PANHOELZL Bernhard
2)FLAVIGNIE Romuald
3)ROESSER Christian
4)WOLFF Janpeter
5)RUETH Falk

(57) Abstract :
The invention proposes a method for producing a sensor (10) for detecting at least one property of a fluid medium in particular a pressure. The method comprises the steps of providing a sensor body (20) wherein the sensor body (20) is set up to be introduced into a wall of a measurement area providing at least one sensor element (22) and welding the sensor element (22) to the sensor body (20) wherein a weld pool backup (54; 66; 74) is provided on the sensor element (22).

No. of Pages : 25 No. of Claims : 10

(12) PATENT APPLICATION PUBLICATION
(19) INDIA
(22) Date of filing of Application :12/06/2013
(21) Application No.2556/CHE/2013 A
(43) Publication Date : 19/12/2014

(54) Title of the invention : AUTOMATED QUALITY ASSESSMENT OF PHYSIOLOGICAL SIGNALS

(51) International classification :A61B5/00
(31) Priority Document No :NA
(32) Priority Date :NA
(33) Name of priority country :NA
(86) International Application No :NA
Filing Date :NA
(87) International Publication No : NA
(61) Patent of Addition to Application Number :NA
Filing Date :NA
(62) Divisional to Application Number :NA
Filing Date :NA

(71)**Name of Applicant :**
1)INTEL CORPORATION
Address of Applicant :2200 MISSION COLLEGE BLVD., SANTA CLARA, CA 95052, UNITED STATES OF AMERICA
(72)**Name of Inventor :**
1)AMIT BAXI

(57) Abstract :
Methods and systems may provide for receiving a physiological signal from a sensor configuration associated with a mobile device. A qualitative analysis may be conducted for each of a plurality of noise sources in the physiological signal to obtain a corresponding plurality of qualitative ratings. In addition, at least the plurality of qualitative ratings may be used to determine whether to report the physiological signal to a remote location. In one example, a quantitative analysis is conducted for each of the plurality of noise sources to obtain an overall quality level, wherein the overall quality level is also used to determine whether to report the physiological signal to the remote location.

No. of Pages : 25 No. of Claims : 19

(12) PATENT APPLICATION PUBLICATION
(19) INDIA
(22) Date of filing of Application :17/06/2013
(21) Application No.2626/CHE/2013 A
(43) Publication Date : 19/12/2014

(54) Title of the invention : A METHOD OF CONTROLLING ACCESS IN A VEHICLE

(51) International classification :G06F
(31) Priority Document No :NA
(32) Priority Date :NA
(33) Name of priority country :NA
(86) International Application No :NA
Filing Date :NA
(87) International Publication No : NA
(61) Patent of Addition to Application Number :NA
Filing Date :NA
(62) Divisional to Application Number :NA
Filing Date :NA

(71)**Name of Applicant :**
1)ROBERT BOSCH ENGINEERING AND BUSINESS SOLUTIONS LIMITED
Address of Applicant :123, INDUSTRIAL LAYOUT, HOSUR ROAD, KORMANGALA, BANGALORE - 560 095 Karnataka India
2)ROBERT BOSCH GMBH
(72)**Name of Inventor :**
1)ARVIND KUMAR S

(57) Abstract :
Disclosed herein is a method of controlling access to multiple devices in a vehicle. The method comprises authenticating a first user based on a predefined access criteria set by an administrator. A first set of privileges 101 is granted to the first user based on the authenticating step. The identity of the second user is verified based on a predefined access criteria set by the administrator. A second set of privileges 102 is provided to the second user by the first user based on the first set of privileges 101, and the administrator is notified upon providing the second set of privileges 102 to the second user by the first user.

No. of Pages : 9 No. of Claims : 5

(12) PATENT APPLICATION PUBLICATION
(19) INDIA
(22) Date of filing of Application :09/04/2012
(21) Application No.3184/CHENP/2012 A
(43) Publication Date : 19/12/2014

(54) Title of the invention : METHOD FOR REDUCING ADHESION OF BOILER AND DEVICE FOR THE SAME

(51) International classification :F23K1/00,F23C1/00,F23C99/00
(31) Priority Document No :2009-234852
(32) Priority Date :09/10/2009
(33) Name of priority country :Japan
(86) International Application No :PCT/JP2010/067484
Filing Date :05/10/2010
(87) International Publication No :WO 2011/043351 A1
(61) Patent of Addition to Application Number :NA
Filing Date :NA
(62) Divisional to Application Number :NA
Filing Date :NA

(71)**Name of Applicant :**
1)KABUSHIKI KAISHA KOBE SEIKO SHO (KOBE STEEL, LTD.)
Address of Applicant :10-26, WAKINOHAMA-CHO, 2-CHOME, CHUO-KU, KOBE-SHI, HYOGO 651-8585 Japan
(72)**Name of Inventor :**
1)AKIYAMA, KATSUYA
2)PAK, HAEYANG

(57) Abstract :
A device for reducing ash adhesion in a boiler, includes: a calculator (9) which, in the case of mixing one or more types of solid fuels, calculates and determines the mixing ratio of the solid fuels so that the resultant solid fuel mixture has a slag viscosity not lower than a reference value at a predetermined atmospheric temperature; and fuel supply amount regulators (3a, 3b) which regulate the amount of the solid fuels to be supplied to the boiler based on the mixing ratio as described above. By using this device, ash adhesion in a boiler can be easily and accurately predicted and, therefore, ash adhesion can be reduced even in the case of using various types of solid fuels including a low-grade coal as fuel.

No. of Pages : 35 No. of Claims : 14

(12) PATENT APPLICATION PUBLICATION
(19) INDIA
(22) Date of filing of Application :26/12/2012
(21) Application No.10779/CHENP/2012 A
(43) Publication Date : 19/12/2014

(54) Title of the invention : FLAT RHEOLOGY WELLBORE FLUID

(51) International classification :C09K8/36,C09K8/64
(31) Priority Document No :61/360391
(32) Priority Date :30/06/2010
(33) Name of priority country :U.S.A.
(86) International Application No :PCT/US2011/042606
Filing Date :30/06/2011
(87) International Publication No :WO 2012/003325
(61) Patent of Addition to Application Number :NA
Filing Date :NA
(62) Divisional to Application Number :NA
Filing Date :NA

(71)**Name of Applicant :**
1)M I L.L.C.
Address of Applicant :5950 North Course Drive Houston TX 77072 U.S.A.
(72)**Name of Inventor :**
1)RIFE Nathan
2)YOUNG Steven
3)LEE Lijein

(57) Abstract :
Wellbore fluids comprising a flat rheology profile are disclosed herein. In one aspect the invert emulsion wellbore fluid is formulated to include: an oleallinous fluid as the continuous phase of the invert emulsion well bore fluid a non oleaginous fluid as the discontinuous phase of the invert emulsion well bore fluid; an emulsifier; and a rheology modifier wherein the rheology modifier is a polyamide formed by reacting an alcoholamine a fatty acid and polyamine where the invert emulsion well bore fluid has a flat rheology profile.

No. of Pages : 22 No. of Claims : 16

(12) PATENT APPLICATION PUBLICATION
(19) INDIA
(22) Date of filing of Application :26/12/2012
(21) Application No.10785/CHENP/2012 A
(43) Publication Date : 19/12/2014

(54) Title of the invention : A COMPUTER-IMPLEMENTED METHOD A COMPUTER PROGRAM PRODUCT AND A COMPUTER SYSTEM FOR IMAGE PROCESSING

(51) International classification :G06F17/30,G06K9/00,G06K9/72
(31) Priority Document No :10425225.9
(32) Priority Date :02/07/2010
(33) Name of priority country :EUROPEAN UNION
(86) International Application No :PCT/EP2011/003235
Filing Date :30/06/2011
(87) International Publication No :WO 2012/000675
(61) Patent of Addition to Application Number :NA
Filing Date :NA
(62) Divisional to Application Number :NA
Filing Date :NA

(71)**Name of Applicant :**
1)Accenture Global Services Limited
Address of Applicant :3 Grand Canal Plaza Grand Canal Street Upper Dublin 4 IRELAND
(72)**Name of Inventor :**
1)CAPUOZZO Giuseppe
2)BORGHINI Marco
3)MAMMOLITI Fabio

(57) Abstract :
The present description refers in particular to a computer-implemented method a computer program product and a computer system for image processing the method comprising: - receiving at least one user image; - identifying a plurality of image classification elements of the user image by: -- assigning an initial classification to the user image wherein the initial classification is based on temporal data associated with the user image; -- determining at least one image label that globally describes content of the user image; -- calculating a label correctness value for each image label; recognizing at least one image component of the user image; calculating a component correctness value for each image component; correlating the image label and the image component using the label correctness value and the component correctness value whereby a correlated image label and a correlated image component are identified; --

No. of Pages : 61 No. of Claims : 14

(12) PATENT APPLICATION PUBLICATION
(19) INDIA
(22) Date of filing of Application :26/04/2013
(21) Application No.3286/CHENP/2013 A
(43) Publication Date : 19/12/2014

(54) Title of the invention : POLYETHYLENE BASED ORIENTED MONOFILAMENTS AND STRIPS AND METHOD FOR THE PREPARATION THEREOF

(51) International classification :D01F6/04,D01F6/30,D01F6/46
(31) Priority Document No :NA
(32) Priority Date :NA
(33) Name of priority country :NA
(86) International Application No :PCT/ES2010/070705
Filing Date :29/10/2010
(87) International Publication No :WO 2012/056053
(61) Patent of Addition to Application Number :NA
Filing Date :NA
(62) Divisional to Application Number :NA
Filing Date :NA

(71)**Name of Applicant :**
1)DOW GLOBAL TECHNOLOGIES LLC
Address of Applicant :2040 Dow Center Midland Michigan 48674 U.S.A.
(72)**Name of Inventor :**
1)SANDKUEHLER Peter
2)CLAASEN Gert

(57) Abstract :
The present disclosure provides for a tape or monofilament of a polyethylene composition comprising less than or equal to 100 percent by weight of the polyethylene composition derived from ethylene monomers, and less than 20 percent by weight of the polyethylene composition derived from one or more a-olefin monomers, where the polyethylene composition of the tape or monofilament has a density in the range of 0.920 to 0.970 g/cm3, a molecular weight distribution (Mv/Mn) in the range of 1.70 to 3.5, a melt index (I2) in the range of 0.2 to 50 g/10 minutes, a molecular weight distribution (Mz/Mw) in the range of less than 2.5, vinyl unsaturation of less than 0.1 vinyls per one thousand carbon atoms present in the backbone of the polyethylene composition, where the tape or monofilament has a decitex of greater than 500 g/10,000 m.

No. of Pages : 50 No. of Claims : 21

(12) PATENT APPLICATION PUBLICATION
(19) INDIA
(22) Date of filing of Application :29/01/2013
(21) Application No.377/CHE/2013 A
(43) Publication Date : 19/12/2014

(54) Title of the invention : SYSTEM AND METHOD FOR DETERMINING A LUBRICANT DISCARD INTERVAL

(51) International classification :G01N
(31) Priority Document No :13/363,433
(32) Priority Date :01/02/2012
(33) Name of priority country :U.S.A.
(86) International Application No :NA
Filing Date :NA
(87) International Publication No : NA
(61) Patent of Addition to Application Number :NA
Filing Date :NA
(62) Divisional to Application Number :NA
Filing Date :NA

(71)**Name of Applicant :**
1)AFTON CHEMICAL CORPORATION
Address of Applicant :500 SPRING STREET, RICHMOND, VIRGINIA 23219 U.S.A.
(72)**Name of Inventor :**
1)TODD M. DVORAK
2)Todd M. Dvorak
3)Dewey P. Szemenyei

(57) Abstract :
A system, a method and a computer program to predict a portion of used lubricant in an engine that is to be drained and replaced by fresh lubricant based on an analysis parameter value that is measured in a sample of used engine lubricant from the engine. The system includes a first input that receives the analysis parameter value from the used lubricant and stores the analysis parameter value in a memory of a processor. A second input receives an analysis parameter threshold value for the used lubricant at the end of a service interval and stores the analysis parameter threshold value in a memory of the processor. A determiner predicts a future analysis parameter value of a mixture of used and fresh lubricant at the end of the service interval based on the analysis parameter value, and the analysis parameter threshold value.

No. of Pages : 48 No. of Claims : 17

(12) PATENT APPLICATION PUBLICATION
(19) INDIA
(22) Date of filing of Application :13/12/2013
(21) Application No.10010/CHENP/2013 A
(43) Publication Date : 19/12/2014

(54) Title of the invention : METHOD AND APPARATUS FOR FLOW CONGESTION CONTROL IN MULTIFLOW NETWORKS

(51) International classification :H04N
(31) Priority Document No :61/514858
(32) Priority Date :03/08/2011
(33) Name of priority country :U.S.A.
(86) International Application No :PCT/US2012/049513
Filing Date :03/08/2012
(87) International Publication No :WO 2013/020047
(61) Patent of Addition to Application Number :NA
Filing Date :NA
(62) Divisional to Application Number :NA
Filing Date :NA

(71)**Name of Applicant :**
1)QUALCOMM INCORPORATED
Address of Applicant :Attn: International IP Administration 5775 Morehouse Drive San Diego California 92121 U.S.A.
(72)**Name of Inventor :**
1)ZHANG Danlu
2)GE Weiyan
3)KAPOOR Rohit
4)MOHANTY Bibhu Prasad
5)SAMBHWANI Sharad Deepak

(57) Abstract :
The present disclosure provides methods and apparatuses for improved Iub link congestion management based on a dynamic scaling of flow control request message transmission in multiflow wireless environments. For example in an aspect methods and apparatuses are provided for receiving at a NodeB a data request from one or more user equipment (UE) wherein each data request corresponds to a flow and the one or more UE is served by a plurality of NodeBs generating a flow control request corresponding to each flow in response to each data request and sending each flow control request to a radio network controller (RNC). Thereafter a Node B may receive data in response to each flow control request determine a congestion state based on a downlink delay from the RNC detected in the received data and scale a subsequent one or more flow control requests based on the determined congestion state.

No. of Pages : 62 No. of Claims : 32

(12) PATENT APPLICATION PUBLICATION
(19) INDIA
(22) Date of filing of Application :06/12/2012
(21) Application No.10251/CHENP/2012 A
(43) Publication Date : 19/12/2014

(54) Title of the invention : INNOVATIVE DISCOVERY OF THERAPEUTIC DIAGNOSTIC AND ANTIBODY COMPOSITIONS RELATED TO PROTEIN FRAGMENTS OF LEUCYL-TRNA SYNTHETASES

(51) International classification	:A61K38/16,A61K38/17,A61K39/395
(31) Priority Document No	:61/345,532
(32) Priority Date	:17/05/2010
(33) Name of priority country	:U.S.A.
(86) International Application No	:PCT/US2011/036684
Filing Date	:16/05/2011
(87) International Publication No	:WO/2011/146410
(61) Patent of Addition to Application Number	:NA
Filing Date	:NA
(62) Divisional to Application Number	:NA
Filing Date	:NA

(71)**Name of Applicant :**
1)ATYR PHARMA INC.
Address of Applicant :3545 John Hopkins Court Suite #250 San Diego California 92121 United States of America
2)PANGU BIOPHARMA LIMITED
(72)**Name of Inventor :**
1)GREENE Leslie Ann
2)CHIANG Kyle P.
3)HONG Fei
4)VASSEROT Alain P.
5)LO Wing-Sze
6)WATKINS Jeffry D.
7)QUINN Cheryl L.
8)MENDLEIN John D.

(57) Abstract :
Provided are compositions comprising newly identified protein fragments of aminoacyl-tRNA synthetases polynucleotides that encode them and complements thereof related agents and methods of use thereof in diagnostic drug discovery research and therapeutic applications.

No. of Pages : 268 No. of Claims : 125

(12) PATENT APPLICATION PUBLICATION
(19) INDIA
(22) Date of filing of Application :02/01/2013
(21) Application No.11/CHE/2013 A
(43) Publication Date : 19/12/2014

(54) Title of the invention : TRANSMISSION MECHANISM FOR CRAWLER TYPE AGRICULTURAL VEHICLES

(51) International classification	:F16H	(71)**Name of Applicant :**
(31) Priority Document No	:NA	**1)TRACTORS AND FARM EQUIPMENT LIMITED**
(32) Priority Date	:NA	Address of Applicant :NO. 861, ANNASALAI, CHENNAI - 600 002 Tamil Nadu India
(33) Name of priority country	:NA	
(86) International Application No	:NA	(72)**Name of Inventor :**
Filing Date	:NA	**1)S. JAYAKANNA**
(87) International Publication No	: NA	
(61) Patent of Addition to Application Number	:NA	
Filing Date	:NA	
(62) Divisional to Application Number	:NA	
Filing Date	:NA	

(57) Abstract :
A transmission mechanism (201) for crawler type agricultural vehicles is disclosed. The transmission mechanism (201) comprises a motor (23) that has been configured to prevent it from getting immersed in mud, which is associated with a top end of a gearbox comprising a plurality of gear sets (3, 8, 24) enclosed within a gearbox housing (1), and a drive sprocket (15) that is associated with a wheel of the crawler type agricultural vehicle. Unlike conventional gearboxes, the gearbox of the transmission mechanism (201) in the present disclosure is not associated directly with the drive sprocket (15), and thus more space is available for the motor (23). The gearbox used is a spur gearbox and the motor used is a radial piston motor.

No. of Pages : 15 No. of Claims : 7

(12) PATENT APPLICATION PUBLICATION
(19) INDIA
(22) Date of filing of Application :22/01/2014
(21) Application No.512/CHENP/2014 A
(43) Publication Date : 19/12/2014

(54) Title of the invention : NETWORK COORDINATION FOR IMPROVED INTERFERENCE CANCELLATION

(51) International classification :H04W72/08
(31) Priority Document No :61/524719
(32) Priority Date :17/08/2011
(33) Name of priority country :U.S.A.
(86) International Application No :PCT/US2012/051219
Filing Date :16/08/2012
(87) International Publication No :WO 2013/025943
(61) Patent of Addition to Application Number :NA
Filing Date :NA
(62) Divisional to Application Number :NA
Filing Date :NA

(71)**Name of Applicant :**
1)QUALCOMM INCORPORATED
Address of Applicant :Attn: International IP Administration 5775 Morehouse Drive San Diego California 92121 1714 U.S.A.
(72)**Name of Inventor :**
1)YOO Taesang
2)SCHOENEICH Hendrik
3)RAJIH Myriam
4)LUO Tao
5)MALLIK Siddhartha

(57) Abstract :
Communications by base stations in wireless communication networks may be coordinated in a manner to improve performance by mobile devices experiencing interference from non serving base stations. In particular base station communications may be coordinated to improve the performance of interference cancellation by mobile devices. If a user equipment (UE) experiencing interference is capable of interference cancellation then the base stations may coordinate to increase interference to that user equipment so as to improve that UE s ability to perform interference cancellation. Base stations may also coordinate to reduce interference for a UE regardless of the UE s ability to perform interference cancellation. Mobile device performance improvements may also be achieved by coordinating scheduling of resources by the non serving base stations by using communication formats compatible with interference cancellation by spatial coordination.

No. of Pages : 48 No. of Claims : 37

(12) PATENT APPLICATION PUBLICATION
(19) INDIA
(22) Date of filing of Application :19/12/2013
(21) Application No.10110/CHENP/2013 A
(43) Publication Date : 19/12/2014

(54) Title of the invention : FRICTION PAD SPREADER ASSEMBLY INCLUDING SAME AND METHOD OF MOUNTING THEREOF

(51) International classification :F16D55/22,B23P11/00
(31) Priority Document No :13/134640
(32) Priority Date :13/06/2011
(33) Name of priority country :U.S.A.
(86) International Application No :PCT/US2012/042124
Filing Date :13/06/2012
(87) International Publication No :WO 2012/174031
(61) Patent of Addition to Application Number :NA
Filing Date :NA
(62) Divisional to Application Number :NA
Filing Date :NA

(71)**Name of Applicant :**
1)ANSTRO MANUFACTURING INC.
Address of Applicant :238 Wolcott Road Wolcott CT 06716 U.S.A.
(72)**Name of Inventor :**
1)BOSCO Robert R.

(57) Abstract :
A friction pad drag reduction assembly for reducing drag between a rotor and friction pads wherein the assembly comprises one or more pad spreaders that upon a removal of the braking force urge the friction pads away from the rotor. The invention is also directed to the pad spreaders themselves and to methods of assembling friction pad drag reduction assemblies that includes one or more of the pad spreaders.

No. of Pages : 57 No. of Claims : 13

(12) PATENT APPLICATION PUBLICATION
(19) INDIA
(22) Date of filing of Application :03/12/2012
(21) Application No.10118/CHENP/2012 A
(43) Publication Date : 19/12/2014

(54) Title of the invention : DOCKING STATION WITH REDUNDANT COMMUNICATION PATH

(51) International classification :G06F1/16,H04L12/28
(31) Priority Document No :61/351,085
(32) Priority Date :03/06/2010
(33) Name of priority country :U.S.A.
(86) International Application No :PCT/US2011/000993
Filing Date :02/06/2011
(87) International Publication No :WO 2011/152868
(61) Patent of Addition to Application Number :NA
Filing Date :NA
(62) Divisional to Application Number :NA
Filing Date :NA

(71)**Name of Applicant :**
1)SAVANT SYSTEMS LLC
Address of Applicant :SAVANT SYSTEMS LLC U.S.A.
(72)**Name of Inventor :**
1)ROBERT P. MADONNA
2)MICHAEL E. NOONAN
3)MICHAEL C. SILVA

(57) Abstract :
A docking station adapted to receive a touch-sensitive portable control device for communication with a programmable multimedia controller is provided. The docking station has a dedicated, wired redundant communication path coupling the docking station to the programmable multimedia controller for providing effective communication in the absence of wireless or unreliable wireless communications. The docking station is configured to receive signals from the portable control device and to bi-directionally transmit signals to and from said programmable multimedia controller. The portable control device has both wireless and wired compatibility, which includes a touch sensitive user interface configured with configuration information for allowing a user to make selections and enter settings regarding components interfaced with the programmable multimedia controller. The docking station converts the user entered signals into IP messages suitable for transfer over the dedicated, wired redundant communication path.

No. of Pages : 23 No. of Claims : 20

(12) PATENT APPLICATION PUBLICATION
(19) INDIA
(22) Date of filing of Application :14/06/2013
(21) Application No.2597/CHE/2013 A
(43) Publication Date : 19/12/2014

(54) Title of the invention : YAW DRIVE FOR HORIZONTAL AXIS WIND TURBINE

(51) International classification :F03D7/04
(31) Priority Document No :NA
(32) Priority Date :NA
(33) Name of priority country :NA
(86) International Application No :NA
Filing Date :NA
(87) International Publication No : NA
(61) Patent of Addition to Application Number :NA
Filing Date :NA
(62) Divisional to Application Number :NA
Filing Date :NA

(71)**Name of Applicant :**
1)VALAGAM RAJAGOPAL RAGHUNATHAN
Address of Applicant :OLD NO:6, NEW NO:62, 12TH AVENUE, ASHOK NAGAR, CHENNAI - 600 083 Tamil Nadu India
(72)**Name of Inventor :**
1)VALAGAM RAJAGOPAL RAGHUNATHAN

(57) Abstract :
The present invention relates to a yaw drive for horizontal axis wind turbine for maintaining plane of rotation of a blade tips towards favourable wind direction/desired direction. The yaw drive comprises of a rotatable supporting means (1), Static supporting means (2), actuating means (8) and locking means (7). The rotatable supporting means (1) configured to move the nacelle angularly, which includes blades shaft generator etc. The static supporting means (2) configure to secure rotatable supporting means (1) via yaw bearing (4) and housing (3). The locking means (7) configured to rotatably arrest and enable the movement of rotatable supporting means (1). The actuating means configure to actuate the movement of locking means (8) via connecting means (6) and/or pivoting means (5). The above said configuration combines to control yaw movement with respect to favourable or desired wind direction (Refer fig 1 to 5).

No. of Pages : 17 No. of Claims : 8

(12) PATENT APPLICATION PUBLICATION
(19) INDIA
(22) Date of filing of Application :03/07/2013
(21) Application No.5210/CHENP/2013 A
(43) Publication Date : 19/12/2014

(54) Title of the invention : MOBILE COMMUNICATION METHOD, MOBILE MANAGEMENT NODES, AND SERVING GATEWAYS

(51) International classification :H04W92/16,H04W76/06
(31) Priority Document No :2011-002554
(32) Priority Date :07/01/2011
(33) Name of priority country :Japan
(86) International Application No :PCT/JP2011/080445
Filing Date :28/12/2011
(87) International Publication No :WO/2012/093639
(61) Patent of Addition to Application Number :NA
Filing Date :NA
(62) Divisional to Application Number :NA
Filing Date :NA

(71)**Name of Applicant :**
1)NEC CORPORATION
Address of Applicant :7-1, SHIBA 5-CHOME, MINATO-KU, TOKYO 108-8001 Japan
(72)**Name of Inventor :**
1)NISHIDA, KATSUTOSHI
2)TAMURA, TOSHIYUKI

(57) Abstract :
This mobile communication method comprises: a step in which reattachment to MME#2 is started when a UE is paged; a step in which MME#1 sends a DDN Ack message, which contains the IMSI of the UE included in a DDN and a Cause = Re-Attach Success message, to S-GW#1 specified by S-GW address #1 included in the DDN; and a step in which S-GW#1 releases PDN connection #1, which corresponds to the IMSI of the UE included in the DDN Ack message, between P-GW#1 and S-GW#1 when the DDN Ack message is received.

No. of Pages : 38 No. of Claims : 2

(12) PATENT APPLICATION PUBLICATION
(19) INDIA
(22) Date of filing of Application :17/12/2012

(21) Application No.10524/CHENP/2012 A
(43) Publication Date : 19/12/2014

(54) Title of the invention : CONCRETE LIFTING ANCHORS

(51) International classification :E04C5/12,B66F19/02,E04C5/16
(31) Priority Document No :NA
(32) Priority Date :NA
(33) Name of priority country :NA
(86) International Application No :PCT/AU2010/000833
Filing Date :30/06/2010
(87) International Publication No :WO/2011/006190
(61) Patent of Addition to Application Number :NA
Filing Date :NA
(62) Divisional to Application Number :NA
Filing Date :NA

(71)**Name of Applicant :**
1)CASNE VERIGE PTY LTD
Address of Applicant :Ground Floor 18 Dequetteville Terrace Kent Town South Australia 5067 Australia
(72)**Name of Inventor :**
1)SLADOJEVIC Robert

(57) Abstract :
A shear bar for an edge lift anchor for a concrete panel the shear bar being a bar of rectangular cross-section shaped to engage an upper edge of the lifting anchor when installed in the panel the bar having opposed large area faces and opposed smaller area faces and the bar being so shaped that when engaged with the upper edge of the lifting anchor one of its opposed large area faces will face towards the upper surface of the panel in the casting configuration of the panel..

No. of Pages : 23 No. of Claims : 12

(12) PATENT APPLICATION PUBLICATION
(19) INDIA
(22) Date of filing of Application :02/01/2013
(21) Application No.13/CHE/2013 A
(43) Publication Date : 19/12/2014

(54) Title of the invention : THRESHER MECHANISM FOR HARVESTING EQUIPMENTS

(51) International classification :A01F
(31) Priority Document No :NA
(32) Priority Date :NA
(33) Name of priority country :NA
(86) International Application No :NA
Filing Date :NA
(87) International Publication No : NA
(61) Patent of Addition to Application Number :NA
Filing Date :NA
(62) Divisional to Application Number :NA
Filing Date :NA

(71)**Name of Applicant :**
1)TRACTORS AND FARM EQUIPMENT LIMITED
Address of Applicant :NO. 861, ANNASALAI, CHENNAI - 600 002 Tamil Nadu India
(72)**Name of Inventor :**
1)S. JAYAKANNA

(57) Abstract :
A thresher mechanism for a harvesting equipment is disclosed, said thresher mechanism comprising a crop feeder box (101) for crop feeding; a rotor assembly for threshing of the fed crop, and a straw exit (103) for exhausting of straw. The rotor assembly comprises a rotor (102), wherein the rotor (102) is mounted on a frame of the harvesting equipment; a plurality of drums (201) that are evenly placed, inter-connected to one another and lie on the same plane; a plurality of surfaces aligned in different planes, inclusive of x (202), y (203) and z (204) planes, said surfaces being connected horizontally between a first end of the rotor assembly and a second end of the rotor assembly; and a plurality of evenly placed spikes (205) associated with the plurality of surfaces on every plane, said plurality of spikes (205) being configured in such a manner to ensure the fed crop gets beaten on more than one plane.

No. of Pages : 14 No. of Claims : 5

(12) PATENT APPLICATION PUBLICATION
(19) INDIA
(22) Date of filing of Application :13/03/2013
(21) Application No.2015/CHENP/2013 A
(43) Publication Date : 19/12/2014

(54) Title of the invention : ENERGY ABSORBING SEAT FOR A VEHICLE

(51) International classification :B60N2/02
(31) Priority Document No :61/382582
(32) Priority Date :14/09/2010
(33) Name of priority country :U.S.A.
(86) International Application No :PCT/US2011/051558
Filing Date :14/09/2011
(87) International Publication No :WO 2012/037222
(61) Patent of Addition to Application Number :NA
Filing Date :NA
(62) Divisional to Application Number :NA
Filing Date :NA

(71)**Name of Applicant :**
1)BASF SE
Address of Applicant :Carl Bosch Strasse 38 6700 Ludwigshafen 67056 Rheinland Pfalz Germany
(72)**Name of Inventor :**
1)EVANS Jonathan

(57) Abstract :
A seat supports an occupant of a vehicle. The seat comprises a seating frame member for providing a surface to support the occupant and a back frame member extending away from the seating frame member. The back frame member has a first side member and a second side member. A first cross member and a second cross member extend horizontally between the first and second side members. Each of the first and second cross members have a central region flanked on both sides by bent portions with the first and second cross members folded back upon themselves within the bent portions. The bent portions straighten out when a force above a predetermined value is applied to the first and second cross members. The central region plastically deforms once the bent portions straighten out for reducing an impact force transferred from the seat to the occupant.

No. of Pages : 28 No. of Claims : 14

(12) PATENT APPLICATION PUBLICATION
(19) INDIA
(22) Date of filing of Application :22/01/2014
(21) Application No.527/CHENP/2014 A
(43) Publication Date : 19/12/2014

(54) Title of the invention : ILLUMINATION DEVICE WITH CARRIER AND ENVELOPE

(51) International classification :F21V3/04,F21V3/00,F21Y101/02
(31) Priority Document No :61/508111
(32) Priority Date :15/07/2011
(33) Name of priority country :U.S.A.
(86) International Application No :PCT/IB2012/053493
Filing Date :09/07/2012
(87) International Publication No :WO 2013/011408
(61) Patent of Addition to Application Number :NA
Filing Date :NA
(62) Divisional to Application Number :NA
Filing Date :NA

(71)**Name of Applicant :**
1)KONINKLIJKE PHILIPS N.V.
Address of Applicant :High Tech Campus 5 NL 5656 AE Eindhoven Netherlands
(72)**Name of Inventor :**
1)MARINUS Antonius Adrianus Maria
2)GIELEN Vincent Stefan David
3)BUKKEMS Peter Johannes Martinus

(57) Abstract :
An illumination device comprising a light source (110). The illumination device comprises a thermally conducting carrier (130) arranged to support the light source. Furthermore the illumination device comprises an envelope (120) wherein the carrier and the envelope together form a single compartment (140) at least partially enclosing the light source. The carrier is arranged to transfer heat (160) away from the light source to the envelope and the envelope is arranged to dissipate heat (170) away from the illumination device. The carrier and the envelope of the illumination device may further form a single integrated part.

No. of Pages : 21 No. of Claims : 15

(12) PATENT APPLICATION PUBLICATION
(19) INDIA
(22) Date of filing of Application :24/12/2012
(21) Application No.10714/CHENP/2012 A
(43) Publication Date : 19/12/2014

(54) Title of the invention : PEDIATRIC PATIENT-SAFE CPR DEVICE

(51) International classification :A61H31/00,A61N1/39
(31) Priority Document No :61/359995
(32) Priority Date :30/06/2010
(33) Name of priority country :U.S.A.
(86) International Application No :PCT/IB2011/051854
Filing Date :27/04/2011
(87) International Publication No :WO/2012/001541
(61) Patent of Addition to Application Number :NA
Filing Date :NA
(62) Divisional to Application Number :NA
Filing Date :NA

(71)**Name of Applicant :**
1)KONINKLIJKE PHILIPS ELECTRONICS N.V.
Address of Applicant :GROENEWOUDSEWEG 1 EINDHOVEN 5621 BA NETHERLANDS
(72)**Name of Inventor :**
1)HALSNE Eric G.
2)GRIESSER Hans

(57) Abstract :
A CPR guidance device for placement and use on the chest of an adult patient. The device guides a rescuer in the application of an adult CPR protocol. The device also senses patient characteristics indicative of an infant patient. If the device senses that the patient in an infant it appropriately warns the rescuer that the device is for adult patient use only.

No. of Pages : 21 No. of Claims : 14

(12) PATENT APPLICATION PUBLICATION
(19) INDIA
(22) Date of filing of Application :24/12/2012
(21) Application No.10715/CHENP/2012 A
(43) Publication Date : 19/12/2014

(54) Title of the invention : ENERGY APPLICATION APPARATUS FOR APPLYING ENERGY TO AN OBJECT

(51) International classification :A61B18/14
(31) Priority Document No :10167804.3
(32) Priority Date :30/06/2010
(33) Name of priority country :EPO
(86) International Application No :PCT/IB2011/052771
Filing Date :24/06/2011
(87) International Publication No :WO/2012/001595
(61) Patent of Addition to Application Number :NA
Filing Date :NA
(62) Divisional to Application Number :NA
Filing Date :NA

(71)**Name of Applicant :**
1)KONINKLIJKE PHILIPS ELECTRONICS N.V.
Address of Applicant :GROENEWOUDSEWEG 1 EINDHOVEN 5621 BA NETHERLANDS
(72)**Name of Inventor :**
1)DELADI Szabolcs
2)HARKS Erik Godefridus Antonius
3)GIJSBERS Gerardus Henricus Maria
4)SUIJVER Jan Frederik

(57) Abstract :
The invention relates to an energy application apparatus for applying energy to an object. A plurality of energy application elements (4) applies energy to the object at different locations and at least one ultrasound element (18) generates an ultrasound signal being indicative of a property of the object at the different locations wherein at least one energy application element is individually controlled depending on an energy application influence in particular an ablation depth determined for the location at which the at least one energy application element applies energy from the ultrasound signal. Thus at least one local control point for applying energy to the object is provided thereby improving the control of applying energy to the object.

No. of Pages : 43 No. of Claims : 15

(12) PATENT APPLICATION PUBLICATION
(19) INDIA
(22) Date of filing of Application :02/04/2013
(21) Application No.2514/CHENP/2013 A
(43) Publication Date : 19/12/2014

(54) Title of the invention : ACTUATION DEVICE FOR CONTROLLING THE POWER OF AN INTERNAL COMBUSTION ENGINE AND METHOD FOR CONTROLLING THE POWER OF THE INTERNAL COMBUSTION ENGINE

(51) International classification :B60K26/02
(31) Priority Document No :10 2010 042 895.7
(32) Priority Date :25/10/2010
(33) Name of priority country :Germany
(86) International Application No :PCT/EP2011/068515
Filing Date :24/10/2011
(87) International Publication No :WO 2012/055804
(61) Patent of Addition to Application Number :NA
Filing Date :NA
(62) Divisional to Application Number :NA
Filing Date :NA

(71)**Name of Applicant :**
1)FREY Thilo
Address of Applicant :Mehlemer Strae 7 50968 Kln Germany
(72)**Name of Inventor :**
1)FREY Thilo

(57) Abstract :
The invention relates to an actuation device for controlling the power of an engine wherein the actuation device has an actuation range in which when the drive train is closed neither a braking torque nor a drive torque is initiated and an actuation device for controlling the power of an engine wherein the actuation device comprises a first actuation region (24) in which the engine has a continuous braking torque as a result of which it is possible to decelerate the vehicle and a second actuation range (26) in which the engine has a continuous driving torque as a result of which the vehicle can be accelerated. In this context an auxiliary position for finding a third actuation range (28) is adopted wherein this third actuation range (28) lies between the first actuation region (24) and the second actuation range (26). Furthermore the invention relates to a method for controlling the power of an engine in particular for controlling the power of an engine for a motor vehicle in which the method is carried out in such a way that when a drive train is closed neither a braking torque nor a driving torque is initiated and a method for controlling the power of an engine in which method at least one auxiliary position for finding a previously defined operating state is adopted in which operating state the engine initiates neither a braking torque nor a driving torque when the drive train is closed or in which operating state at least one auxiliary position is adopted if an actuation device for controlling the power of an engine is in an actuation range in which the engine has the previously defined operating state.

No. of Pages : 23 No. of Claims : 10

(12) PATENT APPLICATION PUBLICATION
(19) INDIA
(22) Date of filing of Application :21/06/2012
(21) Application No.5416/CHENP/2012 A
(43) Publication Date : 19/12/2014

(54) Title of the invention : A METHOD OF MONITORING A SPRAY DRYER AND A SPRAY DRYER COMPRISING ONE OR MORE INFRARED CAMERAS

(51) International classification :F26B 3/12
(31) Priority Document No :NA
(32) Priority Date :NA
(33) Name of priority country :NA
(86) International Application No :PCT/DK2009/050312
Filing Date :24/11/2009
(87) International Publication No :WO 2011/063808 A1
(61) Patent of Addition to Application Number :NA
Filing Date :NA
(62) Divisional to Application Number :NA
Filing Date :NA

(71)**Name of Applicant :**
1)GEA PROCESS ENGINEERING A/S
Address of Applicant :GLADSAXEVEJ 305, POSTBOKS 45, DK-2860, SOBORG Denmark
(72)**Name of Inventor :**
1)JENSEN, THOMAS, WILLUM
2)BONKE, JOHNNY

(57) Abstract :
The spray dryer (1) comprises a spray drying chamber (2) having a substantially cylindrical top section (4a), a conical wall (3) and a narrowed lower section (4b). In the top section (4a), atomizing means (9) is provided. One or more cameras (6) are associated with the drying chamber (2) in order to monitor the process. At least one of the cameras Is an infrared camera adapted for measuring the temperature within a predefined area.

No. of Pages : 19 No. of Claims : 19

(12) PATENT APPLICATION PUBLICATION
(19) INDIA
(22) Date of filing of Application :31/12/2012

(21) Application No.10907/CHENP/2012 A
(43) Publication Date : 19/12/2014

(54) Title of the invention : ANTI-N3PGLU AMYLOID BETA PEPTIDE ANTIBODIES AND USES THEREOF

(51) International classification	:C07K16/18,A61K39/395,A61P25/28
(31) Priority Document No	:61/373,026
(32) Priority Date	:12/08/2010
(33) Name of priority country	:U.S.A.
(86) International Application No	:PCT/US2011/046994
Filing Date	:09/08/2011
(87) International Publication No	:WO/2012/021469
(61) Patent of Addition to Application Number	:NA
Filing Date	:NA
(62) Divisional to Application Number	:NA
Filing Date	:NA

(71)**Name of Applicant :**
1)ELI LILLY AND COMPANY
Address of Applicant :Lilly Corporate Center City of Indianapolis State of Indiana 46285 United States of America
(72)**Name of Inventor :**
1)Jirong LU
2)Ying TANG
3)Ronald Bradley DEMATTOS

(57) Abstract :
The present invention provides anti-N3pGlu A antibodies or antigen-binding fragment thereof. In addition the present invention provides the use of the anti-N3pGlu A antibodies or antigen-binding fragment thereof for the treatment of Alzheimers disease.

No. of Pages : 34 No. of Claims : 13

(12) PATENT APPLICATION PUBLICATION
(19) INDIA
(22) Date of filing of Application :31/12/2012
(21) Application No.10909/CHENP/2012 A
(43) Publication Date : 19/12/2014

(54) Title of the invention : APPARATUS AND METHODS FOR CALIBRATING DYNAMIC PARAMETERS OF A VEHICLE NAVIGATION SYSTEM

(51) International classification :G01C22/02,G01C21/28,G01C25/00
(31) Priority Document No :12/841,953
(32) Priority Date :22/07/2010
(33) Name of priority country :U.S.A.
(86) International Application No :PCT/US2011/045101
Filing Date :22/07/2011
(87) International Publication No :WO/2012/012775
(61) Patent of Addition to Application Number :NA
Filing Date :NA
(62) Divisional to Application Number :NA
Filing Date :NA

(71)**Name of Applicant :**
1)QUALCOMM INCORPORATED
Address of Applicant :Attn: International IP Administration 5775 Morehouse Drive San Diego California 92121-1714 United States of America
(72)**Name of Inventor :**
1)KULIK Victor
2)CZOMPO Joseph

(57) Abstract :
Apparatus and methods for calibrating dynamic parameters of a vehicle navigation system are presented. One method may include determining whether reference position data of a vehicle is available and measuring composite accelerations of the vehicle. The method may further include generating distance and turn angle data based upon a wheel speed sensors data computing distance and turn angle errors based upon the independent position data and associating the distance and turn angle errors with composite accelerations. A second method presented includes calibrating an inertial navigation sensor within a vehicle navigation system. The second method may include determining reference position data and Inertial Navigation System (INS) data aligning an IMU with the vehicle and aligning the IMU with an Earth fixed coordinate system. The second method may further include computing the vehicle alignment with respect to a horizontal plane and determining calibration parameters for distance sensors associated with the vehicle.

No. of Pages : 45 No. of Claims : 35

(12) PATENT APPLICATION PUBLICATION
(19) INDIA
(22) Date of filing of Application :31/12/2012
(21) Application No.10912/CHENP/2012 A
(43) Publication Date : 19/12/2014

(54) Title of the invention : CHANNEL STATE INFORMATION (CSI) FEEDBACK PROTOCOL FOR MULTIUSER MULTIPLE INPUT MULTIPLE OUTPUT (MU-MIMO)

(51) International classification :H04L25/02,H04B7/06,H04L1/00
(31) Priority Document No :61/361,952
(32) Priority Date :07/07/2010
(33) Name of priority country :U.S.A.
(86) International Application No :PCT/US2011/043260
Filing Date :07/07/2011
(87) International Publication No :WO/2012/006472
(61) Patent of Addition to Application Number :NA
Filing Date :NA
(62) Divisional to Application Number :NA
Filing Date :NA

(71)**Name of Applicant :**
1)QUALCOMM INCORPORATED
Address of Applicant :Attn: International IP Administration 5775 Morehouse Drive San Diego California 92121-1714 United States of America
(72)**Name of Inventor :**
1)ABRAHAM Santosh Paul
2)MERLIN Simone
3)SAMPATH Hemanth
4)WENTINK Maarten Menzo
5)JONES IV Vincent Knowles

(57) Abstract :
Certain aspects of the present disclosure provide techniques and apparatus for using channel state information (CSI) feedback for multiuser multiple-input multiple-output (MU-MIMO) transmission. For certain aspects a method of wireless communications generally includes generating a training frame and transmitting the generated training frame. The training frame typically includes first information identifying a group of one or more apparatuses and second information indicating whether each of the apparatuses in the group is to determine at least one characteristic of a channel. For other aspects a method of wireless communications generally includes receiving a request at an apparatus and transmitting in response to the received request a packet using frame aggregation wherein two or more frames are transmitted in a single transmission using a single header.

No. of Pages : 54 No. of Claims : 104

(12) PATENT APPLICATION PUBLICATION
(19) INDIA
(22) Date of filing of Application :11/06/2013
(21) Application No.2546/CHE/2013 A
(43) Publication Date : 19/12/2014

(54) Title of the invention : MULTI-TEST AUTOMATED BACTERIAL CHALLENGE SKID

(51) International classification :G06F19/00
(31) Priority Document No :NA
(32) Priority Date :NA
(33) Name of priority country :NA
(86) International Application No :NA
Filing Date :NA
(87) International Publication No : NA
(61) Patent of Addition to Application Number :NA
Filing Date :NA
(62) Divisional to Application Number :NA
Filing Date :NA

(71)**Name of Applicant :**
1)Bangalore Biotech Labs Pvt. ltd.
Address of Applicant :49/2, Gubbi Cross, Hennur Bagalur Road, Kothanur P.O., Bangalore 560 077, Karnataka India
(72)**Name of Inventor :**
1)Vibin Baby Joseph
2)Maqsood Ali
3)Subramanian Salavadi Easwaran

(57) Abstract :
An automated bacterial challenge test skid for preventing test invalidation owing to failure of a single filter includes a first, a second, a third and a fourth automated process control loop. Each of the automated process control loop includes a vessel, a test filter, and a recovery filter. The first automated process control loop in conjunction with the second automated process control loop, the third automated process control loop, and the fourth automated process control loop prevents test invalidation owing to failure of a single filter.

No. of Pages : 25 No. of Claims : 10

(12) PATENT APPLICATION PUBLICATION
(19) INDIA
(22) Date of filing of Application :23/01/2014
(21) Application No.549/CHENP/2014 A
(43) Publication Date : 19/12/2014

(54) Title of the invention : DISPLAY DEVICE WITH TAPERED LIGHT REFLECTING LAYER AND MANUFACTURING METHOD FOR SAME

(51) International classification	:G09G3/34,G02B26/02,G02B26/08
(31) Priority Document No	:61/510237
(32) Priority Date	:21/07/2011
(33) Name of priority country	:U.S.A.
(86) International Application No	:PCT/US2012/047640
Filing Date	:20/07/2012
(87) International Publication No	:WO 2013/013167
(61) Patent of Addition to Application Number	:NA
Filing Date	:NA
(62) Divisional to Application Number	:NA
Filing Date	:NA

(71)**Name of Applicant :**
1)PIXTRONIX INC.
Address of Applicant :c/o Qualcomm Incorporated ATTN: International IP Administration 5775 Morehouse Drive San Diego California 92121 1714 U.S.A.
(72)**Name of Inventor :**
1)SONODA Daisuke
2)FUJIYOSHI Jun
3)TAKAHASHI Kohei
4)KAITO Takuo
5)MATSUMOTO Katsumi

(57) Abstract :
A display device includes a substrate having an upper surface. The display device also includes a light reflecting layer to reflect light formed over the upper surface of the substrate. The display device also includes a light absorbing layer to absorb light formed over the upper surface of the light reflecting layer. A plurality of apertures are defined through the light reflecting layer and the light absorbing layer such that at an edge of each of the plurality of apertures the light absorbing layer partially overhangs the light reflecting layer.

No. of Pages : 32 No. of Claims : 16

(12) PATENT APPLICATION PUBLICATION
(19) INDIA
(22) Date of filing of Application :07/12/2012
(21) Application No.10273/CHENP/2012 A
(43) Publication Date : 19/12/2014

(54) Title of the invention : MAPPING OF QUALITY OF SERVICE PARAMETERS BETWEEN RADIO ACCESS TECHNOLOGIES

(51) International classification :H04W36/14,H04W76/04
(31) Priority Document No :12/819,318
(32) Priority Date :21/06/2010
(33) Name of priority country :U.S.A.
(86) International Application No :PCT/US2010/046387
Filing Date :23/08/2010
(87) International Publication No :WO/2011/162783
(61) Patent of Addition to Application Number :NA
Filing Date :NA
(62) Divisional to Application Number :NA
Filing Date :NA

(71)**Name of Applicant :**
1)QUALCOMM INCORPORATED
Address of Applicant :Attn: International IP Administration 5775 Morehouse Drive San Diego California 92121-1714 United States of America
(72)**Name of Inventor :**
1)KLINGENBRUNN Thomas
2)BABBAR Uppinder Singh
3)BALASUBRAMANIAN Srinivasan
4)RAMACHANDRAN Shyamal
5)SWAMINATHAN Arvind

(57) Abstract :
Systems and methodologies are described herein that facilitate efficient transfer of quality of service (QoS) context during inter-radio access technology (RAT) handovers. In particular techniques are described herein for establishing rules for whether a user equipment unit (UE) or an associated network should establish QoS for a mixed-mode application identifying flow to bearer mappings when translating QoS across an inter-RAT handover mapping QoS parameters of respective RATs mitigating QoS depreciation upon multiple handovers performing one or more actions if QoS is not acceptable in a new RAT maintaining QoS during tunnel mode and handling scenarios in which a UE moves between a RAT using network-initiated QoS and a RAT using UE-initiated QoS.

No. of Pages : 104 No. of Claims : 50

(12) PATENT APPLICATION PUBLICATION
(19) INDIA
(22) Date of filing of Application :07/12/2012
(21) Application No.10274/CHENP/2012 A
(43) Publication Date : 19/12/2014

(54) Title of the invention : DEVICES FOR DILATING A PARANASAL SINUS OPENING AND FOR TREATING SINUSITIS

(51) International classification :A61B17/24,A61B17/34,A61F2/18
(31) Priority Document No :61/378,360
(32) Priority Date :30/08/2010
(33) Name of priority country :U.S.A.
(86) International Application No :PCT/US2011/049452
Filing Date :26/08/2011
(87) International Publication No :WO/2012/030673
(61) Patent of Addition to Application Number :NA
Filing Date :NA
(62) Divisional to Application Number :NA
Filing Date :NA

(71)**Name of Applicant :**
1)SINUSYS CORPORATION
Address of Applicant :4030 Fabian Way Palo Alto CA 94303 United States of America
(72)**Name of Inventor :**
1)SCHRECK Thomas A.
2)HESTER Jerome E.
3)EDGREN David E.
4)POUTIATINE Andrew I.
5)RIESER Curtis L.

(57) Abstract :
Medical devices which are adapted to be implanted into a patient for a limited period of time using minimally invasive insertion procedures for dilating a stenotic opening such as a stenotic sinus opening are provided. The devices and methods can be used for treating sinusitis and other nasal and/or sinus disorders.

No. of Pages : 107 No. of Claims : 67

(12) PATENT APPLICATION PUBLICATION
(19) INDIA
(22) Date of filing of Application :21/02/2013
(21) Application No.1398/CHENP/2013 A
(43) Publication Date : 19/12/2014

(54) Title of the invention : CONNECTOR STRUCTURE

(51) International classification :H01R12/78,H01R13/11
(31) Priority Document No :2010190480
(32) Priority Date :27/08/2010
(33) Name of priority country :Japan
(86) International Application No :PCT/JP2011/067504
Filing Date :29/07/2011
(87) International Publication No :WO 2012/026287
(61) Patent of Addition to Application Number :NA
Filing Date :NA
(62) Divisional to Application Number :NA
Filing Date :NA

(71)**Name of Applicant :**
1)YAZAKI CORPORATION
Address of Applicant :4 28 Mita 1 chome Minato ku Tokyo Japan
(72)**Name of Inventor :**
1)TERASAKA Yutaka

(57) Abstract :
The purpose of the present invention is to provide a connector structure which enables miniaturisation while maintaining the contact area of an electrical connection. The connector structure of the present invention is provided with: a fork terminal (4) having a first terminal portion (15) and a second terminal portion (16); a female housing (3) accommodating the fork terminal (4); an FPC assembly (2) inserted into the fork terminal (4) via a mating portion (10) of the female housing (3); and an FPC (7) fixed to the FPC assembly (2). A convex connecting portion (20) is formed on the second terminal portion (16). A sloped fixing portion (28) inclined in the direction of insertion of the FPC assembly (2) is formed on the insertion tip section (25) of the FPC assembly (2). A conductor (6) exposed from the FPC (7) is fixed to the sloped fixing portion (28). A sloped connecting portion (22) inclined to match the sloped fixing portion (28) is formed on the convex connecting portion (20).

No. of Pages : 26 No. of Claims : 3

(12) PATENT APPLICATION PUBLICATION
(19) INDIA
(22) Date of filing of Application :23/01/2014
(21) Application No.550/CHENP/2014 A
(43) Publication Date : 19/12/2014

(54) Title of the invention : POWER SAVE PROXY IN COMMUNICATION NETWORKS

(51) International classification :H04L12/12
(31) Priority Document No :61/509876
(32) Priority Date :20/07/2011
(33) Name of priority country :U.S.A.
(86) International Application No :PCT/US2012/047714
Filing Date :20/07/2012
(87) International Publication No :WO 2013/013198
(61) Patent of Addition to Application Number :NA
Filing Date :NA
(62) Divisional to Application Number :NA
Filing Date :NA

(71)**Name of Applicant :**
1)QUALCOMM INCORPORATED
Address of Applicant :5775 Morehouse Drive San Diego CA 92121 U.S.A.
(72)**Name of Inventor :**
1)KATAR Srinivas
2)YONGE Lawrence W. III
3)KRISHNAM Manjunath Anandarama

(57) Abstract :
Power save proxy functionality can be implemented to enable power save devices to switch to a power save mode and still receive communications from legacy communication devices. A first communication device determines that a second communication device is in a power save mode. The first communication device designates itself as a power save proxy for the second communication device that is in the power save mode. In response to detecting packets that are transmitted from a legacy communication device to the second communication device the first communication device transmits a control message to the second communication device to request the second communication device to exit the power save mode transmits a hold control message to the legacy communication device to request the legacy communication device to temporarily stop transmitting packets to the second communication device or stores the packets intended for the second communication device.

No. of Pages : 61 No. of Claims : 33

(12) PATENT APPLICATION PUBLICATION
(19) INDIA
(22) Date of filing of Application :22/01/2013
(21) Application No.282/CHE/2013 A
(43) Publication Date : 19/12/2014

(54) Title of the invention : INJECTION MOLDING MACHINE SYSTEM, INJECTION MOLDING MACHINE, AND POWER DISTRIBUTOR

(51) International classification	:B29C
(31) Priority Document No	:2012-014345
(32) Priority Date	:26/01/2012
(33) Name of priority country	:Japan
(86) International Application No	:NA
Filing Date	:NA
(87) International Publication No	: NA
(61) Patent of Addition to Application Number	:NA
Filing Date	:NA
(62) Divisional to Application Number	:NA
Filing Date	:NA

(71)**Name of Applicant :**
1)SUMITOMO HEAVY INDUSTRIES, LTD.
Address of Applicant :1-1, OSAKI 2-CHOME, SHINAGAWA-KU, TOKYO 141-6025 Japan
(72)**Name of Inventor :**
1)NORITAKA OKADA

(57) Abstract :
An injection molding machine system includes multiple injection molding machines and a power distributor configured to supply electric power to the injection molding machines. The power distributor includes an electric power accumulating part configured to store electric power regenerated by the injection molding machines.

No. of Pages : 50 No. of Claims : 16

(12) PATENT APPLICATION PUBLICATION
(19) INDIA
(22) Date of filing of Application :03/07/2013
(21) Application No.5226/CHENP/2013 A
(43) Publication Date : 19/12/2014

(54) Title of the invention : DEVICE AND METHOD OF MANUFACTURING SOIL CEMENT FOR RESTORING WASTED QUARRY

(51) International classification :B28C9/02,B28C7/06,B28C5/00
(31) Priority Document No :1020110004852
(32) Priority Date :18/01/2011
(33) Name of priority country :Republic of Korea
(86) International Application No :PCT/KR2012/000404
Filing Date :18/01/2012
(87) International Publication No :WO 2012/099380
(61) Patent of Addition to Application Number :NA
Filing Date :NA
(62) Divisional to Application Number :NA
Filing Date :NA

(71)**Name of Applicant :**
1)YOU Jong Hee
Address of Applicant :Heungun Samchun 2cha apt 203dong 1104ho #289 5 Samcheon dong 1 ga Wansan gu Jeonju si Jeonbuk 560 799 Republic of Korea
(72)**Name of Inventor :**
1)YOU Jong Hee

(57) Abstract :
The present invention relates to a device and a method for manufacturing soil cement that is used to restore into the original shape a region having topographical damage such as a quarry and to a device and a method for manufacturing soil cement that is used in a wasted quarry wherein the device comprises: a sludge hopper having a stirrer; a screw conveyor which conveys discharged sludge from said sludge hopper; a stabilizer tank which provides stabilizers for said sludge; a solidifier silo which provides a solidifier in order to solidify a mixture in which said sludge and the stabilizers are mixed; a mixer which mixes crushes and stirs the mixture of said sludge mixture and the solidifier; a ferrous sulfate tank and a deodorant tank which are neutralizers provided to neutralize and deodorize the mixture of said mixer; an air compressor which provides air to the solidifier silo in order to smoothly convey powder of said solidifier; and a deodorizer which collects and deodorizes odors created in the mixing step of said mixer. Further the method comprises the steps of: storing a solidifier; storing sewage waste water and processed sludge; stirring the sludge; mixing the sludge with stabilizers; conveying the mixture of said sludge; providing air to the solidifier; conveying the solidifier; mixing the solidifier; mixing and crushing the mixture of the mixed solidifier and the sludge; providing neutralizers and a deodorizer to the mixture of the mixed solidifier and the mixed sludge; and collecting and deodorizing odors created in the mixing step of said mixture.

No. of Pages : 14 No. of Claims : 3

(12) PATENT APPLICATION PUBLICATION
(19) INDIA
(22) Date of filing of Application :22/01/2014
(21) Application No.544/CHENP/2014 A
(43) Publication Date : 19/12/2014

(54) Title of the invention : SYSTEMS AND METHODS TO CAPTURE A STEREOSCOPIC IMAGE PAIR

(51) International classification :H04N13/02
(31) Priority Document No :13/208838
(32) Priority Date :12/08/2011
(33) Name of priority country :U.S.A.
(86) International Application No :PCT/US2012/049754
Filing Date :06/08/2012
(87) International Publication No :WO 2013/025391
(61) Patent of Addition to Application Number :NA
Filing Date :NA
(62) Divisional to Application Number :NA
Filing Date :NA

(71)**Name of Applicant :**
1)QUALCOMM INCORPORATED
Address of Applicant :ATTN: International IP Administration 5775 Morehouse Drive San Diego CA 92121 1714 U.S.A.
(72)**Name of Inventor :**
1)HUNG Szepo Robert
2)VELARDE Ruben M.
3)OSBORNE Thomas Wesley
4)LIANG Liang

(57) Abstract :
Described are a system apparatus and method to capture a stereoscopic image pair using an imaging device with a single imaging sensor. Particularly discussed are systems and methods for capturing a first and second image through an image sensor determining a vertical and horizontal disparity between the two images and applying corrections for geometric distortion vertical disparity and convergence between the two images. Some embodiments contemplate displaying a directional indicator before the second image of the stereoscopic image pair is captured. By displaying a directional indicator a more optimal position for the second image of the stereoscopic image pair may be found resulting in a higher quality stereoscopic image pair.

No. of Pages : 40 No. of Claims : 24

(12) PATENT APPLICATION PUBLICATION
(19) INDIA
(22) Date of filing of Application :12/02/2013
(21) Application No.575/CHE/2013 A
(43) Publication Date : 19/12/2014

(54) Title of the invention : MULTILAYER MOULDED FOAM STRUCTURE FOR VEHICLE COMPONENTS

(51) International classification :B29D
(31) Priority Document No :NA
(32) Priority Date :NA
(33) Name of priority country :NA
(86) International Application No :NA
Filing Date :NA
(87) International Publication No : NA
(61) Patent of Addition to Application Number :NA
Filing Date :NA
(62) Divisional to Application Number :NA
Filing Date :NA

(71)**Name of Applicant :**
1)TRACTORS AND FARM EQUIPMENT LIMITED
Address of Applicant :NO. 861, ANNASALAI, CHENNAI 600 002 Tamil Nadu India
(72)**Name of Inventor :**
1)RAKESH BAHADUR VERMA
2)RAVINDRAN VIJAYKUMAR

(57) Abstract :
The present invention discloses a multilayer acoustic molded foam structure (MF) The acoustic molded foam structure (MF), comprises a layer of non-woven fabric (NW). A first adhesive layer (A1) made of water insoluble adhesive is provided as an intermediary layer between a layer of non-woven fabric (NW) and Poly Vinyl Chloride Foil Layer (P2) ensuring strong adhesion between the layer (NW) and Foil Layer (P2) solving the problem(s) of peeling and instability of the prior art multilayer foam structures. Layer (P2) prevents water ingress and increases transmission loss. A second reinforcing adhesive layer (A2) made of water insoluble adhesive is provided as an intermediate layer between the layer of Poly Vinyl Chloride (PVC) Foil Layer (P2) and Polyurethane Foam Layer (P1) further solving the problem(s) of peeling and instability of the prior art multilayer foam structures. Over the Polyurethane Foam Layer (P1), a transfer coat layer (T) is provided.

No. of Pages : 11 No. of Claims : 6

(12) PATENT APPLICATION PUBLICATION
(19) INDIA
(22) Date of filing of Application :13/06/2013
(21) Application No.2563/CHE/2013 A
(43) Publication Date : 19/12/2014

(54) Title of the invention : MEAT BASED HIGH PROTEIN AND LOW FAT MEAL MAKER AND THE PROCESS FOR THE PREPARATION THEREOF

(51) International classification :A23L1/325
(31) Priority Document No :NA
(32) Priority Date :NA
(33) Name of priority country :NA
(86) International Application No :NA
Filing Date :NA
(87) International Publication No : NA
(61) Patent of Addition to Application Number :NA
Filing Date :NA
(62) Divisional to Application Number :NA
Filing Date :NA

(71)**Name of Applicant :**
1)NATIONAL RESEARCH CENTRE ON MEAT
Address of Applicant :CHENGICHERLA, PO BOX NO.19, BODA UPPAL POST, HYDERABAD, 500 092 Andhra Pradesh India
(72)**Name of Inventor :**
1)MUTHUSAMY MUTHULAKSHMI
2)MUTHUPALANI MUTHUKUMAR
3)RACHARLA SOLOMON RAJKUMAR
4)BASAPPA MAHESWARAPPA NAVEENA

(57) Abstract :
The invention relates to a meat based high protein and low fat meal maker and the process for the preparation of the same. The meat based high protein and low fat meal maker comprises of meat, whole egg liquid, wheat flour, vegetable oil, spice mix, salt, sugar, condiments, sodium tri ploy phosphate, sodium nitrite and ice. Further, the invention relates to a process of preparing the meat based high protein and low fat meal maker comprising chopping the meat and mixing the chopped meat the other ingredients to obtain an emulsion. The said emulsion is then molded into balls of uniform shape which are then microwave cooked to obtain the meat based high protein and low fat meal maker.

No. of Pages : 18 No. of Claims : 10

(12) PATENT APPLICATION PUBLICATION
(19) INDIA
(22) Date of filing of Application :17/06/2013
(21) Application No.2631/CHE/2013 A
(43) Publication Date : 19/12/2014

(54) Title of the invention : METHOD AND APPARATUS FOR MANFACTURING HOLLOW BODIES

(51) International classification :B22C
(31) Priority Document No :NA
(32) Priority Date :NA
(33) Name of priority country :NA
(86) International Application No :NA
Filing Date :NA
(87) International Publication No : NA
(61) Patent of Addition to Application Number :648/CHE/2013
Filed on :14/02/2013
(62) Divisional to Application Number :NA
Filing Date :NA

(71)**Name of Applicant :**
1)MAKROCAST PVT. LTD.
Address of Applicant :R.S.NO-612/2AB, ZILLAPARISHED ROAD, KOLAVENNU(P), KANKIPADU MANDAL, KRISHNA DIST - 521 153 Andhra Pradesh India
(72)**Name of Inventor :**
1)KIRAN BABU PALLAGANI

(57) Abstract :
The present invention comprises an improvement of the invention claimed in Indian Patent Application Numbered 648/CHE/2013. The present invention relates to a method of manufacturing hollow bodies by means of centrifugal casting technique using sand core of improved configuration. More specifically, the present invention relates to a method for manufacturing hollow bodies like cylinder liner by means of centrifugal casting technique using sand core without taper in its inner cylindrical wall. The improved sand core reduces the weight of casting by 100 grams and improves casting quality. Further, the present invention relates to an apparatus for manufacturing improved cylinder liner with taper removed.

No. of Pages : 21 No. of Claims : 6

(12) PATENT APPLICATION PUBLICATION
(19) INDIA
(22) Date of filing of Application :24/05/2012
(21) Application No.4569/CHENP/2012 A
(43) Publication Date : 19/12/2014

(54) Title of the invention : PORTABLE INFORMATION TERMINAL

(51) International classification :G06F3/048,G06F3/041,G06F3/14
(31) Priority Document No :2009-248067
(32) Priority Date :28/10/2009
(33) Name of priority country :Japan
(86) International Application No :PCT/JP2010/065479
Filing Date :09/09/2010
(87) International Publication No :WO 2011/052299 A1
(61) Patent of Addition to Application Number :NA
Filing Date :NA
(62) Divisional to Application Number :NA
Filing Date :NA

(71)**Name of Applicant :**
1)NEC CORPORATION
Address of Applicant :7-1, SHIBA 5-CHOME, MINATO-KU, TOKYO 108-8001 Japan
(72)**Name of Inventor :**
1)TOMIMORI, HIROYUKI

(57) Abstract :
A display section (2000) that has a plurality of display screens comprises: a touch panel type input section (3000) that senses touches on said display screens; and a control section (1000) that causes any one of the two display screens to display a predetermined portion that lies on two display screens of said plurality of display screens based on a touch operation on the display screens.

No. of Pages : 57 No. of Claims : 25

(12) PATENT APPLICATION PUBLICATION
(19) INDIA
(22) Date of filing of Application :22/01/2014
(21) Application No.545/CHENP/2014 A
(43) Publication Date : 19/12/2014

(54) Title of the invention : TOUCH SENSING INTEGRATED WITH DISPLAY DATA UPDATES

(51) International classification :G06F3/041
(31) Priority Document No :13/207024
(32) Priority Date :10/08/2011
(33) Name of priority country :U.S.A.
(86) International Application No :PCT/US2012/050002
Filing Date :08/08/2012
(87) International Publication No :WO 2013/022977
(61) Patent of Addition to Application Number :NA
Filing Date :NA
(62) Divisional to Application Number :NA
Filing Date :NA

(71)**Name of Applicant :**
1)QUALCOMM MEMS TECHNOLOGIES INC.
Address of Applicant :5775 Morehouse Drive San Diego California 92121 U.S.A.
(72)**Name of Inventor :**
1)ELLOWAY Donald J.
2)MIGNARD Marc M.
3)CUMMINGS William J.
4)MARTIN Russel A.

(57) Abstract :
This disclosure provides systems methods and apparatus for touch sensing on a display device. In one aspect a method is provided for reducing electrical interference on a display including bi stable display elements and touch sensing elements without a grounded shielding layer between display elements and touch sensing elements. The method may include placing at least a portion of an array of bi stable display elements in a selected state with display driver circuitry maintaining the display elements in the selected state and obtaining a signal from a touch sensing element using touch sensing driver circuitry different from the display driver circuitry when the display elements remain in the selected state.

No. of Pages : 53 No. of Claims : 28

(12) PATENT APPLICATION PUBLICATION
(19) INDIA
(22) Date of filing of Application :12/08/2011
(21) Application No.5869/CHENP/2011 A
(43) Publication Date : 19/12/2014

(54) Title of the invention : HETERO RING DERIVATIVE

(51) International classification :C07D403/04
(31) Priority Document No :2009-029759
(32) Priority Date :12/02/2009
(33) Name of priority country :Japan
(86) International Application No :PCT/JP2010/051910
Filing Date :10/02/2010
(87) International Publication No :WO 2010/092962 A1
(61) Patent of Addition to Application Number :NA
Filing Date :NA
(62) Divisional to Application Number :NA
Filing Date :NA

(71)**Name of Applicant :**
1)ASTELLAS PHARMA INC.
Address of Applicant :3-11, NIHONBASHI-HONCHO 2-CHOME, CHUO-KU, TOKYO 1038411 Japan
(72)**Name of Inventor :**
1)TAKAHASHI, FUMIT
2)IMADA, SUNAO
3)SHIWAKU, MASAHIKO (DECEASED)
4)SHIWAKU, YASUMASA AND SHIWAKU, ATSUKO (LEGAL HEIRS OF SHIWAKU, MASAHIKO (DECEASED)
5)KATO, KOJI
6)FUKAHORI, HIDEHIKO

(57) Abstract :
A novel and excellent method for preventing or treating rejection in the transplantation of various organs, allergy diseases, autoimmune diseases, hematologic tumor, or the like, based on a PDK5-selective inhibitory action and/or an IL-2 production inhibitory action, and/or a B cell proliferation inhibitory action (including an activation inhibitory action), is provided [Means for Solution] It was found that a 3-substituted triazine or 3-substituted pyrimidine derivative exhibits a PI3K5-selective inhibitory action, and/or an EL-2 production inhibitory action, and/or a B cell proliferation inhibitory action (including an activation inhibitory action), and can be an agent for preventing or treating rejection in the transplantation of various /\ 15 organs, allergy diseases (asthma, atopic dermatitis, etc.), autoimmune diseases (rheumatoid arthritis, psoriasis, ulcerative colitis, Crohn's disease, systemic lupus erythematosus, etc.), hematologic tumor (leukemia etc.), or the like, thereby completing the present invention.

No. of Pages : 233 No. of Claims : 15

(12) PATENT APPLICATION PUBLICATION
(19) INDIA
(22) Date of filing of Application :27/11/2012
(21) Application No.10001/CHENP/2012 A
(43) Publication Date : 19/12/2014

(54) Title of the invention : INNOVATIVE DISCOVERY OF THERAPEUTIC DIAGNOSTIC AND ANTIBODY COMPOSITIONS RELATED TO PROTEIN FRAGMENTS OF P38 MULTI-TRNA SYNTHETASE COMPLEX

(51) International classification	:A61K38/17,A61K39/395,A61P29/00
(31) Priority Document No	:61/331,063
(32) Priority Date	:04/05/2010
(33) Name of priority country	:U.S.A.
(86) International Application No	:PCT/US2011/035251
Filing Date	:04/05/2011
(87) International Publication No	:WO/2011/140267
(61) Patent of Addition to Application Number	:NA
Filing Date	:NA
(62) Divisional to Application Number	:NA
Filing Date	:NA

(71)**Name of Applicant :**
1)ATYR PHARMA INC.
Address of Applicant :3545 John Hopkins Court Suite #250 San Diego California 92121 United States of America
(72)**Name of Inventor :**
1)GREENE Leslie Ann
2)CHIANG Kyle P.
3)VASSEROT Alain P.
4)WATKINS Jeffry D.
5)MENDLEIN John D.
6)QUINN Cheryl L.

(57) Abstract :
Provided are compositions comprising newly identified protein fragments of aminoacyl-tRNA synthetases polynucleotides that encode them and complements thereof related agents and methods of use thereof in diagnostic drug discovery research and therapeutic applications.

No. of Pages : 222 No. of Claims : 125

(12) PATENT APPLICATION PUBLICATION
(19) INDIA
(22) Date of filing of Application :27/11/2012
(21) Application No.10002/CHENP/2012 A
(43) Publication Date : 19/12/2014

(54) Title of the invention : INNOVATIVE DISCOVERY OF THERAPEUTIC DIAGNOSTIC AND ANTIBODY COMPOSITIONS RELATED TO PROTEIN FRAGMENTS OF GLUTAMYL-PROLYL-TRNA SYNTHETASES

(51) International classification :A61K38/08
(31) Priority Document No :61/331,084
(32) Priority Date :04/05/2010
(33) Name of priority country :U.S.A.
(86) International Application No :PCT/US2011/035250
Filing Date :04/05/2011
(87) International Publication No :WO/2011/140266
(61) Patent of Addition to Application Number :NA
Filing Date :NA
(62) Divisional to Application Number :NA
Filing Date :NA

(71)**Name of Applicant :**
1)ATYR PHARMA INC.
Address of Applicant :3545 John Hopkins Court Suite #250 San Diego California 92121 United States of America
2)PANGU BIOPHARMA LIMITED
(72)**Name of Inventor :**
1)GREENE Leslie Ann
2)CHIANG Kyle P.
3)HONG Fei
4)VASSEROT Alain P.
5)LO Wing-Sze
6)WATKINS Jeffry D.
7)MENDLEIN John D.
8)QUINN Cheryl L.

(57) Abstract :
Provided are compositions comprising newly identified protein fragments of aminoacyl-tRNA synthetases polynucleotides that encode them and complements thereof related agents and methods of use thereof in diagnostic drug discovery research and therapeutic applications.

No. of Pages : 327 No. of Claims : 125

(12) PATENT APPLICATION PUBLICATION
(19) INDIA
(22) Date of filing of Application :19/12/2012
(21) Application No.10573/CHENP/2012 A
(43) Publication Date : 19/12/2014

(54) Title of the invention : NOVEL PEPTIDES FOR WOUND HEALING

(51) International classification :C07K14/47,A61K38/17,C07F13/00
(31) Priority Document No :10165800.3
(32) Priority Date :14/06/2010
(33) Name of priority country :EPO
(86) International Application No :PCT/EP2011/059858
Filing Date :14/06/2011
(87) International Publication No :WO/2011/157716
(61) Patent of Addition to Application Number :NA
Filing Date :NA
(62) Divisional to Application Number :NA
Filing Date :NA

(71)**Name of Applicant :**
1)GENE SIGNAL INTERNATIONAL SA
Address of Applicant :Parc Scientifique EPFL PSE-A CH-1015 Lausanne Switzerland
(72)**Name of Inventor :**
1)AL-MAHMOOD Salman
2)COLIN Sylvie

(57) Abstract :
The present invention relates to new peptides pharmaceutical composition and cosmetic composition comprising them and their use for wound healing.

No. of Pages : 41 No. of Claims : 15

(12) PATENT APPLICATION PUBLICATION
(19) INDIA
(22) Date of filing of Application :19/12/2012

(21) Application No.10574/CHENP/2012 A
(43) Publication Date : 19/12/2014

(54) Title of the invention : DRIVER CIRCUIT

(51) International classification :H03K4/94,B41J2/045,H01L41/04
(31) Priority Document No :1009150.2
(32) Priority Date :01/06/2010
(33) Name of priority country :U.K.
(86) International Application No :PCT/GB2011/051025
Filing Date :31/05/2011
(87) International Publication No :WO/2011/151642
(61) Patent of Addition to Application Number :NA
Filing Date :NA
(62) Divisional to Application Number :NA
Filing Date :NA

(71)**Name of Applicant :**
1)GLOBAL INKJET SYSTEMS LIMITED
Address of Applicant :The Jeffreys Building Cowley Road Cambridge Cambridgeshire CB4 0DS United Kingdom
(72)**Name of Inventor :**
1)PENBERTH Michael

(57) Abstract :
A driver circuit (1) for driving a capacitive load (2) with a drive pulse having a rise time a predetermined voltage period and a fall time. The driver circuit (1) includes an inductance (6) switches (10 11 12) and a transformer (8) having a primary side (8) and secondary side (9). The switches (10 11 12) are controlled by a controller (13) to charge the inductance (6) from a power supply (4) and when the capacitive load (2) is to be driven to enable a charge path from the inductance (6) to the capacitive load (2) during the rise time to disable the charge path during the constant peak voltage period and to enable a discharge path ....

No. of Pages : 14 No. of Claims : 11

(12) PATENT APPLICATION PUBLICATION
(19) INDIA
(22) Date of filing of Application :19/12/2012
(21) Application No.10575/CHENP/2012 A
(43) Publication Date : 19/12/2014

(54) Title of the invention : METHODS AND PHARMACEUTICAL COMPOSITIONS FOR THE TREATMENT OF RESPIRATORY TRACT INFECTIONS

(51) International classification :A61K38/16,A61P11/00,A61P31/04
(31) Priority Document No :NA
(32) Priority Date :NA
(33) Name of priority country :NA
(86) International Application No :PCT/IB2010/001911
Filing Date :25/06/2010
(87) International Publication No :WO/2011/161491
(61) Patent of Addition to Application Number :NA
Filing Date :NA
(62) Divisional to Application Number :NA
Filing Date :NA

(71)**Name of Applicant :**
1)INSERM (INSTITUT NATIONAL DE LA SANT‰ ET DE LA RECHERCHE M‰DICALE)
Address of Applicant :101 rue de Tolbiac F-75013 Paris France
2)INSTITUT PASTEUR DE LILLE
(72)**Name of Inventor :**
1)SIRARD Jean-Claude
2)CHABALGOITY Jose A.

(57) Abstract :
The present invention relates to methods and pharmaceutical compositions for the treatment of respiratory tract infections. More particularly the present invention relates to a TLR5 agonist for use in a method for treating a respiratory tract infection.

No. of Pages : 37 No. of Claims : 24

(12) PATENT APPLICATION PUBLICATION
(19) INDIA
(22) Date of filing of Application :19/12/2012
(21) Application No.10576/CHENP/2012 A
(43) Publication Date : 19/12/2014

(54) Title of the invention : NOVEL IMMUNOADJUVANT COMPOUNDS AND USES THEREOF

(51) International classification :A61K39/39
(31) Priority Document No :10305596.8
(32) Priority Date :04/06/2010
(33) Name of priority country :EPO
(86) International Application No :PCT/EP2011/059287
Filing Date :06/06/2011
(87) International Publication No :WO/2011/151471
(61) Patent of Addition to Application Number :NA
Filing Date :NA
(62) Divisional to Application Number :NA
Filing Date :NA

(71)**Name of Applicant :**
1)INSERM (INSTITUT NATIONAL DE LA SANT‰ ET DE LA RECHERCHE M‰DICALE)
Address of Applicant :101 rue de Tolbiac F-75013 Paris France
2)CENTRE NATIONAL DE LA RECHERCHE SCIENTIFIQUE (CNRS)
3)UNIVERSITE DAIX-MARSEILLE
(72)**Name of Inventor :**
1)GORVEL Jean-Pierre
2)BANCHEREAU Jacques
3)MARTIROSYAN Anna
4)KLECHEVSKY Eynav
5)OH Sangkon

(57) Abstract :
The present invention relates to a cyclic beta glucan compound for use as an immuno adjuvant and vaccine composition comprising thereof. These novel adjuvant compounds represent in particular a new class of dendritic cell activating molecules.

No. of Pages : 45 No. of Claims : 10

(12) PATENT APPLICATION PUBLICATION
(19) INDIA
(22) Date of filing of Application :13/06/2013
(21) Application No.2571/CHE/2013 A
(43) Publication Date : 19/12/2014

(54) Title of the invention : ANTI-WRINKLE UNDER EYE COMPOSITIONS

(51) International classification :C09B
(31) Priority Document No :NA
(32) Priority Date :NA
(33) Name of priority country :NA
(86) International Application No :NA
Filing Date :NA
(87) International Publication No : NA
(61) Patent of Addition to Application Number :NA
Filing Date :NA
(62) Divisional to Application Number :NA
Filing Date :NA

(71)**Name of Applicant :**
1)Dr. Reddy™s Laboratories Limited
Address of Applicant :8-2-337, Road No. 3, Banjara hills, Hyderabad, Andhra Pradesh, India.
(72)**Name of Inventor :**
1)Manoj Kumar Soni
2)Chinmoy Roy

(57) Abstract :
An anti-wrinkle under eye composition comprising peptides, a flavonoid, a chelating agent, a skin lightening agent, an exfoliating agent, a skin protectant and one or more dermatologically acceptable excipients.

No. of Pages : 21 No. of Claims : 10

(12) PATENT APPLICATION PUBLICATION
(19) INDIA
(22) Date of filing of Application :18/08/2011
(21) Application No.5933/CHENP/2011 A
(43) Publication Date : 19/12/2014

(54) Title of the invention : ISOXAZOLE-ISOXAZOLE AND ISOXAZOLE-ISOTHIAZOLE DERIVATIVES

(51) International classification :C07D261/18
(31) Priority Document No :09153162.4
(32) Priority Date :19/02/2009
(33) Name of priority country :EPO
(86) International Application No :PCT/EP2010/051890
Filing Date :16/02/2010
(87) International Publication No :WO 2010/094669 A1
(61) Patent of Addition to Application Number :NA
Filing Date :NA
(62) Divisional to Application Number :NA
Filing Date :NA

(71)**Name of Applicant :**
1)F. HOFFMANN-LA ROCHE AG
Address of Applicant :124 GRENZACHERSTRASSE, CH-4070 BASEL Switzerland
(72)**Name of Inventor :**
1)HERNANDEZ, MARIA-CLEMENCIA
2)JAKOB-ROETNE, ROLAND
3)LUCAS, MATTHEW C.
4)THOMAS, ANDREW

(57) Abstract :
The present invention is concerned with isoxazole-isoxazole and isoxazole-isothiazole derivatives of formula I, having affinity and selectivity for GAB A A a5 receptor, their manufacture, pharmaceutical compositions containing them and their use as medicaments. The active compounds of the present invention are useful as cognitive enhancer or for the therapeutic and/or prophylactic treatment of cognitive disorders like Alzheimer's disease.

No. of Pages : 88 No. of Claims : 28

(12) PATENT APPLICATION PUBLICATION
(19) INDIA
(22) Date of filing of Application :23/12/2013
(21) Application No.10212/CHENP/2013 A
(43) Publication Date : 19/12/2014

(54) Title of the invention : MUCOSAL DELIVERY OF DRUGS

(51) International classification :A61K47/14,A61K47/24,A61K47/28
(31) Priority Document No :11004319.7
(32) Priority Date :25/05/2011
(33) Name of priority country :EPO
(86) International Application No :PCT/EP2012/059890
Filing Date :25/05/2012
(87) International Publication No :WO 2012/160203
(61) Patent of Addition to Application Number :NA
Filing Date :NA
(62) Divisional to Application Number :NA
Filing Date :NA

(71)**Name of Applicant :**
1)ARISGEN SA
Address of Applicant :14 Chemin des Aulx CH 1228 Plan les Ouates Switzerland
(72)**Name of Inventor :**
1)BOTTI Paolo
2)TCHERTCHIAN Sylvie

(57) Abstract :
The present invention provides a composition comprising or consisting of components (a) (i) at least one mono alkanoyl glycerol ester wherein alkanoyl is selected from C to C alkanoyl preferably from octanoyl and decanoyl; and (b) (i) at least one compound selected from cholesterol phosphatidyl cholines and phosphatidyl glycerols wherein the acyl moieties of the phosphatidyl moieties are independently selected from C to C alkanoyi and C to C alkenoyl.

No. of Pages : 57 No. of Claims : 15

(12) PATENT APPLICATION PUBLICATION
(19) INDIA
(22) Date of filing of Application :02/01/2013
(21) Application No.12/CHE/2013 A
(43) Publication Date : 19/12/2014

(54) Title of the invention : BI-DIRECTIONAL HYDRAULIC FAN REGULATING SYSTEM FOR RADIATOR OF AGRICULTURAL VEHICLE

(51) International classification	:F01P	(71)**Name of Applicant :**
(31) Priority Document No	:NA	**1)TRACTORS AND FARM EQUIPMENT LIMITED**
(32) Priority Date	:NA	Address of Applicant :NO. 861, ANNASALAI, CHENNAI - 600 002 Tamil Nadu India
(33) Name of priority country	:NA	
(86) International Application No	:NA	(72)**Name of Inventor :**
Filing Date	:NA	**1)S. JAYAKANNA**
(87) International Publication No	: NA	
(61) Patent of Addition to Application Number	:NA	
Filing Date	:NA	
(62) Divisional to Application Number	:NA	
Filing Date	:NA	

(57) Abstract :

A system for controlling the direction of rotation and time of rotation of a fan (7) connected to a radiator (8) in an agricultural vehicle is disclosed. In said fan regulating system, the radiator fins are cooled by air when the fan (7) rotates in a first direction and the dust deposited on the radiator fins is exhausted during the rotation of the fan (7) in a second direction that is opposite to the first direction. In order to achieve this bidirectional rotation, the present invention discloses an engine (1) driven pump (2) that is used to drive a hydraulic fan driving unit which is in turn coupled to the fan (7). The reversing of the fan rotation direction is performed for a specific duration through a direction controller (5) implemented as a solenoid controlled directional control valve. Further, the duration is regulated through a time controller (12).

No. of Pages : 19 No. of Claims : 15

(12) PATENT APPLICATION PUBLICATION
(19) INDIA
(22) Date of filing of Application :18/08/2011
(21) Application No.6110/CHENP/2011 A
(43) Publication Date : 19/12/2014

(54) Title of the invention : 1,2,4-THIADIAZOLE COMPOUNDS AND PESTS CONTROLLING COMPOSITION CONTAINING THE SAME

(51) International classification :C07D285/08
(31) Priority Document No :2003-354758
(32) Priority Date :15/10/2003
(33) Name of priority country :Japan
(86) International Application No :PCT/JP2004/14540
Filing Date :27/09/2004
(87) International Publication No :WO/2005/037805
(61) Patent of Addition to Application Number :NA
Filing Date :NA
(62) Divisional to Application Number :1272/CHENP/2006
Filed on :27/09/2004

(71)**Name of Applicant :**
1)SUMITOMO CHEMICAL COMPANY LIMITED
Address of Applicant :27-1, SHNKAWA 2-CHOME, CHUO-KA, TOKYO 104-8260 Japan
(72)**Name of Inventor :**
1)IHARA, HIDEKI
2)TAKAOKA, DAISUKE
3)MIZUNO, HAJIME

(57) Abstract :
The present invention relates to a 1,2,4-thiadiazole compound of the formula (I): wherein R' represents C3-C7 alkynyl; X represents C4-C7 straight alkylene optionally substituted with one to four of R2, C4-C7 straight alkenylene optionally substituted with one to four of R2, ethylene-oxy-ethylene optionally substituted with one to four of R4, or ethylene-thio-ethylene optionally substituted with one to four of R4; R2 represents a halogen atom, trifluoromethyl or C1-C4 alkyl; and R4 represents a fluorine atom or C1-C3 alkyl.

No. of Pages : 55 No. of Claims : 7

(12) PATENT APPLICATION PUBLICATION
(19) INDIA
(22) Date of filing of Application :24/01/2014
(21) Application No.623/CHENP/2014 A
(43) Publication Date : 19/12/2014

(54) Title of the invention : SUSPENSION AND/OR THROTTLING OF PROCESSES FOR CONNECTED STANDBY

(51) International classification :G06F1/32,G06F9/06
(31) Priority Document No :13/207118
(32) Priority Date :10/08/2011
(33) Name of priority country :U.S.A.
(86) International Application No :PCT/US2011/055452
Filing Date :07/10/2011
(87) International Publication No :WO 2013/022462
(61) Patent of Addition to Application Number :NA
Filing Date :NA
(62) Divisional to Application Number :NA
Filing Date :NA

(71)**Name of Applicant :**
1)MICROSOFT CORPORATION
Address of Applicant :One Microsoft Way Redmond Washington 98052 6399 U.S.A.
(72)**Name of Inventor :**
1)BERRY Jon

(57) Abstract :
One or more techniques and/or systems are provided for assigning power management classifications to a process transitioning a computing environment into a connected standby state based upon power management classifications assigned to processes and transitioning the computing environment from the connected standby state to an execution state. That is power management classifications such as exempt throttle and/or suspend may be assigned to processes based upon various factors such as whether a process provides desired functionality and/or whether the process provides functionality relied upon for basic operation of the computing environment. In this way the computing environment may be transitioned into a low power connected standby state that may continue executing desired functionality while reducing power consumption by suspending and/or throttling other functionality. Because some functionality may still execute the computing environment may transition into the execution state in a responsive manner to quickly provide a user with up to date information.

No. of Pages : 37 No. of Claims : 15

(12) PATENT APPLICATION PUBLICATION
(19) INDIA
(22) Date of filing of Application :13/06/2013
(21) Application No.2569/CHE/2013 A
(43) Publication Date : 19/12/2014

(54) Title of the invention : OIL COOLER FOR A MOTORCYCLE

(51) International classification :F01M
(31) Priority Document No :NA
(32) Priority Date :NA
(33) Name of priority country :NA
(86) International Application No :NA
Filing Date :NA
(87) International Publication No : NA
(61) Patent of Addition to Application Number :NA
Filing Date :NA
(62) Divisional to Application Number :NA
Filing Date :NA

(71)**Name of Applicant :**
1)TVS MOTOR COMPANY LIMITED
Address of Applicant :JAYALAKSHMI ESTATES, 29, (OLD NO.8) HADDOWS ROAD, CHENNAI - 600 006. Tamil Nadu India
(72)**Name of Inventor :**
1)MEGHASHYAM DIGHOLE
2)SIVAKUMAR ARUMUGAM
3)ABHISHEK AMIT AGRAWAL
4)MOHN SUDARSHAN

(57) Abstract :
Given description discloses a surrounding member for an oil cooler which is having a specific structure for collecting and redirecting flowing air in the oil cooler and also protects oil cooler from harmful foreign elements. This surrounding member has top deflector, side deflector on left and right side and one flexible bottom deflector. These deflectors are positioned in such a way that these collects larger amount of incoming air and redirects it to the oil cooler front resulting in enhancement of cooling of circulating oil. A grill is fixed in the area surrounded by the deflectors such that it remains in the front of the oil cooler and hence it provides protection of air cooler from the harmful foreign elements.

No. of Pages : 15 No. of Claims : 5

(12) PATENT APPLICATION PUBLICATION
(19) INDIA
(22) Date of filing of Application :12/06/2013
(21) Application No.4504/CHENP/2013 A
(43) Publication Date : 19/12/2014

(54) Title of the invention : APPARATUS FOR COLLECTING SUSPENDED MATTER IN A RIVER

(51) International classification :E02B15/04
(31) Priority Document No :1020100122121
(32) Priority Date :02/12/2010
(33) Name of priority country :Republic of Korea
(86) International Application No :PCT/KR2011/008941
Filing Date :23/11/2011
(87) International Publication No :WO 2012/074240
(61) Patent of Addition to Application Number :NA
Filing Date :NA
(62) Divisional to Application Number :NA
Filing Date :NA

(71)**Name of Applicant :**
1)CHOI Dong Ju
Address of Applicant :#291 3 Yongsan dong Dong gu Gwangju 501 832 Republic of Korea
2)CHOI Dong Lim
(72)**Name of Inventor :**
1)CHOI Dong Ju
2)CHOI Dong Lim

(57) Abstract :
During the monsoon season various forms of suspended matter such as garbage or mold forms and construction materials flow downriver and accumulate at bridges and the like which causes flooding due to the flow or passage of water being impeded. When considering the great costs and manpower required for collecting the various forms of suspended matter flowing downriver which are the main reason for river pollution the present invention aims to provide an apparatus for collecting suspended matter in a river which is to be installed in a large river or stream into which the flow of suspended matter is expected. To raise collecting efficiency through continuous operation which is the special feature of the present invention a first stage collecting apparatus collects mostly large sized suspended matter by means of hooks which are circulated over the surface of the water at both sides of the river in a continuous conveyance method and a second stage collecting apparatus collects small sized suspended matter in stages using a double netting method wherein collecting nets repeatedly cross from the left to the right of the river. The first stage collecting apparatus includes an output chain gear provided on a dynamic motor unit at one location on a foundation stone at one of the sides of the river idle chain gears provided at two locations on foundation stones on the same side of the river and a high pitch chain installed at three points on the idle chain gears via attachment bolts so as to securely support the apparatus even under strong current conditions. The mesh of the selected collecting net of the second stage collecting apparatus is formed so as to have openings with various sizes for different types of suspended matter thereby ultimately collecting the suspended matter which was not collected by the first stage collecting apparatus thus providing an environmentally friendly apparatus for collecting suspended matter in a river that is easy to install and remove.

No. of Pages : 23 No. of Claims : 2

(12) PATENT APPLICATION PUBLICATION
(19) INDIA
(22) Date of filing of Application :24/01/2014
(21) Application No.625/CHENP/2014 A
(43) Publication Date : 19/12/2014

(54) Title of the invention : SUSPENSION AND/OR THROTTLING OF PROCESSES FOR CONNECTED STANDBY

(51) International classification :G06F1/32,G06F9/44
(31) Priority Document No :13/207138
(32) Priority Date :10/08/2011
(33) Name of priority country :U.S.A.
(86) International Application No :PCT/US2011/055464
Filing Date :07/10/2011
(87) International Publication No :WO 2013/022463
(61) Patent of Addition to Application Number :NA
Filing Date :NA
(62) Divisional to Application Number :NA
Filing Date :NA

(71)**Name of Applicant :**
1)MICROSOFT CORPORATION
Address of Applicant :One Microsoft Way Redmond Washington 98052 6399 U.S.A.
(72)**Name of Inventor :**
1)BERRY Jon

(57) Abstract :
One or more techniques and/or systems are provided for assigning power management classifications to a process transitioning a computing environment into a connected standby state based upon power management classifications assigned to processes and transitioning the computing environment from the connected standby state to an execution state. That is power management classifications such as exempt throttle and/or suspend may be assigned to processes based upon various factors such as whether a process provides desired functionality and/or whether the process provides functionality relied upon for basic operation of the computing environment. In this way the computing environment may be transitioned into a low power connected standby state that may continue executing desired functionality while reducing power consumption by suspending and/or throttling other functionality. Because some functionality may still execute the computing environment may transition into the execution state in a responsive manner to quickly provide a user with up to date information.

No. of Pages : 36 No. of Claims : 15

(12) PATENT APPLICATION PUBLICATION
(19) INDIA
(22) Date of filing of Application :27/06/2013
(21) Application No.5040/CHENP/2013 A
(43) Publication Date : 19/12/2014

(54) Title of the invention : CORE FOAMS OF POLYURETHANE FOR PRODUCTION OF BLADES MORE PARTICULARLY FOR WIND POWER SYSTEMS

(51) International classification :F03D1/06,B29D99/00,C08G18/32
(31) Priority Document No :10193263.0
(32) Priority Date :01/12/2010
(33) Name of priority country :EPO
(86) International Application No :PCT/EP2011/071400
Filing Date :30/11/2011
(87) International Publication No :WO 2012/072687
(61) Patent of Addition to Application Number :NA
Filing Date :NA
(62) Divisional to Application Number :NA
Filing Date :NA

(71)**Name of Applicant :**
1)BASF SE
Address of Applicant :67056 Ludwigshafen Germany
(72)**Name of Inventor :**
1)PRISSOK Frank
2)BALBO BLOCK Marco
3)QIAN Zhenyu
4)FREIDANK Daniel
5)SCHERZER Dietrich
6)MARTIN Ingrid

(57) Abstract :
The present invention relates to a reinforced polyurethane foam having a density of above 50 to 300 g/L a density independent compressive strength of above 7.510 MPa (L/g) a density independent compressive modulus of elasticity of above 1.710 MPa (L/g) a density independent tensile strength of above 6.410 MPa (L/g) a density independent tensile modulus of elasticity of above 2.410 MPa (L/g) a density independent flexural strength of above 1.2510 MPa (L/g) and a density independent flexural modulus of elasticity of above 1.7510 MPa (L/g) obtainable by mixing (a) polyisocyanates with (b) compounds having isocyanate reactive groups (c) blowing agent comprising water and optionally (d) catalyst and (e) further additives to form a reaction mixture and curing the reaction mixture where the reaction mixture to be cured comprises 1% to 40% by weight of hollow microspheres and/or is applied to a porous reinforcing agent (f) capable of forming two dimensional or three dimensional networks in the polyurethane foam the compounds having isocyanate reactive groups (b) comprise polyetherols (b1) polyesterols (b2) chain extenders (b3) and optionally crosslinkers (b4) and aromatic polyether diols (b5) and component (b) comprises a fraction of polyesterols (b2) chain extenders (b3) and aromatic polyether diol (b5) of at least 50% by weight based on the total weight of component (b). The present invention further relates to a process for producing such reinforced polyurethane foams and to their use as reinforcing foams for load bearing stiff areal elements in the interior of blades or wings and also as insulation material for liquefied natural gas tanks.

No. of Pages : 24 No. of Claims : 17

(12) PATENT APPLICATION PUBLICATION
(19) INDIA
(22) Date of filing of Application :02/07/2012
(21) Application No.5777/CHENP/2012 A
(43) Publication Date : 19/12/2014

(54) Title of the invention : HYDRAULIC PUMP CONTROL APPARATUS AND METHOD OF CONSTRUCTION MACHINE

(51) International classification :E02F9/22,F04B27/04,E02F9/24
(31) Priority Document No :1020090130246
(32) Priority Date :23/12/2009
(33) Name of priority country :Republic of Korea
(86) International Application No :PCT/KR2010/009140
Filing Date :21/12/2010
(87) International Publication No :WO 2011/078543
(61) Patent of Addition to Application Number :NA
Filing Date :NA
(62) Divisional to Application Number :NA
Filing Date :NA

(71)**Name of Applicant :**
1)DOOSAN INFRACORE CO. LTD.
Address of Applicant :7 11 Hwasu dong Dong gu Incheon 401 020 Republic of Korea
(72)**Name of Inventor :**
1)JUNG Woo Yong

(57) Abstract :
The present invention relates to an apparatus and method for controlling a hydraulic pump of a construction machine. The disclosed apparatus of the present invention comprises: a pump control unit which controls a discharge pressure of the hydraulic pump driven by an engine wherein the pump control unit includes a set pressure value calculation unit which calculates a set pressure value on the basis of an engine output torque estimation value or an engine RPM; and a failure handling unit which selects either the set pressure value and a pressure instruction value in accordance with whether or not failures of a swash plate angle sensor have occurred and outputs the selected value. According to the present invention the set pressure value is calculated on the basis of the engine output torque estimation value and the pump is controlled in accordance with the calculated set pressure value. Thus it is possible to prevent a suction torque value of the pump from exceeding the maximum torque value of the engine even upon the occurrence of failures in the swash plate angle sensor thereby preventing engine stall even upon the occurrence of failures in the swash plate angle sensor in a high load work condition of the engine.

No. of Pages : 25 No. of Claims : 8

(12) PATENT APPLICATION PUBLICATION
(19) INDIA
(22) Date of filing of Application :27/07/2012
(21) Application No.6667/CHENP/2012 A
(43) Publication Date : 19/12/2014

(54) Title of the invention : MULTI LAYER USER INTERFACE WITH FLEXIBLE PARALLEL AND ORTHOGONAL MOVEMENT

(51) International classification :G06F3/048,G06F3/03
(31) Priority Document No :61/304004
(32) Priority Date :12/02/2010
(33) Name of priority country :U.S.A.
(86) International Application No :PCT/US2011/024639
Filing Date :11/02/2011
(87) International Publication No :WO 2011/100623
(61) Patent of Addition to Application Number :NA
Filing Date :NA
(62) Divisional to Application Number :NA
Filing Date :NA

(71)**Name of Applicant :**
1)MICROSOFT CORPORATION
Address of Applicant :One Microsoft Way Redmond Washington 98052 6399 U.S.A.
(72)**Name of Inventor :**
1)FONG Jeffrey Cheng Yao
2)HULL Eric J.
3)CHUB Sergey

(57) Abstract :
A user interface (UI) system calculates movements in a multi layer graphical user interface. The UI system receives user input corresponding to gestures on a touchscreen. The UI system calculates a movement of a first layer in a first direction (e.g. a horizontal direction) at a first movement rate. The UI system calculates a movement of a second layer substantially parallel to the movement of the first layer at a second movement rate that differs from the first movement rate. The UI system calculates a movement (e.g. a vertical movement) in a direction substantially orthogonal to the first direction in a UI element of one of the layers.

No. of Pages : 70 No. of Claims : 15

(12) PATENT APPLICATION PUBLICATION
(19) INDIA
(22) Date of filing of Application :19/12/2013
(21) Application No.10122/CHENP/2013 A
(43) Publication Date : 19/12/2014

(54) Title of the invention : APPARATUS AND METHODS FOR FACILITATING CELL RESELECTION FOR HIGHER PRIORITY LAYERS

(51) International classification :H04b
(31) Priority Document No :61/499668
(32) Priority Date :21/06/2011
(33) Name of priority country :U.S.A.
(86) International Application No :PCT/US2012/043364
Filing Date :20/06/2012
(87) International Publication No :WO 2012/177773
(61) Patent of Addition to Application Number :NA
Filing Date :NA
(62) Divisional to Application Number :NA
Filing Date :NA

(71)**Name of Applicant :**
1)QUALCOMM Incorporated
Address of Applicant :Attn: International Ip Administration 5775 Morehouse Drive San Diego California 92121 U.S.A.
(72)**Name of Inventor :**
1)PICA Francesco
2)LEE Heechoon
3)SAMBHWANI Sharad Deepak
4)KHAN Uzma

(57) Abstract :
User Equipments (UEs) can be adapted to enter into a lower RRC state from a higher RRC state and search for one or more layers of higher priority within a predetermined period of time upon entering into the lower RRC state. According to at least one aspect this search for one or more layers of higher priority may be performed irrespective of RF quality of a current serving cell. According to at least another aspect this search for one or more layers of higher priority may be conducted within the predetermined period of time if a wait period has elapsed since the UE camped on the current serving cell. If the wait period has not elapsed since camping on the current serving cell the search for one or more layers of higher priority may be performed within the predetermined period of time following a duration of the wait period.

No. of Pages : 32 No. of Claims : 36

(12) PATENT APPLICATION PUBLICATION
(19) INDIA
(22) Date of filing of Application :03/12/2012
(21) Application No.10133/CHENP/2012 A
(43) Publication Date : 19/12/2014

(54) Title of the invention : METHOD AND APPARATUS FOR SENDING VERY HIGH THROUGHPUT WLAN ACKNOWLEDGMENT FRAMES

(51) International classification :H04L1/16
(31) Priority Document No :61/355,114
(32) Priority Date :15/06/2010
(33) Name of priority country :U.S.A.
(86) International Application No :PCT/US2011/040575
Filing Date :15/06/2011
(87) International Publication No : NA
(61) Patent of Addition to Application Number :NA
Filing Date :NA
(62) Divisional to Application Number :NA
Filing Date :NA

(71)**Name of Applicant :**
1)QUALCOMM INCORPORATED
Address of Applicant :Attn: International IP Administration 5775 Morehouse Drive San Diego California 92121-1714 United States of America
(72)**Name of Inventor :**
1)WENTINK Maarten Menzo

(57) Abstract :
One of a normal acknowledgement (ACK) and block ACK may be selectively enabled for wireless transmissions using a Very High Throughput Physical Layer Protocol Data Unit (PPDU). At least one designated bit may be set in a Physical Layer header of the PPDU for transmission from a transmitter to a receiver to indicate an ACK type selected from at least at least two of a normal ACK a Block ACK or no ACK. The PPDU may be transmitted in a Very High Throughput frame to the receiver where the designated bit can be used to provoke a normal ACK or Block ACK response to the PPDU depending on the bit value.

No. of Pages : 59 No. of Claims : 38

(12) PATENT APPLICATION PUBLICATION
(21) Application No.1223/CHE/2009 A
(19) INDIA
(22) Date of filing of Application :27/05/2009
(43) Publication Date : 19/12/2014

(54) Title of the invention : SYNCHRONIZED OPTOELECTRONIC PULSE GENERATOR USEFUL FOR GATED PHOTON DETECTION

(51) International classification :g01s
(31) Priority Document No :NA
(32) Priority Date :NA
(33) Name of priority country :NA
(86) International Application No :NA
Filing Date :NA
(87) International Publication No : NA
(61) Patent of Addition to Application Number :NA
Filing Date :NA
(62) Divisional to Application Number :NA
Filing Date :NA

(71)**Name of Applicant :**
1)INDIAN INSTITUTE OF TECHNOLOGY-MADRAS
Address of Applicant :GUINDY CHENNAI 600036 Tamil Nadu India
(72)**Name of Inventor :**
1)ANIL PRABHAKAR

(57) Abstract :
Synchronized Optoelectronic Pulse Generator useful for Gated Photon Detection The present invention relates to Synchronized Optoelectronic Pulse Generator useful for Gated Photon Detection. According to the invention the Synchronized Optoelectronic Pulse Generator uses avalanche photo detectors (APDs), the optical pulses generated from the pulse generator are synchronized at the detector with the arrival of photons generated from optical source or transmitter. The detection of single or few photons employing Synchronized Optoelectronic Pulse Generator the of light have applications in the transfer of sequence of bits of information which can be used to encode or decode messages between two parties, in laser range finding devices, laser Doppler vibrometers and in optical imaging.

No. of Pages : 12 No. of Claims : 4

(12) PATENT APPLICATION PUBLICATION
(19) INDIA
(22) Date of filing of Application :26/02/2013
(21) Application No.1561/CHENP/2013 A
(43) Publication Date : 19/12/2014

(54) Title of the invention : DETECTION OF WATERMARKS IN SIGNALS

(51) International classification :G11B20/00,H04N5/913,H04L29/06
(31) Priority Document No :10171771.8
(32) Priority Date :03/08/2010
(33) Name of priority country:EPO
(86) International Application No :PCT/EP2011/063294
Filing Date :02/08/2011
(87) International Publication No :WO 2012/016986
(61) Patent of Addition to Application Number :NA
Filing Date :NA
(62) Divisional to Application Number :NA
Filing Date :NA

(71)**Name of Applicant :**
1)IRDETO CORPORATE B.V.
Address of Applicant :Taurusavenue 105 NL 2132 LS Hoofddorp Netherlands
(72)**Name of Inventor :**
1)WESTERVELD Egbert

(57) Abstract :
The invention provides for a method and a device for the detection of a watermark in a signal. A first signal is compared with two or more second signals. The second signal with the closest match contains the same watermark as in the first signal. Data indicative for the second signal with the closest match is output as an indication of the watermark in the first signal. The invention further provides for a head end system that provides watermarked content from which the watermarks are detectable by the watermark detection device.

No. of Pages : 29 No. of Claims : 17

(12) PATENT APPLICATION PUBLICATION
(19) INDIA
(22) Date of filing of Application :14/08/2012
(21) Application No.7072/CHENP/2012 A
(43) Publication Date : 19/12/2014

(54) Title of the invention : METHOD AND APPARATUS FOR ASSOCIATING A RELAY IN WIRELESS COMMUNICATIONS

(51) International classification :H04B7/26,H04B7/02,H04W40/22
(31) Priority Document No :61/296,281
(32) Priority Date :19/01/2010
(33) Name of priority country :U.S.A.
(86) International Application No :PCT/US2011/021670
Filing Date :19/01/2011
(87) International Publication No :WO/2011/091001
(61) Patent of Addition to Application Number :NA
Filing Date :NA
(62) Divisional to Application Number :NA
Filing Date :NA

(71)**Name of Applicant :**
1)QUALCOMM INCORPORATED
Address of Applicant :Attn:International IP Administration 5775 Morehouse Drive San Diego California 92121-1714 U.S.A.
(72)**Name of Inventor :**
1)DEXU LIN
2)TINGFANG JI
3)WANSHI CHEN
4)JABER MOHAMMAD BORRAN

(57) Abstract :
Methods and apparatuses are provided that facilitate associating with relays in a wireless network. A device can select whether to utilize relay assistance where present based at least in part on measuring one or more determined or projected parameters related to the relay. Where utilizing a relay results in user-plane data channel conditions above a threshold level and control channel conditions below a threshold level, a serving base station can determine whether to employ another base station to serve the device, jointly serve a relay with an additional base station, and/or the like.

No. of Pages : 72 No. of Claims : 75

(12) PATENT APPLICATION PUBLICATION
(19) INDIA
(22) Date of filing of Application :23/01/2014
(21) Application No.548/CHENP/2014 A
(43) Publication Date : 19/12/2014

(54) Title of the invention : UPLINK POWER CONTROL METHOD BASE STATION AND USER EQUIPMENT

(51) International classification :H04W52/14
(31) Priority Document No :NA
(32) Priority Date :NA
(33) Name of priority country :NA
(86) International Application No :PCT/CN2011/077956
Filing Date :03/08/2011
(87) International Publication No :WO 2012/159364
(61) Patent of Addition to Application Number :NA
Filing Date :NA
(62) Divisional to Application Number :NA
Filing Date :NA

(71)**Name of Applicant :**
1)HUAWEI TECHNOLOGIES CO. LTD.
Address of Applicant :Huawei Administration Building Bantian Longgang District Shenzhen Guangdong 518129 China
(72)**Name of Inventor :**
1)LIANG Yongming
2)NI Wei
3)CHEN Jiming
4)REN Xiaotao

(57) Abstract :
An uplink power control method base station and user equipment. The method in the embodiments of the present invention includes: user equipment sending an uplink test signalling to a transceiver serving the user equipment so that the transceiver calculates the uplink test signalling received power by testing the uplink test signalling; the user equipment receiving the uplink test signalling received power and common reference signal sending power sent by the transceiver; the user equipment receiving and testing the CRS sent by the transceiver to obtain the reference signal received power; the user equipment calculating the uplink path loss of each path between the user equipment and the transceiver according to the uplink test signalling received power common reference signal sending power and reference signal received power; the user equipment calculating the combined path loss according to the uplink path loss of each path between the user equipment and the transceiver; and the user equipment calculating the uplink sending power according to the combined path loss.

No. of Pages : 52 No. of Claims : 32

(12) PATENT APPLICATION PUBLICATION
(19) INDIA
(22) Date of filing of Application :23/01/2014
(21) Application No.579/CHENP/2014 A
(43) Publication Date : 19/12/2014

(54) Title of the invention : ANTIREFLECTION GLAZING UNIT EQUIPPED WITH A POROUS COATING

(51) International classification :C03C17/00,C03C17/36,C23C16/513
(31) Priority Document No :1157400
(32) Priority Date :18/08/2011
(33) Name of priority country :France
(86) International Application No :PCT/FR2012/051850
Filing Date :06/08/2012
(87) International Publication No :WO 2013/024226
(61) Patent of Addition to Application Number :NA
Filing Date :NA
(62) Divisional to Application Number :NA
Filing Date :NA

(71)**Name of Applicant :**
1)SAINT GOBAIN GLASS FRANCE
Address of Applicant :18 avenue dalsace F 92400 Courbevoie France
(72)**Name of Inventor :**
1)GIRON Jean Christophe
2)PETERSEN Christian Bernhard
3)MELCHER Martin
4)NADAUD Nicolas

(57) Abstract :
Glazing unit comprising a transparent especially glass substrate equipped with an antireflection coating which coating comprises at least one film of a porous material essentially comprising silicon oxygen carbon and possibly hydrogen in which the atomic proportion P of carbon relative to the sum of the atomic contributions of silicon oxygen and carbon varies locally in the thickness direction of the film from a first surface to a second surface thereof: increasing between a first minimum value P and a maximum value P the ratio of said maximum value P to said first minimum value P being at least 1.2 the proportion of carbon then decreasing between said maximum value P and a second minimum value P the ratio of said maximum value P to said second minimum value P being at least 1.2.

No. of Pages : 21 No. of Claims : 16

(12) PATENT APPLICATION PUBLICATION
(19) INDIA
(22) Date of filing of Application :14/08/2012
(21) Application No.7120/CHENP/2012 A
(43) Publication Date : 19/12/2014

(54) Title of the invention : CLINICAL DECISION SUPPORT SYSTEM WITH TEMPORAL CONTEXT

(51) International classification :G06F19/00
(31) Priority Document No :61/310307
(32) Priority Date :04/03/2010
(33) Name of priority country :U.S.A.
(86) International Application No :PCT/IB2011/050452
Filing Date :02/02/2011
(87) International Publication No :WO/2011/107893
(61) Patent of Addition to Application Number :NA
Filing Date :NA
(62) Divisional to Application Number :NA
Filing Date :NA

(71)**Name of Applicant :**
1)KONINKLIJKE PHILIPS ELECTRONICS N.V.
Address of Applicant :GROENEWOUDSEWEG 1 EINDHOVEN 5621 BA NETHERLANDS
(72)**Name of Inventor :**
1)COHEN-SOLAL Eric
2)TULIPANO Karina
3)VOLEMANS Victor P. M.
4)OPFER Roland
5)CARLSEN Ingwer C.

(57) Abstract :
A clinical decision support system (CDSS) includes a CDSS module (20) comprising a digital processing device (10) configured to store patient data (34) and a clinical guideline (22). The clinical guideline comprises connected nodes representing clinical workflow events actions or decisions wherein contiguous groups of the nodes are grouped into care phases (40). The CDSS module is configured to associate patient data with patient care phases selected from the care phases of the clinical guideline and determine patient care phase time intervals for the patient care phases based on acquisition date information for the patient data associated with the patient care phases. The selected patient care phase may be a care phase associated with a clinical guideline node associated with the new patient data or may be a patient care phase that is consistent with the acquisition date for the new patient data.

No. of Pages : 29 No. of Claims : 23

(12) PATENT APPLICATION PUBLICATION
(19) INDIA
(22) Date of filing of Application :14/08/2012

(21) Application No.7121/CHENP/2012 A
(43) Publication Date : 19/12/2014

(54) Title of the invention : MULTIFUNCTION FEEDING TUBE

(51) International classification	:A61B5/00,A61B5/0205,A61B5/04
(31) Priority Document No	:61/310308
(32) Priority Date	:04/03/2010
(33) Name of priority country	:U.S.A.
(86) International Application No	:PCT/IB2011/050454
Filing Date	:02/02/2011
(87) International Publication No	:WO/2011/107894
(61) Patent of Addition to Application Number	:NA
Filing Date	:NA
(62) Divisional to Application Number	:NA
Filing Date	:NA

(71)**Name of Applicant :**
1)KONINKLIJKE PHILIPS ELECTRONICS N.V.
Address of Applicant :GROENEWOUDSEWEG 1 EINDHOVEN 5621 BA NETHERLANDS
(72)**Name of Inventor :**
1)FEER David L.
2)SILBER Daniel A.

(57) Abstract :
A medical device comprises: a feeding tube (70) including a feeding lumen (80) with an opening (152) at a distal end of the feeding tube and an electrical lumen (84) having access openings (120) spaced apart along the feeding tube; a set of insulated electrical conductors (82) disposed in the electrical lumen, the set of insulated electrical conductors having electrically exposed portions (132, 132a, 132b) proximate to the access openings; and electrodes (72, 73, 74, 75, 78, 79, 140) comprising electrically conductive material portions (140) disposed in the access openings and electrically contacting the proximate electrically exposed portions of the set of insulated electrical conductors disposed in the electrical lumen. The electrodes include at least one upper or proximal electrode (74, 75, 78, 79) disposed above an expected patient heart electrical centerline (CL) and at least one lower or distal electrode (72, 73) disposed below the expected patient heart electrical centerline

No. of Pages : 42 No. of Claims : 31

(12) PATENT APPLICATION PUBLICATION
(19) INDIA
(22) Date of filing of Application :22/01/2014
(21) Application No.523/CHENP/2014 A
(43) Publication Date : 19/12/2014

(54) Title of the invention : AN AIR TREATMENT DEVICE

(51) International classification :F24F3/12,F24F11/00,A61L9/12
(31) Priority Document No :PCT/CN2011/077272
(32) Priority Date :18/07/2011
(33) Name of priority country :China
(86) International Application No :PCT/IB2012/053591
Filing Date :13/07/2012
(87) International Publication No :WO 2013/011435
(61) Patent of Addition to Application Number :NA
Filing Date :NA
(62) Divisional to Application Number :NA
Filing Date :NA

(71)**Name of Applicant :**
1)KONINKLIJKE PHILIPS N.V.
Address of Applicant :High Tech Campus 5 NL 5656 AE Eindhoven Netherlands
(72)**Name of Inventor :**
1)SHEN Fangzhong

(57) Abstract :
An embodiment of the invention provides an air treatment device. The air treatment device comprises an air purifying unit configured to purify air; a scent dispenser configured to dispense scent; an air detector configured to detect the purified air and provide an output signal; and a processor configured to receive the output signal from the air detector and control the operation speed of the air purifying unit and the dispensing flow of scent dispensed by the scent dispenser based on the output signal wherein the dispensing flow of scent dispensed by the scent dispenser is decreased with the increase of the operating speed of the air purifying unit. Another embodiment of the invention provides a method of controlling a scent dispenser and an air purifying unit of an air treatment device wherein the air treatment device further includes an air detector and a processor. The method comprises the steps of purifying air by using the air purifying unit; detecting the purified air by using the air detector; controlling by using the processor the operating speed of the air purifying unit and the dispensing flow of scent dispensed by the scent dispenser based on the detection result wherein the dispensing flow of scent dispensed by the scent dispenser is decreased with the increase of the operating speed of the air purifying unit.

No. of Pages : 19 No. of Claims : 10

(12) PATENT APPLICATION PUBLICATION
(19) INDIA
(22) Date of filing of Application :23/01/2014
(21) Application No.576/CHENP/2014 A
(43) Publication Date : 19/12/2014

(54) Title of the invention : FINISHED PART TRACK FOR AN INCLINED CONVEYOR SYSTEM FOR MINING TRUCKS

(51) International classification :E21C41/26,E21F13/04,B66B15/04
(31) Priority Document No :10 2011 108 093.0
(32) Priority Date :19/07/2011
(33) Name of priority country :Germany
(86) International Application No :PCT/EP2012/064165
Filing Date :19/07/2012
(87) International Publication No :WO 2013/011083
(61) Patent of Addition to Application Number :NA
Filing Date :NA
(62) Divisional to Application Number :NA
Filing Date :NA

(71)**Name of Applicant :**
1)SIEMAG TECBERG GMBH
Address of Applicant :Kalteiche Ring 28 32 35708 Haiger Germany
(72)**Name of Inventor :**
1)SETZ Holger

(57) Abstract :
The invention relates to a method for producing a finished part track for an inclined conveyor system having a conveying platform and a counterweight in opencast mining comprising the following steps: providing a foundation; placing at least one base element which comprises base members and cross members onto the foundation; fastening the base element to the foundation; placing track elements onto the base element while adjustable spacer elements at least one respective shear cleat and a support are arranged between the base element and track element; and orienting the track elements relative to one another with respect to the respective base elements by means of the spacer elements.

No. of Pages : 17 No. of Claims : 20

(12) PATENT APPLICATION PUBLICATION
(19) INDIA
(22) Date of filing of Application :25/07/2012
(21) Application No.6568/CHENP/2012 A
(43) Publication Date : 19/12/2014

(54) Title of the invention : LED-BASED RECTANGULAR ILLUMINATION DEVICE

(51) International classification :F21K99/00
(31) Priority Document No :61/301,546
(32) Priority Date :04/02/2010
(33) Name of priority country :U.S.A.
(86) International Application No :PCT/US2011/022986
Filing Date :28/01/2011
(87) International Publication No :WO/2011/097135
(61) Patent of Addition to Application Number :NA
Filing Date :NA
(62) Divisional to Application Number :NA
Filing Date :NA

(71)**Name of Applicant :**
1)Xicato Inc.
Address of Applicant :4880 Stevens Creek Blvd. Suite 204 San Jose CA 95129 UNITED STATES OF AMERICA
(72)**Name of Inventor :**
1)Gerard Harbers
2)Kelly C. McGroddy
3)Christopher R. Reed

(57) Abstract :
An illumination device includes a plurality of Light Emitting Diodes (LEDs) in a rectangular light mixing cavity mounted above the LEDs and configured to mix and color convert light emitted from the LEDs. The long sidewall surfaces of the rectangular light mixing cavity are coated with a first type of wavelength converting material while the short sidewall surfaces reflect incident light without color conversionThe output window that is above and separated from the LEDs is coated with a second type of wavelength converting materialThe light mixing cavity may include a replaceable reflective insert that includes a non-metallic diffuse reflective layer backed by a second reflective layer Additionally the LEDs may be mounted on raised pads on a mounting boardThe light mixing cavity may include a bottom reflector with holes wherein the raised pads elevate the LEDs above the top surface of the bottom reflector through the holes.

No. of Pages : 40 No. of Claims : 20

(12) PATENT APPLICATION PUBLICATION
(19) INDIA
(22) Date of filing of Application :20/08/2012
(21) Application No.7217/CHENP/2012 A
(43) Publication Date : 19/12/2014

(54) Title of the invention : MICROFABRICATED PILLAR FINS FOR THERMAL MANAGEMENT

(51) International classification :H01L23/367,H01L23/48
(31) Priority Document No :12/693,760
(32) Priority Date :26/01/2010
(33) Name of priority country :U.S.A.
(86) International Application No :PCT/US2011/022585
Filing Date :26/01/2011
(87) International Publication No :WO/2011/094319
(61) Patent of Addition to Application Number :NA
Filing Date :NA
(62) Divisional to Application Number :NA
Filing Date :NA

(71)**Name of Applicant :**
1)QUALCOMM INCORPORATED
Address of Applicant :ATTN: International IP Administration 5775 Morehouse Drive San Diego California 92121 U.S.A.
(72)**Name of Inventor :**
1)ARVIND CHANDRASEKARAN

(57) Abstract :
An electrical package with improved thermal management. The electrical package includes a die having an exposed back surface. The package further includes a plurality of fins extending outwardly from the back surface for dissipating heat from the package. The die can be arranged in a multi-die stacking configuration. In another embodiment, a method of forming a die for improved thermal management of an electrical package is provided.

No. of Pages : 25 No. of Claims : 33

(12) PATENT APPLICATION PUBLICATION
(19) INDIA
(22) Date of filing of Application :13/12/2012
(21) Application No.10410/CHENP/2012 A
(43) Publication Date : 19/12/2014

(54) Title of the invention : DIFFERENTIAL PRESSURE SENSOR WITH LINE PRESSURE MEASUREMENT

(51) International classification :G01L9/00,G01L13/02,G01L15/00
(31) Priority Document No :12/796,023
(32) Priority Date :08/06/2010
(33) Name of priority country :U.S.A.
(86) International Application No :PCT/US2011/038688
Filing Date :01/06/2011
(87) International Publication No :WO/2011/156185
(61) Patent of Addition to Application Number :NA
Filing Date :NA
(62) Divisional to Application Number :NA
Filing Date :NA

(71)**Name of Applicant :**
1)ROSEMOUNT INC
Address of Applicant :12001 Technology Drive Eden Prairie MN 553344 (US) U.S.A.
(72)**Name of Inventor :**
1)SCHULTE John P.
2)TYSON David G.
3)KLOSINSKI Andrew J.

(57) Abstract :
A pressure sensor assembly for sensing a pressure of a process fluid includes a sensor body (56) having a cavity (132 134) formed therein and first and second openings to the cavity configured to apply first and second pressures (PI P2). A diaphragm (106) in the cavity separates the first opening from the second opening and is configured to deflect in response to a differential pressure between the first pressure and the second pressure. A capacitance based deformation sensor (59) is provided and configured to sense deformation of the sensor body in response to a line pressure applied to the sensor body.

No. of Pages : 15 No. of Claims : 15

(12) PATENT APPLICATION PUBLICATION
(19) INDIA
(22) Date of filing of Application :14/12/2012
(21) Application No.10422/CHENP/2012 A
(43) Publication Date : 19/12/2014

(54) Title of the invention : POSITIONING PROTOCOL CONVEYANCE

(51) International classification :H04W4/02
(31) Priority Document No :61/356,581
(32) Priority Date :19/06/2010
(33) Name of priority country :U.S.A.
(86) International Application No :PCT/US2011/040966
Filing Date :17/06/2011
(87) International Publication No :WO/2011/160075
(61) Patent of Addition to Application Number :NA
Filing Date :NA
(62) Divisional to Application Number :NA
Filing Date :NA

(71)**Name of Applicant :**
1)QUALCOMM INCORPORATED
Address of Applicant :Attn: International IP Administration 5775 Morehouse Drive San Diego California 92121-1714 United States of America
(72)**Name of Inventor :**
1)WACHTER Andreas K.
2)EDGE Stephen William

(57) Abstract :
Techniques for selecting positioning protocols consistent with the capabilities of the location server in a Secure User Plane Location (SUPL) based service are described. The SUPL Location Platform (SLP) transmits the service capabilities of the SLP such as the positioning protocol capabilities of the SLP. The SLP transmits its capabilities of the SLP in an initiation message to the SUPL enabled terminal (SET) or after receiving an initiation message from the SET. The SET may transmit a positioning initiation message and the SLP and SET communicate to determinate one or more position estimates for the SET. The SET may include in the positioning initiation message a positioning protocol positioning message that is consistent with the SLP service capabilities.

No. of Pages : 40 No. of Claims : 48

(12) PATENT APPLICATION PUBLICATION
(19) INDIA
(22) Date of filing of Application :27/12/2012
(21) Application No.10809/CHENP/2012 A
(43) Publication Date : 19/12/2014

(54) Title of the invention : INNOVATIVE DISCOVERY OF THERAPEUTIC DIAGNOSTIC AND ANTIBODY COMPOSITIONS RELATED TO PROTEIN FRAGMENTS OF LYSYL-TRNA SYNTHETASES

(51) International classification	:A61K38/16,A61K38/08,A61K38/17
(31) Priority Document No	:61/350,407
(32) Priority Date	:01/06/2010
(33) Name of priority country	:U.S.A.
(86) International Application No	:PCT/US2011/038813
Filing Date	:01/06/2011
(87) International Publication No	:WO/2011/153277
(61) Patent of Addition to Application Number	:NA
Filing Date	:NA
(62) Divisional to Application Number	:NA
Filing Date	:NA

(71)**Name of Applicant :**
1)ATYR PHARMA INC.
Address of Applicant :3545 John Hopkins Court Suite #250 San Diego CA 92121 United States of America
2)PANGU BIOPHARMA LIMITED
(72)**Name of Inventor :**
1)GREENE Leslie Ann
2)CHIANG Kyle P.
3)HONG Fei
4)VASSEROT Alain P.
5)LO Wing-Sze
6)WATKINS Jeffry D.
7)QUINN Cheryl L.
8)MENDLEIN John D.

(57) Abstract :
Provided are compositions comprising newly identified protein fragments of aminoacyl-tRNA synthetases polynucleotides that encode them and complements thereof related agents and methods of use thereof in diagnostic drug discovery research and therapeutic applications.

No. of Pages : 276 No. of Claims : 139

(12) PATENT APPLICATION PUBLICATION
(19) INDIA
(22) Date of filing of Application :24/01/2014
(21) Application No.622/CHENP/2014 A
(43) Publication Date : 19/12/2014

(54) Title of the invention : TOKEN BASED FILE OPERATIONS

(51) International classification :G06F15/16
(31) Priority Document No :13/207014
(32) Priority Date :10/08/2011
(33) Name of priority country :U.S.A.
(86) International Application No :PCT/US2012/047261
Filing Date :19/07/2012
(87) International Publication No :WO 2013/022582
(61) Patent of Addition to Application Number :NA
Filing Date :NA
(62) Divisional to Application Number :NA
Filing Date :NA

(71)**Name of Applicant :**
1)MICROSOFT CORPORATION
Address of Applicant :One Microsoft Way Redmond Washington 98052 6399 U.S.A.
(72)**Name of Inventor :**
1)CHRISTIANSEN Neal R.
2)GREEN Dustin L.
3)PINKERTON James T.
4)NAGAR Rajeev
5)MATTHEW Bryan Stephen
6)AITHAL Jaivir K.

(57) Abstract :
Described are embodiments which allow token based file operations. The client may request a s0pecial offload file operation that is formatted according to a file access protocol. The file operation may be an offload read operation or an offload write operation. In an offload read operation the client requests that data be logically read from a stored file or a portion thereof. In response the file server provides a response that includes a token that represents the logically read data. In some embodiments the file server may return a response with a token that represents less than all of the requested data if for some reason it cannot provide a token that represents all of the data. The token can then be used by the client in a subsequent offload write operation. In embodiments the tokens represent immutable data that can be safely and securely used across servers and clients.

No. of Pages : 35 No. of Claims : 10

(12) PATENT APPLICATION PUBLICATION
(19) INDIA
(22) Date of filing of Application :22/08/2012
(21) Application No.7266/CHENP/2012 A
(43) Publication Date : 19/12/2014

(54) Title of the invention : ANTIBODIES AGAINST CXCR4

(51) International classification :C07K16/28,A61K39/395,A61P29/00
(31) Priority Document No :61/303,060
(32) Priority Date :10/02/2010
(33) Name of priority country :U.S.A.
(86) International Application No :PCT/GB2011/000175
Filing Date :10/02/2011
(87) International Publication No :WO/2011/098762
(61) Patent of Addition to Application Number :NA
Filing Date :NA
(62) Divisional to Application Number :NA
Filing Date :NA

(71)**Name of Applicant :**
1)AFFITECH RESEARCH AS.
Address of Applicant :Oslo Research Park Gaustadallen 21 N-0349 Oslo Norway.
(72)**Name of Inventor :**
1)KAVLIE Anita
2)KIPRIJANOV Sergej Michailevie

(57) Abstract :
The present invention provides antibodies which bind to CXC chemokine receptor (4) (CXCR4) and which do not induce significant apoptosis of CXCR4 expressing cells. Also provided are inter alia immunoconjugates and compositions comprising such antibodies and methods and uses involving such antibodies particularly in the medical and diagnostic fields.

No. of Pages : 189 No. of Claims : 56

(12) PATENT APPLICATION PUBLICATION
(19) INDIA
(22) Date of filing of Application :30/01/2013
(21) Application No.398/CHE/2013 A
(43) Publication Date : 19/12/2014

(54) Title of the invention : METHOD OF MOUNTING NOZZLE IN COMPACT SPINNING MACHINE

(51) International classification :D01H
(31) Priority Document No :NA
(32) Priority Date :NA
(33) Name of priority country :NA
(86) International Application No :NA
Filing Date :NA
(87) International Publication No : NA
(61) Patent of Addition to Application Number :NA
Filing Date :NA
(62) Divisional to Application Number :NA
Filing Date :NA

(71)**Name of Applicant :**
1)LAKSHMI MACHINE WORKS LTD.
Address of Applicant :PERIANAICKENPALAYAM, COIMBATORE 641 020 Tamil Nadu India
(72)**Name of Inventor :**
1)SRINIVASAN RAJASEKARAN
2)JAYAGOPAL DHARANIPATHI
3)RATHINASABAPATHI VETTRIVIZHI

(57) Abstract :
A mounting arrangement for a compact suction nozzle (1) in drafting arrangement of a textile ring spinning machine comprising a roller stand (9), a bracket (4) fixed to the roller stand (9), a nozzle holder rail (U) fixed to the bracket (4) for mounting a nozzle holder (13) and a nozzle (1) mounted to the nozzle holder (13).

No. of Pages : 21 No. of Claims : 12

(12) PATENT APPLICATION PUBLICATION
(19) INDIA
(22) Date of filing of Application :17/01/2013
(21) Application No.398/CHENP/2013 A
(43) Publication Date : 19/12/2014

(54) Title of the invention : POLYOLEFIN-BASED RESIN COMPOSITION, FILM, WRAPPING BAG AND LID MATERIAL

(51) International classification :C08L23/04,B32B27/32,B65D65/40
(31) Priority Document No :2010142398
(32) Priority Date :23/06/2010
(33) Name of priority country :Japan
(86) International Application No :PCT/JP2011/064603
Filing Date :20/06/2011
(87) International Publication No :WO 2011/162396
(61) Patent of Addition to Application Number :NA
Filing Date :NA
(62) Divisional to Application Number :NA
Filing Date :NA

(71)**Name of Applicant :**
1)SUMITOMO CHEMICAL COMPANY LIMITED
Address of Applicant :27 1 Shinkawa 2 chome Chuo ku Tokyo 1048260 Japan
(72)**Name of Inventor :**
1)SUWA Hiroyuki

(57) Abstract :
The disclosed poly olefin resin compound contains components (A) and (B) as described below. Components (A) and (B) have a total of 100 mass%: component (A) is 20 95 mass% and component (B) is 5 80 mass%. (A): Poly olefin resin compound that satisfies requirements (a1) (a2) and (a3). (a1): The amount of monomer unit based on ethylene is 95 mol% or more (however the total of monomer unit that constitutes poly olefin resin is 100 mol%). (a2): The 5 carbon branching factor (N) measured by C NMR is less than 1000 carbon atoms per 0.1. (a3): Flow activation energy (Ea) is 40 kJ/mol or more. (B): Polypropylene resin.

No. of Pages : 68 No. of Claims : 12

(12) PATENT APPLICATION PUBLICATION
(19) INDIA
(22) Date of filing of Application :27/06/2011
(21) Application No.4559/CHENP/2011 A
(43) Publication Date : 19/12/2014

(54) Title of the invention : METHOD AND SYSTEM FOR BROWSING VISUAL CONTENT DISPLAYED IN A VIRTUAL THREE-DIMENSIONAL SPACE

(51) International classification :G06T17/00
(31) Priority Document No :61/193,444
(32) Priority Date :01/12/2008
(33) Name of priority country :U.S.A.
(86) International Application No :PCT/IL2009/001132
Filing Date :01/12/2009
(87) International Publication No :WO 2010/064236 A1
(61) Patent of Addition to Application Number :NA
Filing Date :NA
(62) Divisional to Application Number :NA
Filing Date :NA

(71)**Name of Applicant :**
1)VISUAL DOMAINS LTD.
Address of Applicant :20 TUVAL STREET, 52522 RAMAT-GAN Israel
(72)**Name of Inventor :**
1)SHEFI, YOAV

(57) Abstract :
The invention provides a method for constructing a zoom path between a predetermined viewing point Pn+1 in a three-dimensional (3D) virtual space and a target point P0 in the 3D space, and for zooming in or zooming out along the zoom path. The target point is assigned control points in the 3D space, and the zoom path of She invention is nonlinear and passes through at least one of the control points. Durign zooming, the viewing direction is continuously selected to provide an aesthetically acceptable zooming effect.

No. of Pages : 24 No. of Claims : 14

(12) PATENT APPLICATION PUBLICATION
(19) INDIA
(22) Date of filing of Application :27/09/2011
(21) Application No.6971/CHENP/2011 A
(43) Publication Date : 19/12/2014

(54) Title of the invention : HEPATITIS C VIRUS INHIBITORS

(51) International classification :C07D403/14
(31) Priority Document No :61/164,579
(32) Priority Date :30/03/2009
(33) Name of priority country :U.S.A.
(86) International Application No :PCT/US2010/028999
Filing Date :29/03/2010
(87) International Publication No :WO 2010/117704 A1
(61) Patent of Addition to Application Number :NA
Filing Date :NA
(62) Divisional to Application Number :NA
Filing Date :NA

(71)**Name of Applicant :**
1)BRISTOL-MYERS SUIBB COMPANY
Address of Applicant :P.O. BOX 4000, ROUTE 206 AND PROVINCE LINE ROAD, PRINCETON, NEW JERSEY 08543-4000 U.S.A.
(72)**Name of Inventor :**
1)LOPEZ, OMAR D.
2)CHEN, QI
3)BELEMA, MAKONEN
4)HAMANN, LAWRENCE G.

(57) Abstract :
This disclosure concerns novel compounds of Formula (I) as defined in the specification and compositions comprising such novel compounds. These compounds are useful antiviral agents, especially in inhibiting the function of the NS5A protein encoded by Hepatitis C virus (HCV). Thus, the disclosure also concerns a method of treating HCV related diseases or conditions by use of these novel compounds or a composition comprising such novel compounds.

No. of Pages : 228 No. of Claims : 17

(12) PATENT APPLICATION PUBLICATION
(19) INDIA
(22) Date of filing of Application :24/08/2012
(21) Application No.7340/CHENP/2012 A
(43) Publication Date : 19/12/2014

(54) Title of the invention : MAINTAINING COLOR CONSISTENCY IN LED LIGHTING DEVICE HAVINGDIFFERENT LED TYPES

(51) International classification :H05B33/08,F21K99/00
(31) Priority Document No :10156099.3
(32) Priority Date :10/03/2010
(33) Name of priority country :EPO
(86) International Application No :PCT/IB2011/050897
Filing Date :03/03/2011
(87) International Publication No :WO/2011/110981
(61) Patent of Addition to Application Number :NA
Filing Date :NA
(62) Divisional to Application Number :NA
Filing Date :NA

(71)**Name of Applicant :**
1)KONINKLIJKE PHILIPS ELECTRONICS N.V.
Address of Applicant :GROENEWOUDSEWEG 1 EINDHOVEN 5621 BA NETHERLANDS
(72)**Name of Inventor :**
1)TER WEEME Berend Jan Willem
2)JANS William Peter Mechtildis Marie

(57) Abstract :
A lighting device has a plurality of LEDs connected in series. In the lighting device a first LED assembly has LEDs of a first type having a first luminous flux output decreasing as a first function of its junction temperature. A second LED assembly has LEDs of a second type having a second luminous flux output decreasing as a second function of its junction temperature different from the first function. At least one of the LEDs of the first type and LEDs of the second type is connected in parallel to a resistor assembly having a temperature-dependent resistance. The temperature dependence of the resistance stabilizes a ratio of the first luminous flux output to the second luminous flux output at different junction temperatures of the first LED assembly and the second LED assembly.

No. of Pages : 27 No. of Claims : 13

(12) PATENT APPLICATION PUBLICATION
(19) INDIA
(22) Date of filing of Application :24/08/2012
(21) Application No.7341/CHENP/2012 A
(43) Publication Date : 19/12/2014

(54) Title of the invention : PROBABILISTIC REFINEMENT OF MODEL-BASED SEGMENTATION

(51) International classification :G06T7/00
(31) Priority Document No :61/312725
(32) Priority Date :11/03/2010
(33) Name of priority country :U.S.A.
(86) International Application No :PCT/IB2011/050601
Filing Date :14/02/2011
(87) International Publication No :WO/2011/110960
(61) Patent of Addition to Application Number :NA
Filing Date :NA
(62) Divisional to Application Number :NA
Filing Date :NA

(71)**Name of Applicant :**
1)KONINKLIJKE PHILIPS ELECTRONICS N.V.
Address of Applicant :GROENEWOUDSEWEG 1 EINDHOVEN 5621 BA NETHERLANDS
2)UNIVERSITY HEALTH NETWORK
(72)**Name of Inventor :**
1)PEKAR Vladimir
2)QAZI Arish Asif

(57) Abstract :
A system for segmenting current diagnostic images includes a workstation (30) which segments a volume of interest in previously generated diagnostic images of a selected volume of interest generated from a plurality of patients. One or more processors (32) are programmed to register the segmented previously generated images and merge the segmented previously generated images into a probability map that depicts a probability that each voxel represents the volume of interest (24) or background (26) and a mean segmentation boundary (40). A segmentation processor (50) registers the probability map with a current diagnostic image (14) to generate a transformed probability map (62). A previously-trained classifier (70) classifies voxels of the diagnostic image with a probability that each voxel depicts the volume of interest or the background.

No. of Pages : 21 No. of Claims : 20

(12) PATENT APPLICATION PUBLICATION
(19) INDIA
(22) Date of filing of Application :06/07/2011
(21) Application No.4824/CHENP/2011 A
(43) Publication Date : 19/12/2014

(54) Title of the invention : FREE-FLOWING EMULSION CONCENTRATES

(51) International classification :A61K8/02
(31) Priority Document No :09000134
(32) Priority Date :08/01/2009
(33) Name of priority country :EPO
(86) International Application No :PCT/EP2009/009252
Filing Date :23/12/2009
(87) International Publication No :WO 2010/078946 A1
(61) Patent of Addition to Application Number :NA
Filing Date :NA
(62) Divisional to Application Number :NA
Filing Date :NA

(71)**Name of Applicant :**
1)COGNIS IP MANAGEMENT GMBH
Address of Applicant :HENKELSTRASSE 67, 40589 DUSSELDORF Germany
(72)**Name of Inventor :**
1)STRAUSS, GABRIELE
2)KAWA, ROLF
3)STORK, ANJA
4)SCHULTE, PETRA

(57) Abstract :
The present invention relates to emulsion concentrates that are free-flowing at low temperature and can be pumped with good sensory properties and good shelf life, in particular suited for cosmetic cloths and preferably comprising no ethoxylated substances.

No. of Pages : 54 No. of Claims : 14

(12) PATENT APPLICATION PUBLICATION
(19) INDIA
(22) Date of filing of Application :13/07/2012
(21) Application No.6167/CHENP/2012 A
(43) Publication Date : 19/12/2014

(54) Title of the invention : METHOD FOR PERFORMING DEREGISTRATION WITH CONTENT RETENTION MODE IN BROADBAND WIRELESS ACCESS SYSTEM

(51) International classification :H04B7/26,H04W52/02
(31) Priority Document No :61/293181
(32) Priority Date :07/01/2010
(33) Name of priority country :U.S.A.
(86) International Application No :PCT/KR2011/000118
Filing Date :07/01/2011
(87) International Publication No :WO 2011/084008
(61) Patent of Addition to Application Number :NA
Filing Date :NA
(62) Divisional to Application Number :NA
Filing Date :NA

(71)**Name of Applicant :**
1)LG ELECTRONICS INC.
Address of Applicant :20 Yeouido dong Yeongdeungpo gu Seoul 150 721 Republic of Korea
(72)**Name of Inventor :**
1)PARK Gi Won
2)KIM Yong Ho
3)RYU Ki Seon

(57) Abstract :
The present invention relates to a broadband wireless access system and more specifically to a deregistration with content retention mode operation procedure initiated by a base station. According to one embodiment of the present invention the present invention provides a method for a mobile station performing a deregistration with content retention (DCR) mode by a request of a base station in a broadband wireless access system and the method comprises the steps of: receiving a first broadcast message for indicating entry into the DCR mode from the base station; transmitting a second message for requesting the entry into the DCR mode to the base station; receiving a third broadcast message that includes acknowledgement (ACK) information for indicating whether the second message is detected; and entering the DCR mode if the ACK information indicates a successful detection of the second message.

No. of Pages : 89 No. of Claims : 15

(12) PATENT APPLICATION PUBLICATION
(19) INDIA
(22) Date of filing of Application :24/08/2012
(21) Application No.7345/CHENP/2012 A
(43) Publication Date : 19/12/2014

(54) Title of the invention : MOTION VISUALISATION IN ANGIOGRAPHIC IMAGES

(51) International classification :G06T7/20
(31) Priority Document No :10156297.3
(32) Priority Date :12/03/2010
(33) Name of priority country :EPO
(86) International Application No :PCT/IB2011/050926
Filing Date :04/03/2011
(87) International Publication No :WO/2011/110987
(61) Patent of Addition to Application Number :NA
Filing Date :NA
(62) Divisional to Application Number :NA
Filing Date :NA

(71)**Name of Applicant :**
1)KONINKLIJKE PHILIPS ELECTRONICS N.V.
Address of Applicant :GROENEWOUDSEWEG 1 EINDHOVEN 5621 BA NETHERLANDS
(72)**Name of Inventor :**
1)WAECHTERSTEHLE Irina
2)GROTH Alexandra
3)HERMANS Ronaldus Petrus Johannes
4)BERTRAM Matthias

(57) Abstract :
A method and an apparatus for motion visualization of a moving object in angiographic images are described. In a preferred embodiment of the method first a mask image of the object of interest is acquired and a sequence of angiographic images of the object in different phases of motion of the object is acquired. Then a first angiographic subtraction image and at least a second angiographic subtraction image are generated by subtracting the angiographic images from the mask image. Subsequently a twice subtracted image is generated by subtracting the first angiographic subtraction image from the second angiographic subtraction image. In this way a double subtraction i.e. a twice subtracted angiography is performed to facilitate the assessment of the motion.

No. of Pages : 22 No. of Claims : 15

(12) PATENT APPLICATION PUBLICATION
(19) INDIA
(22) Date of filing of Application :24/08/2012
(21) Application No.7346/CHENP/2012 A
(43) Publication Date : 19/12/2014

(54) Title of the invention : A METHOD AND SYSTEM FOR CONTROLLING AT LEAST ONE DEVICE

(51) International classification :G06F3/01
(31) Priority Document No :10156453.2
(32) Priority Date :15/03/2010
(33) Name of priority country :EPO
(86) International Application No :PCT/IB2011/050962
Filing Date :08/03/2011
(87) International Publication No :WO/2011/114257
(61) Patent of Addition to Application Number :NA
Filing Date :NA
(62) Divisional to Application Number :NA
Filing Date :NA

(71)**Name of Applicant :**
1)KONINKLIJKE PHILIPS ELECTRONICS N.V.
Address of Applicant :GROENEWOUDSEWEG 1 EINDHOVEN 5621 BA NETHERLANDS
(72)**Name of Inventor :**
1)ALIAKSEYEU Dzmitry Viktorovich
2)DU Jia
3)ZWARTKRUIS-PELGRIM Petronella Hendrika

(57) Abstract :
A method and system for controlling (210) at least one device. The device is controlled by sensing (208) at least one movement or presence of the user within at least one zone. The location of the zone being defined (202 206) on the basis of the detected position of the user and updated (206) upon changes in position of the user being detected.

No. of Pages : 14 No. of Claims : 14

(12) PATENT APPLICATION PUBLICATION
(19) INDIA
(22) Date of filing of Application :30/08/2012
(21) Application No.7495/CHENP/2012 A
(43) Publication Date : 19/12/2014

(54) Title of the invention : METHOD AND APPARATUS FOR ESTABLISHING AND MAINTAINING PEER-TO-PEER (P2P) COMMUNICATION OF UNLICENSED SPECTRUM

(51) International classification :H04W76/02
(31) Priority Document No :61/314,972
(32) Priority Date :17/03/2010
(33) Name of priority country :U.S.A.
(86) International Application No :PCT/US2011/028555
Filing Date :15/03/2011
(87) International Publication No :WO/2011/116017
(61) Patent of Addition to Application Number :NA
Filing Date :NA
(62) Divisional to Application Number :NA
Filing Date :NA

(71)**Name of Applicant :**
1)QUALCOMM INCORPORATED
Address of Applicant :International IP Administration 5775 Morehouse Drive San Diego California 92121-1714 U.S.A.
(72)**Name of Inventor :**
1)ALAN BARBIERI
2)NAGA BHUSHAN
3)RAVI PALANKI
4)PETER GAAL

(57) Abstract :
Techniques for establishing and maintaining peer-to-peer (P2P) communication are described. In an aspect, P2P communication on an unlicensed spectrum may be established and maintained with network assistance. In one design, a user equipment (UE) may communicate with a wide area network (WAN) to establish P2P communication with at least one other UE on a first frequency band that is not licensed to the WAN. For example, the UE may receive an assignment of at least one frequency channel in the first frequency band for P2P communication. The UE may then communicate peer-to-peer with the other UE(s) on the at least one frequency channel. The UE may also communicate with the WAN to maintain P2P communication with the other UE(s), e.g., to switch to another frequency channel if necessary.

No. of Pages : 46 No. of Claims : 12

(12) PATENT APPLICATION PUBLICATION
(19) INDIA
(22) Date of filing of Application :30/07/2013
(21) Application No.6095/CHENP/2013 A
(43) Publication Date : 19/12/2014

(54) Title of the invention : PRODUCTION DEVICE AND PRODUCTION METHOD FOR CONNECTED PACKAGE PRODUCTS

(51) International classification :B65B57/04,B65B9/10,B65B57/00
(31) Priority Document No :2011018152
(32) Priority Date :31/01/2011
(33) Name of priority country :Japan
(86) International Application No :PCT/JP2011/076279
Filing Date :15/11/2011
(87) International Publication No :WO 2012/105104
(61) Patent of Addition to Application Number :NA
Filing Date :NA
(62) Divisional to Application Number :NA
Filing Date :NA

(71)**Name of Applicant :**
1)UNICHARM CORPORATION
Address of Applicant :182 Shimobun Kinsei cho Shikokuchuo shi Ehime 7990111 Japan
(72)**Name of Inventor :**
1)SHINOMORI Youji
2)MURAKAMI Seiji

(57) Abstract :
In order to increase the production efficiency of the connected package products in a production device (10) for connected package products in which a first set number of package products are connected in line: a package product connected body in which a plurality of package products are connected in line is formed and transferred; whether each of the package products in the package product connection body is a good package product or a defective package product is assessed; the package product connected body is cut when the first set number of good package products are continuously transferred and also the package product connected body is cut between the good package product and the defective package product so as to form a good product constituted by the first set number of good package products a partial product constituted by the good package products fewer than the first set number and a defective product constituted by at least one defective package product; and the good product the partial product and the defective product are transferred through mutually different transfer paths.

No. of Pages : 24 No. of Claims : 8

(12) PATENT APPLICATION PUBLICATION
(19) INDIA
(21) Application No.7110/CHENP/2012 A
(22) Date of filing of Application :14/08/2012
(43) Publication Date : 19/12/2014

(54) Title of the invention : A NORMATIVE DATASET FOR NEUROPSYCHIATRIC DISORDERS

(51) International classification :G06T7/00
(31) Priority Document No :61/309543
(32) Priority Date :02/03/2010
(33) Name of priority country :U.S.A.
(86) International Application No :PCT/IB2011/050450
Filing Date :02/02/2011
(87) International Publication No :WO/2011/107892
(61) Patent of Addition to Application Number :NA
Filing Date :NA
(62) Divisional to Application Number :NA
Filing Date :NA

(71)**Name of Applicant :**
1)KONINKLIJKE PHILIPS ELECTRONICS N.V.
Address of Applicant :GROENEWOUDSEWEG 1 EINDHOVEN 5621 BA NETHERLANDS
2)DARTMOUTH COLLEGE
(72)**Name of Inventor :**
1)ZAGORCHEV Lyubomir Georgiev
2)KNESER Reinhard
3)GELLER Dieter
4)QIAN Yuechen
5)WEESE Juergen
6)GARLINGHOUSE Matthew A.
7)ROTH Robert M.
8)MCALLISTER Thomas W.

(57) Abstract :
A system and method for identifying an abnormality of an anatomical structure. The system and method segments using a processor the anatomical structure imaged in a volumetric image of a plurality of control patients to produce a control segmentation of the anatomical structures of each of the control patients obtains a normative dataset by extracting a statistical representation of a morphology of the control segmentations segments the anatomical structure of a patient being analyzed for abnormalities to produce a patient segmentation and compares the patient segmentation to the normative dataset obtained from the control segmentations.

No. of Pages : 21 No. of Claims : 19

(12) PATENT APPLICATION PUBLICATION
(19) INDIA
(22) Date of filing of Application :14/08/2012
(21) Application No.7113/CHENP/2012 A
(43) Publication Date : 19/12/2014

(54) Title of the invention : PATIENT INTERFACE DEVICE HAVING CAM WHEEL ADJUSTMENT MECHANISM

(51) International classification :A61M16/06
(31) Priority Document No :61/309914
(32) Priority Date :03/03/2010
(33) Name of priority country :U.S.A.
(86) International Application No :PCT/IB2011/050608
Filing Date :14/02/2011
(87) International Publication No :WO/2011/107899
(61) Patent of Addition to Application Number :NA
Filing Date :NA
(62) Divisional to Application Number :NA
Filing Date :NA

(71)**Name of Applicant :**
1)KONINKLIJKE PHILIPS ELECTRONICS N.V.
Address of Applicant :GROENEWOUDSEWEG 1 EINDHOVEN 5621 BA NETHERLANDS
(72)**Name of Inventor :**
1)MATULA Jr. Jerome
2)ANDRESS Derrick Blake

(57) Abstract :
A patient interface device (2 70 106) is provided that includes a support structure (12 74 110) a pivot arm (8 98) pivotably coupled to the support structure and structured to pivot about an axis a patient coupling member (4 72 108) such as a mask or a forehead support coupled to the pivot arm and a cam wheel (42 42) rotateably coupled to the support structure and engaging the pivot arm wherein rotation of the cam wheel relative to the support structure and the pivot arm causes the pivot arm to pivot about the axis and the patient coupling member to move either forward or backward along a path of movement.

No. of Pages : 24 No. of Claims : 14

(12) PATENT APPLICATION PUBLICATION
(19) INDIA
(22) Date of filing of Application :30/08/2012
(21) Application No.7522/CHENP/2012 A
(43) Publication Date : 19/12/2014

(54) Title of the invention : METHOD FOR USING A COMMUNICATION SYSTEM CONNECTED TO A PLURALITY OF MOBILE DEVICES AND PRIORITIZING THE MOBILE DEVICES COMMUNICATION SYSTEM AND USE THEREOF

(51) International classification :H04M1/60,B60R11/02
(31) Priority Document No :12/718,064
(32) Priority Date :05/03/2010
(33) Name of priority country :U.S.A.
(86) International Application No :PCT/US2011/026609
Filing Date :01/03/2011
(87) International Publication No :WO/2011/109344
(61) Patent of Addition to Application Number :NA
Filing Date :NA
(62) Divisional to Application Number :NA
Filing Date :NA

(71)**Name of Applicant :**
1)JOHNSON CONTROLS TECHNOLOGY COMPANY
Address of Applicant :915 E 32nd Street Holland MI 49424 United States of America
(72)**Name of Inventor :**
1)ELISABET A ANDERSON
2)MARK ZEINSTRA
3)MICHAEL J SIMS

(57) Abstract :
A method and a communication system is disclosed for using a communication system connected to at least a first mobile device (121 } and a second mobile device (122), wherein the communication system is operable in at least a first operating state and a second operating state, wherein the connection of the communication system to the first mobile device (121) is prioritized in ïh& first operating state and wherein the connection of the communication system to the second mobile device (122) is prioritized in the second operating state.

No. of Pages : 15 No. of Claims : 13

(12) PATENT APPLICATION PUBLICATION
(19) INDIA
(22) Date of filing of Application :21/12/2012
(21) Application No.10635/CHENP/2012 A
(43) Publication Date : 19/12/2014

(54) Title of the invention : METHOD FOR CONTROLLING A LIGHTING SYSTEM AND LIGHTING SYSTEM

(51) International classification :H05B37/02
(31) Priority Document No :10164692.5
(32) Priority Date :02/06/2010
(33) Name of priority country :EPO
(86) International Application No :PCT/IB2011/052316
Filing Date :27/05/2011
(87) International Publication No :WO/2011/151765
(61) Patent of Addition to Application Number :NA
Filing Date :NA
(62) Divisional to Application Number :NA
Filing Date :NA

(71)**Name of Applicant :**
1)KONINKLIJKE PHILIPS ELECTRONICS N.V.
Address of Applicant :GROENEWOUDSEWEG 1 EINDHOVEN 5621 BA NETHERLANDS
(72)**Name of Inventor :**
1)FERI Lorenzo
2)TALSTRA Johan C.

(57) Abstract :
The invention relates to a method for controlling a lighting system said lighting system comprising a plurality of luminaires (10 12 14 16 18) a plurality of sensors (24 26) a central control unit (22) and a network (20) comprising networking devices for establishing a communication between the luminaires the sensors and the central control unit. These luminaires sensors and networking devices represent local units of the lighting system. In a standard operation mode the luminaires (10 12 14 16 18) are controlled by the central control unit (22) on the basis of sensor data transmitted to the central control unit (22). In case of failure of operation of the central control unit (22) the lighting systems switches into a fallback mode wherein each luminare (10 12 14 16 18) is controlled by a local unit associated to or represented by this luminaire (10 12 14 16 18).

No. of Pages : 17 No. of Claims : 11

(12) PATENT APPLICATION PUBLICATION
(19) INDIA
(22) Date of filing of Application :21/12/2012
(21) Application No.10639/CHENP/2012 A
(43) Publication Date : 19/12/2014

(54) Title of the invention : SYSTEM AND METHOD OF DELIVERING VESTIBULAR STIMULATION CUSTOMIZABLE TO INDIVIDUAL SUBJECTS

(51) International classification :A61N1/36
(31) Priority Document No :61/357158
(32) Priority Date :22/06/2010
(33) Name of priority country :U.S.A.
(86) International Application No :PCT/IB2011/052189
Filing Date :18/05/2011
(87) International Publication No :WO/2011/161562
(61) Patent of Addition to Application Number :NA
Filing Date :NA
(62) Divisional to Application Number :NA
Filing Date :NA

(71)**Name of Applicant :**
1)KONINKLIJKE PHILIPS ELECTRONICS N.V.
Address of Applicant :GROENEWOUDSEWEG 1 EINDHOVEN 5621 BA NETHERLANDS
(72)**Name of Inventor :**
1)KOLEN Alexander Franciscus
2)PUSZKA Agathe

(57) Abstract :
The vestibular system of a subject is stimulated in accordance with a therapy regime that dictates one or more parameters of the stimulation. The system is configured such that at a single site one or more parameters of the stimulation varies for different locations at the site. This may enhance the customizability and/or effectiveness of the stimulation.

No. of Pages : 30 No. of Claims : 16

(12) PATENT APPLICATION PUBLICATION
(19) INDIA
(22) Date of filing of Application :17/01/2014
(21) Application No.196/CHE/2014 A
(43) Publication Date : 19/12/2014

(54) Title of the invention : ELECTRONIC DEVICE FOR RECOGNIZING ERRONEOUS INSERTION OF CARD, AND OPERATING METHOD THEREOF

(51) International classification	:G06K19/07
(31) Priority Document No	:10-2013-0006605
(32) Priority Date	:21/01/2013
(33) Name of priority country	:Republic of Korea
(86) International Application No	:NA
Filing Date	:NA
(87) International Publication No	: NA
(61) Patent of Addition to Application Number	:NA
Filing Date	:NA
(62) Divisional to Application Number	:NA
Filing Date	:NA

(71)**Name of Applicant :**
1)SAMSUNG ELECTRONICS CO., LTD.
Address of Applicant :129, Samsung-ro, Yeongtong-gu, Suwon-si, Gyeonggi-do, Republic of Korea.
(72)**Name of Inventor :**
1)Yong-Sang YUN

(57) Abstract :
An electronic device comprises a socket having a plurality of connection terminals that accommodates a card-type external device having a corner cut-out portion, a plurality of contact pads exposed on a surface of the card-type external device that are correspondingly connected to the connection terminals in response to insertion of the card-type external device into the socket. A detection unit detects erroneous insertion of the card-type external device into the socket in response to incorrect location of the cut-out portion during the erroneous insertion. A processor outputs a control signal in response to the detected erroneous insertion of the card-type external device.

No. of Pages : 37 No. of Claims : 15

(12) PATENT APPLICATION PUBLICATION
(19) INDIA
(22) Date of filing of Application :21/08/2012
(21) Application No.7223/CHENP/2012 A
(43) Publication Date : 19/12/2014

(54) Title of the invention : BLOCK AGGREGATION OF OBJECTS IN A COMMUNICATION SYSTEM

(51) International classification :H04L1/00,H03M13/27
(31) Priority Document No :12/717,054
(32) Priority Date :03/03/2010
(33) Name of priority country :U.S.A.
(86) International Application No :PCT/US2011/027078
Filing Date :03/03/2011
(87) International Publication No :WO/2011/109653
(61) Patent of Addition to Application Number :NA
Filing Date :NA
(62) Divisional to Application Number :NA
Filing Date :NA

(71)**Name of Applicant :**
1)QUALCOMM INCORPORATED
Address of Applicant :International IP Administration 5775 Morehouse Drive San Diego California 92121-1714 U.S.A.
(72)**Name of Inventor :**
1)MICHAEL G. LUBY
2)MARK WATSON

(57) Abstract :
A method of mapping m individual objects to source symbols for delivering data from a transmitter to a receiver in a communication system, the m individual objects ordered from object 1 to object m, wherein m > 1, includes: aggregating the m individual objects into an aggregate object, including for each individual object j, calculating a number of source symbols S(j) for containing data of the individual object j; and partitioning the aggregate object into Z source blocks, including for each source block k and each individual object j, calculating a number of source symbols NSS(j, k) of individual object j in source block k, wherein the S(j) source symbols for each individual object j are arranged consecutively within consecutive source blocks, starting from a first source block for which NSS(j, k) > 0 to a last source block for which NSS(j, k) > 0.

No. of Pages : 39 No. of Claims : 36

(12) PATENT APPLICATION PUBLICATION
(19) INDIA
(22) Date of filing of Application :14/03/2011
(21) Application No.766/CHE/2011 A
(43) Publication Date : 19/12/2014

(54) Title of the invention : HERMITICALLY SEALED SOLAR WATER HEATER FUNCTIONING ON SIPHON ACTION FOR PROVIDING DEMINERALISED PREHEATED WATER TO THERMAL POWER PLANT

(51) International classification :f01k
(31) Priority Document No :NA
(32) Priority Date :NA
(33) Name of priority country :NA
(86) International Application No :NA
Filing Date :NA
(87) International Publication No : NA
(61) Patent of Addition to Application Number :NA
Filing Date :NA
(62) Divisional to Application Number :NA
Filing Date :NA

(71)**Name of Applicant :**
1)VALAGAM RAJAGOPAL RAGHUNATHAN
Address of Applicant :OLD NO.6, NEW NO.72, 12TH AVENUE, ASHOK NAGAR, CHENNAI - 600 083 Tamil Nadu India
(72)**Name of Inventor :**
1)VALAGAM RAJAGOPAL RAGHUNATHAN

(57) Abstract :
According to present aspect of invention, there is a provided a system for hermitically sealing the water storage tank to prevent the feed water from getting contaminated which is used for generating electricity from the thermal power plant. The system comprises of solar water heater which preheats the feed water by means of solar energy and thereby takes up the water close to the boiling point. So, the major heat input to preheat the feed water is utilized from solar energy and thereby the dependency on the fossil fuel to heat the feed water from its ambient temperature is greatly reduced. The preheated water is further heated by feed water heater by trapping the waste heat from the exhaust gases and the heated feed water is pumped to the boiler and where it is converted to steam by means of heat generated by the combustion of fossil fuel. The steam impinging on the turbine blades drives it which in turn generates power from the generator. The steam is then condensed in the condenser by losing heat to the condensate liquid and the water coming out of condenser is pumped to the overhead water tank and the process of power generation is continued uninterruptedly. Since the feed water gains major heat by means of renewable energy(solar energy), the consumption of fossil fuel is significantly reduced which also reduces the emission of toxic substances to the environment and also the thermal efficiency of thermal power plant is increased.

No. of Pages : 24 No. of Claims : 16

(12) PATENT APPLICATION PUBLICATION
(19) INDIA
(22) Date of filing of Application :24/08/2012
(21) Application No.7372/CHENP/2012 A
(43) Publication Date : 19/12/2014

(54) Title of the invention : BALL SCREW AND MANUFACTURING METHOD OF NUT FOR BALL SCREW

(51) International classification :F16H25/24,B21K1/70
(31) Priority Document No :2010-061182
(32) Priority Date :17/03/2010
(33) Name of priority country :Japan
(86) International Application No :PCT/JP2011/001560
Filing Date :16/03/2011
(87) International Publication No :WO/2011/114728
(61) Patent of Addition to Application Number :NA
Filing Date :NA
(62) Divisional to Application Number :NA
Filing Date :NA

(71)**Name of Applicant :**
1)NSK LTD.
Address of Applicant :6-3 Ohsaki 1-chome Shinagawa-ku Tokyo 141-8560 Japan
(72)**Name of Inventor :**
1)HARADA Toru
2)HASHIMOTO Koji
3)ITO Tsuyoshi
4)YAMASHITA Tomofumi
5)AOKI Naoya

(57) Abstract :
Provided is a ball screw in which an outer 5 circumferential formation such as a flange is formed at a portion facing a ball circulating passage out of outer circumferential surface of a nut. The ball screw (1) includes: a screw shaft (3) having on its outer circumferential surface a screw groove (3a); a nut (5) having on its inner circumferential surface a screw groove (5a) facing the screw groove (3a); a plurality of balls (9) rollably loaded in a spiral ball rolling passage (7) formed by the both screw grooves (3a,5a); and a ball circulating passage (11) to return the balls (9) from a start point to an end point of the ball rolling passage (7) for recirculation of the balls. The ball circulating passage (11) is a concaved groove formed by concaving a groove on a part of the cylindrical inner circumferential surface of the nut (5) by plastic working. Then, a flange (13) is integrally provided at a portion facing the ball circulating passage (11) and the screw groove (5a).

No. of Pages : 188 No. of Claims : 21

(12) PATENT APPLICATION PUBLICATION
(19) INDIA
(22) Date of filing of Application :17/10/2011
(21) Application No.7511/CHENP/2011 A
(43) Publication Date : 19/12/2014

(54) Title of the invention : DIKETOPYRROLOPYRROLE POLYMERS FOR USE IN ORGANIC SEMICONDUCTOR DEVICES

(51) International classification :H01B1/12
(31) Priority Document No :09155919.5
(32) Priority Date :23/03/2009
(33) Name of priority country :EPO
(86) International Application No :PCT/EP2010/053655
Filing Date :22/03/2010
(87) International Publication No :WO 2010/108873 A1
(61) Patent of Addition to Application Number :NA
Filing Date :NA
(62) Divisional to Application Number :NA
Filing Date :NA

(71)**Name of Applicant :**
1)BASF SE
Address of Applicant :67056, LUDWIGSHAFEN Germany
(72)**Name of Inventor :**
1)HAYOZ, PASCAL
2)AEBISCHER, OLIVIER, FREDERIC
3)DUGGELI, MATHIAS
4)KIRNER, HANS, JURG
5)FONRODONA TURON, MARTA

(57) Abstract :
The present invention relates to polymers comprising one or more (repeating) unit(s) of the formula (1) which are characterized in that Ar1 and Ar1' are independently of each other are an annulated (aromatic) heterocyclic ring system, containing at least one thiophene ring, which may be optionally substituted by one, or more groups, and their use as organic semiconductor in organic devices, especially in organic photovoltaics (solar cells) and photodiodes, or in a device containing a diode and/or an or¬ganic field effect transistor. The polymers according to the invention have excellent solubility in organic solvents and excellent film-forming properties. In addition, high efficiency of energy conversion, excellent field-effect mobility, good on/off current ra¬tios and/or excellent stability can be observed, when the polymers according to the invention are used in organic field effect tran¬sistors, organic photovoltaics (solar cells) and photodiodes.

No. of Pages : 81 No. of Claims : 15

(12) PATENT APPLICATION PUBLICATION
(19) INDIA
(22) Date of filing of Application :14/03/2011
(21) Application No.767/CHE/2011 A
(43) Publication Date : 19/12/2014

(54) Title of the invention : WIND TURBINE WITH STACKABLE AIRFOIL BLADES

(51) International classification :f03d
(31) Priority Document No :NA
(32) Priority Date :NA
(33) Name of priority country :NA
(86) International Application No :NA
Filing Date :NA
(87) International Publication No : NA
(61) Patent of Addition to Application Number :NA
Filing Date :NA
(62) Divisional to Application Number :NA
Filing Date :NA

(71)**Name of Applicant :**
1)VALAGAM RAJAGOPAL RAGHUNATHAN
Address of Applicant :OLD NO.6, NEW NO.72, 12TH AVENUE, ASHOK NAGAR, CHENNAI - 600 083 Tamil Nadu India
(72)**Name of Inventor :**
1)VALAGAM RAJAGOPAL RAGHUNATHAN

(57) Abstract :
According to present aspect of invention, there is provided a system for mounting the nacelle over the turbine at inverted position and the generation of power by stacking the airfoil blades besides preventing the wobbling of the turbine and the generation of the stresses. The wind turbine along with the rotor is mounted on the tower with bearings for accommodating the misalignment. The nacelle at inverted position is mounted over the turbine rather than mounting it beneath the turbine. The nacelle is supported by nacelle support plate which is attached to the guy wires anchored to the ground. The support plate holds the nacelle and it transmits the vibration of the nacelle to the ground by means of guy wires which when not transmitted causes the turbine to wobble and develop undesirable stress. Since the nacelle mounted at inverted position above the turbine, it acts as simply supported beam and it exerts only axial load on the tower rather than lateral load thereby it aids in the structural rigidity of the structure. The rotor has provisions for stacking the airfoil blades for more generation of power according to the need. Since the guy wires are anchored to the tip of the turbine at the nacelle support plate, the wobbling action of the turbine is considerably reduced thereby it enhances rigidity to the structure.

No. of Pages : 20 No. of Claims : 17

(12) PATENT APPLICATION PUBLICATION
(19) INDIA
(22) Date of filing of Application :22/08/2012
(21) Application No.7267/CHENP/2012 A
(43) Publication Date : 19/12/2014

(54) Title of the invention : CALL ATTEMPT NOTIFICATION

(51) International classification :H04M3/42
(31) Priority Document No :NA
(32) Priority Date :NA
(33) Name of priority country :NA
(86) International Application No :PCT/IB2010/000623
Filing Date :22/02/2010
(87) International Publication No :WO/2011/101700
(61) Patent of Addition to Application Number :NA
Filing Date :NA
(62) Divisional to Application Number :NA
Filing Date :NA

(71)**Name of Applicant :**
1)ALCATEL LUCENT
Address of Applicant :3 avenue Octave Greard F-75007 Paris France
(72)**Name of Inventor :**
1)THOMAS SONY
2)JANARDHAN HARISH

(57) Abstract :
The embodiments herein relate to call lists that detail all call attempts made to a called party that have not been succesful in communication networks. The reasons for the failure can range from no answer to out of range or congestion in the network. A system and method is disclosed for notifying a called user of a failed call attempt made by a calling user. A switch receives a call request from a calling user and on determining that a communication session cannot be established between the calling user and the called user, the switch terminates the link to the calling user and sends the call attempt notification to the called user. The called user would be notified of the call attempt made by the calling user, the contact details of the calling user and reason for the failure of the call attempt.

No. of Pages : 30 No. of Claims : 14

(12) PATENT APPLICATION PUBLICATION
(19) INDIA
(22) Date of filing of Application :22/08/2012
(21) Application No.7268/CHENP/2012 A
(43) Publication Date : 19/12/2014

(54) Title of the invention : ENHANCEMENTS FOR INCREASED SPATIAL REUSE IN AD-HOC NETWORKS

(51) International classification :H04W74/00
(31) Priority Document No :12/710,881
(32) Priority Date :23/02/2010
(33) Name of priority country :U.S.A.
(86) International Application No :PCT/US2011/025939
Filing Date :23/02/2011
(87) International Publication No :WO/2011/106436
(61) Patent of Addition to Application Number :NA
Filing Date :NA
(62) Divisional to Application Number :NA
Filing Date :NA

(71)**Name of Applicant :**
1)QUALCOMM INCORPORATED
Address of Applicant :Attn:International IP Administration 5775 Morehouse Drive San Diego California 92121-1714 U.S.A.
(72)**Name of Inventor :**
1)SOUMYA DAS
2)KRISHNAN RAJAMANI
3)XIAOLONG HUANG
4)DILIP KRISHNASWAMY
5)SAMIR S SOLIMAN

(57) Abstract :
A method of facilitating communication in a wireless ad-hoc network comprises: generating, at a node in the wireless ad-hoc network, target availability information with regard to one or more transmission slots, the target availability information indicating whether the node is permitted to receive a transmission during each transmission slot; generating, at the node, owner availability information with regard to one or more transmission slots, the owner availability information indicating whether the node is permitted to transmit during each transmission slot; and broadcasting, from the node, the target availability information and the owner availability information to separately indicate availability as either an owner or a target for one or more transmission slots.

No. of Pages : 48 No. of Claims : 42

(12) PATENT APPLICATION PUBLICATION
(19) INDIA
(22) Date of filing of Application :22/08/2012
(21) Application No.7269/CHENP/2012 A
(43) Publication Date : 19/12/2014

(54) Title of the invention : SYSTEM AND METHOD FOR MOBILE-TO-COMPUTER COMMUNICATION

(51) International classification :H04M7/00
(31) Priority Document No :61/312,230
(32) Priority Date :09/03/2010
(33) Name of priority country :U.S.A.
(86) International Application No :PCT/US2011/027734
Filing Date :09/03/2011
(87) International Publication No :WO/2011/112708
(61) Patent of Addition to Application Number :NA
Filing Date :NA
(62) Divisional to Application Number :NA
Filing Date :NA

(71)**Name of Applicant :**
1)QUALCOMM ISKOOT INC.
Address of Applicant :Attn: International IP Administration 5775 Morehouse Drive San Diego California 92121-1714 United States of America
(72)**Name of Inventor :**
1)HARRIS Sarah
2)JACOBSTEIN Mark Williams
3)GUEDALIA Jacob
4)GUEDALIA Isaac David

(57) Abstract :
Apparatus and methods for establishing a voice call between a wireless device and a personal computer (PC) are disclosed. A call initiation message can be received at a server including information for the PC from the wireless device. A conference can be setup including establishing a conference ID to conference the wireless device and the PC. A message can be generated for the PC containing voice contact information for the wireless device related to the conference ID. The message can be transmitted to the PC. A dial-in phone number can be transmitted to the wireless device to dial into the conference.

No. of Pages : 44 No. of Claims : 44

(12) PATENT APPLICATION PUBLICATION
(19) INDIA
(22) Date of filing of Application :27/09/2013
(21) Application No.7880/CHENP/2013 A
(43) Publication Date : 19/12/2014

(54) Title of the invention : EXPRESSION VECTOR FOR ANIMAL CELLS

(51) International classification :C12N15/85,C12N15/12,C12N1/21
(31) Priority Document No :1020110028764
(32) Priority Date :30/03/2011
(33) Name of priority country :Republic of Korea
(86) International Application No :PCT/KR2012/002368
Filing Date :30/03/2012
(87) International Publication No :WO 2012/134215
(61) Patent of Addition to Application Number :NA
Filing Date :NA
(62) Divisional to Application Number :NA
Filing Date :NA

(71)**Name of Applicant :**
1)PANGEN BIOTECH INC.
Address of Applicant :5th Floor NK Bio Bldg. Soonhwanro 204 Sangdaewon dong Jungwon gu Seongnam si Gyeonggi do 462 120 Republic of Korea
(72)**Name of Inventor :**
1)YOON Jaeseung
2)BAEK Kwanghee
3)BYUN Taeho
4)PARK Jeong Soo

(57) Abstract :
There is provided an expression vector for animal cell having an increased gene expression efficiency, and particularly, an expression vector for animal cells including a MAR element and a SAR element, which are gene expression increasing factors, at a 5 end of a promoter, a 3 end of a transcription termination site, or at both of the 5 end of the promoter and the 3 end of the transcription termination site. The expression vector for animal cells according to the present invention exhibits remarkably increased gene expression efficiency as compared to conventional expression vectors for animal cells, such that protein expression of foreign genes may be significantly increased using this expression vector for animal cells. Particularly, the expression vector for animal cells according to the present invention may be useful in that a high-expression cell line may be secured even without MTX amplification.

No. of Pages : 77 No. of Claims : 22

(12) PATENT APPLICATION PUBLICATION
(19) INDIA
(22) Date of filing of Application :19/07/2011
(21) Application No.5216/CHENP/2011 A
(43) Publication Date : 19/12/2014

(54) Title of the invention : SEMICONDUCTOR INPUT CONTROL DEVICE

(51) International classification :G06F3/033
(31) Priority Document No :12/342,001
(32) Priority Date :22/12/2008
(33) Name of priority country :U.S.A.
(86) International Application No :PCT/US2009/069091
Filing Date :22/12/2009
(87) International Publication No :WO 2010/075324 A3
(61) Patent of Addition to Application Number :NA
Filing Date :NA
(62) Divisional to Application Number :NA
Filing Date :NA

(71)**Name of Applicant :**
1)VAGANOV, VLADIMIR
Address of Applicant :129 EI PORTON, LOS GATOS, CALIFORNIA 95032 U.S.A.
2)BELOV, NICKOLAI
(72)**Name of Inventor :**
1)VAGANOV, VLADIMIR
2)BELOV, NICKOLAI

(57) Abstract :
A force input control device suitable for high-volume applications such as cell phones, portable gaming devices and other handheld electronic devices along wit other applications like medical equipment, robotics, security systems and wire-less sensor networks is disclosed. The device can be one-axis or two-axis or three-axis sensitive broadening the range of applications. The device comprises a force sensor die formed within semiconductor substrate and containing a force sensor providing electrical output signal in response to applied external force, and electrical connection elements for mounting and/or wire bonding. Signal conditioning and processing integrated circuit can be integrated within some devices. A package enclosing at least a portion of the force sensor die and comprising a force-transferring element cooperated with the sensor die for transferring an external force to the force sensor die.

No. of Pages : 39 No. of Claims : 24

(12) PATENT APPLICATION PUBLICATION
(19) INDIA
(22) Date of filing of Application :14/06/2012
(21) Application No.5216/CHENP/2012 A
(43) Publication Date : 19/12/2014

(54) Title of the invention : HOUSING, ELECTRONINC APPARATUS, AND METHOD OF HOLDING DISPLAY PANEL

(51) International classification :G09F9/00,G02F1/1333
(31) Priority Document No :2009-285885
(32) Priority Date :17/12/2009
(33) Name of priority country :Japan
(86) International Application No :PCT/JP2010/072822
Filing Date :13/12/2010
(87) International Publication No :WO 2011/074682 A1
(61) Patent of Addition to Application Number :NA
Filing Date :NA
(62) Divisional to Application Number :NA
Filing Date :NA

(71)**Name of Applicant :**
1)NEC CORPORATION
Address of Applicant :7-1, SHIBA 5-CHOME, MINATO-KU, TOKYO 108-8001 Japan
(72)**Name of Inventor :**
1)SHIOGAMA, NAOKI
2)OSAKO, TOMOFUMI

(57) Abstract :
A display panel can be expanded without increasing the size and without educing the sealing function including the waterproof function while the display panel is prevented from deforming due to a strong sealing force. A housing 1 includes a first housing member 3 and a second housing member 4. The first housing member 3 includes a wall 7 surrounding a display-panel-holding-space 11 to hold a display panel 2 being a holding target. The second housing member 4 closes an opening of the display-panel-holding-space 11 whose opening edge is an end race of the wall 7 by coming into contact with or connecting with the end face of the wall 7. A space 13 that goes around the opening of the display-panel-holding-space 11 is formed in a border region including a contacting part or a connecting part of the wall 7 and the second housing member 2. An elastic member 14 is arranged in the space 13. 4n edge part of the display panel 2 is arranged closer to an edge face opposite side to the snd face of the wall 7 than the elastic member 14.

No. of Pages : 27 No. of Claims : 9

(12) PATENT APPLICATION PUBLICATION
(19) INDIA
(22) Date of filing of Application :28/09/2012
(21) Application No.8371/CHENP/2012 A
(43) Publication Date : 19/12/2014

(54) Title of the invention : SYSTEM AND METHOD FOR ACHIEVING ACCELERATED THROUGHPUT

(51) International classification :H04L1/22,H03M13/00,H04L12/56
(31) Priority Document No :12/718650
(32) Priority Date :05/03/2010
(33) Name of priority country :U.S.A.
(86) International Application No :PCT/IB2011/050917
Filing Date :03/03/2011
(87) International Publication No :WO 2011/107963
(61) Patent of Addition to Application Number :NA
Filing Date :NA
(62) Divisional to Application Number :NA
Filing Date :NA

(71)**Name of Applicant :**
1)LIVEQOS INC.
Address of Applicant :535 legget Drive Suite 500 Ottawa ON K2K 3B8 Canada
(72)**Name of Inventor :**
1)WILLIAMS Matthew R.
2)VEMULAPALI Mohan Krishna

(57) Abstract :
Systems and methods for transporting data between two endpoints over an encoded channel are disclosed. Data transmission units (data units) from the source network are received at an encoding component logically located between the endpoints. These first data units are subdivided into second data units and are transmitted to the destination network over the transport network. Also transmitted are encoded or extra second data units that allow the original first data units to be recreated even if some of the second data units are lost. These encoded second data units may be merely copies of the second data units transmitted parity second data units or second data units which have been encoded using erasure correcting coding. At the receiving endpoint the second data units are received and are used to recreate the original first data units.

No. of Pages : 47 No. of Claims : 38

(12) PATENT APPLICATION PUBLICATION
(19) INDIA
(22) Date of filing of Application :28/09/2012
(21) Application No.8372/CHENP/2012 A
(43) Publication Date : 19/12/2014

(54) Title of the invention : NONAQUEOUS ELECTROLYTE SOLUTION ELECTROCHEMICAL ELEMENT USING SAME AND 1 2 DIOXYPROPANE COMPOUND USED IN SAME

(51) International classification :H01M10/0567,C07D317/16,C07D317/30
(31) Priority Document No :2010079620
(32) Priority Date :30/03/2010
(33) Name of priority country :Japan
(86) International Application No :PCT/JP2011/057243
Filing Date :24/03/2011
(87) International Publication No :WO 2011/122449
(61) Patent of Addition to Application Number :NA
Filing Date :NA
(62) Divisional to Application Number :NA
Filing Date :NA

(71)**Name of Applicant :**
1)UBE INDUSTRIES LTD.
Address of Applicant :1978 96 Oaza Kogushi Ube shi Yamaguchi 7558633 Japan
(72)**Name of Inventor :**
1)MIYOSHI Kazuhiro
2)KOTOU Yuichi
3)SHIKITA Shoji

(57) Abstract :
Disclosed are: a nonaqueous electrolyte solution that is capable of improving the low temperature load characteristics after charging and storage at high temperatures; an electrochemical element which uses the nonaqueous electrolyte solution; and a 1 2 dioxypropane compound which is used in the nonaqueous electrolyte solution. Specifically disclosed is a nonaqueous electrolyte solution obtained by dissolving an electrolyte salt in a nonaqueous solvent which is characterized in that a 1 2 dioxypropane compound represented by general formula (I) is contained in the nonaqueous electrolyte solution.

No. of Pages : 76 No. of Claims : 3

(12) PATENT APPLICATION PUBLICATION
(19) INDIA
(22) Date of filing of Application :04/07/2012
(21) Application No.5853/CHENP/2012 A
(43) Publication Date : 19/12/2014

(54) Title of the invention : METHODS AND SYSTEMS FOR COMMUNICATING BETWEEN TRUSTED AND NON TRUSTED VIRTUAL MACHINES

(51) International classification :G06F15/16,G06F13/14
(31) Priority Document No :61/286263
(32) Priority Date :14/12/2009
(33) Name of priority country :U.S.A.
(86) International Application No :PCT/US2010/060309
Filing Date :14/12/2010
(87) International Publication No :WO 2011/081935
(61) Patent of Addition to Application Number :NA
Filing Date :NA
(62) Divisional to Application Number :NA
Filing Date :NA

(71)**Name of Applicant :**
1)CITRIX SYSTEMS INC.
Address of Applicant :851 West Cypress Creek Road Fort Lauderdale Florida 33309 U.S.A.
(72)**Name of Inventor :**
1)PRATT Ian
2)GUYADER Jean
3)HANQUEZ Vincent
4)MCKENZIE James
5)PHILIPSON Ross
6)SMITH Steven
7)NARASIMHAN Kamala
8)HALLS David
9)VAN DER LINDEN Rob

(57) Abstract :
The methods and systems described herein provide for establishing a secure communication channel between a non trusted virtual machine and a trusted virtual machine in a computing device executing a hypervisor hosting the trusted virtual machine the non trusted virtual machine and a third virtual machine. The method includes writing by a non trusted virtual machine a first string of data to a region of memory of the computing device. The method also includes detecting by a trusted virtual machine the first string of data written to the region of memory. The method further includes establishing a communication channel between the trusted virtual machine and the non trusted virtual machine by locking by the trusted virtual machine and responsive to the detection the region of memory for the duration of the communication to prevent a third virtual machine from accessing the region of memory.

No. of Pages : 206 No. of Claims : 144

(12) PATENT APPLICATION PUBLICATION
(19) INDIA
(22) Date of filing of Application :24/08/2012
(21) Application No.7382/CHENP/2012 A
(43) Publication Date : 19/12/2014

(54) Title of the invention : EXERCISE GENOTYPING

(51) International classification :C12Q1/68
(31) Priority Document No :2010900472
(32) Priority Date :05/02/2010
(33) Name of priority country :Australia
(86) International Application No :PCT/AU2011/000114
Filing Date :04/02/2011
(87) International Publication No :WO/2011/094815
(61) Patent of Addition to Application Number :NA
Filing Date :NA
(62) Divisional to Application Number :NA
Filing Date :NA

(71)**Name of Applicant :**
1)GENETICS INVESTMENTS PTY. LTD.
Address of Applicant :c/- EGALevel 18499 St Kilda Road Melbourne Victoria 3004 Australia
(72)**Name of Inventor :**
1)SMITH Graeme John
2)ARGYROU Nick
3)ARGYROU Helen
4)BANAHARIS Harry

(57) Abstract :
The invention relates to a method for identifying a genetic predisposition of a subject to increased exercise endurance increased muscular power muscle damage and/or injury risk a method for formulating an exercise program for improving physical performance a kit suitable for use in the methods and use of the method for improving physical performance.

No. of Pages : 35 No. of Claims : 28

(12) PATENT APPLICATION PUBLICATION
(19) INDIA
(22) Date of filing of Application :03/10/2012
(21) Application No.8424/CHENP/2012 A
(43) Publication Date : 19/12/2014

(54) Title of the invention : TEXTILE PRODUCT HAVING A LIGHTING FUNCTION AND METHOD FOR THE PRODUCTION THEREOF

(51) International classification :G09F13/22,G09F21/02,G09F9/33
(31) Priority Document No :10160191.2
(32) Priority Date :16/04/2010
(33) Name of priority country :EPO
(86) International Application No :PCT/IB2011/051538
Filing Date :11/04/2011
(87) International Publication No :WO/2011/128825
(61) Patent of Addition to Application Number :NA
Filing Date :NA
(62) Divisional to Application Number :NA
Filing Date :NA

(71)**Name of Applicant :**
1)KONINKLIJKE PHILIPS ELECTRONICS N.V.
Address of Applicant :GROENEWOUDSEWEG 1 EINDHOVEN 5621 BA NETHERLANDS
(72)**Name of Inventor :**
1)VAN HERPEN Maarten Marinus Johannes Wilhelmus
2)JOCHIJMS Paul Antonius Emil
3)WILLEMSEN Oscar Hendrikus

(57) Abstract :
The invention provides a textile product (1) having a lighting function. The textile product (1) comprises (a) a coated textile structure (2) comprising a textile (200) with a first textile coating (211) at a first side (210) and optionally a second textile coating (222) at a second side (220) of the textile (200); (b) a lighting unit(300) comprising a substrate (310) with a substrate surface (311) and a light source (330) comprised by the substrate surface (311) wherein the lighting unit (300) is arranged within the coated textile structure (2) wherein the lighting unit (300) is arranged to provide light (331) through the first textile coating (211) wherein the substrate surface (311) further comprises an electrically conductive connector part (340) and wherein the connector part (340) is arranged to supply electrical power to the light source (330) when electrically connected to an electrical power source (500).

No. of Pages : 32 No. of Claims : 15

(12) PATENT APPLICATION PUBLICATION
(19) INDIA
(22) Date of filing of Application :03/10/2012
(21) Application No.8425/CHENP/2012 A
(43) Publication Date : 19/12/2014

(54) Title of the invention : NUCLEAR MAGNETIC RESONANCE MAGNETOMETER EMPLOYING OPTICALLY INDUCED HYPERPOLARIZATION

(51) International classification :G01R33/24
(31) Priority Document No :61/326775
(32) Priority Date :22/04/2010
(33) Name of priority country :U.S.A.
(86) International Application No :PCT/IB2011/051144
Filing Date :18/03/2011
(87) International Publication No :WO/2011/132092
(61) Patent of Addition to Application Number :NA
Filing Date :NA
(62) Divisional to Application Number :NA
Filing Date :NA

(71)**Name of Applicant :**
1)KONINKLIJKE PHILIPS ELECTRONICS N.V.
Address of Applicant :GROENEWOUDSEWEG 1 EINDHOVEN 5621 BA NETHERLANDS
(72)**Name of Inventor :**
1)ELGORT Daniel R.
2)ALBU Lucian Remus

(57) Abstract :
A magnetometer includes: a sample (10) comprising a selected nuclear species; an optical source (12) configured to hyperpolarize the selected nuclear species of the sample by illuminating the sample with optical radiation (14) having orbital angular momentum; a radio frequency generator (20 26 30 150 152) configured to input radio frequency energy (32) to the hyperpolarized selected nuclear species of the sample over a probed range of radio frequencies; a detector (20 26 40 150 154 164 166) configured to detect a frequency of nuclear magnetic resonance excited in the hyperpolarized selected nuclear species of the sample by the input radio frequency energy; and a signal output generator (64 66) configured to output a signal indicative of magnetic field strength based on the detected frequency of nuclear magnetic resonance.

No. of Pages : 26 No. of Claims : 20

(12) PATENT APPLICATION PUBLICATION
(19) INDIA
(22) Date of filing of Application :18/03/2013
(21) Application No.2141/CHENP/2013 A
(43) Publication Date : 19/12/2014

(54) Title of the invention : CATHODE DEVICE FOR ALUMINUM PRODUCTION AND USE OF THE CATHODE IN ALUMINUM PRODUCTION

(51) International classification :C25C3/08,C25C7/02
(31) Priority Document No :102010039638.9
(32) Priority Date :23/08/2010
(33) Name of priority country :Germany
(86) International Application No :PCT/EP2011/064402
Filing Date :22/08/2011
(87) International Publication No :WO 2012/025498
(61) Patent of Addition to Application Number :NA
Filing Date :NA
(62) Divisional to Application Number :NA
Filing Date :NA

(71)**Name of Applicant :**
1)SGL CARBON SE
Address of Applicant :Shnleinstr. 8 65201 Wiesbaden Germany
(72)**Name of Inventor :**
1)HILTMANN Frank

(57) Abstract :
The invention relates to a cathode (10) and to a device (100) for melt flow-based metal production and provides uses for the cathode (10) and the device (100). A core aspect of the present invention consists in designing the cathode (10) to have at least two layers, that is, a process-side process layer (12) made of or with an abrasion-resistant process material (12), and a current transfer layer (11) made with or of an electrically conductive, and in particular low-impedance, current transfer material (11). Furthermore, the process side (lOo) is designed in a profiled manner with a recess (10a, 12a) and/or an elevation (lOe, 12e) , or with a plurality of recesses (10a, 12a) and/or elevations (lOe, 12e).

No. of Pages : 44 No. of Claims : 17

(12) PATENT APPLICATION PUBLICATION
(19) INDIA
(22) Date of filing of Application :22/01/2014
(21) Application No.525/CHENP/2014 A
(43) Publication Date : 19/12/2014

(54) Title of the invention : DYNAMIC COLLIMATION

(51) International classification :G01R
(31) Priority Document No :61/508180
(32) Priority Date :15/07/2011
(33) Name of priority country :U.S.A.
(86) International Application No :PCT/IB2012/053417
Filing Date :04/07/2012
(87) International Publication No :WO 2013/011403
(61) Patent of Addition to Application Number :NA
Filing Date :NA
(62) Divisional to Application Number :NA
Filing Date :NA

(71)**Name of Applicant :**
1)KONINKLIJKE PHILIPS N.V.
Address of Applicant :High Tech Campus 5 NL 5656 AE Eindhoven Netherlands
(72)**Name of Inventor :**
1)HEROLD Mark Douglas

(57) Abstract :
A method includes performing a three dimensional volume scan of a region of interest located in a portion of an object or subject in an examination region including dynamically collimating a radiation beam used to perform the scan so that a geometry and/or location of the radiation beam tracks during the scan to a geometry and/or location of the region of interest wherein the region of interest is a sub region of the portion of the object or subject in the examination region.

No. of Pages : 22 No. of Claims : 21

(12) PATENT APPLICATION PUBLICATION
(19) INDIA
(22) Date of filing of Application :31/07/2012
(21) Application No.6709/CHENP/2012 A
(43) Publication Date : 19/12/2014

(54) Title of the invention : LIGHT EMITTING DEVICE WITH MOLDED WAVELENGTH CONVERTING LAYER

(51) International classification :H01L33/50,H01L33/56
(31) Priority Document No :12/706149
(32) Priority Date :16/02/2010
(33) Name of priority country :U.S.A.
(86) International Application No :PCT/IB2011/050472
Filing Date :03/02/2011
(87) International Publication No :WO/2011/101764
(61) Patent of Addition to Application Number :NA
Filing Date :NA
(62) Divisional to Application Number :NA
Filing Date :NA

(71)**Name of Applicant :**
1)KONINKLIJKE PHILIPS ELECTRONICS N.V.
Address of Applicant :GROENEWOUDSEWEG 1 EINDHOVEN 5621 BA NETHERLANDS
2)PHILIPS LUMILEDS LIGHTING COMPANY LLC
(72)**Name of Inventor :**
1)BASIN Grigoriy
2)MARTIN Paul S.

(57) Abstract :
A flexible film (14 16) comprising a wavelength converting material (14) is positioned over a light source. The flexible film is conformed to a predetermined shape. In some embodiments the light source is a light emitting diode (10) mounted on a support substrate (12). The diode is aligned with an indentation in a mold (20) such that the flexible film is disposed between the support substrate and the mold. Transparent molding material is disposed between the support substrate and the mold. The support substrate and the mold are pressed together to cause the molding material to fill the indentation. The flexible film conforms to the shape of the light source or the mold.

No. of Pages : 17 No. of Claims : 13

(12) PATENT APPLICATION PUBLICATION
(19) INDIA
(22) Date of filing of Application :28/01/2013
(21) Application No.671/CHENP/2013 A
(43) Publication Date : 19/12/2014

(54) Title of the invention : MAGNETIC STORAGE ELEMENT COMPRISING A FUNCTIONAL LAYER IN THE PINNED LAYERS AND MANUFACTURING METHOD THEREOF

(51) International classification :H01L43/08,H01L27/22
(31) Priority Document No :12/837535
(32) Priority Date :16/07/2010
(33) Name of priority country :U.S.A.
(86) International Application No :PCT/US2011/043992
Filing Date :14/07/2011
(87) International Publication No :WO 2012/009524
(61) Patent of Addition to Application Number :NA
Filing Date :NA
(62) Divisional to Application Number :NA
Filing Date :NA

(71)**Name of Applicant :**
1)QUALCOMM INCORPORATED
Address of Applicant :Attn: International Ip Administration 5775 Morehouse Drive San Diego California 92121 U.S.A.
(72)**Name of Inventor :**
1)CHEN Wei Chuan
2)KANG Seung H.
3)ZHU Xiaochun
4)LI Xia

(57) Abstract :
A magnetic tunnel junction (MTJ) storage element comprises a pinned layer stack (520) and functional layer. The pinned layer stack is formed of a plurality of layers at least one comprising a bottom pinned layer (206a 206b) a coupling layer (208) and a top pinned layer (210a 210b). The functional layers (540 560) are disposed in the bottom pinned layer and/or the top pinned layer.

No. of Pages : 30 No. of Claims : 36

(12) PATENT APPLICATION PUBLICATION
(19) INDIA
(22) Date of filing of Application :29/08/2012
(21) Application No.7476/CHENP/2012 A
(43) Publication Date : 19/12/2014

(54) Title of the invention : WIRELESS POWER RECEIVER

(51) International classification :H02J17/00,H02J7/02,H02M7/217
(31) Priority Document No :61/308,246
(32) Priority Date :25/02/2010
(33) Name of priority country :U.S.A.
(86) International Application No :PCT/US2011/024931
Filing Date :15/02/2011
(87) International Publication No :WO/2011/106202
(61) Patent of Addition to Application Number :NA
Filing Date :NA
(62) Divisional to Application Number :NA
Filing Date :NA

(71)**Name of Applicant :**
1)QUALCOMM INCORPORATED
Address of Applicant :ATTN: International IP Administration 5775 Morehouse Drive San Diego California 92121-1714 U.S.A.
(72)**Name of Inventor :**
1)LINDA S IRISH

(57) Abstract :
Exemplary embodiments are directed to conveying wireless power received at a receive antenna to a load. A method may include coupling each terminal of the antenna to a ground voltage during a charging phase for storing energy within the antenna. The method may further include coupling at least one terminal of the antenna to an output during an output phase for transferring energy from the antenna to the output.

No. of Pages : 35 No. of Claims : 33

(12) PATENT APPLICATION PUBLICATION
(19) INDIA
(22) Date of filing of Application :08/10/2012
(21) Application No.8568/CHENP/2012 A
(43) Publication Date : 19/12/2014

(54) Title of the invention : MULTI-USER INTERACTIVE MOTION TRACKING USING SENSORS

(51) International classification :G01S5/00,G01C21/16
(31) Priority Document No :12/765,745
(32) Priority Date :22/04/2010
(33) Name of priority country :U.S.A.
(86) International Application No :PCT/US2011/033640
Filing Date :22/04/2011
(87) International Publication No :WO/2011/133910
(61) Patent of Addition to Application Number :NA
Filing Date :NA
(62) Divisional to Application Number :NA
Filing Date :NA

(71)**Name of Applicant :**
1)QUALCOMM INCORPORATED
Address of Applicant :Attn: International IP Administration 5775 Morehouse Drive San Diego California 92121-1714 United States of America
(72)**Name of Inventor :**
1)HARRAT Newfel
2)SHEYNBLAT Leonid

(57) Abstract :
Mobile platforms exchange their positions in a three-dimensional common reference frame based on data from their respective inertial sensors. The mobile platforms establish the common reference frame e.g. by contacting each other. The position of each mobile platform is updated in its local reference frame and the position is transformed into a position in the common reference frame. The position in the common reference frame may then be transmitted to the other mobile platform which can then determine the spatial relationship between the mobile platforms based on the received common reference frame position. Either mobile platform may pass the common reference frame to additional mobile platforms by establishing a new reference frame with a new mobile platform generating a transformation from the new reference frame to the common reference frame and providing the transformation to the new mobile platform.

No. of Pages : 25 No. of Claims : 29

(12) PATENT APPLICATION PUBLICATION
(19) INDIA
(22) Date of filing of Application :14/08/2012
(21) Application No.7073/CHENP/2012 A
(43) Publication Date : 19/12/2014

(54) Title of the invention : METHOD AND APPARATUS FOR MITIGATING DATA LOSS DURING AUTONOMOUS SYSTEM INFORMATION READING

(51) International classification :H04W48/16
(31) Priority Document No :61/295,899
(32) Priority Date :18/01/2010
(33) Name of priority country :U.S.A.
(86) International Application No :PCT/US2011/021575
Filing Date :18/01/2011
(87) International Publication No :WO/2011/088468
(61) Patent of Addition to Application Number :NA
Filing Date :NA
(62) Divisional to Application Number :NA
Filing Date :NA

(71)**Name of Applicant :**
1)QUALCOMM INCORPORATED
Address of Applicant :Attn:International IP Administration 5775 Morehouse Drive San Diego California 92121-1714 U.S.A.
(72)**Name of Inventor :**
1)TINGFANG JI
2)PETER GAAL
3)GENE FONG
4)KAPIL BHATTAD
5)YONGBIN WEI

(57) Abstract :
Techniques for mitigating data loss during autonomous system information (SI) reading by a user equipment (UE) are described. For autonomous SI reading, the UE may autonomously determine when to read system information from neighbor cells and may not inform a serving cell. In one design, the UE may autonomously select a SI reading gap for reading system information from a neighbor cell. During the SI reading gap, the UE may suspend reception of downlink transmission from the serving cell, receive system information from the neighbor cell, and maintain capability to transmit on the uplink to the serving cell. In one design, the serving cell may determine SI reading gaps autonomously selected by the UE for reading system information from neighbor cells. The serving cell may communicate with the UE by accounting for the SI reading gaps of the UE, e.g., may suspend communication with the UE during the SI reading gaps.

No. of Pages : 44 No. of Claims : 46

(12) PATENT APPLICATION PUBLICATION
(19) INDIA
(22) Date of filing of Application :14/08/2012
(21) Application No.7076/CHENP/2012 A
(43) Publication Date : 19/12/2014

(54) Title of the invention : FLEXIBLE AND SCALABLE COMBINED INNOVATION CODEBOOK FOR USE IN CELP CODER AND DECODER

(51) International classification :G10L19/12
(31) Priority Document No :61/324,191
(32) Priority Date :14/04/2010
(33) Name of priority country :U.S.A.
(86) International Application No :PCT/CA2011/000398
Filing Date :08/04/2011
(87) International Publication No :WO/2011/127569
(61) Patent of Addition to Application Number :NA
Filing Date :NA
(62) Divisional to Application Number :NA
Filing Date :NA

(71)**Name of Applicant :**
1)VOICEAGE CORPORATION
Address of Applicant :750 Lucerne Road Suite 250 Town of Mount Royal Quebec H3R 2H6 Canada
(72)**Name of Inventor :**
1)BRUNO BESSETTE

(57) Abstract :
In a CELP coder, a combined innovation codebook coding device comprises a pre-quantizer of a first, adaptive-codebook excitation residual, and a CELP innovation-codebook search module responsive to a second excitation residual produced from the first, adaptive-codebook excitation residual. In a CELP decoder, a combined innovation codebook comprises a de-quantizer of pre-quantized coding parameters into a first excitation contribution, and a CELP innovation-codebook structure responsive to CELP innovation-codebook parameters to produce a second excitation contribution.

No. of Pages : 26 No. of Claims : 38

(12) PATENT APPLICATION PUBLICATION
(19) INDIA
(22) Date of filing of Application :05/10/2012

(21) Application No.8523/CHENP/2012 A
(43) Publication Date : 19/12/2014

(54) Title of the invention : LIGHT SOURCE

(51) International classification :H01L25/075,H01J61/40,F21S8/00
(31) Priority Document No :10162113.4
(32) Priority Date :06/05/2010
(33) Name of priority country :EPO
(86) International Application No :PCT/IB2011/051804
Filing Date :26/04/2011
(87) International Publication No :WO/2011/138707
(61) Patent of Addition to Application Number :NA
Filing Date :NA
(62) Divisional to Application Number :NA
Filing Date :NA

(71)**Name of Applicant :**
1)KONINKLIJKE PHILIPS ELECTRONICS N.V.
Address of Applicant :GROENEWOUDSEWEG 1 EINDHOVEN 5621 BA NETHERLANDS
(72)**Name of Inventor :**
1)DONNERS Maurice Alexander Hugo

(57) Abstract :
The invention relates to a light source for generating light having a spectral emittance in at least a part of the range of 380 nm to 680 nm. The light has a spectral power distribution () as a function of the wavelength over a first range of 600 nm <= <= 680 nm a second range of 505 nm <= <= 600 nm and a third range of 380 nm <= <= 505 nm. A first ratio of the integral power distribution over said first range to that of a range of 380 nm <= <= 680 nm is given by the relation: Formula (I) wherein 0.65 <= Pl <= 0.95 A second ratio of the integral power distribution over said second range to that of a range of 380 nm <= <= 680 nm is given by the relation: C

No. of Pages : 26 No. of Claims : 11

(12) PATENT APPLICATION PUBLICATION
(19) INDIA
(22) Date of filing of Application :16/10/2012
(21) Application No.8856/CHENP/2012 A
(43) Publication Date : 19/12/2014

(54) Title of the invention : PLL CHARGE PUMP WITH REDUCED COUPLING TO BIAS NODES

(51) International classification :H03L7/00
(31) Priority Document No :12/763,418
(32) Priority Date :20/04/2010
(33) Name of priority country :U.S.A.
(86) International Application No :PCT/US2011/033297
Filing Date :20/04/2011
(87) International Publication No :WO/2011/133699
(61) Patent of Addition to Application Number :NA
Filing Date :NA
(62) Divisional to Application Number :NA
Filing Date :NA

(71)**Name of Applicant :**
1)QUALCOMM INCORPORATED
Address of Applicant :5775 Morehouse Drive San Diego CA 92121 U.S.A.
(72)**Name of Inventor :**
1)ASHWIN RAGHUNATHAN
2)SAMEER WADHWA
3)MARZIO PEDRALINOY

(57) Abstract :
A charge pump includes an UP current mirror and a DN current mirror. The UP current mirror is controlled by an input UP signal and supplies charge onto an output node. The DN current mirror is controlled by an input DN signal and draws charge from the output node. The input UP and DN signals may be received from a phase detector in a Phase-Locked Loop (PLL). To prevent disturbances on bias nodes of the UP and DN current mirrors that otherwise might occur, replica circuits of portions of the UP and DN current mirrors are provided. Each replica circuit is coupled to a bias node of a corresponding current mirror, but is controlled by an input signal of opposite polarity to the input signal that controls the current mirror so that the replica circuit creates disturbances that tend to counteract disturbances created by switching of the current mirror.

No. of Pages : 27 No. of Claims : 20

(12) PATENT APPLICATION PUBLICATION
(19) INDIA
(22) Date of filing of Application :19/12/2013
(21) Application No.10155/CHENP/2013 A
(43) Publication Date : 19/12/2014

(54) Title of the invention : FLUID EJECTION DEVICE WITH FLUID DISPLACEMENT ACTUATOR AND RELATED METHODS

(51) International classification :B41J2/175,B41J2/14,B41J2/145
(31) Priority Document No :NA
(32) Priority Date :NA
(33) Name of priority country :NA
(86) International Application No:PCT/US2011/050072
Filing Date :31/08/2011
(87) International Publication No :WO 2013/032471
(61) Patent of Addition to Application Number :NA
Filing Date :NA
(62) Divisional to Application Number :NA
Filing Date :NA

(71)**Name of Applicant :**
1)HEWLETT PACKARD DEVELOPMENT COMPANY L.P.
Address of Applicant :11445 Compaq Center Drive W. Houston Texas 77070 U.S.A.
(72)**Name of Inventor :**
1)GOVYADINOV Alexander
2)NAELI Kianoush
3)CRUZ URIBE Tony S.

(57) Abstract :
An embodiment a method of circulating fluid in a fluid ejection device includes generating compressive and expansive fluid displacements of different durations from a first actuator located asymmetrically within a fluidic channel between a first fluid feedhole and a nozzle while generating no fluid displacements from a second actuator located asymmetrically within the channel between the nozzle and a second fluid feedhole.

No. of Pages : 49 No. of Claims : 19

(12) PATENT APPLICATION PUBLICATION
(19) INDIA
(22) Date of filing of Application :19/12/2013
(21) Application No.10157/CHENP/2013 A
(43) Publication Date : 19/12/2014

(54) Title of the invention : MEDIUM DIFFERENTIATION DEVICE

(51) International classification :G07D7/00,G07D7/04,G07D7/12
(31) Priority Document No :2011207805
(32) Priority Date :22/09/2011
(33) Name of priority country :Japan
(86) International Application No :PCT/JP2012/064959
Filing Date :12/06/2012
(87) International Publication No:WO 2013/042407
(61) Patent of Addition to Application Number :NA
Filing Date :NA
(62) Divisional to Application Number :NA
Filing Date :NA

(71)**Name of Applicant :**
1)OKI ELECTRIC INDUSTRY CO. LTD.
Address of Applicant :1 7 12 Toranomon Minato ku Tokyo 1058460 Japan
(72)**Name of Inventor :**
1)MAEKAWA Kinya
2)HIGUCHI Hiroaki

(57) Abstract :
A paper money differentiation unit of an automatic teller comprises a magnetic detector which detects the magnetism of paper money the magnetic detector comprises a pressing member made of a resin material and provided with a bearing formed by piercing and the bearing rotatably supports a shaft of a guide roller which presses the paper money to the lower surface of a magnetic sensor. The guide roller rotates while the paper money moves through a transfer path but does not change the magnetic field of the surroundings with the rotation because a fixing member using a resin material is used for the bearing and a non magnetic material is used for the shaft. Thereby even if the guide roller rotates the magnetic field of the surroundings does not change and thus although the magnetic detector is located near the guide roller the magnetism of the paper money can be precisely detected by a magnetic head of the magnetic sensor.

No. of Pages : 62 No. of Claims : 15

(12) PATENT APPLICATION PUBLICATION
(19) INDIA
(22) Date of filing of Application :27/12/2012

(21) Application No.10852/CHENP/2012 A
(43) Publication Date : 19/12/2014

(54) Title of the invention : METHOD OF ASSESSING CHEMICALS IN PRODUCED FLUIDS

(51) International classification	:G01N21/75,G01N21/59,G01N21/64
(31) Priority Document No	:1008984.5
(32) Priority Date	:28/05/2010
(33) Name of priority country	:U.K.
(86) International Application No	:PCT/GB2011/000823
Filing Date	:27/05/2011
(87) International Publication No	:WO/2011/148150
(61) Patent of Addition to Application Number	:NA
Filing Date	:NA
(62) Divisional to Application Number	:NA
Filing Date	:NA

(71)**Name of Applicant :**
1)LUX INNOVATE LIMITED
Address of Applicant :Unit 5.3 21 Research Avenue South Heriot Watt Research Park Riccarton Edinburgh EH14 4AP United Kingdom
(72)**Name of Inventor :**
1)MAC KAY Fiona
2)PERFECT Emma
3)ROWLEY-WILLIAMS Catherine
4)FULLER Anne-Marie

(57) Abstract :
Method of monitoring water-soluble treatment chemicals in a fluid that is immiscible with water and which may or may not contain some aqueous fluid the method using at least one reagent that produces an optically detectable product the detection step can take place without separation of the aqueous phase containing the treatment chemicals from the fluid immiscible with water.

No. of Pages : 42 No. of Claims : 56

(12) PATENT APPLICATION PUBLICATION
(19) INDIA
(22) Date of filing of Application :14/06/2013
(21) Application No.2593/CHE/2013 A
(43) Publication Date : 19/12/2014

(54) Title of the invention : PROCESS FOR CABAZITAXEL

(51) International classification :C07D305/14
(31) Priority Document No :NA
(32) Priority Date :NA
(33) Name of priority country :NA
(86) International Application No :NA
Filing Date :NA
(87) International Publication No : NA
(61) Patent of Addition to Application Number :NA
Filing Date :NA
(62) Divisional to Application Number :NA
Filing Date :NA

(71)**Name of Applicant :**
1)HETERO RESEARCH FOUNDATION
Address of Applicant :HETERO DRUGS LIMITED, HETERO COMPORATE, 7-2-A2, INDUSTRIAL ESTATES, SANATH NAGAR, HYDERABAD - 500 018 Andhra Pradesh India
(72)**Name of Inventor :**
1)PARTHASARADHI REDDY, BANDI
2)RATHNAKAR REDDY, KURA
3)MURALIDHARA REDDY, DASARI
4)VENKAT NARSIMHA REDDY, ADULLA
5)VAMSI KRISHNA, BANDI

(57) Abstract :
The present invention provides an improved process for the preparation of 4a-acetoxy-2a-benzoyloxy-5P,20-epoxy-ip,13a-dihydroxy-7p,10P-dimethoxy-9-oxo-l 1-taxene (7p\10P-dimethoxy-10-deacetoxybaccatin III). The present invention also provides a novel process for the preparation of cabazitaxel.

No. of Pages : 15 No. of Claims : 14

(12) PATENT APPLICATION PUBLICATION
(19) INDIA
(22) Date of filing of Application :17/10/2012
(21) Application No.8869/CHENP/2012 A
(43) Publication Date : 19/12/2014

(54) Title of the invention : NETWORK-ASSISTED PEER DISCOVERY

(51) International classification :H04W8/00
(31) Priority Document No :61/324,606
(32) Priority Date :15/04/2010
(33) Name of priority country :U.S.A.
(86) International Application No :PCT/US2011/032676
Filing Date :15/04/2011
(87) International Publication No :WO 2011/130623
(61) Patent of Addition to Application Number :NA
Filing Date :NA
(62) Divisional to Application Number :NA
Filing Date :NA

(71)**Name of Applicant :**
1)QUALCOMM INCORPORATED
Address of Applicant :ATTN: International IP Administration 5775 Morehouse Drive San Diego California 92121-1714 U.S.A.
(72)**Name of Inventor :**
1)SIDDHARTHA MALLIK
2)RENQIU WANG
3)Ravi PALANKI
4)NAGA BHUSHAN

(57) Abstract :
Techniques for performing network-assisted peer discovery to enable peer-to-peer (P2P) communication are described. In one design, a device registers with a network entity (e.g., a directory agent) so that the presence of the device and possibly other information about the device can be made known to the network entity. The network entity collects similar information from other devices. The device sends a request to the network entity, e.g., during or after registration. The request includes information used to match the device with other devices, e.g., information about service(s) provided by the device and/or service(s) requested by the device. The directory agent matches requests received from all devices, determines a match between the device and at least one other device, and sends a notification to perform peer discovery. The device performs peer discovery in response to receiving the notification from the network entity.

No. of Pages : 38 No. of Claims : 11

(12) PATENT APPLICATION PUBLICATION
(19) INDIA
(22) Date of filing of Application :12/10/2012
(21) Application No.8750/CHENP/2012 A
(43) Publication Date : 19/12/2014

(54) Title of the invention : SYSTEM AND METHOD FOR ESTIMATING UPPER AIRWAY RESISTANCE AND LUNG COMPLIANCE EMPLOYING INDUCED CENTRAL APNEAS

(51) International classification :A61B5/087
(31) Priority Document No :61/345221
(32) Priority Date :17/05/2010
(33) Name of priority country :U.S.A.
(86) International Application No :PCT/IB2011/051848
Filing Date :27/04/2011
(87) International Publication No : NA
(61) Patent of Addition to Application Number :NA
Filing Date :NA
(62) Divisional to Application Number :NA
Filing Date :NA

(71)**Name of Applicant :**
1)KONINKLIJKE PHILIPS ELECTRONICS N.V.
Address of Applicant :GROENEWOUDSEWEG 1 EINDHOVEN 5621 BA NETHERLANDS
(72)**Name of Inventor :**
1)O™CONNOR Nathan Francis

(57) Abstract :
A method of estimating upper airway resistance or lung compliance of a patient is provided that includes inducing a central apnea in the patient providing a known pressure stimulus comprising a flow of breathing gas having a known pressure level to the patient while the patient is experiencing the central apnea determining a patient flow-related parameter such as flow rate and/or flow volume associated with the known pressure stimulus and estimating the upper airway resistance or the lung compliance of the patient using the patient flow-related parameter using for example and without limitation an input-output system identification method.

No. of Pages : 19 No. of Claims : 17

(12) PATENT APPLICATION PUBLICATION
(19) INDIA
(22) Date of filing of Application :12/10/2012
(21) Application No.8751/CHENP/2012 A
(43) Publication Date : 19/12/2014

(54) Title of the invention : TEMPERATURE DISTRIBUTION DETERMINING APPARATUS

(51) International classification :A61B18/00,A61B18/12,A61N7/00
(31) Priority Document No :10162922.8
(32) Priority Date :17/05/2010
(33) Name of priority country :EPO
(86) International Application No :PCT/IB2011/052029
Filing Date :09/05/2011
(87) International Publication No :WO 2011/145020
(61) Patent of Addition to Application Number :NA
Filing Date :NA
(62) Divisional to Application Number :NA
Filing Date :NA

(71)**Name of Applicant :**
1)KONINKLIJKE PHILIPS ELECTRONICS N.V.
Address of Applicant :GROENEWOUDSEWEG 1 EINDHOVEN 5621 BA NETHERLANDS
(72)**Name of Inventor :**
1)KUHN Michael Harald

(57) Abstract :
The invention relates to a temperature distribution determining apparatus for determining a temperature distribution within an object caused by applying energy to the object. A temperature distribution measuring unit (6 7) measures a spatially and temporally dependent first temperature distribution in the object (3) while the energy is applied to the object (3) such that the object (3) is heated to a temperature within a first temperature range and a temperature distribution estimating unit (5) estimates a spatially and temporally dependent second temperature distribution in the object (3) within a second temperature range which is different to the first temperature range based on the spatial and temporal dependence of the measured first temperature distribution. Since temperature distributions can be obtained not only in the first temperature range but also in the second temperature range the overall temperature range in which the temperature distribution can be determined can be increased.

No. of Pages : 45 No. of Claims : 15

(12) PATENT APPLICATION PUBLICATION
(19) INDIA
(22) Date of filing of Application :12/10/2012
(21) Application No.8752/CHENP/2012 A
(43) Publication Date : 19/12/2014

(54) Title of the invention : AUTOFOCUS IMAGING

(51) International classification :G02B21/24
(31) Priority Document No :10305520.8
(32) Priority Date :18/05/2010
(33) Name of priority country :EPO
(86) International Application No :PCT/IB2011/051963
Filing Date :04/05/2011
(87) International Publication No :WO 2011/145016
(61) Patent of Addition to Application Number :NA
Filing Date :NA
(62) Divisional to Application Number :NA
Filing Date :NA

(71)**Name of Applicant :**
1)KONINKLIJKE PHILIPS ELECTRONICS N.V.
Address of Applicant :GROENEWOUDSEWEG 1 EINDHOVEN 5621 BA NETHERLANDS
(72)**Name of Inventor :**
1)HULSKEN Bas
2)STALLINGA Sjoerd

(57) Abstract :
The present invention relates to the field of digital pathology and in particular to whole slide scanners. Autofocus imaging can be performed by sampling a first number of pixels of a primary image sensor and sampling a second number of pixels of an autofocus image sensor wherein the second number is between one quarter and three quarters of the first number. Thus continuous autofocus for rapid light scanning may be provided based on an additional image sensor that is tilted with respect to the optical axis.

No. of Pages : 24 No. of Claims : 15

(12) PATENT APPLICATION PUBLICATION
(19) INDIA
(22) Date of filing of Application :17/10/2012
(21) Application No.8912/CHENP/2012 A
(43) Publication Date : 19/12/2014

(54) Title of the invention : MAGNETIC RESONANCE IMAGING GRADIENT COIL MAGNET ASSEMBLY AND SYSTEM

(51) International classification :G01R33/385
(31) Priority Document No :10163363.4
(32) Priority Date :20/05/2010
(33) Name of priority country :EPO
(86) International Application No :PCT/IB2011/052102
Filing Date :13/05/2011
(87) International Publication No : NA
(61) Patent of Addition to Application Number :NA
Filing Date :NA
(62) Divisional to Application Number :NA
Filing Date :NA

(71)**Name of Applicant :**
1)KONINKLIJKE PHILIPS ELECTRONICS N.V.
Address of Applicant :GROENEWOUDSEWEG 1 EINDHOVEN 5621 BA NETHERLANDS
(72)**Name of Inventor :**
1)OVERWEG Johannes Adrianus

(57) Abstract :
magnetic resonance imaging magnet assembly (100) comprising: -a magnet (102) adapted for generating a main magnetic field for aligning the magnetic spins of nuclei of a subject (502) located within an imaging volume (504); and -a gradient coil (103) for generating a gradient magnetic field for spatial encoding of the magnetic resonance signal of spins of nuclei within the imaging volume wherein the gradient coil is adapted to be mounted into the magnet wherein the gradient coil comprises: - a first gradient coil section (112) wherein the first gradient coil section comprises a first rigid element (113) - a second gradient coil section (114) wherein the second gradient coil section also comprises a second rigid element (115) -

No. of Pages : 25 No. of Claims : 15

(12) PATENT APPLICATION PUBLICATION
(19) INDIA
(22) Date of filing of Application :30/11/2012
(21) Application No.10089/CHENP/2012 A
(43) Publication Date : 19/12/2014

(54) Title of the invention : TWO -WIRE INDUSTRIAL PROCESS FIELD DEVICE MAXIMIZING THE POWER AVAILABLE TO THE CIRCUITRY OF THE DEVICE AT MINIMUM CONTROL LOOP CURRENT

(51) International classification :G05B19/042
(31) Priority Document No :61/333,508
(32) Priority Date :11/05/2010
(33) Name of priority country :U.S.A.
(86) International Application No :PCT/US2011/035676
Filing Date :09/05/2011
(87) International Publication No :WO/2011/143081
(61) Patent of Addition to Application Number :NA
Filing Date :NA
(62) Divisional to Application Number :NA
Filing Date :NA

(71)**Name of Applicant :**
1)ROSEMOUNT INC.
Address of Applicant :12001 Technology Drive Eden Prairie MN 55344 United States of America
(72)**Name of Inventor :**
1)SCHULTE John P.

(57) Abstract :
A process field device (104) for use in monitoring or controlling an industrial process includes first and second loop terminals (162 164) configured to couple to a two- wire industrial process control loop (108). Field device circuitry (168) is configured to monitor or control a process variable of the industrial process. The field device circuitry (168) is powered by power connections from the two-wire industrial process control loop (108). A current regulator (220) is connected in series with the two-wire industrial process control loop (108) the first and second loop terminals (162 164) and the field device circuitry (168). A voltage regulator (282) is connected in parallel with the current regulator (220) and in series with the two-wire industrial process control loop (108) first and second loop terminals (162 164) and field device circuitry (168).

No. of Pages : 20 No. of Claims : 18

(12) PATENT APPLICATION PUBLICATION
(19) INDIA
(22) Date of filing of Application :24/12/2012
(21) Application No.10721/CHENP/2012 A
(43) Publication Date : 19/12/2014

(54) Title of the invention : PHYSICAL RESOURCE BLOCK (PRB) BUNDLING FOR OPEN LOOP BEAMFORMING

(51) International classification :H04L5/00,H04B7/04,H04L25/02
(31) Priority Document No :61/357,005
(32) Priority Date :21/06/2010
(33) Name of priority country :U.S.A.
(86) International Application No :PCT/US2011/041304
Filing Date :21/06/2011
(87) International Publication No :WO/2011/163273
(61) Patent of Addition to Application Number :NA
Filing Date :NA
(62) Divisional to Application Number :NA
Filing Date :NA

(71)**Name of Applicant :**
1)QUALCOMM INCORPORATED
Address of Applicant :Attn: International IP Administration 5775 Morehouse Drive San Diego California 92121-1714 United States of America
(72)**Name of Inventor :**
1)BHATTAD Kapil
2)GAAL Peter
3)MONTOJO Juan

(57) Abstract :
Provided is a method for wireless communication which includes determining a data allocation size available for data to be transmitted determining a bundling size based at least in part on the data allocation size and precoding at least one reference signal in bundled contiguous resource blocks of the determined bundling size. The at least one reference signal in resource blocks in each bundle are precoded with a common precoding matrix.

No. of Pages : 30 No. of Claims : 38

(12) PATENT APPLICATION PUBLICATION
(19) INDIA
(22) Date of filing of Application :07/01/2013
(21) Application No.156/CHENP/2013 A
(43) Publication Date : 19/12/2014

(54) Title of the invention : METHODS AND APPARATUS FOR CONTACTLESS GESTURE RECOGNITION AND POWER REDUCTION

(51) International classification :G06F3/14,G06F3/042,G06F1/32
(31) Priority Document No :61/355923
(32) Priority Date :17/06/2010
(33) Name of priority country :U.S.A.
(86) International Application No :PCT/US2011/040975
Filing Date :17/06/2011
(87) International Publication No:WO 2011/160079
(61) Patent of Addition to Application Number :NA
Filing Date :NA
(62) Divisional to Application Number :NA
Filing Date :NA

(71)**Name of Applicant :**
1)QUALCOMM INCORPORATED
Address of Applicant :Attn: International IP Administration 5775 Morehouse Drive San Diego California 92121 1714 U.S.A.
(72)**Name of Inventor :**
1)CHEN An M.
2)CHENG Heng Tze
3)RAZDAN Ashu
4)BULLER Elliot B.

(57) Abstract :
Systems and methods are described for performing contactless gesture recognition for a computing device such as a mobile computing device. An example technique for managing a gesture based input mechanism for a computing device described herein includes identifying parameters of the computing device relating to accuracy of gesture classification performed by the gesture based input mechanism and managing a power consumption level of at least an infrared (IR) light emitting diode (LED) or an IR proximity sensor of the gesture based input mechanism based on the parameters of the computing device.

No. of Pages : 46 No. of Claims : 30

(12) PATENT APPLICATION PUBLICATION
(19) INDIA
(22) Date of filing of Application :31/07/2012
(21) Application No.6735/CHENP/2012 A
(43) Publication Date : 19/12/2014

(54) Title of the invention : DISPLAY METHODS AND APPARATUS

(51) International classification :G02B26/02
(31) Priority Document No :60/655,827
(32) Priority Date :23/02/2005
(33) Name of priority country :U.S.A.
(86) International Application No :PCT/US2006/06448
Filing Date :23/02/2006
(87) International Publication No :lds;WO/2006/091738
(61) Patent of Addition to Application Number :NA
Filing Date :NA
(62) Divisional to Application Number :4221/CHENP/2007
Filed on :23/02/2006

(71)**Name of Applicant :**
1)PIXTRONIX, INC.
Address of Applicant :100 BURTT ROAD, SUITE 123, ANDOVER, MASSACHUSETTS 01810 U.S.A.
(72)**Name of Inventor :**
1)HAGOOD, NESBITT, W.
2)MCALLISTER, ABRAHAM
3)LEWIS, STEPHEN
4)BARTON, ROGER

(57) Abstract :
The present invention relates to an electromechanical device and a method of forming an image. An electromechanical device comprising at least one light source of a first color; an array of light blocking elements formed on a substrate; and a controller for receiving a frame of image data and for deriving at least one sub-frame image therefrom, and for controlling movement of the light blocking elements and coordinating application of electrical signals to the at least one light source to generate light to pass toward the array of light blocking elements, and for displaying a first sub-frame image corresponding to a first duration of the image frame and of the first color, and displaying a second sub-frame image corresponding to a second duration of the image frame and of the first color, wherein the first duration is different than the second duration.

No. of Pages : 142 No. of Claims : 17

(12) PATENT APPLICATION PUBLICATION
(19) INDIA
(22) Date of filing of Application :22/10/2012
(21) Application No.9061/CHENP/2012 A
(43) Publication Date : 19/12/2014

(54) Title of the invention : GAS ANALYTE SPECTRUM SHARPENING AND SEPARATION WITH MULTI-DIMENSIONAL MICRO-GC FOR GAS CHROMATOGRAPHY ANALYSIS

(51) International classification	:G01N30/02,B01D15/08,G01N30/16
(31) Priority Document No	:61/327,392
(32) Priority Date	:23/04/2010
(33) Name of priority country	:U.S.A.
(86) International Application No	:PCT/US2011/033325
Filing Date	:20/04/2011
(87) International Publication No	:WO/2011/133721
(61) Patent of Addition to Application Number	:NA
Filing Date	:NA
(62) Divisional to Application Number	:NA
Filing Date	:NA

(71)**Name of Applicant :**
1)TRICORNTECH CORPORATION
Address of Applicant :San Jose Biocenter 5941 Optical Court San Jose California 95138 UNITED STATES OF AMERICA
(72)**Name of Inventor :**
1)CHOU Tsung-Kuan A.
2)CHU Shih-Chi
3)CHENG Chia-Sheng
4)WANG Li-Peng
5)HUANG Chien-Lin

(57) Abstract :
The disclosure describes embodiments of an apparatus including a first gas chromatograph including a fluid inlet a fluid outlet and a first temperature control. A controller is coupled to the first temperature control and includes logic to apply a first temperature profile to the first temperature control to heat cool or both heat and cool the first gas chromatograph. Other embodiments are disclosed and claimed.

No. of Pages : 63 No. of Claims : 44

(12) PATENT APPLICATION PUBLICATION
(19) INDIA
(22) Date of filing of Application :09/04/2012
(21) Application No.3185/CHENP/2012 A
(43) Publication Date : 19/12/2014

(54) Title of the invention : ADIABATIC PLUG FLOW REACTORS AND PROCESSES INCORPORATNG THE SAME

(51) International classification :B01J19/00,B01J19/24,C07C17/269
(31) Priority Document No :61/250,023
(32) Priority Date :09/10/2009
(33) Name of priority country :U.S.A.
(86) International Application No :PCT/US2010/052090
Filing Date :08/10/2010
(87) International Publication No :WO 2011/044522 A2
(61) Patent of Addition to Application Number :NA
Filing Date :NA
(62) Divisional to Application Number :NA
Filing Date :NA

(71)**Name of Applicant :**
1)DOW GLOBAL TECHNOLOGIES LLC
Address of Applicant :2040 DOW CENTER, MIDLAND, MICHIGAN 48674 U.S.A.
(72)**Name of Inventor :**
1)TIRTOWIDJOJO, MAX MARKUS
2)BAI, HUA
3)CHAKRABORTY, DEBASHIS
4)EIFFLER, JUERGEN
5)GROENEWALD, HEINZ
6)HIRSEKORN, KURT FREDERICK
7)KOKOTT, MANFRED
8)KRUPER, WILLIAM, J.
9)LUEBBE, THOMAS, ULRICH
10)PARSONS, THOMAS, JOHN
11)PATEL, AVANI, MAULIK
12)WOBSER, MARCUS

(57) Abstract :
The present invention provides adiabatic plug flow reactors suitable for the production of chlorinated and/or fluorinated propene and higher alkenes from the reaction of chlorinated and/or fluorinated alkanes and chlorinated and/or fluorinated alkenes. The reactors comprise one or more designs that minimize the production of by-products at a desired conversion.

No. of Pages : 32 No. of Claims : 10

(12) PATENT APPLICATION PUBLICATION
(19) INDIA
(22) Date of filing of Application :22/01/2014
(21) Application No.540/CHENP/2014 A
(43) Publication Date : 19/12/2014

(54) Title of the invention : SELECTIVELY PERFORMING A POSITIONING PROCEDURE AT AN ACCESS TERMINAL BASED ON A BEHAVIOR MODEL

(51) International classification :H04W
(31) Priority Document No :61/512352
(32) Priority Date :27/07/2011
(33) Name of priority country :U.S.A.
(86) International Application No :PCT/US2012/048698
Filing Date :27/07/2012
(87) International Publication No :WO 2013/016692
(61) Patent of Addition to Application Number :NA
Filing Date :NA
(62) Divisional to Application Number :NA
Filing Date :NA

(71)**Name of Applicant :**
1)QUALCOMM INCORPORATED
Address of Applicant :International IP Administration 5775 Morehouse Drive San Diego CA 92121 1714 U.S.A.
(72)**Name of Inventor :**
1)BILANGE Eric P.
2)PERRY PELLETIER Adam W.
3)ZWICKILTON Christopher A.
4)DAMM Gary G.
5)RUOTSI Wendell
6)HEIDT Ian R.
7)KUHN Lukas D.

(57) Abstract :
In an embodiment an access terminal (AT) (200; 900) measures (415) location information when positioned at a user defined place associated with a geofence to a server (170; 900) and the server updates (425) a place fingerprint configured to identify the user defined place based on the reported location information. In another embodiment the AT or the server obtains (505A; 505E) location information associated with a set of user defined places that are identifiable by a set of place fingerprints determines (510A; 525A; 500B 505B 510B; 505C 510C 515C 520C 525C 530C; 505E; 515E) whether a location event has occurred and updates (510A; 525A; 505E; 515E) a behavior model based on the determination. In another embodiment the AT receives (700) a request for its location and evaluates (705 715; 705 715 720 725; 8I0A 815A) a set of factors to determine whether to acquire the AT s location with a high power consumption positioning procedure.

No. of Pages : 59 No. of Claims : 14

(12) PATENT APPLICATION PUBLICATION
(19) INDIA
(22) Date of filing of Application :28/08/2012
(21) Application No.7438/CHENP/2012 A
(43) Publication Date : 19/12/2014

(54) Title of the invention : ASSAY CARD FOR SAMPLE ACQUISITION TREATMENT AND REACTION

(51) International classification :G01N35/00,G01N33/48,G01N35/08
(31) Priority Document No :61/304,018
(32) Priority Date :12/02/2010
(33) Name of priority country :U.S.A.
(86) International Application No :PCT/US2011/024786
Filing Date :14/02/2011
(87) International Publication No :WO/2011/100708
(61) Patent of Addition to Application Number :NA
Filing Date :NA
(62) Divisional to Application Number :NA
Filing Date :NA

(71)**Name of Applicant :**
1)NORTHWESTERN UNIVERSITY
Address of Applicant :633 Clark Street Evanston IL 60208 United States of America
(72)**Name of Inventor :**
1)AGARWAL Abhishek K.
2)JANGAM Sujit Rao
3)SUR Kunal
4)KELSO David M.

(57) Abstract :
The present disclosure relates to devices and systems and methods for their use for defecting an analyte. In particular the present disclosure provides a disposable assay card in which reaction reagents are stored within the card to facilitate point-of-care application.

No. of Pages : 65 No. of Claims : 32

(12) PATENT APPLICATION PUBLICATION
(19) INDIA
(22) Date of filing of Application :05/10/2012
(21) Application No.8531/CHENP/2012 A
(43) Publication Date : 19/12/2014

(54) Title of the invention : DELAYED AUTOMATIC REPEAT REQUEST (ARQ) ACKNOWLEDGMENT

(51) International classification :H04L1/18
(31) Priority Document No :61/321,496
(32) Priority Date :06/04/2010
(33) Name of priority country :U.S.A.
(86) International Application No :PCT/US2011/031461
Filing Date :06/04/2011
(87) International Publication No :WO/2011/127203
(61) Patent of Addition to Application Number :NA
Filing Date :NA
(62) Divisional to Application Number :NA
Filing Date :NA

(71)**Name of Applicant :**
1)QUALCOMM INCORPORATED
Address of Applicant :Attn:International IP Administration 5775 Morehouse Drive San Diego California 92121-1714 U.S.A.
(72)**Name of Inventor :**
1)VIKRAM GUPTA
2)RASHID AHMED AKBAR ATTAR
3)YU-CHEUN JOU
4)RAVINDRA MANOHAR PATWARDHAN

(57) Abstract :
Disclosed are examples in which the acknowledgement channel is used for retransmitting a frame received with error. A receiver is configured to transmit an acknowledgment for a frame when the frame is decoded following receipt of the last Pilot Control Group (PCG) of the same frame. The transmitter is configured to receive the acknowledgment of an earlier frame during a subsequent frame, and not to retransmit the earlier frame. The two frames may be adjacent. During connection setup negotiation, the system can determine the values of ack_mask1 defining allowed times for the receiver to acknowledge successful decoding of the subsequent frame, and ack_mask2 defining allowed times for the receiver to acknowledge successful decoding of the earlier frame. The two mask values provide non-overlapping allowed times, so the receiver can acknowledge within the subsequent frame (1) successful decoding of the earlier frame, and (2) successful decoding of the subsequent frame.

No. of Pages : 44 No. of Claims : 41

(12) PATENT APPLICATION PUBLICATION
(19) INDIA
(22) Date of filing of Application :23/10/2012
(21) Application No.9072/CHENP/2012 A
(43) Publication Date : 19/12/2014

(54) Title of the invention : ASYMMETRIC WRITE SCHEME FOR MAGNETIC BIT CELL ELEMENTS

(51) International classification :G11C11/16
(31) Priority Document No :12/755,978
(32) Priority Date :07/04/2010
(33) Name of priority country :U.S.A.
(86) International Application No :PCT/US2011/031203
Filing Date :05/04/2011
(87) International Publication No :WO/2011/127025
(61) Patent of Addition to Application Number :NA
Filing Date :NA
(62) Divisional to Application Number :NA
Filing Date :NA

(71)**Name of Applicant :**
1)QUALCOMM INCORPORATED
Address of Applicant :Attn: International IP Administration 5775 Morehouse Drive San Diego California 92121-1714 United States of America
(72)**Name of Inventor :**
1)ZHU Xiaochun
2)RAO Hari M.
3)KIM Jung Pill
4)KANG Seung H.

(57) Abstract :
Asymmetric switching is defined for magnetic bit cell elements. A magnetic bit cell for memory and other devices includes a transistor coupled to an MTJ structure. A bit line is coupled at one terminal of the bit cell to the MTJ structure. At another terminal of the bit cell a source line is coupled to the source/drain terminal of the transistor. The bit line is driven by a bit line driver that provides a first voltage. The source line is driven by a source line driver that provides a second voltage. The second voltage is larger than the first voltage. The switching characteristics of the bit cell and MTJ structure are improved and made more reliable by one or a combination of applying the higher second voltage to the source line and/or reducing the overall parasitic resistance in the magnetic bit cell element.

No. of Pages : 44 No. of Claims : 25

(12) PATENT APPLICATION PUBLICATION
(19) INDIA
(22) Date of filing of Application :06/07/2012
(21) Application No.5974/CHENP/2012 A
(43) Publication Date : 19/12/2014

(54) Title of the invention : AXIAL GAP TYPE BRUSHLESS MOTOR

(51) International classification :H02K3/18
(31) Priority Document No :2010-001495
(32) Priority Date :06/01/2010
(33) Name of priority country :Japan
(86) International Application No :PCT/JP2010/007075
Filing Date :06/12/2010
(87) International Publication No :WO 2011/083530 A1
(61) Patent of Addition to Application Number :NA
Filing Date :NA
(62) Divisional to Application Number :NA
Filing Date :NA

(71)**Name of Applicant :**
1)KABUSHIKI KAISHA KOBE SEIKO SHO (KOBE STEEL, LTD)
Address of Applicant :10-26, WAKINOHAMA-CHO, 2-CHOME, CHUO-KU, KOBE-SHI, HYOGO 651-8585 Japan
(72)**Name of Inventor :**
1)TAKAMATSU, HIROYUKI
2)INOUE, KOJI
3)INOUE, KENICHI
4)HASE, TAKASHI
5)OZAKI, OSAMU
6)ICHIHARA, CHIKARA
7)MARUYAMA, MASAKATSU
8)MAEDA, YASUSHI
9)MITANI, HIROYUKI

(57) Abstract :
Disclosed is a brushless motor(1A)which is an axial gap type brushless motor(1 wherein stators (3A, 4A) comprising a coil (41) and a rotor (2) comprising a permanent magnet (23) are arranged with a gap therebetween in the axial direction. The coil (41) is a band-like wire which is spirally wound such that the width direction of the band-like wire generally coincides with the direction of the magnetic flux that is generated by the permanent magnet (23) of the rotor (2). Consequently, the axial gap type brushless motor (1A) having the above-described structure can be further reduced in eddy current lossin comparison to conventional brushless motors.

No. of Pages : 86 No. of Claims : 16

(12) PATENT APPLICATION PUBLICATION
(19) INDIA
(22) Date of filing of Application :08/09/2011
(21) Application No.6446/CHENP/2011 A
(43) Publication Date : 19/12/2014

(54) Title of the invention : HISTAMINE H3 INVERSE AGONISTS AND ANTAGONISTS AND METHODS OF USE THEREOF

(51) International classification :C07D471/14
(31) Priority Document No :61/151,817
(32) Priority Date :11/02/2009
(33) Name of priority country :U.S.A.
(86) International Application No :PCT/US2010/000335
Filing Date :11/02/2010
(87) International Publication No :WO 2010/093425 A1
(61) Patent of Addition to Application Number :NA
Filing Date :NA
(62) Divisional to Application Number :NA
Filing Date :NA

(71)**Name of Applicant :**
1)SUNOVION PHARMACEUTICALS INC.
Address of Applicant :84 WATERFORD DRIVE, MARLBOROUGH, MA 01752 U.S.A.
(72)**Name of Inventor :**
1)CHYTIL, MILAN
2)ENGEL, SHARON, R.
3)FANG, QUN, KEVIN
4)SPEAR, KERRY, L.

(57) Abstract :
Provided herein are fused imidazolyl compounds, methods of synthesis, and methods of use thereof. The compounds provided herein are useful for the treatment, prevention, and/or management of various disorders, such as neurological disorders and metabolic disorders. Compounds provided herein inhibit the activity of histamine H3 receptors and modulate the release of various neurotransmitters, such as histamine, acetylcholine, norepinephrine, and dopamine (e.g. at the synapse). Pharmaceutical formulations containing the compounds and their methods of use are also provided herein.

No. of Pages : 229 No. of Claims : 38

(12) PATENT APPLICATION PUBLICATION
(19) INDIA
(22) Date of filing of Application :09/10/2012
(21) Application No.8641/CHENP/2012 A
(43) Publication Date : 19/12/2014

(54) Title of the invention : SPLIT SEAL ASSEMBLY AND METHOD

(51) International classification :F16J15/02
(31) Priority Document No :61/313,975
(32) Priority Date :15/03/2010
(33) Name of priority country :U.S.A.
(86) International Application No :PCT/US2011/028362
Filing Date :14/03/2011
(87) International Publication No : NA
(61) Patent of Addition to Application Number :NA
Filing Date :NA
(62) Divisional to Application Number :NA
Filing Date :NA

(71)**Name of Applicant :**
1)JOHN CRANE INC.
Address of Applicant :6400 West Oakton Street Morton Grove Illinois 60053 U.S.A.
(72)**Name of Inventor :**
1)DUDEK David M.

(57) Abstract :
A split mechanical end face seal assembly has a split gland plate assembly a split mating seal ring assembly a split primary seal ring assembly and a split biasing assembly. The segmented mating seal ring is axially and radially supported on the segmented mating ring adapter by resilient connector strips as pre-assembled sub assemblies and the resilient connector strips axially non-rigidly support the mating seal ring with said mating ring adapter assembly. An axially movable primary sealing ring assembly includes a segmented primary seal ring. The biasing assembly is pre-assembled into the gland plate assembly and urges the primary seal ring into sealing relation with the mating seal seal ring.

No. of Pages : 36 No. of Claims : 23

(12) PATENT APPLICATION PUBLICATION
(19) INDIA
(22) Date of filing of Application :29/10/2012
(21) Application No.9194/CHENP/2012 A
(43) Publication Date : 19/12/2014

(54) Title of the invention : METHOD AND APPARATUS FOR PERFORMING INTERPOLATION BASED ON TRANSFORM AND INVERSE TRANSFORM

(51) International classification :H04N7/32
(31) Priority Document No :61/320,847
(32) Priority Date :05/04/2010
(33) Name of priority country :U.S.A.
(86) International Application No :PCT/KR2011/002388
Filing Date :05/04/2011
(87) International Publication No :WO/2011/126287
(61) Patent of Addition to Application Number :NA
Filing Date :NA
(62) Divisional to Application Number :NA
Filing Date :NA

(71)**Name of Applicant :**
1)SAMSUNG ELECTRONICS CO. LTD.
Address of Applicant :129 Samsung-ro Yeongtong-gu Suwon-si Gyeonggi-do 443-742 Republic of Korea.
(72)**Name of Inventor :**
1)ALSHINA Elena
2)ALSHIN Alexander
3)SHLYAKHOV Nikolay
4)CHOI Byeong-Doo
5)HONG Yoon-Mi
6)HAN Woo-Jin
7)LEE Tammy

(57) Abstract :
Provided are a method and apparatus for interpolating an image. The method includes: selecting a first filter from among a plurality of different filters for interpolating between pixel values of integer pixel units according to an interpolation location; and generating at least one pixel value of at least one fractional pixel unit by interpolating between the pixel values of the integer pixel units by using the selected first filter.

No. of Pages : 66 No. of Claims : 11

(12) PATENT APPLICATION PUBLICATION
(19) INDIA
(22) Date of filing of Application :29/10/2012
(21) Application No.9195/CHENP/2012 A
(43) Publication Date : 19/12/2014

(54) Title of the invention : COOLING DEVICE AND AIR CONDITIONER PROVIDED THEREWITH

(51) International classification :F24F11/02,B60H1/32,F24F13/20
(31) Priority Document No :NA
(32) Priority Date :NA
(33) Name of priority country :NA
(86) International Application No :PCT/JP2010/007310
Filing Date :16/12/2010
(87) International Publication No :WO 2012/081055 A1
(61) Patent of Addition to Application Number :NA
Filing Date :NA
(62) Divisional to Application Number :NA
Filing Date :NA

(71)**Name of Applicant :**
1)PANASONIC CORPORATION
Address of Applicant :1006 Oaza Kadoma Kadoma shi Osaka 5718501 Japan
(72)**Name of Inventor :**
1)OKA Kouji
2)TAKEDA Yuji
3)TOSHA Teruo
4)ISHISONE Tsukasa

(57) Abstract :
Disclosed is a cooling device which cools a control component (30) housed in a control box (32) of an air conditioner (10) having a compressor (12) an outdoor heat exchanger (14) a decompressor (16) an indoor heat exchanger (18) and tubes (20 26) which connect these and which circulate a refrigerant. The disclosed cooling device has a cooling unit (34) which is arranged in a state separated from the control component (30) and either in a position in the control box (32) below said control component (30) or in a position in the control box (32) in the horizontal direction from said control component (30) and cools the air in the control box (32) by means of heat exchange with the refrigerant.

No. of Pages : 21 No. of Claims : 8

(12) PATENT APPLICATION PUBLICATION
(19) INDIA
(22) Date of filing of Application :29/08/2012
(21) Application No.7453/CHENP/2012 A
(43) Publication Date : 19/12/2014

(54) Title of the invention : SYSTEM-IN-PACKAGE USING EMBEDDED-DIE CORELESS SUBSTRATES AND PROCESSES OF FORMING SAME

(51) International classification :H01L23/48,H01L21/60,H01L23/14
(31) Priority Document No :12/725,925
(32) Priority Date :17/03/2010
(33) Name of priority country :U.S.A.
(86) International Application No :PCT/US2011/028689
Filing Date :16/03/2011
(87) International Publication No :WO/2011/116106
(61) Patent of Addition to Application Number :NA
Filing Date :NA
(62) Divisional to Application Number :NA
Filing Date :NA

(71)**Name of Applicant :**
1)INTEL CORPORATION
Address of Applicant :2200 MISSION COLLEGE BLVD. SANTA CLARA CA 95052 UNITED STATES OF AMERICA
(72)**Name of Inventor :**
1)GUZEK John S.
2)NAIR Vijay

(57) Abstract :
An apparatus includes a coreless substrate with an embedded die that is integral to the coreless substrate and at least one device assembled on a surface that is opposite to a ball-grid array disposed on the coreless substrate. The apparatus may include an over-mold layer to protect the at least one device assembled on the surface.

No. of Pages : 29 No. of Claims : 20

(12) PATENT APPLICATION PUBLICATION
(19) INDIA
(22) Date of filing of Application :29/08/2012
(21) Application No.7454/CHENP/2012 A
(43) Publication Date : 19/12/2014

(54) Title of the invention : A SIMPLE CAPSULE-BASED INHALER

(51) International classification :A61M15/00
(31) Priority Document No :PT105065
(32) Priority Date :26/04/2010
(33) Name of priority country :Portugal
(86) International Application No :PCT/GB2011/050760
Filing Date :18/04/2011
(87) International Publication No :WO/2011/135327
(61) Patent of Addition to Application Number :NA
Filing Date :NA
(62) Divisional to Application Number :NA
Filing Date :NA

(71)**Name of Applicant :**
1)HOVIONE INTERNATIONAL LTD.
Address of Applicant :Aubin House 11th Floor 171-172 Gloucester Road Wanchai Hong Kong China
(72)**Name of Inventor :**
1)VILLAX Peter
2)MENDES Pedro
3)McDERMENT Iain

(57) Abstract :
A dry powder inhaler for pulmonary or nasal use employing capsules (323) containing a dose of powder for inhalation comprising two operating components and an optional cover. Air is drawn by the patient via a mouthpiece or nosepiece (303) which is in communication with the capsule (323) and travels via air paths through the device and through the capsule (323) thereby dispersing and entraining the dose of powder. The capsule (323) is cut by cutting means (350 351) located on one of the components (300) in a manner which eliminates or minimizes capsule debris and minimizes powder leakage during use. The inhaler body (300) and capsule cutting blades (350 351) comprise a single operating component and they may be manufactured in a single unitary step. The invention affords a very economical and simple device for the delivery of pulmonary medicines.

No. of Pages : 34 No. of Claims : 15

(12) PATENT APPLICATION PUBLICATION
(19) INDIA
(22) Date of filing of Application :05/10/2012
(21) Application No.8528/CHENP/2012 A
(43) Publication Date : 19/12/2014

(54) Title of the invention : COMBINING DATA FROM MULTIPLE IMAGE SENSORS

(51) International classification :H04N5/232,H04N13/00
(31) Priority Document No :61/320,940
(32) Priority Date :05/04/2010
(33) Name of priority country :U.S.A.
(86) International Application No :PCT/US2011/031288
Filing Date :05/04/2011
(87) International Publication No :WO/2011/127080
(61) Patent of Addition to Application Number :NA
Filing Date :NA
(62) Divisional to Application Number :NA
Filing Date :NA

(71)**Name of Applicant :**
1)QUALCOMM INCORPORATED
Address of Applicant :Attn: International IP Administration 5775 Morehouse Drive San Diego California 92121-1714 United States of America
(72)**Name of Inventor :**
1)GOMA Sergiu R.
2)ALEKSIC Milivoje
3)HWANG Hau
4)CHEUNG Joseph

(57) Abstract :
A method of combining data from multiple sensors is disclosed. The method includes receiving lines of image data at an image processor having an input for a single camera. Each line of the image data includes first line data from a first image captured by a first camera and second line data from a second image captured by a second camera. The method also includes generating an output frame having a first section corresponding to line data of the first image and having a second section corresponding to line data of the second image. The first section and the second section are configured to be used to generate a three-dimensional (3D) image format or a 3D video format.

No. of Pages : 96 No. of Claims : 22

(12) PATENT APPLICATION PUBLICATION
(19) INDIA
(22) Date of filing of Application :09/11/2013
(21) Application No.9000/CHENP/2013 A
(43) Publication Date : 19/12/2014

(54) Title of the invention : MOBILE COMMUNICATOR DEVICE INCLUDING USER ATTENTIVENESS DETECTOR

(51) International classification :G08B23/00
(31) Priority Document No :13/084732
(32) Priority Date :12/04/2011
(33) Name of priority country :U.S.A.
(86) International Application No :PCT/US2012/033181
Filing Date :12/04/2012
(87) International Publication No :WO 2012/142200
(61) Patent of Addition to Application Number :NA
Filing Date :NA
(62) Divisional to Application Number :NA
Filing Date :NA

(71)**Name of Applicant :**
1)MOBILE COMMUNICATION TECHNOLOGIES LLC
Address of Applicant :4305 Yoakum Boulevard Houston TX 77006 U.S.A.
(72)**Name of Inventor :**
1)EWELL Jr. Robert C.
2)GARMANY Douglas L.
3)KELLY Charles T.

(57) Abstract :
Disclosed herein is a mobile communicator that includes a speed detection system for determining whether the mobile communicator is moving faster than a threshold speed. The mobile communicator further includes a user attentiveness detector configured determine whether a user is inattentive. The mobile communicator includes a circuit configured to ensure that a functionality of the mobile communicator is in a turned off state when the speed detection system determines that the mobile communicator is moving faster than the threshold speed and the user attentiveness detector determines that the user is inattentive.

No. of Pages : 37 No. of Claims : 49

(12) PATENT APPLICATION PUBLICATION
(19) INDIA
(22) Date of filing of Application :29/10/2012
(21) Application No.9210/CHENP/2012 A
(43) Publication Date : 19/12/2014

(54) Title of the invention : SYSTEM APPARATUS AND METHOD FOR COORDINATING PEER COMMUNICATION IN WIRELESS SYSTEMS

(51) International classification :H04W76/02
(31) Priority Document No :61/330,246
(32) Priority Date :30/04/2010
(33) Name of priority country :U.S.A.
(86) International Application No :PCT/US2011/034566
Filing Date :29/04/2011
(87) International Publication No :WO/2011/137347
(61) Patent of Addition to Application Number :NA
Filing Date :NA
(62) Divisional to Application Number :NA
Filing Date :NA

(71)**Name of Applicant :**
1)QUALCOMM INCORPORATED
Address of Applicant :Attn: International IP Administration 5775 Morehouse Drive San Diego California 92121-1714 United States of America
(72)**Name of Inventor :**
1)ULIPINAR Fatih

(57) Abstract :
In accordance with aspects of the disclosure a method apparatus and computer program product are provided for wireless communication. The method apparatus and computer program product may be configured to provide a first peer connection with a first node provide a second peer connection with a second node and coordinate communication between the first and second nodes via the first and second peer connections.

No. of Pages : 54 No. of Claims : 40

(12) PATENT APPLICATION PUBLICATION
(19) INDIA
(22) Date of filing of Application :24/08/2012
(21) Application No.7342/CHENP/2012 A
(43) Publication Date : 19/12/2014

(54) Title of the invention : PATIENT INTERFACE DEVICE WITH DYNAMIC MASK ADJUSTMENT

(51) International classification :A61M16/06
(31) Priority Document No :61/313141
(32) Priority Date :12/03/2010
(33) Name of priority country :U.S.A.
(86) International Application No :PCT/IB2011/050781
Filing Date :24/02/2011
(87) International Publication No :WO/2011/110968
(61) Patent of Addition to Application Number :NA
Filing Date :NA
(62) Divisional to Application Number :NA
Filing Date :NA

(71)**Name of Applicant :**
1)KONINKLIJKE PHILIPS ELECTRONICS N.V.
Address of Applicant :GROENEWOUDSEWEG 1 EINDHOVEN 5621 BA NETHERLANDS
(72)**Name of Inventor :**
1)HAIBACH Richard T.

(57) Abstract :
A patient interface device (10 10 62 62 102 152 162 172) is provided that includes a patient sealing assembly (12 64 104) such as a mask having a rigid shell and a cushion coupled to the rigid shell a forehead support (26 72 118) coupled to the patient sealing assembly and a hinge assembly (40 40 84 84 124 154 164 174) provided between a top portion of the patient sealing assembly and the forehead support.

No. of Pages : 32 No. of Claims : 16

(12) PATENT APPLICATION PUBLICATION
(19) INDIA
(22) Date of filing of Application :11/10/2012

(21) Application No.8731/CHENP/2012 A
(43) Publication Date : 19/12/2014

(54) Title of the invention : ENHANCING WIDE AREA CONTROL RELIABILITY OF A POWER TRANSMISSION SYSTEM

(51) International classification	:H02J 3/24,H02J13/00
(31) Priority Document No	:NA
(32) Priority Date	:NA
(33) Name of priority country	:NA
(86) International Application No	:PCT/EP2010/053458
Filing Date	:17/03/2010
(87) International Publication No	: NA
(61) Patent of Addition to Application Number	:NA
Filing Date	:NA
(62) Divisional to Application Number	:NA
Filing Date	:NA

(71)**Name of Applicant :**
1)ABB Research Ltd.
Address of Applicant :Affolternstrasse 44 CH-8050 Z¼rich Switzerland
(72)**Name of Inventor :**
1)MAJUMDER Rajat

(57) Abstract :
The invention is related to a method arrangement and computer program product for enhancing the reliability of wide are control in a power transmission system where the wide are control is performed in the power transmission system based on measurement of system data.

No. of Pages : 32 No. of Claims : 17

(12) PATENT APPLICATION PUBLICATION
(19) INDIA
(22) Date of filing of Application :11/10/2012
(21) Application No.8732/CHENP/2012 A
(43) Publication Date : 19/12/2014

(54) Title of the invention : NOVEL COMPOUNDS FOR THE TREATMENT OF DISEASES ASSOCIATED WITH AMYLOID OR AMYLOID-LIKE PROTEINS

(51) International classification :C07D209/14,A61K31/437,A61P25/28
(31) Priority Document No :10160223.3
(32) Priority Date :16/04/2010
(33) Name of priority country :EPO
(86) International Application No :PCT/EP2011/056068
Filing Date :15/04/2011
(87) International Publication No :WO/2011/128455
(61) Patent of Addition to Application Number :NA
Filing Date :NA
(62) Divisional to Application Number :NA
Filing Date :NA

(71)**Name of Applicant :**
1)AC IMMUNE SA
Address of Applicant :EPFL-PSE Building B CH-1015 Lausanne Switzerland
(72)**Name of Inventor :**
1)KROTH Heiko
2)HAMEL Cotinica
3)BENDERITTER Pascal
4)FROESTL Wolfgang
5)SREENIVASACHARY Nampally
6)MUHS Andreas

(57) Abstract :
The present invention relates to novel compounds that can be employed in the treatment of a group of disorders and abnormalities associated with amyloid protein such as Alzherimer™s disease and of diseases or conditions associated with amyloid-like proteins. The compounds of the present invention can also be used in the treatment of ocular diseases associated with pathological abnormalities/changes in the tissues of the visual system. The present invention further relates to pharmaceutical compositions comprising these compounds and to the use of these compounds for the preparation of medicaments for treating or preventing diseases or conditions associated with amyloid and/or amyloid-like proteins is aslo disclosed.

No. of Pages : 458 No. of Claims : 86

(12) PATENT APPLICATION PUBLICATION
(19) INDIA
(22) Date of filing of Application :07/12/2011
(21) Application No.9108/CHENP/2011 A
(43) Publication Date : 19/12/2014

(54) Title of the invention : CONVEYOR DEVICE FOR FLAT CARDBOARD SHEETS IN CARDBOARD-BOX FORMING MACHINES

(51) International classification :B65B35/24
(31) Priority Document No :P201030029
(32) Priority Date :14/01/2010
(33) Name of priority country :Spain
(86) International Application No :PCT/ES2010/070875
Filing Date :30/12/2010
(87) International Publication No :WO 2011/086213 A1
(61) Patent of Addition to Application Number :NA
Filing Date :NA
(62) Divisional to Application Number :NA
Filing Date :NA

(71)**Name of Applicant :**
1)BOIX MAQUINARIA, S.L.
Address of Applicant :POLIGONO INDUSTRIAL LA GRANADINA,MANZANA, 1-CALLE 5, E-03349 SAN ISIDRO DE ALBATERA (ALICANTE) Spain
(72)**Name of Inventor :**
1)BOIX JEAN, JOSE

(57) Abstract :
This comprises N horizontal entruining londer(I) on which ore placed m ail initial zone several piled cardboard sheets (12) in he driven by several transversnl pushers (13) to A forming station (.14) for cardboard boxes (23), said transversal pushers (13) being connectcd to u lalcrul ehuiu (2) coupled to several end pinions (i) connected to several cross axles ('1-4'). ft is chnrctoriscc) in ihnt the hon/xmlul uitrnuuncul louder (1) cou be adjusted longitudinally, thereby varying the distance between I he uausvei'sal nxles (4-4), including tor this purpose a vertically moveable tractive mcchimism (8), that has n clutch mechanism (20) by Tiicaii£ of which the movement is rr.msmiuod io a large wiywhccl unit (17) and to aii cticodcr (16) arranged coaxifllly with said large cogwheel (17), without ever losing the link between the aforementioned encoder (IS) and die respective transversal pusher (13).

No. of Pages : 17 No. of Claims : 9

(12) PATENT APPLICATION PUBLICATION
(19) INDIA
(22) Date of filing of Application :01/11/2012
(21) Application No.9322/CHENP/2012 A
(43) Publication Date : 19/12/2014

(54) Title of the invention : INFRASTRUCTURE MOUNTED RFID TAGS

(51) International classification :G06K7/00,G06K19/077
(31) Priority Document No :12/772,252
(32) Priority Date :03/05/2010
(33) Name of priority country :U.S.A.
(86) International Application No :PCT/US2011/034737
Filing Date :02/05/2011
(87) International Publication No :WO/2011/139941
(61) Patent of Addition to Application Number :NA
Filing Date :NA
(62) Divisional to Application Number :NA
Filing Date :NA

(71)**Name of Applicant :**
1)AVERY DENNISON CORPORATION
Address of Applicant :150 N. Orange Grove Blvd. Pasadena CA 91103 U.S.A.
(72)**Name of Inventor :**
1)IAN J. FORSTER

(57) Abstract :
Infrastructure -mounted RFID - readable tags or transponders are provided for various applications. Such infrastructure tags (12) may be employed in combination with RFID - readable product tags (10) and an RFID reader (20) for an improved inventory-management system which requires both types of tags to be scanned to constitute a successful product count. Infrastructure tags may also be employed as read or no-read tags in an RFID read field. The infrastructure tags of the RFID read field are combined with an RFID reader which is dynamically adaptable during initial set-up and use to improve the performance of the read field. When a perturbing object is detected in the read field, one or more performance parameters of the reader are adjusted to overcome any perturbing influence caused by the object.

No. of Pages : 25 No. of Claims : 26

(12) PATENT APPLICATION PUBLICATION
(19) INDIA
(22) Date of filing of Application :14/08/2012
(21) Application No.7122/CHENP/2012 A
(43) Publication Date : 19/12/2014

(54) Title of the invention : TEMPERATURE CONTROL APPARATUS AND METHOD FOR THERMOREGULATION OF A HUMAN BODY

(51) International classification :A61F7/10,F24F5/00
(31) Priority Document No :10155859.1
(32) Priority Date :09/03/2010
(33) Name of priority country :EPO
(86) International Application No :PCT/IB2011/050878
Filing Date :02/03/2011
(87) International Publication No :WO/2011/110975
(61) Patent of Addition to Application Number :NA
Filing Date :NA
(62) Divisional to Application Number :NA
Filing Date :NA

(71)**Name of Applicant :**
1)KONINKLIJKE PHILIPS ELECTRONICS N.V.
Address of Applicant :GROENEWOUDSEWEG 1 EINDHOVEN 5621 BA NETHERLANDS
(72)**Name of Inventor :**
1)CHESTAKOV Dmitri

(57) Abstract :
The present invention relates to a temperature control apparatus for thermoregulation of a human body comprising at least one radiation absorption panel with at least one surface capable of absorbing thermal radiation and a cooling device provided to cool said panel. A sleeping accommodation for a human being comprises a lying area and such a temperature control apparatus wherein the radiation absorption panel is disposed adjacent to the lying are or above the lying area. The invention further relates to a corresponding method for thermoregulation of the human body.

No. of Pages : 17 No. of Claims : 14

(12) PATENT APPLICATION PUBLICATION
(19) INDIA
(22) Date of filing of Application :22/10/2013
(21) Application No.8485/CHENP/2013 A
(43) Publication Date : 19/12/2014

(54) Title of the invention : INVERTER DEVICE

(51) International classification :H02M7/48
(31) Priority Document No :NA
(32) Priority Date :NA
(33) Name of priority country :NA
(86) International Application No :PCT/JP2012/082539
Filing Date :14/12/2012
(87) International Publication No :WO/2014/091625
(61) Patent of Addition to Application Number :NA
Filing Date :NA
(62) Divisional to Application Number :NA
Filing Date :NA

(71)**Name of Applicant :**
1)MITSUBISHI ELECTRIC CORPORATION
Address of Applicant :7-3, MARUNOUCHI 2-CHOME, CHIYODA-KU, TOKYO 100-8310 Japan
(72)**Name of Inventor :**
1)ICHIHARA, MASAFUMI

(57) Abstract :
An inverter device for receiving direct-current power from a direct-current common bus (15) and driving a load, wherein connections are configured so that: during power-running, a switching element (SW1) is disposed on a first current pathway flowing through a positive-side direct-current terminal (P); during regeneration, a reverse-connected diode (D1) is disposed on a second current pathway flowing through a positive-side direct-current terminal (P1); when the smoothing capacitor of a smoothing unit (13) is being initially charged, a charge resistor (R1) is disposed on a third current pathway flowing through the positive-side direct-current terminal (P); a brake resistor (R2) is externally connected between the positive-side direct-current terminals (P, P1); and the positive-side direct-current terminal (P) has the same potential as the positive-side bus (15a) of the direct-current common bus (15).

No. of Pages : 33 No. of Claims : 10

(12) PATENT APPLICATION PUBLICATION
(19) INDIA
(22) Date of filing of Application :06/11/2012
(21) Application No.9428/CHENP/2012 A
(43) Publication Date : 19/12/2014

(54) Title of the invention : SYSTEM AND METHOD FOR PROVIDING LIGHT THERAPY TO A SUBJECT USING TWO OR MORE WAVELENGTH BANDS OF ELECTROMAGNETIC RADIATION

(51) International classification :A61M21/02,A61N5/06,A61M21/00
(31) Priority Document No :61/334600
(32) Priority Date :14/05/2010
(33) Name of priority country:U.S.A.
(86) International Application No :PCT/IB2011/051788
Filing Date :25/04/2011
(87) International Publication No :WO/2011/141842
(61) Patent of Addition to Application Number :NA
Filing Date :NA
(62) Divisional to Application Number :NA
Filing Date :NA

(71)**Name of Applicant :**
1)KONINKLIJKE PHILIPS ELECTRONICS N.V.
Address of Applicant :GROENEWOUDSEWEG 1 EINDHOVEN 5621 BA NETHERLANDS
(72)**Name of Inventor :**
1)COLBAUGH Michael Edward

(57) Abstract :
Light therapy is provided to a subject through a sleep mask. The sleep mask is configured to deliver electromagnetic radiation to the closed eyelids of the subject within two separate wavelength bands. The first wavelength band is therapeutically impactful in adjusting the sleep cycle of the subject. The second wavelength band preconditions the subject for delivery of the electromagnetic radiation in the first wavelength band maintains the apparent brightness of the electromagnetic radiation throughout therapy enables cooling within the sleep mask enhances the power efficiency of the sleep mask and/or provides other benefits. The first wavelength band and the second wavelength band are selected based on attenuation of electromagnetic radiation by the eyelid of the subject.

No. of Pages : 28 No. of Claims : 15

(12) PATENT APPLICATION PUBLICATION
(19) INDIA
(22) Date of filing of Application :06/11/2012
(21) Application No.9430/CHENP/2012 A
(43) Publication Date : 19/12/2014

(54) Title of the invention : DENTAL LIGHT DEVICE WITH IDENTIFICATION MEANS

(51) International classification :A61C19/00
(31) Priority Document No :61/334131
(32) Priority Date :12/05/2010
(33) Name of priority country :U.S.A.
(86) International Application No :PCT/US2011/036286
Filing Date :12/05/2011
(87) International Publication No :WO/2011/143454
(61) Patent of Addition to Application Number :NA
Filing Date :NA
(62) Divisional to Application Number :NA
Filing Date :NA

(71)**Name of Applicant :**
1)DISCUS DENTAL LLC
Address of Applicant :Legal Department 8550 Higuera Street Culver City CA 90232 United States of America
(72)**Name of Inventor :**
1)GERSH Mark
2)ORLOFF Marc
3)MACDONALD Jeff

(57) Abstract :
This invention relates to a curing light device capable of curing dental composites with a means to blow air. The blown air is directed from the curing light onto the tooth that is exposed to the curing light. The blown air has the effect of cooling the surface of the tooth to maintain patient comfort and efficient curing of dental composites

No. of Pages : 32 No. of Claims : 14

(12) PATENT APPLICATION PUBLICATION
(19) INDIA
(22) Date of filing of Application :06/11/2012
(21) Application No.9431/CHENP/2012 A
(43) Publication Date : 19/12/2014

(54) Title of the invention : MAGNETIC RESONANCE EXAMINATION WITH INSTRUMENT DETECTION

(51) International classification :G01R33/28,G01R33/561
(31) Priority Document No :10164115.7
(32) Priority Date :27/05/2010
(33) Name of priority country :EPO
(86) International Application No :PCT/IB2011/052195
Filing Date :19/05/2011
(87) International Publication No :WO 2011/148300
(61) Patent of Addition to Application Number :NA
Filing Date :NA
(62) Divisional to Application Number :NA
Filing Date :NA

(71)**Name of Applicant :**
1)KONINKLIJKE PHILIPS ELECTRONICS N.V.
Address of Applicant :GROENEWOUDSEWEG 1 EINDHOVEN 5621 BA NETHERLANDS
(72)**Name of Inventor :**
1)VAN DEN BRINK Johan Samuel

(57) Abstract :
An magnetic resonance examination system for examination of an object comprises an RF system to generate an RF transmission field and gradient system to generate temporarymagnetic gradient fields. A controlmodule includes a sequence controller to controlthe RF system and the gradient system to produce acquisition sequences including RF pulses and magnetic gradient pulses to generate magnetic resonance signals. The sequence controller is configured to produce an detection scan including a steady state gradient echo acquisition sequence to generate steady state gradient echo signals and an RF spoiled echo acquisition sequence to produce RF spoiled echo signals. The control module further including an analysis unit to compare the gradient echo signals to the RF spoiled echo signals and for detection of an instrument in the object from the comparison of the gradient echoes and the RF spoiled echoes.

No. of Pages : 15 No. of Claims : 7

(12) PATENT APPLICATION PUBLICATION
(19) INDIA
(22) Date of filing of Application :31/10/2012
(21) Application No.9286/CHENP/2012 A
(43) Publication Date : 19/12/2014

(54) Title of the invention : SWITCHABLE SINGLE-MULTIVIEW MODE DISPLAY DEVICE

(51) International classification :H04N13/00,G02F1/1343
(31) Priority Document No :10163622.3
(32) Priority Date :21/05/2010
(33) Name of priority country :EPO
(86) International Application No :PCT/IB2011/052149
Filing Date :17/05/2011
(87) International Publication No :WO 2011/145045
(61) Patent of Addition to Application Number :NA
Filing Date :NA
(62) Divisional to Application Number :NA
Filing Date :NA

(71)**Name of Applicant :**
1)KONINKLIJKE PHILIPS ELECTRONICS N.V.
Address of Applicant :GROENEWOUDSEWEG 1 EINDHOVEN 5621 BA NETHERLANDS
(72)**Name of Inventor :**
1)KRIJN Marcellinus P. C. M.
2)DE BOER Dirk Kornelis Gerhardus

(57) Abstract :
A 2D-3D switchable autostereoscopic display device has an imaging arrangement (109) electrically switchable between a 2D mode and a 3D mode which comprises in-plane switching electrodes comprising coplanar parallel electrode lines. The electrode lines are arranged as a plurality of sets of parallel lines each set defining a lenticular lens area. Each set comprises first electrode lines at the opposite boundaries between the lens area and adjacent lens areas and at least a first pair of electrode lines disposed between the opposite boundaries and symmetrical about the centre of the lens area wherein each set comprises at most six electrode lines between the opposite boundaries. This provides an electrode layout which is simple to manufacture and yet has been found to provide good optical lens quality.

No. of Pages : 30 No. of Claims : 13

(12) PATENT APPLICATION PUBLICATION
(19) INDIA
(22) Date of filing of Application :12/12/2011
(21) Application No.9288/CHENP/2011 A
(43) Publication Date : 19/12/2014

(54) Title of the invention : NANOSTRUCTURAL COMPOSITION OF BIOCIDE

(51) International classification :A01N25/14
(31) Priority Document No :2009117737
(32) Priority Date :13/05/2009
(33) Name of priority country :Russia
(86) International Application No :PCT/EP2010/0566369
Filing Date :13/05/2010
(87) International Publication No :WO 2010/130823 A1
(61) Patent of Addition to Application Number :NA
Filing Date :NA
(62) Divisional to Application Number :NA
Filing Date :NA

(71)**Name of Applicant :**
1)CLOSED STOCK COMPANY INSTITUTE OF APPLIED NANOTECHNOLOGY
Address of Applicant :SAVELKINSKY TRAVEL 4, OFFIS 1314, ZELENOGRAD, MOSCOW-124482 Russia
2)FONDAZIONE SALVATORE MAUGERI CLINICA DEL LAVORO E DELLA RIABILITAZIONE
3)SIB LABORATORIES LIMITED
(72)**Name of Inventor :**
1)GRIGORIEV, ANATOLY IVANOVICH
2)ORLOV, OLEG IGOREVICH
3)MAUGERI, UMBERTO ORAZIO GIUSEPPE
4)BEKLEMYSHEV, VIACHESLAV IVANOVICH
5)ABRAMYAN, ARA ARSHAVIROVICH
6)SOLODOVNIKOV, VALDIMIR ALEKSANDROVICH

(57) Abstract :
This invention concerns biocides possessing fungicidal and bactericidal properties hich can be used in construction, medicine and other various areas of technics, nanostructural composition of biocide is realized from nanoparticles of bentonite owders intercalated by ions of Zn2+ and ions of Ag+ and/or ions of Cu2+. The iocides according to the invention are prepared starting from bentonite poweder hich is preliminarly enriched with cations of Na+, then treated with 10-20% olutions of inorganic salts of Zn (preferably zinc chloride or zinc sulfate ZnS04), id from bentonite powders preliminarly enriched with cations of Na+ and then eated with 10-20% solutions of inorganic salts of at least one ion selected in the roup consisting of Ag+ ions (preferably silver nitrate) and Cu2++ ions (preferably opper sulfate). The powders of bentonite, intercalated with the Zn2+, Ag+ and/or u2+ ions, are cleaned from acid anions and Na+ salts, and dispersed into anoparticles mainly of no more than 70nm. nanoparticles intercalated by ions nanoparticles-intercalated by ions of Zn2+:-nanoparticles intercalated by ions

No. of Pages : 26 No. of Claims : 16

(12) PATENT APPLICATION PUBLICATION
(19) INDIA
(22) Date of filing of Application :31/10/2012
(21) Application No.9288/CHENP/2012 A
(43) Publication Date : 19/12/2014

(54) Title of the invention : MULTI-VIEW DISPLAY DEVICE

(51) International classification :G02B27/22,H04N13/00,G02B27/00
(31) Priority Document No :10163600.9
(32) Priority Date :21/05/2010
(33) Name of priority country :EPO
(86) International Application No :PCT/IB2011/052107
Filing Date :13/05/2011
(87) International Publication No : NA
(61) Patent of Addition to Application Number :NA
Filing Date :NA
(62) Divisional to Application Number :NA
Filing Date :NA

(71)**Name of Applicant :**
1)KONINKLIJKE PHILIPS ELECTRONICS N.V.
Address of Applicant :GROENEWOUDSEWEG 1 EINDHOVEN 5621 BA NETHERLANDS
(72)**Name of Inventor :**
1)PIJLMAN Fetze
2)WILLEMSEN Oscar Hendrikus
3)DESMET Lieven Raf Roger
4)SLUIJTER Maarten
5)DE ZWART Siebe Tjerk
6)KRIJN Marcellinus Petrus Carolus Michael

(57) Abstract :
A multi-view display device comprises a pixellated display panel and a backlight comprising an arrangement of light sources(30) wherein each light source when turned on illuminates an associated region of pixels of the display panel. A display controller is adapted to control the pixellated display panel and the arrangement of light sources such that a partial display output is provided comprising simultaneously a set of at least three 2D views with no repetition of individual 2D views. This arrangement provides an output with controlled illumination direction of the pixels so that view repetitions are avoided. The output can be a single cone of views and the location from which the cone of views can be viewed depends on the relationship between the light sources of the backlight which are activated and the display panel.

No. of Pages : 46 No. of Claims : 15

(12) PATENT APPLICATION PUBLICATION
(19) INDIA
(22) Date of filing of Application :27/11/2013
(21) Application No.9499/CHENP/2013 A
(43) Publication Date : 19/12/2014

(54) Title of the invention : ALTERNATING CURRENT STEPPER MOTOR / ULTRA LOW SPEED MOTOR

(51) International classification :H02K37/00
(31) Priority Document No :LK/P/1/16448
(32) Priority Date :27/09/2011
(33) Name of priority country :Sri Lanka
(86) International Application No :PCT/IB2011/054656
Filing Date :19/10/2011
(87) International Publication No :WO 2013/045978
(61) Patent of Addition to Application Number :NA
Filing Date :NA
(62) Divisional to Application Number :NA
Filing Date :NA

(71)**Name of Applicant :**
1)GUNARATNE Pallege Mudiyanselage Nilantha Prasad Dhammika
Address of Applicant :13 A Pathima Road Makola South Makola Sri Lanka Colombo 11640 Sri Lanka
(72)**Name of Inventor :**
1)GUNARATNE Pallege Mudiyanselage Nilantha Prasad Dhammika

(57) Abstract :
· The speed of the AC motor directly depends on the supply frequency and low frequency motors are bulky and inefficient. · Ac motors always provides continues rotation and no discrete steps The vibration and the noise of the stepper motor is very high compare to other motors due to discrete steps and ringing at each step. Also have the limitations of accuracy power and torque. Ultra low speeds are very important in control systems usually are created using gear reduction motors. Achieving high accuracy high power with smooth operation for stepper motors and ultra low speed motors using conventional technology is expensive and highly complicated. Uses of the alternating current motors for stepper / ultra low speed motors are not possible with available technology mainly due to two reasons Stand still magnetic field created out of combination of rotating magnetic fields with ability to change the stand still position makes stepper/ultra low speed motor using alternating current possible. This also creates many advantages in design because the speed and the angular position of the motor is completely independent form the supply frequency. Two rotating magnetic fields of opposite directions are originated by swapping two phases on one supply and leaving other supply uninterrupted. When the amplitude frequency and the phase angle of both the supplies are identical it creates non rotating (stand still) resultant magnetic field with sinusoidal varying amplitude. The direction of the resultant field is on the axis of the pole which the identical power phase is given (the phase not swapped). When the phase difference is introduced to two supplies the the direction of the resultant magnetic field rotates by half of the phase shift angle in 2 pole machine.

No. of Pages : 19 No. of Claims : 5

(12) PATENT APPLICATION PUBLICATION
(19) INDIA
(22) Date of filing of Application :14/08/2012
(21) Application No.7126/CHENP/2012 A
(43) Publication Date : 19/12/2014

(54) Title of the invention : A VACUUM CLEANER

(51) International classification :A47L9/18
(31) Priority Document No :10155898.9
(32) Priority Date :09/03/2010
(33) Name of priority country :EPO
(86) International Application No :PCT/IB2011/050844
Filing Date :28/02/2011
(87) International Publication No :WO/2011/110971
(61) Patent of Addition to Application Number :NA
Filing Date :NA
(62) Divisional to Application Number :NA
Filing Date :NA

(71)**Name of Applicant :**
1)KONINKLIJKE PHILIPS ELECTRONICS N.V.
Address of Applicant :GROENEWOUDSEWEG 1 EINDHOVEN 5621 BA NETHERLANDS
(72)**Name of Inventor :**
1)VAN DER KOOI Johannes Tseard
2)VOORHORST Fokke Roelof
3)DE WIT Bastiaan Johannes

(57) Abstract :
A vacuum cleaner (1) comprises an inlet (13) an outlet a fan (14) for creating a flow of air through the vacuum cleaner (1) by drawing air to be cleaned through the inlet (13) into the vacuum cleaner (1) and by exhausting air through the outlet outwardly of the vacuum cleaner (1) and a separator (15 41). The separator (15 41) is rotatably arranged around an rotation axis (21) for creating during use a column of rotating air to separate at least a portion of the airborne particles (10) from the flow of air. The separator (15 41) includes a number of vanes (25 44) for the creation of the column of rotating air

No. of Pages : 20 No. of Claims : 9

(12) PATENT APPLICATION PUBLICATION
(19) INDIA
(22) Date of filing of Application :04/11/2011
(21) Application No.8105/CHENP/2011 A
(43) Publication Date : 19/12/2014

(54) Title of the invention : ISOXAZOLE PYRIDAZINE DERIVATIVES

(51) International classification :C07D413/12
(31) Priority Document No :09159412.7
(32) Priority Date :05/05/2009
(33) Name of priority country :EPO
(86) International Application No :PCT/EP2010/055669
Filing Date :28/04/2010
(87) International Publication No :WO 2010/127968 A1
(61) Patent of Addition to Application Number :NA
Filing Date :NA
(62) Divisional to Application Number :NA
Filing Date :NA

(71)**Name of Applicant :**
1)F. HOFFMANN-LA ROCHE AG
Address of Applicant :124 GRENZACHERSTRASSE, CH-4070 BASEL Switzerland
(72)**Name of Inventor :**
1)LUCAS, MATTHEW C.
2)THOMAS, ANDREW

(57) Abstract :
The present invention is concerned with isoxazole-pyridazine derivatives of formula I, having affinity and selectivity for GABA A a5 receptor, their manufacture, pharmaceutical compositions containing them and their use as therapeutically active substances. The active compounds of the present invention are useful as cognitive enhancer or for the therapeutic and/or prophylactic treatment of cognitive disorders like Alzheimers disease.

No. of Pages : 34 No. of Claims : 23

(12) PATENT APPLICATION PUBLICATION
(19) INDIA
(22) Date of filing of Application :03/10/2012
(21) Application No.8435/CHENP/2012 A
(43) Publication Date : 19/12/2014

(54) Title of the invention : INSULATED CONDUCTOR HEATERS WITH SEMICONDUCTOR LAYERS

(51) International classification :E21B43/24
(31) Priority Document No :61/322,664
(32) Priority Date :09/04/2010
(33) Name of priority country :U.S.A.
(86) International Application No :PCT/US2011/031570
Filing Date :07/04/2011
(87) International Publication No :WO 2011/127275
(61) Patent of Addition to Application Number :NA
Filing Date :NA
(62) Divisional to Application Number :NA
Filing Date :NA

(71)**Name of Applicant :**
1)SHELL INTERNATIONALE RESEARCH MAATSCHAPPIJ B.V.
Address of Applicant :Carel van Bylandtlaan 30 NL-2596 HR The Hague Netherlands
(72)**Name of Inventor :**
1)DE ST. REMEY Edward Everett
2)GIULIANI Valerio
3)HARRIS Christopher Kelvin

(57) Abstract :
A heater used to heat a subsurface formation includes an electrical conductor a semiconductor layer at least partially surrounding the electrical conductor an insulation layer at least partially surrounding the electrical conductor an electrically conductive sheath at least partially surrounding the insulation layer. The heater may be located in an opening in the subsurface formation.

No. of Pages : 40 No. of Claims : 22

(12) PATENT APPLICATION PUBLICATION
(19) INDIA
(22) Date of filing of Application :31/10/2012
(21) Application No.9290/CHENP/2012 A
(43) Publication Date : 19/12/2014

(54) Title of the invention : HIGH VOLUME RATE 3D ULTRASONIC DIAGNOSTIC IMAGING

(51) International classification :A61B8/00,G01S15/89,G10K11/34
(31) Priority Document No :61/348296
(32) Priority Date :26/05/2010
(33) Name of priority country :U.S.A.
(86) International Application No :PCT/IB2011/051783
Filing Date :25/04/2011
(87) International Publication No : NA
(61) Patent of Addition to Application Number :NA
Filing Date :NA
(62) Divisional to Application Number :NA
Filing Date :NA

(71)**Name of Applicant :**
1)KONINKLIJKE PHILIPS ELECTRONICS N.V.
Address of Applicant :GROENEWOUDSEWEG 1 EINDHOVEN 5621 BA NETHERLANDS
(72)**Name of Inventor :**
1)PRATER David
2)WATKINS Stephen
3)MARTIN William

(57) Abstract :
A 3D ultrasonic diagnostic imaging system produces 3D display images at a 3D frame rate of display which is equal to the acquisition rate of a 3D image dataset. The volumetric region being imaged is sparsely sub-sampled by separated scanning beams. Spatial locations between the beams are filled in with interpolated values or interleaved with acquired data values from other 3D scanning intervals depending upon the existence of motion in the image field. A plurality of different beam scanning patterns are used different ones of which have different spatial locations where beams are located and beams are omitted. In a preferred embodiment the determination of motion and the consequent decision to use interpolated or interleaved data for display is determined on a pixel-by pixel basis.

No. of Pages : 26 No. of Claims : 14

(12) PATENT APPLICATION PUBLICATION
(19) INDIA
(22) Date of filing of Application :27/11/2013
(21) Application No.9507/CHENP/2013 A
(43) Publication Date : 19/12/2014

(54) Title of the invention : P N SEPARATION METAL FILL FOR FLIP CHIP LEDS

(51) International classification :H01L33/62,H01L33/00,H01L33/48
(31) Priority Document No :61/489280
(32) Priority Date :24/05/2011
(33) Name of priority country :U.S.A.
(86) International Application No :PCT/IB2012/052062
Filing Date :25/04/2012
(87) International Publication No :WO 2012/160455
(61) Patent of Addition to Application Number :NA
Filing Date :NA
(62) Divisional to Application Number :NA
Filing Date :NA

(71)**Name of Applicant :**
1)KONINKLIJKE PHILIPS N.V.
Address of Applicant :High Tech Campus 5 NL 5656 AE Eindhoven Netherlands
(72)**Name of Inventor :**
1)LEI Jipu
2)WEI Yajun
3)NICKEL Alexander H.
4)SCHIAFFINO Stefano
5)STEIGERWALD Daniel Alexander

(57) Abstract :
A light emitting diode (LED) structure (10) has semiconductor layers including a p type layer an active layer and an n type layer. The p type layer has a bottom surface and the n type layer has a top surface through which light is emitted. Portions of the p type layer and active layer are etched away to expose the n type layer. The surface of the LED is patterned with a photoresist and copper is plated over the exposed surfaces to form p and n electrodes electrically contacting their respective semiconductor layers. There is a gap between the n and p electrodes. To provide mechanical support of the semiconductor layers between the gap a dielectric layer (34) is formed in the gap followed by filling the gap with a metal (42). The metal is patterned to form stud bumps (40 42 44) that substantially cover the bottom surface of the LED die but do not short the electrodes. The substantially uniform coverage supports the semiconductor layer during subsequent process steps.

No. of Pages : 20 No. of Claims : 19

(12) PATENT APPLICATION PUBLICATION
(19) INDIA
(22) Date of filing of Application :13/08/2012
(21) Application No.7066/CHENP/2012 A
(43) Publication Date : 19/12/2014

(54) Title of the invention : METHOD AND APPARATUS FOR ENCODING AND DECODING MOTION VECTOR

(51) International classification :H04N7/32
(31) Priority Document No :10-2010-0003554
(32) Priority Date :14/01/2010
(33) Name of priority country :Republic of Korea
(86) International Application No :PCT/KR2011/000301
Filing Date :14/01/2011
(87) International Publication No :WO/2011/087321
(61) Patent of Addition to Application Number :NA
Filing Date :NA
(62) Divisional to Application Number :NA
Filing Date :NA

(71)**Name of Applicant :**
1)SAMSUNG ELECTRONICS CO. LTD.
Address of Applicant :129 Samsung-ro Yeongtong-gu Suwon-si Gyeonggi-do 443-742 Republic of Korea.
(72)**Name of Inventor :**
1)LEE Tammy
2)HAN Woo-Jin

(57) Abstract :
Provided are methods and apparatuses for encoding and decoding a motion vector. The method of encoding a motion vector includes: selecting a mode from among a first mode in which information indicating a motion vector predictor of at least one motion vector predictor is encoded and a second mode in which information indicating generation of a motion vector predictor based on pixels included in a previously encoded area adjacent to a current block is encoded; determining a motion vector predictor of the current block according to the selected mode and encoding information about the motion vector predictor of the current block; and encoding a difference vector between a motion vector of the current block and the motion vector predictor of the current block.

No. of Pages : 51 No. of Claims : 15

(12) PATENT APPLICATION PUBLICATION
(19) INDIA
(22) Date of filing of Application :23/08/2012
(21) Application No.7315/CHENP/2012 A
(43) Publication Date : 19/12/2014

(54) Title of the invention : CIRCUITS FOR CONTROLLING DISPLAY APPARATUS

(51) International classification :G09G3/34
(31) Priority Document No :61/300,735
(32) Priority Date :02/02/2010
(33) Name of priority country :U.S.A.
(86) International Application No :PCT/US2011/023402
Filing Date :01/02/2011
(87) International Publication No :WO/2011/097258
(61) Patent of Addition to Application Number :NA
Filing Date :NA
(62) Divisional to Application Number :NA
Filing Date :NA

(71)**Name of Applicant :**
1)PIXTRONIX INC.
Address of Applicant :100 Burtt Road Suite 123 Andover MA 01810 United States of America
(72)**Name of Inventor :**
1)GANDHI Jignesh
2)STEYN Jasper Lodewyk
3)FIJOL John J.

(57) Abstract :
A method of operating a display including loading image data to pixels in multiple rows of pixels in an array of pixels during a data loading phase actuating the pixels in the multiple rows during an update phase and illuminating at least one lamp during an lamp illumination phase to illuminate the actuated pixels to form an image on the display in which the update phase overlaps with at least one of the loading and illumination phases partially in time.

No. of Pages : 76 No. of Claims : 17

(12) PATENT APPLICATION PUBLICATION
(19) INDIA
(22) Date of filing of Application :05/10/2012
(21) Application No.8547/CHENP/2012 A
(43) Publication Date : 19/12/2014

(54) Title of the invention : SEMI-PERSISTENT SCHEDULING GRANTS IN HETEROGENEOUS NETWORKS

(51) International classification :H04W72/04
(31) Priority Document No :61/326,193
(32) Priority Date :20/04/2010
(33) Name of priority country :U.S.A.
(86) International Application No :PCT/US2011/033310
Filing Date :20/04/2011
(87) International Publication No :WO/2011/133708
(61) Patent of Addition to Application Number :NA
Filing Date :NA
(62) Divisional to Application Number :NA
Filing Date :NA

(71)**Name of Applicant :**
1)QUALCOMM INCORPORATED
Address of Applicant :Attn: International IP Administration 5775 Morehouse Drive San Diego California 92121-1714 United States of America
(72)**Name of Inventor :**
1)BARBIERI Alan
2)XU Hao
3)VAJAPEYAM Madhavan Srinivasan
4)DAMNJANOVIC Aleksandar

(57) Abstract :
Time division multiplexing (TDM) partitioning is one of the inter-cell interference coordination (ICIC) mechanisms considered for a heterogeneous network (HetNet) ICIC in a co-channel deployment. For example in subframes that are pre-allocated to an evolved Node B (eNB) neighbor eNBs may not transmit hence interference experienced by served user equipments (UEs) may be reduced. Semi-persistent scheduling (SPS) grants may have various available periodicities which may not be compatible with TDM partitioning. Therefore a UE may miss an SPS opportunity that was scheduled for a subframe that was not usable by the UE. Hence using SPS grants with small periodicities in a heterogeneous network with TDM partitioning may require changes which may include adjusting the periodicities of the SPS grants rescheduling of uplink SPS messages based on resource partitioning information (RPI) and/or determining RPI based on current SPS grants.

No. of Pages : 56 No. of Claims : 82

(12) PATENT APPLICATION PUBLICATION
(19) INDIA
(22) Date of filing of Application :23/10/2012

(21) Application No.9083/CHENP/2012 A
(43) Publication Date : 19/12/2014

(54) Title of the invention : CGRP ANTIBODIES

(51) International classification :A61K39/395
(31) Priority Document No :61/353,323
(32) Priority Date :10/06/2010
(33) Name of priority country :U.S.A.
(86) International Application No :PCT/US2011/039381
Filing Date :07/06/2011
(87) International Publication No :WO/2011/156324
(61) Patent of Addition to Application Number :NA
Filing Date :NA
(62) Divisional to Application Number :NA
Filing Date :NA

(71)**Name of Applicant :**
1)ELI LILLY AND COMPANY
Address of Applicant :Lilly Corporate Center City of Indianapolis State of Indiana United States of America
(72)**Name of Inventor :**
1)Barrett ALLAN
2)Robert Jan BENSCHOP
3)Mark Geoffrey CHAMBERS
4)Ryan James DARLING

(57) Abstract :
The present invention provides human engineered calcitonin gene related peptide (CGRP) antibodies or antigen-binding fragment thereof. In addition the present invention provides the use of the human engineered calcitonin gene related peptide (CGRP) antibodies or antigen-binding fragment thereof for the treatment of osteoarthritis pain.

No. of Pages : 33 No. of Claims : 31

(12) PATENT APPLICATION PUBLICATION
(19) INDIA
(22) Date of filing of Application :08/11/2012
(21) Application No.9530/CHENP/2012 A
(43) Publication Date : 19/12/2014

(54) Title of the invention : CONTROLLING ACCESS OF A USER TO MEDIA CONTENT

(51) International classification :H04N7/16,G06F21/31
(31) Priority Document No :10163746.0
(32) Priority Date :25/05/2010
(33) Name of priority country :EPO
(86) International Application No :PCT/IB2011/052174
Filing Date :18/05/2011
(87) International Publication No :WO/2011/148296
(61) Patent of Addition to Application Number :NA
Filing Date :NA
(62) Divisional to Application Number :NA
Filing Date :NA

(71)**Name of Applicant :**
1)KONINKLIJKE PHILIPS ELECTRONICS N.V.
Address of Applicant :GROENEWOUDSEWEG 1 EINDHOVEN 5621 BA NETHERLANDS
(72)**Name of Inventor :**
1)JANSSEN Onno M.

(57) Abstract :
Media device (100) for controlling access of a user to media content the media device comprising an identification code output (102 103) arranged for providing an identification code to the user the identification code identifying the media device a control code generator (104) arranged for generating a control code in dependence on the identification code and an access right an access code input (106 107) arranged for receiving an access code from the user the access code having been generated in dependence on the identification code and the access right and an access controller (108) arranged for comparing the access code to the control code and when the access code matches the control code granting the user access to the media content in accordance with the access right.

No. of Pages : 26 No. of Claims : 15

(12) PATENT APPLICATION PUBLICATION
(19) INDIA
(22) Date of filing of Application :08/08/2012
(21) Application No.6927/CHENP/2012 A
(43) Publication Date : 19/12/2014

(54) Title of the invention : A HEAT EXCHANGE DEVICE AND A METHOD OF MANUFACTURING THE SAME

(51) International classification :F28F13/02,F23D14/02,F28F1/10
(31) Priority Document No :61/302,304
(32) Priority Date :08/02/2010
(33) Name of priority country :U.S.A.
(86) International Application No :PCT/US2011/024008
Filing Date :08/02/2011
(87) International Publication No :WO/2011/097610
(61) Patent of Addition to Application Number :NA
Filing Date :NA
(62) Divisional to Application Number :NA
Filing Date :NA

(71)**Name of Applicant :**
1)LUMMUS TECHNOLOGY INC.
Address of Applicant :1515 Broad Street Bloomfield NJ 07003-3096 U.S.A.
(72)**Name of Inventor :**
1)FRANK D. MCCARTHY
2)STEPHEN DE HAAN

(57) Abstract :
A method of manufacturing a heat exchange device having at least one heat exchange tube is disclosed. The method includes: determining a peak heat flux area of the at least one heat exchange tube; and disposing in the at least one heat exchange tube an flow enhancement device for creating a desirable flow pattern in a process fluid flowing through the at least one heat exchange tube; wherein the flow enhancement device is disposed in the at least one heat exchange tube upstream of or at the determined peak heat flux area of the at least one heat exchange tube.

No. of Pages : 25 No. of Claims : 14

(12) PATENT APPLICATION PUBLICATION
(19) INDIA
(22) Date of filing of Application :08/08/2012
(21) Application No.6928/CHENP/2012 A
(43) Publication Date : 19/12/2014

(54) Title of the invention : METHODS AND APPARATUS FOR SCALING TRANSMIT POWER OF SIGNALS IN WIRELESS COMMUNICATIONS

(51) International classification :H04W52/24,H04W52/26,H04W52/38
(31) Priority Document No :12/708,084
(32) Priority Date :18/02/2010
(33) Name of priority country :U.S.A.
(86) International Application No :PCT/US2011/025320
Filing Date :17/02/2011
(87) International Publication No :WO/2011/103347
(61) Patent of Addition to Application Number :NA
Filing Date :NA
(62) Divisional to Application Number :NA
Filing Date :NA

(71)**Name of Applicant :**
1)QUALCOMM INCORPORATED
Address of Applicant :ATTN: International IP Administration 5775 Morehouse Drive San Diego California 92121-1714 U.S.A.
(72)**Name of Inventor :**
1)JUNYI LI
2)SAURABH TAVILDAR
3)ALEKSANDAR JOVICIC
4)THOMAS RICHARDSON

(57) Abstract :
Methods and apparatus of varying transmit power of signals for increasing system throughput and spectral reuse in an unlicensed spectrum are disclosed. One method includes transmitting from a first mobile device to a second mobile device a request to send (RTS) signal having a first transmit data power level based on a channel gain between the first mobile device and the second mobile device, receiving, at the first mobile device, a clear to send (CTS) signal from the second mobile device, and transmitting data at the first transmit data power level from the first mobile device to the second mobile device.

No. of Pages : 30 No. of Claims : 28

(12) PATENT APPLICATION PUBLICATION
(19) INDIA
(22) Date of filing of Application :12/10/2012
(21) Application No.8788/CHENP/2012 A
(43) Publication Date : 19/12/2014

(54) Title of the invention : UNIVERSAL ADDRESS BOOK ENABLING UPDATEABLE ELECTRONIC BUSINESS CARDS

(51) International classification	:H04M 1/2745,G06Q10/00,H04L29/08
(31) Priority Document No	:12/762,167
(32) Priority Date	:16/04/2010
(33) Name of priority country	:U.S.A.
(86) International Application No	:PCT/US2011/030023
Filing Date	:25/03/2011
(87) International Publication No	: NA
(61) Patent of Addition to Application Number	:NA
Filing Date	:NA
(62) Divisional to Application Number	:NA
Filing Date	:NA

(71)**Name of Applicant :**
1)QUALCOMM INCORPORATED
Address of Applicant :Attn: International IP Administration 5775 Morehouse Drive San Diego California 92121-1714 United States of America
(72)**Name of Inventor :**
1)MITCHELL Douglas R.

(57) Abstract :
A method is provided for synchronizing a universal address book located in a database amongst a first user and a second user. The first user sends an initialization message to the database and an invitation message to the second user. The first user receives an acceptance message from the second user and sends an update message to the database. The initialization message includes current personal data of the first user the invitation message includes a database pointer and the update message changes the personal data of the first user in the database which informs the second user of the changed data of the first user. Lightweight Directory Access Protocol (LDAP) used.

No. of Pages : 44 No. of Claims : 49

(12) PATENT APPLICATION PUBLICATION
(19) INDIA
(22) Date of filing of Application :12/11/2012
(21) Application No.9587/CHENP/2012 A
(43) Publication Date : 19/12/2014

(54) Title of the invention : IMPROVED LOW TITANIUM DIOXIDE COATINGS

(51) International classification :C09D7/00,C09D7/12
(31) Priority Document No :10161204.2
(32) Priority Date :27/04/2010
(33) Name of priority country :EPO
(86) International Application No :PCT/EP2011/056492
Filing Date :22/04/2011
(87) International Publication No :WO/2011/134908
(61) Patent of Addition to Application Number :NA
Filing Date :NA
(62) Divisional to Application Number :NA
Filing Date :NA

(71)**Name of Applicant :**
1)AKZO NOBEL COATINGS INTERNATIONAL B.V.
Address of Applicant :Velperweg 76 NL-6824 BM Arnhem The NETHERLANDS
(72)**Name of Inventor :**
1)WHEELER Stephen Arthur
2)WOODS Anthony David
3)EMMETT Simon Nicholas
4)PEREZ-AMOROS Javier

(57) Abstract :
An aqueous coating composition having a PVC of from 78 to 88% comprising based on the total volume solids of the dry coating unless otherwise stated a) opacifying pigment particles comprising: i) from 3 to 10% titanium dioxide ii) from 0 to 20% of hollow polymeric particles; b) non-opacifying extender particles comprising: i) calcium magnesium carbonate and/or ii) calcium carbonate and/or iii) nepheline syenite and/or iv) kaolin wherein i)+ii)+iii)+iv) = 40 to 80% and iv) is 0 to 20%; c) polymer binder particles of calculated Fox Tg of from 25 to 70°C having an acid value of from 15 to 65mg KOH/g of polymer and wherein the polymer particles are derived from acrylic monomers and optionally further comprising styrene and/or its derivatives; d) dispersant having a weight average molecular weight of at least 3500 Daltons; e) fugitive coalescing solvent wherein the composition is free of non- fugitive coalescing solvent.

No. of Pages : 31 No. of Claims : 19

(12) PATENT APPLICATION PUBLICATION
(19) INDIA
(22) Date of filing of Application :27/07/2012
(21) Application No.6657/CHENP/2012 A
(43) Publication Date : 19/12/2014

(54) Title of the invention : CHARGE RELAY ENHANCER AND A SOLAR CELL SYSTEM INCLUDING THE ENHANCER

(51) International classification :H02J7/35,H02M3/155
(31) Priority Document No :1020090134341
(32) Priority Date :30/12/2009
(33) Name of priority country :Republic of Korea
(86) International Application No :PCT/KR2010/009391
Filing Date :28/12/2010
(87) International Publication No :WO 2011/081391
(61) Patent of Addition to Application Number :NA
Filing Date :NA
(62) Divisional to Application Number :NA
Filing Date :NA

(71)**Name of Applicant :**
1)INDUSTRY UNIVERSITY COOPERATION FOUNDATION SUNMOON UNIVERSITY
Address of Applicant :Seonmun University 100 Galsan ri Tangjeong myeon Asan si Chungcheongnam do 336 708 Republic of Korea
(72)**Name of Inventor :**
1)AN Hyun Ku
2)KIM Hak Soo

(57) Abstract :
The present invention relates to a charge relay enhancer and to a solar cell system including the enhancer and more particularly relates to a charge relay enhancer which is used in relaying the charge produced in a solar cell to a charger and relates to a solar cell system including the enhancer. According to the present invention the charge relay enhancer and the solar cell system including the enhancer comprise: charge induction and pumping devices (120 130) for inducing charge by using one power source voltage from among two power source voltages (V V) of mutually different polarities selected in response to a control signal (CON) and for pumping the induced charge; and a charge pathway selecting device (110) for relaying the charges which have been input at input terminals (In) to the charge induction and pumping devices (120 130) via two input/output terminals (I/O1 I/O2) and for outputting the charges which have been pumped at the charge induction and pumping devices (120 130) to output terminals (Out) after respective receipt via the two input/output terminals (I/O1 I/O2).

No. of Pages : 21 No. of Claims : 17

(12) PATENT APPLICATION PUBLICATION
(19) INDIA
(22) Date of filing of Application :02/01/2013
(21) Application No.9/CHE/2013 A
(43) Publication Date : 19/12/2014

(54) Title of the invention : ADAPTABLE ROTARY TILLER FOR AGRICULTURAL VEHICLE(S)

(51) International classification :A01B
(31) Priority Document No :NA
(32) Priority Date :NA
(33) Name of priority country :NA
(86) International Application No :NA
Filing Date :NA
(87) International Publication No : NA
(61) Patent of Addition to Application Number :NA
Filing Date :NA
(62) Divisional to Application Number :NA
Filing Date :NA

(71)**Name of Applicant :**
1)TRACTORS AND FARM EQUIPMENT LIMITED
Address of Applicant :NO. 861, ANNASALAI, CHENNAI - 600 002 Tamil Nadu India
(72)**Name of Inventor :**
1)S. JAYAKANNA

(57) Abstract :
The present invention discloses an adaptable rotary tiller for agricultural vehicles, said rotary tiller being adaptable to any drop down drive variants. Said adaptable rotary tiller comprises of a jack shaft, a rotor shaft, a main frame and a side plate assembly, designed in a manner which makes it possible to interchange any of the drop down drive variants such as gear drive, chain drive or the like in the same rotary tiller. Said rotary tiller is capable of operating in single speed mode, multi-speed mode or the like. This is achieved by simply adding/removing components comprised in the rotary tiller variants such as chain, sprocket/gear with their respective shafts via the side plate assembly of rotary tiller and thereby not requiring to change the rotary tiller itself.

No. of Pages : 21 No. of Claims : 10

(12) PATENT APPLICATION PUBLICATION
(19) INDIA
(22) Date of filing of Application :15/11/2012
(21) Application No.9632/CHENP/2012 A
(43) Publication Date : 19/12/2014

(54) Title of the invention : CLASSIFICATION OF RANGE PROFILES

(51) International classification :G06K9/00,G01S7/41
(31) Priority Document No :10250803.3
(32) Priority Date :21/04/2010
(33) Name of priority country :EPO
(86) International Application No :PCT/GB2011/050761
Filing Date :18/04/2011
(87) International Publication No :WO/2011/131973
(61) Patent of Addition to Application Number :NA
Filing Date :NA
(62) Divisional to Application Number :NA
Filing Date :NA

(71)**Name of Applicant :**
1)BAE SYSTEMS PLC
Address of Applicant :6 Carlton Gardens London SW1Y 5AD U.K.
(72)**Name of Inventor :**
1)ROBERT JAMES MILLER

(57) Abstract :
A method and apparatus are provided for classifying range profiles, generated for example by a radar, lidar or sonar. In the method,each in a set of objects of interest is modelled with a probabilistic model. The probabilistic model represents the probabilities of occurrence of different possible sequences of distances between selected features of the object, in different orientations, that are likely to result in peaks of backscatter in a range profile of the object. The probabilistic model is derived from a first probabilistic representation of each selected feature, generated to represent the uncertainty in locating the feature and the uncertainty in observing the feature in a range profile. Classification is achieved by calculating, for each probabilistic model, the probability that the model would generate a given sequence of distances between observed backscatter events in a given range profile. The model generating the given sequence with the greatest probability identifies the object likely to have produced the given range profile. Preferably, the probabilistic models comprise Hidden Markov Models (HMMs).

No. of Pages : 19 No. of Claims : 15

(12) PATENT APPLICATION PUBLICATION
(19) INDIA
(22) Date of filing of Application :17/10/2012
(21) Application No.8921/CHENP/2012 A
(43) Publication Date : 19/12/2014

(54) Title of the invention : ESTIMATING TEMPERATURE

(51) International classification :G01K7/42
(31) Priority Document No :10163440.0
(32) Priority Date :20/05/2010
(33) Name of priority country :EPO
(86) International Application No :PCT/IB2011/052176
Filing Date :18/05/2011
(87) International Publication No :WO/2011/145063
(61) Patent of Addition to Application Number :NA
Filing Date :NA
(62) Divisional to Application Number :NA
Filing Date :NA

(71)**Name of Applicant :**
1)KONINKLIJKE PHILIPS ELECTRONICS N.V.
Address of Applicant :GROENEWOUDSEWEG 1 EINDHOVEN 5621 BA NETHERLANDS
(72)**Name of Inventor :**
1)SLADECEK Marcel
2)TOLK Michael

(57) Abstract :
A method of estimating a temperature of a material being heated is described. The method may comprise supplying electrical power to a heating element in dependence on a measured temperature calculating a rate at which the amount of electrical power supplied changes over time comparing the calculated rate with a plurality of known values in order to determine the value of a parameter relating to thermal properties of the material being heated and calculating an estimated temperature based on the determined value of said parameter. In some embodiments the method may further comprise detecting a drop in temperature of the material being heated by detecting a change in the calculated rate at which the amount of electrical power supplied changes over time.

No. of Pages : 27 No. of Claims : 15

(12) PATENT APPLICATION PUBLICATION
(19) INDIA
(22) Date of filing of Application :17/10/2012
(21) Application No.8922/CHENP/2012 A
(43) Publication Date : 19/12/2014

(54) Title of the invention : DISTANCE ESTIMATION USING SOUND SIGNALS

(51) International classification :G01S7/534,G01S15/32,G01S15/89
(31) Priority Document No :10163401.2
(32) Priority Date :20/05/2010
(33) Name of priority country :EPO
(86) International Application No :PCT/IB2011/052105
Filing Date :13/05/2011
(87) International Publication No :WO 2011/145030
(61) Patent of Addition to Application Number :NA
Filing Date :NA
(62) Divisional to Application Number :NA
Filing Date :NA

(71)**Name of Applicant :**
1)KONINKLIJKE PHILIPS ELECTRONICS N.V.
Address of Applicant :GROENEWOUDSEWEG 1 EINDHOVEN 5621 BA NETHERLANDS
(72)**Name of Inventor :**
1)LAMB William J.
2)AARTS Ronaldus M.

(57) Abstract :
An apparatus comprises a test signal generator (401) which generates an ultrasonic test signal by modulating an audio band test signal on an ultrasonic signal. The ultrasonic test signal is radiated from a parametric loudspeaker (403) and is demodulated by non-linearities in the air. A reflected audio signal may arise from reflections of an object such as a wall. An audio band sensor (405) generates an audio band captured signal which comprises the demodulated reflected audio band signal. A distance circuit (407) then generates a distance estimate for the distance from the parametric loudspeaker (403) to the object in response to a comparison of the audio band captured signal and the audio band test signal. Specifically two signals may be correlated to determine a delay corresponding to the full path length. Based on the distance estimates an audio environment may be estimated and a sound system may be adapted accordingly.

No. of Pages : 41 No. of Claims : 15

(12) PATENT APPLICATION PUBLICATION
(19) INDIA
(22) Date of filing of Application :17/10/2012
(21) Application No.8923/CHENP/2012 A
(43) Publication Date : 19/12/2014

(54) Title of the invention : REAL BOILING WATER

(51) International classification :A47J31/54,F24H1/12
(31) Priority Document No :10163410.3
(32) Priority Date :20/05/2010
(33) Name of priority country :EPO
(86) International Application No :PCT/IB2011/052035
Filing Date :09/05/2011
(87) International Publication No : NA
(61) Patent of Addition to Application Number :NA
Filing Date :NA
(62) Divisional to Application Number :NA
Filing Date :NA

(71)**Name of Applicant :**
1)KONINKLIJKE PHILIPS ELECTRONICS N.V.
Address of Applicant :GROENEWOUDSEWEG 1 EINDHOVEN 5621 BA NETHERLANDS
(72)**Name of Inventor :**
1)STOLK Theodoor
2)VAN DRIEL Jacqueline
3)KOOIJKER Klaas

(57) Abstract :
A boiling water dispenser (1) is disclosed comprisinga water inlet (2) and a water outlet (7) between which a flow path (11) exists. In this flow path a heating device (4) is arranged to heat water flowing through the flow path (11). Further the flow path comprises a pump (3) arranged to pump water from the water inlet (2) to the heating device (4) in a streaming direction through the flow path (11). A first restrictor element is (5) placed downstream of the heating device (4) in said flow path (11) creating an overpressure in said heating device (4). Also the boiling water dispenser (1) comprises a hot water reservoir (15) downstream of the first restrictor element (5) in said flow path (11) wherein said hot water reservoir(15) is arranged to allow gaseous water to separate from liquid water.

No. of Pages : 22 No. of Claims : 15

(12) PATENT APPLICATION PUBLICATION
(19) INDIA
(22) Date of filing of Application :15/11/2012
(21) Application No.9668/CHENP/2012 A
(43) Publication Date : 19/12/2014

(54) Title of the invention : INNOVATIVE DISCOVERY OF THERAPEUTIC DIAGNOSTIC AND ANTIBODY COMPOSITIONS RELATED TO PROTEIN FRAGMENTS OF CYSTEINYL-TRNA SYNTHETASE

(51) International classification	:A61K38/16,A61K38/17,A61K39/395
(31) Priority Document No	:61/328,087
(32) Priority Date	:26/04/2010
(33) Name of priority country	:U.S.A.
(86) International Application No	:PCT/US2011/033988
Filing Date	:26/04/2011
(87) International Publication No	:WO/2011/139714
(61) Patent of Addition to Application Number	:NA
Filing Date	:NA
(62) Divisional to Application Number	:NA
Filing Date	:NA

(71)**Name of Applicant :**
1)ATYR PHARMA INC.
Address of Applicant :3545 John Hopkins Court Suite #250 San Diego California 92121 United States of America
2)PANGU BIOPHARMA LIMITED
(72)**Name of Inventor :**
1)GREENE Leslie Ann
2)CHIANG Kyle P.
3)HONG Fei
4)VASSEROT Alain P.
5)LO Wing-Sze
6)WATKINS Jeffry D.
7)MENDLEIN John D.
8)QUINN Cheryl L.

(57) Abstract :
Provided are compositions comprising newly identified protein fragments of aminoacyl-tRNA synthetases polynucleotides that encode them and complements thereof related agents and methods of use thereof in diagnostic drug discovery research and therapeutic applications.

No. of Pages : 239 No. of Claims : 125

(12) PATENT APPLICATION PUBLICATION
(19) INDIA
(22) Date of filing of Application :22/12/2011
(21) Application No.9674/CHENP/2011 A
(43) Publication Date : 19/12/2014

(54) Title of the invention : NOVEL BIPHENYL AND PHENYL-PYRIDINE AMIDES

(51) International classification :C07C 237/42
(31) Priority Document No :61/219,016
(32) Priority Date :22/06/2009
(33) Name of priority country :U.S.A.
(86) International Application No :PCT/EP2010/058611
Filing Date :18/06/2010
(87) International Publication No :WO 2010/149578 A2
(61) Patent of Addition to Application Number :NA
Filing Date :NA
(62) Divisional to Application Number :NA
Filing Date :NA

(71)**Name of Applicant :**
1)F. HOFFMANN-LA ROCHE AG
Address of Applicant :124 GRENZACHERSTRASSE, CH-4070 BASEL Switzerland
(72)**Name of Inventor :**
1)BROKA, CHRIS, ALLEN
2)HAWLEY, RONALD CHARLES

(57) Abstract :
Compounds of the formula I: R7 O R2 I H R-NYR5 0 I or a pharmaceutically acceptable salt thereof, wherein, R1, R2, R3, R4, R5, R6, R7, and R8 are as defined herein. Also disclosed are methods of using the compounds for treating diseases associated with P2X3 and/or a P2X2/3 receptor antagonists and methods of making the compounds.

No. of Pages : 82 No. of Claims : 19

(12) PATENT APPLICATION PUBLICATION
(19) INDIA
(22) Date of filing of Application :28/09/2012
(21) Application No.8373/CHENP/2012 A
(43) Publication Date : 19/12/2014

(54) Title of the invention : POWER INVERTER WITH MULTI FED ON BOARD POWER SUPPLY

(51) International classification :H02M7/48,H02J3/38,H02J7/35
(31) Priority Document No :10155355.0
(32) Priority Date :03/03/2010
(33) Name of priority country :EPO
(86) International Application No :PCT/EP2011/053219
Filing Date :03/03/2011
(87) International Publication No :WO 2011/107555
(61) Patent of Addition to Application Number :NA
Filing Date :NA
(62) Divisional to Application Number :NA
Filing Date :NA

(71)**Name of Applicant :**
1)SMA SOLAR TECHNOLOGY AG
Address of Applicant :Sonnenallee 1 34266 Niestetal Germany
(72)**Name of Inventor :**
1)MLLER Burkard
2)BETHKE Lars

(57) Abstract :
An inverter (1) for feeding electric energy from at least one DC power source (3) into a DC power grid (4) comprises a DC/AC converter (5) connectable to the DC power grid (4); at least one DC/DC converter (9) arranged upstream of the DC/AC converter (5) and providing a galvanic isolation; a DC voltage link (10) at the input of the at least one DC/DC converter (9) and connectable to the at least one DC power source (3); at least one further DC voltage link (6) which is galvanically isolated from the first DC voltage link (10) by the DC/DC converter (9); on board voltage rails (15) supplying a controller and other auxiliary devices of the inverter (1) with electric energy; and an on board supply unit (14). The on board supply unit (14) is configured and adapted to feed the electric energy into the on board voltage rails (15) both out of the first DC voltage link (10) and out of the at least one further DC voltage link (6).

No. of Pages : 23 No. of Claims : 20

(12) PATENT APPLICATION PUBLICATION
(19) INDIA
(22) Date of filing of Application :28/09/2012
(21) Application No.8377/CHENP/2012 A
(43) Publication Date : 19/12/2014

(54) Title of the invention : HOT WORK TOOL AND METHOD FOR PRODUCING SAME

(51) International classification :B21B17/02,B21B23/00,B21B25/00
(31) Priority Document No :10 2010 009 954.6
(32) Priority Date :02/03/2010
(33) Name of priority country :Germany
(86) International Application No :PCT/EP2011/000643
Filing Date :11/02/2011
(87) International Publication No :WO 2011/107214
(61) Patent of Addition to Application Number :NA
Filing Date :NA
(62) Divisional to Application Number :NA
Filing Date :NA

(71)**Name of Applicant :**
1)SMS Meer GmbH
Address of Applicant :Ohlerkirchweg 66 41069 Mnchengladbach Germany
(72)**Name of Inventor :**
1)SERIN Kazim
2)PEHLE Hans Joachim

(57) Abstract :
The invention relates to a hot work tool in particular a piercing mandrel or a rolling bar for producing seamless pipes or a forging mandrel for hot forging tubular workpieces made of metal said tool having a main tool body (2) wherein at least one working area of the main tool body (2) is provided with a coating (4). In order to achieve an improved strength of the coating (4) on the main tool body according to the invention the main tool body (2) has a profiled surface (5) and the coating (4) is applied to the profiled surface (5). The invention further relates to a method for producing such a hot work tool.

No. of Pages : 15 No. of Claims : 3

(12) PATENT APPLICATION PUBLICATION
(19) INDIA
(22) Date of filing of Application :05/10/2012
(21) Application No.8548/CHENP/2012 A
(43) Publication Date : 19/12/2014

(54) Title of the invention : SALTY TASTE ENHANCER AND KELP EXTRACT COMPRISING THE SAME

(51) International classification :A23L1/22,A23L1/221
(31) Priority Document No :2010-089332
(32) Priority Date :08/04/2010
(33) Name of priority country :Japan
(86) International Application No :PCT/JP2011/059331
Filing Date :08/04/2011
(87) International Publication No : NA
(61) Patent of Addition to Application Number :NA
Filing Date :NA
(62) Divisional to Application Number :NA
Filing Date :NA

(71)**Name of Applicant :**
1)TAKASAGO INTERNATIONAL CORPORATION
Address of Applicant :37-1 Kamata 5-chome Ohta-ku Tokyo 144-8721 Japan
(72)**Name of Inventor :**
1)WATANABE Akihiko
2)NAKATOH Azusa
3)OIKAWA Takeshi

(57) Abstract :
To provide a salty taste enhancer which exerts a flavor enhancing effect comparable to sodium chloride without imparting any undesirable flavor such as harsh taste or odd smell a method for producing the same a kelp extract comprising the salty taste enhancer and a food or drink having enhanced salty taste and flavor which comprises the salty taste enhancer or the kelp extract.

No. of Pages : 43 No. of Claims : 11

(12) PATENT APPLICATION PUBLICATION
(19) INDIA
(22) Date of filing of Application :19/11/2012
(21) Application No.9730/CHENP/2012 A
(43) Publication Date : 19/12/2014

(54) Title of the invention : METHODS AND APPARATUS FOR ESTIMATING A GEOLOCATION OF A WIRELESS COMMUNICATIONS DEVICE

(51) International classification :G01S5/02
(31) Priority Document No :12/774,938
(32) Priority Date :06/05/2010
(33) Name of priority country :U.S.A.
(86) International Application No :PCT/US2011/035510
Filing Date :06/05/2011
(87) International Publication No :WO/2011/140435
(61) Patent of Addition to Application Number :NA
Filing Date :NA
(62) Divisional to Application Number :NA
Filing Date :NA

(71)**Name of Applicant :**
1)QUALCOMM INCORPORATED
Address of Applicant :ATTN: International IP Administration 5775 Morehouse Drive San Diego California 92121-1714 U.S.A.
(72)**Name of Inventor :**
1)ALEKSANDAR JOVICIC
2)THOMAS RICHARDSON
3)CYRIL MEASSON

(57) Abstract :
The methods and apparatus described herein are used to perform indoor and urban geolocation positioning. One method of estimating a geolocation of one of a first wireless device or a second wireless device includes receiving, at the first wireless device, a signal from the second wireless device, determining, at the first wireless device, a physical characteristic of the received signal, and determining, at the first wireless device, a region on a map representing a geolocation of the first wireless device or the second wireless device based on the physical characteristic of the received signal, a state transition matrix and a state occupancy vector.

No. of Pages : 43 No. of Claims : 136

(12) PATENT APPLICATION PUBLICATION
(19) INDIA
(22) Date of filing of Application :19/11/2012
(21) Application No.9731/CHENP/2012 A
(43) Publication Date : 19/12/2014

(54) Title of the invention : USING A JOINT DECODING ENGINE IN A WIRELESS DEVICE

(51) International classification :H04L1/00,H04B1/7107,H04L25/03
(31) Priority Document No :12/769,916
(32) Priority Date :29/04/2010
(33) Name of priority country :U.S.A.
(86) International Application No :PCT/US2011/034140
Filing Date :07/04/2011
(87) International Publication No :WO/2011/139770
(61) Patent of Addition to Application Number :NA
Filing Date :NA
(62) Divisional to Application Number :NA
Filing Date :NA

(71)**Name of Applicant :**
1)QUALCOMM INCORPORATED
Address of Applicant :ATTN: International IP Administration 5775 Morehouse Drive San Diego California 92121-1714 U.S.A.
(72)**Name of Inventor :**
1)JIA TANG
2)ATUL A SALVEKAR
3)SHANTANU KHARE
4)GOKHAN MERGEN
5)JONATHAN SIDI
6)JONG HYEON PARK
7)SUBRAMANYA P.RAO
8)GUPTA ABHINAV

(57) Abstract :
A method for using a joint decoding engine in a wireless device is disclosed. A first symbol stream and a second symbol stream in a received multiple input multiple output (MIMO) signal is determined. A scaled channel estimate for a wireless transmission channel and a scaled noise covariance of the MIMO signal are also determined. The scaled channel estimate and the first symbol stream are whitened. Max log maximum a posteriori (MLM) processing is performed on the whitened first symbol stream to produce a first data stream. The first data stream may be de-rate matched and decoded to produce a decoded first data stream.

No. of Pages : 42 No. of Claims : 30

(12) PATENT APPLICATION PUBLICATION
(19) INDIA
(22) Date of filing of Application :01/11/2012
(21) Application No.9323/CHENP/2012 A
(43) Publication Date : 19/12/2014

(54) Title of the invention : METHODS AND COMPOSITIONS FOR INHIBITING HIV TRANSMISSION

(51) International classification :A61K39/42,A61P31/18
(31) Priority Document No :61/322,399
(32) Priority Date :09/04/2010
(33) Name of priority country :U.S.A.
(86) International Application No :PCT/AU2011/000407
Filing Date :11/04/2011
(87) International Publication No :WO/2011/123900
(61) Patent of Addition to Application Number :NA
Filing Date :NA
(62) Divisional to Application Number :NA
Filing Date :NA

(71)**Name of Applicant :**
1)IMMURON LIMITED
Address of Applicant :Level 1 39 Leveson Street North Melbourne Victoria 3051 Australia
(72)**Name of Inventor :**
1)RAWLIN Grant Thomas
2)PURCELL Damian Francis John
3)CENTER Robert John
4)KRAMSKI Marit
5)ROBINS-BROWNE Roy Michael
6)LICHTI Gottfried

(57) Abstract :
The present invention provides methods and compositions useful in the field of medicine and particularly in the treatment of viral infections. More particularly the invention relates to the use of methods and compositions for the inhibition of human immunodeficiency virus (HIV) transmission.

No. of Pages : 66 No. of Claims : 56

(12) PATENT APPLICATION PUBLICATION
(19) INDIA
(22) Date of filing of Application :09/11/2012
(21) Application No.9553/CHENP/2012 A
(43) Publication Date : 19/12/2014

(54) Title of the invention : ORIENTATION SENSOR CALIBRATION

(51) International classification :G01C17/38,G01C21/02,G01C25/00
(31) Priority Document No :12/775,935
(32) Priority Date :07/05/2010
(33) Name of priority country:U.S.A.
(86) International Application No :PCT/US2011/035620
Filing Date :06/05/2011
(87) International Publication No :WO/2011/140501
(61) Patent of Addition to Application Number :NA
Filing Date :NA
(62) Divisional to Application Number :NA
Filing Date :NA

(71)**Name of Applicant :**
1)QUALCOMM INCORPORATED
Address of Applicant :Attn: International IP Administration 5775 Morehouse Drive San Diego California 92121-1714 United States of America
(72)**Name of Inventor :**
1)KULIK Victor

(57) Abstract :
A mobile device configured to be used in a wireless communication network includes: an image capture device; at least one sensor configured to measure a first orientation of the mobile device; and a processor communicatively coupled to the image capture device and the at least one sensor and configured to: identify an object in an image captured by the image capture device; use a position of the mobile device to determine an actual location of the object relative to the mobile device; and use the actual location of the object relative to the mobile device and the image to determine a correction for the sensor.

No. of Pages : 39 No. of Claims : 30

(12) PATENT APPLICATION PUBLICATION
(19) INDIA
(22) Date of filing of Application :09/11/2012
(21) Application No.9555/CHENP/2012 A
(43) Publication Date : 19/12/2014

(54) Title of the invention : APPARATUS AND METHODS EMPLOYING VARIABLE CLOCK GATING HYSTERESIS FOR A COMMUNICATIONS PORT

(51) International classification :G06F1/32,G06F1/04
(31) Priority Document No :12/772,484
(32) Priority Date :03/05/2010
(33) Name of priority country :U.S.A.
(86) International Application No :PCT/US2011/034080
Filing Date :27/04/2011
(87) International Publication No :WO/2011/139744
(61) Patent of Addition to Application Number :NA
Filing Date :NA
(62) Divisional to Application Number :NA
Filing Date :NA

(71)**Name of Applicant :**
1)QUALCOMM INCORPORATED
Address of Applicant :Attn: International IP Administration 5775 Morehouse Drive San Diego California 92121-1714 United States of America
(72)**Name of Inventor :**
1)HOFMANN Richard Gerard

(57) Abstract :
An apparatus includes a communications port configured to communicate over a bus responsive to a clock signal and a clock signal generation circuit configured to generate the clock signal and to vary a gating hysteresis of the clock signal responsive to a control input such as a communications transaction of the port. The clock signal generation circuit may be configured to vary the gating hysteresis of the clock signal based on an attribute of the transaction such as an address of the transaction and/or a payload communicated in the transaction.

No. of Pages : 30 No. of Claims : 23

(12) PATENT APPLICATION PUBLICATION
(19) INDIA
(22) Date of filing of Application :09/11/2012
(21) Application No.9557/CHENP/2012 A
(43) Publication Date : 19/12/2014

(54) Title of the invention : DEVICE CAPABLE OF NOTIFYING OPERATION STATE CHANGE THEREOF THROUGH NETWORK AND COMMUNICATION METHOD OF THE DEVICE

(51) International classification :H04W4/12
(31) Priority Document No :61/323,452
(32) Priority Date :13/04/2010
(33) Name of priority country :U.S.A.
(86) International Application No :PCT/KR2011/002467
Filing Date :08/04/2011
(87) International Publication No :WO/2011/129551
(61) Patent of Addition to Application Number :NA
Filing Date :NA
(62) Divisional to Application Number :NA
Filing Date :NA

(71)**Name of Applicant :**
1)SAMSUNG ELECTRONICS CO. LTD.
Address of Applicant :129 Samsung-ro Yeongtong-gu Suwon-si Gyeonggi-do 443-742 Republic of Korea.
(72)**Name of Inventor :**
1)JUNG Bae-Eun
2)PARK Tae-Sung
3)JUNG Hae-Taek
4)MAENG Je-Young

(57) Abstract :
A method of notifying an operation state change of a device the method involving forming a network of devices used by a user and that perform network communication; when an operation state change of a first device in the network occurs searching for at least one device currently being used by the user in the network of devices; and transmitting information regarding the operation state change of the first device to the at least one device wherein the information regarding the operation state change of the first device is displayed on a display unit of the at least one device.

No. of Pages : 37 No. of Claims : 15

(12) PATENT APPLICATION PUBLICATION
(19) INDIA
(22) Date of filing of Application :06/12/2013
(21) Application No.9760/CHENP/2013 A
(43) Publication Date : 19/12/2014

(54) Title of the invention : PHOTOGRAPHING APPARATUS

(51) International classification :H04N5/225,G03B11/00
(31) Priority Document No :1020110044876
(32) Priority Date :13/05/2011
(33) Name of priority country :Republic of Korea
(86) International Application No :PCT/KR2012/003606
Filing Date :09/05/2012
(87) International Publication No :WO 2012/157882
(61) Patent of Addition to Application Number :NA
Filing Date :NA
(62) Divisional to Application Number :NA
Filing Date :NA

(71)**Name of Applicant :**
1)SAMSUNG ELECTRONICS CO. LTD.
Address of Applicant :129 Samsung ro Yeongtong gu Suwon si Gyeonggi do 443 742 Republic of Korea
(72)**Name of Inventor :**
1)JI Eun ho
2)HWANG Chi hun

(57) Abstract :
A photographing apparatus includes an imaging device that converts an optical image of an object into an electrical signal; a vibration plate disposed at a front direction of the imaging device; a vibration generator which is mounted on the vibration plate and vibrates the vibration plate; a support frame which is located between the imaging device and the vibration plate and supports edges of the vibration plate; and a vibration plate pressing unit which is connected in the support frame and includes a part which presses at least an area of the vibration plate.

No. of Pages : 17 No. of Claims : 11

(12) PATENT APPLICATION PUBLICATION
(19) INDIA
(22) Date of filing of Application :20/11/2012
(21) Application No.9761/CHENP/2012 A
(43) Publication Date : 19/12/2014

(54) Title of the invention : ACQUISITION OF NAVIGATION ASSISTANCE INFORMATION FOR A MOBILE STATION

(51) International classification :G01S5/02,G01C21/20
(31) Priority Document No :12/813,351
(32) Priority Date :10/06/2010
(33) Name of priority country :U.S.A.
(86) International Application No :PCT/US2011/040098
Filing Date :10/06/2011
(87) International Publication No :WO 2011/156792
(61) Patent of Addition to Application Number :NA
Filing Date :NA
(62) Divisional to Application Number :NA
Filing Date :NA

(71)**Name of Applicant :**
1)QUALCOMM INCORPORATED
Address of Applicant :Attn: International IP Administration 5775 Morehouse Drive San Diego California 92121-1714 United States of America
(72)**Name of Inventor :**
1)DO Ju-Yong
2)FARMER Dominic Gerard

(57) Abstract :
Navigation assistance information for a mobile station is acquired based on a feature descriptor of an image of a visual beacon captured by the mobile station. The navigation assistance information includes locations of neighboring visual beacons locations of wireless positioning resources; user environmental context information. The navigation assistance information may then be used to assist in navigating within the local environment. The visual beacon may be an artificial feature such as a QR code or other type of matrix or bar code or a natural feature such as a statute or architectural detail. The mobile station may request navigation assistance by transmitting the feature descriptor to a server. The server retrieves the navigation assistance information from a database based on the feature descriptor and optionally location information which may also be provided in the navigation assistance request and transmits the navigation assistance information to the mobile station.

No. of Pages : 36 No. of Claims : 44

(12) PATENT APPLICATION PUBLICATION
(19) INDIA
(22) Date of filing of Application :14/08/2012
(21) Application No.7114/CHENP/2012 A
(43) Publication Date : 19/12/2014

(54) Title of the invention : DEVICE AND METHOD FOR PROCESSING WATER AND CLEANING FOODS

(51) International classification :A47J43/24,C02F1/461
(31) Priority Document No :201010129289.9
(32) Priority Date :03/03/2010
(33) Name of priority country :China
(86) International Application No :PCT/IB2011/050796
Filing Date :25/02/2011
(87) International Publication No :WO/2011/107913
(61) Patent of Addition to Application Number :NA
Filing Date :NA
(62) Divisional to Application Number :NA
Filing Date :NA

(71)**Name of Applicant :**
1)KONINKLIJKE PHILIPS ELECTRONICS N.V.
Address of Applicant :GROENEWOUDSEWEG 1 EINDHOVEN 5621 BA NETHERLANDS
(72)**Name of Inventor :**
1)WANG Weiran
2)SHI Jun
3)ZHANG Huanhuan
4)WANG Xiao Xin
5)SUN Wen

(57) Abstract :
To provide a small device for providing water quickly the invention provides a device and method for processing water and cleaning foods. The device (1) processes water contained in a container (2); the device (1) comprises a first unit (10) for inputting water from said container (2) into said device (1); a second unit (12) for generating from the input water a first output water with higher pH value than that of the input water and a second output water with lower pH value than that of the input water; and a third unit (14) for outputting the first output water or second output water back to said container (2). Thus if the first output water is output back to the container and the process continuously conduct the steps the alkalinity of the water in the container is increased gradually and quickly.

No. of Pages : 23 No. of Claims : 15

(12) PATENT APPLICATION PUBLICATION
(19) INDIA
(22) Date of filing of Application :14/08/2012
(21) Application No.7119/CHENP/2012 A
(43) Publication Date : 19/12/2014

(54) Title of the invention : KIT OF PARTS CONNECTION DEVICE LIGHTING DEVICE AND LUMINAIRE

(51) International classification :H01F38/14,H02J17/00
(31) Priority Document No :10155356.8
(32) Priority Date :03/03/2010
(33) Name of priority country :EPO
(86) International Application No :PCT/IB2011/050487
Filing Date :04/02/2011
(87) International Publication No :WO/2011/107897
(61) Patent of Addition to Application Number :NA
Filing Date :NA
(62) Divisional to Application Number :NA
Filing Date :NA

(71)**Name of Applicant :**
1)KONINKLIJKE PHILIPS ELECTRONICS N.V.
Address of Applicant :GROENEWOUDSEWEG 1 EINDHOVEN 5621 BA NETHERLANDS
(72)**Name of Inventor :**
1)DEN DULK Jacob Cornelis Paul

(57) Abstract :
A kit of parts (1) comprising an electric cable (3) comprising hermetically sealed electric conductors a connection device (5) comprising a first (9a) and a second connection part (9b) the first and second connection part each comprising a cavity (12) in which a respective secondary conduction coil (14) is arranged and connected to respective electrical contacts. In a connected arrangement of the connection device and the electric cable the wire is wound around both the first connection part in a first winding sense and around the second connection part in a second opposite winding sense. Thus a watertight electric connection between the cable and the connection device is established.

No. of Pages : 12 No. of Claims : 13

(12) PATENT APPLICATION PUBLICATION
(19) INDIA
(22) Date of filing of Application :24/08/2012
(21) Application No.7390/CHENP/2012 A
(43) Publication Date : 19/12/2014

(54) Title of the invention : METHOD TO INCREASE SOLUBILITY LIMIT OF REBAUDIOSIDE D IN AN AQUEOS SOLUTION

(51) International classification :A23L2/60,A23L1/236,A23L2/68
(31) Priority Document No :12/700,223
(32) Priority Date :04/02/2010
(33) Name of priority country :U.S.A.
(86) International Application No :PCT/US2011/023574
Filing Date :03/02/2011
(87) International Publication No :WO/2011/097359
(61) Patent of Addition to Application Number :NA
Filing Date :NA
(62) Divisional to Application Number :NA
Filing Date :NA

(71)**Name of Applicant :**
1)PEPSICO INC.
Address of Applicant :700 Anderson Hill Road Purchase New York 10577 United States of America
(72)**Name of Inventor :**
1)YOO Hyung S.
2)WINTAMUTE Corey

(57) Abstract :
Low pH beverage products which include rebaudioside D are provided. Methods of making low pH beverage products which include rebaudioside D are provided. Methods of making syrups which include rebaudioside D are provided. Methods of making supersaturated solutions of rebaudioside D are provided.

No. of Pages : 37 No. of Claims : 39

(12) PATENT APPLICATION PUBLICATION
(19) INDIA
(22) Date of filing of Application :25/10/2012
(21) Application No.9176/CHENP/2012 A
(43) Publication Date : 19/12/2014

(54) Title of the invention : AUDIBLE AUTHENTICATION FOR WIRELESS NETWORK ENROLLMENT

(51) International classification :H04W12/12,H04W12/06
(31) Priority Document No :12/800,173
(32) Priority Date :10/05/2010
(33) Name of priority country :U.S.A.
(86) International Application No :PCT/US2011/035949
Filing Date :10/05/2011
(87) International Publication No : NA
(61) Patent of Addition to Application Number :NA
Filing Date :NA
(62) Divisional to Application Number :NA
Filing Date :NA

(71)**Name of Applicant :**
1)INTEL CORPORATION
Address of Applicant :2200 MISSION COLLEGE BLVD. SANTA CLARA CA 95052 UNITED STATES OF AMERICA
(72)**Name of Inventor :**
1)MEYLEMANS Marc
2)MARTZ JR. Gary A.

(57) Abstract :
Described herein are one or more techniques for using an audible authentication of a wireless device for enrollment onto a secure wireless network. With one or more described techniques an unauthorized wireless device audibly emits a uniquely identifying secret code (e.g. a personal identification number (PIN)). In some implementations the audible code is heard by the user and manually entered via a network-enrollment user interface. In other implementations a network-authorizing device automatically picks up the audible code and verifies the code. If verified the wireless device is enrolled onto the wireless network.

No. of Pages : 21 No. of Claims : 20

(12) PATENT APPLICATION PUBLICATION
(19) INDIA
(22) Date of filing of Application :21/11/2012
(21) Application No.9800/CHENP/2012 A
(43) Publication Date : 19/12/2014

(54) Title of the invention : SYSTEM AND METHOD FOR SOUND PROCESSING

(51) International classification :H04S7/00,H04S5/00
(31) Priority Document No :10164679.2
(32) Priority Date :02/06/2010
(33) Name of priority country :EPO
(86) International Application No :PCT/IB2011/052356
Filing Date :30/05/2011
(87) International Publication No :WO/2011/151771
(61) Patent of Addition to Application Number :NA
Filing Date :NA
(62) Divisional to Application Number :NA
Filing Date :NA

(71)**Name of Applicant :**
1)KONINKLIJKE PHILIPS ELECTRONICS N.V.
Address of Applicant :GROENEWOUDSEWEG 1 EINDHOVEN 5621 BA NETHERLANDS
(72)**Name of Inventor :**
1)HARMA Aki Sakari

(57) Abstract :
A sound processing system receives a stereo signal which by a segmenter (109) is divided into stereo time- frequency signal segments each of which may correspond to a frequency domain sample in a given time segment. A decomposer (111) decomposes the time- frequency signal segments by for each pair of stereo time-frequency signal segments performing the steps of: determining a similarity measure indicative of a degree of similarity of the stereo time frequency signal segments; generating a sum time- frequency signal segment as a sum of the stereo time-frequency signal segments; and generating a centre time- frequency signal segment from the sum time- frequency signal segment and a pair of side stereo time- frequency segments from the pair of stereo time- frequency signal segments in response to the similarity measure.

No. of Pages : 28 No. of Claims : 15

(12) PATENT APPLICATION PUBLICATION
(19) INDIA
(22) Date of filing of Application :21/10/2013
(21) Application No.8444/CHENP/2013 A
(43) Publication Date : 19/12/2014

(54) Title of the invention : 5 MEMBERED RING AROMATIC HETEROCYCLIC DERIVATIVE HAVING NPY Y5 RECEPTOR ANTAGONISTIC ACTIVITY

(51) International classification :C07D271/06,A61K31/421,A61K31/4245
(31) Priority Document No :2011099397
(32) Priority Date :27/04/2011
(33) Name of priority country :Japan
(86) International Application No :PCT/JP2012/061032
Filing Date :25/04/2012
(87) International Publication No :WO 2012/147764
(61) Patent of Addition to Application Number :NA
Filing Date :NA
(62) Divisional to Application Number :NA
Filing Date :NA

(71)**Name of Applicant :**
1)Shionogi & Co. Ltd.
Address of Applicant :1 8 Doshomachi 3 chome Chuo ku Osaka shi Osaka 5410045 Japan
(72)**Name of Inventor :**
1)HAYASHI Kyohei
2)TAMURA Yuusuke
3)OMORI Naoki

(57) Abstract :
Provided is a novel compound having NPY Y5 receptor antagonistic activity. It was discovered that a compound represented by (1) (where R is an optionally substituted alkyl and the like; p q and r are each independently 0 or 1; ring A is an oxadiazole; and R is an optionally substituted alkyl and the like) has NPY Y5 receptor antagonistic activity.

No. of Pages : 97 No. of Claims : 25

(12) PATENT APPLICATION PUBLICATION
(19) INDIA
(22) Date of filing of Application :26/10/2012
(21) Application No.9185/CHENP/2012 A
(43) Publication Date : 19/12/2014

(54) Title of the invention : INTERACTIVE SYSTEM FOR USE IN CONNECTION WITH THE IDENTIFICATION AND/OR MANAGEMENT OF PSYCHOLOGICAL ISSUES

(51) International classification :G06Q10/10,G06Q30/02,G06Q50/22
(31) Priority Document No :1005835.2
(32) Priority Date :08/04/2010
(33) Name of priority country :U.K.
(86) International Application No :PCT/GB2011/050241
Filing Date :10/02/2011
(87) International Publication No :WO 2011/124900
(61) Patent of Addition to Application Number :NA
Filing Date :NA
(62) Divisional to Application Number :NA
Filing Date :NA

(71)**Name of Applicant :**
1)BREAKING FREE ONLINE LIMITED
Address of Applicant :274 Deansgate Manchester M3 4JB United Kingdom
(72)**Name of Inventor :**
1)HUMPHREYS Lloyd

(57) Abstract :
A system for use in connection with the management of psychological issues comprises: a user terminal (101) connected to a remote server (110) via a suitable communication link (105). The user terminal (101) comprises at a least a display (102), user actuable input means (103) and an interface engine 104 operable in conjunction with the display (102) and the user input means (103) to provide one or more structured data interfaces facilitating user input of data which may be forwarded over the communication link (105). The remote server (110) comprises a management engine (111) operable to receive and process data from the interface engine (104) via network (105), Based on the inputs to a plurality of psychological data input interfaces a classification interface (400) is generated and displayed on display (102), The (interface 400) comprises a plurality of selectable indicator areas (411-416) relating to specific categories of psychological issues and colour coded according so that a user can readily identify the areas where the issues are most serious. The classification interface (400) thus provides a readily intelligible overview of a users psychological issues and their relative severity. The user can thus easily identify their issues and which issues might be in most urgent need of management.

No. of Pages : 39 No. of Claims : 82

(12) PATENT APPLICATION PUBLICATION
(19) INDIA
(22) Date of filing of Application :15/12/2011
(21) Application No.9401/CHENP/2011 A
(43) Publication Date : 19/12/2014

(54) Title of the invention : BRIDGED SPIRO[2.4]HEPTANE DERIVATIVES

(51) International classification :C07C233/58
(31) Priority Document No :PCT/IB2009/052056
(32) Priority Date :18/05/2009
(33) Name of priority country :PCT
(86) International Application No :PCT/IB2010/052170
Filing Date :17/05/2010
(87) International Publication No :WO 2010/134014 A1
(61) Patent of Addition to Application Number :NA
Filing Date :NA
(62) Divisional to Application Number :NA
Filing Date :NA

(71)**Name of Applicant :**
1)ACTELION PHARMACEUTICALS LTD.
Address of Applicant :GEWERBESTRASSE 16, CH-4123 ALLSCHWIL Switzerland
(72)**Name of Inventor :**
1)BUR, DANIEL
2)CORMINBOEUF, OLIVER
3)CREN, SYLVAINE
4)GRISOSTOMI, CORINNA
5)LEROY, XAVIER
6)RICHARD-BILDSTEIN, SYLVIA

(57) Abstract :
The present invention relates to bridged spiro[2.4]heptane derivatives of fomiula (1), wherein W, Y, Z, R1 and R2 are as defined in the description, their preparation and their use as phamiaceutically active compounds.

No. of Pages : 329 No. of Claims : 15

(12) PATENT APPLICATION PUBLICATION
(19) INDIA
(22) Date of filing of Application :10/12/2013
(21) Application No.9816/CHENP/2013 A
(43) Publication Date : 19/12/2014

(54) Title of the invention : CARTRIDGE HOLDER ASSEMBLY FOR DRUG DELIVERY DEVICES

(51) International classification :A61M5/24
(31) Priority Document No :11170308.8
(32) Priority Date :17/06/2011
(33) Name of priority country :EPO
(86) International Application No :PCT/EP2012/061249
Filing Date :14/06/2012
(87) International Publication No :WO 2012/171981
(61) Patent of Addition to Application Number :NA
Filing Date :NA
(62) Divisional to Application Number :NA
Filing Date :NA

(71)**Name of Applicant :**
1)SANOFI AVENTIS DEUTSCHLAND GMBH
Address of Applicant :Br¼ningstrae 50 65929 Frankfurt am Main Germany
(72)**Name of Inventor :**
1)JUGL Michael
2)KRAFT Torsten
3)VOGT Daniel
4)FORSTREUTER Axel

(57) Abstract :
Cartridge holder assembly for Drug Delivery Devices The present invention relates to a drug delivery device for administering a predefined dose of a medicament comprising a housing. The housing comprising: a body (14) to accommodate a drive mechanism a cartridge holder (12) to accommodate a cartridge having a piston slidably disposed therein in an axial direction (z) an interconnection (59) between cartridge holder (12) and body (14) said interconnection having at least one displaceable or resiliently deformable latch element (68; 74; 82) to mate with a corresponding bearing (54; 90) wherein the latch element (68; 74; 82) is displaceable or deformable in a direction (z w) extending substantially parallel to a circumferential side wall (52 65) of the body (14) or cartridge holder (12).

No. of Pages : 26 No. of Claims : 13

(12) PATENT APPLICATION PUBLICATION
(19) INDIA
(22) Date of filing of Application :10/12/2013
(21) Application No.9818/CHENP/2013 A
(43) Publication Date : 19/12/2014

(54) Title of the invention : IMAGE DISPLAY APPARATUS

(51) International classification :G06T7/00,G06F9/44
(31) Priority Document No :11305775.6
(32) Priority Date :21/06/2011
(33) Name of priority country :EPO
(86) International Application No :PCT/IB2012/052818
Filing Date :05/06/2012
(87) International Publication No :WO 2012/176085
(61) Patent of Addition to Application Number :NA
Filing Date :NA
(62) Divisional to Application Number :NA
Filing Date :NA

(71)**Name of Applicant :**
1)KONINKLIJKE PHILIPS N.V.
Address of Applicant :High Tech Campus 5 NL 5656 AE Eindhoven Netherlands
(72)**Name of Inventor :**
1)BYSTROV Daniel
2)VIK Torbjoern
3)SCHULZ Heinrich

(57) Abstract :
The invention relates to an image display apparatus for displaying an image like a three dimensional medical image of an object. A template providing unit (3) provides a template defining display parameters for displaying the image based on anatomical features of the object and an anatomical feature detecting unit (4) detects an anatomical feature in the image. A display parameter determining unit (5) determines a display parameter defining for example a desired view based on the detected anatomical feature and the template and a display unit (8) displays the image by displaying for example the desired view in accordance with the determined display parameter. This allows the image display apparatus to show the image on the display in a desired usual way as defined by the template even if in the originally provided image the object is shown in an unusual way.

No. of Pages : 32 No. of Claims : 15

(12) PATENT APPLICATION PUBLICATION
(19) INDIA
(22) Date of filing of Application :05/11/2012
(21) Application No.9418/CHENP/2012 A
(43) Publication Date : 19/12/2014

(54) Title of the invention : HYDROGENATION OF FATTY ACIDS USING A PROMOTED SUPPORTED NICKEL CATALYST

(51) International classification :C11C3/12,B01J23/755,B01J33/00
(31) Priority Document No :10160791.9
(32) Priority Date :22/04/2010
(33) Name of priority country :EPO
(86) International Application No :PCT/NL2011/050276
Filing Date :21/04/2011
(87) International Publication No :WO/2011/133037
(61) Patent of Addition to Application Number :NA
Filing Date :NA
(62) Divisional to Application Number :NA
Filing Date :NA

(71)**Name of Applicant :**
1)BASF CORPORATION
Address of Applicant :100 Campus Drive Florham Park New Jersey 07932 U.S.A.
(72)**Name of Inventor :**
1)BOUWMAN Hermanus Johannes
2)TER–RDE Robert Johan Andreas Maria

(57) Abstract :
The invention is directed to a process for the hydrogenation of unsaturated fatty acids to produce saturated fatty acids said process comprising hydrogenating the unsaturated fatty acid in the presence of hydrogen and a supported nickel catalyst said supported nickel catalyst comprising an oxidic support 5 to 80 wt. % of nickel calculated as atomic nickel on the weight of the catalyst 0.1 to 10 wt. % of a copper promoter calculated as atomic copper on the weight of the catalyst and 1 to 10 wt. % of a group II metal calculated as metallic oxide on the weight of the catalyst.

No. of Pages : 12 No. of Claims : 15

(12) PATENT APPLICATION PUBLICATION
(19) INDIA
(22) Date of filing of Application :10/12/2013
(21) Application No.9821/CHENP/2013 A
(43) Publication Date : 19/12/2014

(54) Title of the invention : DC DC DRIVER DEVICE HAVING INPUT AND OUTPUT FILTERS FOR DRIVING A LOAD IN PARTICULAR AN LED UNIT

(51) International classification :H02M3/158,H05B33/08
(31) Priority Document No :11170278.3
(32) Priority Date :17/06/2011
(33) Name of priority country :EPO
(86) International Application No :PCT/IB2012/052841
Filing Date :06/06/2012
(87) International Publication No :WO 2012/172459
(61) Patent of Addition to Application Number :NA
Filing Date :NA
(62) Divisional to Application Number :NA
Filing Date :NA

(71)**Name of Applicant :**
1)KONINKLIJKE PHILIPS N.V.
Address of Applicant :High Tech Campus 5 NL 5656 AE Eindhoven Netherlands
(72)**Name of Inventor :**
1)ELFERICH Reinhold
2)LOPEZ Toni

(57) Abstract :
The present invention relates to a driver device (50a 50f) and a corresponding method for driving a load (22) in particular an LED unit comprising one or more LEDs (23). The proposed driver device comprises power input terminals (51 52) for receiving a rectified supply voltage (vr) from an external power supply power output terminals (53 54) for providing a drive voltage and/or current for driving a load (22) a half bridge unit (70) comprising a first (60) and second (61) switching element coupled in series between a high voltage node (57) and a low voltage node (58) and having a switch node (59) between said first and second switching elements a buck boost input filter unit (71) comprising a first inductor (Lm) and a series diode (Dm) coupled between a power input terminal (51 52) and said half bridge unit (70) a buck output filter unit (72) comprising a second inductor (Lo Lc) coupled between said half bridge unit (70) and a power output terminal (53 54) an energy storage unit (73) and a control unit (64) for controlling said switching elements (60 61).

No. of Pages : 33 No. of Claims : 14

(12) PATENT APPLICATION PUBLICATION
(19) INDIA
(22) Date of filing of Application :10/12/2013
(21) Application No.9822/CHENP/2013 A
(43) Publication Date : 19/12/2014

(54) Title of the invention : SINGLE SWITCH DRIVER DEVICE HAVING LC FILTER FOR DRIVING A LOAD IN PARTICULAR AN LED UNIT

(51) International classification :H05B33/08
(31) Priority Document No :11170268.4
(32) Priority Date :17/06/2011
(33) Name of priority country :EPO
(86) International Application No :PCT/IB2012/052936
Filing Date :11/06/2012
(87) International Publication No :WO 2012/172472
(61) Patent of Addition to Application Number :NA
Filing Date :NA
(62) Divisional to Application Number :NA
Filing Date :NA

(71)**Name of Applicant :**
1)KONINKLIJKE PHILIPS N.V.
Address of Applicant :High Tech Campus 5 NL 5656 AE Eindhoven Netherlands
(72)**Name of Inventor :**
1)LOPEZ Toni
2)ELFERICH Reinhold

(57) Abstract :
The present invention relates to a driver device (50a 50f) and a corresponding method for driving a load (22) in particular an LED unit comprising one or more LEDs (23). The proposed driver device comprises power input terminals (51 52) for receiving a rectified supply voltage from an external power supply power output terminals (53 54) for providing a drive voltage and/or current for driving a load (22) a single stage power conversion unit (66a 66b 66c) coupled to the power input terminals (52) comprising a single switching element (60) and an energy storage element (Ch) both coupled to a switch node (55) wherein the power output terminals (53 54) are represented by the output of said stage power conversion unit a filter unit (68) coupled to said switch node (55) said filter unit comprising a filter inductor (Lc) and a filter capacitor (Cs) and a control unit (58) for controlling said switching element (60).

No. of Pages : 34 No. of Claims : 15

(12) PATENT APPLICATION PUBLICATION
(19) INDIA
(22) Date of filing of Application :16/10/2012
(21) Application No.8858/CHENP/2012 A
(43) Publication Date : 19/12/2014

(54) Title of the invention : SYSTEM AND METHOD FOR SCHEDULING TIMESLOTS FOR TRANSMISSION BY OPTICAL NODES IN AN OPTICAL NETWORK

(51) International classification :H04J3/16,H04B10/207,H04J14/02
(31) Priority Document No :12/760,870
(32) Priority Date :15/04/2010
(33) Name of priority country :U.S.A.
(86) International Application No :PCT/US2011/031073
Filing Date :04/04/2011
(87) International Publication No :WO/2011/130036
(61) Patent of Addition to Application Number :NA
Filing Date :NA
(62) Divisional to Application Number :NA
Filing Date :NA

(71)**Name of Applicant :**
1)ALCATEL LUCENT
Address of Applicant :3 Avenue Octave Greard 75007 Paris France
(72)**Name of Inventor :**
1)DOUTJE T. VAN VEEN
2)ADRIAAN J. DE LIND VAN WIJNGAARDEN
3)DUSAN SUVAKOVIC

(57) Abstract :
A signal strength corresponding to an incoming optical burst from each of a plurality of optical nodes is measured. The measurements can be performed at system start-up, configuration/installation of the optical nodes and/or at certain intervals of operation of the optical nodes. Signal strength information for the optical nodes based on the measurements is stored in memory. When scheduling the optical nodes for transmission, a preferred transmission order is determined in response to the stored signal strength information. In an embodiment, the preferred order is determined to reduce differences in signal strength levels between consecutive optical bursts.

No. of Pages : 32 No. of Claims : 12

(12) PATENT APPLICATION PUBLICATION
(19) INDIA
(22) Date of filing of Application :22/10/2012
(21) Application No.9030/CHENP/2012 A
(43) Publication Date : 19/12/2014

(54) Title of the invention : NOISE-CANCELING FOR DIFFERENTIAL AMPLIFIERS REQUIRING NO EXTERNAL MATCHING

(51) International classification :H03F3/189,H03F3/30
(31) Priority Document No :12/772,924
(32) Priority Date :03/05/2010
(33) Name of priority country :U.S.A.
(86) International Application No :PCT/US2011/035067
Filing Date :03/05/2011
(87) International Publication No :WO/2011/140145
(61) Patent of Addition to Application Number :NA
Filing Date :NA
(62) Divisional to Application Number :NA
Filing Date :NA

(71)**Name of Applicant :**
1)QUALCOMM INCORPORATED
Address of Applicant :Attn: International IP Administration 5775 Morehouse Drive San Diego California 92121 U.S.A.
(72)**Name of Inventor :**
1)MANAS BEHERA
2)HARISH S. MUTHALI
3)KENNETH CHARLES BARNETT

(57) Abstract :
A differential Low Noise Amplifier (LNA) includes a first stage of resistive feedback amplifiers and second stage of complementary amplifiers, where the outputs of the first stage are coupled to the inputs of the second stage in a cross-coupled fashion. An inductive load, such as a transformer, combines signals output from the complementary amplifiers of the second stage. In one example, the LNA has an input impedance of less than 75 ohms, a noise factor of less than 2 dB, and a gain of more than 20 dB. Due to the low input impedance, the LNA is usable to amplify a signal received from a source having a similar low impedance without the use of an impedance matching network between the output of the source and the input of the LNA.

No. of Pages : 29 No. of Claims : 21

(12) PATENT APPLICATION PUBLICATION
(19) INDIA
(22) Date of filing of Application :10/12/2013
(21) Application No.9845/CHENP/2013 A
(43) Publication Date : 19/12/2014

(54) Title of the invention : METHODS AND APPARATUS FOR USING A LAYERED GEAR TO ANALYZE AND MANAGE REAL TIME NETWORK QUALITY OF SERVICE TRANSMISSION FOR MOBILE DEVICES ON PUBLIC NETWORKS

(51) International classification :H04L1/00
(31) Priority Document No :61/494863
(32) Priority Date :08/06/2011
(33) Name of priority country :U.S.A.
(86) International Application No :PCT/US2012/041776
Filing Date :08/06/2012
(87) International Publication No :WO 2012/170968
(61) Patent of Addition to Application Number :NA
Filing Date :NA
(62) Divisional to Application Number :NA
Filing Date :NA

(71)**Name of Applicant :**
1)FRAMEHAWK INC.
Address of Applicant :118 2nd Street 3rd Floor San Francisco CA 94105 U.S.A.
(72)**Name of Inventor :**
1)VILKE Stephen D
2)WILLIS Rudy
3)SELVIDGE James
4)HINKS Paul

(57) Abstract :
Methods and apparatus for providing layered gear mechanism to analyze network loss and latency conditions includes bundling data into data packets of varying depths at a source with data packets of each depth belonging to a particular data type. The data packets of varying depths are transmitted in layers over a network to a destination. Information for the transmitted data packets for each layer is collected constantly and analyzed as the data progresses along the network to identify corresponding network transmission characteristics. The transmission of subsequent data packets for anyone of the layers is adjusted based on the network transmission characteristics. The adjusting is repeated one or more times based on the analyzed information for the transmitted data packets. The transition metrics for each layer is utilized for relative analysis of transmission metrics across the layers to set the adjusting.

No. of Pages : 38 No. of Claims : 25

(12) PATENT APPLICATION PUBLICATION
(19) INDIA
(22) Date of filing of Application :22/11/2012
(21) Application No.9848/CHENP/2012 A
(43) Publication Date : 19/12/2014

(54) Title of the invention : RESOURCE AVAILABILITY FOR PHYSICAL DOWNLINK SHARED CHANNEL (PDSCH) IN RELAY BACKHAUL TRANSMISSIONS

(51) International classification :H04W72/12,H04L5/00
(31) Priority Document No :61/330,846
(32) Priority Date :03/05/2010
(33) Name of priority country :U.S.A.
(86) International Application No :PCT/US2011/035061
Filing Date :03/05/2011
(87) International Publication No :WO/2011/140139
(61) Patent of Addition to Application Number :NA
Filing Date :NA
(62) Divisional to Application Number :NA
Filing Date :NA

(71)**Name of Applicant :**
1)QUALCOMM INCORPORATED
Address of Applicant :ATTN: International IP Administration 5775 Morehouse Drive San Diego California 92121-1714 U.S.A.
(72)**Name of Inventor :**
1)WANSHI CHEN
2)JUAN MONTOJO
3)ALEKSANDAR DAMNJANOVIC

(57) Abstract :
Certain aspects of the present disclosure provide techniques for indicating (e.g., by a donor base station) resources available for physical downlink shared channel (PDSCH) transmissions from a base station is provided. Certain aspects of the present disclosure provide techniques for determining (e.g., by a relay node or UE) resources available for physical downlink shared channel (PDSCH) transmissions from a base station.

No. of Pages : 43 No. of Claims : 52

(12) PATENT APPLICATION PUBLICATION
(19) INDIA
(22) Date of filing of Application :22/11/2012
(21) Application No.9849/CHENP/2012 A
(43) Publication Date : 19/12/2014

(54) Title of the invention : MEMORY DEVICE HAVING A LOCAL CURRENT SINK

(51) International classification :G11C11/16,G11C13/00,G11C29/02
(31) Priority Document No :12/778,337
(32) Priority Date :12/05/2010
(33) Name of priority country:U.S.A.
(86) International Application No :PCT/US2011/035928
Filing Date :10/05/2011
(87) International Publication No :WO/2011/143221
(61) Patent of Addition to Application Number :NA
Filing Date :NA
(62) Divisional to Application Number :NA
Filing Date :NA

(71)**Name of Applicant :**
1)QUALCOMM INCORPORATED
Address of Applicant :ATTN: International IP Administration 5775 Morehouse Drive San Diego California 92121-1714 U.S.A.
(72)**Name of Inventor :**
1)JUNG PILL KIM
2)HARI M RAO

(57) Abstract :
A memory device having a local current sink is disclosed. In a particular embodiment, an electronic device is disclosed. The electronic device includes one or more write drivers. The electronic device includes at least one Magnetic Tunnel Junction (MTJ) coupled to a bit line and coupled to a source line. The electronic device also includes a current sink circuit comprising a single transistor, the single transistor coupled to the bit line and to the source line.

No. of Pages : 36 No. of Claims : 46

(12) PATENT APPLICATION PUBLICATION
(19) INDIA
(22) Date of filing of Application :24/01/2013
(21) Application No.581/CHENP/2013 A
(43) Publication Date : 19/12/2014

(54) Title of the invention : AC CONVERSION CIRCUIT AC CONVERSION METHOD AND RECORDING MEDIUM

(51) International classification :H02M5/297,H02M5/293
(31) Priority Document No :2011118293
(32) Priority Date :26/05/2011
(33) Name of priority country :Japan
(86) International Application No :PCT/JP2011/006195
Filing Date :07/11/2011
(87) International Publication No :WO 2012/160615
(61) Patent of Addition to Application Number :NA
Filing Date :NA
(62) Divisional to Application Number :NA
Filing Date :NA

(71)**Name of Applicant :**
1)PANASONIC CORPORATION
Address of Applicant :1006 Oaza Kadoma Kadoma shi Osaka 5718501 Japan
(72)**Name of Inventor :**
1)YAMAMOTO Hiroshi
2)SADA Tomokazu
3)ITOH Junichi

(57) Abstract :
This AC conversion circuit converts a single phase AC input voltage with a frequency f0 into a three phase AC output voltage with a frequency f1 which is lower than the frequency f0. This AC conversion circuit is provided with: a switching unit (101) which converts the AC input voltage on the basis of a control signal and outputs the converted voltage to a phase selected on the basis of the control signal; a filter unit (104) which converts the converted voltage to the AC output voltage by eliminating the high frequency component of the converted voltage; and a switching control unit (103) which synchronizes to a timing at which the AC input voltage is 0 and carries out pulse density modulation on the basis of a reference signal that corresponds to the AC output voltage of each phase generates a control signal on the basis of the generation status of the pulse due to pulse density modulation and the polarity of the AC input voltage and transmits the control signal to the switching unit (101).

No. of Pages : 76 No. of Claims : 13

(12) PATENT APPLICATION PUBLICATION
(19) INDIA
(22) Date of filing of Application :24/01/2014
(21) Application No.601/CHENP/2014 A
(43) Publication Date : 19/12/2014

(54) Title of the invention : SEALING DEVICE

(51) International classification :B65B51/10
(31) Priority Document No :2011159062
(32) Priority Date :20/07/2011
(33) Name of priority country :Japan
(86) International Application No :PCT/JP2012/065746
Filing Date :20/06/2012
(87) International Publication No :WO 2013/011794
(61) Patent of Addition to Application Number :NA
Filing Date :NA
(62) Divisional to Application Number :NA
Filing Date :NA

(71)**Name of Applicant :**
1)FUJI IMPULSE CO. LTD.
Address of Applicant :4 23 18 Shonai Sakaemachi Toyonaka shi Osaka 5610834 Japan
(72)**Name of Inventor :**
1)YAMADAKazukuni
2)TARUMOTOKazuyoshi
3)HASHIMOTOYasuo
4)KAWAGUCHIJunichi
5)AKIYAMASuguru

(57) Abstract :
The present invention provides a sealing device which can perform a two stage pinching operation using a direct acting solenoid. The sealing device is provided with a stop mechanism for moving a nozzle from a standby position to a stop position when the direct acting solenoid is driven after which the movement of a mobile part of the direct acting solenoid is stopped at a predetermined intermediate position between a start point and an end point and after the nozzle part has been returned from the stop position to the standby position stoppage of the movement of the mobile part is cancelled and the mobile part is once again allowed to move to the end point.

No. of Pages : 55 No. of Claims : 10

(12) PATENT APPLICATION PUBLICATION
(19) INDIA
(22) Date of filing of Application :31/10/2012
(21) Application No.9259/CHENP/2012 A
(43) Publication Date : 19/12/2014

(54) Title of the invention : MALICIOUS ATTACK DETECTION AND ANALYSIS

(51) International classification :G06F11/00
(31) Priority Document No :61/346,787
(32) Priority Date :20/05/2010
(33) Name of priority country :U.S.A.
(86) International Application No :PCT/US2011/035888
Filing Date :10/05/2011
(87) International Publication No :WO/2011/146284
(61) Patent of Addition to Application Number :NA
Filing Date :NA
(62) Divisional to Application Number :NA
Filing Date :NA

(71)**Name of Applicant :**
1)Accenture Global Services Limited
Address of Applicant :3 Grand Canal Plaza Grand Canal Street Upper Dublin 4 IRELAND
(72)**Name of Inventor :**
1)SCOTT Anthony David

(57) Abstract :
A system for characterizing malicious activity in an intelligent utility grid system includes a system storage which stores a database including a plurality of rules. A collector collects and store sin the system storage information-technology (IT) data including IT-related activity from the intelligent grid system. A complex event processing (CEP) bus receiving non-IT data including location-specific event data from a plurality of electronic sources, the CEP bus disregarding the non-IT data failing to meet a predetermined level of relevance to one of a plurality of risk-related events. A processor applies the plurality of rules to the relevant non-IT data to: associate an undesired event with reference to the IT -related activity; and determine a probability that the undesired event is indicative of malicious activity. The processor further applies a risk characterization to the undesired event based on the probability and the IT-related activity.

No. of Pages : 106 No. of Claims : 24

(12) PATENT APPLICATION PUBLICATION
(19) INDIA
(22) Date of filing of Application :23/11/2012
(21) Application No.9910/CHENP/2012 A
(43) Publication Date : 19/12/2014

(54) Title of the invention : METHODS AND APPARATUS FOR USE IN AN OPENFLOW NETWORK

(51) International classification :H04L12/24,H04L12/26
(31) Priority Document No :61/346,227
(32) Priority Date :19/05/2010
(33) Name of priority country :U.S.A.
(86) International Application No :PCT/EP2011/057498
Filing Date :10/05/2011
(87) International Publication No :WO/2011/144495
(61) Patent of Addition to Application Number :NA
Filing Date :NA
(62) Divisional to Application Number :NA
Filing Date :NA

(71)**Name of Applicant :**
1)TELEFONAKTIEBOLAGET LM ERICSSON (PUBL)
Address of Applicant :SE-164 83 Stockholm Sweden
(72)**Name of Inventor :**
1)BELLAGAMBA Elisa
2)KEMPF James
3)SK–LDSTR–M Pontus

(57) Abstract :
According to a first aspect of the present invention there is provided an apparatus configured to operate as an OpenFlow switch (1). The apparatus comprises a transmitter for periodically sending outgoing link failure detection packets on one or more links each link being used to carry traffic to a peer OpenFlow switch a receiver for receiving incoming link failure detection packets over the one or more links from each peer OpenFlow switch a link failure detection unit (7) for monitoring the reception of incoming link failure detection packets and for determining that a link has failed if incoming link failure detection packets have not been received on that link for a predefined interval and a link failover unit (8) for redirecting traffic intended for a failed link to a backup link....

No. of Pages : 32 No. of Claims : 27

(12) PATENT APPLICATION PUBLICATION
(19) INDIA
(22) Date of filing of Application :02/12/2013
(21) Application No.9634/CHENP/2013 A
(43) Publication Date : 19/12/2014

(54) Title of the invention : METHODS AND APPARATUS FOR MULTI SOURCE RESTORE

(51) International classification :G06F11/14
(31) Priority Document No :61/493360
(32) Priority Date :03/06/2011
(33) Name of priority country :U.S.A.
(86) International Application No :PCT/US2012/039013
Filing Date :22/05/2012
(87) International Publication No :WO 2012/166443
(61) Patent of Addition to Application Number :NA
Filing Date :NA
(62) Divisional to Application Number :NA
Filing Date :NA

(71)**Name of Applicant :**
1)APPLE INC.
Address of Applicant :1 Infinite Loop Cupertino CA 95014 U.S.A.
(72)**Name of Inventor :**
1)SCHMIDT Edward T.
2)FREEDMAN Gordon J.
3)FARKAS Jacob C.
4)MCNEIL Kenneth B.

(57) Abstract :
Methods and apparatus that restore a resource from a first source and a second source to a device are described. Availability of the resource from a second source may be dynamically determined after a portion of the resource has been restored to the device from the first source. If the second source is determined to be more efficiently connected with the device than the first source a remaining portion of the resource may be restored from the second source to the device after the portion of the resource has been restored to the device.

No. of Pages : 48 No. of Claims : 23

(12) PATENT APPLICATION PUBLICATION
(19) INDIA
(22) Date of filing of Application :10/12/2013
(21) Application No.9855/CHENP/2013 A
(43) Publication Date : 19/12/2014

(54) Title of the invention : DRUG DELIVERY SYSTEM

(51) International classification :A61K9/28,A61K9/20,A61K31/519
(31) Priority Document No :11166091.6
(32) Priority Date :13/05/2011
(33) Name of priority country :EPO
(86) International Application No :PCT/NL2012/050336
Filing Date :14/05/2012
(87) International Publication No :WO 2012/158030
(61) Patent of Addition to Application Number :NA
Filing Date :NA
(62) Divisional to Application Number :NA
Filing Date :NA

(71)**Name of Applicant :**
1)EMOTIONAL BRAIN B.V.
Address of Applicant :Louis Armstrongweg 78 NL 1311 RL Almere Netherlands
(72)**Name of Inventor :**
1)BLOEMERS Johannes Martinus Maria
2)EISSENS Anko Cornelus
3)FRIJLINK Henderik Willem
4)DE LEEDE Leonardus Gerardus Jozef

(57) Abstract :
The invention relates to a time controlled immediate release drug delivery system for oral administration of a first active ingredient to a subject in need thereof. The invention additionally relates to a dual drug delivery device comprising the time controlled immediate release drug delivery system according to the invention further comprising a second coating comprising a second active ingredient.

No. of Pages : 118 No. of Claims : 39

(12) PATENT APPLICATION PUBLICATION
(19) INDIA
(22) Date of filing of Application :11/12/2013
(21) Application No.9856/CHENP/2013 A
(43) Publication Date : 19/12/2014

(54) Title of the invention : INTELLIGENT PARENTAL CONTROLS FOR WIRELESS DEVICES

(51) International classification :H04M1/66
(31) Priority Document No :13/182161
(32) Priority Date :13/07/2011
(33) Name of priority country :U.S.A.
(86) International Application No :PCT/US2012/046803
Filing Date :13/07/2012
(87) International Publication No :WO 2013/010147
(61) Patent of Addition to Application Number :NA
Filing Date :NA
(62) Divisional to Application Number :NA
Filing Date :NA

(71)**Name of Applicant :**
1)QUALCOMM INCORPORATED
Address of Applicant :ATTN: INTERNATIONAL IP ADMINISTRATION 5775 Morehouse Drive San Diego California 92121 U.S.A.
(72)**Name of Inventor :**
1)SPRIGG Stephen A.
2)SWART Hugo
3)JAMES Michael

(57) Abstract :
Methods systems and devices for controlling mobile device functions via a combination of parental control settings set by a parent user and parental control settings set by a third party user. A parental control server receives parental control settings and context criteria from a parent user and parental control settings from a third party user. The parental control server receives authorization from the parent user to allow third party parental controls to control a child s device. When the context criteria identified by the parent is present (e.g. child device is in identified location time of day day of week etc.) a combination of parental controls designated by the parent user and the third party control the mobile device.

No. of Pages : 86 No. of Claims : 132

(12) PATENT APPLICATION PUBLICATION
(19) INDIA
(22) Date of filing of Application :11/12/2013
(21) Application No.9857/CHENP/2013 A
(43) Publication Date : 19/12/2014

(54) Title of the invention : MODULAR DISPENSING SYSTEM

(51) International classification :B67C
(31) Priority Document No :13/116247
(32) Priority Date :26/05/2011
(33) Name of priority country :U.S.A.
(86) International Application No :PCT/US2012/036116
Filing Date :02/05/2012
(87) International Publication No :WO 2012/161935
(61) Patent of Addition to Application Number :NA
Filing Date :NA
(62) Divisional to Application Number :NA
Filing Date :NA

(71)**Name of Applicant :**
1)PEPSICO INC.
Address of Applicant :700 Anderson Hill Road Purchase NY 10577 U.S.A.
(72)**Name of Inventor :**
1)JERSEY Steven T.
2)SEGIET William W.
3)SIEGEL Tom
4)KALI Eddie
5)BOGGS Joseph
6)BALSTAD Robert

(57) Abstract :
The disclosure concerns a system including a modular dispensing system at least one dispensing head at a counter a transfer unit located remotely from the counter and piping including multiple pipes extending from the transfer unit to the counter. In one aspect the transfer unit comprises a centralized flavor ingredient system having a plurality of beverage flavor ingredient sources and the piping comprises a main micro bundle.

No. of Pages : 35 No. of Claims : 20

(12) PATENT APPLICATION PUBLICATION
(19) INDIA
(22) Date of filing of Application :12/12/2013
(21) Application No.9863/CHENP/2013 A
(43) Publication Date : 19/12/2014

(54) Title of the invention : MULTIPORT ETHERNET INTERFACE DEVICE AND VPN SERVICE ACCESS METHOD THEREFOR

(51) International classification :H04L12/56
(31) Priority Document No :201110122377.0
(32) Priority Date :12/05/2011
(33) Name of priority country :China
(86) International Application No :PCT/CN2012/074680
Filing Date :25/04/2012
(87) International Publication No :WO 2012/152186
(61) Patent of Addition to Application Number :NA
Filing Date :NA
(62) Divisional to Application Number :NA
Filing Date :NA

(71)**Name of Applicant :**
1)ZTE CORPORATION
Address of Applicant :ZTE Plaza Keji Road South Hi Tech Industrial Park Nanshan Shenzhen Guangdong 518057 China
(72)**Name of Inventor :**
1)WANG Jisheng

(57) Abstract :
Disclosed is a VPN service access method for a multiport Ethernet interface device comprising: the multiport Ethernet interface device acquiring a corresponding internal control VLAN on the basis of information of a VPN service access scheme of in port information of a VPN service packet and of a preset mapping table; writing the internal control VLAN into the VPN service packet; transmitting the VPN service packet having written therein the internal control VLAN to a switch chip or an NP of a network device thereby allowing the switch chip or the NP to access the VPN service on the basis of the internal control VLAN and of a cascade port; and the cascade port is a port of the switch chip or of the NP corresponding to the multiport Ethernet interface device. Also provided in the present invention is a corresponding device. The multiport Ethernet interface device and the VPN service access method therefor provided in the present invention allow VPN service access for the multiport Ethernet interface device.

No. of Pages : 22 No. of Claims : 11

(12) PATENT APPLICATION PUBLICATION
(19) INDIA
(22) Date of filing of Application :23/11/2012
(21) Application No.9879/CHENP/2012 A
(43) Publication Date : 19/12/2014

(54) Title of the invention : ALMANAC MAINTENANCE FOR MOBILE STATION POSITIONING

(51) International classification :G01S5/02,G01S19/05,G01S19/27
(31) Priority Document No :12/789,926
(32) Priority Date :28/05/2010
(33) Name of priority country :U.S.A.
(86) International Application No :PCT/US2011/037389
Filing Date :20/05/2011
(87) International Publication No :WO/2011/149781
(61) Patent of Addition to Application Number :NA
Filing Date :NA
(62) Divisional to Application Number :NA
Filing Date :NA

(71)**Name of Applicant :**
1)QUALCOMM INCORPORATED
Address of Applicant :Attn: International IP Administration 5775 Morehouse Drive San Diego California 92121-1714 United States of America
(72)**Name of Inventor :**
1)MARSHALL Grant Alexander
2)MOEGLEIN Mark Leo

(57) Abstract :
An almanac data management system at a location remote from a cell phone (20) has an almanac memory (44) for containing at least a current version of almanac data (52). A mobile device information memory (48) contains an identification of a version of almanac data held by the cell phone (20). A downloading system (56) selectively downloads at least a subset of the current version of almanac data (52) to the cell phone (20) if the current version of almanac data (52) is later than the version of almanac data held by the cell phone (20).

No. of Pages : 31 No. of Claims : 52

(12) PATENT APPLICATION PUBLICATION
(19) INDIA
(22) Date of filing of Application :23/11/2012
(21) Application No.9881/CHENP/2012 A
(43) Publication Date : 19/12/2014

(54) Title of the invention : PRE-FETCHING INFORMATION BASED ON GESTURE AND/OR LOCATION

(51) International classification :H04W4/02,G06F1/16,H04M1/725
(31) Priority Document No :12/813,347
(32) Priority Date :10/06/2010
(33) Name of priority country :U.S.A.
(86) International Application No :PCT/US2011/040093
Filing Date :10/06/2011
(87) International Publication No :WO/2011/156789
(61) Patent of Addition to Application Number :NA
Filing Date :NA
(62) Divisional to Application Number :NA
Filing Date :NA

(71)**Name of Applicant :**
1)QUALCOMM INCORPORATED
Address of Applicant :Attn: International IP Administration 5775 Morehouse Drive San Diego California 92121-1714 United States of America
(72)**Name of Inventor :**
1)FORUTANPOUR Babak
2)MOMEYER Brian

(57) Abstract :
Example methods apparatuses and articles of manufacture are disclosed that may be utilized to pre- fetch and/or obtain information for use with mobile devices based at least in part on a gesture of a user and/or location of a mobile device. By way of example a method may include detecting an arrival of a mobile device at a location; and pre - fetching in response to the detection of the arrival information in connection with executing one or more applications and/or functions on the mobile device.

No. of Pages : 85 No. of Claims : 62

(12) PATENT APPLICATION PUBLICATION
(19) INDIA
(22) Date of filing of Application :23/11/2012
(21) Application No.9882/CHENP/2012 A
(43) Publication Date : 19/12/2014

(54) Title of the invention : STEREOSCOPIC DISPLAY APPARATUS AND METHOD OF DRIVING THE SAME

(51) International classification :G09G3/36,G02B27/22,H04N13/00
(31) Priority Document No :61/347,969
(32) Priority Date :25/05/2010
(33) Name of priority country :U.S.A.
(86) International Application No :PCT/KR2011/003829
Filing Date :25/05/2011
(87) International Publication No : WO/2011/149266
(61) Patent of Addition to Application Number :NA
Filing Date :NA
(62) Divisional to Application Number :NA
Filing Date :NA

(71)**Name of Applicant :**
1)SAMSUNG ELECTRONICS CO. LTD.
Address of Applicant :129 Samsung-ro Yeongtong-gu Suwon-si Gyeonggi-do 443-742 Republic of Korea.
(72)**Name of Inventor :**
1)LEE Ho-Seop
2)KIM Dae-Sik
3)CHA Kyung-Hoon
4)JUNG Jong-Hoon
5)KO Young-Ji

(57) Abstract :
A stereoscopic display apparatus is provided. The display apparatus includes a display panel for scanning an image alternately at a first frame frequency and a second frame frequency different from the first frame frequency an image signal input unit for inputting an image signal to the display panel a backlight unit for emitting light to the display panel and a shutter controller for selectively controlling an opening and closing of a left eye shutter and a right eye shutter of shutter glasses.

No. of Pages : 31 No. of Claims : 15

(12) PATENT APPLICATION PUBLICATION
(19) INDIA
(22) Date of filing of Application :23/11/2012
(21) Application No.9885/CHENP/2012 A
(43) Publication Date : 19/12/2014

(54) Title of the invention : METHODS AND SYSTEMS FOR SRS POWER SCALING IN CARRIER AGGREGATION

(51) International classification :H04W52/28,H04W52/34,H04W52/36
(31) Priority Document No :61/331,769
(32) Priority Date :05/05/2010
(33) Name of priority country :U.S.A.
(86) International Application No :PCT/US2011/035400
Filing Date :05/05/2011
(87) International Publication No :WO/2011/140373
(61) Patent of Addition to Application Number :NA
Filing Date :NA
(62) Divisional to Application Number :NA
Filing Date :NA

(71)**Name of Applicant :**
1)QUALCOMM INCORPORATED
Address of Applicant :ATTN: International IP Administration 5775 Morehouse Drive San Diego California 92121-1714 U.S.A.
(72)**Name of Inventor :**
1)TAO LUO
2)WANSHI CHEN
3)JUAN MONTOJO

(57) Abstract :
Certain aspects of the present disclosure relate to techniques for scaling transmission power. According to certain aspects, a technique for scaling transmission power may include scaling transmission power of one or more uplink channel symbols to be transmitted in a subframe, utilizing a first set of one or more scaling coefficients, scaling transmission power of one or more sounding reference signal (SRS) symbols to be transmitted in the same subframe, utilizing a second set of one or more scaling coefficients, wherein the first set of scaling coefficients is different from the second set of scaling coefficients, and transmitting the scaled one or more uplink channel symbols and the scaled one or more SRS symbols utilizing the scaled transmission power values

No. of Pages : 43 No. of Claims : 37

(12) PATENT APPLICATION PUBLICATION
(19) INDIA
(22) Date of filing of Application :23/11/2012
(21) Application No.9887/CHENP/2012 A
(43) Publication Date : 19/12/2014

(54) Title of the invention : INFORMATION PROCESSING APPARATUS AND METHOD AND PROGRAM

(51) International classification :G06F3/033,G06F3/023
(31) Priority Document No :2010-125967
(32) Priority Date :01/06/2010
(33) Name of priority country :Japan
(86) International Application No :PCT/JP2011/002913
Filing Date :25/05/2011
(87) International Publication No :WO/2011/151997
(61) Patent of Addition to Application Number :NA
Filing Date :NA
(62) Divisional to Application Number :NA
Filing Date :NA

(71)**Name of Applicant :**
1)SONY CORPORATION
Address of Applicant :1-7-1 Konan Minato-ku Tokyo 108-0075 Japan
(72)**Name of Inventor :**
1)SAYAKA WATANABE

(57) Abstract :
An apparatus and method provide logic for providing gestural control. In one implementation, an apparatus includes a receiving unit configured to receive a first spatial position associated with a first portion of a human body, and a second spatial position associated with a second portion of the human body. An identification unit is configured to identify a group of objects based on at least the first spatial position, and a selection unit is configured to select an object of the identified group based on the second spatial position.

No. of Pages : 45 No. of Claims : 21

(12) PATENT APPLICATION PUBLICATION
(19) INDIA
(22) Date of filing of Application :12/11/2012
(21) Application No.9573/CHENP/2012 A
(43) Publication Date : 19/12/2014

(54) Title of the invention : UNIQUELY IDENTIFYING TARGET FEMTOCELL TO FACILITATE FEMTO-ASSISTED ACTIVE HAND-IN

(51) International classification :H04W36/00,H04W60/06,H04W36/04
(31) Priority Document No :61/327,445
(32) Priority Date :23/04/2010
(33) Name of priority country :U.S.A.
(86) International Application No :PCT/US2011/033656
Filing Date :22/04/2011
(87) International Publication No :WO/2011/133926
(61) Patent of Addition to Application Number :NA
Filing Date :NA
(62) Divisional to Application Number :NA
Filing Date :NA

(71)**Name of Applicant :**
1)QUALCOMM INCORPORATED
Address of Applicant :Attn: International IP Administration 5775 Morehouse Drive San Diego California 92121-1714 U.S.A.
(72)**Name of Inventor :**
1)PEERAPOL TINNAKORNSRISUPHAP
2)SOUMYA DAS
3)RAVINDRA PATWARDHAN

(57) Abstract :
Systems, methods, devices, and computer program products are described for supporting macrocell-to-femtocell hand-ins of active macro communications for mobile access terminals. An out-of-band (OOB) link is used to detect that an access terminal is in proximity of a femtocell (e.g., using an OOB radio integrated with the femtocell or in a common subnet with the femtocell). Having detected the access terminal in proximity to the femtocell, an OOB presence indication is communicated to a femto convergence system disposed in a core network in communication with the macro network to effectively pre-register the access terminal with the femto-convergence system. When the femto convergence system receives a handoff request from the macro network implicating the pre-registered access terminal, it is able to reliably determine the appropriate target femtocell to use for the hand-in according to the pre-registration, even where identification of the appropriate target femtocell would otherwise be unreliable.

No. of Pages : 113 No. of Claims : 75

(12) PATENT APPLICATION PUBLICATION
(19) INDIA
(22) Date of filing of Application :28/11/2013
(21) Application No.9573/CHENP/2013 A
(43) Publication Date : 19/12/2014

(54) Title of the invention : CONNECTORS MANUFACTURED BY THREE DIMENSIONAL PRINTING

(51) International classification :F16L37/00,B29C67/00
(31) Priority Document No :61/492498
(32) Priority Date :02/06/2011
(33) Name of priority country :U.S.A.
(86) International Application No :PCT/US2012/039432
Filing Date :24/05/2012
(87) International Publication No :WO 2012/166546
(61) Patent of Addition to Application Number :NA
Filing Date :NA
(62) Divisional to Application Number :NA
Filing Date :NA

(71)**Name of Applicant :**
1)A. RAYMOND ET CIE
Address of Applicant :115 Cours Berriat F 38000 Grenoble France
(72)**Name of Inventor :**
1)HEMINGWAY Todd L.
2)JACKSON Nicholas

(57) Abstract :
A hollow conduit is provided. In another aspect a quick connector suitable to carry fluid therethrough is made of layers of material a light curable material and/or multiple built up materials. Another aspect uses a three dimensional printing machine to emit material from an ink jet printing head to build up a conduit.

No. of Pages : 27 No. of Claims : 66

(12) PATENT APPLICATION PUBLICATION
(19) INDIA
(22) Date of filing of Application :12/11/2012
(21) Application No.9574/CHENP/2012 A
(43) Publication Date : 19/12/2014

(54) Title of the invention : WIRELESS POWER DISTRIBUTION AMONG A PLURALITY OF RECEIVERS

(51) International classification :H02J7/02,H02J7/00
(31) Priority Document No :61/327,532
(32) Priority Date :23/04/2010
(33) Name of priority country :U.S.A.
(86) International Application No :PCT/US2011/033672
Filing Date :22/04/2011
(87) International Publication No :WO/2011/133936
(61) Patent of Addition to Application Number :NA
Filing Date :NA
(62) Divisional to Application Number :NA
Filing Date :NA

(71)**Name of Applicant :**
1)QUALCOMM INCORPORATED
Address of Applicant :International IP Administration 5775 Morehouse Drive San Diego California 92121 U.S.A.
(72)**Name of Inventor :**
1)ZHEN NING LOW
2)CHARLES E. WHEATLEY III
3)WILLIAM H. VON NOVAK
4)SERGIO P. ESTRADA

(57) Abstract :
Exemplary embodiments are directed to power distribution among a plurality of receivers. A method may include requesting at least one receiver of a plurality of receivers within a charging region of a transmitter to modify an associated load resistance to achieve a desired power distribution among the plurality of receivers. The method may further include requesting each receiver of the plurality of receivers to modify an associated load resistance to achieve a desired total impedance as seen by the transmitter while maintaining the desired power distribution among the plurality of receivers.

No. of Pages : 37 No. of Claims : 25

(12) PATENT APPLICATION PUBLICATION
(19) INDIA
(22) Date of filing of Application :12/11/2012
(21) Application No.9578/CHENP/2012 A
(43) Publication Date : 19/12/2014

(54) Title of the invention : IMPROVED LOW TITANIUM DIOXIDE COATINGS

(51) International classification :C09D7/00,C09D7/12
(31) Priority Document No :61/328,383
(32) Priority Date :27/04/2010
(33) Name of priority country :U.S.A.
(86) International Application No :PCT/EP2011/056491
Filing Date :22/04/2011
(87) International Publication No :WO/2011/134907
(61) Patent of Addition to Application Number :NA
Filing Date :NA
(62) Divisional to Application Number :NA
Filing Date :NA

(71)**Name of Applicant :**
1)AKZO NOBEL COATINGS INTERNATIONAL B.V.
Address of Applicant :Velperweg 76 NL-6824 BM Arnhem The NETHERLANDS
(72)**Name of Inventor :**
1)WHEELER Stephen Arthur
2)BARCOCK Richard
3)PEARCE Colin
4)JEFFERSON Gary
5)WOODS Anthony David
6)EMMETT Simon Nicholas
7)PEREZ-AMOROS Javier

(57) Abstract :
An aqueous coating composition having a PVC of from 78 to 85% comprising based on the total volume solids of the dry coating unless otherwise stated a) opacifying pigment particles comprising: i) from 3 to 10% titanium dioxide ii) from 0 to 20% of hollow polymeric particles; b) non-opacifying extender particles comprising: i) calcium magnesium carbonate and/or ii) calcium carbonate and/or iii) nepheline syenite and/or iv) kaolin wherein i)+ii)+iii)+iv) = 40 to 80% and iv) is 0 to 20%; c) polymer binder particles of calculated Fox Tg of from 5 to 25°C having an acid value of from 15 to 65mg KOH/g of polymer and wherein the polymer particles are derived from acrylic monomers and optionally ....

No. of Pages : 38 No. of Claims : 21

(12) PATENT APPLICATION PUBLICATION
(19) INDIA
(22) Date of filing of Application :27/11/2012
(21) Application No.9970/CHENP/2012 A
(43) Publication Date : 19/12/2014

(54) Title of the invention : UPLINK POWER CONTROL IN AGGREGATED CARRIER COMMUNICATION SYSTEMS

(51) International classification :H04W52/34,H04W52/14,H04W52/32
(31) Priority Document No :61/332,612
(32) Priority Date :07/05/2010
(33) Name of priority country :U.S.A.
(86) International Application No :PCT/US2011/035625
Filing Date :06/05/2011
(87) International Publication No :WO/2011/140504
(61) Patent of Addition to Application Number :NA
Filing Date :NA
(62) Divisional to Application Number :NA
Filing Date :NA

(71)**Name of Applicant :**
1)QUALCOMM INCORPORATED
Address of Applicant :ATTN: International IP Administration 5775 Morehouse Drive San Diego California 92121-1714 U.S.A.
(72)**Name of Inventor :**
1)WANSHI CHEN
2)TAO LUO
3)JUAN MONTOJO

(57) Abstract :
A user equipment (UE) is configured for carrier aggregation in a wireless communication system. The UE decodes transmit power control commands from at least one downlink control channel for at least one uplink channel, where the at least one uplink channel is to be transmitted in a component carrier of a number of component carriers (401). The UE compares a commanded transmit power for the at least one uplink channel with a configured maximum transmit power of the component carrier (402) and transmits the at least one uplink channel in the component carrier (403).

No. of Pages : 58 No. of Claims : 65

(12) PATENT APPLICATION PUBLICATION
(19) INDIA
(22) Date of filing of Application :06/12/2013
(21) Application No.9761/CHENP/2013 A
(43) Publication Date : 19/12/2014

(54) Title of the invention : AMPLIFIER CIRCUIT AND WIRELESS COMMUNICATION DEVICE

(51) International classification :H03F1/32,H03F3/24,H04B1/04
(31) Priority Document No :2011108353
(32) Priority Date :13/05/2011
(33) Name of priority country :Japan
(86) International Application No :PCT/JP2012/052589
Filing Date :06/02/2012
(87) International Publication No :WO 2012/157296
(61) Patent of Addition to Application Number :NA
Filing Date :NA
(62) Divisional to Application Number :NA
Filing Date :NA

(71)**Name of Applicant :**
1)SUMITOMO ELECTRIC INDUSTRIES LTD.
Address of Applicant :5 33 Kitahama 4 chome Chuo ku Osaka shi Osaka 5410041 Japan
(72)**Name of Inventor :**
1)ONISHI Masahiko

(57) Abstract :
According to the present invention a quadrature modulation error can be compensated without providing an additional feedback loop for detecting the quadrature modulation error. An amplifier circuit is provided with: a quadrature modulator (33); an amplifier (2) for amplifying a quadrature modulated signal; a distortion compensation unit (4) for compensating the distortion of the amplifier using a first compensation coefficient; a quadrature modulation error compensation unit (9) for compensating a quadrature modulation error; an update unit (10b) for updating a second compensation coefficient for compensating the quadrature modulation error; an error estimation unit (10a) for estimating the error of the quadrature modulation error; and a prediction unit for calculating a prediction value of the output of the amplifier after the update of the second compensation coefficient. The second compensation coefficient is updated on the basis of the estimated error. The prediction value is calculated on the basis of the estimated error and the amplifier output. The distortion compensation unit (4) calculates the first compensation coefficient on the basis of the prediction value.

No. of Pages : 45 No. of Claims : 6

(12) PATENT APPLICATION PUBLICATION
(19) INDIA
(22) Date of filing of Application :23/12/2011
(21) Application No.9762/CHENP/2011 A
(43) Publication Date : 19/12/2014

(54) Title of the invention : DIKETOPYRROLOPYRROLE POLYMERS FOR USE IN ORGANIC SEMICONDUCTOR DEVICES

(51) International classification :C08G73/00
(31) Priority Document No :09161243.2
(32) Priority Date :27/05/2009
(33) Name of priority country :EPO
(86) International Application No :PCT/EP2010/056778
Filing Date :18/05/2010
(87) International Publication No :WO 2010/136353 A1
(61) Patent of Addition to Application Number :NA
Filing Date :NA
(62) Divisional to Application Number :NA
Filing Date :NA

(71)**Name of Applicant :**
1)BASF SE
Address of Applicant :67056, LUDWIGSHAFEN Germany
(72)**Name of Inventor :**
1)DUGGELI, MATHIAS
2)AEBISCHER, OLIVIER, FREDERIC
3)HAYOZ, PASCAL
4)FONRODONA TURON, MARTA
5)TURBIEZ, MATHIEU, G.R.
6)FLRES, JEAN-CHARLES
7)KIRNER, HANS, JURG
8)MURER, PETER
9)MURER, PETER
10)CHEBOTAREVA, NATALIA
11)SCHAFER, THOMAS

(57) Abstract :
The present invention relates to polymers comprising one or more (repeating) unit(s) of the formula A polymer, comprising (repeating) unit(s) of the formula and wherein A is a repeating unit of the formula (I). and-COM1-is a repeating unit of formula and their use as organic semiconductor in organic devices, especially in organic photovoltaics (solar cells) and photodiodes, or in a device containing a diode and/or an organic field effect transistor. The polymers according to the invention have excellent solubility in organic solvents and excellent film-forming properties, in addition, high efficiency of energy conversion, excellent field-effect mobility, good on/off current ratios and/or excellent stability can be observed, when the polymers according to the invention are used in organic field effect transistors, organic photovoltaics (solar cells) and photodiodes.

No. of Pages : 115 No. of Claims : 15

(12) PATENT APPLICATION PUBLICATION
(19) INDIA
(22) Date of filing of Application :12/12/2013
(21) Application No.9961/CHENP/2013 A
(43) Publication Date : 19/12/2014

(54) Title of the invention : METHOD FOR PRODUCING LAMINATED GLASS AND LAMINATED GLASS

(51) International classification :C03C27/12,B32B17/10,C03B23/025
(31) Priority Document No :2011136358
(32) Priority Date :20/06/2011
(33) Name of priority country :Japan
(86) International Application No :PCT/JP2012/065770
Filing Date :20/06/2012
(87) International Publication No :WO 2012/176813
(61) Patent of Addition to Application Number :NA
Filing Date :NA
(62) Divisional to Application Number :NA
Filing Date :NA

(71)**Name of Applicant :**
1)ASAHI GLASS COMPANY LIMITED
Address of Applicant :5 1 Marunouchi 1 chome Chiyoda ku Tokyo 1008405 Japan
(72)**Name of Inventor :**
1)KITAJIMA Yutaka

(57) Abstract :
Provided is a method for producing laminated glass by which glass plates and an interlayer are sufficiently pressure bonded even when two glass plates among a plurality of glass plates have different thicknesses thereby enabling reduction in the distortion of the glass plates and suppression of deterioration of an outer appearance. A method for producing laminated glass by bending and forming glass plates heated to around a softening point comprises a forming step of mounting a plurality of glass plates (2 4) stacked with a release agent therebetween on a ring die (20) and bending and forming the glass plates into a curved shape under the own weight thereof. In the forming step at least two glass plates among the plurality of glass plates (12 14) have different thicknesses the thickness of the thinnest glass plate (14) is less than 1.6 mm and the difference between the thickness of the thinnest glass plate (14) and the thickness of the thickest glass plate (12) is 0.5 mm or more and in the forming step the plurality of glass plates (2 4) are bended and formed while being mounted on the ring die (20) such that the glass plate having a thinner thickness is disposed in a lower position.

No. of Pages : 41 No. of Claims : 15

(12) PATENT APPLICATION PUBLICATION
(19) INDIA
(22) Date of filing of Application :26/12/2011
(21) Application No.9783/CHENP/2011 A
(43) Publication Date : 19/12/2014

(54) Title of the invention : OXAZOLIDINONE CONTAINING DIMER COMPOUNDS, COMPOSITIONS AND METHODS TO MAKE AND USE

(51) International classification :A61K31/675
(31) Priority Document No :61/181,955
(32) Priority Date :28/05/2009
(33) Name of priority country :U.S.A.
(86) International Application No :PCT/US2010/036283
Filing Date :27/05/2010
(87) International Publication No :WO 2010/138649 A1
(61) Patent of Addition to Application Number :NA
Filing Date :NA
(62) Divisional to Application Number :NA
Filing Date :NA

(71)**Name of Applicant :**
1)TRIUS THERAPEUTICS
Address of Applicant :6310 NANCY RIDGE DR., SUITE 101, SAN DIEGO, CA 92121 U.S.A.
(72)**Name of Inventor :**
1)HESTER, D., KEITH
2)DUGUID, ROBERT, J.
3)FINN, JOHN

(57) Abstract :
The disclosure [0102] Dosage forms or pharmaceutical compositions comprise a compound having the structure of Formula IV: Formula IV [0103] wherein n is a non-negative integer; wherein each Z is an oxazolidmone-containing moiety having antibiotic activity in vivo upon cleaving, wherein M is independently OR1 or NR1R2; wherein R1 and R2 are independently selected from the group consisting of H, an optionally-substituted hydrocarbyl residue or a pharmaceutically acceptable cation; wherein the compound in the dosage form or a pharmaceutical composition is present in an amount effective for treating or preventing an antibacterial infection in a mammalian subject. Methods of preparing and using these dosage forms or pharmaceutical compositions are also disclosed.

No. of Pages : 38 No. of Claims : 17

(12) PATENT APPLICATION PUBLICATION
(19) INDIA
(22) Date of filing of Application :09/12/2013
(21) Application No.9784/CHENP/2013 A
(43) Publication Date : 19/12/2014

(54) Title of the invention : BELL AND SPIGOT TYPE PIPING JOINT

(51) International classification :F16L
(31) Priority Document No :201210356608.9
(32) Priority Date :21/09/2012
(33) Name of priority country :China
(86) International Application No :PCT/CN2012/086359
Filing Date :11/12/2012
(87) International Publication No :WO 2014/044002
(61) Patent of Addition to Application Number :NA
Filing Date :NA
(62) Divisional to Application Number :NA
Filing Date :NA

(71)**Name of Applicant :**
1)XINXING DUCTILE IRON PIPES CO. LTD
Address of Applicant :Research Institute Xinxing Ductile Iron Pipes Industry Area Wuan Hebei 056300 China
(72)**Name of Inventor :**
1)ZHANG Tongbo
2)LI Jun
3)XU Jun
4)LIU Junfeng
5)DONG Jianzhong
6)ZHAO Fuen
7)LIU Zhili
8)WANG Yunfeng
9)KONG Guobin
10)JIA Qingbo

(57) Abstract :
Disclosed is a bell and spigot type piping joint comprising a bell (1) and a spigot (2) wherein an end of the bell (1) extends radially inwards to form an annular wall part (11) the outer wall at the near end of the spigot (2) is provided with a spigot solder ring (21) a blocking piece device (3) is provided between the bell (1) and the spigot (2) the blocking piece device (3) comprises a front blocking piece (31) and a rear blocking piece (32) the front end of the front blocking piece (31) is a front abutting end (311) and the rear end is a front fitting end (312) a first and a second front fitting face (313 314) are provided on the front fitting end (312) and the rear end of the rear blocking piece (32) is a rear abutting end (321) and the front end is a rear fitting end (322) a first and a second rear fitting face (323 324) are provided on the rear fitting end (322). Several front and rear blocking pieces (31 32) arranged alternately form a ring shape wherein the front abutting ends (311) of several front blocking pieces (31) abut against the annular wall part (11) of the bell (1) and the rear abutting ends (321) of several rear blocking pieces (32) abut against a spigot solder ring (21) of the spigot (2). The first and second front fitting faces (313 314) of each front blocking piece (31) respectively closely fit with the second and first rear fitting faces (324 323) of the rear blocking pieces (32) on both sides. The bell and spigot type piping joint can simplify manufacturing techniques reduce manufacturing costs and increase bearing strength.

No. of Pages : 20 No. of Claims : 14

(12) PATENT APPLICATION PUBLICATION
(19) INDIA
(22) Date of filing of Application :26/11/2012
(21) Application No.9963/CHENP/2012 A
(43) Publication Date : 19/12/2014

(54) Title of the invention : INNOVATIVE DISCOVERY OF THERAPEUTIC DIAGNOSTIC AND ANTIBODY COMPOSITIONS RELATED TO PROTEIN FRAGMENTS OF SERYL-TRNA SYNTHETASES

(51) International classification	:A61K39/395,A61K38/16,A61K38/43
(31) Priority Document No	:61/330,779
(32) Priority Date	:03/05/2010
(33) Name of priority country	:U.S.A.
(86) International Application No	:PCT/US2011/034840
Filing Date	:02/05/2011
(87) International Publication No	:WO/2011/139988
(61) Patent of Addition to Application Number	:NA
Filing Date	:NA
(62) Divisional to Application Number	:NA
Filing Date	:NA

(71)**Name of Applicant :**
1)ATYR PHARMA INC.
Address of Applicant :3545 John Hopkins Court Suite #250 San Diego CA 92121 United States of America
2)PANGU BIOPHARMA LIMITED
(72)**Name of Inventor :**
1)GREENE Leslie Ann
2)CHIANG Kyle P.
3)HONG Fei
4)VASSEROT Alain P.
5)LO Wing-Sze
6)WATKINS Jeffry D.
7)MENDLEIN John D.
8)QUINN Cheryl L.

(57) Abstract :
Provided are compositions comprising newly identified protein fragments of aminoacyl-tRNA synthetases polynucleotides that encode them and complements thereof related agents and methods of use thereof in diagnostic drug discovery research and therapeutic applications.

No. of Pages : 237 No. of Claims : 125

(12) PATENT APPLICATION PUBLICATION
(19) INDIA
(22) Date of filing of Application :26/11/2012
(21) Application No.9964/CHENP/2012 A
(43) Publication Date : 19/12/2014

(54) Title of the invention : INNOVATIVE DISCOVERY OF THERAPEUTIC DIAGNOSTIC AND ANTIBODY COMPOSITIONS RELATED TO PROTEIN FRAGMENTS OF ARGINYL-TRNA SYNTHETASES

(51) International classification :A61K39/395,A61K38/16,A61K38/43
(31) Priority Document No :61/330,790
(32) Priority Date :03/05/2010
(33) Name of priority country :U.S.A.
(86) International Application No :PCT/US2011/034838
Filing Date :02/05/2011
(87) International Publication No :WO/2011/139986
(61) Patent of Addition to Application Number :NA
Filing Date :NA
(62) Divisional to Application Number :NA
Filing Date :NA

(71)**Name of Applicant :**
1)ATYR PHARMA INC.
Address of Applicant :3545 John Hopkins Court Suite #250 San Diego CA 92121 United States of America
2)PANGU BIOPHARMA LIMITED
(72)**Name of Inventor :**
1)GREENE Leslie Ann
2)CHIANG Kyle P.
3)HONG Fei
4)VASSEROT Alain P.
5)LO Wing-Sze
6)WATKINS Jeffry D.
7)MENDLEIN John D.
8)QUINN Cheryl L.

(57) Abstract :
Provided are compositions comprising newly identified protein fragments of aminoacyl-tRNA synthetases polynucleotides that encode them and complements thereof related agents and methods of use thereof in diagnostic drug discovery research and therapeutic applications.

No. of Pages : 238 No. of Claims : 125

(12) PATENT APPLICATION PUBLICATION
(19) INDIA
(22) Date of filing of Application :13/12/2013
(21) Application No.9964/CHENP/2013 A
(43) Publication Date : 19/12/2014

(54) Title of the invention : DATA TRANSFER

(51) International classification :H04L12/46
(31) Priority Document No :1110009.6
(32) Priority Date :15/06/2011
(33) Name of priority country :U.K.
(86) International Application No :PCT/GB2012/051321
Filing Date :12/06/2012
(87) International Publication No :WO 2012/172319
(61) Patent of Addition to Application Number :NA
Filing Date :NA
(62) Divisional to Application Number :NA
Filing Date :NA

(71)**Name of Applicant :**
1)BAE SYSTEMS PLC
Address of Applicant :6 Carlton Gardens London SW1Y 5AD U.K.
(72)**Name of Inventor :**
1)FOUNTAIN James Graham
2)EISSA Rania Hamdi
3)HUDSON Peter Noble

(57) Abstract :
A data transfer method and system includes at least one switch device (102) configured in use to transfer data directly or indirectly between a plurality of computing devices (104).The at least one switch device is configured to provide a plurality of Virtual Local Area Networks (VLAN) each said VLAN being configured as a Virtual Channel (VC) by receiving data from a said computing device designated as a sole source of data over the VC.The VC data is transmitted from the sole source computing device as Ethernet frames (200) tagged with a VLAN tag (202).The VCs are routed through the at least one switch device according to a VLAN Id field of the VLAN tag of a said frame with fixed and pre determined routing of the frame being determined by configuration of the at least one switch device.

No. of Pages : 37 No. of Claims : 15

(12) PATENT APPLICATION PUBLICATION
(19) INDIA
(22) Date of filing of Application :13/12/2013
(21) Application No.9967/CHENP/2013 A
(43) Publication Date : 19/12/2014

(54) Title of the invention : RECIPROCATING REACTOR AND METHODS FOR THERMAL DECOMPOSITION OF CARBONACEOUS FEEDSTOCK

(51) International classification :B08B1/00,B08B1/04
(31) Priority Document No :61/486231
(32) Priority Date :14/05/2011
(33) Name of priority country :U.S.A.
(86) International Application No :PCT/US2012/037686
Filing Date :14/05/2012
(87) International Publication No :WO 2012/158579
(61) Patent of Addition to Application Number :NA
Filing Date :NA
(62) Divisional to Application Number :NA
Filing Date :NA

(71)**Name of Applicant :**
1)INTERRA ENERGY INC.
Address of Applicant :6456 Osler Street San Diego California 92111 U.S.A.
(72)**Name of Inventor :**
1)DEL MONTE Thomas
2)YAR Eren

(57) Abstract :
A continuous pyrolysis system has a feeder assembly and a reciprocating reactor assembly configured to receive carbonaceous feedstock and react it into product gases and product solids. The reactor has an inner reactor pipe an outer reactor pipe forming an annulus space and a turnaround zone. The inner reactor pipe acts as an inner reactor. A gas take off assembly is fluidly connected to the outer reactor zone formed by the annulus and is configured to remove product gases. A solids take off assembly is also fluidly connected to the outer reactor zone and a junction joins the feeder assembly to the reciprocating reactor assembly and the outer reactor zone to the gas off take assembly and the solids off take assembly.

No. of Pages : 32 No. of Claims : 16

(12) PATENT APPLICATION PUBLICATION
(19) INDIA
(22) Date of filing of Application :06/02/2013
(21) Application No.972/CHENP/2013 A
(43) Publication Date : 19/12/2014

(54) Title of the invention : FLEX ASSEMBLY OF PALLET BASE AND DECK

(51) International classification :B65D19/12
(31) Priority Document No :61/363950
(32) Priority Date :13/07/2010
(33) Name of priority country :U.S.A.
(86) International Application No :PCT/US2011/001225
Filing Date :13/07/2011
(87) International Publication No :WO 2012/009011
(61) Patent of Addition to Application Number :NA
Filing Date :NA
(62) Divisional to Application Number :NA
Filing Date :NA

(71)**Name of Applicant :**
1)A.R. ARENA PRODUCTS INC.
Address of Applicant :2101 Mt. Read Boulevard Rochester NY 14615 U.S.A.
(72)**Name of Inventor :**
1)WILCOX Donald E.
2)ARENA Charles S.

(57) Abstract :
Resin pallets having a deck and a base where the deck and base are joined by an interlock which is optionally reversible are described. Methods of making such pallets by assembling the pallets by interlocking parts to form the pallets in an optionally reversible method are also described.

No. of Pages : 62 No. of Claims : 27

(12) PATENT APPLICATION PUBLICATION
(19) INDIA
(22) Date of filing of Application :22/10/2012
(21) Application No.9066/CHENP/2012 A
(43) Publication Date : 19/12/2014

(54) Title of the invention : PROTEIN AND GENE BIOMARKERS FOR REJECTION OF ORGAN TRANSPLANTS

(51) International classification :C12Q1/68,G01N33/53
(31) Priority Document No :61/341,071
(32) Priority Date :25/03/2010
(33) Name of priority country :U.S.A.
(86) International Application No :PCT/US2011/030026
Filing Date :25/03/2011
(87) International Publication No : NA
(61) Patent of Addition to Application Number :NA
Filing Date :NA
(62) Divisional to Application Number :NA
Filing Date :NA

(71)**Name of Applicant :**
1)THE BOARD OF TRUSTEES OF THE LELAND STANFORD JUNIOR UNIVERSITY
Address of Applicant :1705 El Camino Real Palo Alto California 94306-1106 United States of America
(72)**Name of Inventor :**
1)SARWAL Minnie M.
2)LI Li
3)SIGDEL Tara
4)KAUSHAL Amit
5)XIAO Wenzhong
6)BUTTE Atul J.
7)KHATRI Purvesh

(57) Abstract :
Aspects of the present invention include methods for determining a transplant category of a subject having a transplant. Common mechanisms of rejection injury are uncovered across different tissue transplants and provide a means to understand rational drug design. Various sources of tissues are examined form the patient for understanding AR mechanism (graft biopsy) as well as monitoring by minimal invasive means (blood) or non-invasive means (urine for the kidney allograft). For biomarker discovery different categories of markers are examined such as genes proteins peptides and antibodies. These biomarkers can help determine the subjects transplant category (e.g. acute allograft rejection (AR) stable allograft (STA) BK viremia BK nephritis drug toxicity or chronic allograft injury (CAI) and the like). Also provided are compositions systems kits and computer program products that find use in practicing the subject methods. The methods and compositions find use in a variety of applications.

No. of Pages : 60 No. of Claims : 33

(12) PATENT APPLICATION PUBLICATION
(19) INDIA
(22) Date of filing of Application :19/11/2012
(21) Application No.9733/CHENP/2012 A
(43) Publication Date : 19/12/2014

(54) Title of the invention : EVALUATING CAPABILITY OF A SYSTEM TO PERFORM A TASK BY COMPARING MODELS OF THE SYSTEM AND THE TASK

(51) International classification :G05B17/02,G05D1/10
(31) Priority Document No :1008332.7
(32) Priority Date :19/05/2010
(33) Name of priority country :U.K.
(86) International Application No :PCT/GB2011/050938
Filing Date :17/05/2011
(87) International Publication No :WO/2011/144929
(61) Patent of Addition to Application Number :NA
Filing Date :NA
(62) Divisional to Application Number :NA
Filing Date :NA

(71)**Name of Applicant :**
1)BAE SYSTEMS PLC
Address of Applicant :6 Carlton Gardens London SW1Y 5AD U.K.
(72)**Name of Inventor :**
1)GLENN MICHAEL CALLOW

(57) Abstract :
A method and apparatus for evaluating capabilities of a system (e.g. an autonomous vehicle) with respect to the performance of a task, the method comprising: providing a first model (8) corresponding to the task; providing a further model (10) corresponding to the system; providing a plurality of mappings from one model to another model; determining whether there exists a transformation trace either (i) from the first model (8) to the further model (10), or (ii) from the further model (10) to the first model (9), wherein each transformation trace comprises one or more of the specified mappings; and evaluating the capabilities of the system with respect to the task dependent upon the existence of the transformation trace.

No. of Pages : 22 No. of Claims : 15

(12) PATENT APPLICATION PUBLICATION
(19) INDIA
(22) Date of filing of Application :26/11/2012
(21) Application No.9935/CHENP/2012 A
(43) Publication Date : 19/12/2014

(54) Title of the invention : PROCESS VARIABLE TRANSMITTER WITH THERMOCOUPLE POLARITY DETECTION

(51) International classification :G01K7/02
(31) Priority Document No :12/794,968
(32) Priority Date :07/06/2010
(33) Name of priority country :U.S.A.
(86) International Application No :PCT/US2011/038690
Filing Date :01/06/2011
(87) International Publication No :WO/2011/156186
(61) Patent of Addition to Application Number :NA
Filing Date :NA
(62) Divisional to Application Number :NA
Filing Date :NA

(71)**Name of Applicant :**
1)ROSEMOUNT INC.
Address of Applicant :12001 Technology Drive Eden Prairie MN 55344 United States of America
(72)**Name of Inventor :**
1)RUD Jason H.
2)HOLMSTADT Clarence

(57) Abstract :
A process variable transmitter (10) for measuring a temperature of an industrial process includes a first electrical connector (1) configured to couple to a first wire of a thermocouple the first electrical connector (1) includes a first electrode (1A) and a second electrode (IB). The first and second electrodes are configured to electrically couple to the first wire (18B) of the thermocouple. A second electrical connector (2) is configured to couple to a second wire (18A) of the thermocouple the second electrical connector (2) includes a third electrode (2A) and a fourth electrode (2B). The third and fourth electrodes are configured to electrically couple to the second wire (18A) of the thermocouple. The second wire is of a different material than the first wire. Measurement circuitry (28) is coupled to the first and second electrical ...

No. of Pages : 15 No. of Claims : 21

(12) PATENT APPLICATION PUBLICATION
(19) INDIA
(22) Date of filing of Application :17/10/2012
(21) Application No.8916/CHENP/2012 A
(43) Publication Date : 19/12/2014

(54) Title of the invention : COMPOSITE GROWTH SUBSTRATE FOR GROWING A SEMICONDUCTOR DEVICE

(51) International classification :H01L21/02
(31) Priority Document No :12/783354
(32) Priority Date :19/05/2010
(33) Name of priority country :U.S.A.
(86) International Application No :PCT/IB2011/051844
Filing Date :27/04/2011
(87) International Publication No : NA
(61) Patent of Addition to Application Number :NA
Filing Date :NA
(62) Divisional to Application Number :NA
Filing Date :NA

(71)**Name of Applicant :**
1)KONINKLIJKE PHILIPS ELECTRONICS N.V.
Address of Applicant :GROENEWOUDSEWEG 1 EINDHOVEN 5621 BA NETHERLANDS
2)PHILIPS LUMILEDS LIGHTING COMPANY LLC
(72)**Name of Inventor :**
1)KIM Andrew Y.

(57) Abstract :
A method according to embodiments of the invention includes providing an epitaxial structure comprising a donor layer and a strained layer. The epitaxial structure is treated to cause the strained layer to relax. Relaxation of the strained layer causes an in-plane lattice constant of the donor layer to change.

No. of Pages : 23 No. of Claims : 20

(12) PATENT APPLICATION PUBLICATION
(19) INDIA
(22) Date of filing of Application :17/10/2012
(21) Application No.8917/CHENP/2012 A
(43) Publication Date : 19/12/2014

(54) Title of the invention : LIGHT EMITTING DEVICE GROWN ON A RELAXED LAYER

(51) International classification :H01L33/12,H01L21/02,H01L33/32
(31) Priority Document No :12/783197
(32) Priority Date :19/05/2010
(33) Name of priority country :U.S.A.
(86) International Application No :PCT/IB2011/051754
Filing Date :21/04/2011
(87) International Publication No :WO 2011/148273
(61) Patent of Addition to Application Number :NA
Filing Date :NA
(62) Divisional to Application Number :NA
Filing Date :NA

(71)**Name of Applicant :**
1)KONINKLIJKE PHILIPS ELECTRONICS N.V.
Address of Applicant :GROENEWOUDSEWEG 1 EINDHOVEN 5621 BA NETHERLANDS
2)PHILIPS LUMILEDS LIGHTING COMPANY LLC
(72)**Name of Inventor :**
1)KIM Andrew Y.
2)GRILLOT Patrick N.

(57) Abstract :
A light - emitting device includes a first semiconductor layer (30) a second semiconductor layer (32) a third semiconductor layer (34) and a semiconductor structure (10) comprising a 111 -nitride light emitting layer (36) disposed between an n-type region (34) and a p-type region (38). The second semiconductor layer (32) is disposed between the first semiconductor layer (30) and the third semiconductor layer (34). The third semiconductor layer (34) is disposed between the second semiconductor layer (32) and the light emitting layer (36). A difference between the in-plane lattice constant of the first semiconductor layer (30) and the bulk lattice constant of the third semiconductor layer (34) is no more than 1%. A difference between the in-plane lattice constant of the first semiconductor layer (30) and the bulk lattice constant of the second semiconductor layer (32) is at least 1%. The third semiconductor layer (34) is at least partially relaxed.

No. of Pages : 17 No. of Claims : 18

(12) PATENT APPLICATION PUBLICATION
(19) INDIA
(22) Date of filing of Application :17/10/2012
(21) Application No.8918/CHENP/2012 A
(43) Publication Date : 19/12/2014

(54) Title of the invention : HANDLING A SPECIMEN IMAGE

(51) International classification :G06T7/00
(31) Priority Document No :10163262.8
(32) Priority Date :19/05/2010
(33) Name of priority country :EPO
(86) International Application No :PCT/IB2011/052129
Filing Date :16/05/2011
(87) International Publication No :WO 2011/145037
(61) Patent of Addition to Application Number :NA
Filing Date :NA
(62) Divisional to Application Number :NA
Filing Date :NA

(71)**Name of Applicant :**
1)KONINKLIJKE PHILIPS ELECTRONICS N.V.
Address of Applicant :GROENEWOUDSEWEG 1 EINDHOVEN 5621 BA NETHERLANDS
(72)**Name of Inventor :**
1)MEETZ Kirsten
2)BUELOW Thomas
3)CARLSEN Ingwer Curt
4)BERGTHOLDT Martin

(57) Abstract :
A system for handling a specimen image is disclosed. An image input (1) is configured to receive a body image representing at least a portion of a living body and a specimen image representing a dissected portion of the living body. An alignment unit (2) is configured to compute an alignment of the specimen image with the body image based on image content of the specimen image and/or the body image. A border detector (3) is operativelyconnected to the alignment unit (2) and configured to detect at least part of an outer border of the dissected portion in the specimen image.

No. of Pages : 21 No. of Claims : 15

(12) PATENT APPLICATION PUBLICATION
(19) INDIA
(22) Date of filing of Application :25/10/2012
(21) Application No.9115/CHENP/2012 A
(43) Publication Date : 19/12/2014

(54) Title of the invention : MODULAR PROGRAMMABLE LIGHTING BALLAST

(51) International classification :H05B41/38,H05B37/02
(31) Priority Document No :NA
(32) Priority Date :NA
(33) Name of priority country :NA
(86) International Application No :PCT/US2010/033069
Filing Date :30/04/2010
(87) International Publication No : NA
(61) Patent of Addition to Application Number :NA
Filing Date :NA
(62) Divisional to Application Number :NA
Filing Date :NA

(71)**Name of Applicant :**
1)LUMETRIC INC.
Address of Applicant :200 Middlefield Road Suite 201 Menlo Park California 94025 (US). U.S.A.
(72)**Name of Inventor :**
1)SHLOUSH Moshe
2)DAVIS Gregory

(57) Abstract :
A lighting ballast is programmable as to input and output parameters. Both operational characteristics and sensed data are used to control the ballast parameters. The ballast is configured to recapture as electrical energy heat produced by the lamp. The ballast is constructed in modular fashion with a power factor correction circuit module and a ballast control circuit module that snap together to achieve a large number of input voltage and lamp type variations with a small number of separate units.

No. of Pages : 28 No. of Claims : 19

(12) PATENT APPLICATION PUBLICATION
(19) INDIA
(22) Date of filing of Application :19/11/2012
(21) Application No.9726/CHENP/2012 A
(43) Publication Date : 19/12/2014

(54) Title of the invention : PROCESSES FOR PRODUCING MONOAMMONIUM ADIPATE FROM FERMENTATION BROTHS CONTAINING DIAMMONIUM ADIPATE MONOAMMONIUM ADIPATE AND/OR ADIPIC ACID AND CONVERSION OF MONOAMMONIUM ADIPATE TO ADIPIC ACID

(51) International classification :C07C51/02,C07C51/41,C07C29/149
(31) Priority Document No :61/329,768
(32) Priority Date :30/04/2010
(33) Name of priority country :U.S.A.
(86) International Application No :PCT/US2011/032613
Filing Date :15/04/2011
(87) International Publication No :WO/2011/136941
(61) Patent of Addition to Application Number :NA
Filing Date :NA
(62) Divisional to Application Number :NA
Filing Date :NA

(71)**Name of Applicant :**
1)BIOAMBER S.A.S.
Address of Applicant :Route de Pomacle F-51110 Bazancourt France
(72)**Name of Inventor :**
1)FRUCHEY Olan S.
2)MANZER Leo E.
3)DUNUWILA Dilum
4)KEEN Brian T.
5)ALBIN Brooke A.
6)CLINTON Nye A.
7)DOMBEK Bernard D.

(57) Abstract :
A process for making MAA from a clarified DAA-containmg fefme.ntation broth includes (a) distilling: the broth to form an overhead thai includes water and ammonia and a liquid bottoms that includes MAA at least some DAA and at least about 20 wt% water; (fa) cooling the bottoms to a temperature sufficient to cause the bottoms to separate into a DAA-containing liquid portion in contact with a MAA-contaraing solid portion that is substantially free of DAA; (c) separating the solid portion from the liquid portion: and (d) recovering the solid portion.

No. of Pages : 30 No. of Claims : 17

(12) PATENT APPLICATION PUBLICATION
(19) INDIA
(22) Date of filing of Application :06/12/2013
(21) Application No.9727/CHENP/2013 A
(43) Publication Date : 19/12/2014

(54) Title of the invention : HIGH VOLTAGE ENERGY HARVESTING AND CONVERSION RENEWABLE ENERGY UTILITY SIZE ELECTRIC POWER SYSTEMS AND VISUAL MONITORING AND CONTROL SYSTEMS

(51) International classification :H02J3/36,H02J3/38
(31) Priority Document No :61/485384
(32) Priority Date :12/05/2011
(33) Name of priority country :U.S.A.
(86) International Application No :PCT/US2012/037680
Filing Date :13/05/2012
(87) International Publication No :WO 2012/155126
(61) Patent of Addition to Application Number :NA
Filing Date :NA
(62) Divisional to Application Number :NA
Filing Date :NA

(71)**Name of Applicant :**
1)ALENCON ACQUISITION CO. LLC
Address of Applicant :330 South Warminster Road Station Park Suite 380 Hatboro Pennsylvania 19040 U.S.A.
(72)**Name of Inventor :**
1)FISHMAN Oleg S.
2)SCHWABE Ulrich K.W.

(57) Abstract :
A renewable energy utility size electric power system is provided with a high voltage renewable energy harvesting network connected by a direct current link to a centralized grid synchronized multiphase regulated current source inverter system. The harvesting network includes distributed renewable energy power optimizers and transmitters that control delivery of renewable energy to the grid synchronized multiphase regulated current source inverter system. A visual immersion monitoring and control system can be provided for a three dimensional visually oriented virtual reality display and command and control environment.

No. of Pages : 34 No. of Claims : 27

(12) PATENT APPLICATION PUBLICATION
(19) INDIA
(22) Date of filing of Application :06/12/2013
(21) Application No.9729/CHENP/2013 A
(43) Publication Date : 19/12/2014

(54) Title of the invention : METHOD AND SYSTEM FOR INPUTTING INFORMATION TO MOBILE TERMINAL AS WELL AS MOBILE TERMINAL

(51) International classification :H04M3/493
(31) Priority Document No :201110131797.5
(32) Priority Date :20/05/2011
(33) Name of priority country :China
(86) International Application No :PCT/CN2012/075346
Filing Date :11/05/2012
(87) International Publication No :WO 2012/159531
(61) Patent of Addition to Application Number :NA
Filing Date :NA
(62) Divisional to Application Number :NA
Filing Date :NA

(71)**Name of Applicant :**
1)TENCENT TECHNOLOGY (SHENZHEN) COMPANY LIMITED
Address of Applicant :4/F. East 2 Block. SEG Park. Zhenxing Rd. Futian District Shenzhen Guangdong 518044 China
(72)**Name of Inventor :**
1)PENG Chuan
2)ZHANG Jun
3)CHEN Difei
4)ZHAO Junfeng
5)YU Yaohui
6)ZHANG Xu
7)DU Lei

(57) Abstract :
Disclosed are a method and a system for inputting information to a mobile terminal as well as a mobile terminal. The method comprises: a mobile terminal sending a request (101) for acquiring a listening list to a server; the mobile terminal receiving user information in the listening list returned by the server; and the mobile terminal receiving and storing the user information matching a character input by a user with the user information displaying a matching result and determining input information (103) according to selection of the user. The traffic of mobile communication can be saved and the success rate of information transmission can be increased by applying the present invention.

No. of Pages : 16 No. of Claims : 13

(12) PATENT APPLICATION PUBLICATION
(19) INDIA
(22) Date of filing of Application :27/02/2013
(21) Application No.861/CHE/2013 A
(43) Publication Date : 19/12/2014

(54) Title of the invention : BLACK PEPPER PLUCKING DEVICE

(51) International classification :A47G
(31) Priority Document No :NA
(32) Priority Date :NA
(33) Name of priority country :NA
(86) International Application No :NA
Filing Date :NA
(87) International Publication No : NA
(61) Patent of Addition to Application Number :NA
Filing Date :NA
(62) Divisional to Application Number :NA
Filing Date :NA

(71)**Name of Applicant :**
1)PRATHEESH C
Address of Applicant :CHAKKAMTHODI(H), ALANALLU VIA PALAKKAD - 678 601 Kerala India
(72)**Name of Inventor :**
1)PRATHEESH C

(57) Abstract :
The present invention discloses a black pepper plucking device(100). Said device(100) comprises of a black pepper holding cup(11) which is pentagonal in shape i.e. encompasses a combination of box shaped portion (11-B) and a triangular shaped sharp edged portion (11-T). Said cup comprising of a plurality of angular teeth(12) projecting inwardly on the triangular shaped portion(11-T). Also, said cup comprises of a removable hollow pipe (13) connected to the box shaped portion (11-B) via a outlet/hole(14). There is a pre-defined provision on the cup(11) encircling over the outlet/hole(14), for easy connection of the removable hollow pipe (13). The said pipe(13) will act as a handle of the device(100) when connected to the cup(11).

No. of Pages : 12 No. of Claims : 9

(12) PATENT APPLICATION PUBLICATION
(19) INDIA
(22) Date of filing of Application :26/10/2012
(21) Application No.9156/CHENP/2012 A
(43) Publication Date : 19/12/2014

(54) Title of the invention : ADSORPTION PURIFICATION OF CARAMEL

(51) International classification :A23L1/015,A23G3/32,A23L1/275
(31) Priority Document No :61/321,919
(32) Priority Date :08/04/2010
(33) Name of priority country :U.S.A.
(86) International Application No :PCT/US2011/029713
Filing Date :24/03/2011
(87) International Publication No :WO/2011/126752
(61) Patent of Addition to Application Number :NA
Filing Date :NA
(62) Divisional to Application Number :NA
Filing Date :NA

(71)**Name of Applicant :**
1)PEPSICO INC.
Address of Applicant :700 Anderson Hill Road Purchase NY 10577 United States of America
(72)**Name of Inventor :**
1)RAMASWAMY Setlur Ranganna
2)WALBERG Charles

(57) Abstract :
A process of purifying a caramel color solution comprising introducing the caramel color solution into an adsorbent wherein the adsorbent adsorbs 4-MeI to form a purified caramel color solution and adding an acid to the purified caramel color solution to lower the pH to less than 5.

No. of Pages : 13 No. of Claims : 23

(12) PATENT APPLICATION PUBLICATION
(19) INDIA
(22) Date of filing of Application :02/11/2012
(21) Application No.9360/CHENP/2012 A
(43) Publication Date : 19/12/2014

(54) Title of the invention : SUPPORT OF MULTIPLE POSITIONING PROTOCOLS

(51) International classification :H04W64/00
(31) Priority Document No :61/348,606
(32) Priority Date :26/05/2010
(33) Name of priority country :U.S.A.
(86) International Application No :PCT/US2011/038211
Filing Date :26/05/2011
(87) International Publication No :WO/2011/150259
(61) Patent of Addition to Application Number :NA
Filing Date :NA
(62) Divisional to Application Number :NA
Filing Date :NA

(71)**Name of Applicant :**
1)QUALCOMM INCORPORATED
Address of Applicant :Attn: International IP Administration 5775 Morehouse Drive San Diego California 92121-1714 United States of America
(72)**Name of Inventor :**
1)EDGE Stephen W.

(57) Abstract :
A mobile terminal and network location server support multiple positioning protocols so that a first position measurement of the mobile terminal may be obtained using a positioning protocol defined for a first wireless network and a second position measurement of the mobile terminal may be obtained using a different positioning protocol defined for a different wireless network during the same location session. The first position measurement and the second position measurement can then be used together to determine a position of the mobile terminal.

No. of Pages : 38 No. of Claims : 33

(12) PATENT APPLICATION PUBLICATION
(19) INDIA
(22) Date of filing of Application :02/11/2012
(21) Application No.9369/CHENP/2012 A
(43) Publication Date : 19/12/2014

(54) Title of the invention : MICROELECTRONIC PACKAGE AND METHOD OF MANUFACTURING SAME

(51) International classification	:H01L23/485,H01L23/48,H01L23/12
(31) Priority Document No	:12/825,729
(32) Priority Date	:29/06/2010
(33) Name of priority country	:U.S.A.
(86) International Application No	:PCT/US2011/042126
Filing Date	:28/06/2011
(87) International Publication No	:WO/2012/006063
(61) Patent of Addition to Application Number	:NA
Filing Date	:NA
(62) Divisional to Application Number	:NA
Filing Date	:NA

(71)**Name of Applicant :**
1)INTEL CORPORATION
Address of Applicant :2200 MISSION COLLEGE BLVD. SANTA CLARA CA 95052 UNITED STATES OF AMERICA
(72)**Name of Inventor :**
1)NALLA Ravi K.
2)MANUSHAROW Mathew J.
3)DELANEY Drew

(57) Abstract :
A microelectronic package includes a substrate (110) a die (120) embedded within the substrate the die having a front side (121) and a back side (122) and a through-silicon-via (123) therein build-up layers (130) built up over the front side of the die and a power plane (140) in physical contact with the back side of the die. In another embodiment the microelectronic package comprises a substrate (210) a fIrst die (220) and a second die (260) embedded in the substrate and having a front side (221 261) and a back side (222 262) and a through-silicon-via (223 263) therein build-up layers (230) over the front sides of the fIrst and second dies and an electrically conductive structure (240) in physical contact with the back sides of the fIrst and second dies.

No. of Pages : 20 No. of Claims : 20

(12) PATENT APPLICATION PUBLICATION
(19) INDIA
(22) Date of filing of Application :21/11/2012
(21) Application No.9804/CHENP/2012 A
(43) Publication Date : 19/12/2014

(54) Title of the invention : APPARATUS AND METHOD FOR MEASURING A TISSUE ANALYTE SUCH AS BILIRUBIN USING THE BREWSTER™S ANGLE

(51) International classification	:A61B5/00,G01N21/21,G01N21/47
(31) Priority Document No	:61/351053
(32) Priority Date	:03/06/2010
(33) Name of priority country	:U.S.A.
(86) International Application No	:PCT/IB2011/051889
Filing Date	:28/04/2011
(87) International Publication No	:WO/2011/151744
(61) Patent of Addition to Application Number	:NA
Filing Date	:NA
(62) Divisional to Application Number	:NA
Filing Date	:NA

(71)**Name of Applicant :**
1)KONINKLIJKE PHILIPS ELECTRONICS N.V.
Address of Applicant :GROENEWOUDSEWEG 1 EINDHOVEN 5621 BA NETHERLANDS
(72)**Name of Inventor :**
1)KUDAVELLY Srinivas Rao
2)MEIJER Eduard Johannes

(57) Abstract :
A tissue analyte measuring device (2) includes a light source (4) structured to emit unpolarized light toward the skin surface of a subject and a detector assembly (8) configured to receive light reflected from the skin surface of the subject and the transcutaneous tissues of the subject the detector assembly including a polarizing filter (12) and a number of light detector subassemblies (14). The polarizing filter is structured to filter out s-polarized light and pass only p-polarized light to light detector subassemblies. The light source is structured and positioned to emit the unpolarized light in a manner wherein the unpolarized light will exit the measuring device at a predetermined angle with respect to a normal to a light emitting plane of the measuring device

No. of Pages : 14 No. of Claims : 17

(12) PATENT APPLICATION PUBLICATION
(19) INDIA
(22) Date of filing of Application :09/12/2013
(21) Application No.9805/CHENP/2013 A
(43) Publication Date : 19/12/2014

(54) Title of the invention : METHOD AND APPARATUS FOR SEARCHING NON PUBLIC DATA USING A SINGLE SEARCH QUERY

(51) International classification :G06F7/00
(31) Priority Document No :61/484170
(32) Priority Date :09/05/2011
(33) Name of priority country :U.S.A.
(86) International Application No :PCT/US2012/037140
Filing Date :09/05/2012
(87) International Publication No :WO 2012/154863
(61) Patent of Addition to Application Number :NA
Filing Date :NA
(62) Divisional to Application Number :NA
Filing Date :NA

(71)**Name of Applicant :**
1)WYSE TECHNOLOGY L.L.C.
Address of Applicant :3471 N. First Street San Jose CA 95134 U.S.A.
(72)**Name of Inventor :**
1)NANDAKUMAR Sarun Madarakal
2)BINGOL Evren
3)LIN Yu Te
4)BARRETO Daniel Ernesto

(57) Abstract :
Method and apparatus for facilitating real time searching of non public data using a single search query are provided. Method includes facilitating reporting of availability of companion application of remote source unit to auto discovery module to enable client device to automatically discover remote source unit and to enable client device to search in real time non public data on remote source unit using single search query. Companion application is non public application. Single search query comprises a search term. Method includes enabling automatic access to non public data on remote source unit by single search query. Method includes facilitating receipt at remote source unit of single search query with search term. Method includes in response to single search query searching in real time non public data on remote source unit using search term; retrieving in real time non public search result comprising one or more file names or folder names; and transmitting non public search result in real time.

No. of Pages : 114 No. of Claims : 32

(12) PATENT APPLICATION PUBLICATION
(19) INDIA
(22) Date of filing of Application :21/11/2012
(21) Application No.9806/CHENP/2012 A
(43) Publication Date : 19/12/2014

(54) Title of the invention : EXPANDED SEARCH SPACE FOR R-PDCCH IN LTE-A

(51) International classification :H04L5/00,H04B7/04,H04W88/04
(31) Priority Document No :61/331,797
(32) Priority Date :05/05/2010
(33) Name of priority country :U.S.A.
(86) International Application No :PCT/US2011/035414
Filing Date :05/05/2011
(87) International Publication No :WO/2011/140384
(61) Patent of Addition to Application Number :NA
Filing Date :NA
(62) Divisional to Application Number :NA
Filing Date :NA

(71)**Name of Applicant :**
1)QUALCOMM INCORPORATED
Address of Applicant :ATTN: International IP Administration 5775 Morehouse Drive San Diego California 92121-1714 U.S.A.
(72)**Name of Inventor :**
1)PETER GAAL
2)WANSHI CHEN
3)JUAN MONTOJO

(57) Abstract :
Certain aspects of the present disclosure provide techniques and apparatuses for providing an expanded search space for a relay-specific control channel on a backhaul link. According to certain aspects, due to inband interference, a Relay Physical Downlink Control Channel (R-PDCCH) may be signaled utilizing resources reserved for backhaul data. According to certain aspects, a two-dimensional search space may be provided for R-PDCCH. R-PDCCH may be transmitted in one of a plurality of layer-specific search spaces corresponding to one of a plurality of antenna ports. Further, in a layer-specific search space, R-PDCCH may be transmitted using at least one of multiple R-PDCCH decoding candidates from a common search space and/or a relay node-specific search space.

No. of Pages : 41 No. of Claims : 56

(12) PATENT APPLICATION PUBLICATION
(19) INDIA
(22) Date of filing of Application :10/12/2013
(21) Application No.9823/CHENP/2013 A
(43) Publication Date : 19/12/2014

(54) Title of the invention : LIGHT EMITTING DEVICE AND PHOTO THERAPY DEVICE COMPRISING A LIGHT EMITTING DEVICE

(51) International classification :A61N5/06
(31) Priority Document No :11170450.8
(32) Priority Date :17/06/2011
(33) Name of priority country :EPO
(86) International Application No :PCT/IB2012/052822
Filing Date :05/06/2012
(87) International Publication No :WO 2012/172456
(61) Patent of Addition to Application Number :NA
Filing Date :NA
(62) Divisional to Application Number :NA
Filing Date :NA

(71)**Name of Applicant :**
1)KONINKLIJKE PHILIPS N.V.
Address of Applicant :High Tech Campus 5 NL 5656 AE Eindhoven Netherlands
(72)**Name of Inventor :**
1)VAN OS Jacobus Petrus Johannes
2)DEKKER Tim
3)OVERSLUIZEN Gerrit
4)LEMMENS Paul Marcel Carl
5)VAN ABEELEN Frank Anton
6)SPOORENDONK Wouter Hendrik Cornelis

(57) Abstract :
A light emitting device (100) is disclosed. The light emitting device (100) comprises a plurality of light emitting elements (135) or light sources and a power module(120) adapted to selectively convey supply or provide electrical power to the light emitting elements (135). The power module (120) may be dimensioned such as to be able to power only a proper subset of the light emitting elements (135) of the light emitting device (100) at a given time the subset having a maximum number of light emitting elements (135) included therein with respect to the number of light emitting elements (135) included in the all subsets of the light emitting elements (135) of the light emitting device (100).The plurality of sets of light emitting elements (135) maybe arranged so as to emit light over a light emission area and the plurality of sets of light emitting elements (135) may be arranged relatively to each other such that different sets of light emitting elements (135) emit light over different portions of the light emission area.

No. of Pages : 40 No. of Claims : 18

(12) PATENT APPLICATION PUBLICATION
(19) INDIA
(22) Date of filing of Application :10/12/2013
(21) Application No.9824/CHENP/2013 A
(43) Publication Date : 19/12/2014

(54) Title of the invention : METHOD OF VISUALIZING A BRIDGE THERAPY PROCESS

(51) International classification :G06F19/00
(31) Priority Document No :11170089.4
(32) Priority Date :16/06/2011
(33) Name of priority country :EPO
(86) International Application No :PCT/IB2012/052961
Filing Date :12/06/2012
(87) International Publication No :WO 2012/172481
(61) Patent of Addition to Application Number :NA
Filing Date :NA
(62) Divisional to Application Number :NA
Filing Date :NA

(71)**Name of Applicant :**
1)KONINKLIJKE PHILIPS N.V.
Address of Applicant :High Tech Campus 5 NL 5656 AE Eindhoven Netherlands
(72)**Name of Inventor :**
1)VAN OOIJEN Hendrik Jan
2)VAN DEN HAM Ren
3)BAKKER Bart Jacob

(57) Abstract :
The present invention provides for a simultaneous graphical representation a risk of bleeding and a risk of thrombosis providing a visualized bridge therapy process. Furthermore the present invention provides for a computer based prediction of the haemostatic situation of the examined blood circulation by using a combination of a biochemical model and a pharmacokinetic model for calculation or another mathematical representation of the blood circulation.

No. of Pages : 46 No. of Claims : 15

(12) PATENT APPLICATION PUBLICATION
(19) INDIA
(22) Date of filing of Application :10/12/2013
(21) Application No.9825/CHENP/2013 A
(43) Publication Date : 19/12/2014

(54) Title of the invention : ROBUST DAYLIGHT INTEGRATION WITH THE AID OF CODED LIGHT.

(51) International classification :H05B33/08
(31) Priority Document No :11170155.3
(32) Priority Date :16/06/2011
(33) Name of priority country :EPO
(86) International Application No :PCT/IB2012/052773
Filing Date :01/06/2012
(87) International Publication No :WO 2012/172453
(61) Patent of Addition to Application Number :NA
Filing Date :NA
(62) Divisional to Application Number :NA
Filing Date :NA

(71)**Name of Applicant :**
1)KONINKLIJKE PHILIPS N.V.
Address of Applicant :High Tech Campus 5 NL 5656 AE Eindhoven Netherlands
(72)**Name of Inventor :**
1)RIETMAN Ronald
2)FERI Lorenzo
3)VISSENBERG Michel Cornelis Josephus Marie
4)PASVEER Willem Franke

(57) Abstract :
The present invention relates to a method of controlling a dimmable luminaire co arranged with a light sensor at a first level of a room and illuminating a second level of the room comprising: determining an output path parameter representing a relation between the amount of light emitted from the luminaire and a luminaire illumination value at the second level which results from the emitted amount of light; and repeatedly: determining an external illumination value at the second level which external illumination value represents illumination by other sources than the luminaire by means of values of the presently emitted amount of light the output path parameter and light information originating from the light sensor; and controlling the dimming level of the luminaire on basis of the external illumination value in order to meet a predetermined illumination condition for the total illumination at the second level.

No. of Pages : 15 No. of Claims : 11

(12) PATENT APPLICATION PUBLICATION
(19) INDIA
(22) Date of filing of Application :05/12/2013
(21) Application No.9708/CHENP/2013 A
(43) Publication Date : 19/12/2014

(54) Title of the invention : BERFEED

(51) International classification :G06F15/16,G06Q50/30
(31) Priority Document No :13/152691
(32) Priority Date :03/06/2011
(33) Name of priority country :U.S.A.
(86) International Application No :PCT/US2012/040146
Filing Date :31/05/2012
(87) International Publication No :WO 2012/166876
(61) Patent of Addition to Application Number :NA
Filing Date :NA
(62) Divisional to Application Number :NA
Filing Date :NA

(71)**Name of Applicant :**
1)FACEBOOK INC.
Address of Applicant :1601 Willow Road Menlo Park CA 94025 U.S.A.
(72)**Name of Inventor :**
1)TSENG Erick

(57) Abstract :
In one embodiment a computing device may collect a plurality of information items of a plurality of types relevant to a user; rank the plurality of information items based on their respective degrees of relevance to the user; construct an information feed that includes the plurality of information items in an order of their respective ranks; and send the information feed to a user device associated with the user for presentation of the plurality of information items to the user in the order of their respective ranks.

No. of Pages : 30 No. of Claims : 20

(12) PATENT APPLICATION PUBLICATION
(19) INDIA
(22) Date of filing of Application :05/12/2013
(21) Application No.9709/CHENP/2013 A
(43) Publication Date : 19/12/2014

(54) Title of the invention : SYSTEMS APPARATUSES DEVICES AND PROCESSES FOR SYNERGISTIC NEURO PHYSIOLOGICAL REHABILITATION AND/OR FUNCTIONAL DEVELOPMENT

(51) International classification	:A61B5/0476,A61B5/0488,A61N1/36
(31) Priority Document No	:61/488185
(32) Priority Date	:20/05/2011
(33) Name of priority country	:U.S.A.
(86) International Application No	:PCT/SG2012/000177
Filing Date	:21/05/2012
(87) International Publication No	:WO 2012/161657
(61) Patent of Addition to Application Number	:NA
Filing Date	:NA
(62) Divisional to Application Number	:NA
Filing Date	:NA

(71)**Name of Applicant :**
1)NANYANG TECHNOLOGICAL UNIVERSITY
Address of Applicant :Nanyang Innovation and Enterprise Office (NIEO) Innovation Centre Block 1 Unit 100 16 Nanyang Drive Singapore 637722 Singapore
(72)**Name of Inventor :**
1)BANERJI Subhasis
2)HENG Kok Hui John Gerard

(57) Abstract :
In an embodiment a system for facilitating a subject s functional development includes sensing devices configured for sensing mind state signals; sensing devices configured for sensing body state signals; and a set of processing resources configured for generating a mind state indicator / measure a body state indicator / measure and a mind body synergy indicator / measure that corresponds to an expected extent to which each of the subject s mind state and the subject s body state are cooperatively or synergistically aligned with respect to facilitating the subject s functional development. In an embodiment the system can be configured for concurrently presenting a set of activities involving a model body part; engaging the subject in attempted imitation of the set of activities by way of attempted movement of a subject body part that is a mirror image of the model body part; presenting an indication of an expected extent to which each of the subject s mind state and body state are cooperative with respect to subject performance of the set of activities; and presenting an indication of an extent of subject relaxation. An associated multiple (e.g. up to 12) degree of freedom robotic orthosis can include a set of appendage motion modules configured for engaging with a portion of a subject appendage; a set of mechanical power interface modules coupled to the set of appendage motion modules and configured for facilitating movement of appendage motion modules within the set of appendage motion modules; and a set of flexible drive shafts couplable to the set of mechanical power interface modules.

No. of Pages : 167 No. of Claims : 38

(12) PATENT APPLICATION PUBLICATION
(19) INDIA
(22) Date of filing of Application :08/11/2012
(21) Application No.9531/CHENP/2012 A
(43) Publication Date : 19/12/2014

(54) Title of the invention : SYSTEM AND METHOD FOR DETECTING SLEEP ONSET IN A SUBJECT BASED RESPONSIVENESS TO BREATHING CUES

(51) International classification :A61M16/00
(31) Priority Document No :61/334597
(32) Priority Date :14/05/2010
(33) Name of priority country :U.S.A.
(86) International Application No :PCT/IB2011/051790
Filing Date :25/04/2011
(87) International Publication No :WO/2011/141843
(61) Patent of Addition to Application Number :NA
Filing Date :NA
(62) Divisional to Application Number :NA
Filing Date :NA

(71)**Name of Applicant :**
1)KONINKLIJKE PHILIPS ELECTRONICS N.V.
Address of Applicant :GROENEWOUDSEWEG 1 EINDHOVEN 5621 BA NETHERLANDS
(72)**Name of Inventor :**
1)BALOA WELZIEN Leonardo Alberto
2)LAURA LAPOINT Manuel
3)SIBNALLER Sara Marie

(57) Abstract :
A wake-to-sleep transition for a subject is detected based on responsiveness to breathing cues provided to the subject. A pressurized flow of breathable gas to the airway of subject having one or more gas parameters that are adjusted to provide breathing cues to the subject. Based on a detected conformance of the respiration of the subject to the breathing cues a determination is made as to whether the subject is awake or asleep.

No. of Pages : 23 No. of Claims : 15

(12) PATENT APPLICATION PUBLICATION
(19) INDIA
(22) Date of filing of Application :05/02/2013
(21) Application No.924/CHENP/2013 A
(43) Publication Date : 19/12/2014

(54) Title of the invention : SYSTEM AND METHOD FOR CREATING FINANCIAL TOOLS

(51) International classification :G06F19/00
(31) Priority Document No :NA
(32) Priority Date :NA
(33) Name of priority country :NA
(86) International Application No :PCT/IN2010/000524
Filing Date :06/08/2010
(87) International Publication No :WO 2012/017442
(61) Patent of Addition to Application Number :NA
Filing Date :NA
(62) Divisional to Application Number :NA
Filing Date :NA

(71)**Name of Applicant :**
1)INFOSYS LIMITED
Address of Applicant :IP Cell, Plot No. 44 Electronics City Hosur Road Bangalore 560 100 Karnataka India
(72)**Name of Inventor :**
1)CHAPMAN Chris

(57) Abstract :
A system and method for developing a financial tool is provided. The system is an enterprise level framework. The system for developing a financial tool includes a User Interface Module a Component Module a Business Logic Layer Module and an Application Programming Interface (API). The User Interface Module is configured to develop a user interface of a financial tool based on the requirements of a business solution. The Component Module is configured to define the structure and the function of the user interface of the financial tool being developed based on the requirement of the business solution. The Business Logic Layer Module is configured to process data in the financial tool based on the requirement of the business solution. The API is configured to retrieve data from an end user or an external data source to further process the retrieved data based on the requirement of the business solution.

No. of Pages : 39 No. of Claims : 18

(12) PATENT APPLICATION PUBLICATION
(19) INDIA
(22) Date of filing of Application :10/12/2013
(21) Application No.9819/CHENP/2013 A
(43) Publication Date : 19/12/2014

(54) Title of the invention : IMAGING APPARATUS

(51) International classification :G01N23/04,A61B6/03
(31) Priority Document No :11305778.0
(32) Priority Date :21/06/2011
(33) Name of priority country :EPO
(86) International Application No :PCT/IB2012/052865
Filing Date :07/06/2012
(87) International Publication No :WO 2012/176088
(61) Patent of Addition to Application Number :NA
Filing Date :NA
(62) Divisional to Application Number :NA
Filing Date :NA

(71)**Name of Applicant :**
1)KONINKLIJKE PHILIPS N.V.
Address of Applicant :High Tech Campus 5 NL 5656 AE Eindhoven Netherlands
(72)**Name of Inventor :**
1)R–SSL Ewald
2)THRAN Axel
3)PROKSA Roland

(57) Abstract :
The invention relates to an imaging apparatus (31) for imaging an object. A reconstruction unit (12) determines component projection data values which correspond to for example a base material of the object and reconstructs an image of the object based on the determined component projection data values. A component projection data value which corresponds to a ray is determined as a combination of weighted base functions which depend on energy projection data values of the same ray and the orientation of the same ray. This allows considering a possible dependency of the corresponding decomposition on the orientation of the ray thereby allowing the imaging apparatus to improve the quality of decomposing the provided energy projection data values into the component projection data values and thus of a finally reconstructed image of the object which is reconstructed based on the component projection data values.

No. of Pages : 30 No. of Claims : 14

(12) PATENT APPLICATION PUBLICATION
(19) INDIA
(22) Date of filing of Application :22/01/2014
(21) Application No.542/CHENP/2014 A
(43) Publication Date : 19/12/2014

(54) Title of the invention : MACROGOL 15 HYDROXYSTEARATE FORMULATIONS

(51) International classification :A61K9/00,A61K47/14
(31) Priority Document No :61/502637
(32) Priority Date :29/06/2011
(33) Name of priority country :U.S.A.
(86) International Application No :PCT/US2012/045145
Filing Date :29/06/2012
(87) International Publication No :WO 2013/003827
(61) Patent of Addition to Application Number :NA
Filing Date :NA
(62) Divisional to Application Number :NA
Filing Date :NA

(71)**Name of Applicant :**
1)ALLERGAN INC.
Address of Applicant :2525 Dupont Drive Irvine California 92612 U.S.A.
(72)**Name of Inventor :**
1)GORE Anuradha V.
2)WARNER Kevin S.
3)PUJARA Chetan P.
4)GRAHAM Richard S.
5)PARASHAR Ajay P.
6)LEE Mu Lan
7)JORDAN Robert S.
8)LIKITLERSUANG Sukhon

(57) Abstract :
Provided herein are compositions which include an active pharmaceutical ingredient and macrogol 15 hydroxystearate and methods for using the same for treating diseases or disorder.

No. of Pages : 158 No. of Claims : 20

(12) PATENT APPLICATION PUBLICATION
(19) INDIA
(22) Date of filing of Application :10/10/2012
(21) Application No.8656/CHENP/2012 A
(43) Publication Date : 19/12/2014

(54) Title of the invention : ADAPTIVE RESOURCE NEGOTIATION BETWEEN BASE STATIONS FOR ENHANCED INTERFERENCE COORDINATION

(51) International classification :H04W28/16
(31) Priority Document No :61/323,811
(32) Priority Date :13/04/2010
(33) Name of priority country :U.S.A.
(86) International Application No :PCT/US2011/032360
Filing Date :13/04/2011
(87) International Publication No :WO/2011/130438
(61) Patent of Addition to Application Number :NA
Filing Date :NA
(62) Divisional to Application Number :NA
Filing Date :NA

(71)**Name of Applicant :**
1)QUALCOMM INCORPORATED
Address of Applicant :ATTN: International IP Administration 5775 Morehouse Drive San Diego California 92121-1714 U.S.A.
(72)**Name of Inventor :**
1)OSOK SONG
2)ALEKSANDAR DAMNJANOVIC
3)TINGFANG JI
4)PARAG ARUN AGASHE
5)JABER MOHAMMAD BORRAN
6)MADHAVAN SRINIVASAN VAJAPEYAM
7)STEFAN GEIRHOFER

(57) Abstract :
Methods and apparatus for supporting adaptive resource negotiation between evolved node Bs (eNBs) for enhanced inter-cell interference coordination (eICIC) are provided. This resource negotiation may occur via a network backhaul between the eNBs or, in some cases, using over-the-air messages (OAMs). For certain aspects, a first eNB may propose its adaptive resource partitioning information (ARPI) to a second eNB, where the second eNB may accept or reject the proposed resource partitioning. If the second eNB accepts the proposed partitioning, the second eNB may schedule resources, such as subframes, based on the accepted partitioning.

No. of Pages : 50 No. of Claims : 112

(12) PATENT APPLICATION PUBLICATION
(19) INDIA
(22) Date of filing of Application :10/10/2012
(21) Application No.8657/CHENP/2012 A
(43) Publication Date : 19/12/2014

(54) Title of the invention : NOISE PADDING TECHNIQUES IN HETEROGENEOUS NETWORKS

(51) International classification :H04W84/04,H04J11/00
(31) Priority Document No :61/323,855
(32) Priority Date :13/04/2010
(33) Name of priority country :U.S.A.
(86) International Application No :PCT/US2011/032345
Filing Date :13/04/2011
(87) International Publication No :WO/2011/130424
(61) Patent of Addition to Application Number :NA
Filing Date :NA
(62) Divisional to Application Number :NA
Filing Date :NA

(71)**Name of Applicant :**
1)QUALCOMM INCORPORATED
Address of Applicant :ATTN: International IP Administration 5775 Morehouse Drive San Diego California 92121-1714 U.S.A.
(72)**Name of Inventor :**
1)HAO XU
2)TINGFANG JI
3)RENQIU WANG
4)DURGA PRASAD MALLADI
5)MADHAVAN SRINIVASAN VAJAPEYAM

(57) Abstract :
A method of wireless communication includes detecting uplink interference in a received uplink transmission of a user equipment. The received uplink transmission is padded with noise based on the detected interference and also based on a frequency domain partition, whether a subframe is protected, and/or a user equipment type.

No. of Pages : 35 No. of Claims : 22

(12) PATENT APPLICATION PUBLICATION
(19) INDIA
(22) Date of filing of Application :11/11/2013
(21) Application No.9012/CHENP/2013 A
(43) Publication Date : 19/12/2014

(54) Title of the invention : ALGAL DESATURASES

(51) International classification :C07g
(31) Priority Document No :61/480353
(32) Priority Date :28/04/2011
(33) Name of priority country :U.S.A.
(86) International Application No :PCT/US2012/035633
Filing Date :27/04/2012
(87) International Publication No :WO 2012/149457
(61) Patent of Addition to Application Number :NA
Filing Date :NA
(62) Divisional to Application Number :NA
Filing Date :NA

(71)**Name of Applicant :**
1)AURORA ALGAE INC.
Address of Applicant :3325 Investment Blvd. Hayward California 94545 U.S.A.
(72)**Name of Inventor :**
1)KILIAN Oliver
2)VICK Bertrand

(57) Abstract :
Provided herein are exemplary isolated nucleotide sequences encoding polypeptides having desaturase activity which utilize fatty acids as substrates.

No. of Pages : 28 No. of Claims : 19

(12) PATENT APPLICATION PUBLICATION
(19) INDIA
(22) Date of filing of Application :30/10/2012
(21) Application No.9226/CHENP/2012 A
(43) Publication Date : 19/12/2014

(54) Title of the invention : VOICE ACTIVITY DETECTION

(51) International classification :G10L11/02
(31) Priority Document No :61/327,009
(32) Priority Date :22/04/2010
(33) Name of priority country :U.S.A.
(86) International Application No :PCT/US2011/033654
Filing Date :22/04/2011
(87) International Publication No :WO/2011/133924
(61) Patent of Addition to Application Number :NA
Filing Date :NA
(62) Divisional to Application Number :NA
Filing Date :NA

(71)**Name of Applicant :**
1)QUALCOMM INCORPORATED
Address of Applicant :Attn: International IP Administration 5775 Morehouse Drive San Diego California 92121-1714 United States of America
(72)**Name of Inventor :**
1)VISSER Erik
2)LIU Ian Ernan
3)SHIN Jongwon

(57) Abstract :
Implementations and applications are disclosed for detection of a transition in a voice activity state of an audio signal based on a change in energy that is consistent in time across a range of frequencies of the signal.

No. of Pages : 120 No. of Claims : 48

(12) PATENT APPLICATION PUBLICATION
(19) INDIA
(22) Date of filing of Application :30/10/2012
(21) Application No.9227/CHENP/2012 A
(43) Publication Date : 19/12/2014

(54) Title of the invention : METHOD AND APPARATUS FOR ENCODING VIDEO BY COMPENSATING FOR PIXEL VALUE ACCORDING TO PIXEL GROUPS AND METHOD AND APPARATUS FOR DECODING VIDEO BY THE SAME

(51) International classification :H04N7/24
(31) Priority Document No :10-2010-0031143
(32) Priority Date :05/04/2010
(33) Name of priority country :Republic of Korea
(86) International Application No :PCT/KR2011/002373
Filing Date :05/04/2011
(87) International Publication No :WO/2011/126273
(61) Patent of Addition to Application Number :NA
Filing Date :NA
(62) Divisional to Application Number :NA
Filing Date :NA

(71)**Name of Applicant :**
1)SAMSUNG ELECTRONICS CO. LTD.
Address of Applicant :129 Samsung-ro Yeongtong-gu Suwon-si Gyeonggi-do 443-742 Republic of Korea
(72)**Name of Inventor :**
1)ALSHIN Alexander
2)ALSHINA Elena
3)SHLYAKHOV Nikolay

(57) Abstract :
A method and apparatus of encoding and decoding a video by compensating for a pixel value are provided the method of encoding the video includes: encoding image data; decoding the encoded image data and generating a restored image by performing loop filtering on the decoded image data; determining a compensation value corresponding to errors between a predetermined group restored pixels in the restored image and corresponding original pixels and a pixel group including a restored pixel to be compensated for by using the compensation value; and encoding the compensation value and transmitting the encoded compensation value and a bitstream of the encoded image data.

No. of Pages : 70 No. of Claims : 15

(12) PATENT APPLICATION PUBLICATION
(19) INDIA
(22) Date of filing of Application :27/12/2011
(21) Application No.9850/CHENP/2011 A
(43) Publication Date : 19/12/2014

(54) Title of the invention : SEAT BACK FRAME FOR VEHICLE SEAT

(51) International classification :B60N2/42
(31) Priority Document No :2009-153754
(32) Priority Date :29/06/2009
(33) Name of priority country :Japan
(86) International Application No :PCT/JP2010/004056
Filing Date :17/06/2010
(87) International Publication No :WO 2011/001622 A1
(61) Patent of Addition to Application Number :NA
Filing Date :NA
(62) Divisional to Application Number :NA
Filing Date :NA

(71)**Name of Applicant :**
1)HONDA MOTOR CO., LTD.
Address of Applicant :1-1, MINAMI-AOYAMA 2-CHOME, MINATO-KU TOKYO, 107-8556 Japan
(72)**Name of Inventor :**
1)YAMAKI, JOGEN
2)SAITO, KENICHI
3)ABE, TAKESHI
4)NISHIDE, HARUTOMI
5)FURUTA, YOZO
6)OKA, YOSHITOMO
7)OKU, HISATO

(57) Abstract :
A seat back frame for the vehicle seat, includes a pair of side frames that are disposed on both sides in a seat width direction; and a supporting plate that has both ends connected to a bottom section of each of the side frames, wherein the supporting plate is at least disposed along an interval between a first height that corresponds to an upper part of a lumbar vertebra of an occupant seated in the seat and a second height that corresponds to a lower part of the lumbar vertebra, and curves in a manner such that, in a cross-section along with a vertical direction, the supporting plate bulges forward along a line from the first height to the second height.

No. of Pages : 72 No. of Claims : 10

(12) PATENT APPLICATION PUBLICATION
(19) INDIA
(22) Date of filing of Application :10/12/2013
(21) Application No.9852/CHENP/2013 A
(43) Publication Date : 19/12/2014

(54) Title of the invention : IMPROVEMENTS IN SQUARE BALERS

(51) International classification :A01F15/08
(31) Priority Document No :BE2011/0363
(32) Priority Date :15/06/2011
(33) Name of priority country :Belgium
(86) International Application No :PCT/EP2012/061100
Filing Date :12/06/2012
(87) International Publication No :WO 2012/171907
(61) Patent of Addition to Application Number :NA
Filing Date :NA
(62) Divisional to Application Number :NA
Filing Date :NA

(71)**Name of Applicant :**
1)CNH BELGIUM N.V.
Address of Applicant :Leon Claeysstraat 3A B 8210 Zedelgem Belgium
(72)**Name of Inventor :**
1)MISSOTTEN Bart
2)MONTEYNE Niklaas
3)VERHAEGHE Didier

(57) Abstract :
A square baler is described comprising a control system having a closed loop mode of operation in which at least one of the volume of the feeder duct 16 and the threshold pressure of the pressure sensor 32 is varied automatically to maintain the capacity parameter within one of a plurality of desired capacity ranges. The desired capacity range is selected by the control system in such a manner as to maintain the width of each slice in the finished bale within predetermined limits.

No. of Pages : 14 No. of Claims : 12

(12) PATENT APPLICATION PUBLICATION
(19) INDIA
(22) Date of filing of Application :23/11/2012
(21) Application No.9917/CHENP/2012 A
(43) Publication Date : 19/12/2014

(54) Title of the invention : PLANTS HAVING INCREASED TOLERANCE TO HERBICIDES

(51) International classification :C12N15/82,A01H1/00,C12N15/05
(31) Priority Document No :61/330922
(32) Priority Date :04/05/2010
(33) Name of priority country :U.S.A.
(86) International Application No :PCT/IB2011/051919
Filing Date :02/05/2011
(87) International Publication No :WO/2011/145015
(61) Patent of Addition to Application Number :NA
Filing Date :NA
(62) Divisional to Application Number :NA
Filing Date :NA

(71)**Name of Applicant :**
1)BASF SE
Address of Applicant :67056 Ludwigshafen Germany
(72)**Name of Inventor :**
1)MIETZNER Thomas
2)WITSCHEL Matthias
3)HUTZLER Johannes
4)EHRHARDT Thomas
5)TRESCH Stefan

(57) Abstract :
The present invention refers to a method for controlling undesired vegetation at a plant cultivation site. The method comprises the steps of providing at said site a plant that comprises at least one nucleic acid comprising a nucleotide sequence encoding a wild-type hydroxyphenyl pyruvate dioxygenase or a mutated hydroxyphenyl pyruvate dioxygenase (mut-HPPD) which is resistant or tolerant to a coumarone-derivative herbicide and/or a nucleotide sequence encoding a wild-type homogentisate solanesyl transferase or a mutated homogentisate solanesyl tranferase (mut-HST) which is resistant or tolerant to a coumarone derivative herbicide and then applying an effective amount of said herbicide to said plant cultivation site. The invention further refers to plants comprising mut-HPPD and to methods of obtaining such plants.

No. of Pages : 79 No. of Claims : 23

(12) PATENT APPLICATION PUBLICATION
(19) INDIA
(22) Date of filing of Application :26/11/2012
(21) Application No.9920/CHENP/2012 A
(43) Publication Date : 19/12/2014

(54) Title of the invention : METHOD AND APPARATUS OF PROBABILISTIC PROGRAMMING MULTI-LEVEL MEMORY IN CLUSTER STATES OF BI-STABLE ELEMENTS

(51) International classification :G11C11/16,G11C11/56
(31) Priority Document No :61/331,929
(32) Priority Date :06/05/2010
(33) Name of priority country :U.S.A.
(86) International Application No :PCT/US2011/035568
Filing Date :06/05/2011
(87) International Publication No :WO 2011/140471
(61) Patent of Addition to Application Number :NA
Filing Date :NA
(62) Divisional to Application Number :NA
Filing Date :NA

(71)**Name of Applicant :**
1)QUALCOMM INCORPORATED
Address of Applicant :Attn: International IP Administration 5775 Morehouse Drive San Diego California 92121-1714 United States of America
(72)**Name of Inventor :**
1)WU Wenqing
2)YUEN Kendrick H.
3)ZHU Xiaochun
4)KANG Seung H.
5)NOWAK Matthew Michael
6)LEVIN Jeffrey A.
7)GILMORE Robert
8)YU Nicholas

(57) Abstract :
A probabilistic programming current is injected into a cluster of bi-stable probabilistic switching elements the probabilistic programming current having parameters set to result in a less than unity probability of any given bi-stable switching element switching and a resistance of the cluster of bi-stable switching elements is detected. The probabilistic programming current is injected and the resistance of the cluster state detected until a termination condition is met. Optionally the termination condition is detecting the resistance of the cluster of bi-stable switching elements at a value representing a multi-bit data.

No. of Pages : 60 No. of Claims : 63

(12) PATENT APPLICATION PUBLICATION
(19) INDIA
(22) Date of filing of Application :12/12/2013
(21) Application No.9864/CHENP/2013 A
(43) Publication Date : 19/12/2014

(54) Title of the invention : DYNAMIC ANTENNA SHARING

(51) International classification :H04B1/40,H04W88/06
(31) Priority Document No :61/501679
(32) Priority Date :27/06/2011
(33) Name of priority country :U.S.A.
(86) International Application No :PCT/US2012/043629
Filing Date :21/06/2012
(87) International Publication No :WO 2013/003206
(61) Patent of Addition to Application Number :NA
Filing Date :NA
(62) Divisional to Application Number :NA
Filing Date :NA

(71)**Name of Applicant :**
1)QUALCOMM INCORPORATED
Address of Applicant :Attn.: International IP Administration 5775 Morehouse Drive San Diego California 92121 1714 U.S.A.
(72)**Name of Inventor :**
1)HUSTED Paul
2)HIRSCH Olaf J.

(57) Abstract :
A mobile communication device capable of dynamically sharing antennas is disclosed. The mobile communication device includes a wireless local area network (WLAN) control circuit to generate a Wi Fi signal a Bluetooth control circuit to generate a Bluetooth signal and a cellular control circuit to generate a cellular data signal. The Wi Fi and Bluetooth control circuits are coupled to a first antenna while the cellular control signal is coupled to a second antenna. The mobile communication device further includes an antenna sharing logic coupled between the control circuits and the first and second antennas. The antenna sharing logic is configured to selectively couple either the Wi Fi control circuit or the Bluetooth control circuit to the second antenna based at least in part on a level of activity of the cellular control circuit.

No. of Pages : 24 No. of Claims : 20

(12) PATENT APPLICATION PUBLICATION
(19) INDIA
(22) Date of filing of Application :06/12/2013
(21) Application No.9746/CHENP/2013 A
(43) Publication Date : 19/12/2014

(54) Title of the invention : UNLOCKING A RESPIRATORY THERAPY MODE

(51) International classification :A61M16/00
(31) Priority Document No :61/497239
(32) Priority Date :15/06/2011
(33) Name of priority country :U.S.A.
(86) International Application No :PCT/IB2012/052976
Filing Date :13/06/2012
(87) International Publication No :WO 2012/172491
(61) Patent of Addition to Application Number :NA
Filing Date :NA
(62) Divisional to Application Number :NA
Filing Date :NA

(71)**Name of Applicant :**
1)KONINKLIJKE PHILIPS N.V.
Address of Applicant :High Tech Campus 5 NL 5656 AE Eindhoven Netherlands
(72)**Name of Inventor :**
1)DANGELO Mark
2)PUJOL John Raymond

(57) Abstract :
A respiratory therapy device is configured e.g. by a care provider such that a second therapy mode different from the current therapy mode is unlocked under predetermined circumstances and a third therapy mode different from the current and the second therapy mode is unlocked under predetermined circumstances. The user of a given respiratory therapy device may activate the unlocked second or third therapy mode. The second or the third therapy mode may expire after a predetermined amount of usage and be deactivated.

No. of Pages : 38 No. of Claims : 19

(12) PATENT APPLICATION PUBLICATION
(19) INDIA
(22) Date of filing of Application :30/08/2012
(21) Application No.7498/CHENP/2012 A
(43) Publication Date : 19/12/2014

(54) Title of the invention : METHOD TO MANAGE MEMBERS OF AT LEAST ONE GROUP OF DECODERS HAVING ACCESS TO AUDIO/VIDEO DATA

(51) International classification :H04N7/167,G06F21/00,G11B20/00
(31) Priority Document No :10152660.6
(32) Priority Date :04/02/2010
(33) Name of priority country :EPO
(86) International Application No :PCT/EP2011/051202
Filing Date :28/01/2011
(87) International Publication No :WO/2011/095436
(61) Patent of Addition to Application Number :NA
Filing Date :NA
(62) Divisional to Application Number :NA
Filing Date :NA

(71)**Name of Applicant :**
1)NAGRAVISION S.A.
Address of Applicant :Route de Geneve 22-24 CH-1033 Cheseaux-sur-Lausanne Switzerland
(72)**Name of Inventor :**
1)GUY MOREILLON
2)ALEXANDRE KARLOV

(57) Abstract :
The present invention aims at proposing a method allowing a versatile management of a group of decoders, this group having conditional access to audio/video content. Accordingly, it is proposed a method to manage members of at least one group of decoders having access to audio/video data, each group member having the status of non-revoked or revoked member, and sharing a common broadcast encryption scheme allowing to revoke at least one member of the group by sending a group addressed message, comprising the steps of : In a stage for a decoder to become member of the group : - receiving and storing the keys pertaining to the position into the group according to the broadcast encryption scheme, - receiving and storing a current group access data (CGD) comprising at least a current group access key (CGK) common to said group, In a stage of accessing audio/video data : - using the current group access data (CGD) to directly or indirectly access to the audio/video data, In a stage of renewing the current group access key (CGK): - sending a first group message comprising at least a next group access data (NGAD) comprising at least a next group access key (NGAK) encrypted so that only the non-revoked decoders can access to it, said group message being further encrypted by the current group access key (CGK), - updating the current group access key with the next group access key.

No. of Pages : 20 No. of Claims : 5

(12) PATENT APPLICATION PUBLICATION
(19) INDIA
(22) Date of filing of Application :26/10/2012
(21) Application No.9134/CHENP/2012 A
(43) Publication Date : 19/12/2014

(54) Title of the invention : GENE-EXPRESSION PROFILING WITH REDUCED NUMBERS OF TRANSCRIPT MEASUREMENTS

(51) International classification :C40B30/00,C40B40/06,C40B40/08
(31) Priority Document No :61/321,298
(32) Priority Date :06/04/2010
(33) Name of priority country :U.S.A.
(86) International Application No :PCT/US2011/031395
Filing Date :06/04/2011
(87) International Publication No :WO/20011/127150
(61) Patent of Addition to Application Number :NA
Filing Date :NA
(62) Divisional to Application Number :NA
Filing Date :NA

(71)**Name of Applicant :**
1)MASSACHUSETTS INSTITUTE OF TECHNOLOGY
Address of Applicant :77 Massachusetts Avenue Cambridge MA 02139 United States of America
(72)**Name of Inventor :**
1)LAMB Justin
2)GOLUB Todd R.
3)SUBRAMANIAN Aravind
4)PECK David D.

(57) Abstract :
The present invention provides compositions and methods for making and using a transcriptome-wide gene-expression profiling platform that measures the expression levels of only a select subset of the total number of transcripts. Because gene expression is believed to be highly correlated direct measurement of a small number (for example 1 000) of appropriately- selected transcripts allows the expression levels of the remainder to be inferred. The present invention therefore has the potential to reduce the cost and increase the throughput of full- transcriptome gene-expression profiling relative to the well-known conventional approaches that require all transcripts to be measured.

No. of Pages : 131 No. of Claims : 59

(12) PATENT APPLICATION PUBLICATION
(19) INDIA
(22) Date of filing of Application :29/08/2014
(21) Application No.1854/KOLNP/2014 A
(43) Publication Date : 19/12/2014

(54) Title of the invention : METHOD FOR DRYING GRAIN

(51) International classification :F26B17/14
(31) Priority Document No :PCT/JP2012/055635
(32) Priority Date :06/03/2012
(33) Name of priority country :
(86) International Application No :PCT/JP2012/055635
Filing Date :06/03/2012
(87) International Publication No :WO 2013/132586
(61) Patent of Addition to Application Number :NA
Filing Date :NA
(62) Divisional to Application Number :NA
Filing Date :NA

(71)**Name of Applicant :**
1)SATAKE CORPORATION
Address of Applicant :7-2, Sotokanda 4-chome, Chiyoda-ku, Tokyo 1010021, JAPAN
(72)**Name of Inventor :**
1)FUJITOMO, Hirota

(57) Abstract :
The present invention relates to a method in which grain drying equipment that includes a plurality of serial stages of drying units which include hot-air dryers having hot-air drying parts, and grain elevators is used so as to turn raw grain into moisture-adjusted grain by passing the raw grain through the equipment once. In each of the drying units, the temperature of hot air is adjusted to a grain moisture value for outputting that is set in the stage. The moisture amount reduced in each stage is set as a moisture value to be achieved in each stage from the difference between the moisture value of the raw grain and a target moisture value. Also, the temperature of the hot air is determined from the difference between a grain moisture value at the time of receiving and the grain moisture value for outputting which is set in each stage. The temperature is calculated through an experiment, and preserved as a data table in a control unit. An appropriate temperature of the hot air is calculated therefrom.

FIG. 1

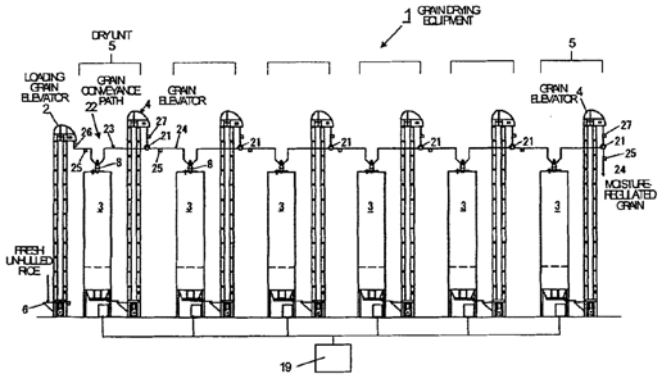

No. of Pages : 34 No. of Claims : 6

(12) PATENT APPLICATION PUBLICATION
(19) INDIA
(22) Date of filing of Application :29/08/2014

(21) Application No.1855/KOLNP/2014 A
(43) Publication Date : 19/12/2014

(54) Title of the invention : STRUCTURAL MEMBER USED IN RAINWATER STORAGE LAMINATED STRUCTURE

(51) International classification :E03F1/00,E03B3/03,E03B11/14
(31) Priority Document No :2012-056601
(32) Priority Date :14/03/2012
(33) Name of priority country :Japan
(86) International Application No :PCT/JP2012/083728
Filing Date :26/12/2012
(87) International Publication No :WO 2013/136630
(61) Patent of Addition to Application Number :NA
Filing Date :NA
(62) Divisional to Application Number :NA
Filing Date :NA

(71)**Name of Applicant :**
1)SEKISUI TECHNO MOLDING CO., LTD.
Address of Applicant :3-17, Toranomon 2-Chome, Minato-Ku, Tokyo 1058450 ,JAPAN
(72)**Name of Inventor :**
1)HARADA Fumio
2)YOSHIDA Takashi

(57) Abstract :
Provided is a structural member for constructing a rainwater storage laminated structure by vertically stacking the structural members in a water storage tank provided beneath the ground while crossing the structural members at right angles, the structural member capable of exhibiting strong compressive strength without being deformed by loads from above and below. A structural member (1) is formed by longitudinally and laterally arranging, on a bottom plate (2), hollow truncated quadrangular pyramids (3) formed by providing front, back, right and left inclined wall plate parts (3b-3d) downward from four edges of a rectangular top plate (3a) with the lower ends thereof open downward from the lower surface of the bottom plate (2), and configured such that a V-shaped middle groove part (5) is formed so as to divide the top plate part (3a) in two in the middle of each of the hollow truncated quadrangular pyramids (3), the groove bottom lower surface of the middle groove part (5) is supported on a pair of hollow protruding parts (4, 4) provided to protrude on the top plate part (3a) of the lower-side structural member (1), and engagement recessed parts (7, 7) formed in lower end middle sections of both side inclined wall plate parts (3c, 3c) are put on both ends of the top plate part (3a) of the lower-side structural member (1).

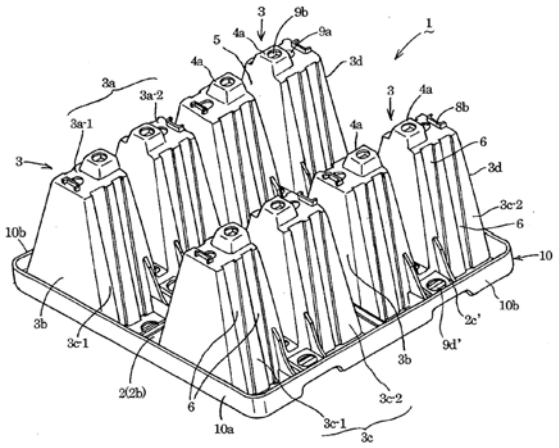

No. of Pages : 45 No. of Claims : 6

(12) PATENT APPLICATION PUBLICATION
(19) INDIA
(22) Date of filing of Application :29/08/2014

(21) Application No.1857/KOLNP/2014 A
(43) Publication Date : 19/12/2014

(54) Title of the invention : USE OF A LYSATE OF A CULTURE OF A BACTERIUM OF THE VITREOSCILLA SP. GENUS FOR PREVENTING AND/OR TREATING HYPERSEBORRHOEIC CONDITIONS OF THE SCALP

(51) International classification :A61K8/99,A61Q19/00
(31) Priority Document No :1252742
(32) Priority Date :27/03/2012
(33) Name of priority country :France
(86) International Application No :PCT/IB2013/052445
Filing Date :27/03/2013
(87) International Publication No :WO 2013/144869
(61) Patent of Addition to Application Number :NA
Filing Date :NA
(62) Divisional to Application Number :NA
Filing Date :NA

(71)**Name of Applicant :**
1)L'OREAL
Address of Applicant :14 rue Royale, F-75008 Paris FRANCE
(72)**Name of Inventor :**
1)GENARD, Sylvie

(57) Abstract :
The present invention relates to the cosmetic use of a lysate of a bacterium or bacteria belonging to the Vitreoscillasp. genus (in particular of the Vitreoscilla filiformis species) in a complete fermentation medium, as an active agent for preventing and/or treating hyperseborrhoeic conditions not associated with a dandruff condition of the scalp.

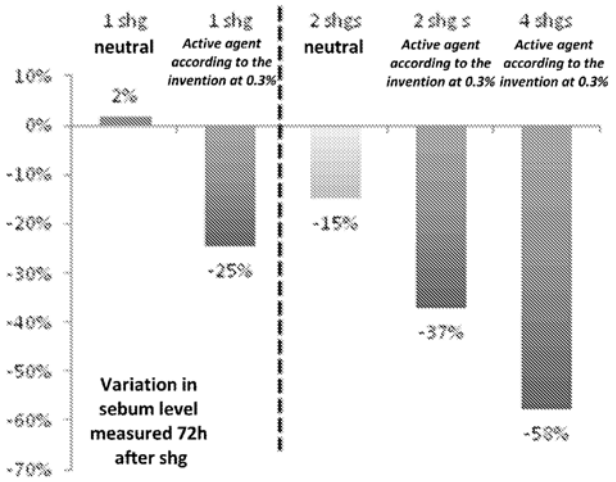

No. of Pages : 28 No. of Claims : 10

(12) PATENT APPLICATION PUBLICATION
(19) INDIA
(22) Date of filing of Application :29/08/2014

(21) Application No.1858/KOLNP/2014 A
(43) Publication Date : 19/12/2014

(54) Title of the invention : CONTACT MATERIAL SUITABLE FOR FUEL SENDER SLIDER, AND FUEL SENDER SLIDER

(51) International classification :C22C5/04,C22F1/14
(31) Priority Document No :2012-056607
(32) Priority Date :14/03/2012
(33) Name of priority country :Japan
(86) International Application No :PCT/JP2013/056735
Filing Date :12/03/2013
(87) International Publication No :WO 2013/137225
(61) Patent of Addition to Application Number :NA
Filing Date :NA
(62) Divisional to Application Number :NA
Filing Date :NA

(71)**Name of Applicant :**
1)TANAKA KIKINZOKU KOGYO K.K.
Address of Applicant :7-3, MARUNOUCHI 2-CHOME, CHIYODA-KU, TOKYO 1006422, JAPAN
(72)**Name of Inventor :**
1)KISHIMOTO, TAKAOMI
2)HORIUCHI, YOSHINORI
3)SAKAGUCHI, OSAMU
4)KASHIWAGI, KOUZOU

(57) Abstract :
Proposed is a contact material constituting a slider for a fuel sender, the slider moving on a conductor in conjunction with a float moving in accordance with a liquid level, wherein the contact material includes 10 to 25 mass% of nickel and a balance of palladium. The present contact material is useful in the light of material cost in addition to corrosion resistance and durability. The fuel sender is useful for vehicles, such as FFV, using composite fuel of alcohol and the like. The present invention allows for producing a slider for a fuel sender having excellent corrosion resistance and abrasion resistance.

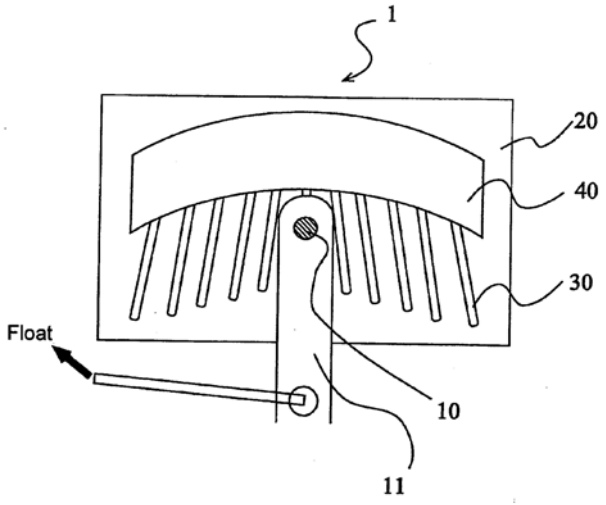

No. of Pages : 12 No. of Claims : 3

(12) PATENT APPLICATION PUBLICATION
(19) INDIA
(22) Date of filing of Application :19/07/2012
(21) Application No.1807/KOLNP/2012 A
(43) Publication Date : 19/12/2014

(54) Title of the invention : PROCESS FOR PRODUCING FLUORINE-CONTAINING ALKENE COMPOUND

(51) International classification :C07C17/23,C07C21/18
(31) Priority Document No :61/282,430
(32) Priority Date :12/02/2010
(33) Name of priority country :U.S.A.
(86) International Application No :PCT/JP2011/053062
Filing Date :08/02/2011
(87) International Publication No :WO 2011/099605
(61) Patent of Addition to Application Number :NA
Filing Date :NA
(62) Divisional to Application Number :NA
Filing Date :NA

(71)**Name of Applicant :**
1)DAIKIN INDUSTRIES, LTD.
Address of Applicant :Umeda Center Building, 4-12, Nakazaki-Nishi 2-Chome, Kita-ku, Osaka-shi, Osaka 5308323, JAPAN.
(72)**Name of Inventor :**
1)KARUBE, Daisuke
2)KOMATSU, Yuzo
3)SUZUKI, Atsushi

(57) Abstract :
The present invention provides a process for producing a fluorine-containing alkene of the general formula CF3 (CX2)nCF=CH2 wherein X each independently represents F or Cl, and n is an integer of 0 to 2. The process includes a first reaction step of allowing a specific chlorine containing compound to react with a fluorinating agent under increased pressure in a gas phase in the presence of at least one fluorination catalyst selected from the group consisting of chromium oxide and fluorinated chromium oxide, and a second reaction step of heating the product of the first reaction step in a gas phase under a pressure lower than the pressure in the first reaction step. The process of the present invention can produce a fluorine-containing alkene with a high selectivity with the use of a catalyst that can be easily handled, while suppressing production of by-products that cannot be easily converted into the target or separated.

No. of Pages : 28 No. of Claims : 9

(12) PATENT APPLICATION PUBLICATION
(19) INDIA
(22) Date of filing of Application :04/09/2014
(21) Application No.1895/KOLNP/2014 A
(43) Publication Date : 19/12/2014

(54) Title of the invention : COATING COMPOSITION AND COATING FILM OBTAINED FROM COATING COMPOSITION

(51) International classification	:C09D201/00,C09D5/00,C09D5/16
(31) Priority Document No	:2012-041239
(32) Priority Date	:28/02/2012
(33) Name of priority country	:Japan
(86) International Application No	:PCT/JP2013/055176
Filing Date	:27/02/2013
(87) International Publication No	:WO 2013/129488
(61) Patent of Addition to Application Number	:NA
Filing Date	:NA
(62) Divisional to Application Number	:NA
Filing Date	:NA

(71)**Name of Applicant :**
1)KANEKA CORPORATION
Address of Applicant :2-3-18, Nakanoshima, Kita-ku, Osaka-shi Osaka 5308288, JAPAN.
(72)**Name of Inventor :**
1)FUKAUMI, Hiroki
2)HAMAMURA, Takahiro
3)SONODA, Takeshi

(57) Abstract :
The present invention addresses the problem of maintaining the thermal barrier performance of an aqueous thermal barrier coating composition for a long period of time by developing an aqueous thermal barrier coating composition that is provided with low contamination properties for the purpose of suppressing deterioration in the thermal barrier performance caused by decrease in the solar reflectance due to adhesion of a contaminant in the atmosphere under outdoor exposure. The above-mentioned problem is solved by a resin composition for aqueous coating compositions, which contains (A1) a water-soluble and/or water-dispersible resin, (A2) a thermal barrier pigment, (B1) an organosilicate and/or a modified product thereof and (B2) a curing catalyst for promoting the hydrolysis-condensation reaction of an alkoxysilyl group.

No. of Pages : 80 No. of Claims : 9

(12) PATENT APPLICATION PUBLICATION
(19) INDIA
(22) Date of filing of Application :04/09/2014

(21) Application No.1896/KOLNP/2014 A
(43) Publication Date : 19/12/2014

(54) Title of the invention : PEST CONTROL COMPOSITION INCLUDING NOVEL IMINOPYRIDINE DERIVATIVE

(51) International classification :A01N43/40,C07D401/06,C07D213/46
(31) Priority Document No :2012-044514
(32) Priority Date :29/02/2012
(33) Name of priority country :Japan
(86) International Application No :PCT/JP2013/056051
Filing Date :27/02/2013
(87) International Publication No :WO 2013/129688
(61) Patent of Addition to Application Number :NA
Filing Date :NA
(62) Divisional to Application Number :NA
Filing Date :NA

(71)**Name of Applicant :**
1)MEIJI SEIKA PHARMA CO., LTD.
Address of Applicant :4-16, Kyobashi 2-chome, Chuo-ku, Tokyo, 1048002 ,JAPAN.
(72)**Name of Inventor :**
1)HORIKOSHI, Ryo
2)ONOZAKI, Yasumichi
3)NAKAMURA, Satoshi
4)NOMURA, Masahiro
5)MATSUMURA, Makoto
6)MITOMI, Masaaki

(57) Abstract :
Provided is a pest control composition containing a novel iminopyridine derivative and other pest control agents. Provided is a pest control composition containing an iminopyridine derivative represented by the following Formula (I) and at least one of other pest control agents: [Chemical Formula 1] [in the formula, Ar represents a 5- to 6-membered heterocycle which may be substituted, A represents a heterocycle having a 5- to 10-membered unsaturated bond including one or more nitrogen atoms, and has an imino group substituted with an R group at a position adjacent to the nitrogen atom present on the cycle, Y represents hydrogen, halogen and the like, and R represents any one of groups represented by the following Formulae (a) to (e), (y) or (z)]. [Chemical Formula 2]

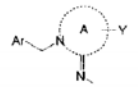

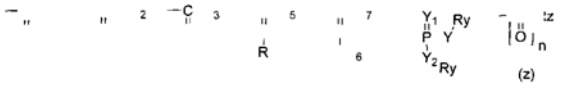

No. of Pages : 504 No. of Claims : 28

(12) PATENT APPLICATION PUBLICATION
(19) INDIA
(22) Date of filing of Application :04/09/2014

(21) Application No.1897/KOLNP/2014 A
(43) Publication Date : 19/12/2014

(54) Title of the invention : NITROGEN-CONTAINING HETEROCYCLIC DERIVATIVE HAVING 2-IMINO GROUP AND PEST CONTROL AGENT INCLUDING THE SAME

(51) International classification	:C07D213/74,C07D401/06,C07D405/06
(31) Priority Document No	:2012-043743
(32) Priority Date	:29/02/2012
(33) Name of priority country	:Japan
(86) International Application No Filing Date	:PCT/JP2013/056055 :27/02/2013
(87) International Publication No	:WO 2013/129692
(61) Patent of Addition to Application Number Filing Date	:NA :NA
(62) Divisional to Application Number Filing Date	:NA :NA

(71)**Name of Applicant :**
1)MEIJI SEIKA PHARMA CO., LTD.
Address of Applicant :4-16, Kyobashi 2-chome, Chuo-ku, Tokyo, 1048002 ,JAPAN.
(72)**Name of Inventor :**
1)KAGABU, Shinzo
2)MITOMI, Masaaki
3)KITSUDA, Shigeki
4)HORIKOSHI, Ryo
5)ONOZAKI, Yasumichi
6)NAKAMURA, Satoshi

(57) Abstract :
Provided is a nitrogen-containing heterocyclic derivative having a 2-imino group, which is represented by the following Formula (I). [Chemical Formula 1] [in the formula, Ar represents a phenyl group which may be substituted, a 5- to 6-membered heterocycle which may be substituted, or a 4- to 10-membered heterocycloalkyl group, A represents a heterocycle having a 5- to 10-membered unsaturated bond including one or more nitrogen atoms, and has an imino group substituted with an R group at a position adjacent to the nitrogen atom present on the cycle, Y represents a hydrogen atom, a halogen atom, a hydroxyl group, a C1 to C6 alkyl group which may be substituted with a halogen atom, a C1 to C6 alkyloxy group which may be substituted with a halogen atom, a cyano group, or a nitro group, and R represents any one of groups represented by the following Formulae (a) to (e), (y) or (z).] [Chemical Formula 2]

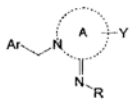

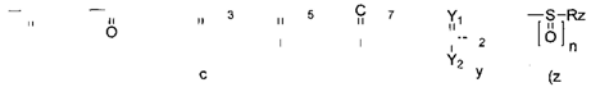

No. of Pages : 454 No. of Claims : 15

(12) PATENT APPLICATION PUBLICATION
(19) INDIA
(22) Date of filing of Application :27/08/2014

(21) Application No.1818/KOLNP/2014 A
(43) Publication Date : 19/12/2014

(54) Title of the invention : SERINE RACEMASE INHIBITOR

(51) International classification :A61K31/198,A61K31/167,A61P25/20
(31) Priority Document No :2012-015233
(32) Priority Date :27/01/2012
(33) Name of priority country :Japan
(86) International Application No :PCT/JP2013/051385
Filing Date :24/01/2013
(87) International Publication No :WO 2013/111798
(61) Patent of Addition to Application Number :NA
Filing Date :NA
(62) Divisional to Application Number :NA
Filing Date :NA

(71)**Name of Applicant :**
1)NATIONAL UNIVERSITY CORPORATION UNIVERSITY OF TOYAMA
Address of Applicant :3190, Gofuku, Toyama-shi, Toyama 9308555 YOKYO Japan
(72)**Name of Inventor :**
1)MORI Hisashi
2)TOYOOKA Naoki
3)MIZUGUCHI Mineyuki
4)OBITA Takayuki
5)HIRONO Syuichi
6)GODA Hiroaki

(57) Abstract :
[Problem] To provide a novel serine racemase inhibitor having a satisfactory activity and satisfactory specificity. [Solution] A serine racemase inhibitor comprising at least one compound selected from a compound group consisting of compounds respectively represented by general formulae [MM_1], [DR_1], [DR _1], [LW_1] and [ED_1] as an active ingredient.

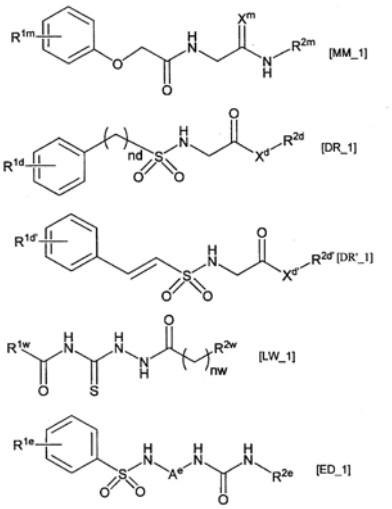

No. of Pages : 111 No. of Claims : 17

(12) PATENT APPLICATION PUBLICATION
(19) INDIA
(22) Date of filing of Application :27/08/2014
(21) Application No.1819/KOLNP/2014 A
(43) Publication Date : 19/12/2014

(54) Title of the invention : VEHICLE ARRESTING NET

(51) International classification :E01F13/02,E01F13/04,E01F13/12
(31) Priority Document No :61/596,860
(32) Priority Date :09/02/2012
(33) Name of priority country :U.S.A.
(86) International Application No :PCT/US2013/025512
Filing Date :11/02/2013
(87) International Publication No :WO 2013/120053
(61) Patent of Addition to Application Number :NA
Filing Date :NA
(62) Divisional to Application Number :NA
Filing Date :NA

(71)**Name of Applicant :**
1)ENGINEERED ARRESTING SYSTEMS CORPORATION
Address of Applicant :2550 Market Street, Aston, PA 19014 UNITED STATES OF AMERICA.
(72)**Name of Inventor :**
1)WITHERS, Robert
2)ORNER, Richard, L., Jr

(57) Abstract :
A gravity-lowered net (12) that is housed above the surface onto which it is to be used, and is lowered by sliding weights (20) that position the net to the correct height for use. Certain embodiments of the nets may be provided with one or more energy absorber elements (50) associated with the net, which help enhance the energy absorptive capabilities of the net.

No. of Pages : 23 No. of Claims : 14

(12) PATENT APPLICATION PUBLICATION
(19) INDIA
(22) Date of filing of Application :27/08/2014

(21) Application No.1820/KOLNP/2014 A
(43) Publication Date : 19/12/2014

(54) Title of the invention : INHALABLE PHARMACEUTICAL COMPOSITIONS

(51) International classification	:A61K9/00,A61K31/137,A61K31/46
(31) Priority Document No	:61/604,435
(32) Priority Date	:28/02/2012
(33) Name of priority country	:U.S.A.
(86) International Application No	:PCT/IB2013/000708
Filing Date	:28/02/2013
(87) International Publication No	:WO 2013/128283
(61) Patent of Addition to Application Number	:NA
Filing Date	:NA
(62) Divisional to Application Number	:NA
Filing Date	:NA

(71)**Name of Applicant :**
1)ICEUTICA HOLDINGS INC. BVI
Address of Applicant :Geneva Place, Waterfront Drive, P.O. Box 3469, Road Town, Tortola, VIRGIN ISLANDS UNITED KINGDOM.
(72)**Name of Inventor :**
1)BOSCH, H. William
2)CALLAHAN, Matthew
3)MEISER, Felix
4)NORRET, Marck
5)RUSSELL, Adrian

(57) Abstract :
Methods for making inhalable composite particles comprising a pharmaceutically-active agent, the method comprising: a) providing composite particles comprising a millable grinding matrix and a solid pharmaceutically-active agent, wherein the pharmaceutically-active agent has an median particle size on a volume average basis between 50 nm and 3 μm; and b) milling the composite particles in a mill without milling bodies for a time period sufficient to produce inhalable composite particles having a mass median aerodynamic diameter between 1 μm and 20 μm are described.

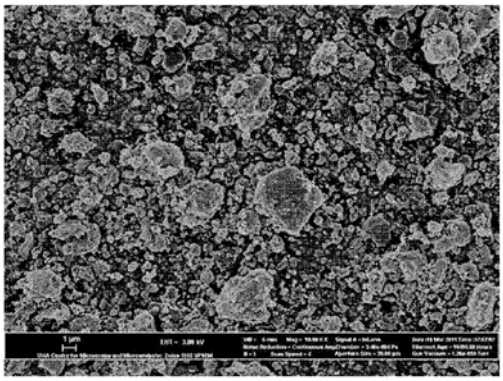

No. of Pages : 100 No. of Claims : 79

(12) PATENT APPLICATION PUBLICATION
(19) INDIA
(22) Date of filing of Application :05/09/2014

(21) Application No.1907/KOLNP/2014 A
(43) Publication Date : 19/12/2014

(54) Title of the invention : METHODS, COMPOSITIONS, AND DEVICES FOR SUPPLYING DIETARY FATTY ACID NEEDS

(51) International classification :A61K9/50
(31) Priority Document No :61/600,207
(32) Priority Date :17/02/2012
(33) Name of priority country :U.S.A.
(86) International Application No :PCT/US2013/026063
Filing Date :14/02/2013
(87) International Publication No :WO 2013/123139
(61) Patent of Addition to Application Number :NA
Filing Date :NA
(62) Divisional to Application Number :NA
Filing Date :NA

(71)**Name of Applicant :**
1)ALCRESTA, INC.
Address of Applicant :9700 One Newton Executive Park, Suite 202, Newton, MA 02462 UNITED STATES OF AMERICA.
(72)**Name of Inventor :**
1)MARGOLIN, Alexey, L.

(57) Abstract :
Nutritional formulas comprising long-chain polyunsaturated fatty acids (LC- PUFAs) are provided, along with methods and devices for preparing and/or administering nutritional formulas. In some embodiments, a percentage of the LC- PUFAs in the nutritional formula are in the form of monoglycerides and/or free fatty acids. In some embodiments, the nutritional formulas do not comprise added lipase. Also provided are methods for providing nutrition to a subject, methods for improving fat absorption, methods for improving cognitive ability, methods for preventing chronic lung disease, and methods for reducing the length of time a patient requires total parenteral nutrition.

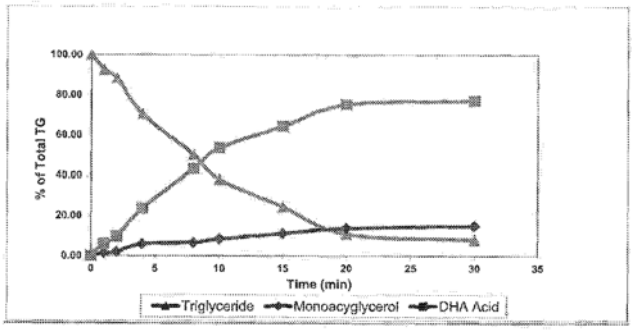

No. of Pages : 146 No. of Claims : 89

(12) PATENT APPLICATION PUBLICATION
(19) INDIA
(22) Date of filing of Application :05/09/2014

(21) Application No.1908/KOLNP/2014 A
(43) Publication Date : 19/12/2014

(54) Title of the invention : METHODS AND SYSTEMS FOR DETECTION OF MICROORGANISMS

(51) International classification :C12Q1/70,C12Q1/04,G01N33/53
(31) Priority Document No :61/601,231
(32) Priority Date :21/02/2012
(33) Name of priority country :U.S.A.
(86) International Application No :PCT/US2013/027155
Filing Date :21/02/2013
(87) International Publication No :WO 2013/126584
(61) Patent of Addition to Application Number :NA
Filing Date :NA
(62) Divisional to Application Number :NA
Filing Date :NA

(71)**Name of Applicant :**
1)LABORATORY CORPORATION OF AMERICA HOLDINGS
Address of Applicant :358 South Main Street, Burlington, North Carolina 27215,UNITED STATES OF AMERICA.
(72)**Name of Inventor :**
1)ANDERSON, Dwight Lyman
2)CONRAD, Andrew J.
3)ERICKSON, Stephen Eric
4)GIL, Jose S.
5)HOPKINS, Ben Barrett

(57) Abstract :
Disclosed are methods and systems for the isolation and detection of microbes from a sample. The use of binding agents for isolation of a microbe of interest from a sample are described. In certain embodiments, the methods use ribosome-based and/or bacteriophage-based amplification of the signal in detection of bacteria and other microorganisms. For example, embodiments of the present invention can achieve total amplification of at least 10,000 from a single infected cell.

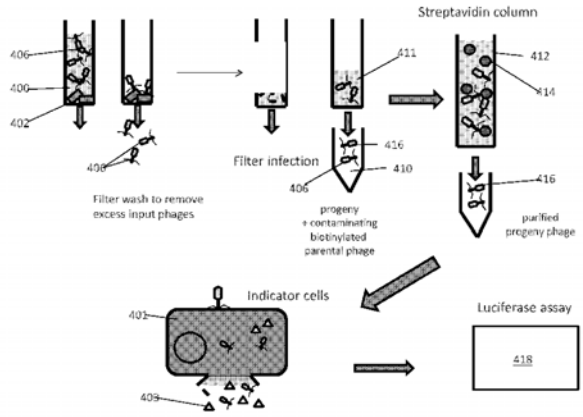

No. of Pages : 81 No. of Claims : 21

(12) PATENT APPLICATION PUBLICATION
(19) INDIA
(22) Date of filing of Application :05/09/2014
(21) Application No.1909/KOLNP/2014 A
(43) Publication Date : 19/12/2014

(54) Title of the invention : NETWORK BASED DETECTION AND MITIGATION OF HYBRID CLIENT DEVICE RECEPTION OUTAGE EVENTS

(51) International classification :H04W 76/02
(31) Priority Document No :61/685,891
(32) Priority Date :26/03/2012
(33) Name of priority country :U.S.A.
(86) International Application No :PCT/US2013/033939
Filing Date :26/03/2013
(87) International Publication No :WO 2013/148728
(61) Patent of Addition to Application Number :NA
Filing Date :NA
(62) Divisional to Application Number :NA
Filing Date :NA

(71)**Name of Applicant :**
1)APPLE, INC.
Address of Applicant :1 INFINITE LOOP, CUPERTINO, CA 95014,UNITED STATES OF AMERICA.
(72)**Name of Inventor :**
1)SHI, JIANXIONG
2)SEBENI, JOHNSON, O.
3)SU, LI
4)DAMJI, NAVID
5)FLYNN, PAUL, V.
6)VANGALA, SARMA, V.
7)VALLATH, SREEVALSAN
8)ELANGOVAN, THANIGAIVELU
9)JI, ZHU

(57) Abstract :
Methods and apparatus for network-based detection and mitigation of hybrid client device reception outage events. For example, in one embodiment, a cellular device uses a single-radio solution to support circuit-switched calls on a CDMA IX network and packet-switched calls on LTE. Periodically, the cellular device tunes away from LTE and monitors CDMA I X activity, and vice versa. During these tuned-away periods, the network adjusts operation to mitigate adverse effects (e.g., underutilization of radio resources, synchronization loss, etc.).

No. of Pages : 30 No. of Claims : 28

(12) PATENT APPLICATION PUBLICATION
(19) INDIA
(22) Date of filing of Application :27/08/2014

(21) Application No.1821/KOLNP/2014 A
(43) Publication Date : 19/12/2014

(54) Title of the invention : VACUUM REFINING METHOD OF MOLTEN STEEL

(51) International classification :C21C7/10,C21C7/00,C21C7/04
(31) Priority Document No :2012-058102
(32) Priority Date :15/03/2012
(33) Name of priority country :Japan
(86) International Application No :PCT/JP2013/056932
Filing Date :13/03/2013
(87) International Publication No :WO 2013/137292
(61) Patent of Addition to Application Number :NA
Filing Date :NA
(62) Divisional to Application Number :NA
Filing Date :NA

(71)**Name of Applicant :**
1)JFE STEEL CORPORATION
Address of Applicant :2-3, Uchisaiwai-cho 2-chome, Chiyoda-ku, Tokyo 1000011 JAPAN.
(72)**Name of Inventor :**
1)NAKAI Yoshie
2)OKUYAMA Goro
3)FUJII Yusuke
4)KIKUCHI Naoki
5)OGASAWARA Yasushi
6)MIKI Yuji

(57) Abstract :
In this vacuum refining method of molten steel, an oxide powder is heated with a flame formed in a burner at the tip of a top-blowing lance arranged in a vacuum degassing device, and said oxide powder is added by spraying upwards onto the bath surface of the molten steel in the degassing tank. By supplying to the aforementioned burner a fuel and combustion gas such that the expression below is satisfied, and forming a flame, melt temperature decreases and Mn loss during addition of Mn ore are suppressed, decarburization treatment is efficiently performed, and a low-carbon, high-manganese steel is melted; or, melt temperature decreases during addition of a desulfurizing agent are suppressed, desulfurization treatment is efficiently performed, and a low-sulfur steel is melted. 0.4 □ (G/F)/(G/F)st □ 1.1 (here, G: combustion gas supply rate (Nm3/min), F: fuel supply rate (Nm3/min), (G/F): oxygen combustion ratio (=combustion gas supply rate / fuel supply rate), (G/F)st: stoichiometric value of the oxy-fuel ratio of completely combusting fuel)

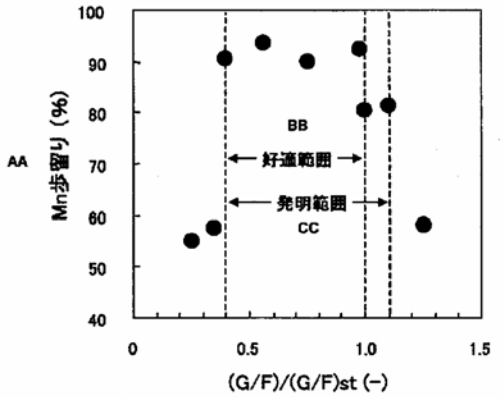

No. of Pages : 38 No. of Claims : 4

(12) PATENT APPLICATION PUBLICATION
(19) INDIA
(22) Date of filing of Application :27/08/2014

(21) Application No.1822/KOLNP/2014 A
(43) Publication Date : 19/12/2014

(54) Title of the invention : TUBE PERFORMANCE COMPARISON/DISPLAY DEVICE

(51) International classification :G01N3/20
(31) Priority Document No :2012-056445
(32) Priority Date :13/03/2012
(33) Name of priority country :Japan
(86) International Application No :PCT/JP2013/054133
Filing Date :20/02/2013
(87) International Publication No :WO 2013/136927
(61) Patent of Addition to Application Number :NA
Filing Date :NA
(62) Divisional to Application Number :NA
Filing Date :NA

(71)**Name of Applicant :**
1)TOYOX CO., LTD.
Address of Applicant :4371, Maezawa, Kurobe-shi, Toyama 9388585, JAPAN.
(72)**Name of Inventor :**
1)MIZUNO Fumio

(57) Abstract :
The present invention simply and clearly distinguishes shape retention such as anti-bending performance or anti-twisting performance of a tube that is the subject of comparison. One end (B1, C1) of a plurality of tubes (B, C) having the same length and different shape retention are attached to a first holding section (1), while at the same time the other ends thereof (B2, C2) are attached to a second holding section (2) in a manner so that the tube (B, C) bends at the same curvature. By means of moving one of the first holding section (1) or the second holding section (2) or relatively moving both the first holding section (1) and the second holding section (2) by means of a moving means (3), the tubes (B,C) are simultaneously further bent by the same amount in the direction of bending of each, and failure accompanying bending or twisting arises at some portion of the tubes (B, C).

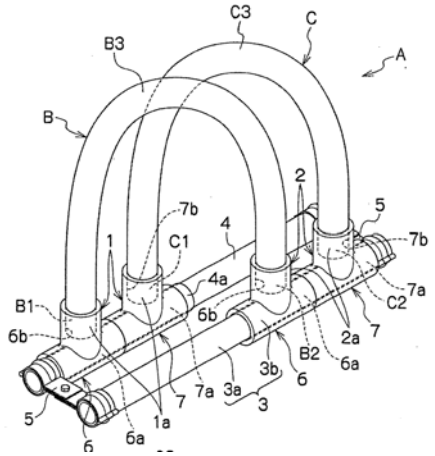

No. of Pages : 24 No. of Claims : 4

(12) PATENT APPLICATION PUBLICATION
(19) INDIA
(22) Date of filing of Application :27/08/2014

(21) Application No.1823/KOLNP/2014 A
(43) Publication Date : 19/12/2014

(54) Title of the invention : METHOD FOR PRODUCING NON-ORIENTED MAGNETIC STEEL SHEET

(51) International classification :C21D8/12,C22C38/00,C22C38/06
(31) Priority Document No :2012-058429
(32) Priority Date :15/03/2012
(33) Name of priority country :Japan
(86) International Application No :PCT/JP2013/056228
Filing Date :07/03/2013
(87) International Publication No :WO 2013/137092
(61) Patent of Addition to Application Number :NA
Filing Date :NA
(62) Divisional to Application Number :NA
Filing Date :NA

(71)**Name of Applicant :**
1)JFE STEEL CORPORATION
Address of Applicant :2-3, Uchisaiwai-cho 2-chome, Chiyoda-ku, Tokyo 1000011, JAPAN.
(72)**Name of Inventor :**
1)ZAIZEN, Yoshiaki
2)ODA, Yoshihiko
3)TODA, Hiroaki
4)NAKANISHI, Tadashi

(57) Abstract :
A method for producing a non-oriented magnetic steel sheet having a high magnetic flux density and little iron loss, said method comprising: hot rolling a steel slab which comprises 0.005 mass% or less of C, 4 mass% or less of Si, 0.03-3 mass% of Mn, 3 mass% or less of Al, 0.03-0.2 mass% of P, 0.005 mass% or less of S, 0.005 mass% or less of N, 0.0005-0.01 mass% of Ca, with an atomic ratio of Ca to S [Ca (mass%)/40]/[S (mass%)/32] being 0.5-3.5, and the balance made up of Fe and unavoidable impurities; hot-rolled annealing the same; cold rolling the same; and then recrystallization annealing the same by heating to at least 740oC at an average temperature rising speed of 100oC/sec or higher.

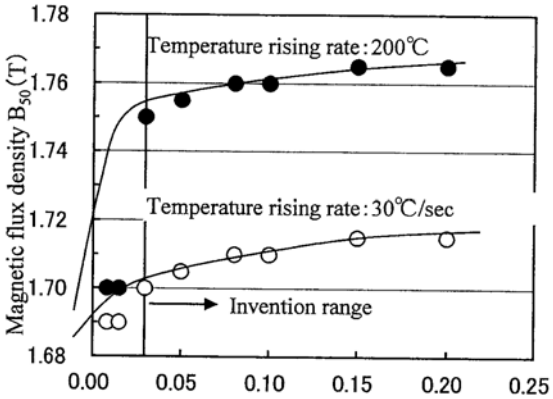

No. of Pages : 18 No. of Claims : 2

(12) PATENT APPLICATION PUBLICATION
(19) INDIA
(22) Date of filing of Application :08/09/2014

(21) Application No.1916/KOLNP/2014 A
(43) Publication Date : 19/12/2014

(54) Title of the invention : A BRAZE ALLOY LAYERED PRODUCT

(51) International classification :B23K35/00,B23K35/02,B23K35/365
(31) Priority Document No :12161742.7
(32) Priority Date :28/03/2012
(33) Name of priority country :EPO
(86) International Application No :PCT/EP2013/056529
Filing Date :27/03/2013
(87) International Publication No :WO 2013/144210
(61) Patent of Addition to Application Number :NA
Filing Date :NA
(62) Divisional to Application Number :NA
Filing Date :NA

(71)**Name of Applicant :**
1)ALFA LAVAL CORPORATE AB
Address of Applicant :Box 73, S-22100 Lund, SWEDEN.
(72)**Name of Inventor :**
1)SJÖDIN, Per
2)WALTER, Kristian

(57) Abstract :
The present invention relates to a method for providing a braze alloy layered product comprising the following steps: - applying at least one silicon source and at least one boron source on at least a part of a surface of a substrate, wherein the at least one boron source and the at least one silicon source are oxygen free except for inevitable amounts of contaminating oxygen, and wherein the substrate comprises a parent material having a solidus temperature above 1100 °C; - heating the substrate having the applied boron source and the applied silicon source to a temperature lower than the solidus temperature of the parent material of the substrate; and cooling the substrate having the applied boron source and the applied silicon source, and obtaining the braze alloy layered product. The present invention relates further to a braze alloy layered product, a method for providing a brazed product, a method for providing a coated product, and uses of the braze alloy layered product.

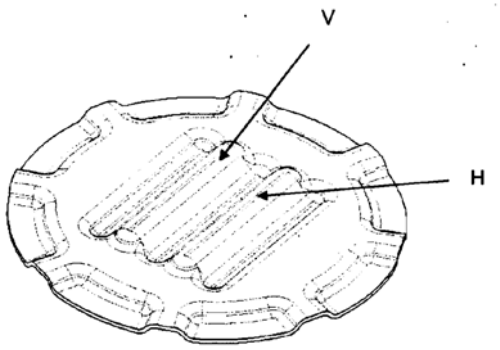

No. of Pages : 66 No. of Claims : 44

(12) PATENT APPLICATION PUBLICATION
(19) INDIA
(22) Date of filing of Application :28/08/2014

(21) Application No.1834/KOLNP/2014 A
(43) Publication Date : 19/12/2014

(54) Title of the invention : SHAPED REFRACTORY AND PROCESS FOR PRODUCING SAME

(51) International classification	:C04B 41/85,B22D41/02
(31) Priority Document No	:2012-047485
(32) Priority Date	:05/03/2012
(33) Name of priority country	:Japan
(86) International Application No	:PCT/JP2013/055871
Filing Date	:04/03/2013
(87) International Publication No	:WO 2013/133222
(61) Patent of Addition to Application Number	:NA
Filing Date	:NA
(62) Divisional to Application Number	:NA
Filing Date	:NA

(71)**Name of Applicant :**
1)JFE STEEL CORPORATION
Address of Applicant :2-3, UCHISAIWAI-CHO 2-CHOME, CHIYODA-KU, TOKYO 1000011 JAPAN.
(72)**Name of Inventor :**
1)KIYOTA YOSHISATO

(57) Abstract :
It is to provide a refractory having excellent corrosion resistance and economic efficiency. The shaped refractory is made from a fired refractory and an oxide powder, characterized in that a pore volume/pore diameter distribution curve of the shaped refractory has a maximum peak at a pore diameter of not less than 10 μm in a central part located at least 5 mm inward from the surface of the shaped refractory in a normal direction and also a pore volume peak within a pore diameter range of 0.051.0 μm because agglomerates of the oxide powder are formed in the pores of the fired refractory.

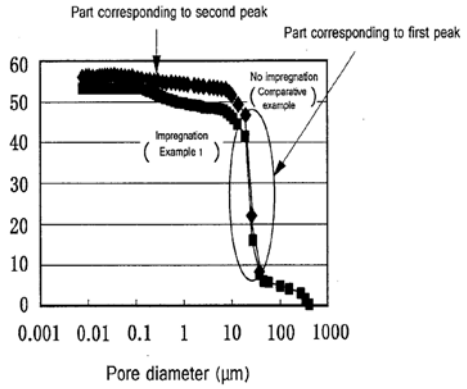

No. of Pages : 26 No. of Claims : 10

(12) PATENT APPLICATION PUBLICATION
(19) INDIA
(22) Date of filing of Application :28/08/2014
(21) Application No.1835/KOLNP/2014 A
(43) Publication Date : 19/12/2014

(54) Title of the invention : METHOD FOR PRODUCING PARTICLES, TONER, DEVELOPER, AND IMAGE FORMING APPARATUS

(51) International classification	:G03G 9/087,B01J2/02
(31) Priority Document No	:2012-069361
(32) Priority Date	:26/03/2012
(33) Name of priority country	:Japan
(86) International Application No	:PCT/JP2013/058198
Filing Date	:14/03/2013
(87) International Publication No	:WO 2013/146558
(61) Patent of Addition to Application Number	:NA
Filing Date	:NA
(62) Divisional to Application Number	:NA
Filing Date	:NA

(71)**Name of Applicant :**
1)RICOH COMPANY, LTD.
Address of Applicant :3-6, NAKAMAGOME 1-CHOME, OHTA-KU, TOKYO, 1438555 JAPAN.
(72)**Name of Inventor :**
1)OSAKA, KEIKO
2)TANAKA, CHIAKI

(57) Abstract :
To provide a method for producing particles, which contains: bringing a first compressive fluid and raw materials containing a pressure plastic material into contact with each other to melt the pressure plastic material; and jetting a melt obtained by melting the pressure plastic material, with supplying a second compressive fluid containing nitrogen to the melt, to thereby form particles.

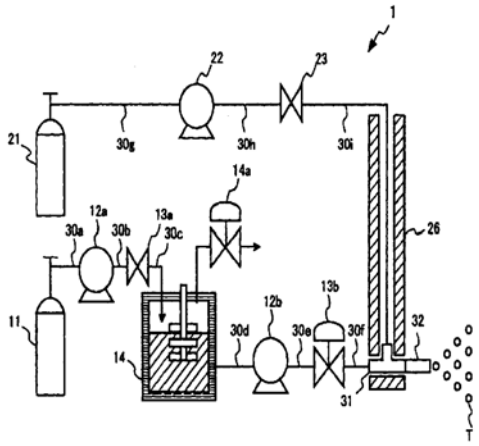

No. of Pages : 93 No. of Claims : 15

(12) PATENT APPLICATION PUBLICATION
(19) INDIA
(22) Date of filing of Application :28/08/2014

(21) Application No.1836/KOLNP/2014 A
(43) Publication Date : 19/12/2014

(54) Title of the invention : BALANCE WEIGHT FOR VEHICLE WHEELS

(51) International classification :F16F15/32,G01M1/32
(31) Priority Document No :12160442.5
(32) Priority Date :20/03/2012
(33) Name of priority country :EPO
(86) International Application No :PCT/EP2013/055592
Filing Date :18/03/2013
(87) International Publication No :WO 2013/139751
(61) Patent of Addition to Application Number :NA
Filing Date :NA
(62) Divisional to Application Number :NA
Filing Date :NA

(71)**Name of Applicant :**
1)WEGMANN AUTOMOTIVE GMBH & CO. KG
Address of Applicant :Rudolf-Diesel-Straße 6, 97209 Veitshöchheim GERMANY.
(72)**Name of Inventor :**
1)BÜRGEL, Hans-Ulrich
2)WAGENSCHEIN, Dietmar

(57) Abstract :
A balancing weight (100) for vehicle wheels has a first face (102) for fitting the balancing weight onto an inner peripheral surface of the wheel's rim and a second face (101) opposite the first face (102) In order to improve the handling including the feeding of the balancing weights (100) to a balancing machine each balancing weight (100) comprises at least one guideway (203,204,205) for a connecting means (303,304,305) for stacking a plurality of such balancing weights (100).

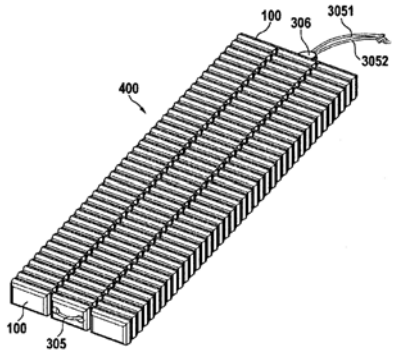

No. of Pages : 21 No. of Claims : 8

(12) PATENT APPLICATION PUBLICATION
(19) INDIA
(22) Date of filing of Application :10/09/2014

(21) Application No.1924/KOLNP/2014 A
(43) Publication Date : 19/12/2014

(54) Title of the invention : THREE-DIMENSIONAL OBJECT DETECTION DEVICE

(51) International classification :G08G1/16,G06T1/00,H04N7/18
(31) Priority Document No :2012-045349
(32) Priority Date :01/03/2012
(33) Name of priority country :Japan
(86) International Application No :PCT/JP2013/054853
Filing Date :26/02/2013
(87) International Publication No :WO 2013/129352
(61) Patent of Addition to Application Number :NA
Filing Date :NA
(62) Divisional to Application Number :NA
Filing Date :NA

(71)**Name of Applicant :**
1)NISSAN MOTOR CO., LTD.
Address of Applicant :2, Takara-cho, Kanagawa-ku, Yokohama-shi, Kanagawa 221-0023, JAPAN.
(72)**Name of Inventor :**
1)Yasuhisa HAYAKAWA
2)Osamu FUKATA

(57) Abstract :
The present invention is provided with: an imaging means (10) that images a predetermined area rearward of a host vehicle; an image conversion means (31) that converts the viewpoint of the captured image to an overhead view image; a three-dimensional object detection means (32, 33) that generates difference waveform information by counting and creating a frequency distribution of the number of pixels indicating a difference equal to or greater than a predetermined first threshold value in a difference image in which overhead view images taken at different times are aligned, and, if the difference waveform information is equal to or greater than a predetermined second threshold value, detects a three-dimensional object present in an adjacent lane on the basis of the difference waveform information; and a light source detection means (34) that detects a light source present rearward of the host vehicle. If the light source detection means (34) detects a light source, the first and second threshold values are set higher in a forward area farther ahead than a line that connects the light source and the imaging means (10) in the predetermined area, such that three-dimensional objects are more difficult to detect.

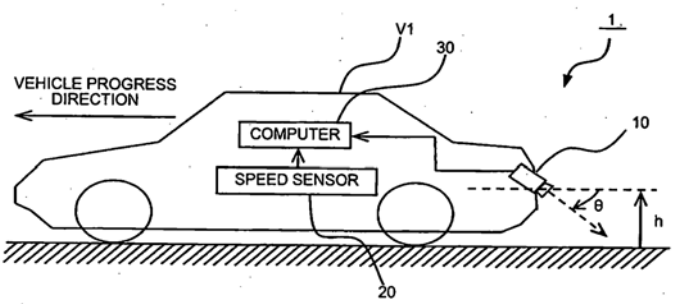

No. of Pages : 105 No. of Claims : 7

(12) PATENT APPLICATION PUBLICATION
(19) INDIA
(22) Date of filing of Application :10/09/2014

(21) Application No.1926/KOLNP/2014 A
(43) Publication Date : 19/12/2014

(54) Title of the invention : DATA, MULTIMEDIA & VIDEO TRANSMISSION UPDATING SYSTEM

(51) International classification :H04N7/26
(31) Priority Document No :2012900488
(32) Priority Date :10/02/2012
(33) Name of priority country :Australia
(86) International Application No :PCT/AU2013/000113
Filing Date :10/02/2013
(87) International Publication No :WO 2013/116906
(61) Patent of Addition to Application Number :NA
Filing Date :NA
(62) Divisional to Application Number :NA
Filing Date :NA

(71)**Name of Applicant :**
1)NAHLA, Ibrahim
Address of Applicant :1 Anglesea, 7 Mockridge Ave, Newington, New South Wales 2127 AUSTRALIA.
(72)**Name of Inventor :**
1)NAHLA, Ibrahim

(57) Abstract :
A data processing and communications system for communications between remote stations the apparatus comprising; a communications module; and a data processing module a power supply including a power source for generating power and a power link to said modules; a data and power link between the communications module and the data processing module to enable communications and mutual operations therebetween. A camera and MCU for each data transmission station is provided along with a frame comparator in the MCU to select characteristic frame image changes in an image transmission and means for ascertaining characteristic data/image changes based on comparison between each of a predetermined number of per second and next camera captures.

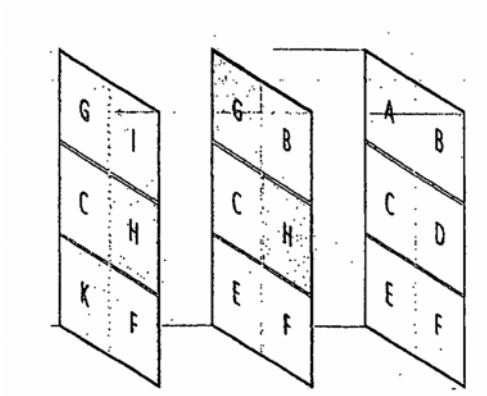

No. of Pages : 34 No. of Claims : 27

(12) PATENT APPLICATION PUBLICATION
(19) INDIA
(22) Date of filing of Application :11/05/2012

(21) Application No.1140/KOLNP/2012 A
(43) Publication Date : 19/12/2014

(54) Title of the invention : TEXT INPUT METHOD IN PORTABLE DEVICE AND PORTABLE DEVICE SUPPORTING THE SAME

(51) International classification :H04M1/23
(31) Priority Document No :102010-0022505
(32) Priority Date :12/03/2010
(33) Name of priority country :Republic of Korea
(86) International Application No :PCT/KR2011/001584
Filing Date :08/03/2011
(87) International Publication No :WO 2011/111976
(61) Patent of Addition to Application Number :NA
Filing Date :NA
(62) Divisional to Application Number :NA
Filing Date :NA

(71)**Name of Applicant :**
1)SAMSUNG ELECTRONICS CO., LTD
Address of Applicant :129, SAMSUNG-RO, YEONGTONG-GU, SUWON-SI GYEONGGI-DO, 443-742 **Republic of Korea**
(72)**Name of Inventor :**
1)SE HWAN PARK
2)SUNG WOOK PARK
3)HYUNG JUN KIM
4)JI HOON LEE

(57) Abstract :
A text input method in a portable device and a portable device supporting the same are provided. The portable device includes, a touch screen including a display unit for displaying a text input area and a text display area including at least one consonant and vowel, and a touch panel provided at an upper side of the display unit for generating a touch event, and a control unit for controlling text displayed according to a touch event generated from the touch screen, in which the control unit detects multi-touch events for at least two key icons output on the text input area, and controls the display of a specific text composed of a combination of the multi-touched key icons based on the detected multi-touch events.

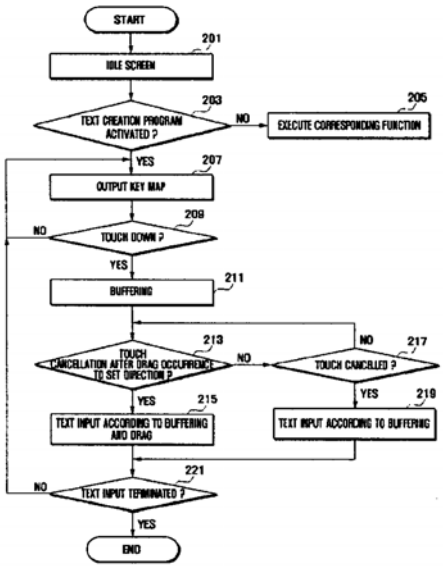

No. of Pages : 38 No. of Claims : 15

(12) PATENT APPLICATION PUBLICATION
(19) INDIA
(22) Date of filing of Application :28/08/2014
(21) Application No.1841/KOLNP/2014 A
(43) Publication Date : 19/12/2014

(54) Title of the invention : IRRIGATION SOURCE IDENTIFICATION SYSTEM

(51) International classification :A61M1/00,A61M3/02,A61J1/10
(31) Priority Document No :13/456,294
(32) Priority Date :26/04/2012
(33) Name of priority country :U.S.A.
(86) International Application No :PCT/US2013/033676
Filing Date :25/03/2013
(87) International Publication No:WO 2013/162805
(61) Patent of Addition to Application Number :NA
Filing Date :NA
(62) Divisional to Application Number :NA
Filing Date :NA

(71)**Name of Applicant :**
1)ALCON RESEARCH, LTD.
Address of Applicant :6201 South Freeway, TB4-8, Fort Worth, Texas 76134 UNITED STATES OF AMERICA.
(72)**Name of Inventor :**
1)GORDON, Raphael
2)ARTSYUKHOVICH, Alexander M.
3)SORENSEN, Gary P.
4)MORGAN, Michael D.
5)WILSON, Daniel J.

(57) Abstract :
An irrigation source identification system includes an irrigation source, an imaging device, and a processor. The irrigation source includes a container for holding a quantity of irrigation fluid and a port fluidly coupled to the container. The port has an outlet end and a neck. The neck has a plurality of protrusions selected from a grouping of protrusions. The plurality of protrusions provides a unique identifier for the container. An imaging device images the neck and the plurality of protrusions of the irrigation source, and the processor determines which identifier is associated with the image.

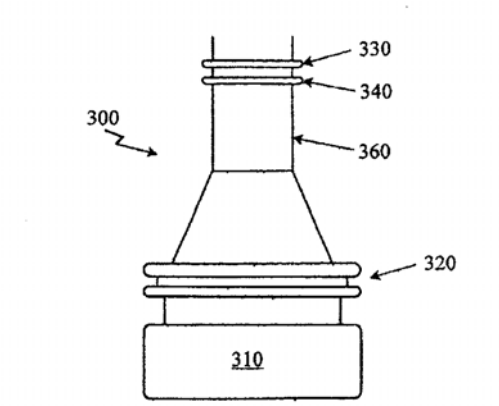

No. of Pages : 16 No. of Claims : 16

(12) PATENT APPLICATION PUBLICATION
(19) INDIA
(22) Date of filing of Application :28/08/2014

(21) Application No.1842/KOLNP/2014 A
(43) Publication Date : 19/12/2014

(54) Title of the invention : APPARATUS AND METHODS FOR SYNCHRONIZATION RECOVERY IN A HYBRID NETWORK

(51) International classification :H04W36/14,H04W88/06
(31) Priority Document No :61/618,608
(32) Priority Date :30/03/2012
(33) Name of priority country :U.S.A.
(86) International Application No :PCT/US2013/034497
Filing Date :28/03/2013
(87) International Publication No :WO 2013/162823
(61) Patent of Addition to Application Number :NA
Filing Date :NA
(62) Divisional to Application Number :NA
Filing Date :NA

(71)**Name of Applicant :**
1)APPLE INC.
Address of Applicant :1 INFINITE LOOP, CUPERTINO, CA 95014 UNITED STATES OF AMERICA.
(72)**Name of Inventor :**
1)ZHAO, WEN
2)WANG, Xiaowen
3)MAJJIGI, VINAY
4)FLYNN, PAUL
5)SONG, KEE-BONG
6)TABET, TARIK
7)KIM, Youngjae
8)MUJTABA, Syed
9)MUCKE, CHRISTIAN

(57) Abstract :
Methods and apparatus for synchronizing operational state during hybrid network operation. In one embodiment, the various access technologies that makeup the hybrid network not fully synchronized. Thus, a wireless device operating in a mixed mode must be capable of managing synchronization across multiple access technologies. The wireless device is configured to estimate an expected tune-away period when disengaging with a one access technology to address events (for example, link maintenance, calls, data, and the like) or perform monitoring on a second access technology. The estimate is then used by the device to adjust its operational parameters on the technology from which it is tuning away. This ensures smooth switching away from and back to the various network technologies.

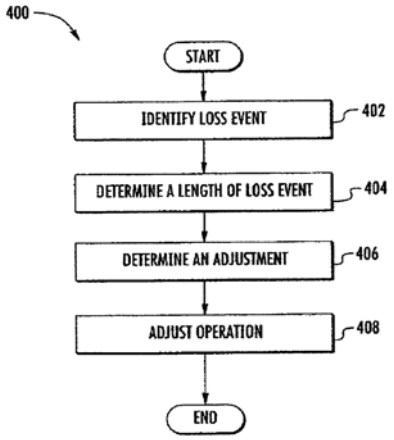

No. of Pages : 36 No. of Claims : 31

(12) PATENT APPLICATION PUBLICATION
(19) INDIA
(22) Date of filing of Application :28/08/2014
(21) Application No.1843/KOLNP/2014 A
(43) Publication Date : 19/12/2014

(54) Title of the invention : LARGE FORMAT ELECTROCHEMICAL ENERGY STORAGE DEVICE HOUSING AND MODULE

(51) International classification :H01M2/10,H01M10/02
(31) Priority Document No :61/611,416
(32) Priority Date :15/03/2012
(33) Name of priority country :U.S.A.
(86) International Application No :PCT/US2013/031220
Filing Date :14/03/2013
(87) International Publication No :WO 2013/138561
(61) Patent of Addition to Application Number :NA
Filing Date :NA
(62) Divisional to Application Number :NA
Filing Date :NA

(71)**Name of Applicant :**
1)AQUION ENERGY INC.
Address of Applicant :32 39th Street, Building A, Pittsburgh, PA 15201 UNITED STATES OF AMERICA.
(72)**Name of Inventor :**
1)WHITACRE, Jay
2)BLACKWOOD, David
3)WEBER, Eric
4)YANG, Wenzhuo
5)SHEEN, Eric
6)CAMPBELL, William
7)HUMPHREYS, Don
8)LYNCH-BELL, Edward

(57) Abstract :
An assembly includes non-load bearing housings, each housing including several cavities. Each cavity includes a stack of freely stacked electrochemical storage cells in the housings. Each electrochemical storage cell includes an anode electrode, a cathode electrode, and a separator located between the anode electrode and the cathode electrode. The assembly is configured such that pressure applied to the assembly is born by the freely stacked electrochemical storage cells.

No. of Pages : 59 No. of Claims : 30

(12) PATENT APPLICATION PUBLICATION
(19) INDIA
(22) Date of filing of Application :11/09/2014

(21) Application No.1934/KOLNP/2014 A
(43) Publication Date : 19/12/2014

(54) Title of the invention : INSTALLATION FOR TREATING A FUEL TO INCREASE ITS CALORIC POWER

(51) International classification :F02C7/22,F02M27/04,F23K5/08
(31) Priority Document No :a 2012 00164
(32) Priority Date :12/03/2012
(33) Name of priority country :Romania
(86) International Application No :PCT/RO2013/000006
Filing Date :05/03/2013
(87) International Publication No :WO 2013/184015
(61) Patent of Addition to Application Number :NA
Filing Date :NA
(62) Divisional to Application Number :NA
Filing Date :NA

(71)**Name of Applicant :**
1)ENACHE, Aurel
Address of Applicant :Ion Maiorescu Street no.16 bl. 33N1, 6th, apt. 22 RO-Ploiesti, Prahova County 100067 ROMANIA
(72)**Name of Inventor :**
1)ENACHE, Aurel

(57) Abstract :
The invention refers to an installation for treating fuels to increase their caloric power. The installation, according to the claimed invention has a housing (15) and a coupon (10) between which there are place some excitation units (A), each of these are attached to each of two wires (11 and 12) which follow a spiral path through the coupon (10).

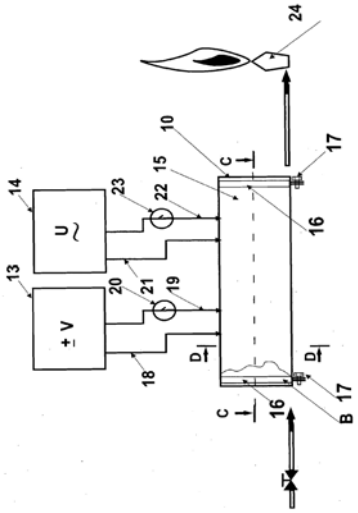

No. of Pages : 27 No. of Claims : 5

(12) PATENT APPLICATION PUBLICATION
(19) INDIA
(22) Date of filing of Application :08/05/2012
(21) Application No.1122/KOLNP/2012 A
(43) Publication Date : 19/12/2014

(54) Title of the invention : PROCESS FOR THE PREPARATION OF FOSAPREPITANT

(51) International classification :C07F 9/00
(31) Priority Document No :1255/KOL/2009
(32) Priority Date :15/10/2009
(33) Name of priority country :India
(86) International Application No :PCT/IN2010/000757
Filing Date :13/10/2010
(87) International Publication No : WO/2011/045817
(61) Patent of Addition to Application Number :NA
Filing Date :NA
(62) Divisional to Application Number :NA
Filing Date :NA

(71)**Name of Applicant :**
1)SANDOZ AG
Address of Applicant :Lichtstr 35 CH-4056 Basel Switzerland
(72)**Name of Inventor :**
1)JOSHI Shreerang
2)KHAN Rashid
3)DAS Tonmoy
4)LUTHRA Parven Kumar
5)AZIZ Syed

(57) Abstract :
The present invention relates to an improved process for the manufacture of phosphorylated Aprepitant and intermediate thereof. The present invention further relates to an improved process for the manufacture of Fosaprepitant dimeglumine from the said intermediate.

No. of Pages : 18 No. of Claims : 8

(12) PATENT APPLICATION PUBLICATION
(19) INDIA
(22) Date of filing of Application :09/09/2014

(21) Application No.1921/KOLNP/2014 A
(43) Publication Date : 19/12/2014

(54) Title of the invention : LIVER X RECEPTOR (LXR) MODULATORS FOR THE TREATMENT OF DERMAL DISEASES, DISORDERS AND CONDITIONS

(51) International classification	:C07D417/04,C07D413/04,A61K31/4155
(31) Priority Document No	:61/606,160
(32) Priority Date	:02/03/2012
(33) Name of priority country	:U.S.A.
(86) International Application No Filing Date	:PCT/US2013/028438 :28/02/2013
(87) International Publication No	:WO 2013/130892
(61) Patent of Addition to Application Number Filing Date	:NA :NA
(62) Divisional to Application Number Filing Date	:NA :NA

(71)**Name of Applicant :**
1)ALEXAR THERAPEUTICS, INC.
Address of Applicant :3125 Caminito Ricardo, Encinitas, California 92024 UNITED STATES OF AMERICA.
(72)**Name of Inventor :**
1)MOHAN, Raju

(57) Abstract :
Described herein are liver X receptor (LXR) modulators and methods of utilizing LXR modulators in the treatment of dermal diseases, disorders or conditions. Also described herein are pharmaceutical compositions containg such compounds.

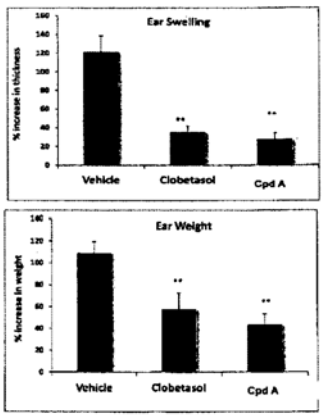

No. of Pages : 139 No. of Claims : 46

(12) PATENT APPLICATION PUBLICATION
(19) INDIA
(22) Date of filing of Application :10/09/2014

(21) Application No.1922/KOLNP/2014 A
(43) Publication Date : 19/12/2014

(54) Title of the invention : THREE-DIMENSIONAL OBJECT DETECTION DEVICE

(51) International classification :G06T1/00,B60R21/00,G08G1/16
(31) Priority Document No :2012-045356
(32) Priority Date :01/03/2012
(33) Name of priority country :Japan
(86) International Application No :PCT/JP2013/054857
Filing Date :26/02/2013
(87) International Publication No :WO 2013/129356
(61) Patent of Addition to Application Number :NA
Filing Date :NA
(62) Divisional to Application Number :NA
Filing Date :NA

(71)**Name of Applicant :**
1)NISSAN MOTOR CO. LTD.
Address of Applicant :2, Takara-cho, Kanagawa-ku, Yokohama-shi, Kanagawa 221-0023, JAPAN
(72)**Name of Inventor :**
1) Yasuhisa HAYAKAWA
2)Osamu FUKATA

(57) Abstract :
The present invention is provided with: a three dimensional object detection means (32 33) that generates difference waveform information on the basis of the number of pixels having a difference equal to or greater than a first threshold value in a difference image in which overhead view images taken at different times are aligned and detects a three dimensional object on the basis of the difference waveform information when the difference waveform information within a predetermined detection frame is equal to or greater than a second threshold value; a light source detection means (35) that detects a light source; a certainty determination means (34) that determines the certainty with which a light source is the headlight of another vehicle traveling in the next adjacent lane; and a control means (35) that if the certainty is equal to or greater than a predetermined value sets the first threshold value or the second threshold value such that a three dimensional object is more difficult to detect in a forward area farther ahead than a line connecting the light source and an imaging means (10) in the detection frame and if the certainty is less than the predetermined value sets the first threshold value or the second threshold value such that a three dimensional object is increasingly more difficult to detect towards the front end or the rear end from the center of the detection frame.

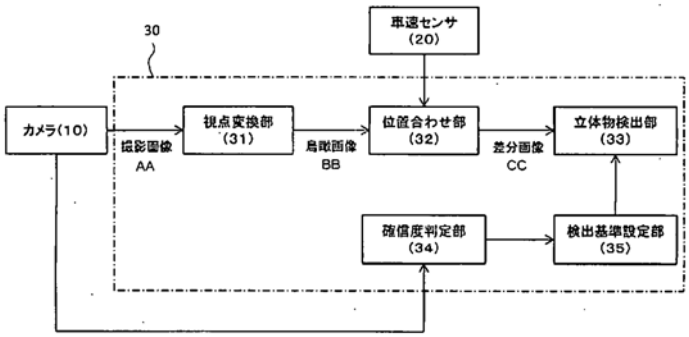

No. of Pages : 106 No. of Claims : 13

(12) PATENT APPLICATION PUBLICATION
(19) INDIA
(22) Date of filing of Application :10/09/2014

(21) Application No.1923/KOLNP/2014 A
(43) Publication Date : 19/12/2014

(54) Title of the invention : THREE-DIMENSIONAL OBJECT DETECTION DEVICE

(51) International classification :G08G1/16,B60R21/00,G06T1/00
(31) Priority Document No :2012-045352
(32) Priority Date :01/03/2012
(33) Name of priority country :Japan
(86) International Application No :PCT/JP2013/054855
Filing Date :26/02/2013
(87) International Publication No :WO 2013/129354
(61) Patent of Addition to Application Number :NA
Filing Date :NA
(62) Divisional to Application Number :NA
Filing Date :NA

(71)**Name of Applicant :**
1)NISSAN MOTOR CO., LTD.
Address of Applicant :2, Takara-cho, Kanagawa-ku, Yokohama-shi, Kanagawa 221-0023, JAPAN.
(72)**Name of Inventor :**
1)Osamu FUKATA
2)Yasuhisa HAYAKAWA

(57) Abstract :
Provided is a three dimensional object detection device comprising: an imaging means (10) that captures an image of a predetermined region behind a vehicle; an image conversion means (31) that converts the viewpoint of a captured image to that of a bird's eye view image; and three- dimensional object detection means (32, 33, 34) that align the positions of bird's eye view images taken at different times as a bird's eye view image, generate difference waveform information in the aligned bird's eye view image by counting and carrying out frequency distribution of quantities of pixels that indicate a difference that is greater than a predetermined first threshold, and when the difference waveform information within a detection frame set within the predetermined region is greater than a predetermined second threshold value, detect a three-dimensional object on the basis of the difference waveform information. The three-dimensional object detection device is characterized in that the first threshold value or the second threshold value is set low in the three-dimensional object detection means (32, 33, 34) so that, within the predetermined region, it is easier to detect a three-dimensional object in a rear region to the rear of a line that connects the light source detected by the light source detection means (34) and the imaging means (10) than it is to detect a three dimensional object in a front region to the front of said line.

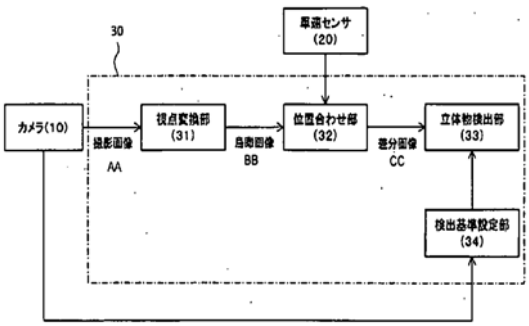

No. of Pages : 84 No. of Claims : 7

(12) PATENT APPLICATION PUBLICATION
(19) INDIA
(22) Date of filing of Application :29/08/2014

(21) Application No.1852/KOLNP/2014 A
(43) Publication Date : 19/12/2014

(54) Title of the invention : AN APPARATUS FOR THE CLEANING OF CRANKCASE GAS

(51) International classification :B01D45/14,B04B5/00,B04B9/00
(31) Priority Document No :12159278.6
(32) Priority Date :13/03/2012
(33) Name of priority country :EPO
(86) International Application No :PCT/EP2013/054880
Filing Date :11/03/2013
(87) International Publication No :WO 2013/135630
(61) Patent of Addition to Application Number :NA
Filing Date :NA
(62) Divisional to Application Number :NA
Filing Date :NA

(71)**Name of Applicant :**
1)ALFA LAVAL CORPORATE AB
Address of Applicant :P.O. Box 73, S-22100 Lund, SWEDEN
(72)**Name of Inventor :**
1)ANDERSSON AGINGER, Thomas
2)NYLEN, Lars-Göran

(57) Abstract :
The present invention relates to an apparatus (1) for the cleaning of crankcase gas from an internal combustion engine. The apparatus (1) has a housing (2) and a separation chamber (3) for the crankcase gas with a centrifugal rotor (4) which is arranged for the cleaning of the crankcase gas in the separation chamber (3). The centrifugal rotor (4) comprises a drive shaft (10) extending into a drive chamber (16) of the apparatus, wherein a turbine (17) is connected to the drive shaft (10). A nozzle (18) is arranged to receive pressurized liquid from the combustion engine and to direct the pressurized liquid in a jet (J) from a nozzle opening (19) against the turbine (17) for rotation of the centrifugal rotor (4). An adapter element (14) is configured such that the apparatus (1) is mountable onto the combustion engine with a drive liquid passage (22) in communication with the nozzle (18). The nozzle (18) is integrally formed with the adapter element (14) with a nozzle passage having a conical shape (25) which converges in the flow direction towards the nozzle opening (19).

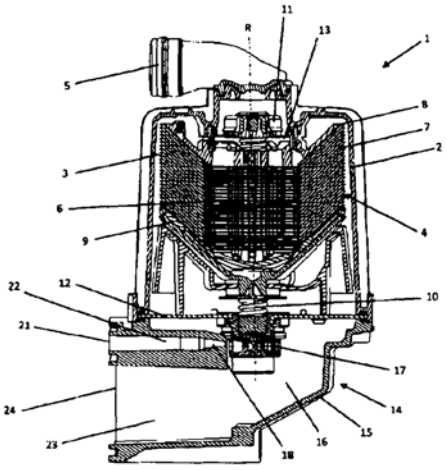

No. of Pages : 21 No. of Claims : 14

(12) PATENT APPLICATION PUBLICATION
(19) INDIA
(22) Date of filing of Application :29/08/2014

(21) Application No.1853/KOLNP/2014 A
(43) Publication Date : 19/12/2014

(54) Title of the invention : CONTAINER CLOSURE FOR VENTED POURING THROUGH AN ELONGATE APERTURE

(51) International classification :B67D3/00
(31) Priority Document No :
(32) Priority Date :
(33) Name of priority country :
(86) International Application No :PCT/US2012/036041
Filing Date :02/05/2012
(87) International Publication No :WO 2013/165404
(61) Patent of Addition to Application Number :NA
Filing Date :NA
(62) Divisional to Application Number :NA
Filing Date :NA

(71)**Name of Applicant :**
1)APTARGROUP, INC.
Address of Applicant :475 West Terra Cotta, Suite E, Crystal Lake, IL 60014-9695 UNITED STATES OF AMERICA.
(72)**Name of Inventor :**
1)WISNIEWSKI, John, M.

(57) Abstract :
A closure (20, 20A) is provided for a container that has an opening to the container interior wherein contents may be stored. The closure (20, 20A) includes the following: (A) a closure body (30, 30A) defining (i) apour aperture (50) that can communicate- with the container opening and that can accommodate pouring out of the contents through the pour aperture (50), and (ii) at least one vent aperture (60) that can communicate with the container opening and that can accommodate the in-venting of ambient atmosphere through the vent aperture (60) into the container, and (B) a lid (32, 32A) for closing the closure (20, 20A). The pour aperture (50) has an elongate configuration oriented along a central axis line (A) that bisects the pour aperture (50) and closure body (30).

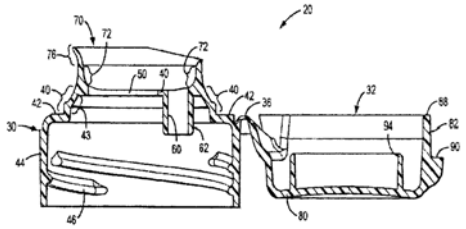

No. of Pages : 27 No. of Claims : 8

(12) PATENT APPLICATION PUBLICATION
(19) INDIA
(22) Date of filing of Application :11/09/2014
(21) Application No.1937/KOLNP/2014 A
(43) Publication Date : 19/12/2014

(54) Title of the invention : MODEL PREDICTING FRACTURING OF SHALE

(51) International classification :G01V 99/00
(31) Priority Document No :61/607,564
(32) Priority Date :06/03/2012
(33) Name of priority country :U.S.A.
(86) International Application No :PCT/US2013/029445
Filing Date :06/03/2013
(87) International Publication No :WO 2013/134427
(61) Patent of Addition to Application Number :NA
Filing Date :NA
(62) Divisional to Application Number :NA
Filing Date :NA

(71)**Name of Applicant :**
1)ION GEOPHYSICAL CORPORATION
Address of Applicant :2105 CITYWEST BOULEVARD, SUITE 400, HOUSTON, TX 77042 UNITED STATES OF AMERICA.
(72)**Name of Inventor :**
1)GLINSKY, MICHAEL, E.

(57) Abstract :
A model for predicting fracturing in shale can minimize surface disruption, protect groundwater, maximize efficiency of hydraulic fracturing, and manage fluids used in unconventional gas development. The model provides a more comprehensive understanding of the geological, geophysical, and geomechanical properties of shales and imbeds these properties in geomechanical computer simulations to predict both the reservoir performance from the fracturing, and the associated microseismic events generated by fracturing. Since the geological and geophysical properties can be estimated from surface seismic, well logs, and geologic concepts with regional context; the performance of the fracturing can be predicted and optimized. Since the microseismic events can be predicted with the model, the simulations can be verified and the model can be updated to be consistent with the observed microseismic.

No. of Pages : 42 No. of Claims : 21

(12) PATENT APPLICATION PUBLICATION
(19) INDIA
(22) Date of filing of Application :11/09/2014
(21) Application No.1938/KOLNP/2014 A
(43) Publication Date : 19/12/2014

(54) Title of the invention : NOVEL COMBINATIONS FOR TREATING ACUTE MYELOID LEUKAEMIA OR CHRONIC MYELOID LEUKAEMIA

(51) International classification :A61K31/704,A61K31/7068
(31) Priority Document No :12305295.3
(32) Priority Date :14/03/2012
(33) Name of priority country :EPO
(86) International Application No :PCT/EP2013/055137
Filing Date :13/03/2013
(87) International Publication No :WO 2013/135766
(61) Patent of Addition to Application Number :NA
Filing Date :NA
(62) Divisional to Application Number :NA
Filing Date :NA

(71)**Name of Applicant :**
1)SANOFI
Address of Applicant :54, rue La Boétie, F-75008 Paris FRANCE.
(72)**Name of Inventor :**
1)BOURRIE, Bernard
2)CASELLAS, Pierre
3)COSNIER-PUCHEU, Sylvie
4)JEGHAM, Samir
5)PERREAUT, Pierre

(57) Abstract :
The present invention relates to combinations of N-[2-(2,l,3-benzothiadiazol-5- ylamino)-6-(2,6-dichlorophenyl)pyrido[2,3-d]pyrimidin-7-yl]-N(l,l-dimethylethyl)-urea and cytarabine and their use for treating AML or CML.

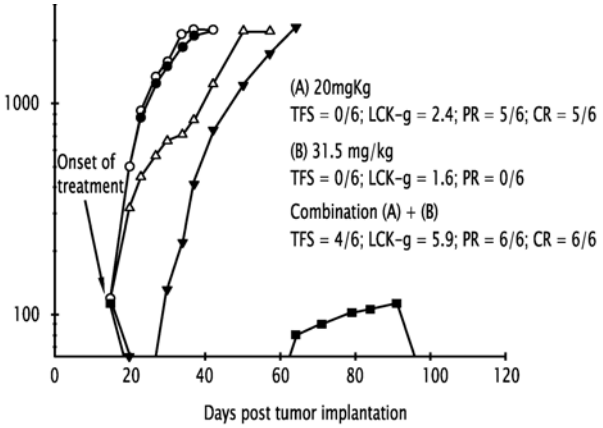

No. of Pages : 29 No. of Claims : 20

(12) PATENT APPLICATION PUBLICATION
(19) INDIA
(22) Date of filing of Application :29/08/2014
(21) Application No.1859/KOLNP/2014 A
(43) Publication Date : 19/12/2014

(54) Title of the invention : POLYMERIZATION REACTOR AND METHOD FOR MANUFACTURING WATER-ABSORBING RESIN

(51) International classification :C08F2/01,B01J19/00,C08F20/00
(31) Priority Document No :2012-075923
(32) Priority Date :29/03/2012
(33) Name of priority country :Japan
(86) International Application No :PCT/JP2013/058618
Filing Date :25/03/2013
(87) International Publication No :WO 2013/146699
(61) Patent of Addition to Application Number :NA
Filing Date :NA
(62) Divisional to Application Number :NA
Filing Date :NA

(71)**Name of Applicant :**
1)SUMITOMO SEIKA CHEMICALS CO., LTD.
Address of Applicant :346-1, Miyanishi, Harima-cho, Kako-gun, Hyogo 6750145 JAPAN.
(72)**Name of Inventor :**
1)MAEDA Nobuhiro
2)HARA Naoaki
3)TAKATORI Junichi

(57) Abstract :
The polymerization reactor is provided with a main container (1) and a jacket (2), which is provided so as to cover the outer surface of the main container (1) and which, together with the outer surface of the main container (1), forms a passage for a heat transfer medium to flow. The main container (1) is configured using a clad metal plate, which has: a metal support layer with an internal surface located on the inside of the main container and an external surface located on the outside of the main container; and an inner surface layer, which is bonded to the internal surface of the metal support layer and is obtained from a corrosion resistant metal that is thinner than the metal support layer.

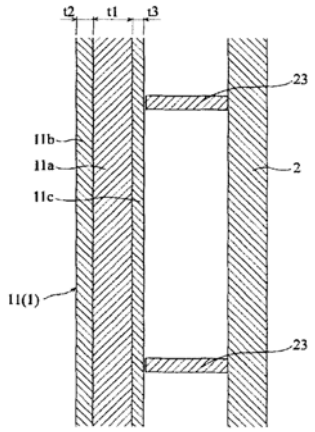

No. of Pages : 32 No. of Claims : 12

(12) PATENT APPLICATION PUBLICATION
(19) INDIA
(22) Date of filing of Application :12/09/2014
(21) Application No.1945/KOLNP/2014 A
(43) Publication Date : 19/12/2014

(54) Title of the invention : CONJUGATED POLYMERS

(51) International classification :C08G61/12,C08L65/00,H01B1/12
(31) Priority Document No :61/599,019
(32) Priority Date :15/02/2012
(33) Name of priority country :U.S.A.
(86) International Application No :PCT/EP2013/000357
Filing Date :06/02/2013
(87) International Publication No :WO 2013/120591
(61) Patent of Addition to Application Number :NA
Filing Date :NA
(62) Divisional to Application Number :NA
Filing Date :NA

(71)**Name of Applicant :**
1)MERCK PATENT GMBH
Address of Applicant :Frankfurter Strasse 250, 64293 Darmstadt, GERMANY.
(72)**Name of Inventor :**
1)BYRNE, Paul
2)KARSTEN, Bram
3)WALLER, David P.

(57) Abstract :
The invention relates to novel conjugated polymers containing repeating units derived from carbonylsubstituted benzodithiophene and repeating units derived from halogenated benzotriazole, to methods for their preparation and educts or intermediates used therein, to polymer blends, mixtures and formulations containing them, to the use of the polymers, polymer blends, mixtures and formulations as organic semiconductors in organic electronic (OE) devices, especially in organic photovoltaic (OPV) devices and organic photodetectors (OPD), and to OE, OPV and OPD devices comprising these polymers, polymer blends, mixtures or formulations.

No. of Pages : 73 No. of Claims : 25

(12) PATENT APPLICATION PUBLICATION
(19) INDIA
(22) Date of filing of Application :12/09/2014
(21) Application No.1946/KOLNP/2014 A
(43) Publication Date : 19/12/2014

(54) Title of the invention : PROCESSOR WITH A SCREENING SHEET AND USE OF SAID TYPE OF SCREENING SHEET

(51) International classification :D21B1/22
(31) Priority Document No :10 2012 004 839.4
(32) Priority Date :13/03/2012
(33) Name of priority country :Germany
(86) International Application No :PCT/DE2013/000129
Filing Date :11/03/2013
(87) International Publication No :WO 2013/135224
(61) Patent of Addition to Application Number :NA
Filing Date :NA
(62) Divisional to Application Number :NA
Filing Date :NA

(71)**Name of Applicant :**
1)Hans-Joachim BOLTERSDORF
Address of Applicant :Brohltalstrasse 10, 56656 Brohl-Lützing, GERMANY.
(72)**Name of Inventor :**
1)Hans-Joachim BOLTERSDORF

(57) Abstract :
Processor with a closed vessel that can be pressurized and has an upper area with a smaller diameter and a lower area with a larger diameter, wherein the upper area has a small spiral and the lower area has a large spiral, wherein one admission point for materials and one for water are arranged in the upper area, and a heavy-parts trap is arranged in the lower area.

No. of Pages : 28 No. of Claims : 17

(12) PATENT APPLICATION PUBLICATION
(19) INDIA
(22) Date of filing of Application :12/09/2014

(21) Application No.1947/KOLNP/2014 A
(43) Publication Date : 19/12/2014

(54) Title of the invention : AUXILIARY POWER UNIT ASSEMBLY AND METHOD OF USE

(51) International classification :B61C3/00,B60L11/02,H02P9/04
(31) Priority Document No :61/611,530
(32) Priority Date :15/03/2012
(33) Name of priority country :U.S.A.
(86) International Application No :PCT/US2013/032152
Filing Date :15/03/2013
(87) International Publication No :WO 2013/138734
(61) Patent of Addition to Application Number :NA
Filing Date :NA
(62) Divisional to Application Number :NA
Filing Date :NA

(71)**Name of Applicant :**
1)BRIGHT ENERGY STORAGE TECHNOLOGIES, LLP
Address of Applicant :5525 W. 56th Ave. Suite 200, Arvada, CO 80002 U.S.A
(72)**Name of Inventor :**
1)FRAZIER, Scott Raymond
2)PYKKONEN, Kevin
3)GINTER, Karl
4)PRITCHARD, Jeffrey Orion

(57) Abstract :
A locomotive assembly including an auxiliary power unit and a method of providing auxiliary power to a locomotive are disclosed. The locomotive assembly includes a locomotive having a power bus, a primary power source electrically coupled to the power bus, and a locomotive controller programmed to control the primary power source and transmit a first command signal to a power unit that is electrically coupled to the power bus. The power unit includes an auxiliary engine-generator set, a power interface electrically coupling the auxiliary engine-generate set to the power bus, and an auxiliary controller electrically coupled to the locomotive controller. The auxiliary controller is programmed to receive the command signal from the locomotive controller indicating a desired amount of power, control the auxiliary engine-generator set to produce at least the desired amount of power, and control the power interface to deliver the desired amount of power to the power bus.

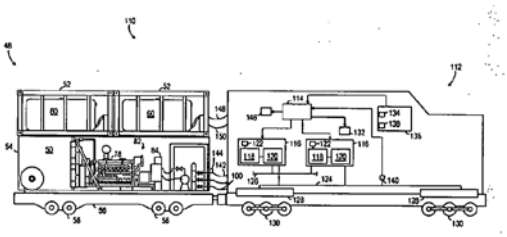

No. of Pages : 96 No. of Claims : 68

(12) PATENT APPLICATION PUBLICATION
(19) INDIA
(22) Date of filing of Application :15/09/2014

(21) Application No.1948/KOLNP/2014 A
(43) Publication Date : 19/12/2014

(54) Title of the invention : THREE-DIMENSIONAL OBJECT DETECTION DEVICE

(51) International classification :G08G1/16,G06T1/00
(31) Priority Document No :2012-046670
(32) Priority Date :02/03/2012
(33) Name of priority country :Japan
(86) International Application No :PCT/JP2013/054865
Filing Date :26/02/2013
(87) International Publication No :WO 2013/129361
(61) Patent of Addition to Application Number :NA
Filing Date :NA
(62) Divisional to Application Number :NA
Filing Date :NA

(71)**Name of Applicant :**
1)NISSAN MOTOR CO., LTD.
Address of Applicant :2, Takara-cho, Kanagawa-ku Yokohama-shi, Kanagawa 221-0023, JAPAN
(72)**Name of Inventor :**
1)Yasuhisa HAYAKAWA
2)Osamu FUKATA

(57) Abstract :
The present invention is provided with: a three-dimensional object detection means (32, 33, 34) that generates difference waveform information by counting the number of pixels indicating a difference equal to or greater than a difference threshold value in a difference image in which overhead view images taken at different times are aligned, and detects a three-dimensional object on the basis of the difference waveform information; a reference image area setting means (35) that sets, as a reference image area, an area which is different from a detection area and from which the extraction of contour information of an object is predicted; a contour information detection means (35) that extracts the contour information of the object; a reference sharpness calculation means (35) that calculates the reference sharpness on the basis of the contour information detected in the reference image area; and a detection-target sharpness calculation means (35) that calculates the detection-target sharpness on the basis of the contour information detected in the detection area. The three-dimensional object detection means (32, 33, 34) calculates the final sharpness on the basis of the reference sharpness and the detection-target sharpness, and sets the difference threshold value on the basis of the calculated final sharpness.

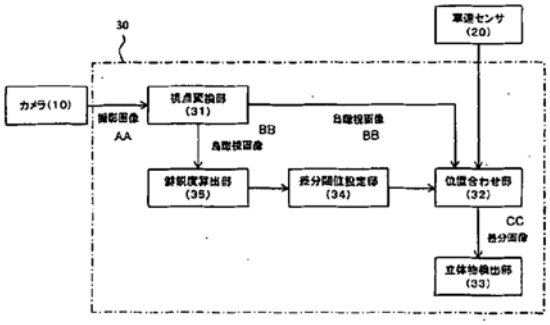

No. of Pages : 81 No. of Claims : 12

(12) PATENT APPLICATION PUBLICATION
(19) INDIA
(22) Date of filing of Application :01/09/2014
(21) Application No.1870/KOLNP/2014 A
(43) Publication Date : 19/12/2014

(54) Title of the invention : HOISTING CRANE

(51) International classification :B66C1/06
(31) Priority Document No :1026458
(32) Priority Date :18/06/2004
(33) Name of priority country :Netherlands
(86) International Application No :NA
Filing Date :NA
(87) International Publication No : NA
(61) Patent of Addition to Application Number :NA
Filing Date :NA
(62) Divisional to Application Number :
Filed on :01/01/1900

(71)**Name of Applicant :**
1)ITREC B.V.
Address of Applicant :2, ADMIRAAL THROMPSTRAAT NL-3115 HH SCHIEDAM NETHERLANDS
(72)**Name of Inventor :**
1)ROODENBURG, JOOP
2)WIJNING, DIEDERICK, BERNARDUS

(57) Abstract :
There is disclosed a hoisting crane (20), comprising a substantially hollow vertical column (21) with a foot (22) which is or can be fixed to a support, and with a top (23), a jib (24), an annular bearing structure (25), which extends around the vertical column (21) and guides and carries a jib connection member (26), so that the jib connection member can rotate about the column (21), the jib connection member forming a substantially horizontal pivot axis so that the jib can be pivoted up and down, topping means (30, 31) for pivoting the jib (24) up and down, the hoisting crane also comprising a winch (35); an associated hoisting cable (36) for hoisting a load; a top cable guide (40) at the top (23) of the vertical column; a hoisting cable guide (43) on the jib of the hoisting crane; the winch (35) being disposed in the column, preferably in the vicinity of the foot of the vertical column (21), so that the hoisting cable extends from the winch through the hollow vertical column to the top cable guide and then to the hoisting cable guide on the jib, the top cable guide (40) comprising a rotary bearing structure so that the top cable guide can follow rotary movements of the jib about the vertical column and adopts substantially the same angular position as the jib, characterised in that the winch (31, 35) is arranged on a movable winch support (50), which is mounted movable with respect to the vertical column (21,22), the winch support having an associated drive motor assembly (52) for moving the winch support (50), in such a manner that the winch support maintains a substantially constant orientation with respect to the jib (24) in the event of rotary movements of the jib about the vertical column (21,22).

No. of Pages : 33 No. of Claims : 13

(12) PATENT APPLICATION PUBLICATION
(19) INDIA
(22) Date of filing of Application :01/09/2014
(21) Application No.1871/KOLNP/2014 A
(43) Publication Date : 19/12/2014

(54) Title of the invention : METHOD FOR MANUFACTURING COLORING CERAMICS VIA COLLOIDAL DISPERSION FOLLOWED BY CONVENTIONAL PRESSING TECHNIQUES

(51) International classification :C04B35/48,C04B35/622
(31) Priority Document No :13/410,251
(32) Priority Date :01/03/2012
(33) Name of priority country :U.S.A.
(86) International Application No :PCT/US2013/027961
Filing Date :27/02/2013
(87) International Publication No :WO 2013/130560
(61) Patent of Addition to Application Number :NA
Filing Date :NA
(62) Divisional to Application Number :NA
Filing Date :NA

(71)**Name of Applicant :**
1)JAMES R. GLIDEWELL DENTAL CERAMICS, INC.
Address of Applicant :4141 Macarthur Boulevard, Newport Beach, CA 92660 UNITED STATES OF AMERICA.
(72)**Name of Inventor :**
1)CARDEN, Robin, A.

(57) Abstract :
A colored ceramic powder is compacted into a green state body via isostatic or biaxial pressing. The colored ceramic powder is produced from a mixture of a coloring solution consisting of metallic salts that is introduced to a ceramic slurry and subsequently dried. A coloring solution may comprise for example a metallic salt, a solvent, an organic solvent such as derivatives of propylene oxides, and an acid. Such a coloring solution can be used as a coloring agent for a ceramic body. The solution is thoroughly mixed with the ceramic slurry. Following the addition of the coloring agent, a binder can be added to the color slip. The amount of binder added can be anywhere from 0.5% to 10% by weight. Such a binder can be organic based, alcohol based, or acrylic based. Once all the constituents are thoroughly mixed to a homogeneous state, the slip is dried. The drying process can range from a conventional means to a more sophisticated methods which use spray drying equipment.. The slip can be subjected to a heating process over a range of temperatures such that all residual moisture is removed, leaving only a dried press-able powder. The dried powder can then be subjected to an isostatic or biaxial press manufacturing process to create a green state ceramic body. Once pressed, the ceramic body can be subjected to a sintering process. After final sinter, the resulting ceramic body possesses an innate color that is homogenous throughout its composition. The method is especially useful for coloring zirconia dental restorations.

No. of Pages : 16 No. of Claims : 25

(12) PATENT APPLICATION PUBLICATION
(19) INDIA
(22) Date of filing of Application :15/09/2014
(21) Application No.1957/KOLNP/2014 A
(43) Publication Date : 19/12/2014

(54) Title of the invention : STACK OF LAMINATIONS AND METHOD FOR THE PRODUCTION THEREOF

(51) International classification :H02K15/02
(31) Priority Document No :102012005795.4
(32) Priority Date :14/03/2012
(33) Name of priority country :Germany
(86) International Application No :PCT/EP2013/000742
Filing Date :13/03/2013
(87) International Publication No :WO 2013/135378
(61) Patent of Addition to Application Number :NA
Filing Date :NA
(62) Divisional to Application Number :NA
Filing Date :NA

(71)**Name of Applicant :**
1)KIENLE + SPIESS GMBH
Address of Applicant :Bahnhofstrasse 23, 74343 Sachsenheim GERMANY
(72)**Name of Inventor :**
1)BLOCHER, Daniel
2)BAUER, Steffen
3)BARDOS, Andras

(57) Abstract :
The stack of laminations consists of punched laminations (5), which are bonded together by an adhesive agent. The adhesive agent is composed of an adhesive (4) and an initiator (15), which consists of methacrylates, derivative imines and methacrylic esters. The completely cured adhesive bond has long-term resistance when exposed to a temperature of at least over 80°C. The adhesive (4) is applied over the full surface area and in a contacting manner to one side of the lamination (5) and the initiator (15) is applied to the same side and/or to the other side of the lamination (5). The initiator (15) reacts with the adhesive (4) when contact is made and establishes the adhesive connection between laminations (5) lying against one another. The adhesive agent may, however, also be an adhesive (4) that cures by itself when heat is applied.

No. of Pages : 35 No. of Claims : 42

(12) PATENT APPLICATION PUBLICATION
(19) INDIA
(22) Date of filing of Application :28/05/2012

(21) Application No.1289/KOLNP/2012 A
(43) Publication Date : 19/12/2014

(54) Title of the invention : ALARM REPORT METHOD, SYSTEM AND DEVICE FOR CASCADED EQUIPMENT

(51) International classification :H04L12/24
(31) Priority Document No :200910209154.0
(32) Priority Date :28/10/2009
(33) Name of priority country :China
(86) International Application No :PCT/CN2010/075258
Filing Date :19/07/2010
(87) International Publication No :WO 2011/050631
(61) Patent of Addition to Application Number :NA
Filing Date :NA
(62) Divisional to Application Number :NA
Filing Date :NA

(71)**Name of Applicant :**
1)ZTE CORPORATION
Address of Applicant :ZTE PLAZA, KEJI ROAD SOUTH, HI-TECH INDUSTRIAL PARK, NANSHAN, SHENZHEN, GUANGDONG 518057, CHINA
(72)**Name of Inventor :**
1)ZHANG, PANKE

(57) Abstract :
The disclosure discloses an alarm report method for cascaded equipments, comprises: after receiving link alarm information, a radio equipment determines the source of the link alarm information; the radio equipment selects one link alarm information report mode from multiple predetermined link alarm information report modes according to the result of determining the source; the radio equipment reports the link alarm information to a Radio Equipment Controller (REC) according to the selected link alarm information report mode. The disclosure further discloses an alarm report system and device for cascaded equipments. The disclosure can effectively lower the alarm information processing complexity of an REC and the correlation of alarms.

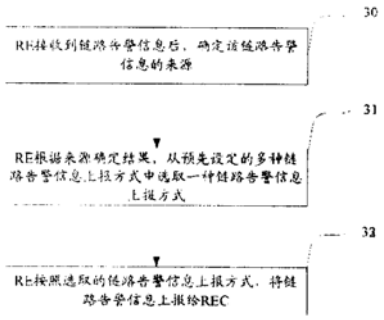

No. of Pages : 25 No. of Claims : 14

(12) PATENT APPLICATION PUBLICATION
(19) INDIA
(22) Date of filing of Application :05/09/2014

(21) Application No.1905/KOLNP/2014 A
(43) Publication Date : 19/12/2014

(54) Title of the invention : METHODS AND SYSTEMS FOR SIGNAL AMPLIFICATION OF BIOASSAYS

(51) International classification :C12Q1/70
(31) Priority Document No :61/601,244
(32) Priority Date :21/02/2012
(33) Name of priority country :U.S.A.
(86) International Application No :PCT/US2013/027060
Filing Date :21/02/2013
(87) International Publication No :WO 2013/126522
(61) Patent of Addition to Application Number :NA
Filing Date :NA
(62) Divisional to Application Number :NA
Filing Date :NA

(71)**Name of Applicant :**
1)LABORATORY CORPORATION OF AMERICA HOLDINGS
Address of Applicant :358 South Main Street, Burlington, North Carolina 27215 UNITED STATES OF AMERICA
(72)**Name of Inventor :**
1)ANDERSON, Dwight Lyman
2)CONRAD, Andrew J.
3)ERICKSON, Stephen Eric
4)HOPKINS, Ben Barrett

(57) Abstract :
Disclosed herein are methods and systems for the detection of an analyte of interest by an amplified assay. The method and systems of the invention utilize the high specificity of biomolecules that have been coupled to a solid support to further amplify a signal produced by the interaction of a binding agent with the analyte of interest as a means to detect low levels of the analyte of interest present in a sample. In certain embodiments, for immunochemical (for example, ELISA or RIA) or immunofluorescence assays in which a protein to be identified is bound directly or through capture antibodies to a passivated surface, amplification of 10,000-fold can be achieved.

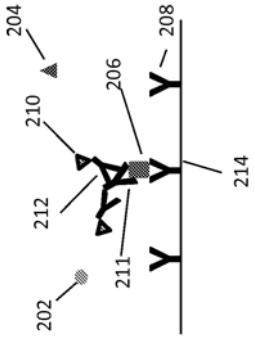

No. of Pages : 25 No. of Claims : 30

(12) PATENT APPLICATION PUBLICATION
(19) INDIA
(22) Date of filing of Application :05/09/2014

(21) Application No.1906/KOLNP/2014 A
(43) Publication Date : 19/12/2014

(54) Title of the invention : DLL3 MODULATORS AND METHODS OF USE

(51) International classification :C07K16/28,A61K47/48,C07K16/30
(31) Priority Document No :61/603,173
(32) Priority Date :24/02/2012
(33) Name of priority country :U.S.A.
(86) International Application No :PCT/US2013/027391
Filing Date :22/02/2013
(87) International Publication No :WO 2013/126746
(61) Patent of Addition to Application Number :NA
Filing Date :NA
(62) Divisional to Application Number :NA
Filing Date :NA

(71)**Name of Applicant :**
1)STEM CENTRX, INC.
Address of Applicant :450 East Jamie Court, South San Francisco, CA 94080 U.S.A.
(72)**Name of Inventor :**
1)STULL, Robert, A.
2)SAUNDERS, Laura
3)DYLLA, Scott, J.
4)FOORD, Orit
5)LIU, David
6)TORGOV, Michael
7)SHAO, Hui

(57) Abstract :
Modulators of DLL3, including antibodies and derivatives thereof, and methods of using such modulators to treat proliferative disorders are provided.

Clone	Bin	Domain	Affinity (nM)	% Live Cells (*in vitro*)	Cyno XR	Mouse & Rat XR
SC16.4	F	EGF4	0.5[F]	49	N.D.	Yes
SC16.8	A	EGF5	0.5[F]	82	N.D.	Yes
SC16.10	E	EGF2	4.0[F]	18	N.D.	No
SC16.13	B	EGF2	2.0[B]	31	No[Y]	No
SC16.15	G	N-terminal	0.5[B]	24	Yes[B]	Yes
SC16.25	C	N-terminal	0.2[B]	28	Yes[B]	No
SC16.34	D	DSL	0.7[B]	12	Yes[B]	Yes
SC16.39	I	EGF6	1.0[F]	98	N.D.	Yes
SC16.46	A	EGF1	0.5[F]	19	No[Y]	Yes
SC16.51	H	N-terminal	2.0[F]	56	Yes[B]	Yes
SC16.56	D	DSL	1.0[B]	16	Yes[B]	Yes
SC16.65	B	EGF2	0.9[B]	13	No[B]	No
SC16.67	D	EGF3	0.5[F]	37	Yes[Y]	No

[B] Biacore; [F] ForteBio; [Y] Yeast Display

No. of Pages : 230 No. of Claims : 20

(12) PATENT APPLICATION PUBLICATION
(19) INDIA
(22) Date of filing of Application :16/09/2014

(21) Application No.1990/KOLNP/2014 A
(43) Publication Date : 19/12/2014

(54) Title of the invention : NEW ALPHA2 ADRENOCEPTOR AGONISTS

(51) International classification	:C07D405/04,C07D409/04,A61K31/4178
(31) Priority Document No	:61/619,109
(32) Priority Date	:02/04/2012
(33) Name of priority country	:U.S.A.
(86) International Application No Filing Date	:PCT/FI2013/000013 :28/03/2013
(87) International Publication No	:WO 2013/150173
(61) Patent of Addition to Application Number Filing Date	:NA :NA
(62) Divisional to Application Number Filing Date	:NA :NA

(71)**Name of Applicant :**
1)ORION CORPORATION
Address of Applicant :Orionintie 1, FI-02200 Espoo FINLAND
(72)**Name of Inventor :**
1)KOSKELAINEN, Tuula
2)LINNANEN, Tero
3)MINKKILÄ, Anna
4)MÄKELÄ, Mikko
5)POHJAKALLIO, Antti

(57) Abstract :
Compounds of formula (I), wherein X and R 1-R , are as defined in the claims, exhibit alpha2 agonistic activity and thus useful as alpha2 agonists, especially as alpha2A agonists. Methods of use of said compounds are also provided.

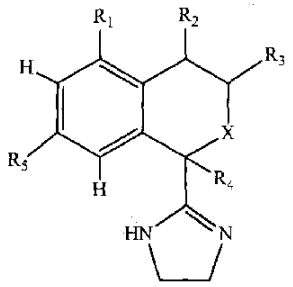

No. of Pages : 80 No. of Claims : 16

(12) PATENT APPLICATION PUBLICATION
(19) INDIA
(22) Date of filing of Application :16/09/2014
(21) Application No.1991/KOLNP/2014 A
(43) Publication Date : 19/12/2014

(54) Title of the invention : CIRCUMFERENTIALLY CONSTRAINING SUTURES FOR A STENT-GRAFT

(51) International classification :A61F2/07,A61F2/954,A61B17/068
(31) Priority Document No :13/458,076
(32) Priority Date :27/04/2012
(33) Name of priority country :U.S.A.
(86) International Application No :PCT/US2013/026713
Filing Date :19/02/2013
(87) International Publication No :WO 2013/162684
(61) Patent of Addition to Application Number :NA
Filing Date :NA
(62) Divisional to Application Number :NA
Filing Date :NA

(71)**Name of Applicant :**
1)MEDTRONIC VASCULAR INC.
Address of Applicant :c/o IP Legal Department, Medtronic Vascular Inc., 3576 Unocal Place, Santa Rosa, California 95403 UNITED STATES OF AMERICA
(72)**Name of Inventor :**
1)PEARSON, Meghan
2)SIMMONS, Emilie
3)PEARCE, Stephen
4)RUNDLE, Stephanie
5)ZAVALA, Ana

(57) Abstract :
A circumferentially constraining suture (130) for an endovascular prosthesis (100) having a tubular body (102) and a plurality of stents (104) coupled to the tubular body includes a first thread (132) coupled at a first end to one of the stents and a first thread loop (136) disposed opposite the first end. The first thread extends only partially around a circumference of the tubular body in a radially expanded configuration. A second thread (134) having a second thread loop (138) is interlocked with the first thread loop and extends from the first thread loop around a remainder of the circumference of the tubular body. Pulling the second thread causes the first thread to circumferentially constrain the tubular body to a reduced diameter configuration. A trigger wire (150) inserted through the first thread loop retains the first thread such that the tubular body is in the reduced diameter configuration after removal of the second thread.

No. of Pages : 34 No. of Claims : 20

(12) PATENT APPLICATION PUBLICATION
(19) INDIA
(22) Date of filing of Application :17/09/2014
(21) Application No.1992/KOLNP/2014 A
(43) Publication Date : 19/12/2014

(54) Title of the invention : METHOD FOR ADJUSTING PRECURSOR POWDER FOR SINTERED ORE, AND PRECURSOR POWDER FOR SINTERED ORE

(51) International classification :C22B1/16
(31) Priority Document No :2012-066244
(32) Priority Date :22/03/2012
(33) Name of priority country :Japan
(86) International Application No :PCT/JP2013/001933
Filing Date :21/03/2013
(87) International Publication No :WO 2013/140809
(61) Patent of Addition to Application Number :NA
Filing Date :NA
(62) Divisional to Application Number :NA
Filing Date :NA

(71)**Name of Applicant :**
1)JFE STEEL CORPORATION,
Address of Applicant :2-3, Uchisaiwai-cho 2-chome, Chiyoda-ku, Tokyo 100-0011 JAPAN
(72)**Name of Inventor :**
1)OYA, Kenji
2)HIGUCHT,Takahide

(57) Abstract :
According to the present invention, by adjusting a mixing ratio [(C/F) x 100] between the mass of an iron ore raw material (F) having particles with a diameter of at least 3 mm, and the mass of coke breeze (C) having particles with a diameter of at least 3 mm, to a range of two to three percent, a precursor powder for sintering which is excellent for efficiently producing sinter can be adjusted, without depending on the quality of the iron ore.

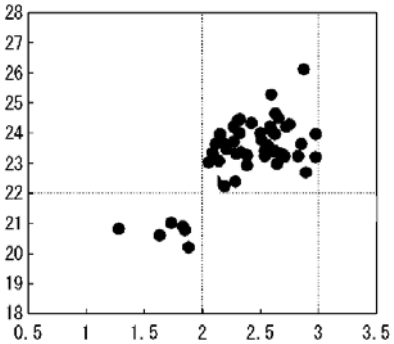

No. of Pages : 15 No. of Claims : 4

(12) PATENT APPLICATION PUBLICATION
(19) INDIA
(22) Date of filing of Application :05/09/2014

(21) Application No.1910/KOLNP/2014 A
(43) Publication Date : 19/12/2014

(54) Title of the invention : A NOVEL BRAZING CONCEPT

(51) International classification :B23K35/00,B23K35/02
(31) Priority Document No :12161742.7
(32) Priority Date :28/03/2012
(33) Name of priority country :EPO
(86) International Application No :PCT/EP2013/056554
Filing Date :27/03/2013
(87) International Publication No :WO 2013/144222
(61) Patent of Addition to Application Number :NA
Filing Date :NA
(62) Divisional to Application Number :NA
Filing Date :NA

(71)**Name of Applicant :**
1)ALFA LAVAL CORPORATE AB
Address of Applicant :Box 73, S-22100 Lund, SWEDEN
(72)**Name of Inventor :**
1)SJÖDIN, Per
2)WALTER, Kristian

(57) Abstract :
The present invention relates to a blend of at least one boron source and at least one silicon source, wherein the blend comprises boron and silicon in a weight ratio boron to silicon within a range from about 5:100 to about 2:1, wherein silicon and boron are present in the blend in at least 25 wt%, and wherein the at least one boron source and the at least one silicon source are oxygen free except for inevitable amounts of contaminating oxygen, and wherein the blend is a mechanical blend of powders, and wherein particles in the powders have an average particle size less than 250 µm. The present invention relates further to a composition comprising the blend a substrate applied with the blend, a method for providing a brazed product, and uses.

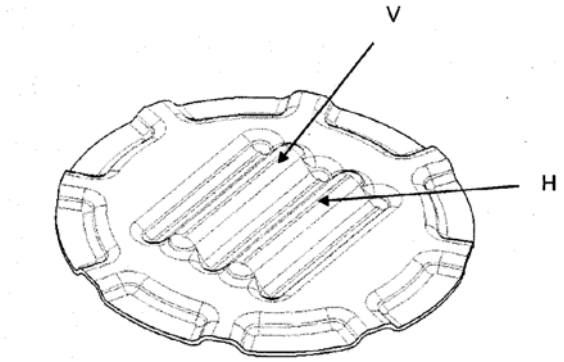

No. of Pages : 67 No. of Claims : 41

(12) PATENT APPLICATION PUBLICATION
(19) INDIA
(22) Date of filing of Application :17/09/2014

(21) Application No.1995/KOLNP/2014 A
(43) Publication Date : 19/12/2014

(54) Title of the invention : RADIO COMMUNICATION SYSTEM, RADIO BASE STATION, RADIO TERMINAL, AND RADIO COMMUNICATION METHOD

(51) International classification :H04W72/04,H04W16/32,H04W28/16
(31) Priority Document No :NA
(32) Priority Date :NA
(33) Name of priority country :NA
(86) International Application No :PCT/JP2012/001907
Filing Date :19/03/2012
(87) International Publication No :WO 2013/140436
(61) Patent of Addition to Application Number :NA
Filing Date :NA
(62) Divisional to Application Number :NA
Filing Date :NA

(71)**Name of Applicant :**
1)FUJITSU LIMITED
Address of Applicant :1-1, Kamikodanaka 4-chome, Nakahara-ku, Kawasaki-shi, Kanagawa 211-8588, JAPAN
(72)**Name of Inventor :**
1)SIIZAKI, Kotaro
2)ITO, Akira

(57) Abstract :
The objective of the disclosed technique is to arrange that, when a radio terminal communicates with different radio base stations between UL and DL, another radio base station, which is different from the connected radio base station, be able to receive data from the radio terminal. A radio communication system disclosed herein comprises radio base stations and radio terminals that perform radio communications with the respective radio base stations. Each of the radio base stations comprises: a reception unit that receives first information related to first uplink resources that are not used by the other radio terminals performing the radio communications with the other radio base stations; and a downlink radio transmission unit that transmits, on the basis of the first information, second information indicating a second uplink resource, which is selected from the first uplink resources for transmission to the other radio base stations, to the radio terminal.

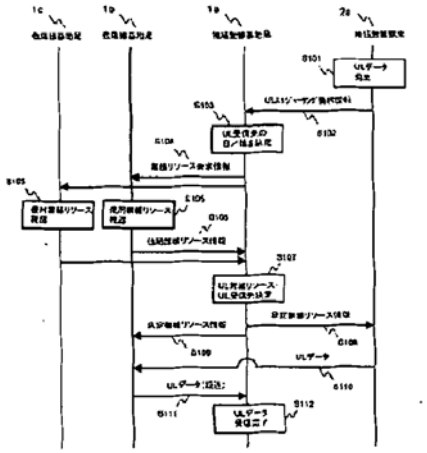

No. of Pages : 84 No. of Claims : 20

(12) PATENT APPLICATION PUBLICATION
(19) INDIA
(22) Date of filing of Application :17/09/2014
(21) Application No.1996/KOLNP/2014 A
(43) Publication Date : 19/12/2014

(54) Title of the invention : IMPROVED CONTROLLABILITY OXIDATIVE DEHYDROGENATION PROCESS FOR PRODUCING BUTADIENE

(51) International classification :C07C5/333,C07C11/16,B01J23/745
(31) Priority Document No :61/617,535
(32) Priority Date :29/03/2012
(33) Name of priority country :U.S.A.
(86) International Application No :PCT/US2013/034215
Filing Date :28/03/2013
(87) International Publication No :WO 2013/148913
(61) Patent of Addition to Application Number :NA
Filing Date :NA
(62) Divisional to Application Number :NA
Filing Date :NA

(71)**Name of Applicant :**
1)TPC GROUP LLC
Address of Applicant :One Allen Center, Suite 1000, 500 Dallas Street, Houston, TEXAS 77002, UNITED STATES OF AMERICA
(72)**Name of Inventor :**
1)CACIULA, Liana
2)DUFF, Joseph, G.
3)CHADA, Sirisha
4)BALLARD, Elizabeth
5)MCFARLAND, Cecil G.

(57) Abstract :
Butadiene is made from a butene rich feed, passing a superheated butene rich feed including superheated steam and oxygen at a temperature of at least about 343°C (650° F) over a catalyst bed having a depth of over about 69 cm (27 inches) of granules of ferritic oxidative dehydrogenation catalyst. Inlet conditions being controlled such that the oxidative dehydrogenation reactions initially occur in the lower most layers of catalyst. Process control includes monitoring the temperature throughout the bed and increasing the inlet temperature in response to a drop in the temperature in the active layer, when the active layer of oxidative dehydrogenation catalyst begins to become deactivated so that the reaction zone moves upwardly in the oxidative dehydrogenation bed.

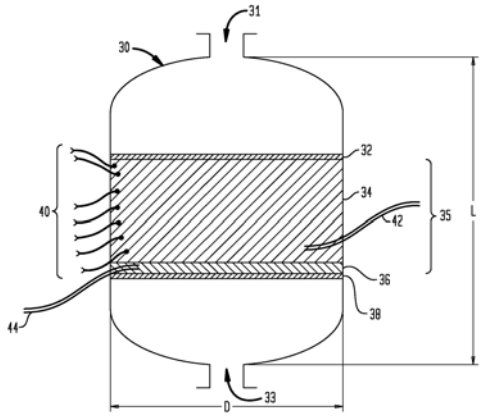

No. of Pages : 52 No. of Claims : 48

(12) PATENT APPLICATION PUBLICATION
(19) INDIA
(22) Date of filing of Application :17/09/2014
(21) Application No.1997/KOLNP/2014 A
(43) Publication Date : 19/12/2014

(54) Title of the invention : METHOD FOR PRODUCING HYDROGEN OR DEUTERIUM, METHOD FOR PRODUCING HYDROGENATED OR DEUTERATED ORGANIC COMPOUND, METHOD FOR HYDROGENATING OR DEUTERATING ORGANIC COMPOUND, METHOD FOR DEHALOGENATING ORGANIC COMPOUND HAVING HALOGEN, AND BALL FOR USE IN MECHANOCHEMICAL REACTION

(51) International classification	:C01B3/08,B01J21/10,B01J23/06
(31) Priority Document No	:2012-032585
(32) Priority Date	:17/02/2012
(33) Name of priority country	:Japan
(86) International Application No	:PCT/JP2013/053016
Filing Date	:08/02/2013
(87) International Publication No	:WO 2013/121997
(61) Patent of Addition to Application Number	:NA
Filing Date	:NA
(62) Divisional to Application Number	:NA
Filing Date	:NA

(71)**Name of Applicant :**
1)SHIONO CHEMICAL CO., LTD.
Address of Applicant :2-10-8, Yaesu, Chuo-ku, Tokyo 1040028 JAPAN
(72)**Name of Inventor :**
1)SAJIKI Hironao
2)MONGUCHI Yasunari
3)SAWAMA Yoshinari
4)KONDO Shinichi
5)SASAI Yasushi

(57) Abstract :
The purpose of the present invention is to provide: a method for obtaining hydrogen or deuterium with high efficiency or hydrogenating or deuterating an organic compound; a device for use in the method; and others. Provided are: a method for producing hydrogen or deuterium by subjecting water or heavy water to a mechanochemical reaction in the presence of a catalyst metal, said method being characterized in that such an energy density that the speed of acceleration generated by rotating is 75 G or more is applied to water or heavy water for 25 minutes or longer; a method for producing a hydrogenated or deuterated organic compound; a method for hydrogenating or deuterating an organic compound; a method for dehalogenating an organic compound having a halogen; and a ball for use in a mechanochemical reaction.

No. of Pages : 36 No. of Claims : 21

(12) PATENT APPLICATION PUBLICATION
(19) INDIA
(22) Date of filing of Application :28/08/2014

(21) Application No.1840/KOLNP/2014 A
(43) Publication Date : 19/12/2014

(54) Title of the invention : HYDRAULIC STRUCTURE FOR WATER FLOW CONTROL

(51) International classification :E02B3/02,E02B8/06,E02B8/08
(31) Priority Document No :368/12
(32) Priority Date :14/03/2012
(33) Name of priority country :Switzerland
(86) International Application No :PCT/CH2013/000042
Filing Date :14/03/2013
(87) International Publication No :WO 2013/134886
(61) Patent of Addition to Application Number :NA
Filing Date :NA
(62) Divisional to Application Number :NA
Filing Date :NA

(71)**Name of Applicant :**
1)JOKELA, Jouni
Address of Applicant :Aussenmatteweg 22 CH-3714 Frutigen SWITZERLAND.
(72)**Name of Inventor :**
1)JOKELA, Jouni

(57) Abstract :
A hydraulic structure comprises walls (1) creating a downstream narrowing passage in a streaming surface water. The downstream ends (4) of the walls (1) are edged in order to generate vortices (2) dissolving from the edges (4) downstream which dissipate the energy of the flow created by a level difference between the entry and the exit of the passage.

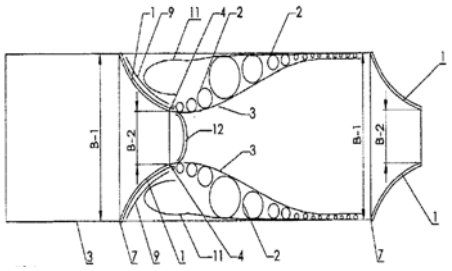

No. of Pages : 26 No. of Claims : 14

(12) PATENT APPLICATION PUBLICATION
(19) INDIA
(22) Date of filing of Application :10/09/2014

(21) Application No.1927/KOLNP/2014 A
(43) Publication Date : 19/12/2014

(54) Title of the invention : AQUEOUS PHARMACEUTICAL COMPOSITION CONTAINING A BIOLOGIC THERAPEUTIC AGENT AND GUANIDINE OR A GUANIDINE DERIVATIVE AND AN INJECTION INCLUDING THE COMPOSITION

(51) International classification	:A61K9/00,A61K47/18,A61K47/26
(31) Priority Document No	:61/651,588
(32) Priority Date	:25/05/2012
(33) Name of priority country	:U.S.A.
(86) International Application No	:PCT/EP2013/060649
Filing Date	:23/05/2013
(87) International Publication No	:WO 2013/174936
(61) Patent of Addition to Application Number	:NA
Filing Date	:NA
(62) Divisional to Application Number	:NA
Filing Date	:NA

(71)**Name of Applicant :**
1)NOVARTIS AG
Address of Applicant :Lichtstrasse 35, CH-4056 Basel SWITZERLAND.
(72)**Name of Inventor :**
1)SCHMITT, David
2)WALLNY, Hans-Joachim

(57) Abstract :
The present invention is directed to an aqueous pharmaceutical composition, particularly an aqueous ophthalmic composition, suitable as an injection, particularly an intravitreal injection. The composition includes a biologic therapeutic agent(e.g., an isolated monoclonal antibody that specifically binds to a C5 protein) that tends to raise the viscosity of the composition and a guanidine and/or guanidine derivative (e.g., L-arginine) that tends to lower the viscosity of the composition.

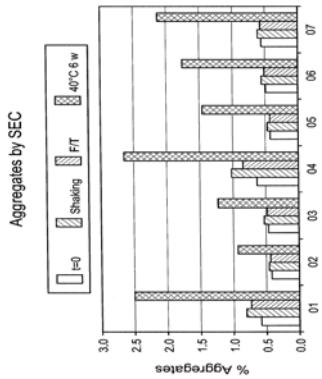

No. of Pages : 27 No. of Claims : 20

(12) PATENT APPLICATION PUBLICATION
(19) INDIA
(22) Date of filing of Application :18/09/2014
(21) Application No.2008/KOLNP/2014 A
(43) Publication Date : 19/12/2014

(54) Title of the invention : LUBRICATING OIL COMPOSITION

(51) International classification	:C10M169/04,C10M101/02,C10M117/02
(31) Priority Document No	:2012-055140
(32) Priority Date	:12/03/2012
(33) Name of priority country	:Japan
(86) International Application No Filing Date	:PCT/JP2013/056556 :11/03/2013
(87) International Publication No	:WO 2013/137160
(61) Patent of Addition to Application Number Filing Date	:NA :NA
(62) Divisional to Application Number Filing Date	:NA :NA

(71)**Name of Applicant :**
1)IDEMITSU KOSAN CO.,LTD.
Address of Applicant :1-1, Marunouchi 3-chome, Chiyoda-ku, Tokyo 1008321 JAPAN
(72)**Name of Inventor :**
1)KIKO Yumiko
2)OKADA Tahei

(57) Abstract :
This lubricating oil composition is prepared by blending a base oil which exhibits a kinematic viscosity of 10 to 1000mm2/s at 40°C with (A) 0.001 to 0.3 mass% (in terms of phosphorus content) of at least one phosphorus compound represented by formula (1), (B) 0.01 to 0.5 mass% (in terms of sulfur content) of at least one sulfur compound, and (D) 0.01 to 1 mass% of a succinimide derivative. The sulfur compound is selected from among: sulfur compounds represented by formula (2); and sulfur compounds which each have a dithio (-S-S-) linkage in the molecule and which each give a result equal or superior to class 2 in a copper strip corrosion test wherein a composition prepared by adding 1 mass% of each of the sulfur compounds to the base oil is examined. (For formulae (1) and (2), refer to the claims.)

No. of Pages : 27 No. of Claims : 10

(12) PATENT APPLICATION PUBLICATION
(19) INDIA
(22) Date of filing of Application :19/09/2014

(21) Application No.2009/KOLNP/2014 A
(43) Publication Date : 19/12/2014

(54) Title of the invention : TRANSITIONAL COUPLING ,VEHICLE GROUP HAVING AT LEAST TWO VEHICLES ,THE COUPLING DEVICES OF WHICH ARE COUPLED BY MEANS OF SUCH A TRANSITIONAL COUPLING ,AND METHOD FOR COUPLING THE COUPLING DEVICES OF TWO VEHICLES

(51) International classification :B61G5/04,B61G5/08
(31) Priority Document No :10 2012 205 282.8
(32) Priority Date :30/03/2012
(33) Name of priority country :Germany
(86) International Application No :PCT/EP2013/056513
Filing Date :27/03/2013
(87) International Publication No :WO 2013/144201
(61) Patent of Addition to Application Number :NA
Filing Date :NA
(62) Divisional to Application Number :NA
Filing Date :NA

(71)**Name of Applicant :**
1)SIEMENS AKTIENGESELLSCHAFT
Address of Applicant :Wittelsbacherplatz 2, 80333 München,Germany
(72)**Name of Inventor :**
1)MAISCHAK Dieter
2)OTTO Marcus
3)PFEIFER Christian

(57) Abstract :
The invention relates to a transitional coupling (15; 53; 83) for coupling the coupling devices (7, 12; 37, 42; 67, 72) of two vehicles (2, 3; 32, 33; 62, 63) having air conduits (5, 10; 35, 40; 65, 70), having a first connecting device (16; 52; 82) for detachably connecting the transitional coupling to a first (7; 37; 67) of the coupling devices, having a second connecting device (18; 54; 84) for detachably connecting the transitional coupling to a second (12; 42; 72) of the coupling devices, having a coupling carrier (20; 55; 85) for connecting the first connecting device (16; 52; 82) to the second connecting device (18; 54; 84), and having a coupling conduit (21; 56; 86) for connecting the air conduits (5, 10; 35, 40; 65, 70) of the two vehicles. In order to improve the interoperability of the transitional coupling (15; 53; 83) and of the vehicles (2, 3; 32 33; 62, 63) of a vehicle group (1; 31; 61), said vehicles being coupled by means of such a transitional coupling, an air preparation device (23; 23a; 23b) held by the coupling carrier (20; 55; 85) and having an air preparation unit (24.1) is provided, wherein the one air preparation unit (24.1) is arranged in the airflow path of the one coupling conduit (21; 56; 86).

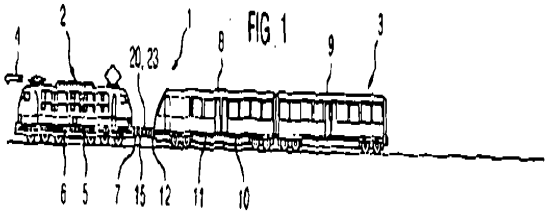

No. of Pages : 24 No. of Claims : 11

(12) PATENT APPLICATION PUBLICATION
(19) INDIA
(22) Date of filing of Application :11/09/2014

(21) Application No.1935/KOLNP/2014 A
(43) Publication Date : 19/12/2014

(54) Title of the invention : DRIVER ADVICE SYSTEM FOR A VEHICLE

(51) International classification :G05B19/042,B60W50/08
(31) Priority Document No :1202427.9
(32) Priority Date :13/02/2012
(33) Name of priority country :U.K.
(86) International Application No :PCT/EP2012/067458
Filing Date :06/09/2012
(87) International Publication No :WO 2013/120546
(61) Patent of Addition to Application Number :NA
Filing Date :NA
(62) Divisional to Application Number :NA
Filing Date :NA

(71)**Name of Applicant :**
1)JAGUAR LAND ROVER LIMITED
Address of Applicant :Abbey Road, Whitley,Coventry Warwickshire CV3 4LF, UNITED KINGDOM
(72)**Name of Inventor :**
1)KELLY, James
2)FAIRGRIEVE, Andrew
3)DENNEHY, Dan
4)HEMES, Elliot

(57) Abstract :
A driver advice system for a vehicle having at least one vehicle subsystem (12a-12e) comprises selection means (20) for receiving at least one driving condition indicator for the vehicle and for selecting, from a plurality of settings, a preferred setting for the at least one vehicle subsystem in response to the at least one driving condition indicator. The driver advice system includes an indication means for providing to the driver an indication of the preferred setting for one or more of the vehicle subsystems (12a-12e).

No. of Pages : 32 No. of Claims : 28

(12) PATENT APPLICATION PUBLICATION
(19) INDIA
(22) Date of filing of Application :11/09/2014

(21) Application No.1936/KOLNP/2014 A
(43) Publication Date : 19/12/2014

(54) Title of the invention : MOBILE VIDEO DELIVERY

(51) International classification :G06F15/16
(31) Priority Document No :NA
(32) Priority Date :NA
(33) Name of priority country :NA
(86) International Application No :PCT/US2012/024921
Filing Date :13/02/2012
(87) International Publication No :WO 2013/122569
(61) Patent of Addition to Application Number :NA
Filing Date :NA
(62) Divisional to Application Number :NA
Filing Date :NA

(71)**Name of Applicant :**
1)AFFIRMED NETWORKS, INC.
Address of Applicant :35 Nagog Park, 1 st Floor, Acton, MA 01720 UNITED STATES OF AMERICA.
(72)**Name of Inventor :**
1)VENKATRAMAN, Srinivasan
2)KRISHNAMURTHY, Anand
3)CHUNG, Jae
4)SHERER, Paul
5)GARG, Deepak

(57) Abstract :
Methods and apparatus, including computer program products, for mobile video delivery. A method includes, in a mobile network comprising at least a core element and one or more evolved Node Bs (eNBs), receiving a request to initiate a progressive download of a video object, splitting the requested video object into self- contained independent video segments, transrating each of the self-contained independent video segments for different rates, and delivering a segment from a rate bucket-that matches a current network condition determined by bandwidth estimation.

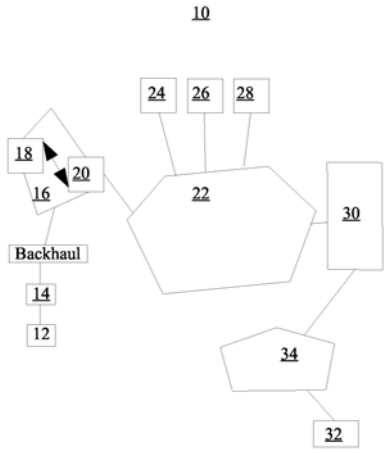

No. of Pages : 19 No. of Claims : 18

(12) PATENT APPLICATION PUBLICATION
(19) INDIA
(22) Date of filing of Application :19/09/2014
(21) Application No.2013/KOLNP/2014 A
(43) Publication Date : 19/12/2014

(54) Title of the invention : VEHICLE SUSPENSION ARM

(51) International classification :B60G7/00
(31) Priority Document No :NA
(32) Priority Date :NA
(33) Name of priority country :NA
(86) International Application No :PCT/JP2012/054146
Filing Date :21/02/2012
(87) International Publication No :WO 2013/124971
(61) Patent of Addition to Application Number :NA
Filing Date :NA
(62) Divisional to Application Number :NA
Filing Date :NA

(71)**Name of Applicant :**
1)YOROZU CORPORATION
Address of Applicant :3-7-60,Tarumachi,Kohoku-ku,Yokohama-shi,Kanagawa 2228560,Japan
(72)**Name of Inventor :**
1)NAKASATO Hidetoshi

(57) Abstract :
[Problem] To provide a curved vehicle suspension arm which exhibits high durability and which can be produced at a high productivity without relying on forging or casting. [Solution] A second plate (20) is sandwiched between a pair of first plates (10), and the plates (10, 20) are joined to one another by welding.

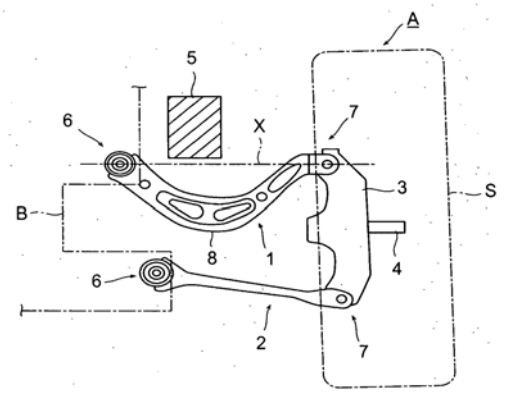

No. of Pages : 21 No. of Claims : 6

(12) PATENT APPLICATION PUBLICATION
(19) INDIA
(22) Date of filing of Application :19/09/2014

(21) Application No.2014/KOLNP/2014 A
(43) Publication Date : 19/12/2014

(54) Title of the invention : VEHICLE CONTROL DEVICE AND VEHICLE CONTROL METHOD

(51) International classification	:B60G17/0195,B60G17/015,B60W10/00
(31) Priority Document No	:2012-067073
(32) Priority Date	:23/03/2012
(33) Name of priority country	:Japan
(86) International Application No Filing Date	:PCT/JP2012/078462 :02/11/2012
(87) International Publication No	:WO 2013/140657
(61) Patent of Addition to Application Number Filing Date	:NA :NA
(62) Divisional to Application Number Filing Date	:NA :NA

(71)**Name of Applicant :**
1)NISSAN MOTOR CO.,LTD.
Address of Applicant :2,Takara-cho,Kanagawa-ku,Yokohama-shi,Kanagawa 221-0023,Japan
(72)**Name of Inventor :**
1)KIKUCHI Hironobu
2)HIRAYAMA Katsuhiko

(57) Abstract :
In the present invention a power source attitude control is performed to suppress changes in the sprung mass behavior of a vehicle, and damping force control for variable damping force shock absorbers is performed to suppress changes in the sprung mass behavior. At this time, when the stroke speed is low, the degree of saturation of the variable damping force shock absorbers is set smaller than when the stroke speed is high.

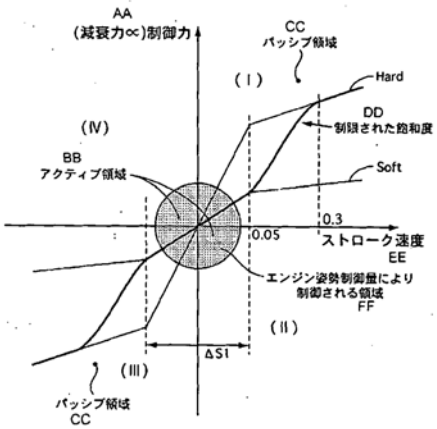

No. of Pages : 106 No. of Claims : 26

(12) PATENT APPLICATION PUBLICATION
(19) INDIA
(22) Date of filing of Application :19/09/2014
(21) Application No.2015/KOLNP/2014 A
(43) Publication Date : 19/12/2014

(54) Title of the invention : BRAKE MECHANISM FOR AN ELECTRONIC PIPETTE

(51) International classification :B01L3/02
(31) Priority Document No :20125372
(32) Priority Date :30/03/2012
(33) Name of priority country :Finland
(86) International Application No :PCT/FI2013/050359
Filing Date :02/04/2013
(87) International Publication No :WO 2013/144457
(61) Patent of Addition to Application Number :NA
Filing Date :NA
(62) Divisional to Application Number :NA
Filing Date :NA

(71)**Name of Applicant :**
1)SARTORIUS BIOHIT LIQUID HANDLING OY
Address of Applicant :Laippatie 1, FI-00880 Helsinki Finland
(72)**Name of Inventor :**
1)HINTIKKA,Ville

(57) Abstract :
For use in an electronic pipette, a brake mechanism which is used for abruptly stopping the movement of the actuator that moves the plunger , which mechanism comprises a rotatable, essentially circular rotor that is at its periphery provided with brake notches arranged at regular intervals, and a brake actuator comprising a motion inducing means, a brake member (1) to which a brake cam (1la), compatible with the brake notches is connected, a mediation mechanism for transmission of the movement of the motion inducing means to the brake member, the brake member comprising connected to the motion inducing means, a turnable member (2) that is arranged to act with the brake member such that the movement of the turnable member can be accelerated before it essentially effects the movement of the brake member.

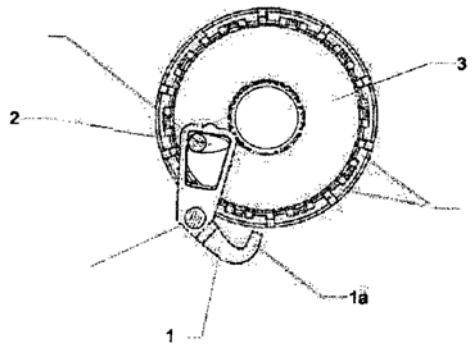

No. of Pages : 8 No. of Claims : 6

(12) PATENT APPLICATION PUBLICATION
(19) INDIA
(22) Date of filing of Application :19/09/2014
(21) Application No.2016/KOLNP/2014 A
(43) Publication Date : 19/12/2014

(54) Title of the invention : PRESS FORMING DEVICE, PRESS-FORMING METHOD USING SAME, AND ROTOR CORE OF ALTERNATING-CURRENT GENERATOR FOR AUTOMOBILE MANUFACTURED USING THIS PRESS-FORMING METHOD

(51) International classification :B21J5/06
(31) Priority Document No :2012-177571
(32) Priority Date :09/08/2012
(33) Name of priority country :Japan
(86) International Application No :PCT/JP2013/071685
Filing Date :09/08/2013
(87) International Publication No :WO 2014/025022
(61) Patent of Addition to Application Number :NA
Filing Date :NA
(62) Divisional to Application Number :NA
Filing Date :NA

(71)**Name of Applicant :**
1)SIGMA & HEARTS CO.LTD.
Address of Applicant :99 Moo 4,Bangna-Trad Km.23,Bangsaothong, Samutprakarn 10540,Thailand
(72)**Name of Inventor :**
1)NUKA Motoharu
2)NOGUCHI Takayo
3)MURAMATSU Tsuyoshi

(57) Abstract :
[Problem] To achieve a press-forming device with which, when a steel rod-shaped projection having a tapered shape is press-formed, burrs generated between the projection and a back surface tool can be reduced without requiring an advanced lubricating film, and the forming of a back- surface part can be performed more suitably, and the service life of the forming tool can be prolonged. [Solution] A device for press-forming a steel rod-shaped projection having a tapered tip, the device being characterized in that a preformed material to be processed (31a) is held in a back surface tool (32) and a freely rotating rotary roll (41) is rolled toward the tapered tip part of this material to be processed (31a) while being pressed against this material to be processed, thereby plastically deforming the material to be processed (31a) to form a tapered shape.

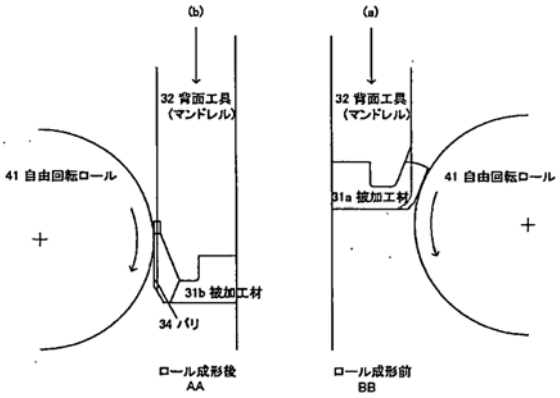

No. of Pages : 16 No. of Claims : 5

(12) PATENT APPLICATION PUBLICATION
(19) INDIA
(22) Date of filing of Application :12/09/2014

(21) Application No.1941/KOLNP/2014 A
(43) Publication Date : 19/12/2014

(54) Title of the invention : PLANARIZATION LAYER FOR ORGANIC ELECTRONIC DEVICES

(51) International classification :C08F232/08,H01L51/05
(31) Priority Document No :12000974.1
(32) Priority Date :15/02/2012
(33) Name of priority country :EPO
(86) International Application No :PCT/EP2013/000255
Filing Date :29/01/2013
(87) International Publication No :WO 2013/120581
(61) Patent of Addition to Application Number :NA
Filing Date :NA
(62) Divisional to Application Number :NA
Filing Date :NA

(71)**Name of Applicant :**
1)MERCK PATENT GMBH
Address of Applicant :Frankfurter Strasse 250, 64293 Darmstadt, GERMANY
2)PROMERUS LLC
(72)**Name of Inventor :**
1)WIERZCHOWIEC, Piotr
2)MISKIEWICZ, Pawel
3)BACKLUND, Tomas
4)TAN, Li Wei
5)BROOKES, Paul, Craig
6)AFONINA, Irina
7)RHODES, Larry, F.
8)BELL, Andrew

(57) Abstract :
The invention relates to organic electronic devices comprising polycycloolefin planarization layers, and more particularly to planarization layers positioned between the substrate and a functional layer e.g. a semiconducting layer, a dielectric layer or an electrode, and further to the use of such a planarization layer in organic electronic devices, and to processes for preparing such polycycloolefin planarization layers and organic electronic devices.

No. of Pages : 72 No. of Claims : 28

(12) PATENT APPLICATION PUBLICATION
(19) INDIA
(22) Date of filing of Application :12/09/2014

(21) Application No.1942/KOLNP/2014 A
(43) Publication Date : 19/12/2014

(54) Title of the invention : CONJUGATED POLYMERS

(51) International classification :C08G61/12,C08L65/00,H01B1/12
(31) Priority Document No :61/598,984
(32) Priority Date :15/02/2012
(33) Name of priority country :U.S.A.
(86) International Application No :PCT/EP2013/000356
Filing Date :06/02/2013
(87) International Publication No :WO 2013/120590
(61) Patent of Addition to Application Number :NA
Filing Date :NA
(62) Divisional to Application Number :NA
Filing Date :NA

(71)**Name of Applicant :**
1)MERCK PATENT GMBH
Address of Applicant :Frankfurter Strasse 250, 64293 Darmstadt, GERMANY
(72)**Name of Inventor :**
1)WALLER, David P.
2)CHEON, Kap-Soo

(57) Abstract :
The invention relates to novel conjugated polymers containing repeating units comprising a halogenated benzene ring, a silolobithiophene moiety, and a benzofused heteroaromatic moiety, to methods for their preparation and educts or intermediates used therein, to polymer blends, mixtures and formulations containing them, to the use of the polymers, polymer blends, mixtures and formulations as organic semiconductors in organic electronic (OE) devices, especially in organic photovoltaic (OPV) devices and organic photodetectors (OPD), and to OE, OPV and OPD devices comprising these polymers, polymer blends, mixtures or formulations.

No. of Pages : 68 No. of Claims : 18

(12) PATENT APPLICATION PUBLICATION
(19) INDIA
(22) Date of filing of Application :12/09/2014
(21) Application No.1943/KOLNP/2014 A
(43) Publication Date : 19/12/2014

(54) Title of the invention : IMMUNOASSAY FOR DETECTION OF SPECIFIC NUCLEIC ACID SEQUENCES SUCH AS MIRNAS

(51) International classification :C12Q1/68
(31) Priority Document No :12159196.0
(32) Priority Date :13/03/2012
(33) Name of priority country :EPO
(86) International Application No :PCT/EP2013/054745
Filing Date :08/03/2013
(87) International Publication No :WO 2013/135581
(61) Patent of Addition to Application Number :NA
Filing Date :NA
(62) Divisional to Application Number :NA
Filing Date :NA

(71)**Name of Applicant :**
1)SIEMENS AKTIENGESELLSCHAFT
Address of Applicant :Wittelsbacherplatz 2, 80333 München, GERMANY
2)SIEMENS HEALTHCARE DIAGNOSTICS HOLDING GMBH
3)SIEMENS HEALTHCARE DIAGNOSTICS INC.
4)SIEMENS HEALTHCARE DIAGNOSTICS PRODUCTS GMBH
(72)**Name of Inventor :**
1)KAPPEL, Andreas
2)KELLER, Andreas
3)STÄHLER, Cord Friedrich
4)WRIGHT, Ian
5)ANDERSON-MAUSER, Linda Marie
6)BEDZYK, William
7)SCHWARZ, Herbert
8)WICKE, Michaela

(57) Abstract :
The invention relates to a method of detecting nucleic acid molecules by immunoassay detection. Detection of a specific nucleic acid molecule of interest is achieved by using a nucleic acid probe in solution which hybridizes in solution to the nucleic acid molecule of interest. Immunoassay detection is achieved by using an antibody specific for the hybrid formed by hybridization of the nucleic acid probe to the nucleic acid molecule of interest.

No. of Pages : 30 No. of Claims : 15

(12) PATENT APPLICATION PUBLICATION
(19) INDIA
(22) Date of filing of Application :12/09/2014

(21) Application No.1944/KOLNP/2014 A
(43) Publication Date : 19/12/2014

(54) Title of the invention : COMPUTER IMPLEMENTED REPORTING SYSTEM AND METHOD

(51) International classification :G06Q10/06
(31) Priority Document No :946/CHE/2012
(32) Priority Date :15/03/2012
(33) Name of priority country :India
(86) International Application No :PCT/GB2013/050574
Filing Date :08/03/2013
(87) International Publication No :WO 2013/136051
(61) Patent of Addition to Application Number :NA
Filing Date :NA
(62) Divisional to Application Number :NA
Filing Date :NA

(71)**Name of Applicant :**
1)KHAN, Anjum
Address of Applicant :The Farm House, 33 Cefn Coed Road, Cyncoed Cardiff, South Glamorgan CF23 6AP, GREAT BRITAIN
(72)**Name of Inventor :**
1)KHAN, Anjum

(57) Abstract :
A computer-implemented system is provided for managing a commercial entity and providing reports. The system comprises a cloud-based reporting component configured to receive transaction-related data from at least one electronic device located at the entity; process the transaction-related data to generate a cash-sheet reconciliation report; communicate at least a portion of the pre-processed or processed data to an accounting component; and provide the cash sheet reconciliation report to a user associated with the entity. The electronic device could be a Point-of-Sale device, cash register, refrigeration apparatus, identity-verification apparatus, or security-related device. The system can be further configured to receive non transaction-related data relating to the entity, in respect of an environmental factor, the status of a device, an employee or other person, or a customer. The system provides an intermediary component which replaces the role of a book keeper by integrating the data from the devices with an accountancy software component.

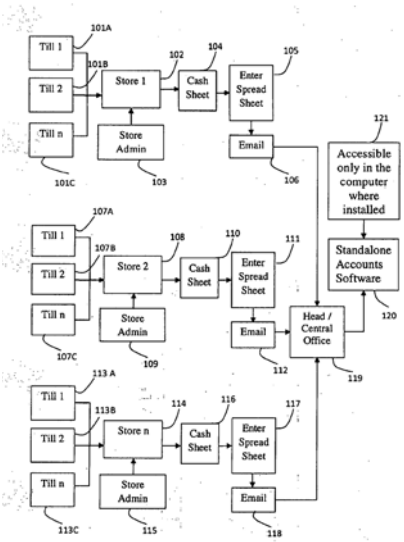

No. of Pages : 36 No. of Claims : 30

(12) PATENT APPLICATION PUBLICATION
(19) INDIA
(22) Date of filing of Application :22/09/2014

(21) Application No.2021/KOLNP/2014 A
(43) Publication Date : 19/12/2014

(54) Title of the invention : POLLUTANT ABATEMENT SYSTEM FOR GASOLINE VEHICLES

(51) International classification :B01D53/94,F01N3/035,F01N3/10
(31) Priority Document No :12164142.7
(32) Priority Date :13/04/2012
(33) Name of priority country :EPO
(86) International Application No :PCT/EP2013/057432
Filing Date :10/04/2013
(87) International Publication No :WO 2013/153081
(61) Patent of Addition to Application Number :NA
Filing Date :NA
(62) Divisional to Application Number :NA
Filing Date :NA

(71)**Name of Applicant :**
1)UMICORE AG & CO. KG
Address of Applicant :Rodenbacher Chaussee 4, 63457 Hanau-Wolfgang GERMANY
(72)**Name of Inventor :**
1)KLINGMANN, Raoul
2)SPIESS, Stephanie
3)WONG, Ka-Fai
4)RICHTER, Joerg-Michael

(57) Abstract :
The present invention is directed to a pollutant abatement system for vehicles propelled by a gasoline combustion engine, in particular a gasoline direct injection engine (GDI). In addition, this invention is concerned with a process of mitigating noxious compounds in the exhaust of such an engine efficiently by applying the inventive abatement system to fulfill future legislative exhaust regulations.

No. of Pages : 30 No. of Claims : 11

(12) PATENT APPLICATION PUBLICATION
(19) INDIA
(22) Date of filing of Application :12/09/2014
(21) Application No.1939/KOLNP/2014 A
(43) Publication Date : 19/12/2014

(54) Title of the invention : QUALITY CONTROL FOR A PRESSURE RELIEF DEVICE

(51) International classification :F16K37/00,F16K17/16
(31) Priority Document No :61/633,570
(32) Priority Date :14/02/2012
(33) Name of priority country :U.S.A.
(86) International Application No :PCT/US2013/026114
Filing Date :14/02/2013
(87) International Publication No :WO 2013/123170
(61) Patent of Addition to Application Number :NA
Filing Date :NA
(62) Divisional to Application Number :NA
Filing Date :NA

(71)**Name of Applicant :**
1)BS&B SAFETY SYSTEMS LIMITED
Address of Applicant :Bay G-1, Raheen Industrial Est. Raheen County Limerick IRELAND
(72)**Name of Inventor :**
1)TOMASKO, John
2)GOGGIN, Paul
3)BRAZIER, Geoffrey

(57) Abstract :
A system and associated methods of quality control for a pressure relief device are disclosed. More specifically, a system and method including one or more of non-destructive dimensional or visual verification, unique identification (e.g., serialization), and image capture of a pressure relief device or a constituent component of such a device are disclosed. A system and method are disclosed in which a checked physical attribute of a pressure relief device, or component thereof, is compared against a statistically expected attribute to determine whether the device or component is suitable for further manufacture or delivery to a customer.

No. of Pages : 31 No. of Claims : 58

(12) PATENT APPLICATION PUBLICATION
(19) INDIA
(22) Date of filing of Application :12/09/2014
(21) Application No.1940/KOLNP/2014 A
(43) Publication Date : 19/12/2014

(54) Title of the invention : SWITCHING DEVICE, IN PARTICULAR LOAD INTERRUPTER

(51) International classification :H01H3/42,H01H33/666
(31) Priority Document No :10 2012 204 049.8
(32) Priority Date :15/03/2012
(33) Name of priority country :Germany
(86) International Application No :PCT/EP2013/054181
Filing Date :01/03/2013
(87) International Publication No :WO 2013/135505
(61) Patent of Addition to Application Number :NA
Filing Date :NA
(62) Divisional to Application Number :NA
Filing Date :NA

(71)**Name of Applicant :**
1)SIEMENS AKTIENGESELLSCHAFT
Address of Applicant :Wittelsbacherplatz 2, 80333 München, GERMANY.
(72)**Name of Inventor :**
1)Stefan WOLF
2)Rene ZLYDNIK
3)Marco ADELMANN
4)Kristian ERMELER

(57) Abstract :
In order to develop a switching device (1), in particular a load interrupter for medium-voltage switchgear assemblies, comprising a main contact system (4) and a quenching contact system (5) connected in series to the main contact system (4), wherein the main contact system (4) and the quenching contact system (5) are arranged linearly one behind the other, said switching device having a simple and compact and thus low-cost design, it is proposed that a single drive is provided for introducing a driving motion into a single drive shaft of the switching device (1), wherein a single cam disk (14) for transmitting the driving motion has a main contact system curved path (16) for actuating the main contact system (4) and a quenching contact system curved path (15) for actuating the quenching contact system (5).

No. of Pages : 24 No. of Claims : 8

(12) PATENT APPLICATION PUBLICATION
(19) INDIA
(22) Date of filing of Application :22/09/2014
(21) Application No.2019/KOLNP/2014 A
(43) Publication Date : 19/12/2014

(54) Title of the invention : AXMI345 DELTA-ENDOTOXIN GENE AND METHODS FOR ITS USE

(51) International classification :C07K14/325
(31) Priority Document No :61/608,317
(32) Priority Date :08/03/2012
(33) Name of priority country :U.S.A.
(86) International Application No :PCT/US2013/029666
Filing Date :07/03/2013
(87) International Publication No :WO 2013/134535
(61) Patent of Addition to Application Number :NA
Filing Date :NA
(62) Divisional to Application Number :NA
Filing Date :NA

(71)**Name of Applicant :**
1)ATHENIX CORP.
Address of Applicant :3500 Paramount Parkway, Morrisville, NC 27560 UNITED STATES OF AMERICA.
(72)**Name of Inventor :**
1)SAMPSON, Kimberly
2)THAYER, Rebecca
3)LEHTINEN, Duane

(57) Abstract :
Compositions and methods for conferring pesticidal activity to bacteria, plants, plant cells, tissues and seeds are provided. Compositions comprising a coding sequence for a toxin polypeptide are provided. The coding sequences can be used in DNA constructs or expression cassettes for transformation and expression in plants and bacteria. Compositions also comprise transformed bacteria, plants, plant cells, tissues, and seeds. In particular, isolated toxin nucleic acid molecules are provided. Additionally, amino acid sequences corresponding to the polynucleotides are encompassed, and antibodies specifically binding to those amino acid sequences. In particular, the present invention provides for isolated nucleic acid molecules comprising nucleotide sequences encoding the amino acid sequence shown in SEQ ID NO:2, or the nucleotide sequence set forth in SEQ ID NO: 1 or 3, as well as variants and fragments thereof.

No. of Pages : 47 No. of Claims : 24

(12) PATENT APPLICATION PUBLICATION
(19) INDIA
(22) Date of filing of Application :22/09/2014
(21) Application No.2020/KOLNP/2014 A
(43) Publication Date : 19/12/2014

(54) Title of the invention : BACILLUS THURINGIENSIS TOXIN GENE AXMI335 AND METHODS FOR ITS USE

(51) International classification :C07K14/32,C12N15/82
(31) Priority Document No :61/608,303
(32) Priority Date :08/03/2012
(33) Name of priority country :U.S.A.
(86) International Application No :PCT/US2013/029647
Filing Date :07/03/2013
(87) International Publication No :WO 2013/134523
(61) Patent of Addition to Application Number :NA
Filing Date :NA
(62) Divisional to Application Number :NA
Filing Date :NA

(71)**Name of Applicant :**
1)ATHENIX CORP.
Address of Applicant :3500 Paramount Parkway, Morrisville, NC 27560 UNITED STATES OF AMERICA.
(72)**Name of Inventor :**
1)SAMPSON, Kimberly, S.
2)THAYER, Rebecca
3)LEHTINEN, Duane

(57) Abstract :
Compositions and methods for conferring pesticidal activity to bacteria, plants, plant cells, tissues and seeds are provided. Compositions comprising a coding sequence for a toxin polypeptide are provided. The coding sequences can be used in DNA constructs or expression cassettes for transformation and expression in plants and bacteria. Compositions also comprise transformed bacteria, plants, plant cells, tissues, and seeds. In particular, isolated toxin nucleic acid molecules are provided. Additionally, amino acid sequences corresponding to the polynucleotides are encompassed and antibodies specifically binding to those amino acid sequences. In particular, the present invention provides for isolated nucleic acid molecules comprising nucleotide sequences encoding the amino acid sequence shown in SEQ ID NO:2 or 4, or the nucleotide sequence set forth in SEQ ID NO: 1 or 3, as well as variants and fragments thereof.

No. of Pages : 47 No. of Claims : 24

(12) PATENT APPLICATION PUBLICATION
(19) INDIA
(22) Date of filing of Application :28/05/2012

(21) Application No.1284/KOLNP/2012 A
(43) Publication Date : 19/12/2014

(54) Title of the invention : EXPANDED POWER AUTOMATION SYSTEM

(51) International classification :H02J13/00
(31) Priority Document No :NA
(32) Priority Date :NA
(33) Name of priority country :NA
(86) International Application No :PCT/EP2009/067629
Filing Date :21/12/2009
(87) International Publication No :WO 2011/076242
(61) Patent of Addition to Application Number :NA
Filing Date :NA
(62) Divisional to Application Number :NA
Filing Date :NA

(71)**Name of Applicant :**
1)SIEMENS AKTIENGESELLSCHAFT
Address of Applicant :WITTELSBACHERPLATZ 2 80333 MÜNCHEN GERMANY
(72)**Name of Inventor :**
1)FÜRST, GERHARD
2)MITTER, BERND
3)SEIDENBECHER, THOMAS
4)SEZI, TEVFIK
5)WAGNER, MARCO

(57) Abstract :
The invention relates to a power automation system (10) for an electrical power supply network (11) , comprising field devices (14), which are connected both to sensors (12) for detecting measured values and to a higher-order communication bus (15) , at least one station control device (16), which is connected both to the communication bus (15) and to a higher-order control centre communication connection, and at least one network control centre device (18a, 18b), which is connected to the control centre communication connection (17) . The field devices (14), the station control device (16) and the network control centre device (18a, 18b) are equipped to process operation management data, and the communication bus (15) and the control centre communication connection (17) are equipped to transmit the operation management data to a first communication protocol or to a first data transmission service. In order to expand the functional scope of such a power automation system, without impairing operational safety, availability and reliability, according to the invention the field devices (14), the station control device (16) and the network control centre device (17) are also equipped to process electrical power quality data, and the communication bus (15) and the control centre communication connection (18a, 18b) are also equipped to transmit the electrical power quality data to a second communication protocol or to a second data transmission service.

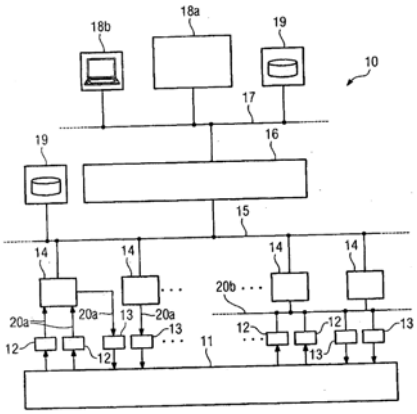

No. of Pages : 40 No. of Claims : 7

(12) PATENT APPLICATION PUBLICATION
(19) INDIA
(22) Date of filing of Application :28/06/2012

(21) Application No.1579/KOLNP/2012 A
(43) Publication Date : 19/12/2014

(54) Title of the invention : SOLAR SYSTEM FOR GENERATING ELECTRIC POWER.

(51) International classification :H01L31/00
(31) Priority Document No :61/297,747
(32) Priority Date :23/01/2010
(33) Name of priority country :U.S.A.
(86) International Application No :PCT/IL2011/000073
Filing Date :23/01/2011
(87) International Publication No :WO 2011/089607
(61) Patent of Addition to Application Number :NA
Filing Date :NA
(62) Divisional to Application Number :NA
Filing Date :NA

(71)**Name of Applicant :**
1)SOLARWAT LTD.
Address of Applicant :100 HAPALMACH ST., 45000 EVEN YEHUDA, ISRAEL.
(72)**Name of Inventor :**
1)WATELMACHER, BORIS

(57) Abstract :
A solar power generation system for providing operating power for a desired application, the system includes one or more solar-array modules, wherein each of the one or more solar-array modules includes a multiplicity of solar cells and a high efficiency DC to DC power converter. The multiplicity of solar cells is arranged in strings of serial-units electrically connected in parallel to form a crisscross matrix array of solar cells, which matrix allows currents to bypass malfunctioning cells, thereby improving the performance of the system. The power converter includes fast MOSFET transistors having duty cycle that is operationally constant and is almost 50%. Optionally, the power converter includes a plus conductive pad and a minus conductive pad, wherein each of the strings of serial-units is individually wired to the plus conductive pad and the minus conductive pad.

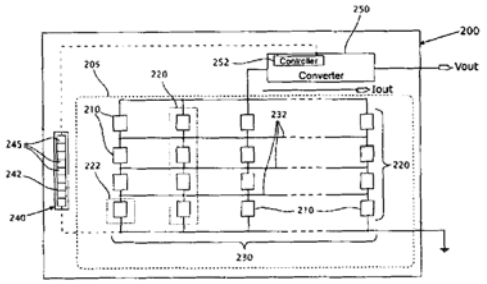

No. of Pages : 41 No. of Claims : 13

(12) PATENT APPLICATION PUBLICATION
(19) INDIA
(22) Date of filing of Application :23/09/2014

(21) Application No.2025/KOLNP/2014 A
(43) Publication Date : 19/12/2014

(54) Title of the invention : ROUTING A DATA PACKET IN A COMMUNICATION NETWORK

(51) International classification :H04L12/721,H04L12/741
(31) Priority Document No :61/613,131
(32) Priority Date :20/03/2012
(33) Name of priority country :U.S.A.
(86) International Application No :PCT/US2013/031714
Filing Date :14/03/2013
(87) International Publication No :WO 2013/142282
(61) Patent of Addition to Application Number :NA
Filing Date :NA
(62) Divisional to Application Number :NA
Filing Date :NA

(71)**Name of Applicant :**
1)RAYTHEON COMPANY
Address of Applicant :870 Winter Street, Waltham, Massachusetts 02451-1449 UNITED STATES OF AMERICA
(72)**Name of Inventor :**
1)WANG, Mu-Cheng
2)DAVIDSON Steven A.
3)CHUANG,Yi-Chao,S.

(57) Abstract :
In one aspect, a method includes receiving a data packet at a routing node that includes a processor. The method also includes determining at least one value for the data packet, selecting a routing table from a plurality of routing tables stored at the routing node in response to the at least one value for the packet and forwarding the data packet in response to the routing table selected. Each routing table is associated with a respective one cost function.

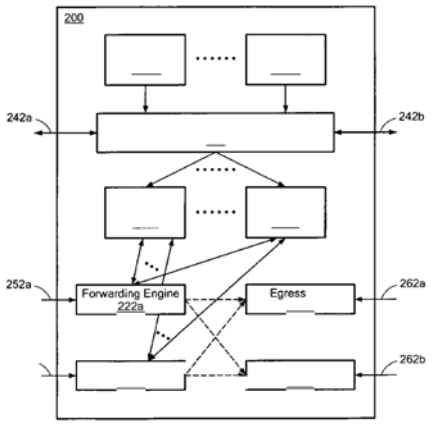

No. of Pages : 20 No. of Claims : 19

(12) PATENT APPLICATION PUBLICATION
(19) INDIA
(22) Date of filing of Application :23/09/2014

(21) Application No.2027/KOLNP/2014 A
(43) Publication Date : 19/12/2014

(54) Title of the invention : LOW EMISSIONS OXIDATIVE DEHYDROGENATION PROCESS FOR PRODUCING BUTADIENE

(51) International classification	:C07C5/333,C07C11/167,C07C11/08
(31) Priority Document No	:61/617,535
(32) Priority Date	:29/03/2012
(33) Name of priority country	:U.S.A.
(86) International Application No	:PCT/US2013/034205
Filing Date	:28/03/2013
(87) International Publication No	:WO 2013/148908
(61) Patent of Addition to Application Number	:NA
Filing Date	:NA
(62) Divisional to Application Number	:NA
Filing Date	:NA

(71)**Name of Applicant :**
1)TPC GROUP LLC
Address of Applicant :One Allen Center, Suite 1000, 500 Dallas Street, Houston,Texas 77002, United states of America
(72)**Name of Inventor :**
1)CACIULA Liana
2)DUFF Joseph G.
3)BALLARD Elizabeth
4)POTTER Mark J
5)CHADA Sirisha

(57) Abstract :
Butadiene is formed by dehydrogenation of butenes which are mixed with steam and oxygen then converted to butadiene by oxidative dehydrogenation over a ferritic oxide catalyst, wherein the sensible heat in the oxidative dehydrogenation reaction product is utilized along with heat produced by thermal oxidation of low value volatile products formed to reduce energy requirements and CO2 emissions. Sensible heat is utilized at high temperature for purposes of superheating feed and at somewhat lower temperatures for purposes of vaporizing feed at sequential locations in the process.

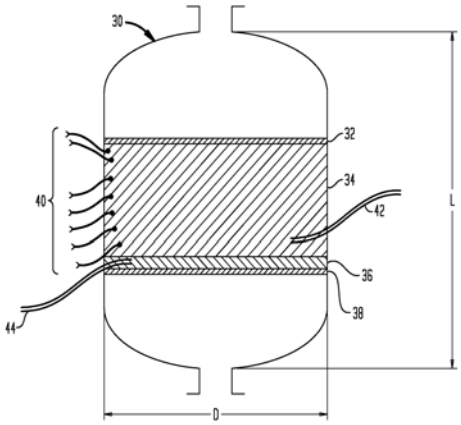

No. of Pages : 51 No. of Claims : 50

(12) PATENT APPLICATION PUBLICATION
(19) INDIA
(22) Date of filing of Application :01/09/2014

(21) Application No.1868/KOLNP/2014 A
(43) Publication Date : 19/12/2014

(54) Title of the invention : METHOD FOR JOINING METAL PARTS

(51) International classification	:B23K35/00,B23K35/02,B23K35/365
(31) Priority Document No	:12161742.7
(32) Priority Date	:28/03/2012
(33) Name of priority country	:EPO
(86) International Application No	:PCT/EP2013/056530
Filing Date	:27/03/2013
(87) International Publication No	:WO 2013/144211
(61) Patent of Addition to Application Number	:NA
Filing Date	:NA
(62) Divisional to Application Number	:NA
Filing Date	:NA

(71)**Name of Applicant :**
1)ALFA LAVAL CORPORATE AB
Address of Applicant :P. O. Box 73, SE-221 00 Lund, SWEDEN
(72)**Name of Inventor :**
1)SJÖDIN, Per
2)WALTER, Kristian

(57) Abstract :
A method for joining a first metal part (11) with a second metal part (12) the metal parts (11 12) having a solidus temperature above 1100 QC. The method comprises: applying a melting depressant composition (14) on a surface (15) of the first metal part (11) the melting depressant composition (14) comprising a melting depressant component that comprises at least 25 wt% boron and silicon for decreasing a melting temperature of the first metal part (11); bringing (202) the second metal part (12) into contact with the melting depressant composition (14) at a contact point (16) on said surface (15); heating the first and second metal parts (11 12) to a temperature above 1 100 QC; and allowing a melted metal layer (210) of the first metal component (11) to solidify such that a joint (25) is obtained at the contact point (16). The melting depressant composition and related products are also described.

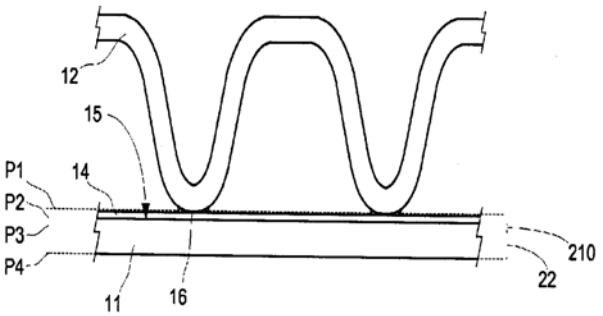

No. of Pages : 50 No. of Claims : 29

(12) PATENT APPLICATION PUBLICATION
(19) INDIA
(22) Date of filing of Application :15/09/2014

(21) Application No.1951/KOLNP/2014 A
(43) Publication Date : 19/12/2014

(54) Title of the invention : VIRTUALIZED OPEN WIRELESS SERVICES SOFTWARE ARCHITECTURE

(51) International classification :G06F9/46
(31) Priority Document No :NA
(32) Priority Date :NA
(33) Name of priority country :NA
(86) International Application No :PCT/US2012/025577
Filing Date :17/02/2012
(87) International Publication No :WO 2013/122597
(61) Patent of Addition to Application Number :NA
Filing Date :NA
(62) Divisional to Application Number :NA
Filing Date :NA

(71)**Name of Applicant :**
1)AFFIRMED NETWORKS, INC.
Address of Applicant :35 Nagog Park, 1st Floor, Acton, MA 01720 UNITED STATES OF AMERICA.
(72)**Name of Inventor :**
1)LOGAN, James, J.
2)GARG, Deepak
3)MORTSOLF, Tim

(57) Abstract :
Methods and apparatus, including computer program products, for virtualized open wireless services software architecture. A method includes, in a mobile network, monitoring hardware resources for utilization, receiving a request to instantiate a service, selecting a hardware resource that is underutilized, and mapping the service to the underutilized hardware resource.

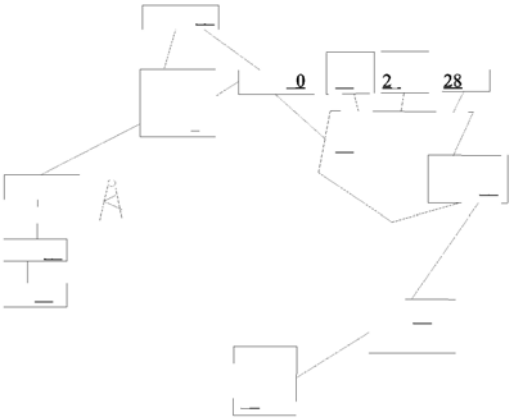

No. of Pages : 19 No. of Claims : 19

(12) PATENT APPLICATION PUBLICATION
(19) INDIA
(22) Date of filing of Application :15/09/2014

(21) Application No.1952/KOLNP/2014 A
(43) Publication Date : 19/12/2014

(54) Title of the invention : ACOUSTOPHORETIC MULTI-COMPONENT SEPARATION TECHNOLOGY PLATFORM

(51) International classification :B01D43/00
(31) Priority Document No :61/611,159
(32) Priority Date :15/03/2012
(33) Name of priority country :U.S.A.
(86) International Application No :PCT/US2013/032705
Filing Date :15/03/2013
(87) International Publication No :WO 2013/138797
(61) Patent of Addition to Application Number :NA
Filing Date :NA
(62) Divisional to Application Number :NA
Filing Date :NA

(71)**Name of Applicant :**
1)FLODESIGN SONICS, INC.
Address of Applicant :380 Main Street, Wilbraham, Massachusetts 01095 U.S.A.
(72)**Name of Inventor :**
1)LIPKENS, Bart
2)DIONNE, Jason
3)KENNEDY, III, Thomas J.
4)MASI, Louis
5)KOWALSKI, III, Stanley

(57) Abstract :
A system having improved trapping force for acoustophoresis is described where the trapping force is improved by manipulation of the frequency of the ultrasonic transducer. The transducer includes a ceramic crystal. The crystal may be directly exposed to fluid flow. The crystal may be air backed, resulting in a higher Q factor.

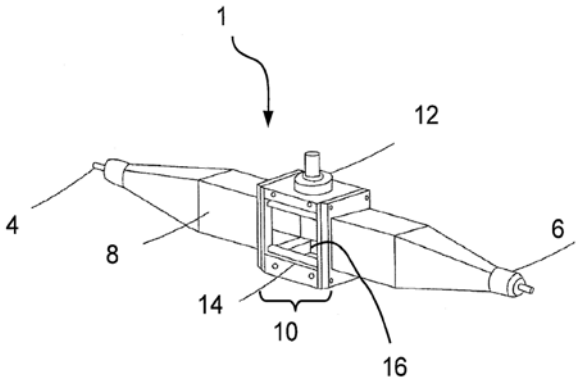

No. of Pages : 45 No. of Claims : 32

(12) PATENT APPLICATION PUBLICATION
(19) INDIA
(22) Date of filing of Application :15/09/2014
(21) Application No.1954/KOLNP/2014 A
(43) Publication Date : 19/12/2014

(54) Title of the invention : AUTOMATED DEVICE AND AUTOMATED PROCESS FOR CELL CULTURE

(51) International classification :C12M3/00,C12M1/00,C12M3/04
(31) Priority Document No :12305310.0
(32) Priority Date :15/03/2012
(33) Name of priority country :EPO
(86) International Application No :PCT/EP2013/055244
Filing Date :14/03/2013
(87) International Publication No :WO 2013/135817
(61) Patent of Addition to Application Number :NA
Filing Date :NA
(62) Divisional to Application Number :NA
Filing Date :NA

(71)**Name of Applicant :**
1)CELLPROTHERA
Address of Applicant :12 rue du Parc F-68100 Mulhouse FRANCE
(72)**Name of Inventor :**
1)HENON, Philippe
2)SAUCOURT, Claire
3)GASSE, Patrick
4)SUNDAS, Alain
5)SUGRANES, Pierre
6)VERDIER, Amandine
7)DEMONCHY, Frédéric

(57) Abstract :
An automated device (10) for cell culture, comprising reservoirs for culture medium, for growth factors and for cells to be cultured, an incubator (12) with a thermostatic chamber (14) in which a cell culture vessel is housed, and a controlling computer system (24), characterized in that it comprises a device (16) for supporting and agitating the culture vessel which is housed in the chamber, and in that the culture vessel is made up of a pouch comprising at least one inlet orifice connected to the above-mentioned reservoirs and one outlet orifice connected to means (42) for recovering and storing the cells after culture, wherein these storage means and the reservoirs are located outside the chamber and are connected to the orifices of the cell expansion pouch via pipes which form, with the cell expansion pouch, a preassembled module and which pass through a chamber wall element, so as to make it possible to supply the cell expansion pouch with culture medium, with growth factors and with cells to be cultured, and to recover the content of the cell expansion pouch in the storage means, while keeping the chamber closed.

No. of Pages : 43 No. of Claims : 24

(12) PATENT APPLICATION PUBLICATION
(19) INDIA
(22) Date of filing of Application :24/09/2014

(21) Application No.2041/KOLNP/2014 A
(43) Publication Date : 19/12/2014

(54) Title of the invention : DEVICE FOR CUTTING HAIRS

(51) International classification :B26B21/12,B26B21/40,A45D24/36
(31) Priority Document No :61/618,155
(32) Priority Date :30/03/2012
(33) Name of priority country :U.S.A.
(86) International Application No :PCT/US2013/033891
Filing Date :26/03/2013
(87) International Publication No :WO 2013/148694
(61) Patent of Addition to Application Number :NA
Filing Date :NA
(62) Divisional to Application Number :NA
Filing Date :NA

(71)**Name of Applicant :**
1)EQUIP BEAUTY,INC.
Address of Applicant :1547 Mariposa Ave. Palo Alto,California,94306 U.S.A.
(72)**Name of Inventor :**
1)CROFT,Rachel

(57) Abstract :
In specific embodiments, a device (100) for cutting hairs comprises a pair of opposing surfaces (105, 107) actuatable so that the hairs are capable of being held between the opposing surfaces with sufficient firmness to allow the hairs to be pulled taut without being cut. The device also includes a cutter actuatable independent of the opposing surfaces and configured to cut the hairs held between the opposing surfaces when the cutter is actuated.

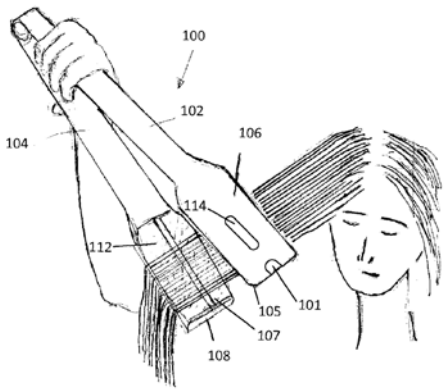

No. of Pages : 40 No. of Claims : 21

(12) PATENT APPLICATION PUBLICATION
(19) INDIA
(22) Date of filing of Application :15/09/2014

(21) Application No.1960/KOLNP/2014 A
(43) Publication Date : 19/12/2014

(54) Title of the invention : STOPPERS TO PREVENT GRAFT MATERIAL SLIPPAGE IN A CLOSED WEB STENT-GRAFT

(51) International classification :A61F2/07
(31) Priority Document No :13/457,475
(32) Priority Date :26/04/2012
(33) Name of priority country :U.S.A.
(86) International Application No :PCT/US2013/026715
Filing Date :19/02/2013
(87) International Publication No :WO 2013/162685
(61) Patent of Addition to Application Number :NA
Filing Date :NA
(62) Divisional to Application Number :NA
Filing Date :NA

(71)**Name of Applicant :**
1)MEDTRONIC VASCULAR INC.
Address of Applicant :C/o IP Legal Department, Medtronic Vascular Inc., 3576 Unocal Place, Santa Rosa, California 95403 U.S.A.
(72)**Name of Inventor :**
1)ACOSTA-ACEVEDO, Luz

(57) Abstract :
A stent-graft has a closed web configuration in which end stent crowns or apexes do not extend beyond an end of a tubular graft. In order to permit interaction of the endmost crowns with tip capture fingers or prongs of a delivery system, the graft covers the endmost crowns but the endmost crowns are not coupled to the graft material and thus free to interact with the delivery system. In order to prevent slippage of the graft material at the endmost crowns and secure the longitudinal position of the graft material, one of a pair of stoppers (214) is coupled on each of the opposing struts between which the unattached endmost crown is formed. In an embodiment, the stoppers are cylindrical tubes of a radiopaque material having a longitudinally-extending slit in a wall thereof

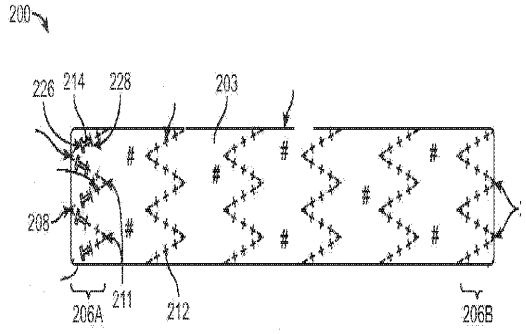

No. of Pages : 20 No. of Claims : 20

(12) PATENT APPLICATION PUBLICATION
(19) INDIA
(22) Date of filing of Application :24/09/2014

(21) Application No.2038/KOLNP/2014 A
(43) Publication Date : 19/12/2014

(54) Title of the invention : IMAGE PROCESSING APPARATUS AND METHOD OF CAMERA DEVICE

(51) International classification	:H04N5/232,G06T3/00,H04N5/367
(31) Priority Document No	:10-2012-0031445
(32) Priority Date	:28/03/2012
(33) Name of priority country	:Republic of Korea
(86) International Application No	:PCT/KR2013/002488
Filing Date	:26/03/2013
(87) International Publication No	:WO 2013/147488
(61) Patent of Addition to Application Number	:NA
Filing Date	:NA
(62) Divisional to Application Number	:NA
Filing Date	:NA

(71)**Name of Applicant :**
1)SAMSUNG ELECTRONICS CO. LTD.
Address of Applicant :129,Samsung-ro Yeongtong-gu, Suwon-si,Gyeonggi-do 443-742,Republic of Korea
(72)**Name of Inventor :**
1)LEE,Yong Gu

(57) Abstract :
An image processing apparatus capable of performing a method for processing the image taken by a camera includes a camera that generates full resolution images. The image processing apparatus also includes a buffer that buffers the full resolution images; a viewing image processor that scales the buffered full resolution images to generate viewing images; a capture image processor that processes one of the buffered full resolution images to generate a capture image; a display unit that displays the viewing images; and a storage unit that stores the capture image.

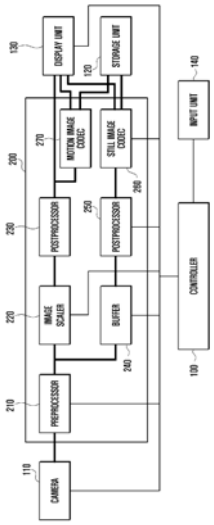

No. of Pages : 68 No. of Claims : 32

(12) PATENT APPLICATION PUBLICATION
(19) INDIA
(22) Date of filing of Application :24/09/2014

(21) Application No.2039/KOLNP/2014 A
(43) Publication Date : 19/12/2014

(54) Title of the invention : DISK BRAKE HAVING A RESTORING DEVICE AND A BRAKE LINING

(51) International classification :F16D65/097,F16D55/226
(31) Priority Document No :10 2012 102 584.3
(32) Priority Date :26/03/2012
(33) Name of priority country :Germany
(86) International Application No :PCT/EP2013/055887
Filing Date :21/03/2013
(87) International Publication No :WO 2013/143957
(61) Patent of Addition to Application Number :NA
Filing Date :NA
(62) Divisional to Application Number :NA
Filing Date :NA

(71)**Name of Applicant :**
1)KNORR-BREMSE SYSTEME FÜR NUTZFAHRZEUGE GMBH
Address of Applicant :Moosacher Straße 80, 80809 München,**Germany**
(72)**Name of Inventor :**
1)BAUMGARTNER,Johann
2)WERTH,Alexander
3)WEGGARTNER,Robert
4)KIELBASA,Rudolf
5)FISCHL,Tobias

(57) Abstract :
A disk brake for a motor vehicle has a brake application device, a floating caliper that reaches over a brake disk (4), preferably a lining wear adjustment device, a brake bracket (2) having guiding surfaces opposite each other in the circumferential direction of the brake disk (4), wherein between the guiding surfaces, on the brake application side and the back side of the brake disk (4), at least one respective brake lining having a lining carrier (7) and having at least one friction lining (6) is guided movably parallel to an axis of rotation of the brake disk (4) and can be actuated by a brake application force, and at least one restoring device, which supports at least the back-side brake lining on the brake bracket (2) by means of the lining carrier (7), wherein the restoring device comprises at least two restoring elements (9), which are attached to the lining carrier (7) of at least the back-side brake lining in such a way that the restoring elements are guided movably parallel to the axis of rotation of the brake disk (4).

No. of Pages : 30 No. of Claims : 13

(12) PATENT APPLICATION PUBLICATION
(19) INDIA
(22) Date of filing of Application :24/09/2014

(21) Application No.2040/KOLNP/2014 A
(43) Publication Date : 19/12/2014

(54) Title of the invention : APPARATUS AND METHOD FOR CHANNEL-STATE-INFORMATION PILOT DESIGN FOR AN ADVANCED WIRELESS NETWORK

(51) International classification :H04B7/04,H04B7/26
(31) Priority Document No :61/618,213
(32) Priority Date :30/03/2012
(33) Name of priority country :U.S.A.
(86) International Application No :PCT/KR2013/002688
Filing Date :01/04/2013
(87) International Publication No :WO 2013/147565
(61) Patent of Addition to Application Number :NA
Filing Date :NA
(62) Divisional to Application Number :NA
Filing Date :NA

(71)**Name of Applicant :**
1)SAMSUNG ELECTRONICS CO. LTD.
Address of Applicant :129,Samsung-ro,Yeongtong-gu, Suwon-si,Gyeonggi-do 443-742 **Republic of Korea**
(72)**Name of Inventor :**
1)NAM Young-Han
2)HAN Jin-Kyu

(57) Abstract :
A base station and mobile station communicate using a multiple input multiple output (MIMO) communication. The base station includes a two dimensional (2D) antenna array comprising a number N of antenna elements configured in a 2D grid. The 2D antenna array is configured to communicate with at least one subscriber station. The base station also includes a controller configured to transmit N channel- state-information reference-signal (CSI-RS) antenna ports (APs) associated with each of the N antenna elements. The subscriber station includes an antenna array configured to communicate with at least one base station. The subscriber station also includes processing circuitry configured receives physical downlink shared channels (PDSCHs) from a 2D active antenna array at the at least one base station. The 2D active antenna array includes a number N antenna elements. The processing circuitry further configured to estimate a full CSI associated with the N antenna elements.

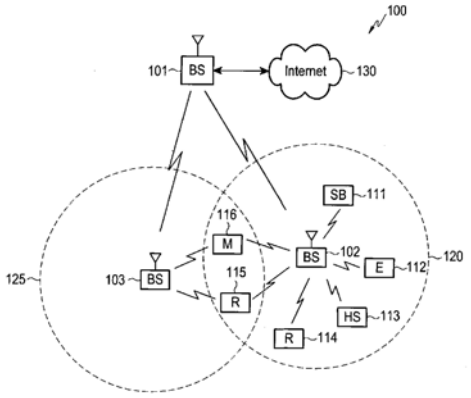

No. of Pages : 60 No. of Claims : 15

(12) PATENT APPLICATION PUBLICATION
(19) INDIA
(22) Date of filing of Application :18/09/2014

(21) Application No.2002/KOLNP/2014 A
(43) Publication Date : 19/12/2014

(54) Title of the invention : A SYSTEM AND A METHOD FOR MONITORING AND CONTROLLING A CRUSHER, A CRUSHER AND A METHOD FOR ADJUSTING A CRUSHER

(51) International classification :B02C2/04,B02C25/00
(31) Priority Document No :20125398
(32) Priority Date :12/04/2012
(33) Name of priority country :Finland
(86) International Application No :PCT/FI2013/050397
Filing Date :11/04/2013
(87) International Publication No :WO 2013/153283
(61) Patent of Addition to Application Number :NA
Filing Date :NA
(62) Divisional to Application Number :NA
Filing Date :NA

(71)**Name of Applicant :**
1)METSO MINERALS, INC.
Address of Applicant :Fabianinkatu 9 A, FI-00130 Helsinki **Finland**
(72)**Name of Inventor :**
1)SALONEN, Marko

(57) Abstract :
A method and a system for monitoring a gyratory or cone crusher (200) comprises a measuring apparatus (215) suitable for measuring load of the crusher; a first element (212) to be placed on a main shaft of the crusher and a first detector (213) suitable for detecting the first element which first detector provides a trigger starting a measurement revolution; and at least one second element (208,209,210) to be placed on a drive shaft of the crusher and a second detector (211) suitable for detecting the second element which second detector provides a trigger corresponding to a certain rotational position of an inner blade (201) of the crusher. The system comprises an output to a screen for presenting the loads or averages of the loads corresponding to rotational positions of the inner blade of the crusher. Detections of the monitoring system can be used for controlling and monitoring a crushing event for example by changing an area or a location of a feed opening of the crusher (200).

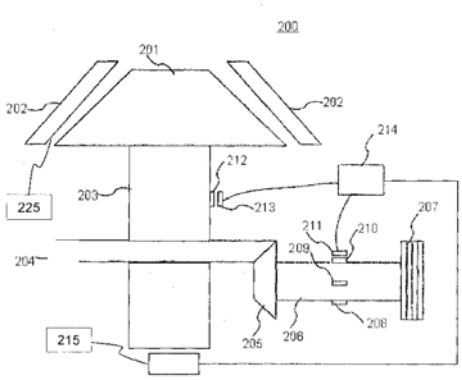

No. of Pages : 27 No. of Claims : 27

(12) PATENT APPLICATION PUBLICATION
(19) INDIA
(22) Date of filing of Application :18/09/2014

(21) Application No.2003/KOLNP/2014 A
(43) Publication Date : 19/12/2014

(54) Title of the invention : FILTER DEVICE AND METHOD FOR FILTERING A SUSPENSION

(51) International classification :B01D25/12,B01D25/30
(31) Priority Document No :NA
(32) Priority Date :NA
(33) Name of priority country :NA
(86) International Application No :PCT/EP2012/057204
Filing Date :19/04/2012
(87) International Publication No :WO 2013/156073
(61) Patent of Addition to Application Number :NA
Filing Date :NA
(62) Divisional to Application Number :NA
Filing Date :NA

(71)**Name of Applicant :**
1)OUTOTEC (FINLAND) OY
Address of Applicant :Puolikkotie 10 FI-02230 Espoo **Finland**
(72)**Name of Inventor :**
1)BÖHNKE, Bernd

(57) Abstract :
The invention relates to a filter device for filtering a suspension, wherein between a stationary head piece and a movable end piece, the filter device has a pack of at least a recess plate (1) and an adjacent recess plate (1), wherein running to the end piece through the pack, including through the recess plate (1) and the adjacent recess plate (1), the filter device has a suspension pipe (7) for piping a first stream of the suspension from the head piece into the pack, wherein connecting to the end piece, the filter device has a supply pipe (8) for piping a second stream of the suspension into the suspension pipe (7), wherein forming a filter chamber between the recess plate (1) and the adjacent recess plate (1), the recess plate (1) and/or the adjacent recess plate (1) has a recess (11), wherein from the suspension pipe (7), the recess plate (1) has a suspension duct (13) for piping the suspension into the filter chamber, and wherein between the recess plate (1) and the adjacent recess plate (1), the filter device has at least one filter cloth (14) for filtering a solid content out of the suspension. The invention further relates to a method for filtering a suspension in such a filter device. For avoiding the drawbacks of the state of the art, according to the invention it is suggested that the supply pipe (8) runs from the head piece to the end piece through the pack, including through the recess plate (1) and the adjacent recess plate (1).

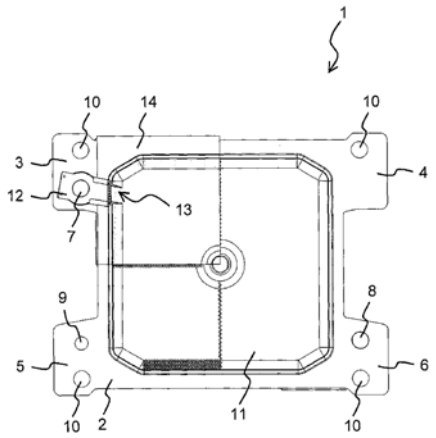

No. of Pages : 11 No. of Claims : 5

(12) PATENT APPLICATION PUBLICATION
(19) INDIA
(22) Date of filing of Application :18/09/2014

(21) Application No.2004/KOLNP/2014 A
(43) Publication Date : 19/12/2014

(54) Title of the invention : METHODS AND BIOMARKERS FOR DETECTION AND CERVICAL CANCER PROGNOSIS OF

(51) International classification :G01N33/574
(31) Priority Document No :61/601,194
(32) Priority Date :21/02/2012
(33) Name of priority country :U.S.A.
(86) International Application No :PCT/IB2013/000664
Filing Date :20/02/2013
(87) International Publication No :WO 2013/124738
(61) Patent of Addition to Application Number :NA
Filing Date :NA
(62) Divisional to Application Number :NA
Filing Date :NA

(71)**Name of Applicant :**
1)OSLO UNIVERSITETSSYKEHUS HF
Address of Applicant :Postboks 450 Nydalen, N-0424 Oslo, NORWAY
(72)**Name of Inventor :**
1)LYNG, Heidi
2)JULIN, Cathinka, Halle

(57) Abstract :
The present invention relates to methods and biomarkers for detection of cervical cancer in biological samples, and in particular to markers associated with hypoxia related to the cervical cancer.

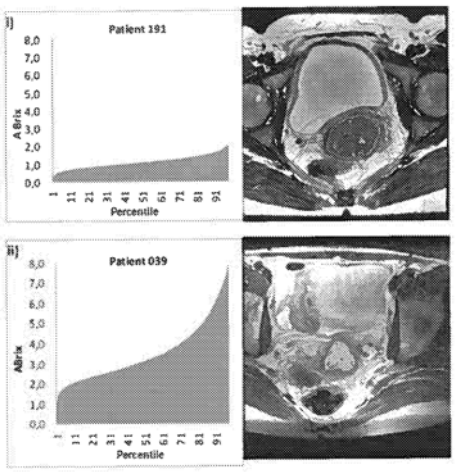

No. of Pages : 68 No. of Claims : 44

(12) PATENT APPLICATION PUBLICATION
(19) INDIA
(22) Date of filing of Application :31/03/2014

(21) Application No.416/KOL/2014 A
(43) Publication Date : 19/12/2014

(54) Title of the invention : HEAT-GENERATING DEVICE FOR THERMOTHERAPY APPARATUS

(51) International classification	:G03G 15/00
(31) Priority Document No	:10-2013-0068369
(32) Priority Date	:14/06/2013
(33) Name of priority country	:Republic of Korea
(86) International Application No	:NA
Filing Date	:NA
(87) International Publication No	: NA
(61) Patent of Addition to Application Number	:NA
Filing Date	:NA
(62) Divisional to Application Number	:NA
Filing Date	:NA

(71)**Name of Applicant :**
1)CERAGEM CO.,LTD
Address of Applicant :177-14 OSAEKDANG-RI,SEONGGEO-EUP, SEOBUK-GU,CHEONAN-SI, CHUNGCHEONGNAM-DO,330-060 **Republic of Korea**
(72)**Name of Inventor :**
1)LEE,SANG-MIN
2)LEE,DONG-MYOUNG
3)YU,HO-SANG
4)YU,JOON-WOO
5)KANG,DAE-HYUN

(57) Abstract :
The present invention is directed to a heat-generating device for a thermotherapy apparatus, and more particularly, to a heat-generating device including: a fixing holder (10) having a receiving part (11); a heat-conducting means (20) including a first heat-conducting member (20A) mounted to the fixing holder (10) and a second heat-conducting member (20B) coupled to the fixing holder (10) and providing radiant heat to a roll member (50); a power supplying unit (30) consisting of a first power terminal (31) connected to the first heat-conducting member (20)A and a second power terminal (32) connected to the second heat- conducting member (20B); and a heat-generating member (40) being in contact with all or a part of each heat-conducting member. Thus, the present invention discloses the heat-generating device for the thermotherapy apparatus constructed such that the heat-generating member is in contact with the heat-conducting means to transfer heat generated in the heat-generating member to the roll member through the heat- conducting means so that heat conduction efficiency is increased and it is possible to reduce an initial time for generating heat.

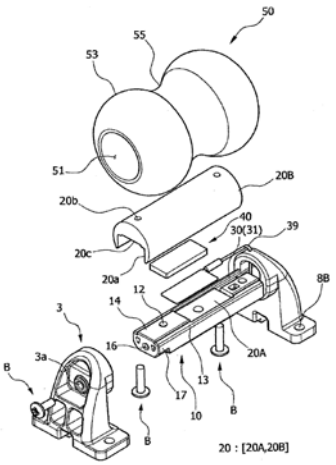

No. of Pages : 28 No. of Claims : 10

(12) PATENT APPLICATION PUBLICATION
(19) INDIA
(22) Date of filing of Application :05/09/2014

(21) Application No.1911/KOLNP/2014 A
(43) Publication Date : 19/12/2014

(54) Title of the invention : PROCESS AND PLANT FOR PRODUCING A SOLID PRODUCT

(51) International classification	:A23C 3/037,F28C 3/08
(31) Priority Document No	:NA
(32) Priority Date	:NA
(33) Name of priority country	:NA
(86) International Application No	:PCT/EP2012/053908
Filing Date	:07/03/2012
(87) International Publication No	:WO 2013/131563
(61) Patent of Addition to Application Number	:NA
Filing Date	:NA
(62) Divisional to Application Number	:NA
Filing Date	:NA

(71)**Name of Applicant :**
1)ALFA LAVAL CORPORATE AB
Address of Applicant :Box 73, SE - 22100 Lund, **Sweden**
(72)**Name of Inventor :**
1)AUNBIRK, NIELS

(57) Abstract :
The present invention concerns a process for producing a solid product and a liquid product, comprising the steps of a. heating by direct steam injection a finely divided starting material, b. separating the heated starting material in the solid product and an aqueous liquid, c. heating and pressurizing the aqueous liquid, and d. reducing the pressure of the aqueous liquid thereby generating steam and the liquid product, wherein the steam generated in step d is returned to step a for injection into the finely divided starting material. The process suggests a solution for extracting the additional water appearing in the aqueous liquid due to condensed steam.

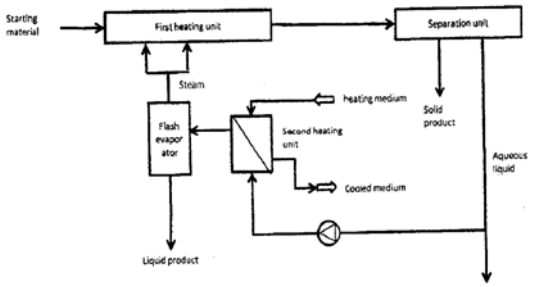

No. of Pages : 32 No. of Claims : 24

(12) PATENT APPLICATION PUBLICATION
(19) INDIA
(22) Date of filing of Application :08/09/2014
(21) Application No.1912/KOLNP/2014 A
(43) Publication Date : 19/12/2014

(54) Title of the invention : CO-USE OF A CLUSTERIN INHIBITOR WITH AN EGFR INHIBITOR TO TREAT CANCER

(51) International classification	:A61K39/395,A61K31/5377,A61P35/00
(31) Priority Document No	:61/601,786
(32) Priority Date	:22/02/2012
(33) Name of priority country	:U.S.A.
(86) International Application No Filing Date	:PCT/CA2013/000167 :22/02/2013
(87) International Publication No	:WO 2013/123588
(61) Patent of Addition to Application Number Filing Date	:NA :NA
(62) Divisional to Application Number Filing Date	:NA :NA

(71)**Name of Applicant :**
1)ALETHIA BIOTHERAPEUTICS INC.
Address of Applicant :141 President-Kennedy Avenue, Suite SB-5100, Montreal, Quebec, H2X 1Y4 **CANADA**
(72)**Name of Inventor :**
1)TREMBLAY, Gilles Bernard
2)VIAU, Elisabeth
3)FILION, Mario

(57) Abstract :
Epidermal growth factor receptor (EGFR) expression and phosphorylation is increased in cancer cells treated with anti-clusterin antibodies. Such treatment is also accompanied with the reappearance of an epithelial phenotype of the cancer cell, as determined by an increased E-cadherin expression at the surface of cancer cells. Clusterin inhibitors may thus induce reversal of the epithelial to mesenchymal phenotype and restore sensitivity of cancer cells to EGFR inhibitors. Combinations of a clusterin inhibitor and an EGFR as well as their use in treatment of cancer are thus provided herewith.

No. of Pages : 43 No. of Claims : 34

(12) PATENT APPLICATION PUBLICATION
(19) INDIA
(22) Date of filing of Application :08/09/2014
(21) Application No.1915/KOLNP/2014 A
(43) Publication Date : 19/12/2014

(54) Title of the invention : AXIAL FAN

(51) International classification :F04D29/38
(31) Priority Document No :102012004617.0
(32) Priority Date :06/03/2012
(33) Name of priority country :Germany
(86) International Application No :PCT/EP2013/000649
Filing Date :06/03/2013
(87) International Publication No :WO 2013/131641
(61) Patent of Addition to Application Number :NA
Filing Date :NA
(62) Divisional to Application Number :NA
Filing Date :NA

(71)**Name of Applicant :**
1)ZIEHL-ABEGG SE
Address of Applicant :Heinz-Ziehl-Straße, 74653 Künzelsau, **Germany**
(72)**Name of Inventor :**
1)SADI, Omar
2)GROSS, Andreas
3)ERNEMANN, Lothar
4)LÖCHER, Frieder

(57) Abstract :
The axial fan has a motor (1), on the rotor side of which an impeller is fixed, wherein fan blades (24) with a front and a rear edge (26, 27) project from the hub of said impeller. The motor (1) is fixed to a housing (3) by means of a suspension (2). The suspension has a bracing part (4 to 8) made of a flat material, said bracing part connecting the motor (1) to the housing (3) and being arranged in an approximately vertical manner in the flow direction of the air. The aim of the invention is to design the axial fan such that the axial fan has a high overall efficiency and only a low flow resistance. This is achieved in that the bracing part (4 to 8) is provided with at least one recess (7) over a part of the length of the bracing part. The flow resistance due to the bracing part is minimized by means of the recess. The recess reduces the weight of the axial fan. The noise emitted by the axial fan is significantly reduced because the size of vortex-related flow separation regions is significantly reduced by means of the recess.

No. of Pages : 35 No. of Claims : 22

(12) PATENT APPLICATION PUBLICATION
(19) INDIA
(22) Date of filing of Application :06/06/2014

(21) Application No.621/KOL/2014 A
(43) Publication Date : 19/12/2014

(54) Title of the invention : MULTI-MODE CONTINUOUSLY VARIABLE TRANSMISSION MECHANISM

(51) International classification	:F16H 55/00
(31) Priority Document No	:102120920
(32) Priority Date	:13/06/2013
(33) Name of priority country	:Taiwan
(86) International Application No	:NA
Filing Date	:NA
(87) International Publication No	: NA
(61) Patent of Addition to Application Number	:NA
Filing Date	:NA
(62) Divisional to Application Number	:NA
Filing Date	:NA

(71)**Name of Applicant :**
1)SANYANG INDUSTRY CO. LTD.
Address of Applicant :184 KENG TZU KOU, SHANG KENG VILLAGE, HSIN FONG SHIANG, HSINCHU, **TAIWAN**
(72)**Name of Inventor :**
1)CHOU PO-YU
2)CHEN WEI-YU
3)LU WEI-MING
4)CHOU MING-HSUAN
5)LIU FAN YI

(57) Abstract :
A multi-mode continuously variable transmission mechanism includes an input shaft, a driving pulley assembly, and a switching module. The driving pulley assembly includes a driving face, a ramp plate, a movable driving face, and a plurality of driving elements. The driving face and the ramp plate are coaxially fixed on the input shaft. The movable driving face is arranged between the driving face and the ramp plate, and is coaxially and slidably arranged on the input shaft. The plural driving elements are arranged between the movable driving face and the ramp plate. Upon rotation of the input shaft, the plural driving elements will push the movable driving face, subject to centrifugal force, to slide along the input shaft. The multi-mode continuously variable transmission mechanism is characterized in that the ramp plate is provided with a plurality of slots, and that the driving pulley assembly includes a movable pressing board which is provided with a plurality of protrusions and which is arranged outside of the ramp plate and which is coaxially and slidably arranged on the input shaft,and that the protrusions each extends into a slot correspondingly such that the movable pressing board is connected with the switching module so as to govern axial motion of the movable pressing board.

No. of Pages : 18 No. of Claims : 7

(12) PATENT APPLICATION PUBLICATION
(19) INDIA
(22) Date of filing of Application :24/09/2014

(21) Application No.2033/KOLNP/2014 A
(43) Publication Date : 19/12/2014

(54) Title of the invention : DEVICE AND METHOD FOR INSTALLING A COMPACT PIPE WITHIN A PIPELINE

(51) International classification :F16L55/165
(31) Priority Document No :1039503
(32) Priority Date :29/03/2012
(33) Name of priority country :Netherlands
(86) International Application No :PCT/EP2013/056063
Filing Date :22/03/2013
(87) International Publication No :WO 2013/144010
(61) Patent of Addition to Application Number :NA
Filing Date :NA
(62) Divisional to Application Number :NA
Filing Date :NA

(71)**Name of Applicant :**
1)WAVIN B.V.
Address of Applicant :Stationsplein 3, NL-8011 CW Zwolle **Netherlands**
(72)**Name of Inventor :**
1)ELZINK,Willem Johan

(57) Abstract :
A device for installing a compact pipe (CP) within a pipeline includes an adapter (4) comprising means for releasably connecting a connecting piece to the adapter (4), and means for fixing the adapter (4) to a first end of the compact pipe (CP).

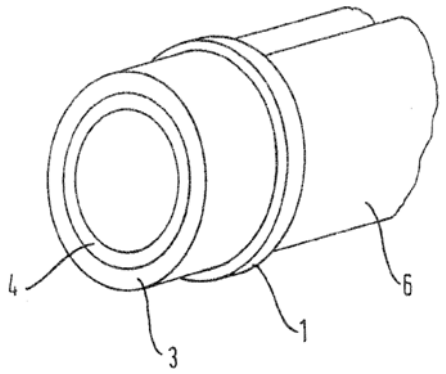

No. of Pages : 27 No. of Claims : 23

(12) PATENT APPLICATION PUBLICATION
(19) INDIA
(22) Date of filing of Application :24/09/2014

(21) Application No.2034/KOLNP/2014 A
(43) Publication Date : 19/12/2014

(54) Title of the invention : COOLING PROCESS CONTROL

(51) International classification :C21D 11/00
(31) Priority Document No :12161804.5
(32) Priority Date :28/03/2012
(33) Name of priority country :EUROPEAN UNION
(86) International Application No :PCT/EP2013/055753
Filing Date :20/03/2013
(87) International Publication No :WO 2013/143925
(61) Patent of Addition to Application Number :NA
Filing Date :NA
(62) Divisional to Application Number :NA
Filing Date :NA

(71)**Name of Applicant :**
1)SIEMENS AKTIENGESELLSCHAFT
Address of Applicant :WITTELSBACHERPLATZ 2, 80333 MÜNCHEN. **Germany**
(72)**Name of Inventor :**
1)KLAUS WEINZIERL

(57) Abstract :
The invention relates to a method for controlling a cooling process of a material (4) using a coolant. A supply (13) of the coolant to the material (4) is controlled by at least one actuator (6) which can be set to two or more different positions (k). An actuator characteristic curve set (11k) is assigned to the actuator (6), said characteristic curve set specifying a relationship between a coolant stream (w), a pressure (p) of the coolant, and a position (k) of the actuator (6), and a coolant stream (Wi) is set, wherein the pressure (pi) of the coolant upstream of the at least one actuator (6), when seen in the flow direction of the coolant, is ascertained; the position (ki) corresponding to the ascertained pressure value (pi) and to a target coolant stream is ascertained from the actuator characteristic curve set (11k); and the actuator (6) is set to the ascertained position (ki).

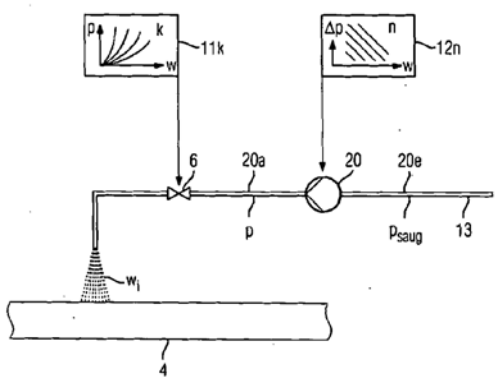

No. of Pages : 42 No. of Claims : 14

(12) PATENT APPLICATION PUBLICATION
(19) INDIA
(22) Date of filing of Application :24/09/2014
(21) Application No.2035/KOLNP/2014 A
(43) Publication Date : 19/12/2014

(54) Title of the invention : PRESSURE STABILIZATION METHOD.

(51) International classification :C21D 11/00
(31) Priority Document No :12161385.5
(32) Priority Date :27/03/2012
(33) Name of priority country :EUROPEAN UNION
(86) International Application No :PCT/EP2013/055547
Filing Date :18/03/2013
(87) International Publication No :WO 2013/143902
(61) Patent of Addition to Application Number :NA
Filing Date :NA
(62) Divisional to Application Number :NA
Filing Date :NA

(71)**Name of Applicant :**
1)SIEMENS AKTIENGESELLSCHAFT
Address of Applicant :WITTELSBACHERPLATZ 2, 80333 MÜNCHEN, **Germany**
(72)**Name of Inventor :**
1)WEINZIERL, KLAUS

(57) Abstract :
The invention relates to a method for stabilizing the pressure of the water supply of a cooling section (1) of a metal processing line. The cooling section (1) is supplied with water from a water reservoir (3) by a pipeline (2) which is filled with water. A pressure container (4) is provided which is partly filled with air (4a) and partly with water (4w). Furthermore, a direct connection (5) is provided for a direct exchange of water between the pressure container (4) and the pipeline (2). Water is pressed out of the pressure container (4) directly into the pipeline (2) through the provided connection (5) in the event that the water pressure in the pipeline (2) drops.

No. of Pages : 28 No. of Claims : 15

(12) PATENT APPLICATION PUBLICATION
(19) INDIA
(22) Date of filing of Application :24/09/2014

(21) Application No.2036/KOLNP/2014 A
(43) Publication Date : 19/12/2014

(54) Title of the invention : APPARATUS AND METHOD FOR IMPROVING THE PERCEIVED QUALITY OF SOUND REPRODUCTION BY COMBINING ACTIVE NOISE CANCELLATION AND PERCEPTUAL NOISE COMPENSATION

(51) International classification :G10K11/178
(31) Priority Document No :61/615,446
(32) Priority Date :26/03/2012
(33) Name of priority country :U.S.A.
(86) International Application No :PCT/EP2013/056314
Filing Date :25/03/2013
(87) International Publication No :WO 2013/144099
(61) Patent of Addition to Application Number :NA
Filing Date :NA
(62) Divisional to Application Number :NA
Filing Date :NA

(71)**Name of Applicant :**
1)FRAUNHOFER-GESELLSCHAFT ZUR FÖRDERUNG DER ANGEWANDTEN FORSCHUNG E.V.
Address of Applicant :Hansastrasse 27c, 80686 München,**Germany**
(72)**Name of Inventor :**
1)UHLE,Christian
2)HERRE,Jürgen
3)WALTHER,Andreas
4)FLEISCHMANN,Felix
5)GAMPP,Patrick

(57) Abstract :
An apparatus for improving a perceived quality of sound reproduction of an audio output signal is provided. The apparatus comprises an active noise cancellation unit (110) for generating a noise cancellation signal based on an environmental audio signal, wherein the environmental audio signal comprises noise signal portions, the noise signal portions resulting from recording environmental noise. Moreover, the apparatus comprises a residual noise characteristics estimator (120) for determining a residual noise characteristic depending on the environmental noise and the noise cancellation signal. Furthermore, the apparatus comprises a perceptual noise compensation unit (130) for generating a noise- compensated signal based on an audio target signal and based on the residual noise characteristic. Moreover, the apparatus comprises a combiner (140) for combining the noise cancellation signal and the noise-compensated signal to obtain the audio output signal.

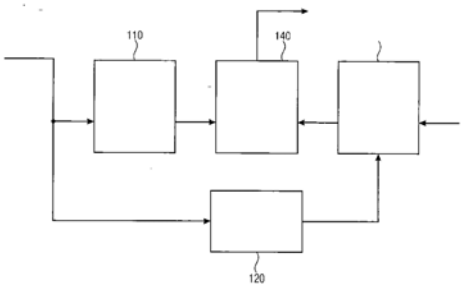

No. of Pages : 55 No. of Claims : 15

(12) PATENT APPLICATION PUBLICATION
(19) INDIA
(22) Date of filing of Application :17/06/2013
(21) Application No.722/KOL/2013 A
(43) Publication Date : 19/12/2014

(54) Title of the invention : SYSTEM AND METHOD FOR PROVIDING IMPROVED SYSTEM PERFORMANCE BY MOVING PINNED DATA TO OPEN NAND FLASH INTERFACE WORKING GROUP MODULES WHILE THE SYSTEM IS IN A RUNNING STATE

(51) International classification	:G06Q 10/00
(31) Priority Document No	:NA
(32) Priority Date	:NA
(33) Name of priority country	:NA
(86) International Application No	:NA
Filing Date	:NA
(87) International Publication No	: NA
(61) Patent of Addition to Application Number	:NA
Filing Date	:NA
(62) Divisional to Application Number	:NA
Filing Date	:NA

(71)**Name of Applicant :**
1)LSI CORPORATION
Address of Applicant :1320 RIDDER PARK DRIVE, SAN JOSE, CALIFORNIA 95131 U.S.A.
(72)**Name of Inventor :**
1)LOKARE HARSHAVARDHAN S.
2)YATHAGIRI NAVEEN A.
3)PARTHASARATHY ABHILASH N.
4)BORAIAH SAMPATH K.

(57) Abstract :
Aspects of the disclosure pertain to a system and method for providing improved system performance by moving pinned data to ONFI module(s) while the system is in a running state. Further, when a virtual array of the system is offline, the system allows for scheduling and performance of background operations on virtual arrays which are still online. These characteristics promote the ability of the online virtual arrays to operate efficiently in the presence of the pinned data.

No. of Pages : 17 No. of Claims : 20

(12) PATENT APPLICATION PUBLICATION
(19) INDIA
(21) Application No.2017/KOLNP/2014 A
(22) Date of filing of Application :19/09/2014
(43) Publication Date : 19/12/2014

(54) Title of the invention : METHOD, DEVICE AND SECURE ELEMENT FOR CONDUCTING A SECURED FINANCIAL TRANSACTION ON A DEVICE

(51) International classification	:G06Q20/40,G06Q20/16,G06Q20/32	(71)**Name of Applicant :** **1)MOBEEWAVE,INC.** Address of Applicant :2455 Rue Saint-Charles, Montreal,H3K 1E6 QC **CANADA**
(31) Priority Document No	:61/604,613	
(32) Priority Date	:29/02/2012	
(33) Name of priority country	:U.S.A.	(72)**Name of Inventor :** **1)FONTAINE,Sebastien** **2)DOLCINO,Luc** **3)DU HAYS,Benjamin** **4)DE NANCLAS,Maxime** **5)ALBERTI,Xavier**
(86) International Application No	:PCT/CA2013/000185	
Filing Date	:28/02/2013	
(87) International Publication No	:WO 2013/126996	
(61) Patent of Addition to Application Number	:NA	
Filing Date	:NA	
(62) Divisional to Application Number	:NA	
Filing Date	:NA	

(57) Abstract :
A device and a secure element for conducting a secured financial transaction are disclosed. The device comprises a central processing unit; a communication interface for establishing a communication between the device and a financial institution related to a financial account; an interface for acquiring data relating to the financial account; the secure element for processing at least a portion of the data relating to the financial account acquired by the interface; and control logic for acquiring a purchase amount to be debited from the financial account and for obtaining a transaction authorization from the financial institution related to the financial account, the transaction authorization being based, at least partially, on data processed solely by the secure element independently of data processed by the central processing unit. A method of conducting the secured financial transaction, and a computer program product for execution by the secure element are also disclosed.

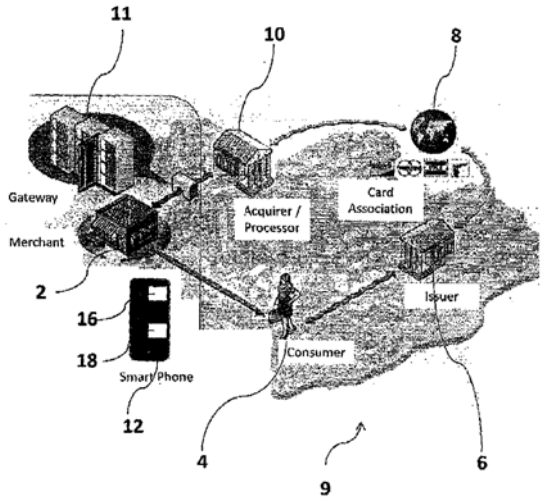

No. of Pages : 61 No. of Claims : 59

(12) PATENT APPLICATION PUBLICATION
(19) INDIA
(22) Date of filing of Application :19/09/2014
(21) Application No.2018/KOLNP/2014 A
(43) Publication Date : 19/12/2014

(54) Title of the invention : TRIALKYL CATIONIC LIPIDS AND METHODS OF USE THEREOF

(51) International classification	:C07C271/20,C07C217/08,C07C229/12
(31) Priority Document No	:61/602,990
(32) Priority Date	:24/02/2012
(33) Name of priority country	:U.S.A.
(86) International Application No Filing Date	:PCT/US2013/027469 :22/02/2013
(87) International Publication No	:WO 2013/126803
(61) Patent of Addition to Application Number Filing Date	:NA :NA
(62) Divisional to Application Number Filing Date	:NA :NA

(71)**Name of Applicant :**
1)PROTIVA BIOTHERAPEUTICS INC.
Address of Applicant :100-8900 Glenlyon Parkway, Burnaby,British Columbia V5J 5J8 **CANADA**
(72)**Name of Inventor :**
1)HEYES,James
2)WOOD,Mark
3)MARTIN,Alan

(57) Abstract :
The present invention provides compositions and methods for the delivery of therapeutic agents to cells. In particular, these include novel, trialkyl, cationic lipids and nucleic acid-lipid particles that provide efficient encapsulation of nucleic acids and efficient delivery of the encapsulated nucleic acid to cells in vivo. The compositions of the present invention are highly potent, thereby allowing effective knock-down of a specific target protein at relatively low doses.

No. of Pages : 164 No. of Claims : 39

(12) PATENT APPLICATION PUBLICATION
(19) INDIA
(22) Date of filing of Application :14/06/2013
(21) Application No.713/KOL/2013 A
(43) Publication Date : 19/12/2014

(54) Title of the invention : WEED CONTROL

(51) International classification	:A01N33/22, A01N33/00
(31) Priority Document No	:NA
(32) Priority Date	:NA
(33) Name of priority country	:NA
(86) International Application No	:NA
Filing Date	:NA
(87) International Publication No	: NA
(61) Patent of Addition to Application Number	:NA
Filing Date	:NA
(62) Divisional to Application Number	:NA
Filing Date	:NA

(71)**Name of Applicant :**
1)UNITED PHOSPHORUS LIMITED
Address of Applicant :AGROCHEMICAL PLANT,DURGACHAK HALDIA- 721 602, MIDNAPORE DIST. WEST BENGAL, INDIA
(72)**Name of Inventor :**
1)SHROFF, JAIDEV RAJNIKANT
2)SHROFF, VIKRAM RAJNIKANT
3)DUBEY, BHUPENDRAKUMAR VISHNUPRASAD

(57) Abstract :
The present invention provides a composition comprising pyrazosulfuron ethyl for the control of winter weeds in winter crops that are not rice.

No. of Pages : 20 No. of Claims : 14

(12) PATENT APPLICATION PUBLICATION
(19) INDIA
(22) Date of filing of Application :23/09/2014
(21) Application No.2028/KOLNP/2014 A
(43) Publication Date : 19/12/2014

(54) Title of the invention : AUTOMOTIVE SELECTIVE CATALYTIC REDUCTION (SCR) SYSTEM SENSOR HOLDER AND ASSEMBLY

(51) International classification :F01N3/10,F01N9/00,F01N3/28
(31) Priority Document No :61/604,379
(32) Priority Date :28/02/2012
(33) Name of priority country :U.S.A.
(86) International Application No :PCT/US2013/028326
Filing Date :28/02/2013
(87) International Publication No :WO 2013/130810
(61) Patent of Addition to Application Number :NA
Filing Date :NA
(62) Divisional to Application Number :NA
Filing Date :NA

(71)**Name of Applicant :**
1)NORMA U.S. HOLDING LLC
Address of Applicant :2430 E. Walton Boulevard, Auburn Hills,MI 48326,U.S.A.
(72)**Name of Inventor :**
1)RISTOVSKI,Borce
2)BURGHART,David,Robert

(57) Abstract :
An automotive selective catalytic reduction (SCR) system assembly includes a holder for receiving an SCR system sensor. The holder has a tube, a chamber and a retainer. The tube receives incoming fluid from a first SCR line and leads exiting fluid to a second SCR line. A passage is located in the tube. The chamber has a interior for receiving the SCR system sensor, and has an opening. The retainer has a portion moveable in and out of the chambers opening for holding and releasing the SCR system sensor in the chambers interior.

No. of Pages : 18 No. of Claims : 19

(12) PATENT APPLICATION PUBLICATION
(19) INDIA
(22) Date of filing of Application :25/10/2012
(21) Application No.3236/KOLNP/2012 A
(43) Publication Date : 19/12/2014

(54) Title of the invention : GAS-BLAST CIRCUIT-BREAKER

(51) International classification :H01H33/91
(31) Priority Document No :10 2010 020 979.1
(32) Priority Date :12/05/2010
(33) Name of priority country :Germany
(86) International Application No :PCT/EP2011/057010
Filing Date :03/05/2011
(87) International Publication No :WO 2011/141321
(61) Patent of Addition to Application Number :NA
Filing Date :NA
(62) Divisional to Application Number :NA
Filing Date :NA

(71)**Name of Applicant :**
1)SIEMENS AKTIENGESELLSCHAFT
Address of Applicant :Wittelsbacherplatz 2, 80333 München **Germany**
(72)**Name of Inventor :**
1)CERNAT Radu-Marian

(57) Abstract :
The invention relates to a circuit breaker comprising a first contact (4) and a second contact (5). An electric arc zone is disposed between the contacts (4,5). A feed channel (13) opens into the electric arc zone, connecting the electric arc zone to a hot gas reservoir volume (14). The hot gas reservoir volume (14), in turn is connected to a compression volume (18). An outflow opening (20a,20b,20c,20d,20e,20f,20g,20h) is disposed in a wall (8) of the compression volume (18). The outflow opening (20a,20b,20c,20d,20e,20f,20g,20h) is permanently open at least in the contacting state of the contacts (4,5).

No. of Pages : 34 No. of Claims : 7

(12) PATENT APPLICATION PUBLICATION
(19) INDIA
(22) Date of filing of Application :15/09/2014

(21) Application No.1959/KOLNP/2014 A
(43) Publication Date : 19/12/2014

(54) Title of the invention : RECONFIGURABLE STENT-GRAFT DELIVERY SYSTEM

(51) International classification :A61F2/966
(31) Priority Document No :13/457,537
(32) Priority Date :27/04/2012
(33) Name of priority country :U.S.A.
(86) International Application No :PCT/US2013/026736
Filing Date :19/02/2013
(87) International Publication No :WO 2013/162687
(61) Patent of Addition to Application Number :NA
Filing Date :NA
(62) Divisional to Application Number :NA
Filing Date :NA

(71)**Name of Applicant :**
1)MEDTRONIC VASCULAR INC.
Address of Applicant :C/o IP Legal Department, Medtronic Vascular Inc., 3576 Unocal Place, Santa Rosa, CA 95403 U.S.A.
(72)**Name of Inventor :**
1)ARGENTINE, Jeffery
2)HAGGARD, Matthew
3)MAGGARD, Jason
4)SIMMONS, Emilie

(57) Abstract :
A reconfigurable delivery system is disclosed having a multi-lumen delivery catheter configuration that permits the delivery and staged release of a self-expanding main vessel stent-graft and a delivery sheath configuration that permits the introduction of various medical devices for the delivery and implantation of various branch vessel stent-grafts that are to be mated with the main vessel stent-graft. A method is disclosed wherein the delivery system is first used in the multi-lumen delivery catheter configuration to deliver and release a main vessel stent-graft that is configured for placement in the abdominal aorta for treatment of short-neck infrarenal, juxtarenal, and/or suprarenal aneurysms and then used in the delivery sheath configuration to facilitate the delivery of branch vessel stent-grafts that are configured to extend from the main vessel stent-graft into a respective renal artery.

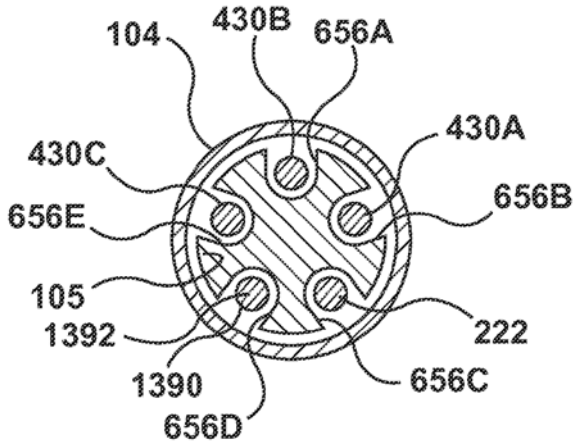

No. of Pages : 58 No. of Claims : 19

(12) PATENT APPLICATION PUBLICATION
(19) INDIA
(22) Date of filing of Application :09/09/2014

(21) Application No.1919/KOLNP/2014 A
(43) Publication Date : 19/12/2014

(54) Title of the invention : FOUNDATION STRUCTURE AND STRUCTURE MANUFACTURING METHOD

(51) International classification :E02D27/42,E04H12/22
(31) Priority Document No :10-2012-0013636
(32) Priority Date :10/02/2012
(33) Name of priority country :Republic of Korea
(86) International Application No :PCT/KR2013/000930
Filing Date :06/02/2013
(87) International Publication No :WO 2013/119027
(61) Patent of Addition to Application Number :NA
Filing Date :NA
(62) Divisional to Application Number :NA
Filing Date :NA

(71)**Name of Applicant :**
1)PACIFIC TECHNOLOGY CO., LTD.
Address of Applicant :60-11, Palgog 2-dong, Sangrok-gu, Ansan-si, Gyeonggi-do 426-190 **Republic of Korea**
2)SHIN, Seong Chul
(72)**Name of Inventor :**
1)SHIN, Seong Chul
2)KIM, JOON KYU
3)HAN, SANG JIN
4)HAN, MYOUNG HEE

(57) Abstract :
The present invention relates to a foundation structure for supporting a street lamp pole, which is manufactured using discarded cathode ray tubes, and includes a body on an upper portion thereof to which the street lamp pole is coupled, wherein the body is manufactured through a process of crushing and melting the cathode ray tubes, removing impurities, and forming the body. Thus, according to the embodiments of the present invention, the structure is manufactured using discarded cathode ray tubes in order to efficiently recycle discarded cathode ray tubes. Accordingly, environmental pollution from discarded cathode ray tubes can be prevented.

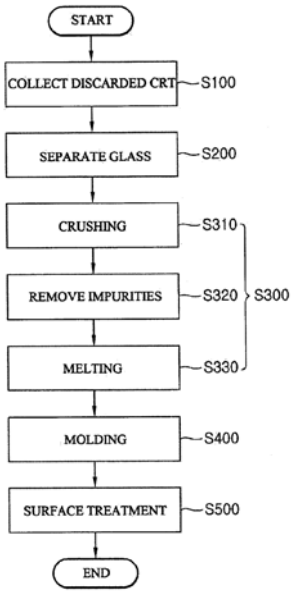

No. of Pages : 18 No. of Claims : 8

(12) PATENT APPLICATION PUBLICATION
(19) INDIA
(22) Date of filing of Application :22/09/2014

(21) Application No.2022/KOLNP/2014 A
(43) Publication Date : 19/12/2014

(54) Title of the invention : A MOBILE TERMINAL HAVING A SCREEN OPERATION AND OPERATING METHOD

(51) International classification :H04B1/40,G06F3/048,G06F3/041
(31) Priority Document No :10-2012-0019352
(32) Priority Date :24/02/2012
(33) Name of priority country :Republic of Korea
(86) International Application No :PCT/KR2013/001460
Filing Date :22/02/2013
(87) International Publication No :WO 2013/125911
(61) Patent of Addition to Application Number :NA
Filing Date :NA
(62) Divisional to Application Number :NA
Filing Date :NA

(71)**Name of Applicant :**
1)SAMSUNG ELECTRONICS CO., LTD.
Address of Applicant :129, Samsung-ro, Yeongtong-gu, Suwon-si,Gyeonggi-do, 443-742 **Republic of Korea**
(72)**Name of Inventor :**
1)Min Wook NA
2)Jong Woo SHIN
3)Kang Sik CHOI
4) Min Soo KWON
5)Jee Yeun WANG

(57) Abstract :
A mobile terminal and screen operation method for the same are disclosed. The screen operation method includes: displaying a screen containing an amorphous object that is changeable at least in part to a specific form according to an input event; receiving a generated input event; and displaying a concrete object that is generated from the amorphous object by modifying the amorphous object at least in part according to the input event.

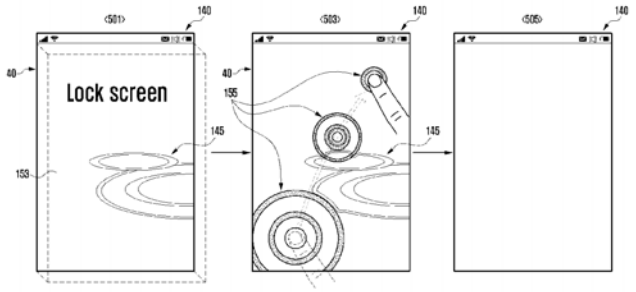

No. of Pages : 46 No. of Claims : 31

(12) PATENT APPLICATION PUBLICATION
(19) INDIA
(22) Date of filing of Application :18/09/2014

(21) Application No.2023/KOLNP/2014 A
(43) Publication Date : 19/12/2014

(54) Title of the invention : ZERO WASTE DOSING METHOD AND APPARATUS FOR FILLING CONTAINERS OF LIQUIDS

(51) International classification :B67C3/20,F04B43/12
(31) Priority Document No :MI2012A000281
(32) Priority Date :24/02/2012
(33) Name of priority country :Italy
(86) International Application No :PCT/IB2013/000275
Filing Date :25/02/2013
(87) International Publication No :WO 2013/124728
(61) Patent of Addition to Application Number :NA
Filing Date :NA
(62) Divisional to Application Number :NA
Filing Date :NA

(71)**Name of Applicant :**
1)I.M.A. INDUSTRIA MACCHINE AUTOMATICHE S.P.A.
Address of Applicant :Via Emilia, 428/442, I-40064 Ozzano Dell'Emilia (IT) Italy
(72)**Name of Inventor :**
1)TREBBI, Claudio
2)RAGAZZINI, Ivan

(57) Abstract :
Zero waste dosing method for filling containers (22) of liquids which provides to use at a delivery station (19) of the liquid product at least a volumetric pump (12) with a rotor and stator associated with a tank (1 1) of the liquid to be introduced into said containers (22).

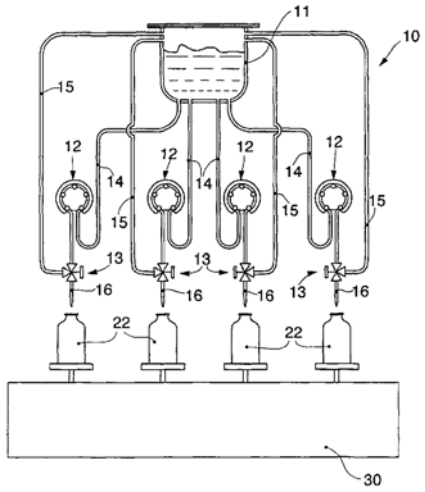

No. of Pages : 21 No. of Claims : 14

(12) PATENT APPLICATION PUBLICATION
(19) INDIA
(22) Date of filing of Application :09/06/2014
(21) Application No.628/KOL/2014 A
(43) Publication Date : 19/12/2014

(54) Title of the invention : VEHICLE FRONT STRUCTURE

(51) International classification	:B62D 25/00
(31) Priority Document No	:2013-123538
(32) Priority Date	:12/06/2013
(33) Name of priority country	:Japan
(86) International Application No	:NA
Filing Date	:NA
(87) International Publication No	: NA
(61) Patent of Addition to Application Number	:NA
Filing Date	:NA
(62) Divisional to Application Number	:NA
Filing Date	:NA

(71)**Name of Applicant :**
1)SUZUKI MOTOR CORPORATION
Address of Applicant :300,TAKATSUKA-CHO, MINAMI-KU,HAMAMATSU, SHIZUOKA,432-8611 JAPAN
(72)**Name of Inventor :**
1)MOCHIZUKI SHINEI

(57) Abstract :
It is an object to provide a vehicle front structure with which the rigidity around a side member within an engine room of a vehicle can be increased, and deformation and vibration of the side member can be suppressed, without any additional members. A vehicle front structure 100 comprises a side member 106 extending in the vehicle front-back direction, a strut tower 110 that stands outside of the side member in the vehicle-width direction, has a side face 116 joined to the side member, a top face 118, and a front face 120, and suspends a suspension from the top face, and a cowl side member 112 that passes through the outside of the strut tower in the vehicle-width direction and is fixed to an upper part of the front face of the strut tower. The strut tower has an extended portion 130 that is extended frontward from an end portion of the front face on the outer side in the vehicle-width direction and includes a recess portion 132 that is recessed toward the outside in the vehicle-width direction between the cowl side member and the side member. Furthermore,the vehicle front structure further comprises an extension panel 114 that is fixed to the front face of the strut tower,covers the recess portion of the extended portion from the inside of the vehicle, and is joined to the side member.

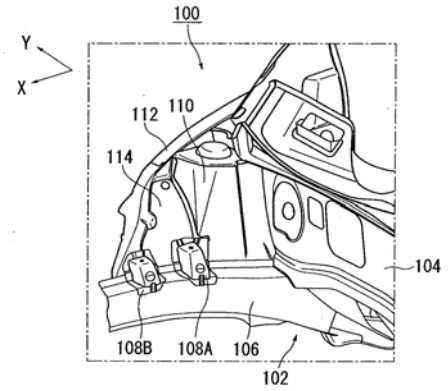

No. of Pages : 27 No. of Claims : 6

(12) PATENT APPLICATION PUBLICATION
(19) INDIA
(22) Date of filing of Application :17/09/2014

(21) Application No.1999/KOLNP/2014 A
(43) Publication Date : 19/12/2014

(54) Title of the invention : STENT-GRAFT PROSTHESIS FOR PLACEMENT IN THE ABDOMINAL AORTA

(51) International classification :A61F2/07
(31) Priority Document No :13/458,209
(32) Priority Date :27/04/2012
(33) Name of priority country :U.S.A.
(86) International Application No :PCT/US2013/026677
Filing Date :19/02/2013
(87) International Publication No :WO 2013/162682
(61) Patent of Addition to Application Number :NA
Filing Date :NA
(62) Divisional to Application Number :NA
Filing Date :NA

(71)**Name of Applicant :**
1)MEDTRONIC VASCULAR INC.
Address of Applicant :c/o IP Legal Department, Medtronic Vascular Inc., 3576 Unocal Place, Santa Rosa, California 95403 U.S.A.
(72)**Name of Inventor :**
1)COGHLAN, Kieran
2)SIMMONS, Emilie
3)PEARSON, Meghan

(57) Abstract :
A self-expanding main vessel stent-graft (200) includes a trunk portion (204) configured for placement within the abdominal aorta and a bifurcated portion (220) configured for placement above the aortic bifurcation of the common iliac arteries. The trunk portion includes a proximal end section (210) having an anchor stent (222) and a seal stent (226) that accommodates a scallop or open-top fenestration (224); a suprarenal body section having at least one stent (228) of variable stiffness to accommodate branch vessel prosthesis deployed alongside the main vessel stent-graft; a branch connection section (214) having opposing couplings for connecting the main vessel stent- graft to branch vessel prostheses deployed within the renal arteries; an infrarenal body section (216) having at least one stent (230) of uniform stiffness; and a transition section (218) for transitioning into the bifurcated portion.

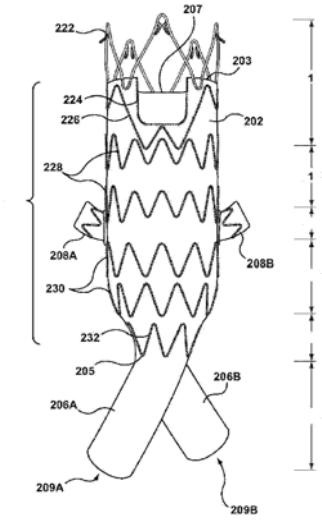

No. of Pages : 54 No. of Claims : 16

(12) PATENT APPLICATION PUBLICATION
(19) INDIA
(22) Date of filing of Application :02/09/2014

(21) Application No.1881/KOLNP/2014 A
(43) Publication Date : 19/12/2014

(54) Title of the invention : A DEVICE AND A METHOD FOR EJECTING A FLUID

(51) International classification :B05B3/06,B08B9/093
(31) Priority Document No :12159169.7
(32) Priority Date :13/03/2012
(33) Name of priority country :EPO
(86) International Application No :PCT/EP2013/054694
Filing Date :08/03/2013
(87) International Publication No :WO 2013/135570
(61) Patent of Addition to Application Number :NA
Filing Date :NA
(62) Divisional to Application Number :NA
Filing Date :NA

(71)**Name of Applicant :**
1)ALFA LAVAL CORPORATE AB
Address of Applicant :P.O. Box 73, SE-22100 Lund, **Sweden**
(72)**Name of Inventor :**
1)JENSEN, Bo Boye Busk

(57) Abstract :
A device (100) and a method using said device (100) for ejecting a fluid (L) are provided. The device (100) comprises a main pipe (60), a rotatable housing (107) connected to the main pipe (60) and a hub (110) provided with a nozzle (112). The hub (110) is rotatably connected to the housing (107). The fluid is arranged to be conveyed through the main pipe and the housing (107) to said nozzle (112) for ejection of the fluid (L), and the hub (110) is arranged to rotate about an axis (A3) arranged with an angle a in relation to a longitudinal axis (A1) of the main pipe (60). The angle α between the longitudinal axis (A1) of the main pipe (60) and the rotational axis (A3) of the hub (110) is arranged to vary between 90-β and 90+β, 2 ≤ f3 ≤ 45, when the housing (107) rotates one revolution.

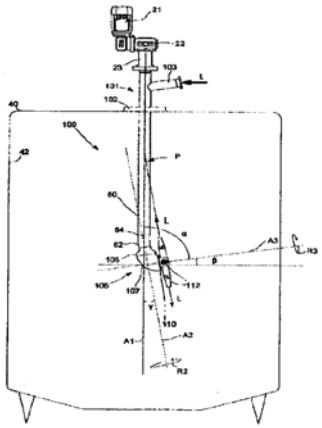

No. of Pages : 20 No. of Claims : 10

(12) PATENT APPLICATION PUBLICATION
(19) INDIA
(22) Date of filing of Application :02/09/2014
(21) Application No.1882/KOLNP/2014 A
(43) Publication Date : 19/12/2014

(54) Title of the invention : THERAPEUTIC CUSHION SYSTEMS AND METHODS

(51) International classification	:A61G7/07, A47C 20/00
(31) Priority Document No	:61/594,840
(32) Priority Date	:03/02/2012
(33) Name of priority country	:U.S.A.
(86) International Application No	:PCT/US2013/024378
Filing Date	:01/02/2013
(87) International Publication No	:WO 2013/116676
(61) Patent of Addition to Application Number	:NA
Filing Date	:NA
(62) Divisional to Application Number	:NA
Filing Date	:NA

(71)**Name of Applicant :**
1)AMENITY HEALTH, INC.
Address of Applicant :9606 Kearny Villa Rd., San Diego, California 92126 U.S.A.
(72)**Name of Inventor :**
1)MELCHER, Carl
2)CLARK, Aaron
3)ERICKSON, Clint

(57) Abstract :
Apparatus and methods for providing therapeutic treatment for symptoms associated with GERD and/or other digestive disorders and/or other medical conditions are described herein. In some embodiments, an apparatus includes a support element that has a first end portion and a second end portion and a top surface disposed at an angle relative to a bottom surface of the support element. The second end portion has a height greater than the first end portion. A riser element is configured to be coupled proximate to the second end portion of the support element. A body element is configured to be disposed on at least one of the support element or the riser element. The body element has a first arm and a second arm connected together by an arc portion.

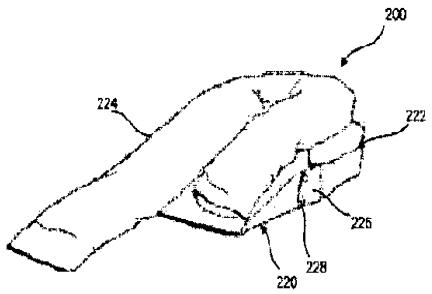

No. of Pages : 104 No. of Claims : 40

(12) PATENT APPLICATION PUBLICATION
(19) INDIA
(22) Date of filing of Application :14/11/2012
(21) Application No.3507/KOLNP/2012 A
(43) Publication Date : 19/12/2014

(54) Title of the invention : PRINTING PLATE UNIT, PRINTING PLATE ATTACHMENT DEVICE AND PRINTER

(51) International classification :B41F27/12
(31) Priority Document No :NA
(32) Priority Date :NA
(33) Name of priority country :NA
(86) International Application No :PCT/JP2012/062270
Filing Date :14/05/2012
(87) International Publication No : WO/2013/171818
(61) Patent of Addition to Application Number :NA
Filing Date :NA
(62) Divisional to Application Number :NA
Filing Date :NA

(71)**Name of Applicant :**
1)IZUME MASAYUKI
Address of Applicant :108 YAMASHIROYASHIKI-CHO, MISU, YOKOOJI, FUSHIMI-KU, KYOTO-SHI, KYOTO 6128207. Japan
(72)**Name of Inventor :**
1)IZUME MASAYUKI

(57) Abstract :
To attach a printing plate to a printer readily and accurately, and avoid necessity of a large space for the storage of the printing plate. A printing plate unit 1 includes a printing plate 3 in which a plate section 9 is provided on a part of a front surface of a sheet 8 made of an elastic material and engaging protrusions 10 that protrude toward a back surface and extend in a width direction are provided at both longitudinal ends, and a printing plate coupling member 4 that is detachable from the printing plate 3 and couples both the engaging protrusions 10 of the cylindrical printing plate 3 to each other to keep the cylindrical shape of the printing plate 3.

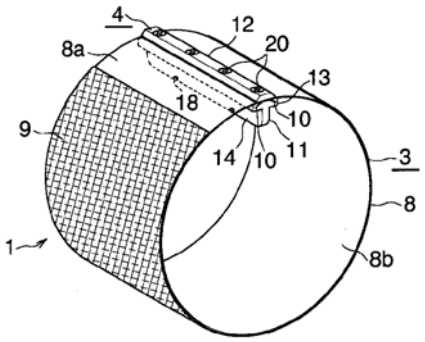

No. of Pages : 77 No. of Claims : 16

(12) PATENT APPLICATION PUBLICATION
(19) INDIA
(22) Date of filing of Application :16/09/2014

(21) Application No.1985/KOLNP/2014 A
(43) Publication Date : 19/12/2014

(54) Title of the invention : PLATE HEAT EXCHANGER

(51) International classification :F28D9/00,F28F3/04
(31) Priority Document No :12163320.0
(32) Priority Date :05/04/2012
(33) Name of priority country :EPO
(86) International Application No :PCT/EP2013/056990
Filing Date :03/04/2013
(87) International Publication No :WO 2013/150054
(61) Patent of Addition to Application Number :NA
Filing Date :NA
(62) Divisional to Application Number :NA
Filing Date :NA

(71)**Name of Applicant :**
1)ALFA LAVAL CORPORATE AB
Address of Applicant :P. O. Box 73, S-22100 Lund, **Sweden**
(72)**Name of Inventor :**
1)BLOMGREN,Ralf
2)NOËL-BARON, Olivier

(57) Abstract :
A plate heat exchanger (2) comprising a first frame plate (4), a second frame plate (6) and a stack (24) of heat transfer plates (26) is provided. Each of the heat transfer plates has a center portion (56) and a peripheral portion (58) encircling the center portion. The heat transfer plates are arranged in pairs between the first and the second frame plate, a first flow path (F1) for a first fluid being formed between the heat transfer plates of the pairs and a second flow path (F2) for a second fluid being formed between the pairs of heat transfer plates. One of the first and second flow paths is a free-flow path along which the center portions of the heat transfer plates are completely separated from each other. The plate heat exchanger is characterized in further comprising a reinforcement plate (28a) which is thicker than the heat transfer plates and has a center portion (100) encircled by a peripheral portion (102). The reinforcement plate is arranged between the first frame plate and the stack of heat transfer plates. A first number of permanent reinforcement joints (106) each bond together the reinforcement plate and an outermost heat transfer plate (26a).

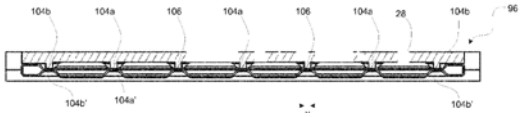

No. of Pages : 35 No. of Claims : 17

(12) PATENT APPLICATION PUBLICATION
(19) INDIA
(22) Date of filing of Application :28/05/2012
(21) Application No.1286/KOLNP/2012 A
(43) Publication Date : 19/12/2014

(54) Title of the invention : Z-TYPE STEEL SHEET PILE

(51) International classification :E02D5/04
(31) Priority Document No :2009-281362
(32) Priority Date :11/12/2009
(33) Name of priority country :Japan
(86) International Application No :PCT/JP2010/072598
Filing Date :09/12/2010
(87) International Publication No :WO 2011/071186
(61) Patent of Addition to Application Number :NA
Filing Date :NA
(62) Divisional to Application Number :NA
Filing Date :NA

(71)**Name of Applicant :**
1)JFE STEEL CORPORATION
Address of Applicant :2-3,UCHISAIWAI-CHO 2-CHOME, CHIYODA-KU, TOKYO 100-0011 JAPAN
(72)**Name of Inventor :**
1)SHUNSUKE USAMI
2)KENJI KOHNO
3)KUNIHIKO ONDA

(57) Abstract :
Provided is a Z-type steel sheet pile where all of economic efficiency, workability and soundness are optimized. The Z-type steel sheet pile according to the present invention includes: a web; flanges which are formed on both edges of the web; and joints which are formed on edge portions of the flanges, wherein the relationship among a geometrical moment of inertia per wall width of 1m I (cm4/m) , a weight per unit wall area W (kg/m2) , penetration resistance R and a web angle θ (°) when a steel sheet pile wall is formed is set so as to satisfy a following group of formulae (A) or a following group of formulae (B) . Group of formulae (A): (W/I)xR≤0.004, and 2.65x10-4xI+22≤θ≤2.80xl0-4xI+48 (30,000≤I<80,000) 2.65x10-4xI+22≤θ≤70 (80,00 0≤I<180,000) Group of formulae (B): 0.004<(W/I)xR≤0.006, and 2.80x10-4xI + 44.6<θ≤80 (30,000≤I<80,000) 67<θ≤80 (80,000≤I<200,000)

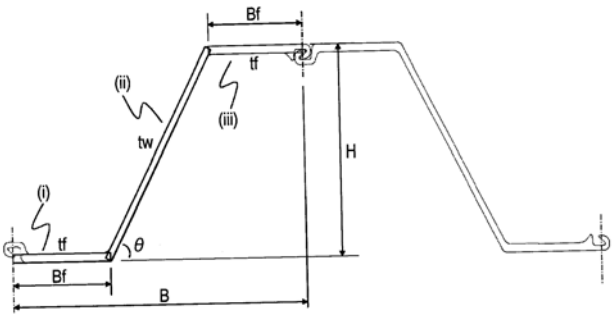

No. of Pages : 55 No. of Claims : 5

(12) PATENT APPLICATION PUBLICATION
(19) INDIA
(22) Date of filing of Application :17/09/2014

(21) Application No.2000/KOLNP/2014 A
(43) Publication Date : 19/12/2014

(54) Title of the invention : STENT-GRAFT PROSTHESIS FOR PLACEMENT IN THE ABDOMINAL AORTA

(51) International classification :A61F2/07
(31) Priority Document No :13/458,242
(32) Priority Date :27/04/2012
(33) Name of priority country :U.S.A.
(86) International Application No :PCT/US2013/026680
Filing Date :19/02/2013
(87) International Publication No :WO 2013/162683
(61) Patent of Addition to Application Number :NA
Filing Date :NA
(62) Divisional to Application Number :NA
Filing Date :NA

(71)**Name of Applicant :**
1)MEDTRONIC VASCULAR INC.
Address of Applicant :c/o IP Legal Department, Medtronic Vascular Inc., 3576 Unocal Place, Santa Rosa, California 95403 U.S.A.
(72)**Name of Inventor :**
1)COGHLAN, Keiran
2)SIMMONS, Emilie
3)PEARSON, Meghan

(57) Abstract :
A self-expanding main vessel stent-graft includes a trunk portion configured for placement within the abdominal aorta and a bifurcated portion configured for placement above the aortic bifurcation of the common iliac arteries. The trunk portion includes a proximal end section having an anchor stent and a seal stent that accommodates a scallop or open top fenestration; a suprarenal body section having at least one stent of variable stiffness to accommodate branch vessel prosthesis deployed alongside the main vessel stent-graft; a branch connection section having opposing couplings for connecting the main vessel stent-graft to branch vessel prostheses deployed within the renal arteries; an infrarenal body section having at least one stent of uniform stiffness; and a transition section for transitioning into the bifurcated portion. The main vessel stent-graft is configured to treat short-neck infrarenal, juxtarenal, and/or suprarenal aneurysms in a wide range of patient anatomies.

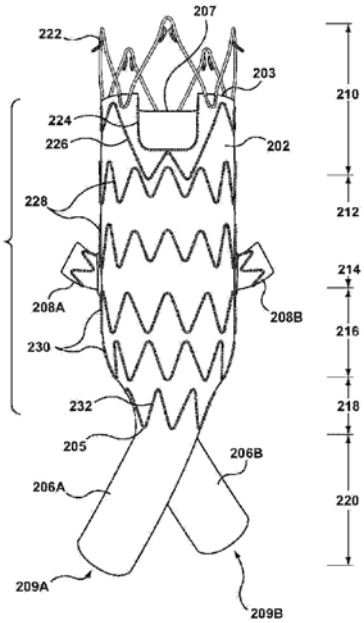

No. of Pages : 54 No. of Claims : 20

(12) PATENT APPLICATION PUBLICATION
(19) INDIA
(22) Date of filing of Application :17/09/2014
(21) Application No.2001/KOLNP/2014 A
(43) Publication Date : 19/12/2014

(54) Title of the invention : PHARMACEUTICAL COMPOSITION AND ADMINISTRATION THEREOF

(51) International classification :A61K31/47,A61K9/16,A61K47/02
(31) Priority Document No :61/603,882
(32) Priority Date :27/02/2012
(33) Name of priority country :U.S.A.
(86) International Application No :PCT/US2013/028097
Filing Date :27/02/2013
(87) International Publication No :WO 2013/130669
(61) Patent of Addition to Application Number :NA
Filing Date :NA
(62) Divisional to Application Number :NA
Filing Date :NA

(71)**Name of Applicant :**
1)VERTEX PHARMACEUTICALS INCORPORATED
Address of Applicant :50 Northern Avenue, Boston, MA 02210 U.S.A.
(72)**Name of Inventor :**
1)DOKOU, Eleni
2)JAMZAD, Shahla
3)CAESAR, John, P., Jr.
4)FAWAZ, Majed
5)DAS, Laura
6)GU, Chong-Hui
7)HURTER, Patricia, Nell
8)ISRANI, Meghna, Jai
9)JOHNSTON, Meghan, M.
10)KNEZIC, Dragutin
11)KUZMISSION, Andrew, G.
12)WANG, Hongren

(57) Abstract :
The present invention relates to pharmaceutical compositions containing a solid dispersion of N- [2,4-Bis(1,1 -dimethylethyl)-5-hydroxyphenyl]-1, 4-dihydro-4-oxoquinoline-3-carboxamide including formulations of the solid dispersions into powders, granules and mini-tablets, methods for manufacturing and processing the powders, granules and mini-tablets, and methods for treating cystic fibrosis employing the pharmaceutical composition.

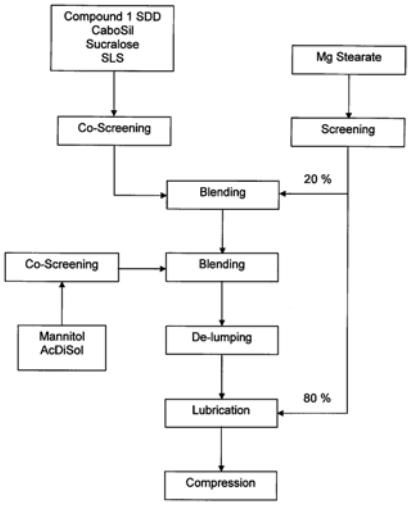

No. of Pages : 262 No. of Claims : 34

(12) PATENT APPLICATION PUBLICATION
(19) INDIA
(22) Date of filing of Application :12/06/2013
(21) Application No.704/KOL/2013 A
(43) Publication Date : 19/12/2014

(54) Title of the invention : AGROCHEMICAL FORMULATIONS

(51) International classification :A01N25/00
(31) Priority Document No :NA
(32) Priority Date :NA
(33) Name of priority country :NA
(86) International Application No :NA
Filing Date :NA
(87) International Publication No : NA
(61) Patent of Addition to Application Number :NA
Filing Date :NA
(62) Divisional to Application Number :NA
Filing Date :NA

(71)**Name of Applicant :**
1)UNITED PHOSPHORUS LIMITED
Address of Applicant :AGROCHEMICAL PLANT, DURGACHAK HALDIA-721 602, MIDNAPORE DIST. WEST BENGAL, INDIA
(72)**Name of Inventor :**
1)SHROFF, JAIDEV RAJNIKANT
2)SHROFF, VIKRAM RAJNIKANT
3)TALATI, PARESH, VITHALDAS

(57) Abstract :
A liquid herbicide composition is provided comprising at least an electrolytic agrochemical active; at least an alkyl N,N-dimethylamine N-oxide, and at least one (C9-C20) alkyl sulfosuccinic acid mono ester salt.

No. of Pages : 17 No. of Claims : 13

(12) PATENT APPLICATION PUBLICATION
(19) INDIA
(22) Date of filing of Application :14/06/2013

(21) Application No.710/KOL/2013 A
(43) Publication Date : 19/12/2014

(54) Title of the invention : A METHOD FOR FORECASTING INSTANT OF MEMBRANE CLEANING AND A SYSTEM THEREFOR

(51) International classification	:G06Q 10/00
(31) Priority Document No	:NA
(32) Priority Date	:NA
(33) Name of priority country	:NA
(86) International Application No	:NA
Filing Date	:NA
(87) International Publication No	: NA
(61) Patent of Addition to Application Number	:NA
Filing Date	:NA
(62) Divisional to Application Number	:NA
Filing Date	:NA

(71)**Name of Applicant :**
1)ABB AG
Address of Applicant :KALLSTADTER STR.1, 68309 MANNHEIM, **Germany**
(72)**Name of Inventor :**
1)MEKAPATI SRNIVAS
2)VINAY KARIWALA

(57) Abstract : The present invention is a method and a system for forecasting instant of membrane cleaning in a semi-permeable membrane system operating on Programmable Logic Controller (PLC). The system comprises a deviation computing unit, a deviation forecasting unit and a KPI computing unit. A semi-permeable membrane system is modeled based on mathematical model such as first principles based steady state model. The deviation of the output parameters of the membrane system between design values of output parameters of the membrane system model and measured values of the membrane system is computed by a deviation computing unit. These deviations of output parameters of the membrane system are forecasted by a deviation forecasting unit using time series forecasting technique such as Additive Holt Winters technique. A KPI computing unit computes Key Performance Indicator (KPI) to determine the instant at which the KPI crosses the threshold value, which in turn determines the instant at which membrane cleaning needs to be performed to improve efficiency of the semi-permeable membrane system.

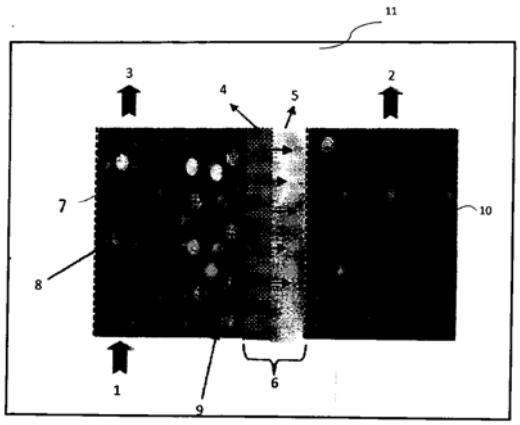

No. of Pages : 13 No. of Claims : 10

(12) PATENT APPLICATION PUBLICATION
(19) INDIA
(22) Date of filing of Application :05/01/2012

(21) Application No.31/KOLNP/2012 A
(43) Publication Date : 19/12/2014

(54) Title of the invention : FUSION PROTEINS

(51) International classification	:A61K31/00 C12P21/06
(31) Priority Document No	:NA
(32) Priority Date	:NA
(33) Name of priority country	:
(86) International Application No	:NA
Filing Date	:NA
(87) International Publication No	: NA
(61) Patent of Addition to Application Number	:
Filed on	:NA
(62) Divisional to Application Number	:NA
Filing Date	:NA

(71)**Name of Applicant :**
1)SYNTAXIN LIMITED
Address of Applicant :UNITS 4-10, THE QUADRANT, BARTON LANE, ABINGDON, OXON OX14 3YS U.K.
2)ALLERGAN, INC.
(72)**Name of Inventor :**
1)FOSTER, KEITH
2)CHADDOCK, JOHN
3)MARKS, PHILIP
4)STANCOMBE, PATRICK
5)AOKI, K., ROGER
6)FRANCIS, JOSEPH
7)STEWARD, LANCE

(57) Abstract :
A single chain, polypeptide fusion protein, comprising: a non-cytotoxic protease, or a fragment thereof, which protease or protease fragment is capable of cleaving a protein of the exocytic fusion apparatus of a nociceptive sensory afferent; a galanin Targeting Moiety that is capable of binding to a Binding Site on the nociceptive sensory afferent, which Binding Site is capable of undergoing endocytosis to be incorporated into an endosome within the nociceptive sensory afferent; a protease cleavage site at which site the fusion protein is cleavable by a protease, wherein the protease cleavage site is located between the non-cytotoxic protease or fragment thereof and the galanin Targeting Moiety; and a translocation domain that is capable of trans locating the protease or protease fragment from within an endosome, across the endosomal membrane and into the cytosol of the nociceptive sensory afferent. Nucleic acid sequences encoding the polypeptide fusion proteins, methods of preparing same and uses thereof are also described.

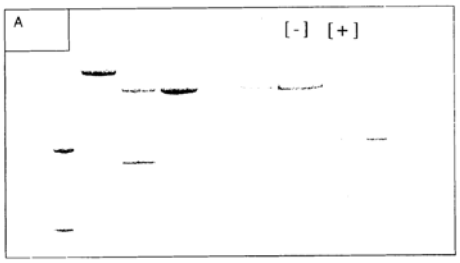

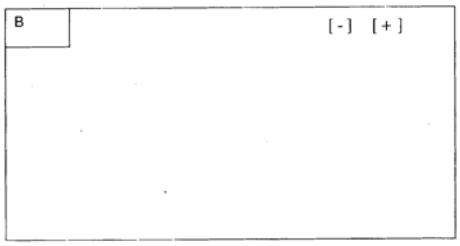

No. of Pages : 143 No. of Claims : 17

(12) PATENT APPLICATION PUBLICATION
(19) INDIA
(22) Date of filing of Application :24/09/2014
(21) Application No.2042/KOLNP/2014 A
(43) Publication Date : 19/12/2014

(54) Title of the invention : METHOD AND APPARATUS FOR CONTROLLING THE FLOTATION PROCESS OF PYRITE - CONTAINING SULPHIDE ORES

(51) International classification :B03D1/02
(31) Priority Document No :NA
(32) Priority Date :NA
(33) Name of priority country :NA
(86) International Application No :PCT/RU2012/000398
Filing Date :10/05/2012
(87) International Publication No :WO 2013/169140
(61) Patent of Addition to Application Number :NA
Filing Date :NA
(62) Divisional to Application Number :NA
Filing Date :NA

(71)**Name of Applicant :**
1)OUTOTEC (FINLAND) OY
Address of Applicant :Puolikkotie 10, FI-02230 Espoo **Finland**
(72)**Name of Inventor :**
1)ETELÄPÄÄ, Mika
2)MASHEVSKIY,Gennady Nikolaevich
3)PETROV,Aleksandr Vladimirovich
4)ROMANENKO,Sergei Aleksandrovich

(57) Abstract :
Method and apparatus for controlling the flotation process of sulphide ores including separation of sulphide minerals from pyrite in an alkaline environment created by lime. The method comprises measuring the molybdenum electrode potential of an aqueous slurry of the ore and adjusting the addition of lime based on the measured molybdenum electrode potential to maintain the molybdenum electrode potential of the slurry in a preselected range. The apparatus comprises means (6) for measuring the molybdenum electrode potential and a control unit (7) for controlling the addition of lime to the slurry based on the measured molybdenum electrode potential of the slurry.

No. of Pages : 22 No. of Claims : 8

(12) PATENT APPLICATION PUBLICATION
(19) INDIA
(22) Date of filing of Application :22/01/2011
(21) Application No.354/KOLNP/2011 A
(43) Publication Date : 19/12/2014

(54) Title of the invention : COLLAPSIBLE CONTAINER AND METHOD OF TRANSPORTING COLLAPSED LIKE CONTAINERS

(51) International classification :B65D1/40
(31) Priority Document No :2008/05471
(32) Priority Date :23/06/2008
(33) Name of priority country :South Africa
(86) International Application No :PCT/IB2009/052689
Filing Date :23/06/2009
(87) International Publication No : WO/2009/156945
(61) Patent of Addition to Application Number :NA
Filing Date :NA
(62) Divisional to Application Number :NA
Filing Date :NA

(71)**Name of Applicant :**
1)MECHANA CC
Address of Applicant :45 Haupt Street 6061 Sidwell South Africa
(72)**Name of Inventor :**
1)JOUBERT Simon John

(57) Abstract :
The invention provides a container which has an erect condition in which it defines a load space within which goods to be transported are receivable and a collapsed condition. The container is configured such that a plurality of like containers, when in their collapsed condition, are receivable in the container for transport together therewith. The container includes a pair of ends, at least one and preferably two sides, which, in the erect condition of the container extend between the ends and a base. The ends, the or each side and the base may be formed of elongate elements. Alternatively, the ends, sides and base may be clad such that the load space is partially or fully enclosed.

No. of Pages : 55 No. of Claims : 24

(12) PATENT APPLICATION PUBLICATION
(19) INDIA
(22) Date of filing of Application :13/06/2013

(21) Application No.707/KOL/2013 A
(43) Publication Date : 19/12/2014

(54) Title of the invention : FLY ASH CENOSPHERE COMPOSITES FOR SANITATION APPLICATIONS

(51) International classification :C04B20/00
(31) Priority Document No :NA
(32) Priority Date :NA
(33) Name of priority country :NA
(86) International Application No :NA
Filing Date :NA
(87) International Publication No : NA
(61) Patent of Addition to Application Number :NA
Filing Date :NA
(62) Divisional to Application Number :NA
Filing Date :NA

(71)**Name of Applicant :**
1)CENTRAL POWER RESEARCH INSTITUTE
Address of Applicant :REGIONAL TESTING LABORATORY, 1ST FLOOR, CTD WORKSHOP, WBSEB BN BLOCK ABHIKSHAN BUILDING, SECTOR-V,SALT LAKE CITY, KOLKATA-700091, HAVING ITS REGISTERED OFFICE AT PROF. SIR C.V. RAMAN ROAD, SADASHIVANAGAR, P.O. BOX. NO. 8066, BANGALORE-560080, INDIA
(72)**Name of Inventor :**
1)DR. M. SHEKHAR KUMAR
2)T.R. VENKATESH
3)DR. S. SEETHARAMU

(57) Abstract : A process for producing sanitation products using fly ash cenosphere composites comprising: mixing a mineral filler, a matrix material in the presence of a initiator system and a multivalent metal-salt accelerator at a temperature range of 25-30°C.

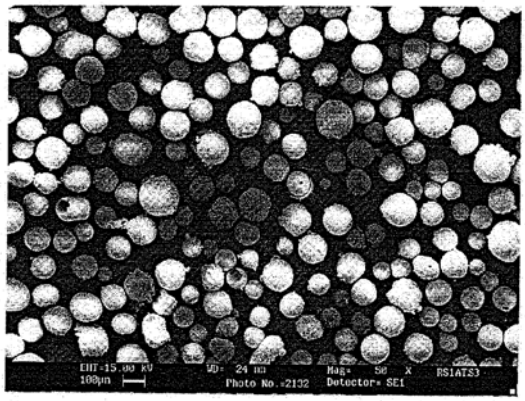

No. of Pages : 24 No. of Claims :6

(12) PATENT APPLICATION PUBLICATION
(19) INDIA
(22) Date of filing of Application :13/06/2013

(21) Application No.708/KOL/2013 A
(43) Publication Date : 19/12/2014

(54) Title of the invention : ANTIBACTERIAL HYDROGEL COMPOSITION AND APPLICATION THEREOF

(51) International classification	:A61L27/34, A61L27/54
(31) Priority Document No	:NA
(32) Priority Date	:NA
(33) Name of priority country	:NA
(86) International Application No	:NA
Filing Date	:NA
(87) International Publication No	: NA
(61) Patent of Addition to Application Number	:NA
Filing Date	:NA
(62) Divisional to Application Number	:NA
Filing Date	:NA

(71)**Name of Applicant :**
1)INDIAN INSTITUTE OF TECHNOLOGY, KHARAGPUR
Address of Applicant :SPONSORED RESEARCH & INDUSTRIAL CONSULTANCY, INDIAN INSTITUTE OF TECHNOLOOGY, KHARAGPUR-721302, WEST BENGAL, INDIA West Bengal India
(72)**Name of Inventor :**
1)ROY, ANUPAM
2)ROY, PROF. SANAT K.
3)MANDAL, DR. SANTI MOHAN
4)MANDAL, PROF. MAHITOSH

(57) Abstract : An antimicrobial hydrogel formulation comprising Abroma hydrogel based silver nanoparticles obtained of silver salt, and an aqueous stem extract of Abroma augusta Linn., which extract while reducing the silver ion to silver nanoparticles also stabilizes the same to inhibit agglomeration of the nano-Ag in solution in the complete absence of any external reducing and stabilizing agents and also allows the incorporation of optional skin benefiting agents such as Vitamin E without affecting the stability of such nano-Ag's already formed in solution.

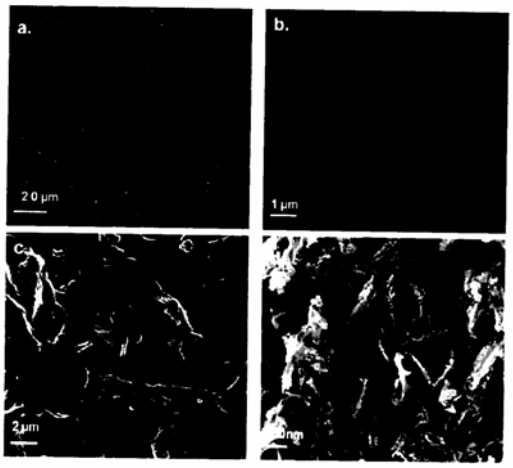

No. of Pages : 15 No. of Claims :11

(12) PATENT APPLICATION PUBLICATION
(19) INDIA
(22) Date of filing of Application :03/04/2012
(21) Application No.799/KOLNP/2012 A
(43) Publication Date : 19/12/2014

(54) Title of the invention : ELECTRIC POWER METER

(51) International classification :G01R11/56
(31) Priority Document No :2009-232010
(32) Priority Date :05/10/2009
(33) Name of priority country :Japan
(86) International Application No :PCT/IB2010/002476
Filing Date :29/09/2010
(87) International Publication No :WO 2011/042784
(61) Patent of Addition to Application Number :NA
Filing Date :NA
(62) Divisional to Application Number :NA
Filing Date :NA

(71)**Name of Applicant :**
1)PANASONIC CORPORATION
Address of Applicant :1006, OAZA KADOMA, KADOMA-SHI, OSAKA 571-8501, JAPAN
(72)**Name of Inventor :**
1)KENJI KUNIYOSHI

(57) Abstract :
An electric power meter separately measures an amount of electric power for purchase supplied from an electric power system and an amount of electric power for sale which is generated by an electricity generation device. The electric power meter detects a power flow of the electric power system and separately measures the amount of electric power for purchase and the amount of electric power for sale while distinguishing between the amount of electric power for purchase and the amount of electric power for sale on the basis of a direction of the detected power flow.

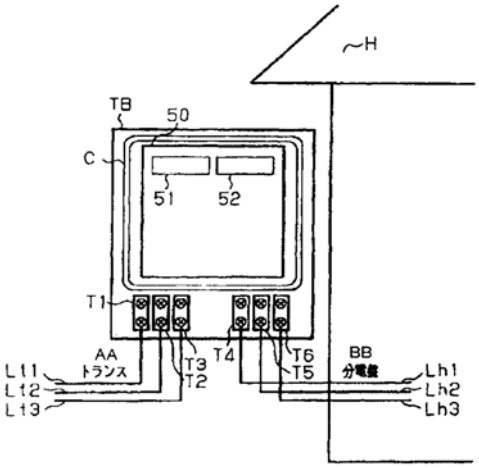

No. of Pages : 52 No. of Claims : 9

(12) PATENT APPLICATION PUBLICATION
(19) INDIA
(22) Date of filing of Application :16/09/2014
(21) Application No.1988/KOLNP/2014 A
(43) Publication Date : 19/12/2014

(54) Title of the invention : RECONFIGURABLE STENT-GRAFT DELIVERY SYSTEM

(51) International classification :A61F2/966
(31) Priority Document No :13/457,541
(32) Priority Date :27/04/2012
(33) Name of priority country :U.S.A.
(86) International Application No :PCT/US2013/026738
Filing Date :19/02/2013
(87) International Publication No :WO 2013/162688
(61) Patent of Addition to Application Number :NA
Filing Date :NA
(62) Divisional to Application Number :NA
Filing Date :NA

(71)**Name of Applicant :**
1)MEDTRONIC VASCULAR INC.
Address of Applicant :c/o Ip Legal Department, Medtronic Vascular Inc., 3576 Unocal Place, Santa Rosa, CA 95403 U.S.A.
(72)**Name of Inventor :**
1)ARGENTINE, Jeffery
2)HAGGARD, Mathew
3)MAGGARD, Jason
4)SIMMONS, Emilie

(57) Abstract :
A reconfigurable delivery system is disclosed having a multi-lumen delivery catheter configuration that permits the delivery and staged release of a self-expanding main vessel stent-graft and a delivery sheath configuration that permits the introduction of various medical devices for the delivery and implantation of various branch vessel stent-grafts that are to be mated with the main vessel stent-graft. A method is disclosed wherein the delivery system is first used in the multi-lumen delivery catheter configuration to deliver and release a main vessel stent-graft that is configured for placement in the abdominal aorta for treatment of shortneck infrarenal,juxtarenal, and/or suprarenal aneurysms and then used in the delivery sheath configuration to facilitate the delivery of branch vessel stent-grafts that are configured to extend from the main vessel stent-graft into a respective renal artery.

No. of Pages : 57 No. of Claims : 20

(12) PATENT APPLICATION PUBLICATION
(19) INDIA
(22) Date of filing of Application :16/09/2014
(21) Application No.1989/KOLNP/2014 A
(43) Publication Date : 19/12/2014

(54) Title of the invention : INFLUENZA VACCINES

(51) International classification :A61K39/145
(31) Priority Document No :1205189.2
(32) Priority Date :23/03/2012
(33) Name of priority country :U.K.
(86) International Application No :PCT/EP2013/055104
Filing Date :13/03/2013
(87) International Publication No :WO 2013/139655
(61) Patent of Addition to Application Number :NA
Filing Date :NA
(62) Divisional to Application Number :NA
Filing Date :NA

(71)**Name of Applicant :**
1)GLAXOSMITHKLINE BIOLOGICALS S.A.
Address of Applicant :Rue de lInstitut 89, B-1330 Rixensart BELGIUM Belgium
(72)**Name of Inventor :**
1)INNIS, Bruce, Lamont
2)ROY-GHANTA, Sumita

(57) Abstract :
The present invention relates to influenza vaccine compositions and vaccination schemes for immunising against influenza disease, in particular it relates to immunogenic compositions comprising an antigen or an antigenic preparation from a first influenza virus strain and an oil-in- water emulsion adjuvant for use in inducing a immune response against at least one second influenza virus strain wherein said second influenza virus strain is from a different type or from a different subtype than said first influenza virus strain.

No. of Pages : 39 No. of Claims : 36

(12) PATENT APPLICATION PUBLICATION
(19) INDIA
(22) Date of filing of Application :04/04/2012
(21) Application No.809/KOLNP/2012 A
(43) Publication Date : 19/12/2014

(54) Title of the invention : PLEATED FILTER ELEMENT WITH TAPERING BEND LINES

(51) International classification :B01D29/00
(31) Priority Document No :61/414,235
(32) Priority Date :16/11/2010
(33) Name of priority country :U.S.A.
(86) International Application No :PCT/US2011/054924
Filing Date :05/10/2011
(87) International Publication No :WO/2012/067729
(61) Patent of Addition to Application Number :NA
Filing Date :NA
(62) Divisional to Application Number :NA
Filing Date :NA

(71)**Name of Applicant :**
1)CUMMINS FILTRATION IP, INC.
Address of Applicant :1400 - 73RD AVENUE, NE MINNEAPOLIS, MN 55432, U.S.A. STATE OF INCORPORATION : DELAWARE U.S.A.
(72)**Name of Inventor :**
1)JERALD J. MOY
2)ERIC A. JANIKOWSKI
3)KENNETH M. TOFSLAND

(57) Abstract :
A pleated filter element extends axially between an upstream inlet and a downstream outlet along a plurality of axially extending bend lines forming axial flow channels. The bend lines taper in a transverse direction and define a plurality of axially elongated tetrahedron channels facing oppositely to each other.

No. of Pages : 26 No. of Claims : 24

(12) PATENT APPLICATION PUBLICATION
(19) INDIA
(22) Date of filing of Application :11/09/2014

(21) Application No.1933/KOLNP/2014 A
(43) Publication Date : 19/12/2014

(54) Title of the invention : BRUSHLESS DC MOTOR

(51) International classification :H02K21/12
(31) Priority Document No :218743
(32) Priority Date :20/03/2012
(33) Name of priority country :Israel
(86) International Application No :PCT/IL2013/050253
Filing Date :19/03/2013
(87) International Publication No :WO 2013/140400
(61) Patent of Addition to Application Number :NA
Filing Date :NA
(62) Divisional to Application Number :NA
Filing Date :NA

(71)**Name of Applicant :**
1)VASTECH HOLDINGS LTD.
Address of Applicant :149 Albion Road, London N16 9JU, UNITED KINGDOM
(72)**Name of Inventor :**
1)SHLAKHETSKI, VICTOR
2) MOSTOVOY ,Alexander
3)ZATSARININ,SERGEY
4)SHOIKHEDBROD, SIMEN

(57) Abstract :
A brushless DC motor comprises a plurality of magnets positioned at a distance from one another on a circular struc ture, and a plurality of solenoids provided each around a static solenoid housing, wherein said solenoid housing is structured with a void portion through which said plurality of magnets can pass when the circular structure comprising said plurality of magnets ro-tates around its axis.

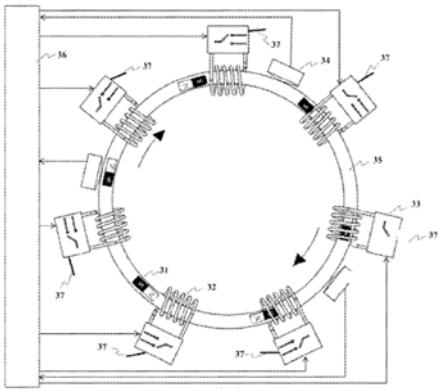

No. of Pages : 35 No. of Claims : 11

(12) PATENT APPLICATION PUBLICATION
(19) INDIA
(22) Date of filing of Application :19/09/2014
(21) Application No.2010/KOLNP/2014 A
(43) Publication Date : 19/12/2014

(54) Title of the invention : OBSERVATION AND/OR OPERATION OF A SPORT AND/OR REHABILITATION DEVICE

(51) International classification :H04L29/08,A63B24/00
(31) Priority Document No :10 2012 205 162.7
(32) Priority Date :29/03/2012
(33) Name of priority country :Germany
(86) International Application No :PCT/EP2013/055664
Filing Date :19/03/2013
(87) International Publication No :WO 2013/143918
(61) Patent of Addition to Application Number :NA
Filing Date :NA
(62) Divisional to Application Number :NA
Filing Date :NA

(71)**Name of Applicant :**
1)SIEMENS AKTIENGESELLSCHAFT
Address of Applicant :Wittelsbacherplatz 2, 80333 München,**Germany**
(72)**Name of Inventor :**
1)BRUSSOG Ingo
2)WITTKOWSKI Michael

(57) Abstract :
The invention relates to a method for observation and/or operation of a sport and/or rehabilitation device and to an open-loop and/or closed-loop control of a corresponding sport and/or rehabilitation device. The invention further relates to a program and to an application for carrying out the inventive method. In order to specify a low-cost solution for observation and/or operation of a sport and/or rehabilitation device, a method is proposed with an HMI, wherein a device from one of the classes smartphones, navigation devices, digital picture frames and tablet PCs is used as the HMI, wherein the HMI and the sport and/or rehabilitation device are connected to one another via a communication connection, wherein the HMI and the sport and/or rehabilitation device identify each other mutually, wherein the sport and/or rehabilitation device checks the HMI for its suitability for observation and/or operation and whereby, in the event of the HMI being suitable for observation and/or operation of the sport and/or rehabilitation device, an application is started at the HMI for observation and/or operation of the sport and/or rehabilitation device, and in the event of the HMI not being suitable for observation and/or operation of the sport and/or rehabilitation device, a signal is output.

No. of Pages : 34 No. of Claims : 16

(12) PATENT APPLICATION PUBLICATION
(19) INDIA
(22) Date of filing of Application :19/09/2014

(21) Application No.2011/KOLNP/2014 A
(43) Publication Date : 19/12/2014

(54) Title of the invention : LAUNDRY DRUM HAVING A STRUCTURE PATTERN AND LAUNDRY TREATMENT MACHINE COMPRISING SUCH LAUNDRY DRUM

(51) International classification :D06F37/02,D06F58/04
(31) Priority Document No :10 2012 204 560.0
(32) Priority Date :22/03/2012
(33) Name of priority country :Germany
(86) International Application No :PCT/EP2013/055373
Filing Date :15/03/2013
(87) International Publication No :WO 2013/139699
(61) Patent of Addition to Application Number :NA
Filing Date :NA
(62) Divisional to Application Number :NA
Filing Date :NA

(71)**Name of Applicant :**
1)BSH BOSCH UND SIEMENS HAUSGERÄTE GMBH
Address of Applicant :Carl-Wery-Str. 34, 81739 München,**Germany**
(72)**Name of Inventor :**
1)EGLMEIER,Hans

(57) Abstract :
The invention relates to a laundry drum (5) for a laundry treatment machine (6) comprising a drum casing (4). The drum casing (4) comprises a structure pattern (3). The structure pattern (3) is based on a penrose tiling (3) that is composed of a plurality of tiles (1,2). The invention further relates to a laundry treatment machine (6) that is used for washing and/or drying laundry and that comprises such a laundry drum (5).

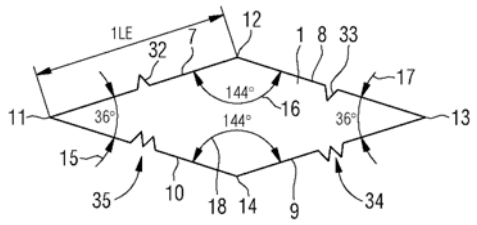

No. of Pages : 17 No. of Claims : 12

(12) PATENT APPLICATION PUBLICATION
(19) INDIA
(22) Date of filing of Application :19/09/2014

(21) Application No.2012/KOLNP/2014 A
(43) Publication Date : 19/12/2014

(54) Title of the invention : VEHICLE SUSPENSION ARM

(51) International classification :B60G7/00
(31) Priority Document No :NA
(32) Priority Date :NA
(33) Name of priority country :NA
(86) International Application No :PCT/JP2012/054147
Filing Date :21/02/2012
(87) International Publication No :WO 2013/124972
(61) Patent of Addition to Application Number :NA
Filing Date :NA
(62) Divisional to Application Number :NA
Filing Date :NA

(71)**Name of Applicant :**
1)YOROZU CORPORATION
Address of Applicant :3-7-60,Tarumachi,Kohoku-ku,Yokohama-shi, Kanagawa 2228560,JAPAN
(72)**Name of Inventor :**
1)NAKASATO Hidetoshi
2)BABA Yoichi

(57) Abstract :
[Problem] To provide a vehicle suspension arm which can be produced at a low cost and in which the shape of each constituent component can be simplified and the size and weight of the constituent components can be logically reduced. [Solution] When forming the lower arm (2) of a vehicle suspension, an arm main body (10) is configured from a pair of opposing side plates (11), a bottom plate (12) integrally formed with both side plates (11) so as to connect same, and a spring receiving seat member (13) attached to the side plates (11), wherein both side plates (11) are disposed so as to extend within the bottom region (R) of the spring receiving seat member (13).

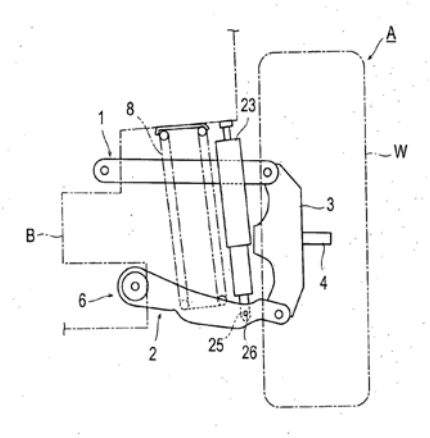

No. of Pages : 23 No. of Claims : 5

(12) PATENT APPLICATION PUBLICATION
(19) INDIA
(22) Date of filing of Application :13/06/2013

(21) Application No.709/KOL/2013 A
(43) Publication Date : 19/12/2014

(54) Title of the invention : A METHOD FOR COATING LEAD DIOXIDE ON MILD STEEL BY ELECTRODEPOSITION FROM ALKALINE BATH AND COATED ELECTRODE OBTAINED THEREOF

(51) International classification	:C25D3/00	(71)**Name of Applicant :**
(31) Priority Document No	:NA	**1)INDIAN INSTITUTE OF TECHNOLOGY, KHARAGPUR**
(32) Priority Date	:NA	Address of Applicant :SPONSORED RESEARCH & INDUSTRIAL CONSULTANCY, INDIAN INSTITUTE OF TECHNOLOGY, KHARAGPUR-721302, WEST BENGAL, INDIA West Bengal India
(33) Name of priority country	:NA	
(86) International Application No	:NA	
Filing Date	:NA	
(87) International Publication No	: NA	
(61) Patent of Addition to Application Number	:NA	(72)**Name of Inventor :**
Filing Date	:NA	**1)PILLAI, INDU MANOREMA SASIDHARAN**
(62) Divisional to Application Number	:NA	**2)GUPTA, ASHOK KUMAR**
Filing Date	:NA	**3)SRIVASTAVA, SUNEEL KUMAR**

(57) Abstract :The present invention relates to a process for coating lead dioxide onto mild steel by electro-deposition from an alkaline bath containing selective alkaline electrolyte comprising sodium hydroxide, lead monoxide and sodium dodecyl sulphate(SDS). More particularly, the method for the electrodeposition of lead dioxide on mild steel substrate is directed to obtaining thereby a cost-effective and efficient electrocatalyst for the electrochemical oxidation of organic materials present in wastewater. The advancement which is directed to provide an electrode to serve as cost-effective and efficient electrocatalyst having deposited mixture of a and PbO2on mild steel base plate with prospects of application such as in textile industry and also in treatment of phenolics in wastewater.

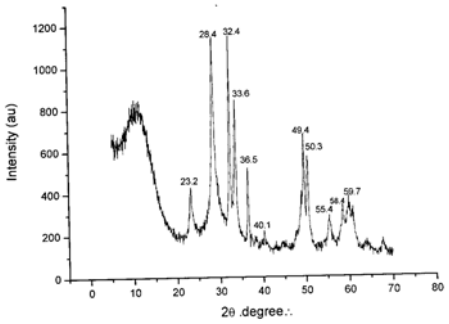

No. of Pages : 12 No. of Claims : 11

(12) PATENT APPLICATION PUBLICATION
(19) INDIA
(22) Date of filing of Application :18/06/2013
(21) Application No.724/KOL/2013 A
(43) Publication Date : 19/12/2014

(54) Title of the invention : DISTRIBUTED BINARY CELL REALIZING HYBRID CURRENT STEERING ARCHITECTURE BASED DIGITAL TO ANALOG CONVERTER.

(51) International classification	:G06F1/04, H03M1/06
(31) Priority Document No	:NA
(32) Priority Date	:NA
(33) Name of priority country	:NA
(86) International Application No	:NA
Filing Date	:NA
(87) International Publication No	: NA
(61) Patent of Addition to Application Number	:NA
Filing Date	:NA
(62) Divisional to Application Number	:NA
Filing Date	:NA

(71)**Name of Applicant :**
1)INDIAN INSTITUTE OF TECHNOLOGY, KHARAGPUR
Address of Applicant :SPONSORED RESEARCH & INDUSTRIAL CONSULTANCY, INDIAN INSTITUTE OF TECHNOLOGY, KHARAGPUR-721302, WEST BENGAL, INDIA. West Bengal India
(72)**Name of Inventor :**
1)SANTANU SARKAR
2)SWAPNA BANERJEE

(57) Abstract :A hybrid current steering digital to analog converter comprising plurality of Unary and Binary sub digital to analog converters operating in separated and repeated manner to realize a unary cell for converting digital code to its analog equivalent, wherein each of the sub-converter having current source adapted to be switchable in accordance with the digital code. Figure 4

No. of Pages : 18 No. of Claims : 10

(12) PATENT APPLICATION PUBLICATION
(19) INDIA
(22) Date of filing of Application :17/09/2014
(21) Application No.1994/KOLNP/2014 A
(43) Publication Date : 19/12/2014

(54) Title of the invention : METHOD FOR ADJUSTING PRECURSOR POWDER FOR SINTERED ORE, AND PRECURSOR POWDER FOR SINTERED ORE

(51) International classification :C22B1/16
(31) Priority Document No :2012-066333
(32) Priority Date :22/03/2012
(33) Name of priority country :Japan
(86) International Application No :PCT/JP2013/001934
Filing Date :21/03/2013
(87) International Publication No :WO 2013/140810
(61) Patent of Addition to Application Number :NA
Filing Date :NA
(62) Divisional to Application Number :NA
Filing Date :NA

(71)**Name of Applicant :**
1)JFE STEEL CORPORATION,
Address of Applicant :2-3, Uchisaiwai-cho 2-chome, Chiyoda-ku, Tokyo 100-0011 JAPAN
(72)**Name of Inventor :**
1)OYA, Kenji
2)HIGUCHI, Takahide

(57) Abstract :
According to the present invention, by adjusting a mixing ratio [(C/F) — 100] between the mass of an iron ore raw material (F) having particles with a diameter of not more than 0.5 mm, and the mass of coke breeze (C) having particles with a diameter of not more than 0.5 mm, to a range of seven to eight percent, a precursor powder for sintering,which is excellent for efficiently producing sinter,can be adjusted, without depending on the quality of the iron ore.

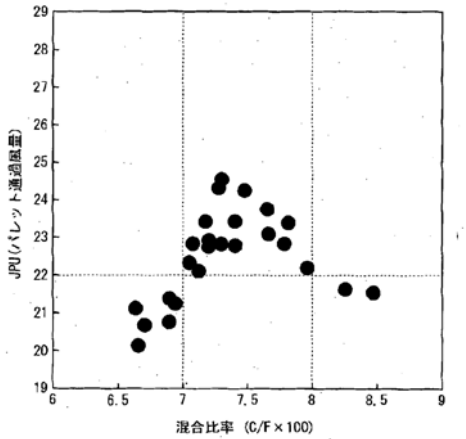

No. of Pages : 15 No. of Claims : 4

(12) PATENT APPLICATION PUBLICATION
(19) INDIA
(22) Date of filing of Application :11/06/2014
(21) Application No.637/KOL/2014 A
(43) Publication Date : 19/12/2014

(54) Title of the invention : ELECTRIC MOTOR

(51) International classification :H02K 1/00
(31) Priority Document No :201310233805.6
(32) Priority Date :13/06/2013
(33) Name of priority country :China
(86) International Application No :NA
Filing Date :NA
(87) International Publication No : NA
(61) Patent of Addition to Application Number :NA
Filing Date :NA
(62) Divisional to Application Number :NA
Filing Date :NA

(71)**Name of Applicant :**
1)JOHNSON ELECTRIC S.A.
Address of Applicant :BAHNHOFSTRASSE 18, CH-3280 MURTEN SWITZERLAND
(72)**Name of Inventor :**
1)QIN RUI FENG
2)WANG DI
3)LIANG JI YU
4)REN GUO DONG
5)LI YONG BIN
6)XIE XIAO WU
7)ZHAO YAO
8)WU XIAN MING
9)HAN SHENG

(57) Abstract :
An electric motor includes a stator having multiple magnetic poles and a rotor rotatably mounted to the stator. The rotor includes a shaft, a commutator and a rotor core fixed to the shaft; and windings wound on the rotor core and electrically connected to the commutator. The rotor core is formed by stacking a plurality of laminations. Each lamination includes an inner ring having a hole for fixing the shaft; an outer ring radially spaced from the inner ring; multiple teeth extending outwardly from the outer ring, and multiple ribs connecting the inner ring to the outer ring. Each rib has a width w measured in a circumferential direction of the lamination. The number of ribs is n. The width w and the number n satisfy the formula:, where the width w is measured in millimetres.

No. of Pages : 18 No. of Claims : 11

(12) PATENT APPLICATION PUBLICATION
(19) INDIA
(22) Date of filing of Application :13/06/2013

(21) Application No.706/KOL/2013 A
(43) Publication Date : 19/12/2014

(54) Title of the invention : A NOVEL METHOD FOR SYNTHESIS OF DAWSONITE FROM FLY ASH

(51) International classification	:C01F7/00
(31) Priority Document No	:NA
(32) Priority Date	:NA
(33) Name of priority country	:NA
(86) International Application No	:NA
Filing Date	:NA
(87) International Publication No	: NA
(61) Patent of Addition to Application Number	:NA
Filing Date	:NA
(62) Divisional to Application Number	:NA
Filing Date	:NA

(71)**Name of Applicant :**
1)CENTRAL POWER RESEARCH INSTITUTE
Address of Applicant :REGIONAL TESTING LABORATORY, 1ST FLOOR, CTD WORKSHOP, WBSEB BN BLOCK ABHIKSHAN BUILDING, SECTOR-V,SALT LAKE CITY, KOLKATA-700091, HAVING ITS REGISTERED OFFICE AT PROF. SIR C.V. RAMAN ROAD, SADASHIVANAGAR, P.O. BOX. NO. 8066, BANGALORE-560080, INDIA
(72)**Name of Inventor :**
1)DR. M. SHEKHAR KUMAR
2)K. SURYANARAYANA
3)DR. S. SEETHARAMU

(57) Abstract : A process for producing dawsonite from fly ash comprising; subjecting fly ash to the step of sintering to produce free alumina leaching the sodium aluminate formed during sintering in an alkaline solution, carbonating the said solution to precipitate the product.

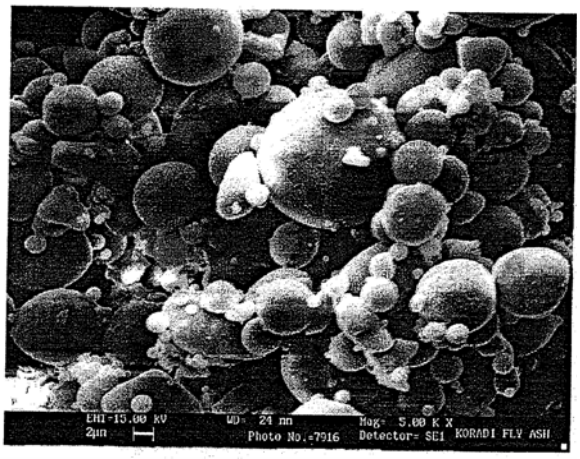

No. of Pages : 17 No. of Claims :5

(12) PATENT APPLICATION PUBLICATION
(19) INDIA
(22) Date of filing of Application :23/09/2014
(21) Application No.2030/KOLNP/2014 A
(43) Publication Date : 19/12/2014

(54) Title of the invention : MONITORING AND CONTROL OF SOIL CONDITIONS

(51) International classification :A01B79/00,A01C21/00,G01N1/14
(31) Priority Document No :61/603,680
(32) Priority Date :27/02/2012
(33) Name of priority country :U.S.A.
(86) International Application No :PCT/IB2012/002718
Filing Date :18/10/2012
(87) International Publication No :WO 2013/128232
(61) Patent of Addition to Application Number :NA
Filing Date :NA
(62) Divisional to Application Number :NA
Filing Date :NA

(71)**Name of Applicant :**
1)AGQ Technological Corporate S.A.
Address of Applicant :Ctra. A-433 Km 24 Burguillos E-41220 Sevilla, Spain
(72)**Name of Inventor :**
1)MARTINEZ,Estanislao,Martinez,Ph.D.

(57) Abstract :
Various methods are provided for monitoring and control of soil conditions. In one example, among others, a method includes obtaining aqueous samples from suction probes (32) within a soil substrate and analyzing the aqueous samples to determine a chemical composition of the soil substrate. Amounts of an additive may be determined to adjust the chemical composition of the soil substrate. In another example, a method includes installing a suction probe within a soil substrate; drawing a vacuum to induce hydraulic conduction of aqueous solutions from the soil substrate; extracting an aqueous sample; and analyzing the aqueous sample to determine a chemical composition of the soil substrate. In an other example, a method includes obtaining a composition of a fertilizer solution (FS) supplied to a soil substrate and a chemical composition within the soil substrate; determining nutrient utilization, and providing an amount of additive to produce a subsequent FS for supply.

No. of Pages : 106 No. of Claims : 32

(12) PATENT APPLICATION PUBLICATION
(19) INDIA
(22) Date of filing of Application :23/09/2014

(21) Application No.2031/KOLNP/2014 A
(43) Publication Date : 19/12/2014

(54) Title of the invention : RECONFIGURABLE STENT-GRAFT DELIVERY SYSTEM AND METHOD OF USE

(51) International classification :A61F2/95
(31) Priority Document No :13/457,544
(32) Priority Date :27/04/2012
(33) Name of priority country :U.S.A.
(86) International Application No :PCT/US2013/026739
Filing Date :19/02/2013
(87) International Publication No :WO 2013/162689
(61) Patent of Addition to Application Number :NA
Filing Date :NA
(62) Divisional to Application Number :NA
Filing Date :NA

(71)**Name of Applicant :**
1)MEDTRONIC VASCULAR INC.
Address of Applicant :c/o IP Legal Department, Medtronic Vascular Inc. 3576 Unocal Place, Santa Rosa,California 95403 United State of America
(72)**Name of Inventor :**
1)MAGGARD,Jason
2)ARGENTINE,Jeffery

(57) Abstract :
A reconfigurable delivery system (100) is disclosed having a multi-lumen delivery catheter configuration that permits the delivery and staged release of a self-expanding main vessel stent-graft and a delivery sheath (104) configuration that permits the introduction of various medical devices for the delivery and implantation of various branch vessel stent- grafts that are to be mated with the main vessel stent-graft. A method is disclosed wherein the delivery system is first used in the multi-lumen delivery catheter configuration to deliver and release a main vessel stent-graft that is configured for placement in the abdominal aorta for treatment of short-neck infrarenal, juxtarenal, and/or suprarenal aneurysms and then used in the delivery sheath configuration to facilitate the delivery of branch vessel stent- grafts that are configured to extend from the main vessel stent-graft into a respective renal artery.

No. of Pages : 57 No. of Claims : 20

UNDER SEC.78(4) & RULE 123(KOLKATA)

An application for correction in the name of the Patentee from M/s. ENTRIQ to M/s. ENTRIQ INC. in respect of Patent No.241079(IN/PCT/2002/1145/KOL) was filed.

Any person interested may at any time within three months from the date of this publication give notice on Form-14, if any, to the Controller of Patents, at the appropriate office .

PUBLICATION U/S.60 IN RESPECT OF APPLICATION FOR RESTORATION OF PATENTS (KOLKATA)

Notice is hereby given that application for restoration of under mentioned Patents have been allowed and said Patents are restored.

Sl.No	Appln. No.	Patent No.	Applicants	Title	Date of Publication U/R.84(3)	Appropriate Office
1.	1/KOL/2004	225945	ETHICON ENDO-SURGERY, INC. ,	AN ENDOSCOPE FOR THE GASTROINTESTINAL TRACT.	08/08/2014	kolkata

Publication Under Section 43(2) in Respect of the Grant

Following Patents have been granted and any person interested in opposing these patents under Section 25(2) may at any time within one year from the date of this issue, give notice to the Controller of Patents at the appropriate office, on the prescribed form-7 along with written statement and evidence, if any.

Serial Number	Patent Number	Application Number	Date of Application	Date of Priority	Title of Invention	Name of Patentee	Date of Publication of Abstract u/s 11(A)	Appropriate Office
1	264183	848/DEL/2006	28/03/2006 15:23:56		WATER-SOLUBLE MACROMONOMER HAVING TERMINAL UNSATURATION AND PROCESS FOR THE PREPARATION THEREOF.	COUNCIL OF SCIENTIFIC & INDUSTRIAL RESEARCH	30/03/2012	DELHI
2	264184	3845/DELNP/2008	17/11/2006	17/11/2005	OPTHALMOLOGICAL PHARMACEUTICAL COMPOSITION DEVOID OF DEXPANTHENOL, CALCIUM IONS, AND PHOSPHATE,	URSAPHARM ARZNEIMITTEL GMBH AND CO. KG	29/08/2008	DELHI
3	264189	4992/DELNP/2007	20/12/2005	30/12/2004	SYSTEM AND METHOD FOR MANAGING COMMUNICATION LINKS BETWEEN NODES IN A WIRELESS COMMUNICATION NETWORK	MESHNETWORKS, INC.	17/08/2007	DELHI
4	264190	773/DEL/2006	22/03/2006 12:10:18		A PROCESS FOR THE PRODUCTION OF LANTHANUM CHROMITE BASED OXIDES USING A MLTIPURPOSE CHROMIUM SOURCE	COUNCIL OF SCIENTIFIC & INDUSTRIAL RESEARCH	30/03/2012	DELHI
5	264191	6924/DELNP/2008	12/02/2007	13/02/2006	A COMPOSITION FOR THE TREATMENT OF SIALORRHOEA	ORIENT PHARMA (SAMOA) CO.,LTD.	24/10/2008	DELHI
6	264195	3675/DELNP/2006	05/07/2005	07/07/2004	METHOD OF PRODUCING CYCLIC OLEFIN POLYMERS HAVING POLAR FUNCTIONAL GROUPS, OLEFIN POLYMER PRODUCED USING THE METHOD AND OPTICAL ANISOTROPIC FILM COMPRISING THE SAME	LG CHEM. LTD.	03/08/2007	DELHI
7	264196	3044/DELNP/2010	01/10/2007	01/10/2007	SEPARATING OLEFIN STREAMS	LUMMUS TECHNOLOGY INC.,EXXON MOBIL CHEMICAL COMPANY	07/01/2011	DELHI
8	264197	5773/DELNP/2007	02/02/2006	08/02/2005	CURABLE COMPOSITION AND METHOD OF MAKING IT	PRC-DESOTO INTERNATIONAL, INC,	17/08/2007	DELHI

9	264198	3347/DELNP/2008	20/11/2006	21/11/2005	MULTIMODAL POLYPROPYLENE POLYMER COMPOSITION	BOREALIS TECHNOLOGY OY	04/07/2008	DELHI
10	264199	6867/DELNP/2008	15/02/2007	08/03/2006	A STORAGE-STABLE FLOWABLE, ONE COMPONENT POLYURETHANE COMPOSITION	CHEMTURA CORPORATION	12/09/2008	DELHI
11	264201	1511/DEL/2007	18/07/2007 13:12:47	04/09/2006	BATTERY CELL WITH SMALL GROOVE AT SURFACE AND BATTERY PACK INCLUDING THE SAME	LG CHEM, LTD.,	04/04/2008	DELHI
12	264203	4446/DELNP/2009	26/02/2008	07/03/2007	Refractory Carbon-Bonded Magnesia Brick and Process for Producing it	Refratechnik Holding GmbH	27/04/2012	DELHI
13	264204	126/DELNP/2008	03/07/2006	14/07/2005	"A DEVICE SYSTEM AND METHOD FOR IMPLEMENTING THE MULTI-CARRER HIGH SPEED DOWNLINK PACKET ACCESS SERVICE"	SHANGHAI ULTIMATE POWER COMMUNICATIONS TECHNOLOGY CO., LTD.	20/06/2008	DELHI
14	264206	2350/DEL/2009	16/11/2009 11:45:37	10/12/2008	METHOD FOR GENERATION OF HYDROGEN GAS	ROHM AND HAAS COMPANY	09/07/2010	DELHI
15	264207	2174/DEL/2008	17/09/2008	26/09/2007	PROCESS FOR THE SYNTHESIS OF STRONTIUM RANELATE OF FORMULA (I)	LES LABORATOIRES SERVIER	17/07/2009	DELHI
16	264208	2970/DELNP/2004	28/03/2003	08/04/2002	METHOD AND SYSTEM FOR ENABLING CONNECTIONS INTO NETWORKS WITH LOCAL ADDRESS REALMS	TELEFONAKTIEBOLAGET LM ERICSSON (PUBL)	13/11/2009	DELHI
17	264220	4841/DELNP/2006	25/02/2005	25/02/2004	BENZOPYRAN COMPOUND OF FORMULA (I)	NISSAN CHEMICAL INDUSTRIES LTD	10/08/2007	DELHI
18	264221	7467/DELNP/2007	03/05/2006	30/05/2005	PERITONEAL DIALYSIS FLUID COMPOSITION	FRESENIUS MEDICAL CARE DEUTSCHLAND GmbH	11/07/2008	DELHI
19	264222	1771/DELNP/2008	09/08/2006	11/08/2005	PEPTIDES FOR TREATMENT AND DIAGNOSIS OF AUTOIMMUNE DISEASE	ARPI MATOSSIAN ROGERS	27/06/2008	DELHI
20	264223	460/DELNP/2008	22/06/2006	22/06/2005	A CLOSED LOOP POWER CONTROL METHOD OF REVERSE SUPPLEMENT CHANNEL	HUAWEI TECHNOLOGIES CO., LTD.	15/08/2008	DELHI
21	264225	1991/DELNP/2008	29/08/2006	07/09/2005	OPTICAL ELEMENT ADAPTED TO POSSESS LIGHT INFLUENCING PROPERTY	TRANSITIONS OPTICAL, INC.	04/07/2008	DELHI
22	264226	8350/DELNP/2007	24/02/2006	15/04/2005	A RECOMBINANT LENTIVIRUS HAVING A GLYCOPROTEIN 120 SIGNAL PEPTIDE AND THE VACCINE COMPRISING SAID RECOMBINANT LENTIVIRUS	THE UNIVERSITY OF WESTERN ONTARIO	11/01/2008	DELHI

23	264236	2883/DELNP/2008	28/09/2006	30/09/2005	SUSTAINED RELEASE SMALL MOLECULE DRUG FORMULATION	ALZA CORPORATION	25/07/2008	DELHI
24	264239	8805/DELNP/2007	01/05/2006	22/05/2005	PROVIDING A MULTICAST SERVICE USING A MULTICAST GROUP-SOURCE KEY	CISCO TECHNOLOGY, INC.	04/04/2008	DELHI
25	264241	40/DEL/2007	04/01/2007	24/10/2006	METERING SOLENOID VALVE FOR A FUEL INJECTOR	C.R.F. SOCIETA CONSORTILE PER AZIONI	16/05/2008	DELHI
26	264244	2740/DELNP/2005	29/07/2004	23/01/2004	EFFICIENT CODING OF DIGITAL MEDIA SPECTRAL DATA USING WIDE-SENSE PERCEPTUAL SIMILARITY	MICROSOFT CORPORATION	02/10/2009	DELHI
27	264246	714/DELNP/2008	25/08/2006	26/08/2005	COMPLEXES AND METHODS FOR DETERMINING CELL CULTURE HISTORY	PLASTICELL LIMITED	11/07/2008	DELHI
28	264247	3078/DELNP/2008	28/05/2002	25/05/2001	A PHARMACEUTICAL COMPOSITION FOR ALTERING THE AFFINITY OF A NUCLEIC ACID LIGAND FOR A COAGULATION FACTOR IN A MAMMALIAN HOST	DUKE UNIVERSITY	27/06/2008	DELHI
29	264248	5823/DELNP/2009	17/03/2008	20/03/2007	LAUNDRY DETERGENT COMPOSITION WITH A REACTICVE DYE	THE PROCTER & GAMBLE COMPANY	04/06/2010	DELHI
30	264254	3022/DELNP/2008	13/11/2006	29/11/2005	METHOD FOR TEMPERING GLASS SHEETS	PPG INDUSTRIES OHIO, INC.	08/08/2008	DELHI
31	264255	1312/DELNP/2009	25/07/2007	25/07/2006	CYTOKINE DERIVATIVES	MINTAKA FOUNDARION FOR MEDICAL RESEARCH	31/07/2009	DELHI
32	264256	7037/DELNP/2008	20/02/2007	03/03/2006	A PROCESS FOR RE-PROCESSING OF A FISCHER-TROPSCH CATALYST	JOHNSON MATTHEY PLC	03/10/2008	DELHI
33	264258	3383/DELNP/2009	29/11/2007	06/12/2006	METHOD FOR MANUFACTURING A SHAPED ARTICLE	THE PROCTER & GAMBLE COMPANY	09/04/2010	DELHI
34	264259	7625/DELNP/2006	16/06/2005	30/06/2004	ENGINE OPERATION WITHOUT CAM SENSOR	GENERAL ELECTRIC COMPANY	17/08/2007	DELHI
35	264260	2608/DELNP/2009	27/07/2007	22/11/2006	A PROCESS FOR COMPREHENSIVELY UTILIZING STEAM EXPLODED RADIX PUERARIAE AND DEVICE THEREFOR	INSTITUTE OF PROCESS ENGINEERING, CHINESE ACADEMY OF SCIENCES,HU NAN QIANGSHENG MEDICINE CO., LTD.	19/06/2009	DELHI
36	264264	7345/DELNP/2007	24/03/2006	25/03/2005	A METHOD OF IDENTIFYING A STABLE VH AND/OR A VL ANTIBODY FRAGMENT	NATIONAL RESEARCH COUNCIL OF CANADA	26/10/2007	DELHI

37	264266	1246/DELNP/2007	23/08/2005	01/10/2004	MULTIPLE ANTENNA PROCESSING ON TRANSMIT FOR WIRELESS LOCAL AREA NETWORKS	CISCO TECHNOLOGY, INC.	03/08/2007	DELHI
38	264272	674/DEL/2002	24/06/2002	25/06/2001	A HIGH-VOLTAGE INTERRUPTER DEVICE HAVING COMBINED VACUUM AND GAS INTERRUPTION	ALSTOM	09/05/2008	DELHI
39	264276	4834/DELNP/2009	02/05/2003	02/05/2003	A NUCLEIC ACID CONSTRUCT	BIOCERES S.A.,	05/03/2010	DELHI
40	264279	1831/DELNP/2006	04/10/2004	06/10/2003	PROCESS FOR THE PARALLEL DETECTION OF CRYSTALLINE FORMS OF MOLECULAR SOLIDS	SOLVIAS AG	31/08/2007	DELHI

Publication Under Section 43(2) in Respect of the Grant

Following Patents have been granted and any person interested in opposing these patents under Section 25(2) may at any time within one year from the date of this issue, give notice to the Controller of Patents at the appropriate office, on the prescribed form-7 along with written statement and evidence, if any.

Serial Number	Patent Number	Application Number	Date of Application	Date of Priority	Title of Invention	Name of Patentee	Date of Publication of Abstract u/s 11(A)	Appropriate Office
1	264218	666/MUMNP/2009	17/09/2007	18/09/2006	GASTROINTESTINAL CAPSULE	VIBRANT LTD.	29/05/2009	MUMBAI
2	264219	2384/MUMNP/2010	27/04/2009	30/04/2008	WATER-REACTIVEAL COMPOSITE MATERIAL,	ULVAC, INC.	04/03/2011	MUMBAI
3	264245	1239/MUM/2008	11/06/2008		A PROCESS FOR PRODUCTION OF ALKYL ESTERS	TATA CHEMICALS LTD.	18/12/2009	MUMBAI

Publication Under Section 43(2) in Respect of the Grant

Following Patents have been granted and any person interested in opposing these patents under Section 25(2) may at any time within one year from the date of this issue, give notice to the Controller of Patents at the appropriate office, on the prescribed form-7 along with written statement and evidence, if any.

Serial Number	Patent Number	Application Number	Date of Application	Date of Priority	Title of Invention	Name of Patentee	Date of Publication of Abstract u/s 11(A)	Appropriate Office
1	188104	1290/MAS/1994	26/12/1994		MOTORCYCLE	HONDA GIKEN KOGYO KABUSHIKI KAISHA		CHENNAI
2	264180	1378/CHENP/2007	12/10/2005	14/10/2004	A METHOD AND APPARATUS FOR MONITORING AND CONTROLLING THE STABILITY OF A BURNER OF A FIRED HEATER	SHELL INTERNATIONALE RESEARCH MAATSCHAPPIJ B.V.	31/08/2007	CHENNAI
3	264182	6864/CHENP/2008	17/07/2007	19/07/2006	RADIO INTERFACE SELECTION FOR A TERMINAL	Qualcomm Incorporated	21/08/2009	CHENNAI
4	264186	2408/CHE/2008	30/09/2008	02/10/2007	A METHOD FOR ESTABLISHING A CONNECTION BETWEEN THE CLIENT AND SERVER ON A NETWORK	ECHOSTAR TECHNOLOGIES, L.L.C.	21/08/2009	CHENNAI
5	264187	63/CHE/2009	09/01/2009 16:26:52	09/01/2008	FUEL SUPPLY DEVICE	DENSO CORPORATION	14/08/2009	CHENNAI
6	264188	4075/CHENP/2006	05/04/2005	06/04/2004	ADJUSTABLE TOOL FOR CANNULATED FASTENERS	SYNTHES GMBH	15/06/2007	CHENNAI
7	264194	3259/CHENP/2007	04/11/2005	25/01/2005	METHOD AND DEVICE FOR REMOVING FOREIGN MATTERS FROM A FIBRE MATERIAL, IN PARTICULAR FROM RAW COTTON	USTER TECHNOLOGIES AG	16/11/2007	CHENNAI
8	264202	1934/CHENP/2010	10/10/2008	12/10/2007	MICROREACTOR AND LIQUID PHASE CHEMICAL REACTION METHOD USING MICROREACTOR	NIPPON SODA CO., LTD.,OSAKA PREFECTURE UNIVERSITY PUBLIC CORPORATION	10/09/2010	CHENNAI
9	264205	2657/CHENP/2008	28/11/2006	28/11/2005	NON-AQUEOUS PIGMENT DISPERSIONS USING DISPERSION SYNERGISTS	AGFA GRAPHICS NV	06/03/2009	CHENNAI
10	264209	4893/CHENP/2008	13/03/2007	15/03/2006	ROLLED MATERIAL FOR FRACTURE SPLITTING-TYPE CONNECTING ROD	KABUSHIKI KAISHA KOBE SEIKO SHO (KOBE STEEL, LTD.)	13/03/2009	CHENNAI

11	264210	5273/CHENP/2007	19/05/2006	20/05/2005	PROCESS FOR PREPARING AN EPOXIDE	SOLVAY (SOCIETE ANONYME)	25/01/2008	CHENNAI
12	264211	6326/CHENP/2008	12/06/2007	13/06/2006	METHOD FOR PREPARING METAL DIHYDROXYBENZENE DISULFONATES	RHODIA OPERATIONS	27/03/2009	CHENNAI
13	264213	2832/CHENP/2008	05/12/2006	09/12/2005	PROCESS FOR THE PRODUCTION AND FORM PRESERVATION OF AN EXTRUDED PRODUCT MADE OF CEMENTITIOUS MATERIAL	ITALCEMENTI S.P.A	06/03/2009	CHENNAI
14	264214	4957/CHENP/2007	02/05/2006	04/05/2005	4-PHENYL-5-OXO-1,4,5,6,7,8-HEXAHYDROQUINOLINE DERIVATIVES FOR THE TREATMENT OF INFERTILITY	MERCK SHARP & DOHME B.V.	11/01/2008	CHENNAI
15	264215	1071/CHENP/2007	09/09/2005	14/09/2004	ROLLING STAND FOR PRODUCING ROLLED STRIP	SMS SIEMAG AKTIENGESELLSCHAFT	31/08/2007	CHENNAI
16	264217	1097/CHE/2006	28/06/2006		NEW METHOD OF PRODUCTION OF COMPACT YARN	SUNDARMAOORTHY SUBRAMANIAN,,ABDUL HAMEED PEER MOHAMED,PARAMASIVAM DHANAPAL,	28/11/2008	CHENNAI
17	264224	2371/CHE/2007	19/10/2007 14:37:46		STONE SETTING	Titan Industries Limited	25/12/2009	CHENNAI
18	264228	6916/CHENP/2008	29/05/2006	29/05/2006	COLD AND/OR HEAT ACCUMULATOR	WEBASTO AG	27/03/2009	CHENNAI
19	264234	2079/CHENP/2007	15/10/2004	15/10/2004	PRINT STRUCTURE, PRINTING METHOD AND READING METHOD FOR MEDIUM SURFACE WITH PRINT-FORMED DOT PATTERN	YOSHIDA, KENJI	07/09/2007	CHENNAI
20	264235	388/CHE/2005	07/04/2005		NOVEL PROCESS FOR PREPARING OPIPRAMOL DIHYDROCHLORIDE	R.L. FINE CHEM	08/06/2007	CHENNAI
21	264237	1522/CHENP/2008	22/08/2006	30/08/2005	PROCESS FOR PRODUCING 2,3-DIHYDROPYRIDAZINE COMPOUND	SUMITOMO CHEMICAL COMPANY LIMITED	28/11/2008	CHENNAI
22	264238	6010/CHENP/2007	08/06/2006	15/06/2005	PROCESS FOR THE MANUFACTURE OF AMINOALKYL GROUP CONTAINING GUAR DERIVATIVE	Dow Global Technologies LLC	27/06/2008	CHENNAI
23	264240	2484/CHENP/2007	09/12/2005	09/12/2004	LOST MOTION CAM ACTUATING DEVICE	MAGNA CLOSURES INC.	07/09/2007	CHENNAI

24	264242	1119/CHENP/2007	08/09/2005	16/09/2004	AN APPARATUS FOR MEASURING PLANT ROOT	CROPDESIGN N.V.	17/08/2007	CHENNAI
25	264249	387/CHE/2005	07/04/2005		A NOVEL PROCESS FOR PREPARING PROTRIPTYLINE HYDROCHLORIDE	R.L. FINE CHEM	08/06/2007	CHENNAI
26	264250	2211/CHENP/2007	21/10/2005	22/10/2004	A THREE-DIMENSIONAL PUZZLE OR PUZZLE OR DISPLAY-PLATFORM	STOLTEN, MARK, RANDALL,STOLTEN, ELIZABETH, MARY,WORRALL, FREDERICK, BRIAN	07/09/2007	CHENNAI
27	264252	1780/CHE/2008	24/07/2008 16:19:45	24/07/2007	A STORAGE BATTERY PROVIDED WITH A MONOBLOCK BATTERY CONTAINER	THE FURUKAWA BATTERY CO., LTD.,HONDA MOTOR CO., LTD.	21/08/2009	CHENNAI
28	264261	812/CHE/2008	01/04/2008	02/04/2007	METHOD OF OPERATING AND CONTROLLING A FUEL STACK IN A VEHICLE	GM GLOBAL TECHNOLOGY OPERATIONS, INC	11/09/2009	CHENNAI
29	264265	1694/CHE/2008	14/07/2008	28/08/2008	A METHOD OF SYNTHESIZING A SUBSTANTIALLY MONODISPERSED MIXTURE OF OLIGOMERS	BIOCON LIMITED	22/01/2010	CHENNAI
30	264269	2660/CHENP/2008	28/11/2006	28/11/2005	NON-AQUEOUS INKJET INKS OF QUINACRIDONE PIGMENTS	AGFA GRAPHICS NV	06/03/2009	CHENNAI
31	264270	732/CHENP/2007	10/08/2005	20/08/2004	PROCESS FOR USE IN GAS PHASE REACTIONS	DAVY PROCESS TECHNOLOGY LIMITED	24/08/2007	CHENNAI
32	264271	4628/CHENP/2008	20/02/2007	02/03/2006	METHOD FOR PRODUCING SECONDARY BUTANOL	EDEMITSU KOSAN CO., LTD.,	13/03/2009	CHENNAI
33	264273	999/CHENP/2008	28/08/2006	31/08/2005	REFRIGERATOR OIL COMPOSITION	IDEMITSU KOSAN CO., LTD	28/11/2008	CHENNAI
34	264278	211/CHE/2009	29/01/2009 17:07:58	31/01/2008	OPERATION CONTROLLING SYSTEM FOR INTERNAL COMBUSTION ENGINE	HONDA MOTOR CO., LTD.	14/08/2009	CHENNAI

Publication Under Section 43(2) in Respect of the Grant

Following Patents have been granted and any person interested in opposing these patents under Section 25(2) may at any time within one year from the date of this issue, give notice to the Controller of Patents at the appropriate office, on the prescribed form-7 along with written statement and evidence, if any.

Serial Number	Patent Number	Application Number	Date of Application	Date of Priority	Title of Invention	Name of Patentee	Date of Publication of Abstract u/s 11(A)	Appropriate Office
1	264181	1531/KOLNP/2008	14/09/2006	16/09/2005	CYCLOPROPYL AMINES AS MODULATORS OF THE HISTAMINE H3 RECEPTOR	JANSSEN PHARMACEUTICA N.V.	02/01/2009	KOLKATA
2	264185	4310/KOLNP/2008	05/04/2007	02/05/2006	A CONTROLLER FOR A TOUCH SURFACE AND A METHOD OF OPERATING A TOUCH SURFACE	APPLE INC.	06/03/2009	KOLKATA
3	264192	2591/KOLNP/2009	27/12/2007	28/12/2006	A METHOD FOR PRODUCING AN ORGANOPOLYSILOXAN E	DOW CORNING TORAY CO., LTD.	04/09/2009	KOLKATA
4	264193	2540/KOLNP/2007	21/12/2005	23/12/2004	AMINE-ALDEHYDE RESINS AND USES THEREOF IN SEPARATION PROCESSES	GEORGIA-PACIFIC CHEMICALS LLC.	24/08/2007	KOLKATA
5	264200	4100/KOLNP/2007	26/04/2006	09/05/2005	OPTICAL DISK RECORDING METHOD AND OPTICAL DISK DEVICE	RICOH COMPANY, LTD.	04/04/2008	KOLKATA
6	264212	1243/KOL/2008	22/07/2008	23/07/2007	METHOD OF PREVENTING DISRUPTION OF MEDIA STREAM TRANSMITTED ACROSS LOSSY NETWORK	POLYCOM, INC.	01/05/2009	KOLKATA
7	264216	559/KOL/2008	20/03/2008	30/03/2007	EIGHT SPEED AUTOMATIC TRANSMISSION	GM GLOBAL TECHNOLOGY OPERATIONS INC.	17/04/2009	KOLKATA
8	264227	631/KOL/2006	27/06/2006		APPARATUS FOR AUTOMATIC MEASUREMENT OF TAPER VALUE ON BORE OF BALL BEARING INNER RACES	TATA STEEL LIMITED	10/04/2009	KOLKATA
9	264229	1025/KOLNP/2009	10/10/2007	12/10/2006	NEW IMIDAZOLONE DERIVATIVES, PREPARATION THEREOF AS DRUGS, PHARMACEUTICAL, COMPOSITIONS, AND USE THEREOF AS PROTEIN KINASE INHIBITORS, IN PARTICULAR CDC7	SANOFI-AVENTIS	22/05/2009	KOLKATA

10	264230	533/KOL/2008	17/03/2008	30/03/2007	A COMPACT EIGHT SPEED AUTOMATIC TRANSMISSION	GM GLOBAL TECHNOLOGY OPERATIONS, INC.	10/10/2008	KOLKATA
11	264231	988/KOL/2006	27/09/2006	21/11/2005	INTAKE MANIFOLD PRESSURE CONTROL APPARATUS AND METHOD FOR A HYBRID PROPULSION SYSTEM	GM GLOBAL TECHNOLOGY OPERATIONS INC	29/06/2007	KOLKATA
12	264232	3360/KOLNP/2007	04/04/2006	05/04/2005	HYDROGENATION OF ESTERS WITH RU/TETRADENTATE LIGANDS COMPLEXES	FIRMENICH SA	13/06/2008	KOLKATA
13	264233	1225/KOL/2007	31/08/2007	03/10/2006	A CONTROL SYSTEM FOR PARTICULATE FILTERS FOR ESTIMATING A CLEAN PRESSURE AND LEVEL OF SOOT	GM GLOBAL TECHNOLOGY OPERATIONS, INC.	25/04/2008	KOLKATA
14	264243	283/KOL/2010	11/04/2005		A THERAPEUTIC COMPOSITION FOR TOPICAL APPLICATION TO FACILITATE HEALING OF WOUNDS AND PROCESS FOR PREPARING THE SAME	SHOMENATH ROY CHOWDHURY	27/08/2010	KOLKATA
15	264251	5004/KOLNP/2007	26/06/2006	24/06/2005	METHOD FOR PRODUCING BONDED MINERAL WOOL AND BINDER THEREFOR	SAINT-GOBAIN ISOVER	27/06/2008	KOLKATA
16	264253	68/KOL/2009	13/01/2009	15/01/2008	A FUEL CELL SYSTEM AND METHOD TO START-UP A FUEL STACK IN A FUEL CELL SYSTEM	GM GLOBAL TECHNOLOGY OPERATIONS, INC.	31/07/2009	KOLKATA
17	264257	241/KOL/2009	11/02/2009 16:23:24	19/03/2008	INTAKE AIR TEMPERATURE SENSOR DIAGNOSTIC SYSTEM AND METHOD	GM GLOBAL TECHNOLOGY OPERATIONS, INC.	25/09/2009	KOLKATA
18	264262	4548/KOLNP/2008	12/04/2007	13/04/2006	AQUEOUS HYDROGEN PEROXIDE-CONTIANING COMPOSITION AND ITS USE FOR CLEANING SURFACES	AKZO NOBEL N. V.	13/03/2009	KOLKATA
19	264263	2891/KOLNP/2007	01/02/2006	14/02/2005	APPARATUS AND METHOD FOR TRANSMITTING INFORMATION FOR MBMS	LG ELECTRONICS INC.	07/09/2007	KOLKATA

20	264267	4500/KOLNP/2008	08/05/2007	08/05/2006	RETRANSMISSION APPARATUS AND MEHOD FOR HIGH-SPEED TATA PROCESSING	SAMSUNG ELECTRONICS CO., LTD.	13/03/2009	KOLKATA
21	264268	336/KOLNP/2008	21/07/2006	26/07/2005	HYDROPHOBIC COATING COMPRISING A PRIMING INCLUDING A BIS-SILANE AND A HYDROPHOBIC LAYER INCLUDING A FLUORINATED ALKYLSILANE	SAINT-GOBAIN GLASS FRANCE	26/09/2008	KOLKATA
22	264274	4179/KOLNP/2008	29/03/2007	07/04/2006	HERBICIDAL MIXTURE, COMPRISING AN IMIDAZOLINONE HERBICIDE AND AN ADJUVANT	BASF SE	06/03/2009	KOLKATA
23	264275	3190/KOLNP/2006	30/05/2005	28/05/2004	USE OF POLYETHERESTERS FOR ROTOMOLDING.	TOTAL PETROCHEMICALS RESEARCH FELUY	08/06/2007	KOLKATA
24	264277	1568/KOLNP/2007	02/11/2005	03/11/2004	GAMMA-UNDECENOLACTONES AND PROCESS OF MAKING THE SAME	V. MANE FILS	27/07/2007	KOLKATA

CONTINUED TO PART-4

CONTINUED FROM PART- 3

INTRODUCTION

In view of the recent amendment made in the Designs (Amendment) Rules, 2008 with effect from 17/06/2008, Publication of the matter relating to Designs is being published in the Official Journal of The Patent Office. This Journal is being published on weekly basis on every Friday covering the various proceedings on Designs as required according to the provisions of under Rule 22, 25, 27 and 39 of the Design (Amendment) Rules, 2008. All the enquiries on this Official Journal and other information as required by the public should be addressed to the Controller General of Patents, Designs & Trade Marks. Suggestions and comments are requested from all quarters so that the content can be enriched.

THE DESIGNS ACT 2000
(SECTION 30)
DESIGN ASSIGNMENT

(01)

The Design stands in the name of QUADRIFOGLIO SISTEMI D'ARREDO S.P.A. registered under the Designs Act, 2000 has been assigned in the Register of Designs in the name as follows:-

Design No.	Class	Name
259225	06-01	OFFISIT S.R.L., OF VIA CORNARE, 12, 31040 MANSUE. FRAZIONE BASALGHELLE (TREVISO)-ITALY, AN ITALIAN JOINT STOCK COMPANY

(02)

The Design stands in the name of MIKAEL NILSSON registered under the Designs Act, 2000 has been assigned in the Register of Designs in the name as follows:-

Design No.	Class	Name
251225	09-99	DEVPAT AB., A SWEDISH JOINT STOCK COMPANY WITH ITS OFFICES AT FREJAGATAN 13A, S-723 35 VASTERAS, SWEDEN

CANCELLATION PROCEEDINGS
under Section 19 of the Designs Act, 2000

(01)

"The Asstt. Controller of Patents & Designs passed an order on 10/12/2014 to cancel the registration of registered Design No. 222799 **dated 7/5/2009 under class 09-01 titled as 'Bottle Cap' in the name of Anuradha Doval of A-504, C-58/20, P.M.O., Co-operative Housing Society, Sector-62, Noida-201301 (U.P.) India, Indian national"**

(02)

"The Ld. Asstt. Controller of Patents & Designs passed an order on 11/12/2014 to dismiss the petition filed M/s. Escorts Construction Equipment Ltd. of Plot No.219, Sector 58, Ballabhgarh, Dist. Faridabad, Haryana, India on 22/4/2010 for cancellation of registration of registered Design No. 200009 **dated 20th June 2005 under Class 12-16 titled as "Diesel tank of a Backhoe Loader" in the name of JCB India Limited, an Indian company having its registered office at B-1/1-1, 2nd Floor, Mohan Co-operative Industrial Estate, Mathura Road, New Delhi, India and works at 23/7, Mathura Road, Ballabgarh, Haryana, India."**

(03)

"The Ld. Asstt. Controller of Patents & Designs passed an order on 11/12/2014 to dismiss the petition filed M/s. Escorts Construction Equipment Ltd. of Plot No.219, Sector 58, Ballabhgarh, Dist. Faridabad, Haryana, India on 22/4/2010 for cancellation of registration of registered Design No. 200010 **dated 20th June 2005 under Class 12-16 titled as "Cabin Exterior of a Backhoe Loader" in the name of JCB India Limited, an Indian company having its registered office at B-1/1-1, 2nd Floor, Mohan Co-operative Industrial Estate, Mathura Road, New Delhi, India and works at 23/7, Mathura Road, Ballabgarh, Haryana, India."**

(04)

"The Ld. Asstt. Controller of Patents & Designs passed an order on 11/12/2014 to dismiss the petition filed M/s. Escorts Construction Equipment Ltd. of Plot No.219, Sector 58, Ballabhgarh, Dist. Faridabad, Haryana, India on 22/4/2010 for cancellation of registration of registered Design No. 200011 **dated 20th June 2005 under Class 06-01 titled as "Seat of a Backhoe Loader" in the name of JCB India Limited, an Indian company having its registered office at B-1/1-1, 2nd Floor, Mohan Co-operative Industrial Estate, Mathura Road, New Delhi, India and works at 23/7, Mathura Road, Ballabgarh, Haryana, India."**

(05)

"The Ld. Asstt. Controller of Patents & Designs passed an order on 11/12/2014 to dismiss the petition filed M/s. Escorts Construction Equipment Ltd. of Plot No.219, Sector 58, Ballabhgarh, Dist. Faridabad, Haryana, India on 22/4/2010 for cancellation of registration of registered Design No. 200012 **dated 20th June 2005 under Class 12-16 titled as "Excavator control lever of a Backhoe Loader" in the name of JCB India Limited, an Indian company having its registered office at B-1/1-1, 2nd Floor, Mohan Co-operative Industrial Estate, Mathura Road, New Delhi, India and works at 23/7, Mathura Road, Ballabgarh, Haryana, India."**

(06)

"The Ld. Asstt. Controller of Patents & Designs passed an order on 12/12/2014 to dismiss the petition filed M/s. Asian Rubber Industries, an Indian partnership firm, of 69, Najafgarh Road, New Delhi - 110015 on 24/1/2012 for cancellation of registration of registered Design No. 181088 **dated 15th December 1999 under Class 10 titled as 'Footwear' in the name of Josco Rubbers, of 8/50 Moonalingal, Calicut 673032, State of Kerala, India, an Indian partnership firm of which the partners are Jose Joseph, Maxy Joseph, Abey Joseph and Sonia Ton, all Indian national and all of the above address.."**

COPYRIGHT PUBLICATION

SL NO	REGISTERED DESIGN NUMBERS	RENEWED ON
1.	196932	02.12.2014
2.	198352	27.11.2014
3.	198956	28.11.2014
4.	198955	28.11.2014
5.	196930	02.12.2014
6.	196931	02.12.2014
7.	196923	02.12.2014
8.	196924	02.12.2014
9.	196925	02.12.2014
10.	196926	02.12.2014
11.	196927	02.12.2014
12.	196928	02.12.2014
13.	196929	02.12.2014
14.	198953	28.11.2014
15.	198954	28.11.2014
16.	200814	12.12.2014
17.	200813	12.12.2014
18.	198670	28.11.2014
19.	198669	28.11.2014
20.	198668	28.11.2014
21.	198667	28.11.2014
22.	198353	27.11.2014
23.	204706	12.12.2014
24.	209743	12.12.2014
25.	206223	12.12.2014
26.	206224	12.12.2014
27.	206225	12.12.2014
28.	206226	12.12.2014
29.	206227	12.12.2014
30.	206228	12.12.2014
31.	206229	12.12.2014
32.	206230	12.12.2014
33.	206235	12.12.2014
34.	232816	04.09.2014
35.	230056	04.09.2014
36.	229671	04.09.2014
37.	251691	04.09.2014
38.	239040	10.09.2014
39.	237666	10.09.2014
40.	239041	10.09.2014
41.	234496	10.09.2014
42.	250802	10.09.2014
43.	196909	15.09.2014
44.	224823	15.09.2014
45.	193675	15.09.2014
46.	239038	16.09.2014
47.	237962	16.09.2014
48.	237963	16.09.2014
49.	237984	16.09.2014

50.	**233317**	**16.09.2014**
51.	**240861**	**16.09.2014**
52.	**233316**	**23.09.2014**
53.	**197670**	**23.09.2014**
54.	**209058**	**23.09.2014**
55.	**233256**	**25.09.2014**
56.	**241647**	**25.09.2014**
57.	**239039**	**26.09.2014**
58.	**185720**	**26.09.2014**
59.	**252753**	**26.09.2014**
60.	**197739**	**21.10.2014**
61.	**197741**	**21.10.2014**
62.	**197742**	**21.10.2014**
63.	**197744**	**21.10.2014**
64.	**192740**	**21.10.2014**
65.	**196132**	**21.10.2014**
66.	**196135**	**21.10.2014**
67.	**196133**	**21.10.2014**
68.	**196134**	**21.10.2014**
69.	**192736**	**21.10.2014**
70.	**192738**	**21.10.2014**
71.	**192739**	**21.10.2014**
72.	**199452**	**27.10.2014**
73.	**254371**	**30.10.2014**
74.	**254372**	**30.10.2014**
75.	**254373**	**30.10.2014**
76.	**254374**	**30.10.2014**

REGISTRATION OF DESIGNS

The following designs have been registered. They are now open for public inspection. In the following each entry the Date of Registration is shown. The Priority Number, Priority Date and Priority Country are also shown

DESIGN NUMBER	260257
CLASS	08-01
1)HILTI AKTIENGESELLSCHAFT, FELDKIRCHERSTRASSE 100, FL-9494 SCHAAN, LIECHTENSTEIN, NATIONALITY: LIECHTENSTEIN	
DATE OF REGISTRATION	10/02/2014
TITLE	CORE BIT
PRIORITY	

PRIORITY NUMBER	DATE	COUNTRY
756199601	09/08/2013	WIPO

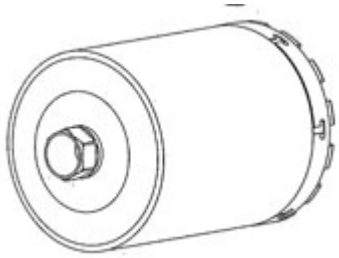

DESIGN NUMBER	260815
CLASS	28-03
1)DYSON TECHNOLOGY LIMITED, A COMPANY INCORPORATED UNDER THE LAWS OF THE UNITED KINGSDOM, OF TETBURY HILL, MALMESBURY, WILTSHIRE, SN16 0RP, UNITED KINGDOM	
DATE OF REGISTRATION	06/03/2014
TITLE	HAIR DRYER
PRIORITY	

PRIORITY NUMBER	DATE	COUNTRY
001384796-0003	26/09/2013	OHIM

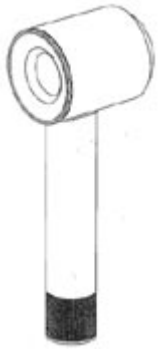

DESIGN NUMBER	259703
CLASS	12-16
1)HERO MOTOCORP LIMITED, AN INDIAN COMPANY INCORPORATED UNDER THE COMPANIES ACT, HAVING ITS OFFICE AT 34, COMMUNITY CENTRE, BASANT LOK, VASANT VIHAR, NEW DELHI-110 057	
DATE OF REGISTRATION	27/01/2014
TITLE	VISOR
PRIORITY NA	

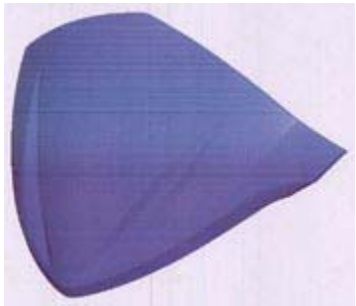

DESIGN NUMBER	262221
CLASS	05-05
1)M/S. BIBA APPARELS PRIVATE LIMITED, AN INDIAN PRIVATE LIMITED COMPANY INCORPORATED UNDER THE PROVISION OF THE COMPANIES ACT, 1956, AND HAVING ITS'S REGISTERED OFFICE AT RELIABLE HOUSE, SITUATED AT HANUMAN SILK MILL COMPOUND, KANJURMARG (WEST), OPP. HUMA MALL, MUMBAI-400 078 MAHARASHTRA, INDIA.	
DATE OF REGISTRATION	01/05/2014
TITLE	TEXTILE FABRIC
PRIORITY NA	

DESIGN NUMBER	262255
CLASS	05-05
1)M/S. BIBA APPARELS PRIVATE LIMITED, AN INDIAN PRIVATE LIMITED COMPANY INCORPORATED UNDER THE PROVISION OF THE COMPANIES ACT, 1956, AND HAVING ITS'S REGISTERED OFFICE AT RELIABLE HOUSE, SITUATED AT HANUMAN SILK MILL COMPOUND, KANJURMARG (WEST), OPP. HUMA MALL, MUMBAI-400 078 MAHARASHTRA, INDIA.	
DATE OF REGISTRATION	01/05/2014
TITLE	TEXTILE FABRIC
PRIORITY NA	

DESIGN NUMBER	261624
CLASS	06-04
1)WIM PLAST LIMITED, A PUBLIC LIMITED COMPANY REGISTERED UNDER THE PROVISION OF INDIAN COMPANIES ACT, 1956, HAVING OFFICE ADDRESS AT 5 CORPORATE AVENUE, 'B' WING, CELLO HOUSE, SONAWALA ROAD, GOREGAON (EAST), MUMBAI-400063, MAHARASHTRA, INDIA	
DATE OF REGISTRATION	09/04/2014
TITLE	DRAWER
PRIORITY NA	

DESIGN NUMBER	260073	
CLASS	13-03	
1)AJANTA PRIVATE LIMITED, AN INDIAN COMPANY OF ORPAT INDUSTRIAL ESTATE, RAJKOT-MORBI HIGHWAY, MORBI 363641, STATE OF GUJARAT, INDIA		
DATE OF REGISTRATION	03/02/2014	
TITLE	MODULE CASE COVER FOR SWITCH	
PRIORITY NA		
DESIGN NUMBER	261276	
CLASS	15-03	
1)NATIONAL AGRO INDUSTRIES, LINK ROAD, INDUSTRIAL AREA-A, OPP. TRANSPORT NAGAR, LUDHIANA-141003 AN INDIAN PARTNERSHIP FIRM WHOSE PARTNERS ARE:- MANMOHAN SINGH, SUKH SOHAN SINGH, TEJDEEP SINGH, HARDEEP SINGH & GURPREET SINGH BEING INDIAN NATIONALS		
DATE OF REGISTRATION	27/03/2014	
TITLE	SEED METERING DISC FOR MULTICROP PLANTING MACHINE	
PRIORITY NA		
DESIGN NUMBER	260274	
CLASS	13-03	
1)CPL ELECTRICALS (INDIA) PRIVATE LIMITED, A COMPANY INCORPORATED UNDER THE INDIAN COMPANIES ACT, 1956, HAVING ITS REGISTERED OFFICE AT 3, MADHUBAN INDUSTRIAL ESTATE, OFF MAHAKALI CAVES ROAD, ANDHERI (EAST), MUMBAI-400093, STATE OF MAHARASHTRA, INDIA, OF ABOVE ADDRESS		
DATE OF REGISTRATION	11/02/2014	
TITLE	SWITCH BOARD	
PRIORITY NA		

DESIGN NUMBER	262224	
CLASS	05-05	
1)M/S. BIBA APPARELS PRIVATE LIMITED, AN INDIAN PRIVATE LIMITED COMPANY INCORPORATED UNDER THE PROVISION OF THE COMPANIES ACT, 1956, AND HAVING ITS'S REGISTERED OFFICE AT RELIABLE HOUSE, SITUATED AT HANUMAN SILK MILL COMPOUND, KANJURMARG (WEST), OPP. HUMA MALL, MUMBAI-400 078 MAHARASHTRA, INDIA.		
DATE OF REGISTRATION	01/05/2014	
TITLE	TEXTILE FABRIC	
PRIORITY NA		
DESIGN NUMBER	262258	
CLASS	05-05	
1)M/S. BIBA APPARELS PRIVATE LIMITED, AN INDIAN PRIVATE LIMITED COMPANY INCORPORATED UNDER THE PROVISION OF THE COMPANIES ACT, 1956, AND HAVING ITS'S REGISTERED OFFICE AT RELIABLE HOUSE, SITUATED AT HANUMAN SILK MILL COMPOUND, KANJURMARG (WEST), OPP. HUMA MALL, MUMBAI-400 078 MAHARASHTRA, INDIA.		
DATE OF REGISTRATION	01/05/2014	
TITLE	TEXTILE FABRIC	
PRIORITY NA		
DESIGN NUMBER	260078	
CLASS	13-03	
1)AJANTA PRIVATE LIMITED, AN INDIAN COMPANY OF ORPAT INDUSTRIAL ESTATE, RAJKOT-MORBI HIGHWAY, MORBI 363641, STATE OF GUJARAT, INDIA		
DATE OF REGISTRATION	03/02/2014	
TITLE	MODULE BOTTOM COVER FOR SWITCH	
PRIORITY NA		

DESIGN NUMBER	258705
CLASS	15-99

1)SANDVIK INTELLECTUAL PROPERTY AB OF
SE-811 81 SANDVIKEN, SWEDEN, A SWEDISH COMPANY

DATE OF REGISTRATION	12/12/2013
TITLE	JAW PLATE AND HOOK FOR CRUSHER

PRIORITY

PRIORITY NUMBER	DATE	COUNTRY
001376263	02/07/2013	OHIM

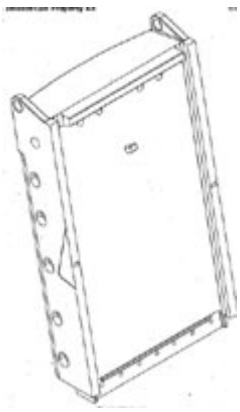

DESIGN NUMBER	256384
CLASS	03-01

1)DYNO, LLC, HAVING NATIONALITY OF UNITED STATES OF THE ADDRESS
1571 W. COPANS ROAD, SUITE 105, POMPANO BEACH, FLORIDA 33064

DATE OF REGISTRATION	12/09/2013
TITLE	RIBBON DISPENSER

PRIORITY

PRIORITY NUMBER	DATE	COUNTRY
29/449,638	15/03/2013	U.S.A.

DESIGN NUMBER	260256
CLASS	08-01

1)HILTI AKTIENGESELLSCHAFT,
FELDKIRCHERSTRASSE 100, FL-9494 SCHAAN, LIECHTENSTEIN, NATIONALITY: LIECHTENSTEIN

DATE OF REGISTRATION	10/02/2014
TITLE	CORE BIT

PRIORITY

PRIORITY NUMBER	DATE	COUNTRY
756199601	09/08/2013	WIPO

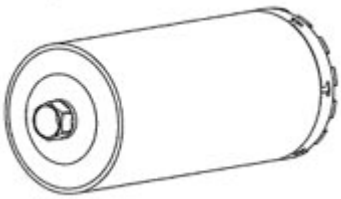

DESIGN NUMBER	261862
CLASS	28-03
1)THE GILLETTE COMPANY, A COMPANY INCORPORATED UNDER THE LAWS OF UNITED STATES OF AMERICA HAVING ITS OFFICE AT IP/LEGAL PATENT DEPARTMENT - 3E, ONE GILLETTE PARK, BOSTON, MASSACHUSETTS 02127, UNITED STATES OF AMERICA	
DATE OF REGISTRATION	21/04/2014
TITLE	RAZOR CARTRIDGE

PRIORITY

PRIORITY NUMBER	DATE	COUNTRY
29/472583	13/11/2013	U.S.A.

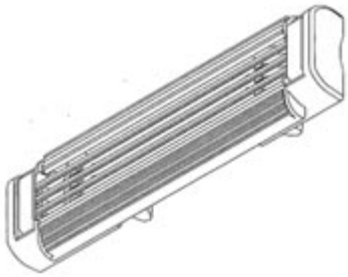

DESIGN NUMBER	263311
CLASS	12-15
1)METRO TYRES LIMITED, A COMPANY INCORPORATED UNDER THE INDIAN COMPANIES ACT, 1956 NATIONALITY: INDIAN COMPANY, C-49, SECTOR-62, NOIDA-201301, U.P.	
DATE OF REGISTRATION	13/06/2014
TITLE	TYRE

PRIORITY NA

DESIGN NUMBER	262752
CLASS	15-01
1)TRIVENI TURBINE LIMITED, AN INDIAN COMPANY HAVING ITS PLACE OF BUSINESS AT 12A, PEENYA INDUSTRIAL AREA, BANGLORE-560058	
DATE OF REGISTRATION	21/05/2014
TITLE	BACK PEDESTAL OF A STEAM TURBINE

PRIORITY NA

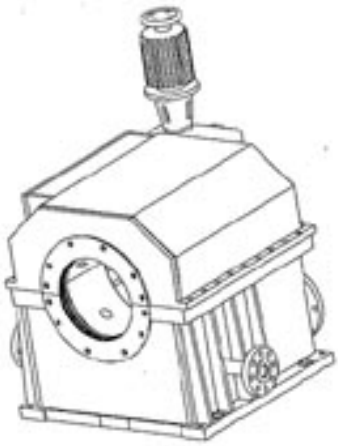

DESIGN NUMBER	259701	
CLASS	12-16	
1)HERO MOTOCORP LIMITED, AN INDIAN COMPANY INCORPORATED UNDER THE COMPANIES ACT, HAVING ITS OFFICE AT 34, COMMUNITY CENTRE, BASANT LOK, VASANT VIHAR, NEW DELHI-110 057		
DATE OF REGISTRATION	27/01/2014	
TITLE	FAIRING FOR A TWO WHEELED VEHICLE	
PRIORITY NA		
DESIGN NUMBER	262220	
CLASS	05-05	
1)M/S. BIBA APPARELS PRIVATE LIMITED, AN INDIAN PRIVATE LIMITED COMPANY INCORPORATED UNDER THE PROVISION OF THE COMPANIES ACT, 1956, AND HAVING ITS'S REGISTERED OFFICE AT RELIABLE HOUSE, SITUATED AT HANUMAN SILK MILL COMPOUND, KANJURMARG (WEST), OPP. HUMA MALL, MUMBAI-400 078 MAHARASHTRA, INDIA.		
DATE OF REGISTRATION	01/05/2014	
TITLE	TEXTILE FABRIC	
PRIORITY NA		
DESIGN NUMBER	262254	
CLASS	05-05	
1)M/S. BIBA APPARELS PRIVATE LIMITED, AN INDIAN PRIVATE LIMITED COMPANY INCORPORATED UNDER THE PROVISION OF THE COMPANIES ACT, 1956, AND HAVING ITS'S REGISTERED OFFICE AT RELIABLE HOUSE, SITUATED AT HANUMAN SILK MILL COMPOUND, KANJURMARG (WEST), OPP. HUMA MALL, MUMBAI-400 078 MAHARASHTRA, INDIA.		
DATE OF REGISTRATION	01/05/2014	
TITLE	TEXTILE FABRIC	
PRIORITY NA		

DESIGN NUMBER	260072
CLASS	13-03
1)AJANTA PRIVATE LIMITED, AN INDIAN COMPANY OF ORPAT INDUSTRIAL ESTATE, RAJKOT-MORBI HIGHWAY, MORBI 363641, STATE OF GUJARAT, INDIA	
DATE OF REGISTRATION	03/02/2014
TITLE	MODULE BOTTOM COVER FOR SWITCH
PRIORITY NA	

DESIGN NUMBER	262140
CLASS	24-01
1)SIEMENS AKTIENGESELLSCHAFT, OF WITTELSBACHERPLATZ 2, 80333 MUNCHEN, GERMANY, A GERMAN COMPANY	
DATE OF REGISTRATION	29/04/2014
TITLE	PATIENT TABLE

PRIORITY

PRIORITY NUMBER	DATE	COUNTRY
EU 001389563	13/11/2013	OHIM

DESIGN NUMBER	259838
CLASS	16-02
1)MR. RANJITSINH MAHADEO DISALE AN INDIAN NATIONAL WHOSE ADDRESS IS 618, ALIPUR ROAD, SHIVAJINAGAR, VANKALAS PLOT, BARSHI 413411, MAHARASHTRA, INDIA	
DATE OF REGISTRATION	29/01/2014
TITLE	PROJECTOR FOR TEACHING
PRIORITY NA	

DESIGN NUMBER	262223
CLASS	05-05
1)M/S. BIBA APPARELS PRIVATE LIMITED, AN INDIAN PRIVATE LIMITED COMPANY INCORPORATED UNDER THE PROVISION OF THE COMPANIES ACT, 1956, AND HAVING ITS'S REGISTERED OFFICE AT RELIABLE HOUSE, SITUATED AT HANUMAN SILK MILL COMPOUND, KANJURMARG (WEST), OPP. HUMA MALL, MUMBAI-400078 MAHARASHTRA, INDIA	
DATE OF REGISTRATION	01/05/2014
TITLE	TEXTILE FABRIC
PRIORITY NA	

DESIGN NUMBER	262257
CLASS	05-05
1)M/S. BIBA APPARELS PRIVATE LIMITED, AN INDIAN PRIVATE LIMITED COMPANY INCORPORATED UNDER THE PROVISION OF THE COMPANIES ACT, 1956, AND HAVING ITS'S REGISTERED OFFICE AT RELIABLE HOUSE, SITUATED AT HANUMAN SILK MILL COMPOUND, KANJURMARG (WEST), OPP. HUMA MALL, MUMBAI-400 078 MAHARASHTRA, INDIA.	
DATE OF REGISTRATION	01/05/2014
TITLE	TEXTILE FABRIC
PRIORITY NA	

DESIGN NUMBER	260076
CLASS	13-03
1)AJANTA PRIVATE LIMITED, AN INDIAN COMPANY OF ORPAT INDUSTRIAL ESTATE, RAJKOT-MORBI HIGHWAY, MORBI 363641, STATE OF GUJARAT, INDIA	
DATE OF REGISTRATION	03/02/2014
TITLE	MODULE CASE FOR SWITCH
PRIORITY NA	

DESIGN NUMBER	261954
CLASS	15-04

1)JC BAMFORD EXCAVATORS LIMITED, A BRITISH COMPANY, OF
LAKESIDE WORKS, ROCESTER, UTTOXETER, STAFFORDSHIRE ST14 5JP, UNITED KINGDOM

DATE OF REGISTRATION	23/04/2014
TITLE	EXCAVATOR

PRIORITY

PRIORITY NUMBER	DATE	COUNTRY
001388086	24/10/2013	OHIM

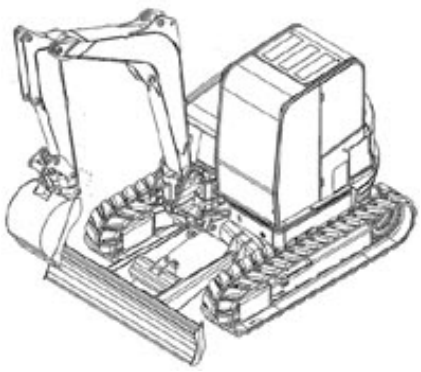

DESIGN NUMBER	263295
CLASS	13-03

1)LEGRAND FRANCE 128 AVENUE DU MARÉCHAL DE LATTRE-DE-TASSIGNY, 87000 LIMOGES - FRANCE, A FRENCH COMPANY AND
LEGRAND SNC, 128 AVENUE DU MARÉCHAL DE LATTRE DE TASSIGNY, 87000 LIMOGES - FRANCE, A GENERAL PARTNERSHIP FRENCH COMPANY

DATE OF REGISTRATION	12/06/2014
TITLE	COVER PLATE FOR ELECTRIC APPARATUS

PRIORITY NA

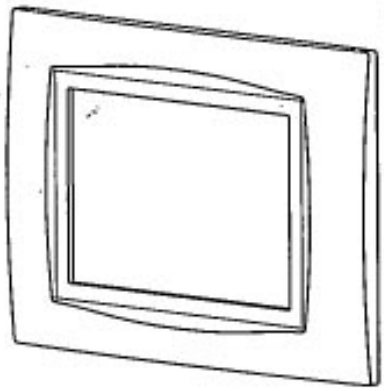

DESIGN NUMBER	262219
CLASS	05-05

1)M/S. BIBA APPARELS PRIVATE LIMITED, AN INDIAN PRIVATE LIMITED COMPANY INCORPORATED UNDER THE PROVISION OF THE COMPANIES ACT, 1956, AND HAVING ITS'S REGISTERED OFFICE AT
RELIABLE HOUSE, SITUATED AT HANUMAN SILK MILL COMPOUND, KANJURMARG (WEST), OPP. HUMA MALL, MUMBAI-400 078 MAHARASHTRA, INDIA.

DATE OF REGISTRATION	01/05/2014
TITLE	TEXTILE FABRIC

PRIORITY NA

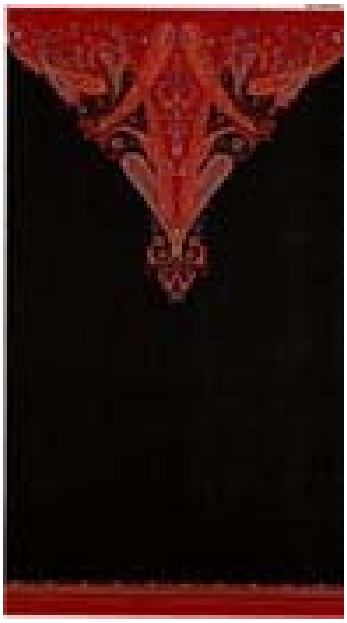

DESIGN NUMBER	262253
CLASS	05-05
1)M/S. BIBA APPARELS PRIVATE LIMITED, AN INDIAN PRIVATE LIMITED COMPANY INCORPORATED UNDER THE PROVISION OF THE COMPANIES ACT, 1956, AND HAVING ITS'S REGISTERED OFFICE AT RELIABLE HOUSE, SITUATED AT HANUMAN SILK MILL COMPOUND, KANJURMARG (WEST), OPP. HUMA MALL, MUMBAI-400 078 MAHARASHTRA, INDIA.	
DATE OF REGISTRATION	01/05/2014
TITLE	TEXTILE FABRIC
PRIORITY NA	

DESIGN NUMBER	262482
CLASS	19-06
1)FLAIR WRITING INSTRUMENTS, AN INDIAN PARTNERSHIP FIRM OF 63, B/C, GOVT. INDUSTRIAL ESTATE, CHARKOP, KANDIVALI (W), MUMBAI-400067, [MAHARASHTRA], INDIA; WHOSE PARTNERS ARE KHUBILAL J. RATHOD, MANJULA V. RATHOD AND MOHIT RATHOD; ALL INDIANS OF THE ABOVE ADDRESS	
DATE OF REGISTRATION	09/05/2014
TITLE	PEN
PRIORITY NA	

DESIGN NUMBER	261621
CLASS	06-01
1)WIM PLAST LIMITED, A PUBLIC LIMITED COMPANY REGISTERED UNDER THE PROVISION OF INDIAN COMPANIES ACT, 1956, HAVING OFFICE ADDRESS AT 5 CORPORATE AVENUE, 'B' WING, CELLO HOUSE, SONAWALA ROAD, GOREGAON (EAST), MUMBAI-400063, MAHARASHTRA, INDIA	
DATE OF REGISTRATION	09/04/2014
TITLE	CHAIR
PRIORITY NA	

DESIGN NUMBER	263600
CLASS	02-04
1)SHRI KHATU SHYAM POLYTEXURE LLP, T-5/250, MANGOLPURI INDUSTRIAL AREA, PHASE-1, DELHI-110083, INDIA. (AN INDIAN PARTNERSHIP FIRM WHOSE PARTNERS ARE:- NAVEEN GOEL, SHALIESH GOEL, SMT. SANTOSH BINDAL & TRIPTA BINDAL. AN INDIAN NATIONAL OF THE ABOVE ADDRESS	
DATE OF REGISTRATION	23/06/2014
TITLE	FOOTWEAR
PRIORITY NA	

DESIGN NUMBER	262139
CLASS	12-08
1)BAYERISCHE MOTOREN WERKE AKTIENGESELLSCHAFT, OF PETUELRING 130, 80809, MUENCHEN, GERMANY, A GERMAN COMPANY	
DATE OF REGISTRATION	29/04/2014
TITLE	CAR

PRIORITY

PRIORITY NUMBER	DATE	COUNTRY
DE 402013101079.7	31/10/2013	GERMANY

DESIGN NUMBER	260816
CLASS	28-03
1)DYSON TECHNOLOGY LIMITED, A COMPANY INCORPORATED UNDER THE LAWS OF THE UNITED KINGSDOM, OF TETBURY HILL, MALMESBURY, WILTSHIRE, SN16 0RP, UNITED KINGDOM	
DATE OF REGISTRATION	06/03/2014
TITLE	HAIR DRYER

PRIORITY

PRIORITY NUMBER	DATE	COUNTRY
001384796-0001	26/09/2013	OHIM

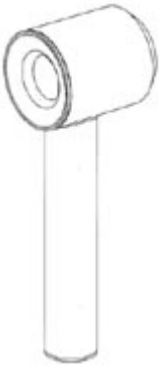

DESIGN NUMBER	262222	
CLASS	05-05	
1)M/S. BIBA APPARELS PRIVATE LIMITED, AN INDIAN PRIVATE LIMITED COMPANY INCORPORATED UNDER THE PROVISION OF THE COMPANIES ACT, 1956, AND HAVING ITS'S REGISTERED OFFICE AT RELIABLE HOUSE, SITUATED AT HANUMAN SILK MILL COMPOUND, KANJURMARG (WEST), OPP. HUMA MALL, MUMBAI-400 078 MAHARASHTRA, INDIA.		
DATE OF REGISTRATION	01/05/2014	
TITLE	TEXTILE FABRIC	
PRIORITY NA		
DESIGN NUMBER	262256	
CLASS	05-05	
1)M/S. BIBA APPARELS PRIVATE LIMITED, AN INDIAN PRIVATE LIMITED COMPANY INCORPORATED UNDER THE PROVISION OF THE COMPANIES ACT, 1956, AND HAVING ITS'S REGISTERED OFFICE AT RELIABLE HOUSE, SITUATED AT HANUMAN SILK MILL COMPOUND, KANJURMARG (WEST), OPP. HUMA MALL, MUMBAI-400 078 MAHARASHTRA, INDIA.		
DATE OF REGISTRATION	01/05/2014	
TITLE	TEXTILE FABRIC	
PRIORITY NA		
DESIGN NUMBER	261462	
CLASS	09-02	
1)MAPCO CORPORATION., (AN INDIAN SOLE PROPRIETORSHIP CONCERN), HAVING OFFICE AT 39-C, MAHADEV INDUSTRIAL ESTATE, SURVEY NO. 3, HISSA NO. 1, GOTE GHAR MUMBRA PANVEL HIGHWAY, DAHISAR, NEW MUMBAI. MAHARASHTRA, INDIA. WHOSE PROPRIETOR IS MOHAMMAD HAMID KHAN. (INDIAN NATIONAL) OF ABOVE ADDRESS		
DATE OF REGISTRATION	02/04/2014	
TITLE	CONTAINER	
PRIORITY NA		

DESIGN NUMBER	260075
CLASS	13-03
1)AJANTA PRIVATE LIMITED, AN INDIAN COMPANY OF ORPAT INDUSTRIAL ESTATE, RAJKOT-MORBI HIGHWAY, MORBI 363641, STATE OF GUJARAT, INDIA	
DATE OF REGISTRATION	03/02/2014
TITLE	MODULE BOTTOM COVER FOR SWITCH
PRIORITY NA	

DESIGN NUMBER	262973
CLASS	07-01
1)ASHISH ARORA (H.U.F.) AN INDIAN PROPRIETOR FIRM AT OZZO HOUSEWARE, 53/B/102, SILVER INDUSTRIAL ESTATE, PATALIYA ROAD, BHIMPORE, NANI DAMAN, DAMAN (U.T.) (INDIA) OF ABOVE ADDRESS	
DATE OF REGISTRATION	29/05/2014
TITLE	JUG
PRIORITY NA	

DESIGN NUMBER	259011
CLASS	13-03
1)LARSEN & TOUBRO LIMITED, AN INDIAN COMPANY INCORPORATED UNDER THE COMPANIES ACT, 1956 OF L & T HOUSE, BALLARD ESTATE, MUMBAI 400001, STATE OF MAHARASHTRA, INDIA	
DATE OF REGISTRATION	26/12/2013
TITLE	ENCLOSURE FOR RELAY
PRIORITY NA	

DESIGN NUMBER	260688	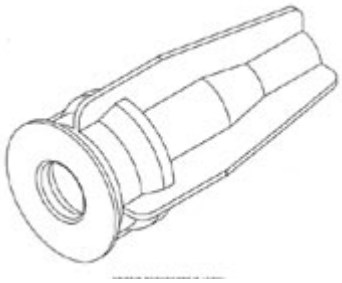
CLASS	13-03	
1)ANDREW LLC, OF 1100 COMMSCOPE PLACE, SE HICKORY, NORTH CAROLINA 28602; UNITED STATES OF AMERICA, NATIONALITY: USA		
DATE OF REGISTRATION	28/02/2014	
TITLE	ELECTRICAL INTERCONNECTION SEAL	
PRIORITY		

PRIORITY NUMBER	DATE	COUNTRY
29473108	19/11/2013	U.S.A.

DESIGN NUMBER	262225	
CLASS	05-05	
1)M/S. BIBA APPARELS PRIVATE LIMITED, AN INDIAN PRIVATE LIMITED COMPANY INCORPORATED UNDER THE PROVISION OF THE COMPANIES ACT, 1956, AND HAVING ITS'S REGISTERED OFFICE AT RELIABLE HOUSE, SITUATED AT HANUMAN SILK MILL COMPOUND, KANJURMARG (WEST), OPP. HUMA MALL, MUMBAI-400 078 MAHARASHTRA, INDIA.		
DATE OF REGISTRATION	01/05/2014	
TITLE	TEXTILE FABRIC	
PRIORITY NA		

DESIGN NUMBER	262259	
CLASS	05-05	
1)M/S. BIBA APPARELS PRIVATE LIMITED, AN INDIAN PRIVATE LIMITED COMPANY INCORPORATED UNDER THE PROVISION OF THE COMPANIES ACT, 1956, AND HAVING ITS'S REGISTERED OFFICE AT RELIABLE HOUSE, SITUATED AT HANUMAN SILK MILL COMPOUND, KANJURMARG (WEST), OPP. HUMA MALL, MUMBAI-400 078 MAHARASHTRA, INDIA.		
DATE OF REGISTRATION	01/05/2014	
TITLE	TEXTILE FABRIC	
PRIORITY NA		

DESIGN NUMBER	260079
CLASS	13-03
1)AJANTA PRIVATE LIMITED, AN INDIAN COMPANY OF ORPAT INDUSTRIAL ESTATE, RAJKOT-MORBI HIGHWAY, MORBI 363641, STATE OF GUJARAT, INDIA	
DATE OF REGISTRATION	03/02/2014
TITLE	MODULE CASE FOR SWITCH
PRIORITY NA	

DESIGN NUMBER	258706
CLASS	15-99
1)SANDVIK INTELLECTUAL PROPERTY AB OF SE-811 81 SANDVIKEN, SWEDEN, A SWEDISH COMPANY	
DATE OF REGISTRATION	12/12/2013
TITLE	JAW PLATE AND HOOK FOR CRUSHER

PRIORITY

PRIORITY NUMBER	DATE	COUNTRY
001376263	02/07/2013	OHIM

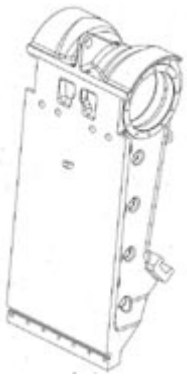

DESIGN NUMBER	263057
CLASS	14-99
1)SAMSUNG ELECTRONICS CO., LTD. 129, SAMSUNG-RO, YEONGTONG-GU, SUWON-SI, GYEONGGI-DO, 443-742, REPUBLIC OF KOREA, A COMPANY OF REPUBLIC OF KOREA	
DATE OF REGISTRATION	02/06/2014
TITLE	STAND FOR TELEVISION

PRIORITY

PRIORITY NUMBER	DATE	COUNTRY
30-2014-0000249	02/01/2014	REPUBLIC OF KOREA

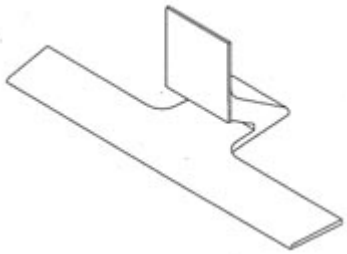

DESIGN NUMBER	262011
CLASS	26-06

1)HONDA MOTOR CO., LTD., A JAPANESE CORPORATION, OF
1-1, MINAMI-AOYAMA 2-CHOME, MINATO-KU, TOKYO, 107-8556 JAPAN

DATE OF REGISTRATION	25/04/2014
TITLE	HEADLIGHT FOR MOTORCYCLE

PRIORITY

PRIORITY NUMBER	DATE	COUNTRY
2013-025274	30/10/2013	JAPAN

DESIGN NUMBER	262147
CLASS	18-02

1)SATO HOLDINGS KABUSHIKI KAISHA, A JAPANESE CORPORATION OF
7-1, SIMOMEGURO 1-CHOME, MEGURO-KU TOKYO 153-0064, JAPAN

DATE OF REGISTRATION	30/04/2014
TITLE	LABEL PRINTER

PRIORITY

PRIORITY NUMBER	DATE	COUNTRY
2013-030359	25/12/2013	JAPAN

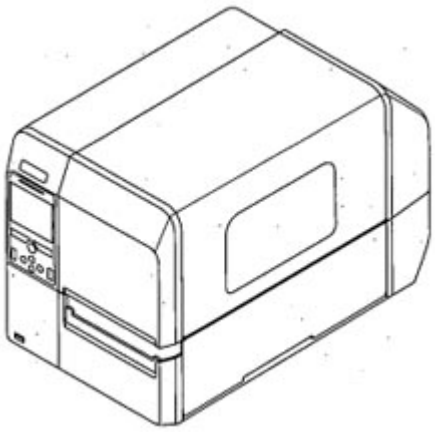

DESIGN NUMBER	259866
CLASS	14-03

1)SAMSUNG ELECTRONICS CO., LTD.
129, SAMSUNG-RO, YEONGTONG-GU, SUWON-SI, GYEONGGI-DO, 443-742, REPUBLIC OF KOREA, A COMPANY OF REPUBLIC OF KOREA

DATE OF REGISTRATION	30/01/2014
TITLE	COMMUNICATION TERMINAL

PRIORITY

PRIORITY NUMBER	DATE	COUNTRY
30-2013-0043819	27/08/2013	REPUBLIC OF KOREA

DESIGN NUMBER	262226
CLASS	05-05

1)M/S. BIBA APPARELS PRIVATE LIMITED, AN INDIAN PRIVATE LIMITED COMPANY INCORPORATED UNDER THE PROVISION OF THE COMPANIES ACT, 1956, AND HAVING ITS'S REGISTERED OFFICE AT
RELIABLE HOUSE, SITUATED AT HANUMAN SILK MILL COMPOUND, KANJURMARG (WEST), OPP. HUMA MALL, MUMBAI-400078 MAHARASHTRA, INDIA

DATE OF REGISTRATION	01/05/2014
TITLE	TEXTILE FABRIC

PRIORITY NA

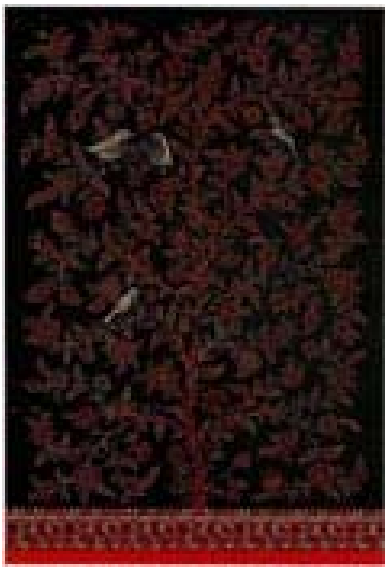

DESIGN NUMBER	260081
CLASS	13-03

1)AJANTA PRIVATE LIMITED, AN INDIAN COMPANY OF
ORPAT INDUSTRIAL ESTATE, RAJKOT-MORBI HIGHWAY, MORBI 363641, STATE OF GUJARAT, INDIA

DATE OF REGISTRATION	03/02/2014
TITLE	MODULE BOTTOM COVER FOR SWITCH

PRIORITY NA

DESIGN NUMBER	258707
CLASS	15-99

1)SANDVIK INTELLECTUAL PROPERTY AB OF
SE-811 81 SANDVIKEN, SWEDEN, A SWEDISH COMPANY

DATE OF REGISTRATION	12/12/2013
TITLE	CRUSHING SHELL FOR CRUSHER

PRIORITY

PRIORITY NUMBER	DATE	COUNTRY
001376073	27/06/2013	OHIM

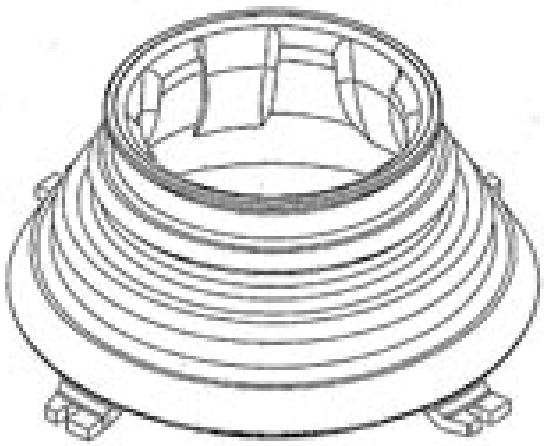

DESIGN NUMBER	261296
CLASS	08-06
1)ANKUSHBHAI MANSUKHBHAI SANGANI., AN INDIAN NATIONAL SOLE PROPRIETOR OF M/S. SUVARNA TECHNOCAST., AN INDIAN PROPRIETORSHIP FIRM., HAVING ITS PRINCIPLE PLACE OF BUSINESS AT, 7, PARSANA SOCIETY, 50 FEET ROAD, RAJKOT, GUJARAT-INDIA	
DATE OF REGISTRATION	27/03/2014
TITLE	HANDLE
PRIORITY NA	

DESIGN NUMBER	262150
CLASS	12-11
1)HONDA MOTOR CO., LTD., A JAPANESE CORPORATION, OF 1-1, MINAMI-AOYAMA 2-CHOME, MINATO-KU, TOKYO, 107-8556 JAPAN	
DATE OF REGISTRATION	30/04/2014
TITLE	MOTORCYCLE

PRIORITY

PRIORITY NUMBER	DATE	COUNTRY
2013-026071	08/11/2013	JAPAN

DESIGN NUMBER	262228
CLASS	05-05
1)M/S. BIBA APPARELS PRIVATE LIMITED, AN INDIAN PRIVATE LIMITED COMPANY INCORPORATED UNDER THE PROVISION OF THE COMPANIES ACT, 1956, AND HAVING ITS'S REGISTERED OFFICE AT RELIABLE HOUSE, SITUATED AT HANUMAN SILK MILL COMPOUND, KANJURMARG (WEST), OPP. HUMA MALL, MUMBAI-400 078 MAHARASHTRA, INDIA.	
DATE OF REGISTRATION	01/05/2014
TITLE	TEXTILE FABRIC
PRIORITY NA	

DESIGN NUMBER	258709
CLASS	15-99
1)SANDVIK INTELLECTUAL PROPERTY AB OF SE-811 81 SANDVIKEN, SWEDEN, A SWEDISH COMPANY	
DATE OF REGISTRATION	12/12/2013
TITLE	CRUSHING SHELL FOR CRUSHER

PRIORITY

PRIORITY NUMBER	DATE	COUNTRY
001376073	27/06/2013	OHIM

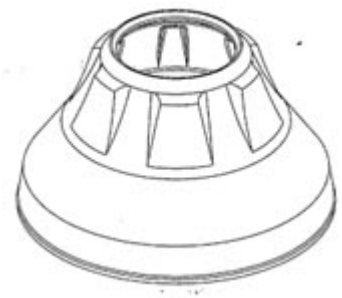

DESIGN NUMBER	259588
CLASS	08-05
1)ETABLISSEMENTS GEORGES RENAULT OF 38 RUE BOBBY SANDS-ZAC DE LA LORIE, 44800 SAINT-HERBLAIN, FRANCE; NATIONALITY: FRANCE	
DATE OF REGISTRATION	23/01/2014
TITLE	IMPACT WRENCH

PRIORITY

PRIORITY NUMBER	DATE	COUNTRY
002286344-0001	02/08/2013	OHIM

DESIGN NUMBER	262988
CLASS	06-01
1)THE SUPREME INDUSTRIES LTD., (AN INDIAN PUBLIC LIMITED COMPANY), 601 CENTRAL PLAZA, 2/6, SARAT BOSE ROAD, KOLKATA - 700020, WEST BENGAL, INDIA	
DATE OF REGISTRATION	30/05/2014
TITLE	CHAIR

PRIORITY NA

DESIGN NUMBER	261010
CLASS	03-01
1)SANOFI-AVENTIS DEUTSCHLAND GMBH, A GERMAN COMPANY OF BRÜNINGSTRASSE 50, 65929 FRANKFURT, GERMANY	
DATE OF REGISTRATION	17/03/2014
TITLE	MEASURING INSTRUMENT CASE
PRIORITY	

PRIORITY NUMBER	DATE	COUNTRY
002 312 751	19/09/2013	OHIM

DESIGN NUMBER	262880
CLASS	12-08
1)1. NAME: MALI JIGNESHKUMAR SHIVARAMBHAI, NATIONALITY: AN INDIAN, ADDRESS: 48-1-2 MAILVAS, AT PRATAPPURA, POST DHEEMA, TA. VAV, DIS. BANASKANTHA, PIN CODE 385566, GUJARAT, INDIA, 2. NAME: JETHWA VAISHNAV RAMESHCHANDRA, NATIONALITY: AN INDIAN, ADDRESS: PUSHKARDHAM SOCIETY, BLOCK NO 9, OPP. ST. DIVISION, LADHI ROAD, AMRELI 365601, GUJARAT, INDIA, 3. NAME: DODIA PARAKRAMSINH LALUBHAI, NATIONALITY: AN INDIAN, ADDRESS: NATHIBEN HOUSE, NR. VRUNDAVAN GUEST HOUSE, HOME GUARD CHOKE, DWARKA, GUJARAT, INDIA, 4. NAME: GOSWAMI TARANGGIRI HARESHGIRI, NATIONALITY: AN INDIAN, ADDRESS: B/28, HANSPURA RESIDENCY, HANSPURA, NARODA-DAHEGAM ROAD, NARODA, AHMEDABAD-382330, GUJARAT, INDIA, 5. NAME: DHANDHALIYA VIVEK BHARATBHAI, NATIONALITY: AN INDIAN, ADDRESS: 20, SHIVAM BARSO, MAHADEV'S WADI, NR. DISTRICT LIBRARY, BHAVNAGAR, PIN 364001, GUJARAT, INDIA	
DATE OF REGISTRATION	26/05/2014
TITLE	SOLAR POWERED ELECTRIC CAR
PRIORITY NA	

DESIGN NUMBER	262151
CLASS	12-16
1)HONDA MOTOR CO., LTD., A JAPANESE CORPORATION, OF 1-1, MINAMI-AOYAMA 2-CHOME, MINATO-KU, TOKYO, 107-8556 JAPAN	
DATE OF REGISTRATION	30/04/2014
TITLE	SIDE COVER FOR MOTORCYCLE
PRIORITY	

PRIORITY NUMBER	DATE	COUNTRY
2013-026072	08/11/2013	JAPAN

DESIGN NUMBER	259143
CLASS	19-06
1)MARKANDEYAN SENTHIL KUMAR, OF 1/280 RAJARATHINAM NAGAR, SINGARATHOTTAM, VANDALUR, CHENNAI-600048, TAMIL NADU, INDIA, AN INDIAN NATIONAL	
DATE OF REGISTRATION	30/12/2013
TITLE	STATIONERY EQUIPMENT
PRIORITY NA	

DESIGN NUMBER	262229
CLASS	05-05
1)M/S. BIBA APPARELS PRIVATE LIMITED, AN INDIAN PRIVATE LIMITED COMPANY INCORPORATED UNDER THE PROVISION OF THE COMPANIES ACT, 1956, AND HAVING ITS'S REGISTERED OFFICE AT RELIABLE HOUSE, SITUATED AT HANUMAN SILK MILL COMPOUND, KANJURMARG (WEST), OPP. HUMA MALL, MUMBAI-400 078 MAHARASHTRA, INDIA.	
DATE OF REGISTRATION	01/05/2014
TITLE	TEXTILE FABRIC
PRIORITY NA	

DESIGN NUMBER	260087
CLASS	13-03
1)AJANTA PRIVATE LIMITED, AN INDIAN COMPANY OF ORPAT INDUSTRIAL ESTATE, RAJKOT-MORBI HIGHWAY, MORBI 363641, STATE OF GUJARAT, INDIA	
DATE OF REGISTRATION	03/02/2014
TITLE	FUSE
PRIORITY NA	

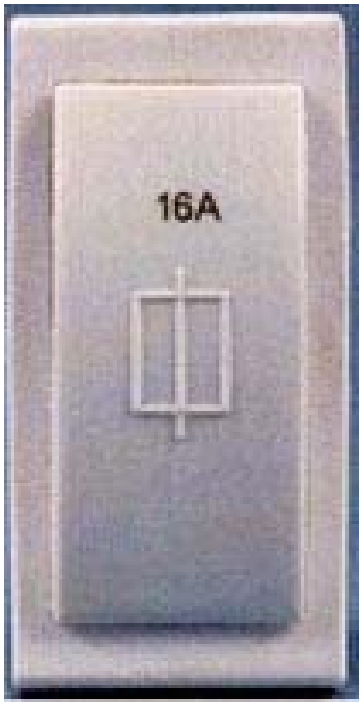

DESIGN NUMBER	261772	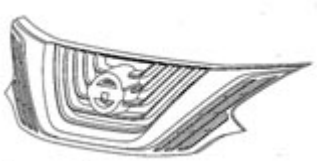
CLASS	12-16	
1)NISSAN JIDOSHA KABUSHIKI KAISHA (ALSO TRADING AS NISSAN MOTOR CO., LTD.), A JAPANESE COMPANY, ORGANIZED AND EXISTING UNDER THE LAWS OF JAPAN, OF NO. 2 TAKARACHO, KANAGAWA-KU, YOKOHAMA-SHI, KANAGAWA-KEN, JAPAN		
DATE OF REGISTRATION	16/04/2014	
TITLE	RADIATOR GRILLE FOR CAR	
PRIORITY NA		

DESIGN NUMBER	257412	
CLASS	26-06	
1)VOLVO LASTVAGNAR AB, OF SE 405 08 GÖTEBORG, SWEDEN.		
DATE OF REGISTRATION	10/10/2013	
TITLE	ROOF MARKER LAMP FOR VEHICLES	
PRIORITY		

PRIORITY NUMBER	DATE	COUNTRY
2013/0163	11/04/2013	SWEDEN

DESIGN NUMBER	259144	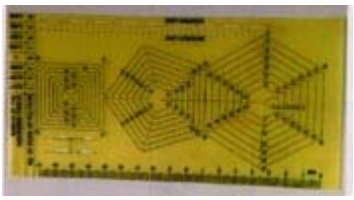
CLASS	19-06	
1)MARKANDEYAN SENTHIL KUMAR, OF 1/280 RAJARATHINAM NAGAR, SINGARATHOTTAM, VANDALUR, CHENNAI-600048, TAMIL NADU, INDIA, AN INDIAN NATIONAL		
DATE OF REGISTRATION	30/12/2013	
TITLE	STATIONERY EQUIPMENT	
PRIORITY NA		

DESIGN NUMBER	262230	
CLASS	05-05	
1)M/S. BIBA APPARELS PRIVATE LIMITED, AN INDIAN PRIVATE LIMITED COMPANY INCORPORATED UNDER THE PROVISION OF THE COMPANIES ACT, 1956, AND HAVING ITS'S REGISTERED OFFICE AT RELIABLE HOUSE, SITUATED AT HANUMAN SILK MILL COMPOUND, KANJURMARG (WEST), OPP. HUMA MALL, MUMBAI-400 078 MAHARASHTRA, INDIA.		
DATE OF REGISTRATION	01/05/2014	
TITLE	TEXTILE FABRIC	
PRIORITY NA		
DESIGN NUMBER	262269	
CLASS	07-04	
1)J. D. PRODUCTS (INDIA), INDIAN PROPRIETORSHIP FIRM HAVING PRINCIPAL PLACE OF BUSINESS AT SURVEY NO. 46 A, NEAR SAMRAT HYDRAULIC, FALCON SUBMERSIBLE ROAD, BY-PASS GONDAL CIRCLE, VAVDI, RAJKOT GUJARAT, INDIA AND HAVING PROPRIETOR JEETESH KUMAR DHIRAJLAL PADARIYA, RESIDING AT BLOCK NO. 1, NEW GANDHI NAGAR-CO-HOUSING CO-OP. SOCIETY STREET NO. 5, B/H. SHASTRINAGAR, NANA MAUVA MAIN ROAD, RAJKOT, GUJARAT, INDIA, INDIAN NATIONALS		
DATE OF REGISTRATION	01/05/2014	
TITLE	VEGETABLE CUTTER	
PRIORITY NA		
DESIGN NUMBER	261472	
CLASS	12-16	
1)DEERE & COMPANY, A US CORPORATION OF ONE JOHN DEERE PLACE, MOLINE, ILLINOIS, 61265-8098 USA		
DATE OF REGISTRATION	02/04/2014	
TITLE	FENDER UNIT FOR A VEHICLE	
PRIORITY NA		

DESIGN NUMBER	259955
CLASS	12-16
1)TATA MOTORS LIMITED, AN INDIAN COMPANY OF BOMBAY HOUSE, 24 HOMI MODY STREET, HUTATMA CHOWK, MUMBAI 400001, MAHARASHTRA, INDIA	
DATE OF REGISTRATION	31/01/2014
TITLE	DASHBOARD MID PAD OF A VEHICLE
PRIORITY NA	

DESIGN NUMBER	261008
CLASS	03-01
1)SANOFI-AVENTIS DEUTSCHLAND GMBH, A GERMAN COMPANY OF BRÜNINGSTRASSE 50, 65929 FRANKFURT AM MAIN, GERMANY	
DATE OF REGISTRATION	17/03/2014
TITLE	MEASURING INSTRUMENT CASE

PRIORITY

PRIORITY NUMBER	DATE	COUNTRY
002 312 751	19/09/2013	OHIM

DESIGN NUMBER	261092
CLASS	15-01
1)YANMAR CO., LTD., A CORPORATION ORGANIZED AND EXISTING UNDER THE LAWS OF JAPAN, OF 1-9, TSURUNOCHO, KITA-KU, OSAKA-SHI, OSAKA 530-8311, JAPAN	
DATE OF REGISTRATION	19/03/2014
TITLE	FLYWHEEL COVER FOR ENGINES

PRIORITY

PRIORITY NUMBER	DATE	COUNTRY
JPD 2013-25478	31/10/2013	JAPAN

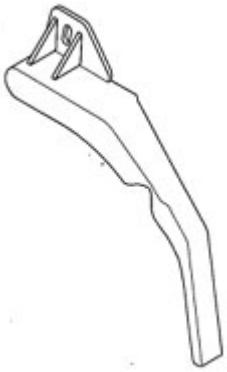

DESIGN NUMBER	260724
CLASS	24-99
1)KONINKLIJKE PHILIPS N.V., A COMPANY ORGANIZED AND EXISTING UNDER THE LAWS OF THE KINGDOM OF THE NETHERLANDS, RESIDING AT EINDHOVEN, WHOSE POST-OFFICE ADDRESS IS HIGH TECH CAMPUS 5, 5656 AE EINDHOVEN, THE NETHERLANDS	
DATE OF REGISTRATION	28/02/2014
TITLE	MOUNT FOR HEATHCARE PRODUCTS
PRIORITY NA	

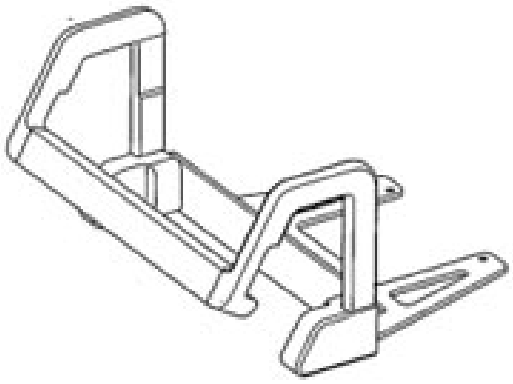

DESIGN NUMBER	262500
CLASS	06-01
1)LITTLE NAP DESIGNS PVT. LTD., A COMPANY ORGANISED AND EXISTING UNDER THE INDIAN COMPANIES ACT, 1956, OF THE ADDRESS 23 FIRST FLOOR, M.B. ROAD, KHANPUR EXTN, NEW DELHI-110062, DELHI, INDIA	
DATE OF REGISTRATION	09/05/2014
TITLE	CHAIR
PRIORITY NA	

DESIGN NUMBER	262227
CLASS	05-05
1)M/S. BIBA APPARELS PRIVATE LIMITED, AN INDIAN PRIVATE LIMITED COMPANY INCORPORATED UNDER THE PROVISION OF THE COMPANIES ACT, 1956, AND HAVING ITS'S REGISTERED OFFICE AT RELIABLE HOUSE, SITUATED AT HANUMAN SILK MILL COMPOUND, KANJURMARG (WEST), OPP. HUMA MALL, MUMBAI-400 078 MAHARASHTRA, INDIA.	
DATE OF REGISTRATION	01/05/2014
TITLE	TEXTILE FABRIC
PRIORITY NA	

DESIGN NUMBER	260032
CLASS	09-04
1)PRAGUN DANIA (INDIVIDUAL) WHOES ADDRESS IS 487/10, PEERAGARHI CHOWK, NEW DELHI-110087.	
DATE OF REGISTRATION	03/02/2014
TITLE	TRAY
PRIORITY NA	

DESIGN NUMBER	258708
CLASS	15-99
1)SANDVIK INTELLECTUAL PROPERTY AB OF SE-811 81 SANDVIKEN, SWEDEN, A SWEDISH COMPANY	
DATE OF REGISTRATION	12/12/2013
TITLE	CRUSHING SHELL FOR CRUSHER

PRIORITY

PRIORITY NUMBER	DATE	COUNTRY
001376073	27/06/2013	OHIM

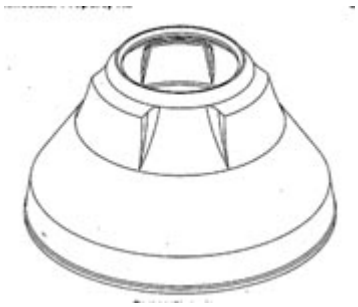

DESIGN NUMBER	260333
CLASS	07-02
1)SHRI VELJI MONSHI SHAH, SHRI KANTI MONSHI SHAH, SHRI JITENDRA RAGHAVJI GADA AND SHRI RAMESHCHANDRA RAGHAVJI GADA, TRADING IN THE NAME OF AXIS IMPEX, AN INDIAN PARTNERSHIP FIRM REGISTERED UNDER THE PARTNERSHIP ACT, 1932, HAVING ITS PLACE OF BUSINESS AT SHOP NO. 4, 83-85, DADY SHETH AGIARY LANE, MUMBAI-400002, MAHARASHTRA, INDIA	
DATE OF REGISTRATION	14/02/2014
TITLE	CASSEROLE
PRIORITY NA	

DESIGN NUMBER	263004
CLASS	23-03
1)FERROLI HEATING (SOUTH ASIA) PVT. LTD., (A COMPANY ORGANIZED AND EXISTING UNDER THE INDIAN COMPANIES ACT, 1956) OF THE ADDRESS TARGET ASSOCIATES PRIVATE LTD, 148, EPIP 2ND PHASE, PRESTIGE FEATHERLITE TECHPARK, WHITEFIELD, BANGALORE, KARNATAKA-560066, INDIA	
DATE OF REGISTRATION	30/05/2014
TITLE	ELECTRIC WATER HEATER
PRIORITY NA	

DESIGN NUMBER	262165
CLASS	12-08
1)BAYERISCHE MOTOREN WERKE AKTIENGESELLSCHAFT, OF PETUELRING 130, 80809, MUENCHEN, GERMANY, A GERMAN COMPANY	
DATE OF REGISTRATION	30/04/2014
TITLE	CAR
PRIORITY	

PRIORITY NUMBER	DATE	COUNTRY
DE 402013101079.7	31/10/2013	GERMANY

DESIGN NUMBER	259779
CLASS	07-01
1)EAGLE HOME APPLIANCES PVT. LTD., AN INDIAN COMPANY HAVING ADDRESS FOR SERVICE AT 4TH FLOOR, PARMAR GALLERY, SHIVARKAR ROAD, OPPOSITE PARMAR PARK, WANAWADI, PUNE 411040, MAHARASHTRA, INDIA	
DATE OF REGISTRATION	29/01/2014
TITLE	FLASK
PRIORITY NA	

DESIGN NUMBER	262698
CLASS	03-01
1)ALKOSIGN DISPLAY SYSTEMS, AN INDIAN PARTNERSHIP FIRM AT 801, 8TH FLOOR, EMBASSY CHAMBERS, 3RD ROAD, KHAR (WEST), MUMBAI: 400052 (INDIA): AS WELL AS: BLDG. NO. 04, SHEETAL SUPREME IND. COMPLEX, SURVEY NO. 75, H. NO. 02, WALIV, SATIVALI ROAD, VASAI (EAST), DIST. THANE-401208 (INDIA) INDIAN NATIONAL WHOSE PARTNERS ARE TRILOCHAN SINGH MARWAHA, SANDEEP SINGH MARWAHA, SUKIRAN KAUR MARWAHA, ALL INDIAN OF ABOVE ADDRESS	
DATE OF REGISTRATION	19/05/2014
TITLE	LETTER BOX
PRIORITY NA	

DESIGN NUMBER	262236
CLASS	05-05
1)M/S. BIBA APPARELS PRIVATE LIMITED, AN INDIAN PRIVATE LIMITED COMPANY INCORPORATED UNDER THE PROVISION OF THE COMPANIES ACT, 1956, AND HAVING ITS'S REGISTERED OFFICE AT RELIABLE HOUSE, SITUATED AT HANUMAN SILK MILL COMPOUND, KANJURMARG (WEST), OPP. HUMA MALL, MUMBAI-400078 MAHARASHTRA, INDIA	
DATE OF REGISTRATION	01/05/2014
TITLE	TEXTILE FABRIC
PRIORITY NA	

DESIGN NUMBER	261480
CLASS	31-00
1)KONINKLIJKE PHILIPS N.V., A COMPANY ORGANIZED AND EXISTING UNDER THE LAWS OF THE KINGDOM OF THE NETHERLANDS, RESIDING AT EINDHOVEN, WHOSE POST-OFFICE ADDRESS IS HIGH TECH CAMPUS 5, 5656 AE EINDHOVEN, THE NETHERLANDS	
DATE OF REGISTRATION	02/04/2014
TITLE	FILTER FOR BLENDER

PRIORITY

PRIORITY NUMBER	DATE	COUNTRY
002327684-0001	16/10/2013	OHIM

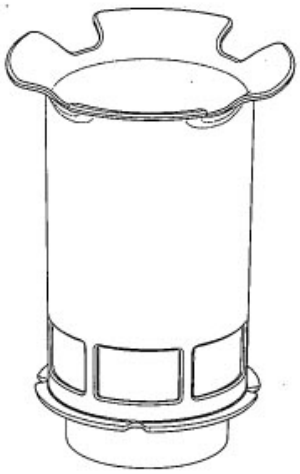

DESIGN NUMBER	261534
CLASS	24-02
1)KONINKLIJKE PHILIPS N.V., A COMPANY ORGANIZED AND EXISTING UNDER THE LAWS OF THE KINGDOM OF THE NETHERLANDS, RESIDING AT EINDHOVEN, WHOSE POST-OFFICE ADDRESS IS HIGH TECH CAMPUS 5, 5656 AE EINDHOVEN, THE NETHERLANDS	
DATE OF REGISTRATION	04/04/2014
TITLE	SENSOR FOR RESPIRATORY GAS MONITORING
PRIORITY	

PRIORITY NUMBER	DATE	COUNTRY
002335562-0001	30/10/2013	OHIM

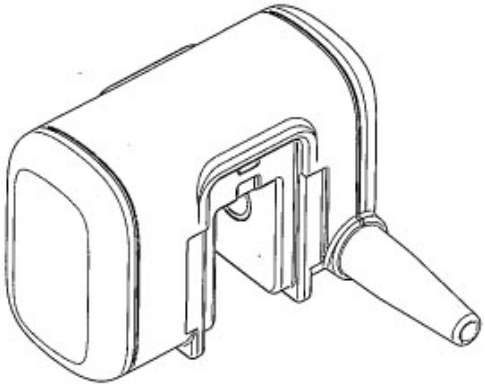

DESIGN NUMBER	261597
CLASS	08-06
1)M/S MARS INDUSTRIES PVT. LTD., (A COMPANY INCORPORATED UNDER INDIAN COMPANIES ACT) A-88 ROAD NO. 2, MAHIPALPUR EXTN., NEW DELHI-110037, (INDIA)	
DATE OF REGISTRATION	09/04/2014
TITLE	HANDLE SET
PRIORITY NA	

DESIGN NUMBER	259900
CLASS	12-16
1)TATA MOTORS LIMITED, AN INDIAN COMPANY OF BOMBAY HOUSE, 24 HOMI MODY STREET, HUTATMA CHOWK, MUMBAI 400001, MAHARASHTRA, INDIA	
DATE OF REGISTRATION	31/01/2014
TITLE	C PILLAR TRIM OF A VEHICLE
PRIORITY NA	

DESIGN NUMBER	260040	
CLASS	26-05	
1)HAVELLS INDIA LIMITED HAVING REGISTERED OFFICE AT 1, RAJ NARAIN MARG, CIVIL LINES, DELHI 110054		
DATE OF REGISTRATION	03/02/2014	
TITLE	DOWN LIGHTER	
PRIORITY NA		

DESIGN NUMBER	261773	
CLASS	12-16	
1)NISSAN JIDOSHA KABUSHIKI KAISHA (ALSO TRADING AS NISSAN MOTOR CO., LTD.), A JAPANESE COMPANY, ORGANIZED AND EXISTING UNDER THE LAWS OF JAPAN, OF NO. 2 TAKARACHO, KANAGAWA-KU, YOKOHAMA-SHI, KANAGAWA-KEN, JAPAN		
DATE OF REGISTRATION	16/04/2014	
TITLE	INSTRUMENT PANEL FOR CAR	
PRIORITY NA		

DESIGN NUMBER	260547	
CLASS	24-02	
1)BAYER PHARMA AKTIENGESELLSCHAFT, OF MÜLLERSTR. 178. 13353 BERLIN, GERMANY AND BANG & OLUFSEN MEDICOM A/S, OF GIMSINGLUNDVEJ 20, 7600 STRUE, DENMARK		
DATE OF REGISTRATION	21/02/2014	
TITLE	ELECTRONIC MEDICAL AUTOINJECTOR	
PRIORITY		

PRIORITY NUMBER	DATE	COUNTRY
002313122-0002	20/09/2013	OHIM

DESIGN NUMBER	259145
CLASS	19-06
1)MARKANDEYAN SENTHIL KUMAR, OF 1/280 RAJARATHINAM NAGAR, SINGARATHOTTAM, VANDALUR, CHENNAI-600048, TAMIL NADU, INDIA, AN INDIAN NATIONAL	
DATE OF REGISTRATION	30/12/2013
TITLE	STATIONERY EQUIPMENT
PRIORITY NA	

DESIGN NUMBER	262642
CLASS	03-01
1)MAGPUL INDUSTRIES CORPORATION, 400 YOUNG COURT, UNIT 1, ERIE, COLORADO 80516, UNITED STATES OF AMERICA, A COLORADO CORPORATION	
DATE OF REGISTRATION	15/05/2014
TITLE	CASE FOR A SMART PHONE

PRIORITY

PRIORITY NUMBER	DATE	COUNTRY
29/472,624	14/11/2013	U.S.A.

DESIGN NUMBER	262231
CLASS	05-05
1)M/S. BIBA APPARELS PRIVATE LIMITED, AN INDIAN PRIVATE LIMITED COMPANY INCORPORATED UNDER THE PROVISION OF THE COMPANIES ACT, 1956, AND HAVING ITS'S REGISTERED OFFICE AT RELIABLE HOUSE, SITUATED AT HANUMAN SILK MILL COMPOUND, KANJURMARG (WEST), OPP. HUMA MALL, MUMBAI-400 078 MAHARASHTRA, INDIA.	
DATE OF REGISTRATION	01/05/2014
TITLE	TEXTILE FABRIC
PRIORITY NA	

DESIGN NUMBER	256502
CLASS	15-99

1)DRESSER, INC. INCORPORATED UNDER THE LAWS OF USA HAVING ITS REGISTERED OFFICE AT
3814 JARRETT WAY, ADDISON, TEXAS 78728 UNITED STATES OF AMERICA

DATE OF REGISTRATION	16/09/2013
TITLE	FUEL DISPENSER

PRIORITY

PRIORITY NUMBER	DATE	COUNTRY
29/449973	15/03/2013	U.S.A.

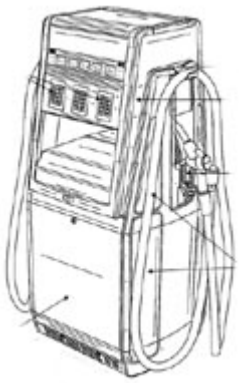

DESIGN NUMBER	261474
CLASS	12-16

1)DEERE & COMPANY, A US CORPORATION OF
ONE JOHN DEERE PLACE, MOLINE, ILLINOIS, 61265 - 8098, USA

DATE OF REGISTRATION	02/04/2014
TITLE	BUCKET FOR A WORK VEHICLE

PRIORITY NA

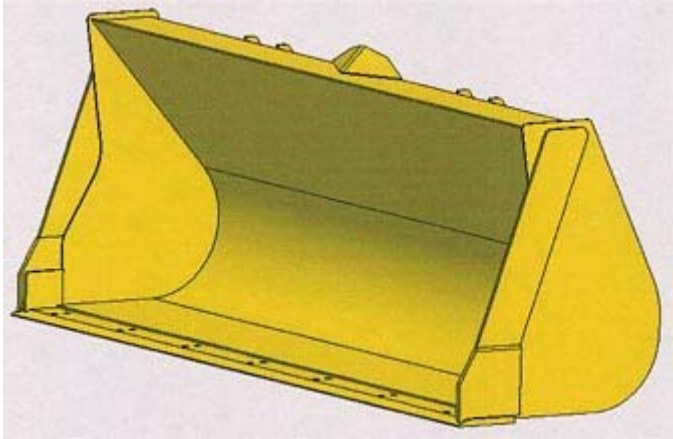

DESIGN NUMBER	261594
CLASS	08-06

1)M/S MARS INDUSTRIES PVT. LTD., (A COMPANY INCORPORATED UNDER INDIAN COMPANIES ACT)
A-88 ROAD NO. 2, MAHIPALPUR EXTN., NEW DELHI-110037, (INDIA)

DATE OF REGISTRATION	09/04/2014
TITLE	HANDLE SET

PRIORITY NA

DESIGN NUMBER	259889
CLASS	12-16
1)TATA MOTORS LIMITED, AN INDIAN COMPANY OF BOMBAY HOUSE, 24 HOMI MODY STREET, HUTATMA CHOWK, MUMBAI 400001, MAHARASHTRA, INDIA	
DATE OF REGISTRATION	31/01/2014
TITLE	FRONT SEATS OF A VEHICLE
PRIORITY NA	

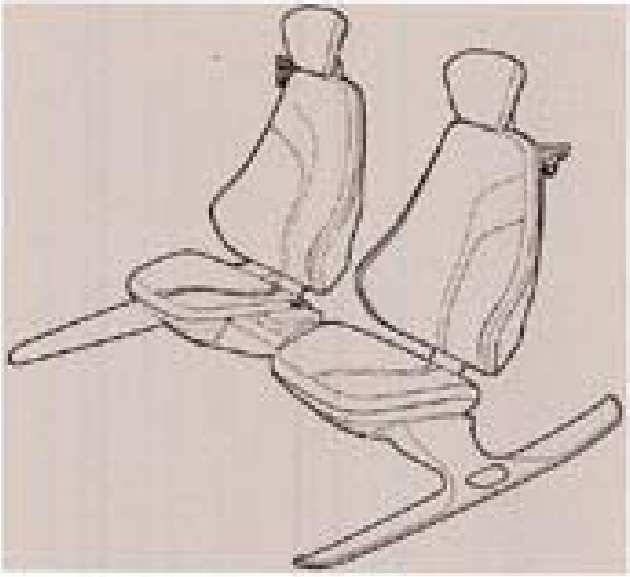

DESIGN NUMBER	259959
CLASS	12-16
1)TATA MOTORS LIMITED, AN INDIAN COMPANY OF BOMBAY HOUSE, 24 HOMI MODY STREET, HUTATMA CHOWK, MUMBAI 400001, MAHARASHTRA, INDIA	
DATE OF REGISTRATION	31/01/2014
TITLE	DOOR TOP ROLL OF A VEHICLE
PRIORITY NA	

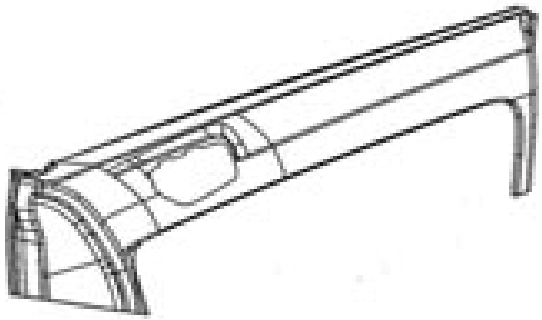

DESIGN NUMBER	261795
CLASS	08-06
1)GODREJ & BOYCE MFG. CO. LTD. OF LOCKS DIVISION (PLANT-18), PIROJSHANAGAR, VIKHROLI, MUMBAI - 400079, MAHARASHTRA, INDIA, INDIAN COMPANY	
DATE OF REGISTRATION	16/04/2014
TITLE	HANDLE
PRIORITY NA	

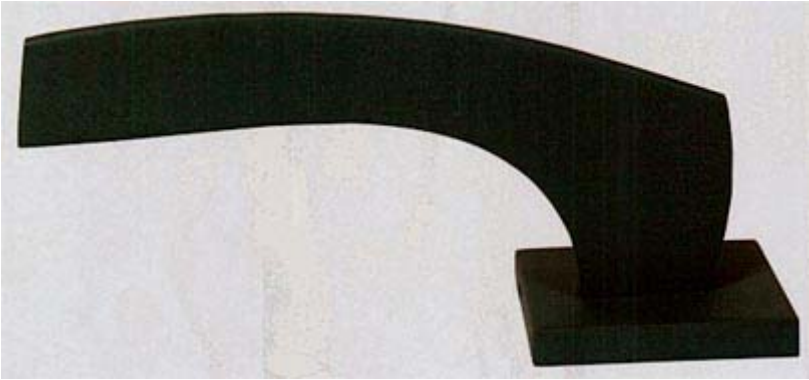

DESIGN NUMBER	263134
CLASS	15-07
1)MARS, INCORPORATED, A CORPORATION ORGANIZED AND EXISTING UNDER THE LAW OF USA, OF 6885 ELM STREET, MCLEAN, VIRGINIA 22101-3883, UNITED STATES OF AMERICA	
DATE OF REGISTRATION	05/06/2014
TITLE	CHILLER
PRIORITY	

PRIORITY NUMBER	DATE	COUNTRY

DESIGN NUMBER	262166
CLASS	24-01
1)SIEMENS AKTIENGESELLSCHAFT, OF WITTELSBACHERPLATZ 2, 80333 MUNCHEN, GERMANY, A GERMAN COMPANY	
DATE OF REGISTRATION	30/04/2014
TITLE	PATIENT TABLE
PRIORITY	

PRIORITY NUMBER	DATE	COUNTRY
EU 001389563	13/11/2013	OHIM

DESIGN NUMBER	259631
CLASS	10-04
1)(1) ER LALIT SHARMA S/O, SH LILA DHAR SHARMA, OF SITA RAM HOUSE, RANKER'S POINT COMPLEX, STREET NO. 6, BIBIWALA ROAD, BATHINDA (PIN-151001) INDIA, AN INDIAN NATIONAL, (2) ER ASHMEET SINGH SIDHU S/O MR. M. S. SIDHU, OF S/O DR. M. S. SIDHU, #22312, SHANT NAGAR, 100 FEET ROAD, BATHINDA (PIN-151001), INDIAN, AN INDIAN NATIONAL	
DATE OF REGISTRATION	23/01/2014
TITLE	SPEEDOMETER
PRIORITY NA	

DESIGN NUMBER	259781
CLASS	07-02
1)EAGLE HOME APPLIANCES PVT. LTD., AN INDIAN COMPANY HAVING ADDRESS FOR SERVICE AT 4TH FLOOR, PARMAR GALLERY, SHIVARKAR ROAD, OPPOSITE PARMAR PARK, WANAWADI, PUNE 411040, MAHARASHTRA, INDIA	
DATE OF REGISTRATION	29/01/2014
TITLE	CASSEROLE
PRIORITY NA	

DESIGN NUMBER	262237
CLASS	05-05
1)M/S. BIBA APPARELS PRIVATE LIMITED, AN INDIAN PRIVATE LIMITED COMPANY INCORPORATED UNDER THE PROVISION OF THE COMPANIES ACT, 1956, AND HAVING ITS'S REGISTERED OFFICE AT RELIABLE HOUSE, SITUATED AT HANUMAN SILK MILL COMPOUND, KANJURMARG (WEST), OPP. HUMA MALL, MUMBAI-400078 MAHARASHTRA, INDIA	
DATE OF REGISTRATION	01/05/2014
TITLE	TEXTILE FABRIC
PRIORITY NA	

DESIGN NUMBER	261535
CLASS	28-03
1)KONINKLIJKE PHILIPS N.V., A COMPANY ORGANIZED AND EXISTING UNDER THE LAWS OF THE KINGDOM OF THE NETHERLANDS, RESIDING AT EINDHOVEN, WHOSE POST-OFFICE ADDRESS IS HIGH TECH CAMPUS 5, 5656 AE EINDHOVEN, THE NETHERLANDS	
DATE OF REGISTRATION	04/04/2014
TITLE	MICRODERMABRASION DEVICE

PRIORITY

PRIORITY NUMBER	DATE	COUNTRY
002369538-0001	13/12/2013	OHIM

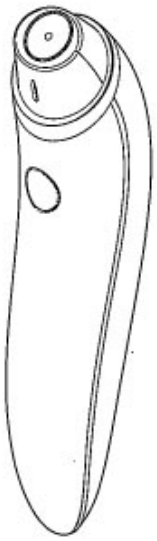

DESIGN NUMBER	261598	
CLASS	08-06	
1)M/S MARS INDUSTRIES PVT. LTD., (A COMPANY INCORPORATED UNDER INDIAN COMPANIES ACT) A-88 ROAD NO. 2, MAHIPALPUR EXTN., NEW DELHI-110037, (INDIA)		
DATE OF REGISTRATION	09/04/2014	
TITLE	HANDLE SET	
PRIORITY NA		
DESIGN NUMBER	259905	
CLASS	12-08	
1)TATA MOTORS LIMITED, AN INDIAN COMPANY OF BOMBAY HOUSE, 24 HOMI MODY STREET, HUTATMA CHOWK, MUMBAI 400001, MAHARASHTRA, INDIA		
DATE OF REGISTRATION	31/01/2014	
TITLE	CAR	
PRIORITY NA		
DESIGN NUMBER	260042	
CLASS	26-05	
1)HAVELLS INDIA LIMITED HAVING REGISTERED OFFICE AT 1, RAJ NARAIN MARG, CIVIL LINES, DELHI 110054		
DATE OF REGISTRATION	03/02/2014	
TITLE	DOWN LIGHTER	
PRIORITY NA		

DESIGN NUMBER	259148
CLASS	19-06

1)MARKANDEYAN SENTHIL KUMAR,
OF 1/280 RAJARATHINAM NAGAR, SINGARATHOTTAM, VANDALUR, CHENNAI-600048, TAMIL NADU, INDIA, AN INDIAN NATIONAL

DATE OF REGISTRATION	30/12/2013
TITLE	STATIONERY EQUIPMENT

PRIORITY NA

DESIGN NUMBER	258577
CLASS	06-04

1)HERMAN MILLER, INC., A CORPORATION ORGANIZED AND EXISTING UNDER THE LAWS OF THE STATE OF MICHIGAN, UNITED STATES OF AMERICA,
OF 855 EAST MAIN AVENUE, ZEELAND, MICHIGAN 49464, UNITED STATES OF AMERICA

DATE OF REGISTRATION	05/12/2013
TITLE	CABINET FOR VISUAL DISPLAY UNIT

PRIORITY

PRIORITY NUMBER	DATE	COUNTRY
29/457,255	07/06/2013	U.S.A.

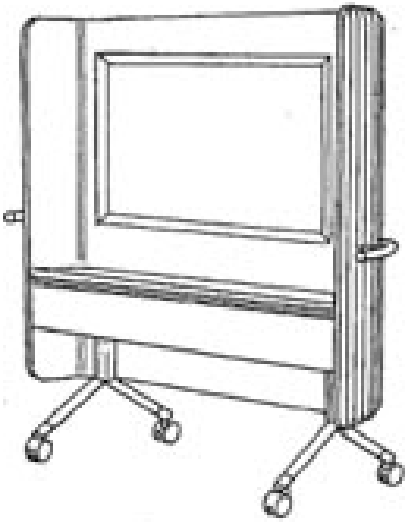

DESIGN NUMBER	262235
CLASS	05-05

1)M/S. BIBA APPARELS PRIVATE LIMITED, AN INDIAN PRIVATE LIMITED COMPANY INCORPORATED UNDER THE PROVISION OF THE COMPANIES ACT, 1956, AND HAVING ITS'S REGISTERED OFFICE AT
RELIABLE HOUSE, SITUATED AT HANUMAN SILK MILL COMPOUND, KANJURMARG (WEST), OPP. HUMA MALL, MUMBAI-400078 MAHARASHTRA, INDIA

DATE OF REGISTRATION	01/05/2014
TITLE	TEXTILE FABRIC

PRIORITY NA

DESIGN NUMBER	261479
CLASS	31-00
1)KONINKLIJKE PHILIPS N.V., A COMPANY ORGANIZED AND EXISTING UNDER THE LAWS OF THE KINGDOM OF THE NETHERLANDS, RESIDING AT EINDHOVEN, WHOSE POST-OFFICE ADDRESS IS HIGH TECH CAMPUS 5, 5656 AE EINDHOVEN, THE NETHERLANDS	
DATE OF REGISTRATION	02/04/2014
TITLE	FILTER WITH PUSHER FOR BLENDER

PRIORITY

PRIORITY NUMBER	DATE	COUNTRY
002327684-0003	16/10/2013	OHIM

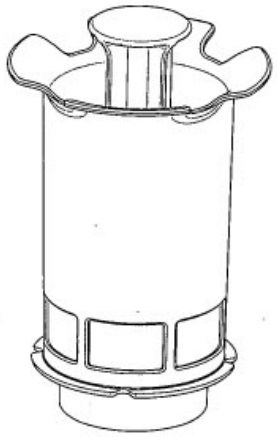

DESIGN NUMBER	261532
CLASS	26-06
1)KONINKLIJKE PHILIPS N.V., A COMPANY ORGANIZED AND EXISTING UNDER THE LAWS OF THE KINGDOM OF THE NETHERLANDS, RESIDING AT EINDHOVEN, WHOSE POST-OFFICE ADDRESS IS HIGH TECH CAMPUS 5, 5656 AE EINDHOVEN, THE NETHERLANDS	
DATE OF REGISTRATION	04/04/2014
TITLE	LED LAMP FOR MOTORCYCLE

PRIORITY

PRIORITY NUMBER	DATE	COUNTRY
002334532-0001	28/10/2013	OHIM

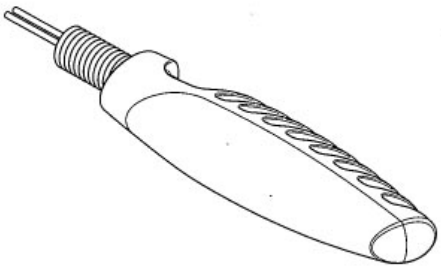

DESIGN NUMBER	261596
CLASS	08-07
1)M/S MARS INDUSTRIES PVT. LTD., (A COMPANY INCORPORATED UNDER INDIAN COMPANIES ACT) A-88 ROAD NO. 2, MAHIPALPUR EXTN., NEW DELHI-110037, (INDIA)	
DATE OF REGISTRATION	09/04/2014
TITLE	LOCK

PRIORITY NA

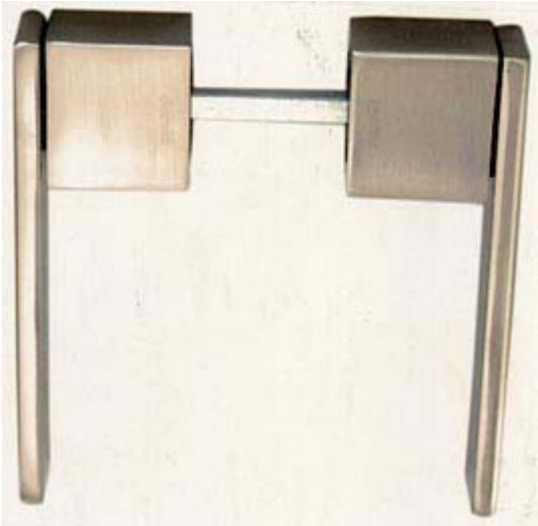

DESIGN NUMBER	263638
CLASS	14-01
1)BOSE CORPORATION, A CORPORATION OF THE STATE OF DELAWARE, OF THE MOUNTAIN, MS 3B1 FRAMINGHAM, MASSACHUSETTS 01701-9168, UNITED STATES OF AMERICA	
DATE OF REGISTRATION	24/06/2014
TITLE	PORTABLE AUDIO SYSTEM

PRIORITY

PRIORITY NUMBER	DATE	COUNTRY
29/479,459	16/01/2014	U.S.A.

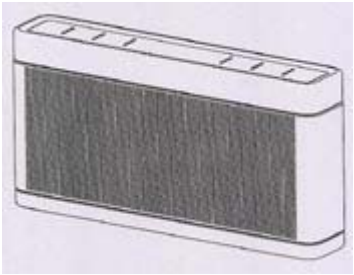

DESIGN NUMBER	259898
CLASS	12-16
1)TATA MOTORS LIMITED, AN INDIAN COMPANY OF BOMBAY HOUSE, 24 HOMI MODY STREET, HUTATMA CHOWK, MUMBAI 400001, MAHARASHTRA, INDIA	
DATE OF REGISTRATION	31/01/2014
TITLE	AUTOMATED MANUAL TRANSMISSION CONSOLE OF A VEHICLE
PRIORITY NA	

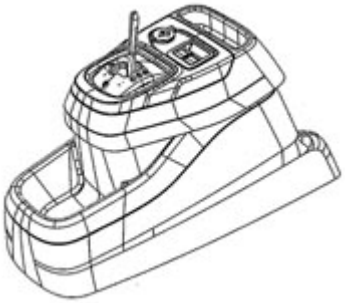

DESIGN NUMBER	260039
CLASS	09-03
1)OTSUKA PHARMACEUTICAL FACTORY, INC., A JAPANESE CORPORATION OF THE ADDRESS 115 KUGUHARA, TATEIWA, MUYA-CHO, NARUTO, TOKUSHIMA 772-8601, JAPAN	
DATE OF REGISTRATION	03/02/2014
TITLE	MEDICAL PACKAGING

PRIORITY

PRIORITY NUMBER	DATE	COUNTRY
2013-018349	09/08/2013	JAPAN

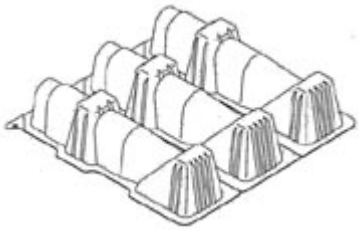

DESIGN NUMBER	260251
CLASS	08-01
1)HILTI AKTIENGESELLSCHAFT, FELDKIRCHERSTRASSE 100, FL-9494 SCHAAN, LIECHTENSTEIN, NATIONALITY: LIECHTENSTEIN	
DATE OF REGISTRATION	10/02/2014
TITLE	CHANGE MODULE FOR CORE BITS

PRIORITY

PRIORITY NUMBER	DATE	COUNTRY
756199601	09/08/2013	WIPO

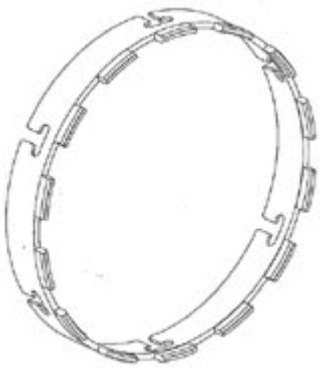

DESIGN NUMBER	258888
CLASS	09-01
1)CROWN DISTILLERIES PVT LTD., INDIAN NATIONAL OPP. DR. DHIR NURSING HOME, DAYALBANDH, BILASPUR-495001, CHHATISGARH, INDIA	
DATE OF REGISTRATION	20/12/2013
TITLE	BOTTLE
PRIORITY NA	

DESIGN NUMBER	260661
CLASS	15-09
1)ENDICO POWER TOOLS, AN INDIAN COMPANY, OF 1276/1, ST NO. 3, SHIMLAPURI, LUDHIANA-141003, PUNJAB, INDIA	
DATE OF REGISTRATION	27/02/2014
TITLE	END COVER FOR WOOD CUTTING MACHINE
PRIORITY NA	

DESIGN NUMBER	262215
CLASS	05-05

1)M/S. BIBA APPARELS PRIVATE LIMITED, AN INDIAN PRIVATE LIMITED COMPANY INCORPORATED UNDER THE PROVISION OF THE COMPANIES ACT, 1956, AND HAVING ITS'S REGISTERED OFFICE AT
RELIABLE HOUSE, SITUATED AT HANUMAN SILK MILL COMPOUND, KANJURMARG (WEST), OPP. HUMA MALL, MUMBAI-400 078 MAHARASHTRA, INDIA.

DATE OF REGISTRATION	01/05/2014
TITLE	TEXTILE FABRIC

PRIORITY NA

DESIGN NUMBER	262242
CLASS	05-05

1)M/S. BIBA APPARELS PRIVATE LIMITED, AN INDIAN PRIVATE LIMITED COMPANY INCORPORATED UNDER THE PROVISION OF THE COMPANIES ACT, 1956, AND HAVING ITS'S REGISTERED OFFICE AT
RELIABLE HOUSE, SITUATED AT HANUMAN SILK MILL COMPOUND, KANJURMARG (WEST), OPP. HUMA MALL, MUMBAI-400078 MAHARASHTRA, INDIA

DATE OF REGISTRATION	01/05/2014
TITLE	TEXTILE FABRIC

PRIORITY NA

DESIGN NUMBER	261556
CLASS	26-06

1)KONINKLIJKE PHILIPS N.V., A COMPANY ORGANIZED AND EXISTING UNDER THE LAWS OF THE KINGDOM OF THE NETHERLANDS, RESIDING AT EINDHOVEN, WHOSE POST-OFFICE ADDRESS IS
HIGH TECH CAMPUS 5, 5656 AE EINDHOVEN, THE NETHERLANDS

DATE OF REGISTRATION	07/04/2014
TITLE	LED BULB FOR VEHICLE

PRIORITY

PRIORITY NUMBER	DATE	COUNTRY
002334532-0002	28/10/2013	OHIM

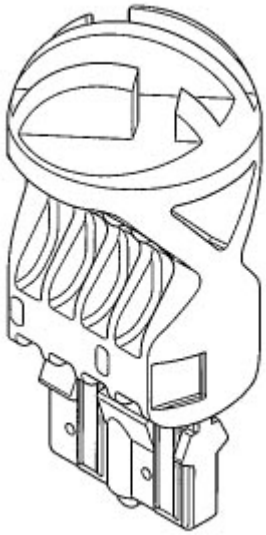

DESIGN NUMBER	261602	
CLASS	08-07	
1)M/S MARS INDUSTRIES PVT. LTD., (A COMPANY INCORPORATED UNDER INDIAN COMPANIES ACT) A-88 ROAD NO. 2, MAHIPALPUR EXTN., NEW DELHI-110037, (INDIA)		
DATE OF REGISTRATION	09/04/2014	
TITLE	LOCK	
PRIORITY NA		
DESIGN NUMBER	259988	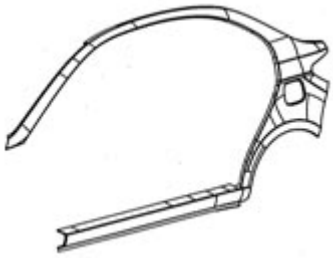
CLASS	12-16	
1)TATA MOTORS LIMITED, AN INDIAN COMPANY OF BOMBAY HOUSE, 24 HOMI MODY STREET, HUTATMA CHOWK, MUMBAI 400001, MAHARASHTRA, INDIA		
DATE OF REGISTRATION	31/01/2014	
TITLE	OUTER SIDE PANEL OF A VEHICLE	
PRIORITY NA		
DESIGN NUMBER	260055	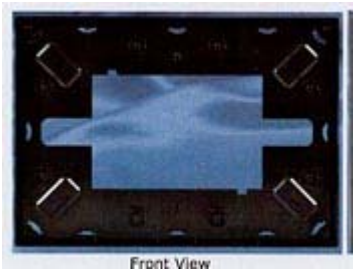
CLASS	13-03	
1)AJANTA PRIVATE LIMITED, AN INDIAN COMPANY OF ORPAT INDUSTRIAL ESTATE, RAJKOT-MORBI HIGHWAY, MORBI 363641, STATE OF GUJARAT, INDIA		
DATE OF REGISTRATION	03/02/2014	
TITLE	MODULE BOTTOM COVER FOR SWITCH	
PRIORITY NA		

DESIGN NUMBER	260310
CLASS	24-01
1)1. G. YEDUKONDALU, 2. A. SRINATH & 3. J. SURESH KUMAR, C/O G. YEDUKONDALU, D NO. 61-15-2, VMR ROAD, RAMALINGESHWARA NAGAR, VIJAYAWADA, ANDHRA PRADESH-520013, INDIA, ALL INDIAN NATIONALS	
DATE OF REGISTRATION	13/02/2014
TITLE	CHEST COMPRESSION DEVICE FOR MEDICAL FIRST AID
PRIORITY NA	

DESIGN NUMBER	250680
CLASS	12-08
1)MAN TRUCK & BUS AG, A GERMAN COMPANY OF DACHAUER STR. 667, 80995 MUNICH, GERMANY	
DATE OF REGISTRATION	03/01/2013
TITLE	DRIVER'S CAB OF A UTILITY VEHICLE

PRIORITY

PRIORITY NUMBER	DATE	COUNTRY
001335210	04/07/2012	OHIM

DESIGN NUMBER	260619
CLASS	01-99
1)ANSARI TRADING CO., DO SARAKA, DHADA FATEH SINGH, NR. PETROL PUMP, TANDA ROAD, HOSHIARPUR-144203 INDIA, AN INDIAN PROPRIETORSHIP FIRM WHOSE PROPRIETOR IS:-KHURSHED BEING INDIAN NATIONALS OF THE ABOVE ADDRESS	
DATE OF REGISTRATION	26/02/2014
TITLE	JAGGERY-BLOCK
PRIORITY NA	

DESIGN NUMBER	262788	
CLASS	23-01	
1)MANSUKHBHAI G. PATEL AN INDIAN NATIONAL SOLE PROPRIETOR OF SHREE UMIYA PLASTIC AN INDIAN PROPRIETORSHIP FIRM HAVING ITS PRINCIPAL PLACE OF BUSINESS AT 49-50, KRISHNA INDUSTRIAL ESTATE, OPP. AMRUTA SCHOOL, NEAR RABARI COLONY, AMRAIWADI, AHMEDABAD-26, GUJARAT-INDIA		
DATE OF REGISTRATION	21/05/2014	
TITLE	WATER DISTRIBUTION UNIT FOR IRRIGATION SYSTEMS	
PRIORITY NA		
DESIGN NUMBER	259147	
CLASS	19-06	
1)MARKANDEYAN SENTHIL KUMAR, OF 1/280 RAJARATHINAM NAGAR, SINGARATHOTTAM, VANDALUR, CHENNAI-600048, TAMIL NADU, INDIA, AN INDIAN NATIONAL		
DATE OF REGISTRATION	30/12/2013	
TITLE	STATIONERY EQUIPMENT	
PRIORITY NA		
DESIGN NUMBER	262689	
CLASS	07-02	
1)RISHABH PLAST INDUSTRIES, HAVING ITS ADDRESS AT 302, 3RD FLOOR, RAGHUVIR, OPP. PRABODHANKAR THAKARE HALL, CHASMUNDA CIRCLE, BORIVALI (W), MUMBAI, MAHARASHTRA (INDIA), PIN: 400092, AN INDIAN NATIONAL		
DATE OF REGISTRATION	19/05/2014	
TITLE	CASSEROLE	
PRIORITY NA		

DESIGN NUMBER	262232
CLASS	05-05

1)M/S. BIBA APPARELS PRIVATE LIMITED, AN INDIAN PRIVATE LIMITED COMPANY INCORPORATED UNDER THE PROVISION OF THE COMPANIES ACT, 1956, AND HAVING ITS'S REGISTERED OFFICE AT
RELIABLE HOUSE, SITUATED AT HANUMAN SILK MILL COMPOUND, KANJURMARG (WEST), OPP. HUMA MALL, MUMBAI-400 078 MAHARASHTRA, INDIA.

DATE OF REGISTRATION	01/05/2014
TITLE	TEXTILE FABRIC

PRIORITY NA

DESIGN NUMBER	262403
CLASS	10-02

1)LUXURY GOODS INTERNATIONAL (L.G.I.) SA, A LIMITED COMPANY INCORPORATED UNDER THE LAWS OF SWITZERLAND OF
CH. DES ROCHETTES 2, 2016 CORTAILLOD, SWITZERLAND

DATE OF REGISTRATION	07/05/2014
TITLE	WRISTWATCH

PRIORITY

PRIORITY NUMBER	DATE	COUNTRY
140373	13/01/2014	SWITZERLAND

DESIGN NUMBER	261595
CLASS	08-06

1)M/S MARS INDUSTRIES PVT. LTD., (A COMPANY INCORPORATED UNDER INDIAN COMPANIES ACT)
A-88 ROAD NO. 2, MAHIPALPUR EXTN., NEW DELHI-110037, (INDIA)

DATE OF REGISTRATION	09/04/2014
TITLE	HANDLE SET

PRIORITY NA

DESIGN NUMBER	259894
CLASS	12-16
1)TATA MOTORS LIMITED, AN INDIAN COMPANY OF BOMBAY HOUSE, 24 HOMI MODY STREET, HUTATMA CHOWK, MUMBAI 400001, MAHARASHTRA, INDIA BOMBAY HOUSE, 24 HOMI MODY STREET, HUTATMA CHOWK, MUMBAI 400001, MAHARASHTRA, INDIA	
DATE OF REGISTRATION	31/01/2014
TITLE	FRONT GRILL WITH HEADLAMP OF A VEHICLE
PRIORITY NA	

DESIGN NUMBER	261326
CLASS	14-02
1)NOKIA CORPORATION, A FINNISH CORPORATION, OF THE ADDRESS KEILALAHDENTIE 4, ESPOO, FINLAND 02150	
DATE OF REGISTRATION	28/03/2014
TITLE	HANDSET

PRIORITY

PRIORITY NUMBER	DATE	COUNTRY
29/468846	03/10/2013	U.S.A.

DESIGN NUMBER	260249
CLASS	08-01
1)HILTI AKTIENGESELLSCHAFT, FELDKIRCHERSTRASSE 100, FL-9494 SCHAAN, LIECHTENSTEIN, NATIONALITY: LIECHTENSTEIN	
DATE OF REGISTRATION	10/02/2014
TITLE	CHANGE MODULE FOR CORE BITS

PRIORITY

PRIORITY NUMBER	DATE	COUNTRY
756199601	09/08/2013	WIPO

DESIGN NUMBER	260631
CLASS	24-02
1)METTLER-TOLEDO AG, A CORPORATION ORGANIZED AND EXISTING UNDER THE LAWS OF SWITZERLAND, OF IM LANGACHER 44, CH-8606 GREIFENSEE, SWITZERLAND	
DATE OF REGISTRATION	26/02/2014
TITLE	DOSIMETER

PRIORITY

PRIORITY NUMBER	DATE	COUNTRY
002298539	28/08/2013	OHIM

DESIGN NUMBER	257956
CLASS	31-00
1)PEPSICO, INC., INCORPORATED IN NORTH CAROLINA OF 700 ANDERSON HILL ROAD, PURCHASE, NEW YORK 10577, UNITED STATES OF AMERICA	
DATE OF REGISTRATION	04/11/2013
TITLE	DISPENSER

PRIORITY

PRIORITY NUMBER	DATE	COUNTRY
29/453,961	03/05/2013	U.S.A.

DESIGN NUMBER	260659
CLASS	15-09
1)ENDICO POWER TOOLS, AN INDIAN COMPANY, OF 1276/1, ST NO. 3, SHIMLAPURI, LUDHIANA-141003, PUNJAB, INDIA	
DATE OF REGISTRATION	27/02/2014
TITLE	KNOB OF WOOD CUTTING MACHINE

PRIORITY NA

DESIGN NUMBER	262528	
CLASS	02-04	
1)NEXGEN FOOTWEAR PVT. LTD., H-42, UDYOG NAGAR, PEERA GARHI, DELHI-110041, INDIA. (AN INDIAN COMPANY DULY REGISTERED UNDER THE COMPANIES ACT, 1956)		
DATE OF REGISTRATION	12/05/2014	
TITLE	FOOTWEAR	
PRIORITY NA		
DESIGN NUMBER	262213	
CLASS	05-05	
1)M/S. BIBA APPARELS PRIVATE LIMITED, AN INDIAN PRIVATE LIMITED COMPANY INCORPORATED UNDER THE PROVISION OF THE COMPANIES ACT, 1956, AND HAVING ITS'S REGISTERED OFFICE AT RELIABLE HOUSE, SITUATED AT HANUMAN SILK MILL COMPOUND, KANJURMARG (WEST), OPP. HUMA MALL, MUMBAI-400 078 MAHARASHTRA, INDIA.		
DATE OF REGISTRATION	01/05/2014	
TITLE	TEXTILE FABRIC	
PRIORITY NA		
DESIGN NUMBER	262239	
CLASS	05-05	
1)M/S. BIBA APPARELS PRIVATE LIMITED, AN INDIAN PRIVATE LIMITED COMPANY INCORPORATED UNDER THE PROVISION OF THE COMPANIES ACT, 1956, AND HAVING ITS'S REGISTERED OFFICE AT RELIABLE HOUSE, SITUATED AT HANUMAN SILK MILL COMPOUND, KANJURMARG (WEST), OPP. HUMA MALL, MUMBAI-400078 MAHARASHTRA, INDIA		
DATE OF REGISTRATION	01/05/2014	
TITLE	TEXTILE FABRIC	
PRIORITY NA		

DESIGN NUMBER	262277
CLASS	09-03

1)UNILEVER PLC, A COMPANY REGISTERED IN ENGLAND AND WALES UNDER COMPANY NO. 41424 OF
UNILEVER HOUSE, 100 VICTORIA EMBANKMENT, LONDON, EC4Y 0DY, UNITED KINGDOM

DATE OF REGISTRATION	01/05/2014
TITLE	CARTON

PRIORITY

PRIORITY NUMBER	DATE	COUNTRY
002340430	07/11/2013	OHIM

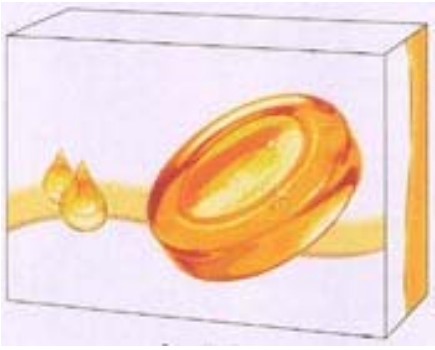

DESIGN NUMBER	261600
CLASS	08-06

1)M/S MARS INDUSTRIES PVT. LTD., (A COMPANY INCORPORATED UNDER INDIAN COMPANIES ACT)
A-88 ROAD NO. 2, MAHIPALPUR EXTN., NEW DELHI-110037, (INDIA)

DATE OF REGISTRATION	09/04/2014
TITLE	HANDLE SET

PRIORITY NA

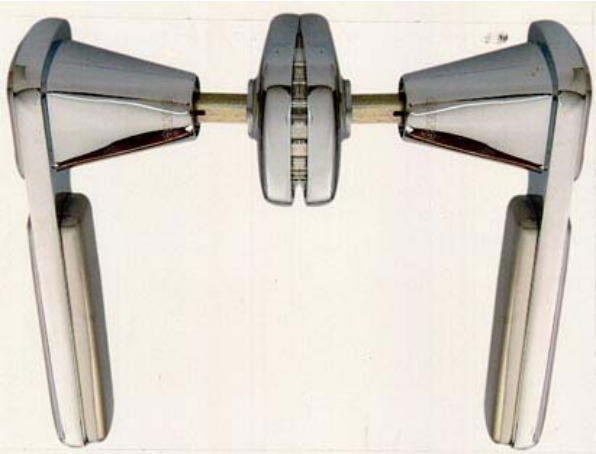

DESIGN NUMBER	260051
CLASS	13-03

1)AJANTA PRIVATE LIMITED, AN INDIAN COMPANY OF
ORPAT INDUSTRIAL ESTATE, RAJKOT-MORBI HIGHWAY, MORBI 363641, STATE OF GUJARAT, INDIA

DATE OF REGISTRATION	03/02/2014
TITLE	MODULE CASE FOR SWITCH

PRIORITY NA

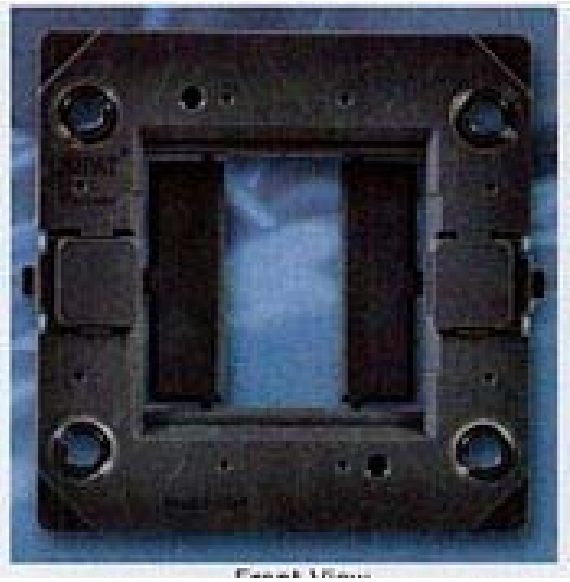

DESIGN NUMBER	261185
CLASS	08-05
1)SATA GMBH & CO. KG, OF DOMERTALSTRASSE 20, 70806 KORNWESTHEIM, DEUTSCHLAND, GERMANY, A GERMAN COMPANY	
DATE OF REGISTRATION	21/03/2014
TITLE	SPRAY GUN

PRIORITY

PRIORITY NUMBER	DATE	COUNTRY
201330462576.6	27/09/2013	CHINA

DESIGN NUMBER	258594
CLASS	24-01
1)DEPUY (IRELAND), OF LOUGHBEG INDUSTRIAL ESTATE, RINGASKIDDY, CO CORK, IRELAND	
DATE OF REGISTRATION	06/12/2013
TITLE	INTRAMEDULLARY SURGICAL INSTRUMENT

PRIORITY

PRIORITY NUMBER	DATE	COUNTRY
29/457,177	07/06/2013	U.S.A.

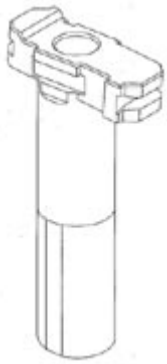

DESIGN NUMBER	262216
CLASS	05-05
1)M/S. BIBA APPARELS PRIVATE LIMITED, AN INDIAN PRIVATE LIMITED COMPANY INCORPORATED UNDER THE PROVISION OF THE COMPANIES ACT, 1956, AND HAVING ITS'S REGISTERED OFFICE AT RELIABLE HOUSE, SITUATED AT HANUMAN SILK MILL COMPOUND, KANJURMARG (WEST), OPP. HUMA MALL, MUMBAI-400 078 MAHARASHTRA, INDIA.	
DATE OF REGISTRATION	01/05/2014
TITLE	TEXTILE FABRIC
PRIORITY NA	

DESIGN NUMBER	262243
CLASS	05-05
1)M/S. BIBA APPARELS PRIVATE LIMITED, AN INDIAN PRIVATE LIMITED COMPANY INCORPORATED UNDER THE PROVISION OF THE COMPANIES ACT, 1956, AND HAVING ITS'S REGISTERED OFFICE AT RELIABLE HOUSE, SITUATED AT HANUMAN SILK MILL COMPOUND, KANJURMARG (WEST), OPP. HUMA MALL, MUMBAI-400078 MAHARASHTRA, INDIA	
DATE OF REGISTRATION	01/05/2014
TITLE	TEXTILE FABRIC
PRIORITY NA	

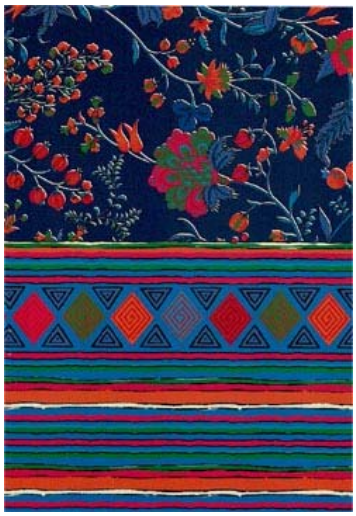

DESIGN NUMBER	263573
CLASS	09-01
1)DURAN GROUP GMBH, A GERMAN COMPANY, OF OTTO-SCHOTT-STRAßE 21, 97877 WERTHEIM, GERMANY	
DATE OF REGISTRATION	23/06/2014
TITLE	BOTTLE
PRIORITY	

PRIORITY NUMBER	DATE	COUNTRY
002403808	13/02/2014	OHIM

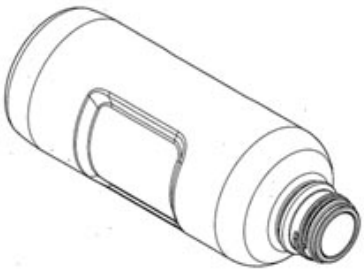

DESIGN NUMBER	260233
CLASS	13-03
1)A. D. SAJEEV (INDIAN) PROPRIETOR OF M/S MARIYA CONTROLS, 1/272/B, ELINJIPRA, PARIYARAM P.O., THRISSUR (DIST) PIN-680721, KERALA, INDIA	
DATE OF REGISTRATION	10/02/2014
TITLE	ELECTRICAL JUNCTION BOX FOR LED
PRIORITY NA	

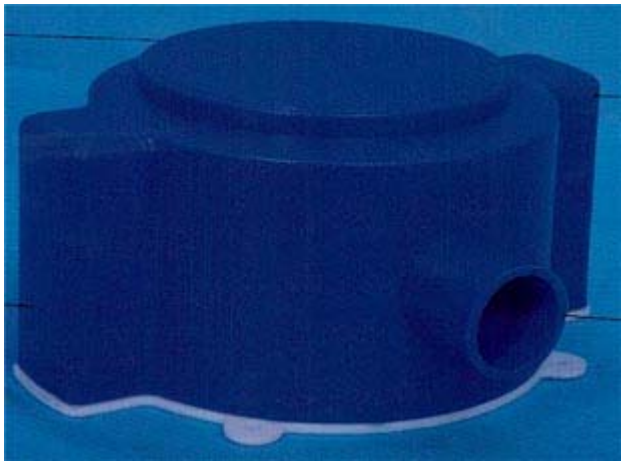

DESIGN NUMBER	261796
CLASS	08-06
1)GODREJ & BOYCE MFG. CO. LTD. OF LOCKS DIVISION (PLANT-18), PIROJSHANAGAR, VIKHROLI, MUMBAI - 400079, MAHARASHTRA, INDIA, INDIAN COMPANY	
DATE OF REGISTRATION	16/04/2014
TITLE	HANDLE
PRIORITY NA	

DESIGN NUMBER	263135
CLASS	15-07
1)MARS, INCORPORATED, A CORPORATION ORGANIZED AND EXISTING UNDER THE LAW OF USA, OF 6885 ELM STREET, MCLEAN, VIRGINIA 22101-3883, UNITED STATES OF AMERICA	
DATE OF REGISTRATION	05/06/2014
TITLE	CHILLER SHELF
PRIORITY	

PRIORITY NUMBER	DATE	COUNTRY

DESIGN NUMBER	263757
CLASS	12-09
1)MAHINDRA & MAHINDRA LIMITED, A COMPANY INCORPORATED UNDER THE COMPANIES ACT, 1913 WHOSE ADDRESS IS GATEWAY BUILDING, APOLLO BUNDER, MUMBAI 400001, MAHARASHTRA, INDIA	
DATE OF REGISTRATION	30/06/2014
TITLE	TRACTOR CANOPY
PRIORITY NA	

DESIGN NUMBER	260658
CLASS	15-09
1)ENDICO POWER TOOLS, AN INDIAN COMPANY, OF 1276/1, ST NO. 3, SHIMLAPURI, LUDHIANA-141003, PUNJAB, INDIA	
DATE OF REGISTRATION	27/02/2014
TITLE	COUPLING GUIDE OF WOOD CUTTING MACHINE
PRIORITY NA	

DESIGN NUMBER	262212
CLASS	05-05
1)M/S. BIBA APPARELS PRIVATE LIMITED, AN INDIAN PRIVATE LIMITED COMPANY INCORPORATED UNDER THE PROVISION OF THE COMPANIES ACT, 1956, AND HAVING ITS'S REGISTERED OFFICE AT RELIABLE HOUSE, SITUATED AT HANUMAN SILK MILL COMPOUND, KANJURMARG (WEST), OPP. HUMA MALL, MUMBAI-400 078 MAHARASHTRA, INDIA.	
DATE OF REGISTRATION	01/05/2014
TITLE	TEXTILE FABRIC
PRIORITY NA	

DESIGN NUMBER	262238
CLASS	05-05
1)M/S. BIBA APPARELS PRIVATE LIMITED, AN INDIAN PRIVATE LIMITED COMPANY INCORPORATED UNDER THE PROVISION OF THE COMPANIES ACT, 1956, AND HAVING ITS'S REGISTERED OFFICE AT RELIABLE HOUSE, SITUATED AT HANUMAN SILK MILL COMPOUND, KANJURMARG (WEST), OPP. HUMA MALL, MUMBAI-400078 MAHARASHTRA, INDIA	
DATE OF REGISTRATION	01/05/2014
TITLE	TEXTILE FABRIC
PRIORITY NA	

DESIGN NUMBER	261599
CLASS	08-06
1)M/S MARS INDUSTRIES PVT. LTD., (A COMPANY INCORPORATED UNDER INDIAN COMPANIES ACT) A-88 ROAD NO. 2, MAHIPALPUR EXTN., NEW DELHI-110037, (INDIA)	
DATE OF REGISTRATION	09/04/2014
TITLE	HANDLE SET
PRIORITY NA	

DESIGN NUMBER	259911
CLASS	12-16
1)TATA MOTORS LIMITED, AN INDIAN COMPANY OF BOMBAY HOUSE, 24 HOMI MODY STREET, HUTATMA CHOWK, MUMBAI 400001, MAHARASHTRA, INDIA	
DATE OF REGISTRATION	31/01/2014
TITLE	REAR QUARTER TRIM OF A VEHICLE
PRIORITY NA	

DESIGN NUMBER	260044
CLASS	13-03
1)HAVELLS INDIA LIMITED HAVING REGISTERED OFFICE AT 1, RAJ NARAIN MARG, CIVIL LINES, DELHI 110054	
DATE OF REGISTRATION	03/02/2014
TITLE	AUTOMATIC CHANGEOVER SWITCH
PRIORITY NA	

DESIGN NUMBER	258646
CLASS	30-03
1)DR. JOHN ABRAHAM, SHARON, SANTHOSH NAGAR, MANNUTHY-680651 THRISSUR, KERALA, INDIA AND DR. JOBY BASTIAN, PARAYAN KUZHIYIL, POONJAR P.O-686581, KOTTAYAM, KERALA, INDIA	
DATE OF REGISTRATION	10/12/2013
TITLE	DRINKING BOWL FOR CATTLE
PRIORITY NA	

DESIGN NUMBER	261183
CLASS	12-02
1)J. P. STEEL PRODUCTS., (AN INDIAN SOLE PROPRIETORSHIP CONCERN), HAVING OFFICE AT SARASWATI INDUSTRIAL ESTATE, UNIT NO. 10, 2ND FLOOR, JAY AMBE, BHAYANDAR (EAST), MUMBAI-401107, MAHARASHTRA, INDIA. WHOSE PROPRIETOR IS JITENDRA ROOPCHAND JAIN. (INDIAN NATIONAL) OF ABOVE ADDRESS	
DATE OF REGISTRATION	21/03/2014
TITLE	CYLINDER TROLLY
PRIORITY NA	

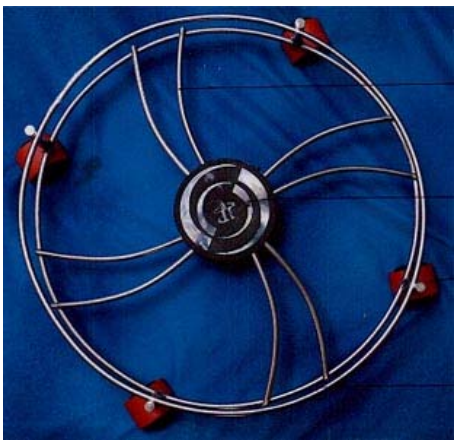

DESIGN NUMBER	261849
CLASS	11-01
1)CORE JEWELLERY PRIVATE LIMITED., (AN INDIAN PRIVATE LIMITED COMPANY REGISTERED UNDER THE INDIAN COMPANIES ACT, 1956), OF GJ-4, SDF-VII, SEEPZ, M.I.D.C., ANDHERI (EAST), MUMBAI-400096, MAHARASHTRA, INDIA	
DATE OF REGISTRATION	21/04/2014
TITLE	DIAMOND
PRIORITY NA	

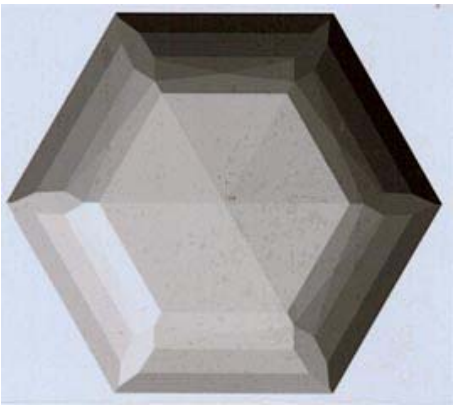

DESIGN NUMBER	263292
CLASS	04-02
1)TRIM PLASTICS LTD., (AN INDIAN PRIVATE LIMITED COMPANY REGISTERED UNDER THE INDIAN COMPANIES ACT, 1956), HAVING OFFICE AT B-17/6, HOJIWALA IND. ESTATE, ROAD NO. 14, SACHIN PALSANA ROAD, SACHIN, SURAT-394230	
DATE OF REGISTRATION	12/06/2014
TITLE	TOOTHBRUSH
PRIORITY NA	

DESIGN NUMBER	262128
CLASS	12-15
1)COMPAGNIE GENERALE DES ETABLISSEMENTS MICHELIN, A FRENCH COMPANY OF 12 COURS SABLON, F-63000, CLERMONT-FERRAND, FRANCE, AND MICHELIN RECHERCHE ET TECHNIQUE S.A., A SWISS COMPANY OF ROUTE LOUIS BRAILLE 10, CH-1763 GRANGES-PACCOT, SWITZERLAND	
DATE OF REGISTRATION	29/04/2014
TITLE	TYRE

PRIORITY

PRIORITY NUMBER	DATE	COUNTRY
13/5068	26/11/2013	FRANCE

DESIGN NUMBER	262217
CLASS	05-05
1)M/S. BIBA APPARELS PRIVATE LIMITED, AN INDIAN PRIVATE LIMITED COMPANY INCORPORATED UNDER THE PROVISION OF THE COMPANIES ACT, 1956, AND HAVING ITS'S REGISTERED OFFICE AT RELIABLE HOUSE, SITUATED AT HANUMAN SILK MILL COMPOUND, KANJURMARG (WEST), OPP. HUMA MALL, MUMBAI-400 078 MAHARASHTRA, INDIA	
DATE OF REGISTRATION	01/05/2014
TITLE	TEXTILE FABRIC
PRIORITY NA	

DESIGN NUMBER	259994
CLASS	12-16
1)TATA MOTORS LIMITED, AN INDIAN COMPANY OF BOMBAY HOUSE, 24 HOMI MODY STREET, HUTATMA CHOWK, MUMBAI 400001, MAHARASHTRA, INDIA	
DATE OF REGISTRATION	31/01/2014
TITLE	TAILGATE OF A VEHICLE
PRIORITY NA	

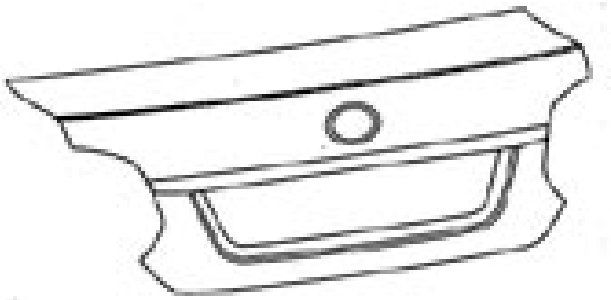

DESIGN NUMBER	260058
CLASS	13-03
1)AJANTA PRIVATE LIMITED, AN INDIAN COMPANY OF ORPAT INDUSTRIAL ESTATE, RAJKOT-MORBI HIGHWAY, MORBI 363641, STATE OF GUJARAT, INDIA	
DATE OF REGISTRATION	03/02/2014
TITLE	MODULE BOTTOM COVER FOR SWITCH
PRIORITY NA	

DESIGN NUMBER	260250
CLASS	08-01
1)HILTI AKTIENGESELLSCHAFT, FELDKIRCHERSTRASSE 100, FL-9494 SCHAAN, LIECHTENSTEIN, NATIONALITY: LIECHTENSTEIN	
DATE OF REGISTRATION	10/02/2014
TITLE	CHANGE MODULES FOR CORE BITS

PRIORITY

PRIORITY NUMBER	DATE	COUNTRY
756199601	09/08/2013	WIPO

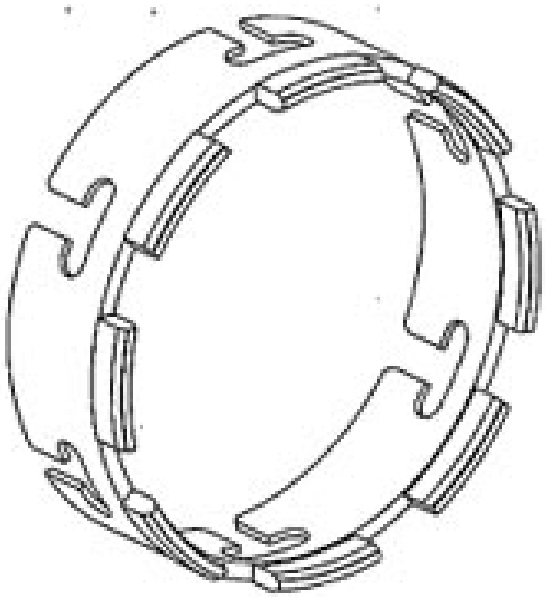

DESIGN NUMBER	261139
CLASS	12-11
1)BAJAJ AUTO LIMITED, AN INDIAN COMPANY, INCORPORATED UNDER THE COMPANIES ACT OF 1956, HAVING ITS PRINCIPAL PLACE OF BUSINESS AT NEW 2ND & 3RD FLOOR, KHIVRAJ BUILDING, NO. 616, ANNASALAI, CHENNAI - 600006, STATE OF TAMIL NADU, INDIA, AND REGISTERED OFFICE AT AKURDI, PUNE-411035, STATE OF MAHARASHTRA, INDIA	
DATE OF REGISTRATION	20/03/2014
TITLE	HUGGER FOR MOTORCYCLE
PRIORITY NA	

DESIGN NUMBER	262904
CLASS	12-08
1)HONDA MOTOR CO., LTD., A JAPANESE CORPORATION, OF 1-1, MINAMI-AOYAMA 2-CHOME, MINATO-KU, TOKYO, JAPAN	
DATE OF REGISTRATION	27/05/2014
TITLE	CAR

PRIORITY

PRIORITY NUMBER	DATE	COUNTRY
2013-028767	06/12/2013	JAPAN

DESIGN NUMBER	260660
CLASS	15-09
1)ENDICO POWER TOOLS, AN INDIAN COMPANY, OF 1276/1, ST NO. 3, SHIMLAPURI, LUDHIANA-141003, PUNJAB, INDIA	
DATE OF REGISTRATION	27/02/2014
TITLE	BODY OF WOOD CUTTING MACHINE
PRIORITY NA	

DESIGN NUMBER	262214
CLASS	05-05
1)M/S. BIBA APPARELS PRIVATE LIMITED, AN INDIAN PRIVATE LIMITED COMPANY INCORPORATED UNDER THE PROVISION OF THE COMPANIES ACT, 1956, AND HAVING ITS'S REGISTERED OFFICE AT RELIABLE HOUSE, SITUATED AT HANUMAN SILK MILL COMPOUND, KANJURMARG (WEST), OPP. HUMA MALL, MUMBAI-400 078 MAHARASHTRA, INDIA.	
DATE OF REGISTRATION	01/05/2014
TITLE	TEXTILE FABRIC
PRIORITY NA	

DESIGN NUMBER	261601
CLASS	08-06
1)M/S MARS INDUSTRIES PVT. LTD., (A COMPANY INCORPORATED UNDER INDIAN COMPANIES ACT) A-88 ROAD NO. 2, MAHIPALPUR EXTN., NEW DELHI-110037, (INDIA)	
DATE OF REGISTRATION	09/04/2014
TITLE	HANDLE SET
PRIORITY NA	

DESIGN NUMBER	259979
CLASS	12-16
1)TATA MOTORS LIMITED, AN INDIAN COMPANY OF BOMBAY HOUSE, 24 HOMI MODY STREET, HUTATMA CHOWK, MUMBAI 400001, MAHARASHTRA, INDIA	
DATE OF REGISTRATION	31/01/2014
TITLE	ROOFLINER OF A VEHICLE
PRIORITY NA	

DESIGN NUMBER	260053
CLASS	13-03
1)AJANTA PRIVATE LIMITED, AN INDIAN COMPANY OF ORPAT INDUSTRIAL ESTATE, RAJKOT-MORBI HIGHWAY, MORBI 363641, STATE OF GUJARAT, INDIA	
DATE OF REGISTRATION	03/02/2014
TITLE	MODULE CASE FOR SWITCH
PRIORITY NA	

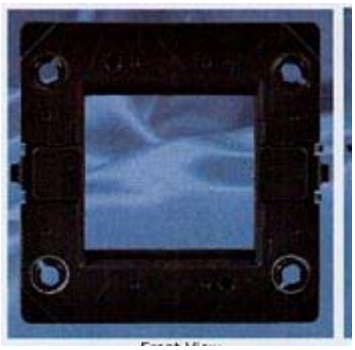

DESIGN NUMBER	261186
CLASS	08-05
1)SATA GMBH & CO. KG, OF DOMERTALSTRASSE 20, 70806 KORNWESTHEIM, DEUTSCHLAND, GERMANY, A GERMAN COMPANY	
DATE OF REGISTRATION	21/03/2014
TITLE	SPRAY GUN

PRIORITY

PRIORITY NUMBER	DATE	COUNTRY
201330462576.6	27/09/2013	CHINA

DESIGN NUMBER	261248
CLASS	12-08
1)BAYERISCHE MOTOREN WERKE AKTIENGESELLSCHAFT, OF PETUELRING 130, 80809, MUENCHEN, GERMANY, A GERMAN COMPANY	
DATE OF REGISTRATION	26/03/2014
TITLE	CAR

PRIORITY

PRIORITY NUMBER	DATE	COUNTRY
DE 402013100991.8	30/09/2013	GERMANY

DESIGN NUMBER	259173
CLASS	13-03

1)ELMEX CONTROLS PVT. LTD., A COMPANY INCORPORATED UNDER THE INDIAN COMPANIES ACT, AT,
12, G.I.D.C. ESTATE, MAKARPURA ROAD, VADODARA-390010, GUJARAT, INDIA.

DATE OF REGISTRATION	01/01/2014
TITLE	MODULAR RELAY

PRIORITY NA

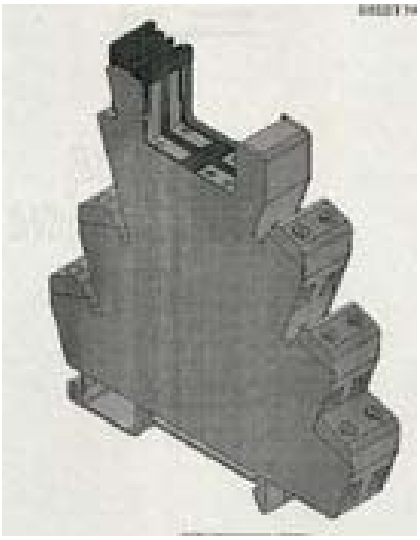

DESIGN NUMBER	260254
CLASS	08-01

1)HILTI AKTIENGESELLSCHAFT,
FELDKIRCHERSTRASSE 100, FL-9494 SCHAAN, LIECHTENSTEIN, NATIONALITY: LIECHTENSTEIN

DATE OF REGISTRATION	10/02/2014
TITLE	CORE BIT

PRIORITY

PRIORITY NUMBER	DATE	COUNTRY
756199601	09/08/2013	WIPO

DESIGN NUMBER	258002
CLASS	23-04

1)ZOBELE HOLDING S.P.A., AN ITALIAN COMPANY, HAVING ITS ADDRESS AT
VIA FERSINA 4, I-38100 TRENTO, ITALY

DATE OF REGISTRATION	06/11/2013
TITLE	AIR FRESHENERS

PRIORITY

PRIORITY NUMBER	DATE	COUNTRY
002232777-0005	06/05/2013	EUROPEAN UNION

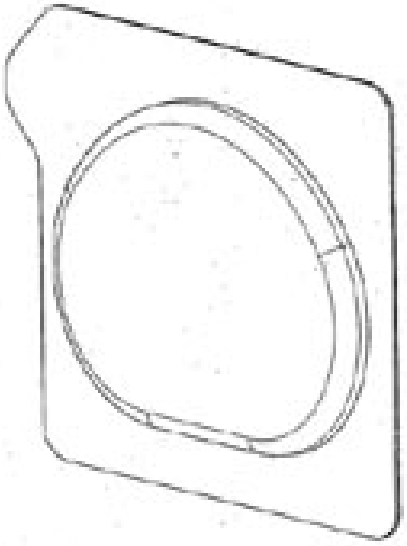

DESIGN NUMBER	263900
CLASS	12-16
1)HONDA MOTOR CO., LTD., A JAPANESE CORPORATION, OF 1-1, MINAMI-AOYAMA 2-CHOME, MINATO-KU, TOKYO, 107-8556 JAPAN	
DATE OF REGISTRATION	07/07/2014
TITLE	FRONT BUMPER FOR AUTOMOBILE
PRIORITY	

PRIORITY NUMBER	DATE	COUNTRY
2014-000736	17/01/2014	JAPAN

DESIGN NUMBER	233188
CLASS	28-02
1)HINDUSTAN UNILEVER LTD. HINDUSTAN LEVER HOUSE 165-166 BACKBAY RECLAMATION, MUMBAI-400 020, MAHARASHTRA, INDIA.	
DATE OF REGISTRATION	10/12/2010
TITLE	SOAP BAR
PRIORITY	

PRIORITY NUMBER	DATE	COUNTRY
001718685-0003	11/06/2010	OHIM

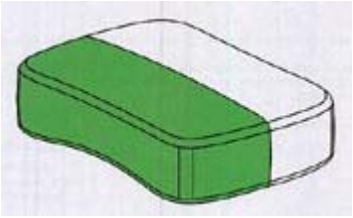

DESIGN NUMBER	262480
CLASS	19-06
1)FLAIR WRITING INSTRUMENTS, AN INDIAN PARTNERSHIP FIRM OF 63, B/C, GOVT. INDUSTRIAL ESTATE, CHARKOP, KANDIVALI (W), MUMBAI-400067, [MAHARASHTRA], INDIA; WHOSE PARTNERS ARE KHUBILAL J. RATHOD, MANJULA V. RATHOD AND MOHIT RATHOD; ALL INDIANS OF THE ABOVE ADDRESS	
DATE OF REGISTRATION	09/05/2014
TITLE	MARKER PEN
PRIORITY NA	

DESIGN NUMBER	253848	
CLASS	12-12	
1)DR. PUNIT KUMAR, ASSISTANT PROFESSOR, MECHANICAL ENGINEERING DEPARTMENT, NATIONAL INSTITUTE OF TECHNOLOGY, KURUKSHETRA, HARYANA, INDIA-136119, NATIONALITY: INDIAN AND SORABH AGGARWAL HOUSE NO. 2426, SECTOR 38 WEST (DMC) CHANDIGARH, INDIA, NATIONALITY: INDIAN		
DATE OF REGISTRATION	16/05/2013	
TITLE	WHEEL CHAIR	
PRIORITY NA		
DESIGN NUMBER	262218	
CLASS	05-05	
1)M/S. BIBA APPARELS PRIVATE LIMITED, AN INDIAN PRIVATE LIMITED COMPANY INCORPORATED UNDER THE PROVISION OF THE COMPANIES ACT, 1956, AND HAVING ITS'S REGISTERED OFFICE AT RELIABLE HOUSE, SITUATED AT HANUMAN SILK MILL COMPOUND, KANJURMARG (WEST), OPP. HUMA MALL, MUMBAI-400 078 MAHARASHTRA, INDIA.		
DATE OF REGISTRATION	01/05/2014	
TITLE	TEXTILE FABRIC	
PRIORITY NA		
DESIGN NUMBER	262252	
CLASS	05-05	
1)M/S. BIBA APPARELS PRIVATE LIMITED, AN INDIAN PRIVATE LIMITED COMPANY INCORPORATED UNDER THE PROVISION OF THE COMPANIES ACT, 1956, AND HAVING ITS'S REGISTERED OFFICE AT RELIABLE HOUSE, SITUATED AT HANUMAN SILK MILL COMPOUND, KANJURMARG (WEST), OPP. HUMA MALL, MUMBAI-400 078 MAHARASHTRA, INDIA.		
DATE OF REGISTRATION	01/05/2014	
TITLE	TEXTILE FABRIC	
PRIORITY NA		

DESIGN NUMBER	263591
CLASS	14-01
1)JVC KENWOOD CORPORATION, A BODY CORPORATE INCORPORATED UNDER THE LAWS OF JAPAN, HAVING ITS REGISTERED OFFICE AT 3-12, MORIYACHO, KANAGAWA-KU, YOKOHAMA-SHI, KANAGAWA, 221-0022, JAPAN	
DATE OF REGISTRATION	23/06/2014
TITLE	DIGITAL AUDIO DISC PLAYER FOR AUTOMOBILE
PRIORITY	

PRIORITY NUMBER	DATE	COUNTRY
2014-005808	19/03/2014	JAPAN

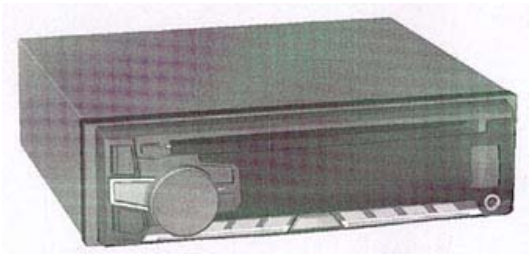

DESIGN NUMBER	259997
CLASS	31-00
1)QUALIMAR MACHINES PVT. LTD., A COMPANY INCORPORATED UNDER THE COMPANIES ACT, 1956., HAVING ITS PRINCIPLE PLACE OF BUSINESS AT, 53, G.I.D.C., NARMADA NAGAR, BHARUCH-392015. GUJARAT-INDIA	
DATE OF REGISTRATION	03/02/2014
TITLE	MACHINE FOR PREPARING FOOD
PRIORITY NA	

DESIGN NUMBER	260059
CLASS	13-03
1)AJANTA PRIVATE LIMITED, AN INDIAN COMPANY OF ORPAT INDUSTRIAL ESTATE, RAJKOT-MORBI HIGHWAY, MORBI 363641, STATE OF GUJARAT, INDIA	
DATE OF REGISTRATION	03/02/2014
TITLE	MODULE CASE FOR SWITCH
PRIORITY NA	

DESIGN NUMBER	260819
CLASS	03-01
1)APPLE INC., 1 INFINITE LOOP, CUPERTINO, CALIFORNIA 95014, UNITED STATES OF AMERICA,	
DATE OF REGISTRATION	06/03/2014
TITLE	CASE FOR ELECTRONIC DEVICE

PRIORITY

PRIORITY NUMBER	DATE	COUNTRY
29/466,599	10/09/2013	U.S.A

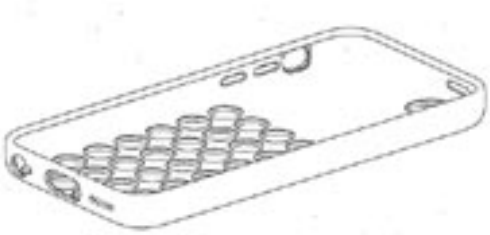

DESIGN NUMBER	262995
CLASS	09-01
1)A. A. ATTARWALA & CO. PVT. LTD., 82/84, CLARE ROAD, MUMBAI-400 008 STATE OF MAHARASHTRA INDIA,/	
DATE OF REGISTRATION	30/05/2014
TITLE	PERFUME BOTTLE
PRIORITY NA	

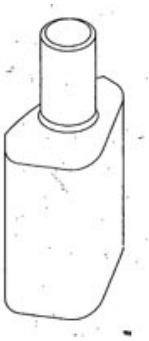

DESIGN NUMBER	259985
CLASS	12-08
1) TATA MOTORS LIMITED, BOMBAY HOUSE, 24 HOMI MODY STREET, HUTATMA CHOWK, MUMBAI 400001, MAHARASHTRA, INDIA	
DATE OF REGISTRATION	31/01/2014
TITLE	CAR
PRIORITY NA	