पेटेंट कार्यालय
शासकीय जर्नल

OFFICIAL JOURNAL
OF
THE PATENT OFFICE

निर्गमन सं. 45/2014	शुक्रवार	दिनांक: 07/11/2014
ISSUE NO. 45/2014	FRIDAY	DATE: 07/11/2014

पेटेंट कार्यालय का एक प्रकाशन

PUBLICATION OF THE PATENT OFFICE

INTRODUCTION

In view of the recent amendment made in the Patents Act, 1970 by the Patents (Amendment) Act, 2005 effective from 01st January 2005, the Official Journal of The Patent Office is required to be published under the Statute. This Journal is being published on weekly basis on every Friday covering the various proceedings on Patents as required according to the provision of Section 145 of the Patents Act 1970. All the enquiries on this Official Journal and other information as required by the public should be addressed to the Controller General of Patents, Designs & Trade Marks. Suggestions and comments are requested from all quarters so that the content can be enriched.

(**Chaitanya Prasad**)
CONTROLLER GENERAL OF PATENTS, DESIGNS & TRADE MARKS

7th NOVEMBER, 2014

CONTENTS

THE PATENT OFFICE
KOLKATA, 07/11/2014
Address of the Patent Offices/Jurisdictions
The following are addresses of all the Patent Offices located at different places having their Territorial Jurisdiction on a Zonal basis as shown below:-

1	Office of the Controller General of Patents, Designs & Trade Marks, Boudhik Sampada Bhavan, Near Antop Hill Post Office,S.M.Road,Antop Hill, Mumbai – 400 037 Phone: (91)(22) 24123311, Fax : (91)(22) 24123322 E-mail: cgpdtm@nic.in	4	The Patent Office, Government of India, Intellectual Property Rights Building, G.S.T. Road, Guindy, Chennai – 600 032. Phone: (91)(44) 2250 2081-84 Fax : (91)(44) 2250 2066 E-mail: chennai-patent@nic.in ❖ The States of Andhra Pradesh, Karnataka, Kerala, Tamil Nadu and the Union Territories of Puducherry and Lakshadweep.
2	The Patent Office, Government of India, Boudhik Sampada Bhavan, Near Antop Hill Post Office,S.M.Road,Antop Hill, Mumbai – 400 037 Phone: (91)(22) 24137701 Fax: (91)(22) 24130387 E-mail: mumbai-patent@nic.in ❖ The States of Gujarat, Maharashtra, Madhya Pradesh, Goa and Chhattisgarh and the Union Territories of Daman and Diu & Dadra and Nagar Haveli	5	The Patent Office (Head Office), Government of India, Boudhik Sampada Bhavan, CP-2, Sector –V, Salt Lake City, Kolkata- 700 091 Phone: (91)(33) 2367 1943/44/45/46/87 Fax: (91)(33) 2367 1988 E-Mail: kolkata-patent@nic.in ❖ Rest of India
3	The Patent Office, Government of India, Boudhik Sampada Bhavan, Plot No. 32., Sector-14, Dwarka, New Delhi – 110075 Phone: (91)(11) 2808 1921 – 25 Fax: (91)(11) 2808 1920 & 2808 1940 E.mail: delhi-patent@nic.in ❖ The States of Haryana, Himachal Pradesh, Jammu and Kashmir, Punjab, Rajasthan, Uttar Pradesh, Uttaranchal, Delhi and the Union Territory of Chandigarh.		

Website: www.ipindia.nic.in
www.patentoffice.nic.in

All applications, notices, statements or other documents or any fees required by the Patents Act, 1970 and The Patents (Amendment) Act, 2005 or by the Patents (Amendment) Rules, 2006 will be received only at the appropriate offices of the Patent Office.

Fees: The Fees may either be paid in cash or may be sent by Bank Draft or Cheques payable to the Controller of Patents drawn on a scheduled Bank at the place where the appropriate office is situated.

पेटेंट कार्यालय

कोलकाता, दिनांक 07/11/2014

क्कार्यालयों के क्षेत्राधिकार के पते

विभिन्न जगहों पर स्थित पेटेंट कार्यालय के पते आंचलिक आधार पर दर्शित उनके प्रादेशिक अधिकार क्षेत्र के साथ नीचे दिए गए है:-

1	कार्यालय : महानियंत्रक, एकस्व, अभिकल्प तथा व्यापार चिह्न, एंटोप हिल डाकघर के समीप, एस. एम. रोड, एंटोप हिल, मुम्बई- 400 037, भारत, फोन: (91) (22) 24123311 फ़ैक्स: (91) (22) 24123322 ई. मेल: cgpdtm@nic.in	4	पेटेंट कार्यालय, भारत सरकार इंटेलेक्चुअल प्रॉपर्टी राइट्स बिल्डिंग, इंडस्ट्रियल इस्टेट एसआईडीसीओ आरएमडी गोडाउन एरिया एडजसेन्ट टु ईगल फ्लास्क, जी. एस. टी. रोड, गायन्डी चेन्नई - 600 032. फोन: (91)(44) 2250 2081-84 फ़ैक्स: (91)(44) 2250-2066 ई. मेल: chennai-patent@nic.in ❖ आन्ध्र प्रदेश, कर्नाटक, केरल, तमिलनाडु तथा पुडुचेरी राज्य क्षेत्र एवं संघ शासित क्षेत्र, लक्षदीप
2	पेटेंट कार्यालय, भारत सरकार बौद्धिक संपदा भवन, एंटोप हिल डाकघर के समीप, एस. एम. रोड, एंटोप हिल, मुम्बई- 400 037, फोन: (91) (22) 24137701 फ़ैक्स: (91) (22) 24130387 ई. मेल: Mumbai-patent@nic.in ❖ गुजरात, महाराष्ट्र, मध्य प्रदेश, गोवा तथा छत्तीसगढ़ राज्य क्षेत्र एवं संघ शासित क्षेत्र, दमन तथा दीव, दादर और नगर हवेली.	5	पेटेंट कार्यालय, भारत सरकार कोलकाता, (प्रधान कार्यालय) बौद्धिक संपदा भवन, सीपी-2, सेक्टर- V, साल्ट लेक सिटी, कोलकाता-700 091, भारत. फोन: (91)(33) 2367 1943/44/45/46/87 फ़ैक्स:/Fax: (91)(33) 2367 1988 ई. मेल: kolkata-patent@nic.in ❖ भारत का अवशेष क्षेत्र
3	पेटेंट कार्यालय, भारत सरकार बौद्धिक संपदा भवन, प्लॉट सं. 32, सेक्टर- 14, द्वारका, नई दिल्ली- 110 075. फोन: (91)(11) 2808 1921-25 फ़ैक्स: (91)(11) 2808 1920, 2808 1940 ई. मेल: delhi-patent@nic.in हरियाणा, हिमाचल प्रदेश, जम्मू तथा कश्मीर, पंजाब,राजस्थान, उत्तर प्रदेश, दिल्ली तथा उत्तरांचल राज्य क्षेत्रों, एवं संघ शासित क्षेत्र चंडीगढ़		

वेबसाइट: **http://www.ipindia.nic.in**

www.patentoffice.nic.in

पेटेंट अधिनियम, 1970 तथा पेटेंट (संशोधन) अधिनियम, 2005 अथवा पेटेंट (संशोधन) नियम, 2006 द्वारा वांछित सभी आवेदन, सूचनाए, विवरण या अन्य दस्तावेज़ या कोई शुल्क पेटेंट कार्यालय के केवल उपयुक्त कार्यालय में स्वीकृत होंगे।

शुल्क: शुल्क या तो नगद रूप में या Controller of Patents के नाम में देय बैंक ड्राफ्ट या चेक के द्वारा भेजी जा सकती है जो उसी स्थान के किसी अनुसूचित बैंक में प्रदत्त हो जहाँ उपयुक्त कार्यालय स्थित है ।

SPECIAL NOTICE

18 Months publication as required under Section 11A of the Patents Act, 1970 as amended by the Patents (Amendment) Act, 2005.

Notice is hereby given that any person at any time before the grant of Patent may give representation by way of opposition to the Controller of Patents at appropriate office on the ground and in a manner specified under section 25(1) of the Patents (Amendment) Act, 2005 read with Rule 55 of the Patents (Amendment) Rules, 2006.

Notice is also given that if any interested person requests for copies of the complete specification, drawing and abstract of any application already published, the photocopy of the same can be supplied by the Patent Office as per the jurisdiction on payment of prescribed fees of Rs.8/- per page. If any further details are required to be obtained, the same can be provided by the respective Patent Offices on request.

(**Chaitanya Prasad**)
CONTROLLER GENERAL OF PATENTS, DESIGNS & TRADE MARKS

SPECIAL NOTICE

Under the new provision of the Patents Act, 1970 as amended by the Patents (Amendment) Act, 2005 and Rules there under, Publication of the matter relating to Patents in the Official Gazette of India Part III, Section 2 has been discontinued and instead The Official Journal of the Patent Office is being published containing all the activities of The Patent Office such as publication of all the patent applications after 18th months , grant of patents & all other information in respect of the proceedings as required under the provisions of the Patents (Amendment) Act, 2005 and Rules thereunder on weekly basis on every **Friday**.

The Journal is uploaded in the website every Friday. So Paper form and CD-ROM form of the Journal are discontinued from 01/01/2009.

SPECIAL NOTICE

Every effort is being taken to publish all the patent applications under section 11(A) of the Patents Act. However, if duplication of publication of any application is found, then earlier date of publication will be taken for the purpose of provisional protection for applicant and Patent Office will grant Patent not before six months from the date of second publication, provided that there is there is no third party representation.

Early Publication:

The following patent applications have been published under section 11A (2) of The Patents (Amendment) Act 2005 and rule 24A of The Patents (Amendment) Rules, 2006. Any person may file representation by way of opposition to the Controller of Patents at the appropriate office against the grant of the patent in the prescribed manner under section 25(1) of the Patents (Amendment) Act 2005 read with the rule 55 of The Patents (Amendment) Rules, 2006:

(12) PATENT APPLICATION PUBLICATION

(21) Application No.2835/MUM/2014 A

(19) INDIA

(22) Date of filing of Application :05/09/2014

(43) Publication Date : 07/11/2014

(54) Title of the invention : SYSTEM AND METHOD FOR DEPTH ESTIMATION OF STEREO IMAGES

(51) International classification	:G06K9/46, G01C3/14, H04N13/00
(31) Priority Document No	:NA
(32) Priority Date	:NA
(33) Name of priority country	:NA
(86) International Application No	:NA
Filing Date	:NA
(87) International Publication No	: NA
(61) Patent of Addition to Application Number	:NA
Filing Date	:NA
(62) Divisional to Application Number	:NA
Filing Date	:NA

(71)**Name of Applicant :**

1)G.N Mulay

Address of Applicant :6-Manas Apartment, Manas Lane, Kale Path, 830-B, Bhandarkar Road, Pune Maharashtra India

2)Apurva Naik

3)Arti Khaparde

(72)**Name of Inventor :**

1)Keshav Velhal

2)Kunal Shah

3)Akshay Yembarwar

4)Yogesh Patki

5)Sagar Pokale

6)Swapnil Nalawade

7)Tejas Nehete

8)Shubham Naik

9)Gaurav Pilankar

(57) Abstract :

Disclosed are a system (100) and a method (200) for depth estimation of stereo images. The system (100) comprises at least two imaging devices (10), an encoding module (20), a first transmitting module (30), a first receiving module (40), a decoding module (50), a segmentation module (60), a disparity and depth estimation module (70), a second transmitting module (80) and a second receiving module (90). The system (100) and the method (200) involve encoding and segmentation of image data to reduce memory requirements, data loss and time taken during transmission thereby improving the speed of processing. The estimated depth data from the real time stereo images is useful in computer vision and various other applications.

No. of Pages : 20 No. of Claims : 6

(12) PATENT APPLICATION PUBLICATION
(19) INDIA
(22) Date of filing of Application :16/10/2014
(21) Application No.3301/MUM/2014 A
(43) Publication Date : 07/11/2014

(54) Title of the invention : FOLDABLE BULK GRAIN STORAGE SYSTEM

(51) International classification	:B65D88/16, B65G 3/00
(31) Priority Document No	:NA
(32) Priority Date	:NA
(33) Name of priority country	:NA
(86) International Application No	:NA
Filing Date	:NA
(87) International Publication No	: NA
(61) Patent of Addition to Application Number	:NA
Filing Date	:NA
(62) Divisional to Application Number	:NA
Filing Date	:NA

(71)**Name of Applicant :**
1)DEKATE RAVINDRA
Address of Applicant :218, MIG-II, HUDCO, BHILAI NAGAR, CHHATTISGARH 490009, INDIA
(72)**Name of Inventor :**
1)DEKATE RAVINDRA

(57) Abstract :
The Foldable Bulk Grain Storage System provides a truly portable foldable and collapsible structure. The main purpose of foldable storage system is to be able to store bulk grain at a desired location with taking up less space and storage is as quick as possible. The system is designed keeping in mind the need of portable storage system. The installation process is very quick. It has the property to be able to fold and unfold itself. Due to which it is easily transportable hence fulfilling the need for portability. It is designed in two versions; horizontal and vertical, keeping in mind the space, which may vary from location to location. In the horizontal version when the grain starts filling the storage bag it expands simultaneously or in case of unloading of grain from storage bag it folds simultaneously. Whereas in the vertical version, the storage bag needs to be expanded first and then filled. Along with the two portable storage systems, there are systems designed to support the loading and unloading process of grain storage bags. All the loaders and unloaders are designed with screw and bucket elevator conveyor mechanism. The conveyor line is in an enclosed surrounding for environment friendly and cost efficient operation. It is configured in such a way as to create negative pressure in the system and avoid dust leakage or spillage at connection and transfer points, resulting in an environment friendly and cost efficient operation. Maintenance and spare part costs are kept to a minimum, as the road-mobile loader and unloader largely incorporate standard components. Also, staffing costs are low as only one person is required to operate the bulk grain handling road-mobile equipment And because the equipments are environment friendly, they can be deployed in a pollution sensitive site or site close to populated areas. They are mounted on semi-trailer, making them fully portable. Designed with a hydraulic system, it enables them to fold itself for transportation and storage purposes. The time it takes for the folding and unfolding process to occur is short and quick. The storage bags are made up of foldable coated steel structure and fabric. The fabric is water resistant, fire resistant, chemical resistant, and high tearing strength. The storage solution is very flexible and the length can be adjusted into different sizes for storing different products, such as grain, seed, etc.

No. of Pages : 42 No. of Claims : 7

(12) PATENT APPLICATION PUBLICATION
(19) INDIA
(22) Date of filing of Application :08/08/2014

(21) Application No.2565/MUM/2014 A
(43) Publication Date : 07/11/2014

(54) Title of the invention : A PROCESS FOR PREPARING SUBSTITUTED ALKYL PHENOLS

(51) International classification	:C07C37/16, C07C37/56
(31) Priority Document No	:NA
(32) Priority Date	:NA
(33) Name of priority country	:NA
(86) International Application No	:NA
Filing Date	:NA
(87) International Publication No	: NA
(61) Patent of Addition to Application Number	:NA
Filing Date	:NA
(62) Divisional to Application Number	:NA
Filing Date	:NA

(71)**Name of Applicant :**
1)DEEPAK NITRITE LIMITED
Address of Applicant :9/10, Kunj Society, R C Dutt Road, Alkapuri, Vadodara, Gujarat -390005, India
(72)**Name of Inventor :**
1)H.B. Pancholi
2)R.P.Ughade
3)S.A .Sadaphal

(57) Abstract :
The present invention relates to a process for preparing substituted alkyl phenols. The process comprises the steps of salt formation, diazotization, hydrolysis to obtain an organic phase comprising of substituted alkyl phenols and effluent phase. The effluent phase is recycled back to all or any of the steps of salt formation, diazotization or hydrolysis.

No. of Pages : 19 No. of Claims : 22

(12) PATENT APPLICATION PUBLICATION
(19) INDIA
(22) Date of filing of Application :20/10/2014

(21) Application No.3340/MUM/2014 A
(43) Publication Date : 07/11/2014

(54) Title of the invention : SCALE WITH SLIDING COMPASS

(51) International classification	:B43L 9/02, B43L 7/14	(71)**Name of Applicant :** **1)SHARMA AKASH R.** Address of Applicant :H. NO.2020, KALIKANAGAR, SHIRDI, TAL. RAHATA, DIST. AHMEDNAGAR - 423 109, MAHARASHTRA, INDIA.
(31) Priority Document No	:NA	
(32) Priority Date	:NA	(72)**Name of Inventor :** **1)SHARMA AKASH R.**
(33) Name of priority country	:NA	
(86) International Application No	:NA	
Filing Date	:NA	
(87) International Publication No	: NA	
(61) Patent of Addition to Application Number	:NA	
Filing Date	:NA	
(62) Divisional to Application Number	:NA	
Filing Date	:NA	

(57) Abstract :
A scale with slider compass unit consists of 1, basic structure which provides slot for sliding of separable subassembly 2, includes the pencil holder 3 to hold back the pencil still and 4 to engage subassembly 2 with 1, unit 5 is detachable pin unit which provides a reference point to the compass, unit 1 or 1-2 acts as simple scale and 1-2-5 completes whole assembly which is used as compass.

No. of Pages : 10 No. of Claims : 3

(12) PATENT APPLICATION PUBLICATION
(19) INDIA
(22) Date of filing of Application :20/10/2014

(21) Application No.3346/MUM/2014 A
(43) Publication Date : 07/11/2014

(54) Title of the invention : MECHANICAL DEVICE FOR ERECTING WALL OF BRICKS AND ALIKE.

(51) International classification :E04G21/22
(31) Priority Document No :NA
(32) Priority Date :NA
(33) Name of priority country :NA
(86) International Application No :NA
Filing Date :NA
(87) International Publication No : NA
(61) Patent of Addition to Application Number :NA
Filing Date :NA
(62) Divisional to Application Number :NA
Filing Date :NA

(71)**Name of Applicant :**
1)dr. jayendra kantilal piipaliya
Address of Applicant :101, sai palace, opp. mother mary school, shree prasth 2nd road,nallasopara west Maharashtra India
(72)**Name of Inventor :**
1)dr.jayendra kantilal pipaliya

(57) Abstract :
This is a simple mechanical device for erecting wall of bricks and alike, which is simple, easy to operate even with unskilled labor, save lot of time and labor, ultimately reducing overall cost of construction.

No. of Pages : 8 No. of Claims : 6

(12) PATENT APPLICATION PUBLICATION
(19) INDIA
(22) Date of filing of Application :27/10/2014

(21) Application No.3398/MUM/2014 A
(43) Publication Date : 07/11/2014

(54) Title of the invention : DEVELOPMENT OF PIEZO-WHEEL FOR ELECTRIC VEHICLE

(51) International classification	:H01L 41/18, H01L41/113
(31) Priority Document No	:NA
(32) Priority Date	:NA
(33) Name of priority country	:NA
(86) International Application No	:NA
Filing Date	:NA
(87) International Publication No	: NA
(61) Patent of Addition to Application Number	:NA
Filing Date	:NA
(62) Divisional to Application Number	:NA
Filing Date	:NA

(71)**Name of Applicant :**
1)Aware Mohan Vithalarao
Address of Applicant :Professor, Electrical Engineering dept. Visvesvaraya National Institute of technology, south ambazari road, Nagpur- 440010 Maharashtra India
2)Dr. Pattnaik Swapnajit
(72)**Name of Inventor :**
1)Aware Mohan Vithalarao
2)Dr. Pattnaik Swapnajit

(57) Abstract :
The invention relates to the principle of piezoelectric effect that can be utilized in electric vehicle to provide alternative energy system to the current conventional energy system in vehicle. The invented system helps to boost up the green revolution. The simple modification in the present wheel of vehicle yields several advantages such as cheap, safe, maintenance free, flexible, and can be used in various occasions. Following invention is described in detail with the help of figure 2 a showing the schematic views of piezo-wheel used and figure 2 b showing how the PZTs are placed over the rim of a wheel.

No. of Pages : 16 No. of Claims : 5

(12) PATENT APPLICATION PUBLICATION
(19) INDIA
(22) Date of filing of Application :17/10/2014
(21) Application No.3316/MUM/2014 A
(43) Publication Date : 07/11/2014

(54) Title of the invention : A NOVEL METHOD OF USING WASTE VEGETABLE OIL AS GREEN ALTERNATIVE FUEL FOR DIESEL ENGINE

(51) International classification	:C10L 1/00, C10L 9/00
(31) Priority Document No	:NA
(32) Priority Date	:NA
(33) Name of priority country	:NA
(86) International Application No	:NA
Filing Date	:NA
(87) International Publication No	: NA
(61) Patent of Addition to Application Number	:NA
Filing Date	:NA
(62) Divisional to Application Number	:NA
Filing Date	:NA

(71)**Name of Applicant :**
1)Dr. Nitin Shrivastava
Address of Applicant :Assistant Professor Dept of Mechanical Engineering University Institute of Technology Rajiv Gandhi Proudyogiki Vishwavidyalaya, Airport Bypass Road, Gandhi Nagar, Bhopal, Madhya Pradesh 462036 India
(72)**Name of Inventor :**
1)Dr. Nitin Shrivastava

(57) Abstract :
The present invention relates to method to use fuel prepared from vegetable oil. More particularly, present invention relates to preparation of fuel emulsion of water and waste vegetable oil, blended with alcohol, with exhaust gas recirculation to reduce emission especially NOx. Also, the present invention discloses an internal combustion engine wherein exhaust gases are recirculated to reduce NOx emissions.

No. of Pages : 21 No. of Claims : 18

(12) PATENT APPLICATION PUBLICATION
(19) INDIA
(22) Date of filing of Application :13/10/2014

(21) Application No.3235/MUM/2014 A
(43) Publication Date : 07/11/2014

(54) Title of the invention : APPARATUS AND METHOD FOR DEPLOYING A LIFE RAFT

(51) International classification	:B63C9/04, B63B 23/00
(31) Priority Document No	:NA
(32) Priority Date	:NA
(33) Name of priority country	:NA
(86) International Application No	:NA
Filing Date	:NA
(87) International Publication No	: NA
(61) Patent of Addition to Application Number	:NA
Filing Date	:NA
(62) Divisional to Application Number	:NA
Filing Date	:NA

(71)**Name of Applicant :**
1)KIRTIMAN THAKUR
Address of Applicant :MITHUN 7H, NEW NAVY NAGAR, NEAR R C CHURCH, COLABA, MUMBAI-400005, MAHARASHTRA, INDIA.
(72)**Name of Inventor :**
1)KIRTIMAN THAKUR

(57) Abstract :
An apparatus and method for deploying a life raft comprising air bottles, non-return manually operated safety valve, pneumatic pipelines, pressure vessel, manually operated valves, cylinders having pistons and hydraulic pipelines connected to a hydraulic unit having hydraulic pumps, arms and a hook to which is attached a life raft. On opening the manually operated safety valve, compressed air from the bottles enters the pressure vessel and travels to manually operated valves through pneumatic pipelines. On opening the manually operated valves, compressed air strikes the pistons inside the cylinders thereby exerting pressure on the hydraulic fluid in the hydraulic pipelines. The hydraulic pipelines transmit the hydraulic pressure generated to the hydraulic unit thereby actuating the arms to position the attached life raft in position for deployment and disengaging the hook to release the life raft into the sea. The apparatus may be automated by providing for solenoid valves in bypass pipelines.

No. of Pages : 18 No. of Claims : 11

(12) PATENT APPLICATION PUBLICATION
(19) INDIA
(22) Date of filing of Application :31/10/2013
(21) Application No.3464/MUM/2013 A
(43) Publication Date : 07/11/2014

(54) Title of the invention : AN UNDERGROUND TRANSPORT SYSTEM

(51) International classification	:B61D11/00,B61B13/10, B61B9/00
(31) Priority Document No	:NA
(32) Priority Date	:NA
(33) Name of priority country	:NA
(86) International Application No	:NA
Filing Date	:NA
(87) International Publication No	: NA
(61) Patent of Addition to Application Number	:NA
Filing Date	:NA
(62) Divisional to Application Number	:NA
Filing Date	:NA

(71)**Name of Applicant :**
1)MAHIDHAR, PANKAJ CHANDRAKANT
Address of Applicant :37, JANSUKH NIWAS, KASTURBA ROAD, KANDIVLI (WEST), MUMBAI 400067, MAHARASHTRA, INDIA.
(72)**Name of Inventor :**
1)MAHIDHAR, PANKAJ CHANDRAKANT

(57) Abstract :
India has a vast network of railways. The rail network stands fourth in the world where there are growing numbers in passenger travelling as well as freight transport. In order to fulfil the need for quick freight transportation across the country, an underground freight transport system is described herein. It comprises a moving unit travelling through an underground concrete pipeline/tunnel and one or more controlling station. The moving unit consists of at least one rolling stock running on at least two drive tracks beneath the rolling stock and a guide & power track above the rolling stock for powering the rolling stock. Wheels are provided to the rolling stock for running on the tracks. Each of the rolling stock contains a RFID tag for monitoring purpose.

No. of Pages : 10 No. of Claims : 8

(12) PATENT APPLICATION PUBLICATION
(19) INDIA
(22) Date of filing of Application :17/10/2014
(21) Application No.3321/MUM/2014 A
(43) Publication Date : 07/11/2014

(54) Title of the invention : A SYSTEM FOR CENTRALLY MANAGING AND CONTROLLING AT LEAST ONE AC AND DC POWERED END POINT UNITS

(51) International classification	:H02J 1/00, H02J3/28
(31) Priority Document No	:NA
(32) Priority Date	:NA
(33) Name of priority country	:NA
(86) International Application No	:NA
Filing Date	:NA
(87) International Publication No	: NA
(61) Patent of Addition to Application Number	:NA
Filing Date	:NA
(62) Divisional to Application Number	:NA
Filing Date	:NA

(71)**Name of Applicant :**
1)NITIN PRABHAKAR NISTANE
Address of Applicant :PLOT 3 S-3 II FLOOR, SNEH SAFALYA APARTMENTS, OPP. HOTEL RADISSON WARDHA ROAD, NAGPUR 440 015, MAHARASHTRA, INDIA
2)KANCHAN NITIN NISTANE
(72)**Name of Inventor :**
1)NITIN PRABHAKAR NISTANE
2)KANCHAN NITIN NISTANE

(57) Abstract :
Disclosed is a system for centrally managing and controlling at least one AC and DC powered end point unit, the system comprising: a power supplying equipment (PSE) unit; a power and signal carrying unit; the at least one powered end point (PD) unit consisting of an AC powered LED light point unit (PD-LED) and DC powered LED light point unit (PoE-PD-LED); an AC powered device controller unit (PDC-AC); a DC powered device controller unit (PDC-DC); at least one bridge unit; at least one distributor unit comprising of an interface to connect to the power and signal carrying unit operating at 110-220VAC, single phase and three phases, the distributor unit is configured to bridge each phase between the 110-220 VAC and Ethernet and extract all control and data signals from the 110-220VAC power system, effectively preventing data and control signal to cross the physical boundary of the intended user; and a central control and management unit being connected to the powered end point (PD) unit, AC powered device controller unit (PDC-AC), DC powered device controller unit (PDC-DC), bridge unit, distributor unit, external devices and sensors and configured for centralized control and management of the powered end point (PD) unit, AC powered device controller unit (PDC-AC), DC powered device controller unit (PDC-DC), bridge unit, distributor unit, external devices and sensors connected among each other on wired and wireless media, through the power and signal carrying unit, the central control and management unit configured to: collect data from the powered end point (PD) unit, AC powered device controller unit (PDC-AC), DC powered device controller unit (PDC-DC), bridge unit, and distributor unit and process the data for the purpose of intelligence gathering and decision making, control and manage operations of the powered end point (PD) unit, AC powered device controller unit (PDC-AC), DC powered device controller unit (PDC-DC), bridge unit, and distributor unit, based on the collected data, control and manage operations of at least one external device or sensor connected to the powered end point (PD) unit, AC powered device controller unit (PDC-AC), DC powered device controller unit (PDC-DC), bridge unit, and distributor unit based on the collected data.

No. of Pages : 38 No. of Claims : 27

(12) PATENT APPLICATION PUBLICATION
(19) INDIA
(22) Date of filing of Application :22/07/2013
(21) Application No.2446/MUM/2013 A
(43) Publication Date : 07/11/2014

(54) Title of the invention : COTTON PLUG MACHINE

(51) International classification	:B23P19/04, B65B61/22
(31) Priority Document No	:NA
(32) Priority Date	:NA
(33) Name of priority country	:NA
(86) International Application No	:NA
Filing Date	:NA
(87) International Publication No	: NA
(61) Patent of Addition to Application Number	:NA
Filing Date	:NA
(62) Divisional to Application Number	:NA
Filing Date	:NA

(71)**Name of Applicant :**
1)ETI RAJIV MEHROTRA
Address of Applicant :PLOT NO. N-9, UTKARSH ROHINI APT., AATH RASTA SQ., BESIDES SUDDOUL GYM, LAXMI NAGAR, NAGPUR- (MAHARASHTRA), 440010, INDIA.
(72)**Name of Inventor :**
1)ETI RAJIV MEHROTRA

(57) Abstract :
A sterlised cotton plug machine runs on a 9 volt DC motor having a rear setup and a front setup wherein initially the raw cotton is separated from the seeds in the rear cultivation blade shaft chamber and thereafter the cotton is pressed into a uniform sheet by passing it through a casting roller. The cotton sheet thereafter enters the front setup where it meets a cotton thread rotating on its axis with a pair of gear assemblies at both the ends due to centrifugal force. The entire machine works smoothly because of the unique interlocking assembly of the gears in the front and back machine setup. The rotating movement transforms the cotton sheet into a cotton plug which is simultaneously treated by a infra blue light to make it disinfectant. The plug is then cut by the cutter attached at both the ends of the cotton thread upon which the plug so formed rests on the industrial blanket which is pasted upon the lifting plate ready to be used. The machine can be configurated for making multiple cotton plugs.

No. of Pages : 17 No. of Claims : 8

(12) PATENT APPLICATION PUBLICATION
(19) INDIA
(22) Date of filing of Application :14/10/2014

(21) Application No.3284/MUM/2014 A
(43) Publication Date : 07/11/2014

(54) Title of the invention : LAPTOP COOLER

(51) International classification	:H01L23/427, G06F1/20
(31) Priority Document No	:NA
(32) Priority Date	:NA
(33) Name of priority country	:NA
(86) International Application No	:NA
Filing Date	:NA
(87) International Publication No	: NA
(61) Patent of Addition to Application Number	:NA
Filing Date	:NA
(62) Divisional to Application Number	:NA
Filing Date	:NA

(71)**Name of Applicant :**
1)Vikram Sunil Sarode
Address of Applicant :Bhawsarpura, Barshitakli, Tal. Barshitakli, Dist. Akola.Pin 44401 Maharashtra India
(72)**Name of Inventor :**
1)Vikram Sunil Sarode

(57) Abstract :
Present invention provides laptop cooler which is used to reduce or remove the heat from the base of the laptop. The concept is executed by using the box having the dimensions suitable to the laptop, which is generally used with size of 15.6 inch. The concept/hardware having one tub for store of liquid, motor for the particular liquid, copper tube, exhaust fan/fans and circuit. This is the more efficient as compare to the ordinary coolers available in the market, with 2 steps of speed for cooling and the input is taken from the port/ports of laptop. There is one inlet for the liquid, which can be easily available at home or carry with box. And one outlet which is to remove that liquid while the task is completed and when no need to more cool it. There are 4 ventilations. And finally two exhaust fans attached to the outer fiber pad. Following invention is described in detail with the help of Figure 1 of sheet 1 showing the internal structure of laptop cooler.

No. of Pages : 14 No. of Claims : 4

(12) PATENT APPLICATION PUBLICATION
(19) INDIA
(22) Date of filing of Application :30/09/2014
(21) Application No.3119/MUM/2014 A
(43) Publication Date : 07/11/2014

(54) Title of the invention : A SHEATH ASSEMBLY FOR DIFFERENT FIELDS OF ENDOSCOPIC SURGERY INVOLVING SUCTION, IRRIGATION AND MATERIAL REMOVAL

(51) International classification	:A61B17/34, A61B10/06
(31) Priority Document No	:NA
(32) Priority Date	:NA
(33) Name of priority country	:NA
(86) International Application No	:NA
Filing Date	:NA
(87) International Publication No	: NA
(61) Patent of Addition to Application Number	:NA
Filing Date	:NA
(62) Divisional to Application Number	:NA
Filing Date	:NA

(71)**Name of Applicant :**
1)SHAH, DR. KAUSHIKKUMAR VALLABHADAS
Address of Applicant :Varun Kidney Hospital & Prasutigruh Near Sneh Sankul Wadi, Anandmahal Road, Adajan, Surat-395009 Gujarat, India
(72)**Name of Inventor :**
1)SHAH, DR. KAUSHIKKUMAR VALLABHADAS

(57) Abstract :
A sheath assembly for different fields of endoscopic surgery involving suction, irrigation and material removal which would on one hand enable reducing the size of keyhole to do the endoscopic surgery making it minimally invasive surgery, minimal damage to surrounding organ and practically no bleeding, faster recovery and early discharge and yet on the other hand provide for the advantages of big hole surgery. The sheath assembly of the invention would enable using variety of sheath sizes of different length and width of working sheath and thus facilitate applying to neonates as well as morbidly obese patients. The sheath assembly would enable endoscopic surgery such as percutaneous renal surgery with even about 3.0 mm inner diameter tubular sheath for large varieties of stones which would further add comfort and extra safety both for the patient as well as the surgeons.

No. of Pages : 27 No. of Claims : 21

(12) PATENT APPLICATION PUBLICATION
(19) INDIA
(22) Date of filing of Application :20/10/2014
(21) Application No.3350/MUM/2014 A
(43) Publication Date : 07/11/2014

(54) Title of the invention : A SOLAR PHOTOVOLTAIC SYSTEM

(51) International classification	:G05F1/67, H02M7/44
(31) Priority Document No	:NA
(32) Priority Date	:NA
(33) Name of priority country	:NA
(86) International Application No	:NA
Filing Date	:NA
(87) International Publication No	: NA
(61) Patent of Addition to Application Number	:NA
Filing Date	:NA
(62) Divisional to Application Number	:NA
Filing Date	:NA

(71)**Name of Applicant :**
1)Dr. Anil Kumar
Address of Applicant :Assistant professor, Energy Centre (Department of Mechanical Engineering), Maulana Azad National Institute of Technology, Bhopal 462003 Madhya Pradesh India
2)Uzma Qureshi
3)Mohammed Amaan
(72)**Name of Inventor :**
1)Dr. Anil Kumar
2)Uzma Qureshi
3)Mohammed Amaan

(57) Abstract :
Present invention relates to solar photovoltaic system. More particularly, present invention relates to a compact solar energy based system which provides hot air and hot water with enhanced DC power generation from photovoltaic system for cold regions. System of present invention is designed for optimum conversion of incident solar energy on panel to thermal and electrical energy.

No. of Pages : 10 No. of Claims : 8

(12) PATENT APPLICATION PUBLICATION
(19) INDIA
(22) Date of filing of Application :27/10/2014
(21) Application No.3403/MUM/2014 A
(43) Publication Date : 07/11/2014

(54) Title of the invention : AN IMPROVED METHOD OF THREAD GRINDING

(51) International classification	:B24B19/02, B23G 1/36
(31) Priority Document No	:NA
(32) Priority Date	:NA
(33) Name of priority country	:NA
(86) International Application No	:NA
Filing Date	:NA
(87) International Publication No	: NA
(61) Patent of Addition to Application Number	:NA
Filing Date	:NA
(62) Divisional to Application Number	:NA
Filing Date	:NA

(71)**Name of Applicant :**
1)VISHNU VASUDEO MUJUMDAR
Address of Applicant :INSTITUTE OF APPLIED RESEARCH, J-297, MIDC, NEAR INDRAYANI NAGAR, BHOSARI, PUNE-411026, MAHARASHTRA, INDIA.
(72)**Name of Inventor :**
1)VISHNU VASUDEO MUJUMDAR

(57) Abstract :
The improved method of thread grinding is described by the present invention. The method for internal or external thread grinding proposed by the present invention comprises the steps of; dressing the grinding wheel (1) to obtain a desired thread profile by the hard part tool (2) mounted on hard part tool holder (6); grinding the workpiece by dressed grinding wheel (1) wherein the Y-axis of the quill (7) is parallel to the workpiece; the said Y- axis of the quill (7) makes an angle β with X- axis of the grinding wheel (9) wherein; the angle β is 90 degrees. The required thread profile of the workpiece is achieved before the actual grinding operation by dressing the grinding wheel with a hard part tool made of diamond/hard graphite material and follows the trajectory path (same as work piece).

No. of Pages : 18 No. of Claims : 5

(12) PATENT APPLICATION PUBLICATION
(19) INDIA
(22) Date of filing of Application :27/10/2014
(21) Application No.3391/MUM/2014 A
(43) Publication Date : 07/11/2014

(54) Title of the invention : METHOD AND EQUIPMENT FOR SAFE SPEED RECOMMENDATION SYSTEM OF THE VEHICLE.

(51) International classification	:B60W30/14, G08G1/09,G06F19/00
(31) Priority Document No	:NA
(32) Priority Date	:NA
(33) Name of priority country	:NA
(86) International Application No	:NA
Filing Date	:NA
(87) International Publication No	: NA
(61) Patent of Addition to Application Number	:NA
Filing Date	:NA
(62) Divisional to Application Number	:NA
Filing Date	:NA

(71)**Name of Applicant :**
1)JIRGE MONISH BIPINCHANDRA
Address of Applicant :FLAT NO.401, GAUTAMI APT. NEAR ZILLA PARISHAD, NAGALA PARK, KOLHAPUR 416003 Maharashtra India
(72)**Name of Inventor :**
1)JIRGE MONISH BIPINCHANDRA

(57) Abstract :
The method and equipment used for recommending Safe Driving Speed at given driving condition. The Safe Speed Recommendation System has been designed mainly to fulfil the need of the safety of the driver/passengers. The system gets inputs from many necessary important driving-; vehicle-; atmospheric-; geographical parameters, which are important for safe driving. The safe recommended speed will be then calculated as per system algorithm and displayed in an innovative manner on the analogue and/or digital speedometer.

No. of Pages : 15 No. of Claims : 4

(12) PATENT APPLICATION PUBLICATION
(19) INDIA
(22) Date of filing of Application :16/10/2014

(21) Application No.3305/MUM/2014 A
(43) Publication Date : 07/11/2014

(54) Title of the invention : MICROWAVE SYNTHESIS OF POLYAMIDE HOT MELT ADHESIVE

(51) International classification	:C08G 69/28, C08L 77/00, B32B 27/34
(31) Priority Document No	:NA
(32) Priority Date	:NA
(33) Name of priority country	:NA
(86) International Application No	:NA
Filing Date	:NA
(87) International Publication No	: NA
(61) Patent of Addition to Application Number	:NA
Filing Date	:NA
(62) Divisional to Application Number	:NA
Filing Date	:NA

(71)**Name of Applicant :**
1)MHASKE SHASHANK TEJRAO
Address of Applicant :DEPARTMENT OF POLYMER AND SURFACE ENGINEERING, INSTITUTE OF CHEMICAL TECHNOLOGY, NATHALAL PAREKH MARG, MATUNGA (EAST), MUMBAI - 400019, MAHARASHTRA, INDIA.
(72)**Name of Inventor :**
1)KADAM PRAVIN GOPAL
2)KELKAR SUNDER TUKARAM
3)SAVVASHE PRASHANT BHAIRAVNATH
4)MHASKE SHASHANK TEJRAO

(57) Abstract :
The present invention describes the efficient synthesis of polyamide hot melt adhesive in a microwave process with precise temperature control. Compared to conventional thermal polymerizations process, the microwave, process takes less time and produces hot melt adhesive with equivalent or even superior properties. This is an alternative more efficient process to the classical thermal process.

No. of Pages : 15 No. of Claims : 6

(12) PATENT APPLICATION PUBLICATION
(19) INDIA
(22) Date of filing of Application :23/05/2013
(21) Application No.2245/CHE/2013 A
(43) Publication Date : 07/11/2014

(54) Title of the invention : A DEVICE AND METHOD FOR TRACKING AND PROTECTION OF HIGH VALUED DOCUMENTS

(51) International classification :G07c
(31) Priority Document No :NA
(32) Priority Date :NA
(33) Name of priority country :NA
(86) International Application No :NA
Filing Date :NA
(87) International Publication No : NA
(61) Patent of Addition to Application Number :NA
Filing Date :NA
(62) Divisional to Application Number :NA
Filing Date :NA

(71)**Name of Applicant :**
1)JAYARAMAN SRIRAM
Address of Applicant :NO. 13, SHANMUGAM COLONY, SARADHA MILL ROAD, PODANUR, COIMBATORE 641 023 Tamil Nadu India
(72)**Name of Inventor :**
1)CHETTIPALAYAM MUTHUKRISHNAN JAYARAMAN

(57) Abstract :
An integrated device and method intended for safe and secured maintenance of high valued documents especially involved in huge financial transactions and investment proposals. The device and method, enables the custodian of documents chamber or strong room where the high valued documents are kept upon receipt of high valued documents in original, assign a security clamp encoded with bar codes and bio metric means of identification and retrieval and through the specialized device and method, any individual intending to retrieve the documents must furnish the appropriate, access in form of bio metric identification. The device and method has been incorporated with means for alarming any attempt for unlawful and inappropriate handling of high valued documents and preventing of the documents being taken away from premises from where the documents are intended to be kept in secure condition. Additionally, the device and method also enables, that even within the document chamber, the documents are bunched in the appropriate group, where they were originally assigned and generates alarm in case of improper bunching, thus eliminating confusion while retrieval and enabling retrieval of documents at any required instant without any difficulty.

No. of Pages : 6 No. of Claims : 2

(12) PATENT APPLICATION PUBLICATION
(19) INDIA
(22) Date of filing of Application :10/07/2014
(21) Application No.3417/CHE/2014 A
(43) Publication Date : 07/11/2014

(54) Title of the invention : SOLAR OPERATED SPRAYER WITH MULTI-APPLICATIONS

(51) International classification :b05b
(31) Priority Document No :NA
(32) Priority Date :NA
(33) Name of priority country :NA
(86) International Application No :NA
Filing Date :NA
(87) International Publication No : NA
(61) Patent of Addition to Application Number :NA
Filing Date :NA
(62) Divisional to Application Number :NA
Filing Date :NA

(71)**Name of Applicant :**
1)YALLAPPA D.
Address of Applicant :S/O DENGERU NAGAPPA, 4TH WARD, TELUGARA HONI, ADONI ROAD, RARAVI (P), SIRUGUPPA TALUK, BELLARY DISTRICT, PIN - 583 121 Karnataka India
(72)**Name of Inventor :**
1)YALLAPPA D.

(57) Abstract :
This invention is about a manually operated agricultural pesticide sprayer, which uses solar energy as source of power. It consists of a solar panel of suitable area, a 12V DC battery, charged by solar energy received by the solar panel, a DC motor, operated by the battery, a pump, to spray the pesticide and a tank to hold the pesticide (in the form of solution / liquid). The entire unit is portable and is manually operated (by one person). As the equipment does not use any other external source of power and that it is operated by the user himself, it is quite economical and affordable by small farmers. When not used as a sprayer, its power can also be used for charging the battery of mobile and lighting the CFL bulb etc.

No. of Pages : 10 No. of Claims : 5

(12) PATENT APPLICATION PUBLICATION
(19) INDIA
(22) Date of filing of Application :28/10/2014
(21) Application No.5354/CHE/2014 A
(43) Publication Date : 07/11/2014

(54) Title of the invention : PIT METHOD OF DOCKING AIR CUSHION VEHICLE (HOVERCRAFT)

(51) International classification :b66c
(31) Priority Document No :NA
(32) Priority Date :NA
(33) Name of priority country :NA
(86) International Application No :NA
Filing Date :NA
(87) International Publication No : NA
(61) Patent of Addition to Application Number :NA
Filing Date :NA
(62) Divisional to Application Number :NA
Filing Date :NA

(71)**Name of Applicant :**
1)SUSAMA JENA
Address of Applicant :E-4, COAST GUARD ENCLAVE, NEAR INHS KALYANI, MALKAPURAM, VISAKHAPATNAM - 530 011 Andhra Pradesh India
(72)**Name of Inventor :**
1)SUSAMA JENA

(57) Abstract :
The invention relates to the new method of docking of air cushion vehicle (ACV) normally known as hovercraft for routine inspection of outer surface of bottom of main body and fittings. This is known as pit method of docking hovercraft. ACV is docked for routine inspection of bottom of main body and also to undertake repairs of fittings/cracks on the body. Presently, the craft is docked by lifting it with a crane and placing it on blocks. Also, craft can be raised by hydraulic jacks placed at pre-designated points to facilitate inspection/repairs. The present method has disadvantages like requirement of heavy duty crane which is not readily available at all places and accident due to parting of slings or failure of strong points or failure of hydraulic jacks. Also, each docking by above method costs Rs. 5 to 6 lakhs. Considering the average life of a craft 10 years and docking once in a year, the expenditure on account of docking in the life span of one craft amounts to Rs. 50 to 60 lakhs. The pit method involves making a pit as per dimensions of the craft and covering it with wooden planks or MS plates of suitable thickness. Blocks are arranged as per docking plan and concrete/stone walls are constructed in the pit fore and aft to hold the wooden planks or MS plates. The craft is docked by using engine and guiding lines. The wooden planks or MS plates are removed for inspection/repairs. On completion, wooden planks or MS plates are placed in position and craft is taken out by using engines and guiding lines. This method has advantages like low cost (only one time expenditure of Rs. 3 to 4 lakhs and thereafter minor repairs to the pit) and craft personnel can dock the craft at any time and at any place. The pit once constructed can be used by any number of crafts. Also, this method involves zero risk. The new method is safe, easy to undertake and costs less compared to the conventional method.

No. of Pages : 9 No. of Claims : 12

(12) PATENT APPLICATION PUBLICATION
(19) INDIA
(22) Date of filing of Application :28/10/2014
(21) Application No.5355/CHE/2014 A
(43) Publication Date : 07/11/2014

(54) Title of the invention : PLOTTING / PRINTING COMPASS ROSE FOR REAL TIME FIXES

(51) International classification	:g01c	(71)**Name of Applicant :**
(31) Priority Document No	:NA	**1)SUSAMA JENA**
(32) Priority Date	:NA	Address of Applicant :E-4, COAST GUARD ENCLAVE,
(33) Name of priority country	:NA	NEAR INHS KALYANI, MALKAPURAM,
(86) International Application No	:NA	VISAKHAPATNAM - 530 011 Andhra Pradesh India
Filing Date	:NA	(72)**Name of Inventor :**
(87) International Publication No	: NA	**1)SUSAMA JENA**
(61) Patent of Addition to Application Number	:NA	
Filing Date	:NA	
(62) Divisional to Application Number	:NA	
Filing Date	:NA	

(57) Abstract :
The position of the ship in pilotage waters is ascertained by cross bearings, cross ranges and bearing - range fixes. The fixing team normally takes 2 to 3 minutes to plot a three bearing fix depending on efficiency of the team. The bearing line is drawn by shifting parallel ruler from compass rose to the navigational mark. The procedure has disadvantages - firstly the fixing team normally takes 2 to 3 minutes. While negotiating a restricted or wreck-infested area, the navigator will be interested to get a fix (position) at shorter interval. The existing procedure is unlikely to reduce the time taken for three bearing fix. Secondly, the bearing line is drawn by shifting parallel ruler from compass rose to the navigational mark. Very often error is observed in the position due to backlash error in parallel ruler and shifting of ruler from compass rose to the navigational marks of which bearings have been taken. The above disadvantages can be overcome with the new concept which involves plotting/printing of compass rose on navigational mark. Using compass rose available on navigational mark, the bearing line can be drawn with the help of a scale. Thus, the use of parallel ruler is dispensed with thereby eliminating backlash error and error due to shifting of the ruler, which are major contributors to form a cocked hat/error in position. Also, using compass rose plotted/printed on navigational marks, a navigator can plot a cross bearing fix of three bearing lines in 45 seconds which includes time taken for recording. Hence, almost a real time position is obtained which is required for safe navigation in pilotage or restricted waters. The concept has been found to be very user friendly and easy to plot and use. In order to avoid cluttering of navigational waters, the required sector of the compass rose can be plotted or printed on the mark.

No. of Pages : 5 No. of Claims : 5

(12) PATENT APPLICATION PUBLICATION
(19) INDIA
(22) Date of filing of Application :28/10/2014
(21) Application No.5358/CHE/2014 A
(43) Publication Date : 07/11/2014

(54) Title of the invention : PROCESS OF MAKING POROUS AND NON-POROUS PRODUCTS FORM RE-CYCLED NEWS PRINT PAPER PULP AND CEMENT

(51) International classification :c04b
(31) Priority Document No :NA
(32) Priority Date :NA
(33) Name of priority country :NA
(86) International Application No :NA
Filing Date :NA
(87) International Publication No : NA
(61) Patent of Addition to Application Number :NA
Filing Date :NA
(62) Divisional to Application Number :NA
Filing Date :NA

(71)**Name of Applicant :**
1)GUMMAGATTA LAKSHMAIAH CHANDRASHEKAR
Address of Applicant :NO. 108, 10TH MAIN, 4TH BLOCK, NANDINI LAYOUT, BANGALORE, PIN - 560 096 Karnataka India
(72)**Name of Inventor :**
1)GUMMAGATTA LAKSHMAIAH CHANDRASHEKAR

(57) Abstract :
The invention pertains to the simplified process for making porous and non-porous products from the re-cycled news print pulp and cement materials. The products thus made is far cheaper and finds extensive usage in home and industry. The process of making is simpler and can be adapted easily to make the useful products of porous and non-porous nature from the recycled news print pulp and cement bonding. The process thus achieved would eventually reduce the usage of wood thus saves our forest wealth besides using up the waste products and would give a great fillip to cottage and small scale Industries. The process of making useful products from waste material like re-cycled news print is considered an art and useful to the society. Hence the making of products from recycled news print and cement bonding has a special significance for being ecofriendly.

No. of Pages : 21 No. of Claims : 9

(12) PATENT APPLICATION PUBLICATION
(19) INDIA
(22) Date of filing of Application :13/10/2014
(21) Application No.1038/KOL/2014 A
(43) Publication Date : 07/11/2014

(54) Title of the invention : COMPOSITE LOW CONTACT SUPERIOR NECK IMMOBILIZER AND CONTROLLED NECK TRACTION DEVICE

(51) International classification	:A61F5/042
(31) Priority Document No	:NA
(32) Priority Date	:NA
(33) Name of priority country	:NA
(86) International Application No	:NA
Filing Date	:NA
(87) International Publication No	:NA
(61) Patent of Addition to Application Number	:NA
Filing Date	:NA
(62) Divisional to Application Number	:NA
Filing Date	:NA

(71)**Name of Applicant :**
1)DR.SANDIP CHATTERJEE
Address of Applicant :R.K.M.S.P.V.I.M.S 88 HOSTEL ROOM NO-10, 99 SARAT BOSE ROAD, KOLKATA-26 West Bengal India
(72)**Name of Inventor :**
1)DR. SANDIP CHATTERJEE

(57) Abstract :
Composite low contact improved neck immobilizer and controlled neck traction device work by fixation fixed few bony point in skull base and upper chest, and a spring action broad chin support provides exclusive opportunity for management of patients with neck pain to do neck muscle exercise and controlled neck traction due to resilient spring helps in sprained neck muscle relaxation gradually after hole days hectic activity. Few extra attachment make this device very efficient for management of spinal fracture in road traffic accident and industrial accidents.

No. of Pages : 13 No. of Claims : 8

Publication After 18 Months:

The following Patent Applications have been published under Section 11A (3) of The Patents (Amendment) Act, 2005. Any Person may file representation by way of opposition to the Controller of Patents at the appropriate office against the grant of the patent in the prescribed manner under section 25(1) of the Patents (Amendment) Act, 2005 read with the rule 55 of The Patents (Amendment) Rules, 2006:

(12) PATENT APPLICATION PUBLICATION

(19) INDIA

(21) Application No.10001/DELNP/2012 A

(22) Date of filing of Application :19/11/2012

(43) Publication Date : 07/11/2014

(54) Title of the invention : LITTER BOX ASSEMBLY HAVING A LITTER FRAGMENTING DEVICE

(51) International classification	:A01K29/00
(31) Priority Document No	:61/397541
(32) Priority Date	:11/06/2010
(33) Name of priority country	:U.S.A.
(86) International Application No	:PCT/US2011/000572
Filing Date	:29/03/2011
(87) International Publication No	:WO 2011/155967
(61) Patent of Addition to Application Number	:NA
Filing Date	:NA
(62) Divisional to Application Number	:NA
Filing Date	:NA

(71)**Name of Applicant :**

1)NESTEC S.A.

Address of Applicant :Avenue Nestl 55 CH 1800 Vevey Switzerland

(72)**Name of Inventor :**

1)HUCK Nathan Foster

2)DIXON Dan K.

3)LEIWEKE Michael Edward

4)WURTH Stephen Andrew

(57) Abstract :

The invention provides litter box assemblies useful for managing animal waste. In a general aspect the litter box assembly includes an animal litter box a litter fragmenting device attached to the litter box and an optional hopper attached to the litter fragmenting device. The hopper can store an animal litter that has improved absorption capabilities after being fragmented by the litter fragmenting device. The invention also provides kits useful for making the litter box assemblies and using such litter box assemblies for managing animal waste.

No. of Pages : 24 No. of Claims : 32

(12) PATENT APPLICATION PUBLICATION
(19) INDIA
(22) Date of filing of Application :19/11/2012
(21) Application No.10002/DELNP/2012 A
(43) Publication Date : 07/11/2014

(54) Title of the invention : METHODS FOR INCREASING THE PRODUCTION OR ACTIVITY OF CATALASE

(51) International classification :A01N45/00
(31) Priority Document No :61/396,372
(32) Priority Date :26/05/2010
(33) Name of priority country :U.S.A.
(86) International Application No :PCT/US2011/000891
Filing Date :18/05/2011
(87) International Publication No :WO 2011/149513
(61) Patent of Addition to Application Number :NA
Filing Date :NA
(62) Divisional to Application Number :NA
Filing Date :NA

(71)**Name of Applicant :**
1)NESTEC S.A.
Address of Applicant :Avenue Nestle 55 CH 1800 Vevey Switzerland
(72)**Name of Inventor :**
1)MIDDLETON Rondo Paul
2)IMPANBUTR Nongnuch

(57) Abstract :
Methods and compositions for increasing the production or activity of catalase in an animal are disclosed. The methods comprise administering vitamin D to the animal in an amount effective to increase catalase production or activity. Methods for treating catalase deficiency extending the prime years of an animal s life promoting health and wellness of an animal and improving the quality of life for an animal through the vitamin D mediated increase in catalase production or activity are also disclosed. Methods of screening for vitamin D mimetics based on their ability to increase the production or activity of catalase in cells in a manner similar to vitamin D are also disclosed.

No. of Pages : 29 No. of Claims : 54

(12) PATENT APPLICATION PUBLICATION
(19) INDIA
(22) Date of filing of Application :19/11/2012
(21) Application No.10003/DELNP/2012 A
(43) Publication Date : 07/11/2014

(54) Title of the invention : ERGONOMIC DISPENSER INTERFACE

(51) International classification :A47J31/44,H01H25/06
(31) Priority Document No :10163635.5
(32) Priority Date :21/05/2010
(33) Name of priority country :EPO
(86) International Application No :PCT/EP2011/058223
Filing Date :20/05/2011
(87) International Publication No :WO 2011/144720
(61) Patent of Addition to Application Number :NA
Filing Date :NA
(62) Divisional to Application Number :NA
Filing Date :NA

(71)**Name of Applicant :**
1)NESTEC S.A.
Address of Applicant :Av. Nestl 55 CH 1800 Vevey Switzerland
(72)**Name of Inventor :**
1)CAHEN Antoine
2)TURCHI Daniel

(57) Abstract :
A machine (1) for preparing a beverage has: a beverage preparation module for processing one or more beverage ingredients and for dispensing a beverage resulting therefrom; a unit for controlling such processing in accordance with a parameter set to a value stored in the unit; and a user interface (20) connected to the control unit for acquiring the value from a user and storing the value in the control unit. The user interface has a first user selector (21) associated with a first value for the parameter and a second user selector (22) associated with a second value for the parameter. The first and second user selectors (21 22) each comprises a user actuation adjustment direction (211 221) for shifting on user actuation in the adjustment direction the value associated with the user selector to a user selected adjusted value selected from a range of values associated with the user selector. Furthermore each of the user selectors comprises a user actuation initiation direction (212 222) for initiating on user actuation in the initiation direction: the control unit to store the user selected adjusted value as the stored value; and/or the processing in accordance with the parameter set to the user selected adjusted value as said stored value.

No. of Pages : 25 No. of Claims : 15

(12) PATENT APPLICATION PUBLICATION
(19) INDIA
(22) Date of filing of Application :19/11/2012
(21) Application No.10005/DELNP/2012 A
(43) Publication Date : 07/11/2014

(54) Title of the invention : ANTENNA INTERFACE FOR A RADIO RECEIVER

(51) International classification :H01R13/24
(31) Priority Document No :1002131
(32) Priority Date :20/05/2010
(33) Name of priority country :France
(86) International Application No :PCT/FR2011/051154
Filing Date :20/05/2011
(87) International Publication No :WO 2011/144881
(61) Patent of Addition to Application Number :NA
Filing Date :NA
(62) Divisional to Application Number :NA
Filing Date :NA

(71)**Name of Applicant :**
1)THALES
Address of Applicant :45 rue de Villiers F 92200 Neuilly Sur Seine France
(72)**Name of Inventor :**
1)LE TORTOREC Christian
2)RETAILLEAU Xavier
3)DEFFOIS Mathieu
4)BARBET Anne
5)GRAMSAMER Josef

(57) Abstract :
The invention relates to an interface (8) which comprises a socket (10) and a plug (12). The socket (10) comprises a body (11) and two coaxial cables (22), each comprising a core (22A) , a braid (22C) coaxial to the core (22A), and an electric insulator (22B) between the core (22A) and the braid (22C). Each coaxial cable (22) extends between a first end connected to a printed circuit board of the receiver and a second end at which the braid (22C) is electrically connected to the body (11), and at which the core (22A) can be accessed through an opening (21 B) made in the body. The plug (12) comprises a body (27) and at least two contactors (36) such that, when the plug (12) and the socket (10) are connected, each contactor (36) is arranged opposite an opening (21 B) such that the core (22A) of a respective cable (22) is electrically connected to said contactor (36), and the braid (22C) of each cable (22) is electrically connected to the body (27) of the plug via the body (11).

No. of Pages : 18 No. of Claims : 9

(12) PATENT APPLICATION PUBLICATION
(19) INDIA
(22) Date of filing of Application :19/11/2012

(21) Application No.10011/DELNP/2012 A
(43) Publication Date : 07/11/2014

(54) Title of the invention : TREATMENT OF VASCULAR COMPLICATIONS OF DIABETES

(51) International classification :A61K38/19,C07K7/64,C07K14/525
(31) Priority Document No :10166637.8
(32) Priority Date :21/06/2010
(33) Name of priority country :EPO
(86) International Application No :PCT/EP2010/006408
Filing Date :20/10/2010
(87) International Publication No :WO 2011/160664
(61) Patent of Addition to Application Number :NA
Filing Date :NA
(62) Divisional to Application Number :NA
Filing Date :NA

(71)**Name of Applicant :**
1)APEPTICO FORSCHUNG UND ENTWICKLUNG GMBH
Address of Applicant :Mariahilferstrasse 136 A 1150 Wien Austria
(72)**Name of Inventor :**
1)FISCHER Bernhard
2)LUCAS Rudolf

(57) Abstract :
A peptide consisting of 7 17 amino acids and including the adjacent hexamer TXEXXE where X X and X can be any natural or non natural amino acid wherein the peptide does not exhibit TNF receptor binding activity and is cyclic for the treatment or prevention of vascular complications in diabetes patients.

No. of Pages : 22 No. of Claims : 7

(12) PATENT APPLICATION PUBLICATION
(19) INDIA
(22) Date of filing of Application :19/11/2012
(21) Application No.10012/DELNP/2012 A
(43) Publication Date : 07/11/2014

(54) Title of the invention : ANTENNA ARRANGEMENT

(51) International classification :H01Q9/04
(31) Priority Document No :PCT/EP2010/059392
(32) Priority Date :01/07/2010
(33) Name of priority country :EPO
(86) International Application No :PCT/EP2010/066362
Filing Date :28/10/2010
(87) International Publication No :WO 2012/000569
(61) Patent of Addition to Application Number :NA
Filing Date :NA
(62) Divisional to Application Number :NA
Filing Date :NA

(71)**Name of Applicant :**
1)NOKIA SIEMENS NETWORKS OY
Address of Applicant :Karaportti 3 FIN 02610 Espoo Finland
(72)**Name of Inventor :**
1)ERMUTLU Murat Emre
2)MARTIKKALA Risto Tapani

(57) Abstract :
An antenna arrangement is provided which includes first and second antenna elements. A feeder line connects the first and second antenna elements for feeding a signal to and from the first and second antenna elements and the signal is inductively coupled between the feeder line and a calibration line so it can be fed to measurement equipment.

No. of Pages : 27 No. of Claims : 18

(12) PATENT APPLICATION PUBLICATION
(19) INDIA
(22) Date of filing of Application :19/11/2012
(21) Application No.10013/DELNP/2012 A
(43) Publication Date : 07/11/2014

(54) Title of the invention : ASSEMBLY OF POLYMERIC PARTS

(51) International classification :B29C45/16,F21V7/22,F21V19/00
(31) Priority Document No :10167362.2
(32) Priority Date :25/06/2010
(33) Name of priority country :EPO
(86) International Application No :PCT/EP2011/060624
Filing Date :24/06/2011
(87) International Publication No :WO 2011/161241
(61) Patent of Addition to Application Number :NA
Filing Date :NA
(62) Divisional to Application Number :NA
Filing Date :NA

(71)**Name of Applicant :**
1)DSM IP ASSETS B.V.
Address of Applicant :Het Overloon 1 NL 6411 TE Heerlen Netherlands
(72)**Name of Inventor :**
1)DIJK VAN Hans Klaas
2)KERSEMAKERS Joseph Johannes Franciscus Marie
3)DORMANS Paulus Hubertus Helena

(57) Abstract :
The invention relates to an assembly of parts comprising a first part containing a first polymer composition and a second part containing a second polymer composition both compositions comprising a semi crystalline polymer and optionally one or more other components the first part and the second part being fastened to each other through an interface between the first polymer composition and the second polymer composition wherein the interface is free from mechanically interlocking elements and the thermal conductivity of the second polymer composition (TC2) is higher than the thermal conductivity of the first polymer composition (TC1) with a factor TC2/TC1 of at least 1.5. The invention further relates to a process for manufacturing such an assembly and to various uses of said assembly.

No. of Pages : 22 No. of Claims : 15

(12) PATENT APPLICATION PUBLICATION
(19) INDIA
(22) Date of filing of Application :19/11/2012
(21) Application No.10014/DELNP/2012 A
(43) Publication Date : 07/11/2014

(54) Title of the invention : CUP TAPPET AND METHOD FOR PRODUCING SAME

(51) International classification :F01L1/14
(31) Priority Document No :10 2010 032 254.7
(32) Priority Date :26/07/2010
(33) Name of priority country :Germany
(86) International Application No :PCT/EP2011/057855
Filing Date :16/05/2011
(87) International Publication No :WO 2012/013376
(61) Patent of Addition to Application Number :NA
Filing Date :NA
(62) Divisional to Application Number :NA
Filing Date :NA

(71)**Name of Applicant :**
1)SCHAEFFLER TECHNOLOGIES AG & CO. KG
Address of Applicant :Industriestrae 1 3 91074 Herzogenaurach Germany
(72)**Name of Inventor :**
1)EISENHARDT G¼nter

(57) Abstract :
The invention relates to a cup tappet (1,) for an internal combustion engine and to a method for producing same. The cup tappet has a tappet housing (2, 2) having a hollow cylindrical cup skirt (3, 3) and a cup base (4, 4;) which closes the tappet skirt on one side and on which the tappet skirt is formed by means of cold forming a steel blank without cutting. The outer face of the cup base serves as a contact surface (5, 5) for a cam (6) of the internal combustion engine, wherein said cam acts on the cup tappet to impart travel, and the outer face of the cup skirt serves as a contact surface (8, 8) for a guide bore (9) of the internal combustion engi ne accommodating the cup tappet in the direction of travel. To this end the outer face of the tappet housing should only be machined by cutting on the outer face of the cup skirt.

No. of Pages : 11 No. of Claims : 4

(12) PATENT APPLICATION PUBLICATION
(19) INDIA
(22) Date of filing of Application :19/11/2012
(21) Application No.10015/DELNP/2012 A
(43) Publication Date : 07/11/2014

(54) Title of the invention : TOOL FOR COLLECTING A SAMPLE OF ANIMAL TISSUE

(51) International classification :B27B
(31) Priority Document No :1054563
(32) Priority Date :09/06/2010
(33) Name of priority country :France
(86) International Application No :PCT/EP2011/059636
Filing Date :09/06/2011
(87) International Publication No : NA
(61) Patent of Addition to Application Number :NA
Filing Date :NA
(62) Divisional to Application Number :NA
Filing Date :NA

(71)**Name of Applicant :**
1)ALLFLEX EUROPE
Address of Applicant :Route des Eaux ZI de Plague 35500 Vitr France
(72)**Name of Inventor :**
1)DESTOUMIEUX Jean-Jacques
2)TEYCHENE Bruno

(57) Abstract :
The invention relates to a tool for collecting a sample of animal tissue for interacting with collection means including at least one cutting element capable of cutting out said sample and a pushing element movable with respect to said cutting element and capable of pushing said sample into post-cutting storage means. According to the invention such a tool includes: a means for driving said cutting element (21) a means for driving said pushing element (23) and a means for reversibly coupling said drive means of the cutting element with said drive means of the pushing element.

No. of Pages : 37 No. of Claims : 16

(12) PATENT APPLICATION PUBLICATION
(19) INDIA
(22) Date of filing of Application :19/11/2012
(21) Application No.10017/DELNP/2012 A
(43) Publication Date : 07/11/2014

(54) Title of the invention : ENTERIC TABLET

(51) International classification :A61K
(31) Priority Document No :2010-105666
(32) Priority Date :30/04/2010
(33) Name of priority country :Japan
(86) International Application No :PCT/JP2011/060483
Filing Date :28/04/2011
(87) International Publication No : NA
(61) Patent of Addition to Application Number :NA
Filing Date :NA
(62) Divisional to Application Number :NA
Filing Date :NA

(71)**Name of Applicant :**
1)TAKEDA PHARMACEUTICAL COMPANY LIMITED
Address of Applicant :1-1 Doshomachi 4-chome Chuo-ku Osaka-shi Osaka 541-0045 Japan
(72)**Name of Inventor :**
1)MISAKI Masafumi
2)TSUSHIMA Yuki
3)NIWA Masahiro

(57) Abstract :
The present invention relates to an enteric tablet with improved bioavailability which is rapidly disintegrated after reaching the intestine to allow dissolution of the active ingredient and which characteristically reduces the amount of talc to be used and is free of an alkali component.

No. of Pages : 32 No. of Claims : 6

(12) PATENT APPLICATION PUBLICATION
(19) INDIA
(22) Date of filing of Application :19/11/2012
(21) Application No.10018/DELNP/2012 A
(43) Publication Date : 07/11/2014

(54) Title of the invention : THERMOSYPHON COOLERS FOR COOLING SYSTEMS WITH COOLING TOWERS

(51) International classification :B27B
(31) Priority Document No :61/349,080
(32) Priority Date :27/05/2010
(33) Name of priority country :U.S.A.
(86) International Application No :PCT/US2010/042737
Filing Date :21/07/2010
(87) International Publication No : NA
(61) Patent of Addition to Application Number :NA
Filing Date :NA
(62) Divisional to Application Number :NA
Filing Date :NA

(71)**Name of Applicant :**
1)JOHNSON CONTROLS TECHNOLOGY COMPANY
Address of Applicant :915 East 32nd Street Holland Michigan 49423 U.S.A.
(72)**Name of Inventor :**
1)FURLONG James W.
2)PILLIS Joseph W.
3)LEHMAN Delmar E.

(57) Abstract :
In one embodiment a cooling system may include a thermosyphon cooler that cools a cooling fluid through dry cooling and a cooling tower that cools a cooling fluid through evaporative cooling. The thermosyphon cooler may use natural convection to circulate a refrigerant between a shell and tube evaporator and an air cooled condenser. The thermosyphon cooler may be located in the cooling system upstream of and in series with the cooling tower and may be operated when the thermosyphon cooler is more economically and/or resource efficient to operate than the cooling tower. According to certain embodiments factors such as the ambient temperature the cost of electricity and the cost of water among others may be used to determine whether to operate the thermosyphon cooler the cooling tower or both.

No. of Pages : 42 No. of Claims : 25

(12) PATENT APPLICATION PUBLICATION
(19) INDIA
(22) Date of filing of Application :19/11/2012
(21) Application No.10019/DELNP/2012 A
(43) Publication Date : 07/11/2014

(54) Title of the invention : WATER TREATMENT APPARATUS AND STERILIZING AND CLEANSING METHOD THEREOF

(51) International classification :B01D35/04,C02F1/44,C02F1/467
(31) Priority Document No :10-2010-0046806
(32) Priority Date :19/05/2010
(33) Name of priority country :Republic of Korea
(86) International Application No :PCT/KR2011/003722
Filing Date :19/05/2011
(87) International Publication No :WO 2011/145902
(61) Patent of Addition to Application Number :NA
Filing Date :NA
(62) Divisional to Application Number :NA
Filing Date :NA

(71)**Name of Applicant :**
1)WOONGJIN COWAY CO. LTD
Address of Applicant :658 Yougu ri Yougu eup Gongjoo Choongcheongnam do 314 895 Republic of Korea
(72)**Name of Inventor :**
1)LEE Soo Young
2)JANG Jung Gyu
3)HWANG Ui Son
4)KWON Claude
5)LEE Jung Hwan
6)KIM Chul Ho
7)CHANG Min Suk
8)CHOI In Gyue

(57) Abstract :
A water treatment apparatus capable of sterilizing a storage tank and a sterilizing and cleansing method thereof are disclosed. The water treatment apparatus includes: a filter unit purifying raw water; a storage tank connected to the filter unit and storing purified water which has been filtered through the filter unit; an electrolytic sterilizer installed between the filter unit and the storage tank electrolyzing only purified water which has been filtered through at least a portion of the filter unit to generate sterilization water and supplying the sterilization water to the storage tank; a drain unit connected to the storage tank and discharging water accommodated in the storage tank; and a control unit controlling a water purification mode of the filter unit and a sterilization mode through the electrolytic sterilizer and the drain unit.

No. of Pages : 77 No. of Claims : 70

(12) PATENT APPLICATION PUBLICATION
(19) INDIA
(22) Date of filing of Application :19/11/2012
(21) Application No.10020/DELNP/2012 A
(43) Publication Date : 07/11/2014

(54) Title of the invention : OPENING/CLOSING DEVICE

(51) International classification :H04M1/02
(31) Priority Document No :2010-113010
(32) Priority Date :17/05/2010
(33) Name of priority country :Japan
(86) International Application No :PCT/JP2011/060528
Filing Date :02/05/2011
(87) International Publication No :WO 2011/145458
(61) Patent of Addition to Application Number :NA
Filing Date :NA
(62) Divisional to Application Number :NA
Filing Date :NA

(71)**Name of Applicant :**
1)MITSUBISHI STEEL MFG. CO.LTD.
Address of Applicant :2 22 Harumi 3 chome Chuo ku Tokyo 1048550 Japan
(72)**Name of Inventor :**
1)MITSUI Yasuhiro
2)SAYAMA Hironobu

(57) Abstract :
An opening/closing device includes a fixed plate, a moving plate movable relative to the fixed plate, a slide plate formed having a groove, a hinge including a first shaft connected to the fixed plate, 10 a third shaft connected to the moving plate, and a second shaft between the first and third shafts, and moves the moving plate between closed and open positions relative to the fixed plate,a slide arm including a fourth shaft connected to the moving 15 plate and a fifth shaft connected slidably along the groove, and moves the moving plate between the closed and open positions, a link arm having one end connected to the second shaft and the other to the fifth shaft. The fifth shaft slides inside the 20 groove as the link arm moves along with the moving of the hinge arm when the moving plate is moved between the closed and open positions.

No. of Pages : 54 No. of Claims : 5

(12) PATENT APPLICATION PUBLICATION
(19) INDIA
(22) Date of filing of Application :19/11/2012
(21) Application No.10021/DELNP/2012 A
(43) Publication Date : 07/11/2014

(54) Title of the invention : HYPERPROLIFERATIVE RECOMBINANT CELL

(51) International classification :C12N1/36,C12P1/04
(31) Priority Document No :10163490.5
(32) Priority Date :20/05/2010
(33) Name of priority country :EPO
(86) International Application No :PCT/EP2011/058260
Filing Date :20/05/2011
(87) International Publication No :WO 2011/144739
(61) Patent of Addition to Application Number :NA
Filing Date :NA
(62) Divisional to Application Number :NA
Filing Date :NA

(71)**Name of Applicant :**
1)UNIVERSITE LIBRE DE BRUXELLES
Address of Applicant :Avenue F.D. Roosevelt 50 CP 161 B 1050 Bruxelles Belgium
(72)**Name of Inventor :**
1)VAN MELDEREN Laurence
2)TIMMERMANS Johan

(57) Abstract :
The present invention is related to a method to increase the growth of a cell characterized by a deletion or one or more mutation (s) in the tldD and/or tldE genes coupled with one or more mutation (s) in dam or a partial deletion or deletion of the dam gene to the obtained cell and to its use.

No. of Pages : 40 No. of Claims : 28

(12) PATENT APPLICATION PUBLICATION
(19) INDIA
(22) Date of filing of Application :20/11/2012
(21) Application No.10033/DELNP/2012 A
(43) Publication Date : 07/11/2014

(54) Title of the invention : CENTRAL CONTROL DEVICE AND CENTRALIZED CONTROL METHOD

(51) International classification :A47J
(31) Priority Document No :2010-104661
(32) Priority Date :29/04/2010
(33) Name of priority country :Japan
(86) International Application No :PCT/JP2011/057815
Filing Date :29/03/2011
(87) International Publication No : NA
(61) Patent of Addition to Application Number :NA
Filing Date :NA
(62) Divisional to Application Number :NA
Filing Date :NA

(71)**Name of Applicant :**
1)FUJI MACHINE MFG. CO. LTD.
Address of Applicant :19 Chausuyama Yama-machi Chiryu-shi Aichi 4728686 Japan
(72)**Name of Inventor :**
1)KODAMA Seigo
2)IWAKI Noriaki
3)FURUKAWA Kazuya
4)TAKAHAMA Toru

(57) Abstract :
It is an object to enhance practical utility of a central control device configured to control in a centralized manner a plurality of work-element performing apparatuses in a manufacture work machine which is configured to perform a manufacture work by the plurality of work-element performing apparatuses. In a central control device 130 136 including: a source-data storage section 184 configured to store source data in which is encoded a matter of each of a plurality of work elements to be performed by each of the plurality of work-element performing apparatuses to perform the manufacture work; and a motion-command generating section 188 configured to generate a plurality of motion commands on the basis of the source data the plurality of motion commands generated by the motion-command generating section are ....

No. of Pages : 90 No. of Claims : 17

(12) PATENT APPLICATION PUBLICATION
(19) INDIA
(22) Date of filing of Application :20/11/2012
(21) Application No.10034/DELNP/2012 A
(43) Publication Date : 07/11/2014

(54) Title of the invention : MANUFACTURE WORK MACHINE

(51) International classification :B23B
(31) Priority Document No :2010-104661
(32) Priority Date :29/04/2010
(33) Name of priority country :Japan
(86) International Application No :PCT/JP2011/057816
Filing Date :29/03/2011
(87) International Publication No : NA
(61) Patent of Addition to Application Number :NA
Filing Date :NA
(62) Divisional to Application Number :NA
Filing Date :NA

(71)**Name of Applicant :**
1)FUJI MACHINE MFG. CO. LTD.
Address of Applicant :19 Chausuyama Yama-machi Chiryu-shi Aichi 4728686 Japan
(72)**Name of Inventor :**
1)IWAKI Noriaki
2)NAGATO Kazuyoshi
3)KATO Masaki
4)NOMURA Hideaki
5)ICHINO Shinji

(57) Abstract :
It is an object to provide a manufacture work machine with enhanced versatility. The manufacture work machine includes each as a work-element performing apparatus configured to perform one of a plurality of work elements that constitute a manufacture work a plurality of work head devices 26 28 which are mutually different in kind of a work to be performed. More specifically one 26 of the plurality of work head devices functions as a main head device configured to perform a main work in the manufacture work e.g. to perform holding of a component supplied by a component supplier 24 for mounting the component onto a base member conveyed by a conveyor 22 while another one 28 of the plurality of work head devices functions as an ....

No. of Pages : 87 No. of Claims : 10

(12) PATENT APPLICATION PUBLICATION
(19) INDIA
(22) Date of filing of Application :20/11/2012
(21) Application No.10036/DELNP/2012 A
(43) Publication Date : 07/11/2014

(54) Title of the invention : POSOLOGY AND ADMINISTRATION OF GLUCOCORTICOID BASED COMPOSITIONS

(51) International classification :C12P
(31) Priority Document No :PA 2010 00442
(32) Priority Date :20/05/2010
(33) Name of priority country :Denmark
(86) International Application No :PCT/EP2011/002466
Filing Date :18/05/2011
(87) International Publication No : NA
(61) Patent of Addition to Application Number :NA
Filing Date :NA
(62) Divisional to Application Number :NA
Filing Date :NA

(71)**Name of Applicant :**
1)DUOCORT PHARMA AB
Address of Applicant :Kullagatan 8-10 S-252 20 Helsingborg Sweden
(72)**Name of Inventor :**
1)THOMAS HEDNER
2)ULRIKA SIGRIDA HELENA SIMONSSON
3)GUDMUNDUR JOHANNSSON
4)HANS LENNERN„S
5)STANKO SKRTIC

(57) Abstract :
The present invention relates to an improved method of administration of glucocorticoid based compositions in glucocorticoid replacement therapies enabling an objectively based regimen for administration enabling correct individual dosing of glucocorticoids resulting in an optimised individual replacement therapy and thus an improved long-term outcome for patients with temporary or chronic adrenal insufficiency.

No. of Pages : 69 No. of Claims : 15

(12) PATENT APPLICATION PUBLICATION
(19) INDIA
(22) Date of filing of Application :20/11/2012

(21) Application No.10037/DELNP/2012 A
(43) Publication Date : 07/11/2014

(54) Title of the invention : TREAD FOR A TIRE FOR A TRAILER-TYPE HEAVY VEHICLE

(51) International classification :C13C
(31) Priority Document No :1053376
(32) Priority Date :30/04/2010
(33) Name of priority country :France
(86) International Application No :PCT/EP2011/056663
Filing Date :27/04/2011
(87) International Publication No : NA
(61) Patent of Addition to Application Number :NA
Filing Date :NA
(62) Divisional to Application Number :NA
Filing Date :NA

(71)**Name of Applicant :**
1)COMPAGNIE GENERALE DES ETABLISSEMENTS MICHELIN
Address of Applicant :12 cours Sablon 63000 CLERMONT-FERRAND France
2)MICHELIN RECHERCHE ET TECHNIQUE S.A.
(72)**Name of Inventor :**
1)BENOIT FOUCHER
2)HERVE BECHON
3)PHILIPPE MANSUY

(57) Abstract :
A tyre for heavy goods vehicle of the trailer type comprising a tread (10) with a thickness E having a tread surface (100), this tread (10) being provided with an asymmetrical sculpture design over at least one 15 thickness equal to 30% of the thickness of the tread, so as to form an outer portion (1) of axial width LE designed to be positioned axially towards the outside of a vehicle when the tyre is fitted on this vehicle and an inner portion (2) of axial width LI situated in 20 the axial extension of the outer portion (1), the inner portion (2) and the outer portion (1) being separated by a groove (5) of generally circumferential orientation, this tread (10) being characterized in that the the outer portion (1) of the tread comprises, 25 in the circumferential direction, a succession o_ rigid strips (11) of circumferential width D11 and of axial width LE having no groove or cavity opening onto the tread surface in the new state and of flexible strips (12) of circumferential width D12 and of axial width LE 30 provided with grooves (121) extending over the whole circumferential width D12 of these flexible strips, the rigid strips (11) having a circumferential width D11 at least equal to 7% of the axial width LE of the outer portion (1).

No. of Pages : 28 No. of Claims : 13

(12) PATENT APPLICATION PUBLICATION
(19) INDIA
(22) Date of filing of Application :20/11/2012
(21) Application No.10050/DELNP/2012 A
(43) Publication Date : 07/11/2014

(54) Title of the invention : PROCESS TO PRODUCE PROCESS OIL WITH LOW POLYAROMATIC HYDROCARBON CONTENT

(51) International classification :C07C
(31) Priority Document No :P00201000338
(32) Priority Date :17/05/2010
(33) Name of priority country :Indonesia
(86) International Application No :PCT/ID2011/000001
Filing Date :25/04/2011
(87) International Publication No : NA
(61) Patent of Addition to Application Number :NA
Filing Date :NA
(62) Divisional to Application Number :NA
Filing Date :NA

(71)**Name of Applicant :**
1)PT PERTAMINA (PERSERO)
Address of Applicant :Jl Medan Merdeka Timur No. 1A Jakarta 10110 INDONESIA
2)PT PURA BARUTAMA
(72)**Name of Inventor :**
1)YANA Meliana
2)NUNIK Supriyantini
3)JOSEPH Tundang
4)BAMBANG Sudiyatmoko

(57) Abstract :
Process for TDAE-1 and TDAE-2 production is initiated with production of DAE Feeds which have kinematic viscosity at 100°C ranges 24-67 cSt followed by mixing them with solvent to yield Mixture of DAE Feed with density ranges 0.75-0.85 kg/liter and further contacting the Mixture of DAE Feed with solvent like furfural NMP and DMSO to facilitate a counter current liquid-liquid extraction wherein the TDAE-1 and TDAE-2 are produced at ratio of polar solvent to Mixture of DAE Feed ranges 1.7-2.0 and 0.5-1.7 respectively. The PCA content of TDAE-1 and TDAE-2 are less than 3% weight and 3-20% weight. The amount of 8 Grimmer polyaromatics hydrocarbon content in the TDAE-1 and TDAE-2 are the same that is less than 10 mg/kg including Benzo (a) pyrene substance as much as less than 1 mg/kg.

No. of Pages : 28 No. of Claims : 14

(12) PATENT APPLICATION PUBLICATION
(19) INDIA
(22) Date of filing of Application :20/11/2012
(21) Application No.10051/DELNP/2012 A
(43) Publication Date : 07/11/2014

(54) Title of the invention : METHOD AND INSTALLATION FOR LIQUEFYING FLUE GAS FROM COMBUSTION INSTALLATIONS

(51) International classification :F25J3/06,F25J3/02,B01D53/00
(31) Priority Document No :10004249.8
(32) Priority Date :21/04/2010
(33) Name of priority country :EPO
(86) International Application No :PCT/IB2011/000853
Filing Date :19/04/2011
(87) International Publication No :WO 2011/132055
(61) Patent of Addition to Application Number :NA
Filing Date :NA
(62) Divisional to Application Number :NA
Filing Date :NA

(71)**Name of Applicant :**
1)ALSTOM TECHNOLOGY LTD
Address of Applicant :Brown Boveri Strasse 7 CH 5400 Baden Switzerland
(72)**Name of Inventor :**
1)STALLMANN Olaf

(57) Abstract :
A plant for CO2 separation is described that has a high security level, minimized energy consumption and can de liver liquid CO2 from the flue gas of a fossil fired power plant at different purity levels.

No. of Pages : 25 No. of Claims : 15

(12) PATENT APPLICATION PUBLICATION
(19) INDIA
(22) Date of filing of Application :20/11/2012
(21) Application No.10054/DELNP/2012 A
(43) Publication Date : 07/11/2014

(54) Title of the invention : COVERING FOR A MEDICAL SCOPING DEVICE

(51) International classification :A61B1/00,A61B1/32,A61M29/00
(31) Priority Document No :1008637.9
(32) Priority Date :25/05/2010
(33) Name of priority country :U.K.
(86) International Application No :PCT/GB2011/050981
Filing Date :24/05/2011
(87) International Publication No :WO 2011/148172
(61) Patent of Addition to Application Number :NA
Filing Date :NA
(62) Divisional to Application Number :NA
Filing Date :NA

(71)**Name of Applicant :**
1)ARC MEDICAL DESIGN LIMITED
Address of Applicant :First Floor 43 Park Place Leeds Yorkshire LS1 2RY U.K.
(72)**Name of Inventor :**
1)AXON Anthony

(57) Abstract :
The present invention relates to a cover having a plurality of moveable external angled projecting elements for use with flexible medical scoping devices such as endoscopesor enteroscopes. The invention includes the cover with an over cuff and use of the disposable removable covering in methods of medical scoping procedures or examinations. The invention also includes an applicator for assisting in placing the covering about or over a medical device and a kit of parts.

No. of Pages : 38 No. of Claims : 38

(12) PATENT APPLICATION PUBLICATION
(19) INDIA
(22) Date of filing of Application :20/11/2012
(21) Application No.10055/DELNP/2012 A
(43) Publication Date : 07/11/2014

(54) Title of the invention : TEAR LIPOCALIN MUTEINS BINDING IL 4 R ALPHA

(51) International classification :C07K14/435,C07K14/47,C12N15/10
(31) Priority Document No :61/352461
(32) Priority Date :08/06/2010
(33) Name of priority country :U.S.A.
(86) International Application No :PCT/EP2011/059420
Filing Date :08/06/2011
(87) International Publication No :WO 2011/154420
(61) Patent of Addition to Application Number :NA
Filing Date :NA
(62) Divisional to Application Number :NA
Filing Date :NA

(71)**Name of Applicant :**
1)PIERIS AG
Address of Applicant :Lise Meitner Str. 30 85354 Freising Germany
(72)**Name of Inventor :**
1)HOHLBAUM Andreas
2)BAEHRE Alexandra
3)MATSCHINER Gabriele

(57) Abstract :
The present invention relates to novel muteins derived from human tear lipocalin which bind to IL 4 receptor alpha. The sequences of the muteins comprise particular combinations of amino acids. In particular a mutated amino acid residue is present at any one or more of the sequence positions 27 28 30 31 33 53 57 61 64 66 80 83 104 106 and 108 of the linear polypeptide sequence of the mature human tear lipocalin. A mutated amino acid residue is also present at any 2 or more of the sequence positions 26 32 34 55 56 58 and 63 of the linear polypeptide sequence of the mature human tear lipocalin. The invention also provides a corresponding nucleic acid molecule encoding such a mutein and a method for producing such a mutein and its encoding nucleic acid molecule.

No. of Pages : 82 No. of Claims : 19

(12) PATENT APPLICATION PUBLICATION
(19) INDIA
(22) Date of filing of Application :20/11/2012

(21) Application No.10056/DELNP/2012 A
(43) Publication Date : 07/11/2014

(54) Title of the invention : ANTI VIRAL COMPOUNDS

(51) International classification	:A61K31/4725,A61K31/47,A61K31/37
(31) Priority Document No	:61/327579
(32) Priority Date	:23/04/2010
(33) Name of priority country	:U.S.A.
(86) International Application No Filing Date	:PCT/US2011/033336 :20/04/2011
(87) International Publication No	:WO 2011/133728
(61) Patent of Addition to Application Number Filing Date	:NA :NA
(62) Divisional to Application Number Filing Date	:NA :NA

(71)**Name of Applicant :**
1)KINETA INC.
Address of Applicant :219 Terry Avenue North Suite 300 Seattle WA 98109 5208 U.S.A.
(72)**Name of Inventor :**
1)IADONATO Shawn P.
2)BEDARD Kristin

(57) Abstract :
Disclosed herein are compounds and related compositions for the treatment of viral infection including RNA viral infection and compounds that can modulate the RIG I pathway in vertebrate cells including compounds that can activate the RIG I pathway.

No. of Pages : 64 No. of Claims : 19

(12) PATENT APPLICATION PUBLICATION
(19) INDIA
(22) Date of filing of Application :20/11/2012
(21) Application No.10057/DELNP/2012 A
(43) Publication Date : 07/11/2014

(54) Title of the invention : ANTI VIRAL COMPOUNDS

(51) International classification :A61K31/519,A61K31/495,C07D487/04
(31) Priority Document No :61/327566
(32) Priority Date :23/04/2010
(33) Name of priority country :U.S.A.
(86) International Application No :PCT/US2011/033326
Filing Date :20/04/2011
(87) International Publication No :WO 2011/133722
(61) Patent of Addition to Application Number :NA
Filing Date :NA
(62) Divisional to Application Number :NA
Filing Date :NA

(71)**Name of Applicant :**
1)KINETA INC.
Address of Applicant :219 Terry Avenue North Suite 300 Seattle WA 98109 5208 U.S.A.
(72)**Name of Inventor :**
1)IADONATO Shawn P.
2)BEDARD Kristin

(57) Abstract :
Disclosed herein are compounds and related compositions for the treatment of viral infection including RNA viral infection and compounds that can modulate the RIG- I pathway in vertebrate cells including compounds that can activate the RIG I pathway.

No. of Pages : 71 No. of Claims : 20

(12) PATENT APPLICATION PUBLICATION
(19) INDIA
(22) Date of filing of Application :20/11/2012
(21) Application No.10061/DELNP/2012 A
(43) Publication Date : 07/11/2014

(54) Title of the invention : PEGYLATED C PEPTIDE

(51) International classification :C07K14/575,C07K17/08,A61K38/22
(31) Priority Document No :61/345293
(32) Priority Date :17/05/2010
(33) Name of priority country :U.S.A.
(86) International Application No :PCT/US2011/036858
Filing Date :17/05/2011
(87) International Publication No :WO 2011/146518
(61) Patent of Addition to Application Number :NA
Filing Date :NA
(62) Divisional to Application Number :NA
Filing Date :NA

(71)**Name of Applicant :**
1)CEBIX INC.
Address of Applicant :1298 Prospect Street Suite 2A LaJolla CA 92037 U.S.A.
(72)**Name of Inventor :**
1)BARRACK Sheri
2)CALLAWAY James
3)MAZZONI Michelle

(57) Abstract :
The present invention relates to modified forms of C peptide and methods for their use. In one aspect the modified forms of C peptide comprise PEGylated C peptide derivatives comprising at least one PEG group attached to the N terminus which exhibit superior pharmacokinetic and biological activity in vivo.

No. of Pages : 205 No. of Claims : 68

(12) PATENT APPLICATION PUBLICATION
(19) INDIA
(22) Date of filing of Application :20/11/2012
(21) Application No.10062/DELNP/2012 A
(43) Publication Date : 07/11/2014

(54) Title of the invention : YEAST PRODUCTION CULTURE FOR THE PRODUCTION OF BUTANOL

(51) International classification :C12N1/16,C12R1/865,C12P7/16
(31) Priority Document No :61/355733
(32) Priority Date :17/06/2010
(33) Name of priority country :U.S.A.
(86) International Application No :PCT/US2011/040697
Filing Date :16/06/2011
(87) International Publication No :WO 2011/159894
(61) Patent of Addition to Application Number :NA
Filing Date :NA
(62) Divisional to Application Number :NA
Filing Date :NA

(71)**Name of Applicant :**
1)BUTAMAX(TM) ADVANCED BIOFUELS LLC
Address of Applicant :Experimental Station Building 268 200 Powder Mill Road Wilmington Delaware 19880 0268 U.S.A.
(72)**Name of Inventor :**
1)NAGARAJAN Vasantha
2)BRAMUCCI Michael G.

(57) Abstract :
High cell density cultures of yeast were found to have higher tolerance for butanol in the medium. The high cell density yeast cultures had greater survival and higher glucose utilization than cultures with low cell densities. Production of butanol using yeast in high cell density cultures is thus beneficial for improving butanol production.

No. of Pages : 146 No. of Claims : 22

(12) PATENT APPLICATION PUBLICATION
(19) INDIA
(22) Date of filing of Application :20/11/2012
(21) Application No.10063/DELNP/2012 A
(43) Publication Date : 07/11/2014

(54) Title of the invention : PROCESS AND APPARATUS FOR PRODUCING A MEMBRANE MODULE

(51) International classification :D06N1/00
(31) Priority Document No :10 2010 027 973.0
(32) Priority Date :20/04/2010
(33) Name of priority country :Germany
(86) International Application No :PCT/EP2011/056350
Filing Date :20/04/2011
(87) International Publication No : NA
(61) Patent of Addition to Application Number :NA
Filing Date :NA
(62) Divisional to Application Number :NA
Filing Date :NA

(71)**Name of Applicant :**
1)ILIAS-MEDICAL GMBH
Address of Applicant :Universittsstrae 136 44799 Bochum Germany
(72)**Name of Inventor :**
1)STRAUSS Andreas
2)GROSSER Albert

(57) Abstract :
The invention comprises a method for the production of a membrane module made of a mat consisting of hollow fibers whereby several hollow fibers of approximately the same length are arranged next to each other to form this mat. In this method the mat is wetted with a casting compound in certain areas and wound up onto a cylindrical winding core whereby a cylindrical body having a wall with at least one cast area is formed.

No. of Pages : 29 No. of Claims : 9

(12) PATENT APPLICATION PUBLICATION
(19) INDIA
(22) Date of filing of Application :20/11/2012
(21) Application No.10064/DELNP/2012 A
(43) Publication Date : 07/11/2014

(54) Title of the invention : ELECTRONIC SAFETY ELEVATOR

(51) International classification :B66B5/10,B66B5/06
(31) Priority Document No :NA
(32) Priority Date :NA
(33) Name of priority country :NA
(86) International Application No :PCT/JP2010/003505
Filing Date :26/05/2010
(87) International Publication No :WO 2011/148411
(61) Patent of Addition to Application Number :NA
Filing Date :NA
(62) Divisional to Application Number :NA
Filing Date :NA

(71)**Name of Applicant :**
1)HITACHI LTD.
Address of Applicant :6 6 Marunouchi 1 chome Chiyoda ku Tokyo 1008280 Japan
(72)**Name of Inventor :**
1)INOUE Shinsuke
2)FURUHASHI Masaya
3)FUKATA Hironori
4)OKAMURA Kiyoshi
5)YOSHIKAWA Toshifumi

(57) Abstract :
More-highly functional safety is achieved, and the number of mechanical safety switches is reduced. Thus the number of subjects of maintenance and inspection is decreased, and reliability is increased. Disclosed is an electric safety elevator wherein detection is made of the position ofa cage (20) which moves among a plurality of floors in a hoistway. The electric safety elevator is provided with a pulse generator (8) which outputs pulses according to the movement amounts ofthe cage (20); a position detection device (27) which detects that the cage (20) has reached a predetermined position; and a safety controller (2) which counts the number ofpulses after the predetermined position is detected, and which, when the counted value becomes equal to a value stored in advance, outputs instructions that correspond to the stored value.

No. of Pages : 27 No. of Claims : 11

(12) PATENT APPLICATION PUBLICATION
(19) INDIA
(22) Date of filing of Application :20/11/2012
(21) Application No.10065/DELNP/2012 A
(43) Publication Date : 07/11/2014

(54) Title of the invention : HEAT TRANSFER COMPOSITIONS

(51) International classification :C09K3/30,C09K5/04,A23L1/221
(31) Priority Document No :1008438.2
(32) Priority Date :20/05/2010
(33) Name of priority country :U.K.
(86) International Application No :PCT/GB2011/000772
Filing Date :20/05/2011
(87) International Publication No :WO 2011/144909
(61) Patent of Addition to Application Number :NA
Filing Date :NA
(62) Divisional to Application Number :NA
Filing Date :NA

(71)**Name of Applicant :**
1)MEXICHEM AMANCO HOLDING S.A. DE C.V.
Address of Applicant :Rio san Javier No. 10 Fraccionamiento Viveros del Rio Tlalnepantla estado de Mexico c.p. 54060 Mexico
(72)**Name of Inventor :**
1)LOW Robert E.

(57) Abstract :
The invention provides a heat transfer composition comprising (i) a first component selected from trans 3 3 3 tetrafluoropropene (R 1234ze(E)) 1 3 3 3 tetrafluoropropene (R 1234ze(Z)) and mixtures thereof; (ii) carbon dioxide (R 744); and (iii) a third component selected from difluoromethane (R 32) 1 1 1 2 tetrafluoroethane (R 134a) and mixtures thereof.

No. of Pages : 126 No. of Claims : 72

(12) PATENT APPLICATION PUBLICATION
(19) INDIA
(22) Date of filing of Application :20/11/2012
(21) Application No.10066/DELNP/2012 A
(43) Publication Date : 07/11/2014

(54) Title of the invention : METHOD AND SYSTEM FOR RADIO FREQUENCY IDENTIFICATION TAG USING REDUCED SET COMMUNICATION PROTOCOL

(51) International classification :H04L25/49,G06K19/077
(31) Priority Document No :12/776828
(32) Priority Date :10/05/2010
(33) Name of priority country :U.S.A.
(86) International Application No :PCT/US2011/000630
Filing Date :06/04/2011
(87) International Publication No :WO 2011/142796
(61) Patent of Addition to Application Number :NA
Filing Date :NA
(62) Divisional to Application Number :NA
Filing Date :NA

(71)**Name of Applicant :**
1)SENSORMATIC ELECTRONICS LLC
Address of Applicant :6600 Congress Avenue Boca Raton FL 33487 U.S.A.
(72)**Name of Inventor :**
1)ALICOT Jorge F.

(57) Abstract :
A method and tag for decoding a signal received from a radio frequency identification (RFID) reader. A signal is received from the RFID reader in which the signal has a series of pulses. A time frame between receipt of two consecutive pulses is measured to determine whether the pulses represent zero bits or one bits. A total pulse duration is calculated in which the total pulse duration represents a sum of the measured time frames for the signal. A command is decoded. The decoding is based on the total duration of the two pulses.

No. of Pages : 27 No. of Claims : 20

(12) PATENT APPLICATION PUBLICATION
(19) INDIA
(22) Date of filing of Application :20/11/2012
(21) Application No.10070/DELNP/2012 A
(43) Publication Date : 07/11/2014

(54) Title of the invention : METHOD FOR MEASURING THE COORDINATES OF WORKPIECES ON A COORDINATE MEASURING DEVICE

(51) International classification :G01B21/04,G01B7/012
(31) Priority Document No :102010018250.8
(32) Priority Date :23/04/2010
(33) Name of priority country :Germany
(86) International Application No :PCT/EP2011/055905
Filing Date :14/04/2011
(87) International Publication No :WO 2011/131557
(61) Patent of Addition to Application Number :NA
Filing Date :NA
(62) Divisional to Application Number :NA
Filing Date :NA

(71)**Name of Applicant :**
1)CARL ZEISS INDUSTRIELLE MESSTECHNIK GMBH
Address of Applicant :Carl Zeiss Strae 22 73447 Oberkochen Germany
(72)**Name of Inventor :**
1)FUCHS Anton
2)KERN Rudolf

(57) Abstract :
The invention relates to a method for measuring the coordinates of workpieces on a coordinate-measuring device having a pro.be head (4) comprising a probe (3) and a probe sensor (7) associated with the probe, generating a probe signal (23) when the probe contacts a workpiece, by means of which dimensional values are determined that represent the position of the probe head when the workpiece is contacted, wherein the probe head additionally comprises an acceleration sensor (65) generating an acceleration signal (67) when the probe head accelerates, wherein the probe signal and the acceleration signal are fed to a control and analysis unit (68) for analysis, and wherein the control and analysis unit determines said dimensional values in such a way that an analysis signal (69) is determined by subtracting the probe signal and the acceleration signal from each other, and the dimensional values representing the position of the probe head when contacting the workpiece are determined only using said analysis signal. The invention further relates to a corresponding coordinate-measuring device.

No. of Pages : 45 No. of Claims : 18

(12) PATENT APPLICATION PUBLICATION
(19) INDIA
(22) Date of filing of Application :20/11/2012
(21) Application No.10071/DELNP/2012 A
(43) Publication Date : 07/11/2014

(54) Title of the invention : THICKENER CONTAINING A CATIONIC POLYMER AND SOFTENING COMPOSITION CONTAINING SAID THICKENER IN PARTICULAR FOR TEXTILES

(51) International classification :C11D3/37,C11D3/00
(31) Priority Document No :1054095
(32) Priority Date :27/05/2010
(33) Name of priority country :France
(86) International Application No :PCT/FR2011/051208
Filing Date :27/05/2011
(87) International Publication No :WO 2011/148110
(61) Patent of Addition to Application Number :NA
Filing Date :NA
(62) Divisional to Application Number :NA
Filing Date :NA

(71)**Name of Applicant :**
1)S.P.C.M. SA
Address of Applicant :ZAC de Milieux F 42160 Andrezieux Boutheon France
(72)**Name of Inventor :**
1)BLONDEL Frdric

(57) Abstract :
Softening composition comprising at least one thickener containing a cationic polymer obtained by polymerization: - of a cationic monomer; 10 - of a monomer with a hydrophobic nature, of formula (I): wherein Rl =HorCH3 15 R2 =alkyl chain having at least 16 carbon atoms X =0, m 5, y = z = 0, or X = NH, m z 5, y =0, or X =NH, m y 5, z =0, - ofa nonionic monomer.

No. of Pages : 20 No. of Claims : 14

(12) PATENT APPLICATION PUBLICATION
(19) INDIA
(22) Date of filing of Application :20/11/2012
(21) Application No.10072/DELNP/2012 A
(43) Publication Date : 07/11/2014

(54) Title of the invention : STREPTOCOCCUS PNEUMONIAE VACCINE FORMULATIONS

(51) International classification :A61K39/09,A61P31/04
(31) Priority Document No :61/351804
(32) Priority Date :04/06/2010
(33) Name of priority country :U.S.A.
(86) International Application No :PCT/IB2011/052275
Filing Date :25/05/2011
(87) International Publication No :WO 2011/151760
(61) Patent of Addition to Application Number :NA
Filing Date :NA
(62) Divisional to Application Number :NA
Filing Date :NA

(71)**Name of Applicant :**
1)WYETH LLC
Address of Applicant :Five Giralda Farms Madison New Jersey 07940 U.S.A.
(72)**Name of Inventor :**
1)KHANDKE Lakshmi
2)RASHIDBAIGI Abbas

(57) Abstract :
An immunogenic composition comprising a plurality of capsular polysaccharides from Streptococcus pneumoniae serotypes 1 3 4 5 6A 6B 7F 9V 14 18C 19A 19F and 23F conjugated to a carrier protein and further comprising at least one preservative preferably 2 phenoxyethanol (2 PE). The preservative containing immunogenic compositions of the invention confer resistance to one or more micro organisms and are useful for producing multi dose vaccine formulations having advantageous properties with respect to long term stability of the different antigenic determinants in the immunogenic composition of choice. Related compositions and methods for measuring the efficacy of one or more preservatives in a vaccine formulation are also provided.

No. of Pages : 55 No. of Claims : 29

(12) PATENT APPLICATION PUBLICATION
(19) INDIA
(22) Date of filing of Application :20/11/2012
(21) Application No.10078/DELNP/2012 A
(43) Publication Date : 07/11/2014

(54) Title of the invention : PROCESS AND APPARATUS FOR PRODUCING A HOLLOW FIBRE MEMBRANE MODULE

(51) International classification :D06N1/00
(31) Priority Document No :10 2010 027 973.0
(32) Priority Date :20/04/2010
(33) Name of priority country :Germany
(86) International Application No :PCT/EP2011/056357
Filing Date :20/04/2011
(87) International Publication No : NA
(61) Patent of Addition to Application Number :NA
Filing Date :NA
(62) Divisional to Application Number :NA
Filing Date :NA

(71)**Name of Applicant :**
1)ILIAS-MEDICAL GMBH
Address of Applicant :Universittsstrae 136 44799 Bochum Germany
(72)**Name of Inventor :**
1)STRAUSS Andreas
2)GROSSER Albert

(57) Abstract :
The invention discloses a method for the production of a hollow fiber membrane module consisting of at least one strip-shaped mat with individual hollow fibers arranged next to each other in which method the mat is unwound from a first cylindrical winding core and then wound up onto a second cylindrical winding core in such a way that a wound-up hollow fiber bundle is formed whereby the second winding core is made up of at least one part. The method comprises the following steps: transporting the mat from the first winding core in the direction of the second winding core at a variable speed vm whereby the mat rests on a carrier element that ....

No. of Pages : 46 No. of Claims : 20

(12) PATENT APPLICATION PUBLICATION
(19) INDIA
(22) Date of filing of Application :21/11/2012
(21) Application No.10120/DELNP/2012 A
(43) Publication Date : 07/11/2014

(54) Title of the invention : ENDLESSLY CIRCULATING LINK CONVEYOR WITH ENERGY SUPPLY

(51) International classification :B24D
(31) Priority Document No :20 2010 006 220.9
(32) Priority Date :29/04/2010
(33) Name of priority country :Germany
(86) International Application No :PCT/EP2011/056646
Filing Date :27/04/2011
(87) International Publication No : NA
(61) Patent of Addition to Application Number :NA
Filing Date :NA
(62) Divisional to Application Number :NA
Filing Date :NA

(71)**Name of Applicant :**
1)IGUS GMBH
Address of Applicant :Spicher Str. 1a 51127 Koln Germany
(72)**Name of Inventor :**
1)FRANK BLAS‰
2)ANDREAS HERMEY

(57) Abstract :
An endlessly circulating link conveyor with energy supply from a stationary source comprises a plurality of links (1) that are connected to one another such that they can pivot with respect to one another, jointly form a link conveyor that follows a running path over deflection rollers (6) and can be driven in 15 circulating fashion, an energy guiding chain (30), one end of which travels with the link conveyor and the other end of which is arranged in rotating fashion within the circulatory path, and via which the link conveyor can be connected to supply lines (36), where the links (1) of the link conveyor display a 20 channel (2) for receiving distribution lines (40) and, laterally next to the channel, a guide groove (3) for guiding the energy guiding chain (30), where the upper face of at least one of the links (1) displays a mounting surface for conservers, and one of the links (1) is equipped for connecting the travelling 25 end (32) of the energy guiding chain (30),

No. of Pages : 18 No. of Claims : 11

(12) PATENT APPLICATION PUBLICATION
(19) INDIA
(22) Date of filing of Application :21/11/2012
(21) Application No.10122/DELNP/2012 A
(43) Publication Date : 07/11/2014

(54) Title of the invention : ELECTRICAL CONTACT MATERIAL

(51) International classification :H01J
(31) Priority Document No :2010-141246
(32) Priority Date :22/06/2010
(33) Name of priority country :Japan
(86) International Application No :PCT/JP2011/063199
Filing Date :09/06/2011
(87) International Publication No : NA
(61) Patent of Addition to Application Number :NA
Filing Date :NA
(62) Divisional to Application Number :NA
Filing Date :NA

(71)**Name of Applicant :**
1)A.L.M.T. Corp.
Address of Applicant :11-11 Shiba 1-chome Minato-ku Tokyo 105-0014 Japan
(72)**Name of Inventor :**
1)HATAKEYAMA Takashi
2)UENISHI Noboru
3)GOMA Norihito
4)SUZUKI Yasuhiko

(57) Abstract :
Provided is an electrical contact material excellent in welding resistance wear out resistance and temperature performance. The electrical contact material (31) includes 10% by mass or more and 30% by mass or less of tungsten carbide and 2% by mass or more and 5% by mass or less of graphite the remainder including silver and an unavoidable impurity the electrical contact material (31): having a relative density of 98.0% or more; an oxygen content of 350 ppm or less; an electrical conductivity of 60% IACS or more; and a transverse rupture strength of 330 MPa or more.

No. of Pages : 33 No. of Claims : 3

(12) PATENT APPLICATION PUBLICATION
(19) INDIA
(22) Date of filing of Application :21/11/2012
(21) Application No.10123/DELNP/2012 A
(43) Publication Date : 07/11/2014

(54) Title of the invention : ELECTRICAL CONTACT MATERIAL

(51) International classification :H01J
(31) Priority Document No :2010-141247
(32) Priority Date :22/06/2010
(33) Name of priority country :Japan
(86) International Application No :PCT/JP2011/063200
Filing Date :09/06/2011
(87) International Publication No : NA
(61) Patent of Addition to Application Number :NA
Filing Date :NA
(62) Divisional to Application Number :NA
Filing Date :NA

(71)**Name of Applicant :**
1)A.L.M.T. Corp.
Address of Applicant :11-11 Shiba 1-chome Minato-ku Tokyo 105-0014 Japan
(72)**Name of Inventor :**
1)HATAKEYAMA Takashi
2)UENISHI Noboru
3)GOMA Norihito
4)SUZUKI Yasuhiko

(57) Abstract :
Provided is an electrical contact material excellent in welding resistance wear-out resistance and temperature performance. The electrical contact material (31) includes more than 30% by mass and 55% by mass or less of tungsten carbide and 2% by mass or more and 5% by mass or less of graphite the remainder including silver and an unavoidable impurity the electrical contact material (31): having a relative density of 98.0% or more; an oxygen content of 450 ppm or less; an electrical conductivity of 45% IACS or more; and a transverse rupture strength of 350 MPa or more.

No. of Pages : 33 No. of Claims : 3

(12) PATENT APPLICATION PUBLICATION
(19) INDIA
(22) Date of filing of Application :21/11/2012
(21) Application No.10124/DELNP/2012 A
(43) Publication Date : 07/11/2014

(54) Title of the invention : PIPE THREAD PROTECTOR

(51) International classification :B65D
(31) Priority Document No :61/330,519
(32) Priority Date :03/05/2010
(33) Name of priority country :U.S.A.
(86) International Application No :PCT/US2011/034891
Filing Date :03/05/2011
(87) International Publication No : NA
(61) Patent of Addition to Application Number :NA
Filing Date :NA
(62) Divisional to Application Number :NA
Filing Date :NA

(71)**Name of Applicant :**
1)DRILLTEC PATENTS & TECHNOLOGIES CORPORATION
Address of Applicant :10875 Kempwood Houston TX 77043 U.S.A.
(72)**Name of Inventor :**
1)BRYAN C. BAKER
2)DAVID W. CLEM
3)JEFFREY D. LENDERMON

(57) Abstract :
A protector for protecting a pipe thread having a thread pitch PI, the protector having a central axis, a first end, a second end opposite the first end, and comprising: a base at the first end; an annular connecting member extending axially from the base to the second end, the connecting member having a radially inner surface and a radially outer surface; wherein the connecting member includes a helical thread extending radially outward from the radially outer surface or radially inward from the radially inner surface, the thread having a thread pitch P2 that is greater than the thread pitch PI of the pipe thread.

No. of Pages : 43 No. of Claims : 24

(12) PATENT APPLICATION PUBLICATION
(19) INDIA
(22) Date of filing of Application :21/11/2012
(21) Application No.10125/DELNP/2012 A
(43) Publication Date : 07/11/2014

(54) Title of the invention : NOVEL IRIDIUM/RHODIUM ANTI-CANCER COMPOUNDS

(51) International classification :C07C
(31) Priority Document No :1008584.3
(32) Priority Date :22/05/2010
(33) Name of priority country :U.K.
(86) International Application No :PCT/GB2011/000776
Filing Date :20/05/2011
(87) International Publication No : NA
(61) Patent of Addition to Application Number :NA
Filing Date :NA
(62) Divisional to Application Number :NA
Filing Date :NA

(71)**Name of Applicant :**
1)UNIVERSITY OF WARWICK
Address of Applicant :University House Kirby Corner Road Coventry CV4 8UW United Kingdom
(72)**Name of Inventor :**
1)HABTEMARIAM Abraha
2)LIU Zhe
3)SOLDEVILA Joan Josep
4)PIZARRO Ana Maria
5)SADLER Peter John

(57) Abstract :
The present invention relates to novel iridium and/or rhodium containing complexes for use as a cytotoxic such as an anti-cancer agent. There is also provided a method of preparing said compounds.

No. of Pages : 85 No. of Claims : 14

(12) PATENT APPLICATION PUBLICATION
(19) INDIA
(22) Date of filing of Application :21/11/2012
(21) Application No.10091/DELNP/2012 A
(43) Publication Date : 07/11/2014

(54) Title of the invention : GRINDSTONE GRINDSTONE MANUFACTURING METHOD BORING TOOL ABRASIVE GRAIN POSITIONING JIG AND RELIEF SURFACE FORMING METHOD

(51) International classification :B24D
(31) Priority Document No :2010-117363
(32) Priority Date :21/05/2010
(33) Name of priority country :Japan
(86) International Application No :PCT/JP2011/061578
Filing Date :19/05/2011
(87) International Publication No : NA
(61) Patent of Addition to Application Number :NA
Filing Date :NA
(62) Divisional to Application Number :NA
Filing Date :NA

(71)**Name of Applicant :**
1)HONDA MOTOR CO. LTD.
Address of Applicant :1-1 Minami-Aoyama 2-chome Minato-ku Tokyo 107-8556 Japan
(72)**Name of Inventor :**
1)MASAHIKO MASUZAKI
2)KOJI SAITO
3)MASATO IDE
4)SATOSHI KANBAYASHI
5)FUMIO SATO
6)TOSHIYA HIRATA
7)TAKASHI YOSHIDA

(57) Abstract :
A grindstone is provided with a base (211) and a plurality of abrasive grains (210) aligned in a row and bonded on a surface (212) of the base (211). Each of the s abrasive grains (210) has a relief surface (216) with a relief angle of a predetermined angle (f3).

No. of Pages : 66 No. of Claims : 15

(12) PATENT APPLICATION PUBLICATION
(19) INDIA
(22) Date of filing of Application :21/11/2012
(21) Application No.10093/DELNP/2012 A
(43) Publication Date : 07/11/2014

(54) Title of the invention : MANUFACTURE WORK MACHINE AND MANUFACTURE WORK SYSTEM

(51) International classification :B24D
(31) Priority Document No :2010-104661
(32) Priority Date :29/04/2010
(33) Name of priority country :Japan
(86) International Application No :PCT/JP2011/056060
Filing Date :15/03/2011
(87) International Publication No : NA
(61) Patent of Addition to Application Number :NA
Filing Date :NA
(62) Divisional to Application Number :NA
Filing Date :NA

(71)**Name of Applicant :**
1)FUJI MACHINE MFG. CO. LTD.
Address of Applicant :19 Chausuyama Yama-machi Chiryu-shi Aichi 4728686 Japan
(72)**Name of Inventor :**
1)KODAMA Seigo
2)IWAKI Noriaki
3)FURUKAWA Kazuya
4)YASUDA Kimihiko
5)NAGATO Kazuyoshi
6)TOMITA Takuya
7)KATO Masaki

(57) Abstract :
It is an object to enhance practical utility of a manufacture work machine configured to perform a manufacture work by a plurality of work-element performing apparatuses. In the manufacture work machine including the plurality of work-element performing apparatuses which are controlled by a central control device 130 136 each of the plurality of work-element performing apparatuses has an individual control device 90 etc. configured to control an operation of the corresponding work-element performing apparatus on the basis of a motion command transmitted from the central control device. The central control device is configured to transmit (174) according to one protocol a motion command in a specific programming language to the individual control device and the individual control device is configured to receive according to the one protocol the motion command and to convert (212) the received motion ...

No. of Pages : 69 No. of Claims : 25

(12) PATENT APPLICATION PUBLICATION
(19) INDIA
(22) Date of filing of Application :21/11/2012
(21) Application No.10096/DELNP/2012 A
(43) Publication Date : 07/11/2014

(54) Title of the invention : FIBROUS PLASTICIZED GYPSUM COMPOSITION

(51) International classification :C08F
(31) Priority Document No :12/766,854
(32) Priority Date :23/04/2010
(33) Name of priority country :U.S.A.
(86) International Application No :PCT/US2011/033403
Filing Date :21/04/2011
(87) International Publication No : NA
(61) Patent of Addition to Application Number :NA
Filing Date :NA
(62) Divisional to Application Number :NA
Filing Date :NA

(71)**Name of Applicant :**
1)CASTAGRA PRODUCTS INC.
Address of Applicant :5441 Kietzke Lane Second Floor Reno Nevada 89511 U.S.A.
(72)**Name of Inventor :**
1)ROOSEN Peter Paul
2)OKEEFE Thomas P.

(57) Abstract :
A composition comprising purposely oriented lignocellulosic fiber bound to an inorganic hydrate such as gypsum in the absence of water using a polymer. In a preferred embodiment the polymer is polyurethane. A process for producing the composition and a wide variety of applications of the composition are also described.

No. of Pages : 32 No. of Claims : 20

(12) PATENT APPLICATION PUBLICATION
(19) INDIA
(22) Date of filing of Application :21/11/2012
(21) Application No.10097/DELNP/2012 A
(43) Publication Date : 07/11/2014

(54) Title of the invention : PROCESS FOR PREPARING DITHIINETETRACARBOXYDIIMIDES

(51) International classification :C07C
(31) Priority Document No :10163519.1
(32) Priority Date :21/05/2010
(33) Name of priority country :EPO
(86) International Application No :PCT/EP2011/057829
Filing Date :16/05/2011
(87) International Publication No : NA
(61) Patent of Addition to Application Number :NA
Filing Date :NA
(62) Divisional to Application Number :NA
Filing Date :NA

(71)**Name of Applicant :**
1)BAYER CROPSCIENCE AG
Address of Applicant :Alfred-Nobel-Str. 50 40789 Monheim Germany
(72)**Name of Inventor :**
1)THOMAS HIMMLER
2)MARTIN KAUBMANN

(57) Abstract :
The present invention relates to a new process for preparing dithiine-tetracarboxy-diimides

No. of Pages : 15 No. of Claims : 10

(12) PATENT APPLICATION PUBLICATION
(19) INDIA
(22) Date of filing of Application :21/11/2012
(21) Application No.10098/DELNP/2012 A
(43) Publication Date : 07/11/2014

(54) Title of the invention : PUSH-BUTTON DISPENSER WITH COMPRESSED-GAS CAPSULE FOR BEVERAGE BOTTLES

(51) International classification :A47J
(31) Priority Document No :026/10
(32) Priority Date :28/04/2010
(33) Name of priority country :Switzerland
(86) International Application No :PCT/EP2011/056525
Filing Date :26/04/2011
(87) International Publication No : NA
(61) Patent of Addition to Application Number :NA
Filing Date :NA
(62) Divisional to Application Number :NA
Filing Date :NA

(71)**Name of Applicant :**
1)THE COCA-COLA COMPANY
Address of Applicant :One Coca-Cola Plaza NW Atlanta Georgia 30313 U.S.A.
(72)**Name of Inventor :**
1)SAMUEL O. NYAMBI
2)FRITZ SEELHOFER

(57) Abstract :
Push-button dispenser with compressed-gas capsule (7) for bottles (2), with a head which can be screwed onto the bottle (2) with a lateral discharge channel (4), a pushbutton (15) on its upper side and downwardly projecting suction tube (11), which is designed to extend as far as the bottom of the bottle (2), and opens out at the top into a valve device in the bead, which has a regulating means (39) that can be moved axially in relation to the bottle (2) and is biased in the closing direction by a spring (17), and can be opened by manual pressure being applied to the pushbutton (15), so that the pressure in the interior of the suction tube (11) can be reduced to ambient pressure, as a result of which liquid is expelled from the bottle (2), by way of the internal pressure prevailing in the bottle (2), out of the tower mouth opening of the suction tube (11) via the discharge channel (4),

No. of Pages : 27 No. of Claims : 11

(12) PATENT APPLICATION PUBLICATION
(19) INDIA
(22) Date of filing of Application :07/03/2012
(21) Application No.667/DEL/2012 A
(43) Publication Date : 07/11/2014

(54) Title of the invention : PANEER WITH EXTENDED SHELF-LIFE AND PROCESS FOR PREPARING OF THE SAME

(51) International classification :A23L
(31) Priority Document No :NA
(32) Priority Date :NA
(33) Name of priority country :NA
(86) International Application No :NA
Filing Date :NA
(87) International Publication No :NA
(61) Patent of Addition to Application Number :NA
Filing Date :NA
(62) Divisional to Application Number :NA
Filing Date :NA

(71)**Name of Applicant :**
1)G.B. PANT UNIVERSITY OF AGRICULTURE AND TECHNOLOGY
Address of Applicant :PANTNAGAR-263145, DISTT. UDHAM SINGH NAGAR, UTTARAKHAND, INDIA
(72)**Name of Inventor :**
1)REETA
2)KUMAR ANIL
3)SINGH GURMUKH
4)KUMBHAR BABURAO KRISHNA

(57) Abstract :
The present disclosure provides a coating formulation meant for coating of paneer which comprises whey protein concentrate, at least one plasticizer, at least one antimicrobial agent and water. The present disclosure also provides a coated paneer having extended shelf-life and a process for preparing the same.

No. of Pages : 30 No. of Claims : 10

(12) PATENT APPLICATION PUBLICATION
(19) INDIA
(22) Date of filing of Application :19/11/2012
(21) Application No.10006/DELNP/2012 A
(43) Publication Date : 07/11/2014

(54) Title of the invention : METHODS COMPOSITIONS AND KITS FOR THE TREATMENT OF MATRIX MINERALIZATION DISORDERS

(51) International classification	:A61K47/48,A61K31/7088,A61K38/17
(31) Priority Document No	:61/329,877
(32) Priority Date	:30/04/2010
(33) Name of priority country	:U.S.A.
(86) International Application No Filing Date	:PCT/CA2011/050258 :29/04/2011
(87) International Publication No	:WO 2011/134084
(61) Patent of Addition to Application Number Filing Date	:NA :NA
(62) Divisional to Application Number Filing Date	:NA :NA

(71)**Name of Applicant :**
1)ALEXION PHARMA INTERNATIONAL SRL
Address of Applicant :Avenue du Tribunal Fdral 34 1005 Lausanne Switzerland
(72)**Name of Inventor :**
1)CRINE Philippe
2)LEONARD Pierre

(57) Abstract :
The present invention provides methods compositions and kits for the treatment of matrix mineralization disorders such as hypophosphatasia. In particular the present invention provides polypeptides having a soluble alkaline phosphatase fused to an Fc domain of an immunoglobulin. Such polypeptides can be administered to patients e.g. subcutaneously to treat hypophosphatasia using enzyme replacement therapy. The invention also features nucleic acids encoding such polypeptides and the use of the nucleic acids for treating matrix mineralization disorders.

No. of Pages : 157 No. of Claims : 60

(12) PATENT APPLICATION PUBLICATION
(19) INDIA
(22) Date of filing of Application :19/11/2012
(21) Application No.10007/DELNP/2012 A
(43) Publication Date : 07/11/2014

(54) Title of the invention : METHOD AND DEVICE FOR FORKING CALL REQUEST TO CALLED USER ADDRESS

(51) International classification :H04W80/10
(31) Priority Document No :NA
(32) Priority Date :NA
(33) Name of priority country :NA
(86) International Application No :PCT/CN2010/072975
Filing Date :20/05/2010
(87) International Publication No :WO 2011/143821
(61) Patent of Addition to Application Number :NA
Filing Date :NA
(62) Divisional to Application Number :NA
Filing Date :NA

(71)**Name of Applicant :**
1)ALCATEL LUCENT
Address of Applicant :3, AVENUE OCTAVE GREARD PARIS 75007, France
(72)**Name of Inventor :**
1)CUI Hong
2)ZHAO Ruteng

(57) Abstract :
A method and device for forking a call request to a first registered called user address of multiple registered called user addresses in a network device is provided by the present invention. The method includes: obtaining forking related information which corresponds t o public user identifier and denotes forking sequence relation between at least one call ing number and multiple registered called user addresses; receiving a call request from a calling user terminal device; determining a first registered called user address in multiple registered called user addresses according to the number of the calling user terminal device and the forking related in formation corresponding to public user identifier; and forking the call request to the first registered called user address. For the calling number recorded in the forking related information, there may be a forking solution different from the forking solution for the call request o f the calling number not recorded in the forking related infor mation. B y this method, it can b e enabled to adopt specific forking solution for some specific numbers, thereby satisfy a personalized demand of a user.

No. of Pages : 25 No. of Claims : 12

(12) PATENT APPLICATION PUBLICATION
(19) INDIA
(22) Date of filing of Application :19/11/2012
(21) Application No.10008/DELNP/2012 A
(43) Publication Date : 07/11/2014

(54) Title of the invention : METHOD AND DEVICE FOR STARTING AND STOPPING AN INTERNAL COMBUSTION ENGINE

(51) International classification :F02N11/08,B60L11/18
(31) Priority Document No :10 2010 029 210.9
(32) Priority Date :21/05/2010
(33) Name of priority country :Germany
(86) International Application No :PCT/EP2011/057127
Filing Date :04/05/2011
(87) International Publication No :WO 2011/144450
(61) Patent of Addition to Application Number :NA
Filing Date :NA
(62) Divisional to Application Number :NA
Filing Date :NA

(71)**Name of Applicant :**
1)ROBERT BOSCH GMBH
Address of Applicant :Postfach 30 02 20 70442 Stuttgart Germany
(72)**Name of Inventor :**
1)FUCHS Joerg

(57) Abstract :
A device for starting and stopping an internal combustion engine (60) of a motor vehicle is proposed, the internal combustion engine (60) is assigned an electric machine (80) for starting the internal combustion engine (60) and an electric energy accumulator (290), comprising a first switching means (10), in particular a push-button, and a second switching means (20), in particular a relay which is closed in the currentless state, wherein the first switching means (10) can assume a first state and a second state, and the second switching means (20) can assume a first state and a second state, wherein the electric machine (70) is connected in an electrically conductive manner to the electric energy accumulator (290) if the second switching means (20) assumes the first state and the first switching means (10) assumes the first state.

No. of Pages : 20 No. of Claims : 15

(12) PATENT APPLICATION PUBLICATION
(19) INDIA
(22) Date of filing of Application :13/03/2012
(21) Application No.725/DEL/2012 A
(43) Publication Date : 07/11/2014

(54) Title of the invention : FORMULATION AND EVALUATION OF FAST DISINTEGRATING TABLET OF METOCLOPRAMIDE HCL

(51) International classification :A61K
(31) Priority Document No :NA
(32) Priority Date :NA
(33) Name of priority country :NA
(86) International Application No :NA
Filing Date :NA
(87) International Publication No :NA
(61) Patent of Addition to Application Number :NA
Filing Date :NA
(62) Divisional to Application Number :NA
Filing Date :NA

(71)**Name of Applicant :**
1)PROF. K.K. JHA
Address of Applicant :C-1056, DDA FLATS, EAST OF LONI ROAD, DELHI-110093. India
2)SHAWETA SHARMA
3)SANJEEV KUMAR
4)TMU
(72)**Name of Inventor :**
1)PROF. K.K. JHA
2)SHAWETA SHARMA
3)SANJEEV KUMAR
4)TMU

(57) Abstract :
The objective of present invention is to develop fast disintegrating tablets of Metoclopramide HCI, comprising superdisintegrants crospovidone, croscarmellose sodium, L-HPC and sodium starch glycolate, with other excipients comprising lactose and microcrystalline cellulose as diluents, pregelatinzed starch as disintegrant and binder, aspartame as sweetening agent, talc as glidant and magnesium stearate and lubricant, and the present invention produced by direct compression technique.

No. of Pages : 27 No. of Claims : 10

(12) PATENT APPLICATION PUBLICATION
(19) INDIA
(22) Date of filing of Application :21/11/2012
(21) Application No.10112/DELNP/2012 A
(43) Publication Date : 07/11/2014

(54) Title of the invention : ELECTRIC CONSTRUCTION MACHINE

(51) International classification :H01J
(31) Priority Document No :2010-136384
(32) Priority Date :15/06/2010
(33) Name of priority country :Japan
(86) International Application No :PCT/JP2011/062978
Filing Date :06/06/2011
(87) International Publication No : NA
(61) Patent of Addition to Application Number :NA
Filing Date :NA
(62) Divisional to Application Number :NA
Filing Date :NA

(71)**Name of Applicant :**
1)HITACHI CONSTRUCTION MACHINERY CO. LTD.
Address of Applicant :5-1 Koraku 2-chome Bunkyo-ku Tokyo 112-8563 Japan
(72)**Name of Inventor :**
1)NOGUCHI Akira
2)YUNOUE Masayuki

(57) Abstract :
Provided is an electric construction machine that enables quick and easy replacement of the battery device while allowing for easy replacement of the battery device with different types of battery devices according to the progress of the battery technology. An upper swing structure 3 is made up of a vehicle main body 100 and a vehicle rear part 200. The battery device 31 is mounted on the vehicle rear part 200. The electric construction machine is configured so that the vehicle rear part 200 is attachable and detachable to/from a vehicle body frame 101 of the vehicle main body 100 using a bolt. A main frame 120 overhangs and extends in a longitudinal direction to reach the underside of the vehicle rear part 200.....

No. of Pages : 91 No. of Claims : 10

(12) PATENT APPLICATION PUBLICATION
(19) INDIA
(22) Date of filing of Application :21/11/2012
(21) Application No.10113/DELNP/2012 A
(43) Publication Date : 07/11/2014

(54) Title of the invention : A TEST KIT CARTRIDGE FOR DETECTING THE PRESENCE OF LIPOPOLYSACCHARIDE IN EXHALED BREATH CONDENSATE TO DIAGNOSE GRAM NEGATIVE PNEUMONIA

(51) International classification :A61B5/08,
(31) Priority Document No :60/577,641
(32) Priority Date :07/06/2004
(33) Name of priority country :U.S.A.
(86) International Application No :PCT/US2005/018232
Filing Date :24/05/2005
(87) International Publication No : NA
(61) Patent of Addition to Application Number :NA
Filing Date :NA
(62) Divisional to Application Number :6774/DELNP/2006
Filed on :15/11/2006

(71)**Name of Applicant :**
1)THE CHARLOTTE-MECKLENBURG HOSPITAL AUTHORITY
Address of Applicant :P.O. Box 32861 Charlotte NC 28232-2861 U.S.A.
(72)**Name of Inventor :**
1)JEFFREY A. KLINE
2)JACKELINE HERNANDEZ
3)JOHN ALBERT WATTS Jr.

(57) Abstract :
A test kit cartridge 200 for detecting the presence of lipopolysaccharide in exhaled breath condensate using the breath condensate device (10) ; wherein the test kit cartridge; comprises. (a) a housing; (b) a test module disposed within the housing, said test module utilizing a user-initiated chemical reaction to detect the presence of lipopolysaccharide in the exhaled breath condensate; and (c) a positive control module disposed within the housing adjacent to the test module, said positive control module having I ipopolysacch arid e disposed therein for showing a definite positive result for the presence of lipopolysaccharide for comparison with the test module.

No. of Pages : 56 No. of Claims : 11

(12) PATENT APPLICATION PUBLICATION
(19) INDIA
(22) Date of filing of Application :21/11/2012
(21) Application No.10114/DELNP/2012 A
(43) Publication Date : 07/11/2014

(54) Title of the invention : CASE FOR ACCOMMODATING FIBER CLEAVER

(51) International classification :A47J
(31) Priority Document No :2010-138374
(32) Priority Date :17/06/2010
(33) Name of priority country :Japan
(86) International Application No :PCT/JP2011/063096
Filing Date :08/06/2011
(87) International Publication No : NA
(61) Patent of Addition to Application Number :NA
Filing Date :NA
(62) Divisional to Application Number :NA
Filing Date :NA

(71)**Name of Applicant :**
1)SEI OPTIFRONTIER CO. LTD.
Address of Applicant :1 Taya-cho Sakae-ku Yokohama-shi Kanagawa 244-8589 Japan
2)SUMITOMO ELECTRIC INDUSTRIES LTD.
(72)**Name of Inventor :**
1)HASEGAWA Masahiro
2)NAKAZAWA Kiyoshi
3)HOMMA Toshihiko

(57) Abstract :
Disclosed is a case for acconlmodating a fiber cleaver, the case being capable of preventing the fiber cleaver from being damaged. A case 1 accommodating a fiber cleaver includes a base 30 and a lid 32 such that the lid is openably and closably provided 5 for the base 30 in an integrated fashion. The base 30 of the case has therein a positioning space 38 for the cleaver on its inner bottom surface, the positioning space 38 positioning a main body 5 included in a cleaver unit 3. Latches 39A and 39B protruding inwardly in the base 30 of the case are arranged on posilioning walls 35A and 35B defining part of the positioning space 38 for the cleaves. The latches 39A and 39B have a function of 10 retaining a support 8 of the main body 5 of the cleaver in a direction along the height of the base 5 of the case. The latch 39A further has a function of retaining a slider 15 included in the cleaver unit 3 in a sliding direction.

No. of Pages : 23 No. of Claims : 7

(12) PATENT APPLICATION PUBLICATION
(19) INDIA
(22) Date of filing of Application :13/03/2012
(21) Application No.727/DEL/2012 A
(43) Publication Date : 07/11/2014

(54) Title of the invention : FAST DISINTEGRATING ORAL DRUG DELIVERY SYSTEM TO INCREASE THE BIOAVAILABILITY

(51) International classification :A61K
(31) Priority Document No :NA
(32) Priority Date :NA
(33) Name of priority country :NA
(86) International Application No :NA
Filing Date :NA
(87) International Publication No :NA
(61) Patent of Addition to Application Number :NA
Filing Date :NA
(62) Divisional to Application Number :NA
Filing Date :NA

(71)**Name of Applicant :**
1)PROF. K.K. JHA
Address of Applicant :C-1056, DDA FLATS, EAST OF LONI ROAD, DELHI-110093. India
2)ANUJ MITTAL
3)NITIN KUMAR
4)TMU
(72)**Name of Inventor :**
1)PROF. K.K. JHA
2)ANUJ MITTAL
3)NITIN KUMAR
4)TMU

(57) Abstract :
Development of oral disintegrating tablets of Ondansetron HCI in order to attain the instantaneous pregastric release of the drug in upper gastrointestinal tract which resulting enhanced bioavailability of drug bypassing the first pass metabolism. The present worker prepared nine batches of oral disintegrating tablets of Ondansetron HCI by adopting superdisintegrant addition method. The superdisintegrants used in the study were crospovidone, croscarmellose sodium and sodium starch glycolate with other excipients such as microcrystalline cellulose & mannitol as diluents, sucralose as sweetening agent, clove oil as flavoring & mild local anesthetic agent and talc & magnesium stearate as glidant and lubricant respectively. Each batch did consist of varying concentrations of individual superdisintegrant incorporated in the formulation process.Various pre-compression physicochemical parameters of formulation blends were analyzed and results are obtained. The prepared tablets were evaluated for various post-compression parameters and results were depicted. Vitro release of each formulation was carried out on dissolution apparatus. The best drug release profile was seen with formulation F3 (containing crospovidone) in pH with phosphate buffer solution, and stimulated salivary fluid respectively. Results of accelerated stability testing revealed no physical and chemical changes in the tablets during 3 months study. The present worker has reported oral disintegrating tablet formulation with this particular drug and therefore the research in reference comprised of quite novel aspects of investigation.

No. of Pages : 29 No. of Claims : 9

(12) PATENT APPLICATION PUBLICATION
(19) INDIA
(22) Date of filing of Application :20/11/2012
(21) Application No.10068/DELNP/2012 A
(43) Publication Date : 07/11/2014

(54) Title of the invention : EXHAUST GAS PURIFICATION SYSTEM

(51) International classification :F01N3/02,F01N3/18,F01N3/24
(31) Priority Document No :2010126774
(32) Priority Date :02/06/2010
(33) Name of priority country :Japan
(86) International Application No :PCT/JP2011/060464
Filing Date :28/04/2011
(87) International Publication No :WO 2011/152165
(61) Patent of Addition to Application Number :NA
Filing Date :NA
(62) Divisional to Application Number :NA
Filing Date :NA

(71)**Name of Applicant :**
1)YANMAR CO.LTD.
Address of Applicant :1 9 Tsurunocho Kita ku Osaka shi Osaka 5308311 Japan
(72)**Name of Inventor :**
1)NOMA Yasuo
2)TOGASHI Taichi

(57) Abstract :
Disclosed i s an exhaust gas purification system intended t o improve fuel consumption and prevent the dilution o f engine oil when regenerating an exhaust gas purification device (50). The exhaust gas purification sys tem i s provided with the exhaust gas purification device (50) disposed i n an exhaust path (77) o f a common-rail en gine (70), and i s configured so that a plurality o f regenera tion modes for burning and removing a particulate sub stance accumulated within the exhaust gas purification d e vice (50) can b e performed. The exhaust gas purification system has an initialization regeneration (forced regenera tion) mode, as one o f the plurality o f regeneration modes, wherein fuel i s supplied t o the inside o f the exhaust gas purification device (50) b y a post injection (E) regardless o f the residual capacity o f the exhaust gas purification d e vice (50) when an accumulated drive time (Te) o f an en gine (70) reaches o r exceeds a predetermined time (TO).

No. of Pages : 88 No. of Claims : 5

(12) PATENT APPLICATION PUBLICATION
(19) INDIA
(22) Date of filing of Application :20/11/2012
(21) Application No.10069/DELNP/2012 A
(43) Publication Date : 07/11/2014

(54) Title of the invention : METHOD AND SYSTEM FOR DETERMINING ELEVATOR CAR POSITION

(51) International classification :B66B1/36,B66B1/34,B66B3/00
(31) Priority Document No :NA
(32) Priority Date :NA
(33) Name of priority country :NA
(86) International Application No :PCT/US2010/038798
Filing Date :16/06/2010
(87) International Publication No :WO 2011/159290
(61) Patent of Addition to Application Number :NA
Filing Date :NA
(62) Divisional to Application Number :NA
Filing Date :NA

(71)**Name of Applicant :**
1)OTIS ELEVATOR COMPANY
Address of Applicant :Ten Farm Springs Road Farmington Connecticut 06032 U.S.A.
(72)**Name of Inventor :**
1)GARFINKEL Michael
2)THEBEAU Ronnie E.
3)WATTERSON Leslie C.
4)LEE SuCheol
5)YAMANE Kensaku

(57) Abstract :
A system for monitoring elevator car travel includes a plurality of bi stable sensors (12) traveling with an elevator car (10); a plurality of sense elements (20) positioned along a path of the sensors (12); the sense elements (20) causing the sensors (12) to assume one of a first state and a second state; wherein states of the sensors (12) define a zone code (30) identifying a zone corresponding to the elevator car (10) position the zone code (30) being a gray code.

No. of Pages : 14 No. of Claims : 20

(12) PATENT APPLICATION PUBLICATION
(19) INDIA
(22) Date of filing of Application :06/02/2012
(21) Application No.323/DEL/2012 A
(43) Publication Date : 07/11/2014

(54) Title of the invention : BIO-FORMULATION OF A BIO-PESTICIDE AND A PROCESS FOR PREPARING THE SAME

(51) International classification :C12N
(31) Priority Document No :NA
(32) Priority Date :NA
(33) Name of priority country :NA
(86) International Application No :NA
Filing Date :NA
(87) International Publication No :NA
(61) Patent of Addition to Application Number :NA
Filing Date :NA
(62) Divisional to Application Number :NA
Filing Date :NA

(71)**Name of Applicant :**
1)INDIAN COUNCIL OF AGRICULTURAL RESEARCH
Address of Applicant :KRISHI BHAWAN, DR. RAJINDRA PRASAD ROAD, NEW DELHI-110114, INDIA
(72)**Name of Inventor :**
1)LODHA SATISH
2)MAWAR RITU

(57) Abstract :
The present disclosure relates to a bio-pesticide comprising: Bacillus firmus as a bio-control agent in a population of about 28.6x107 to about 13.6x108 colony forming units per gm of the total mass of the bio-pesticide, at least one growth substrate in an amount of about 20 to about 21% of the total mass of the bio-pesticide formulation and at least one carrier in an amount of about 79 to about 80 % of the total mass of the bio-pesticide formulation.

No. of Pages : 28 No. of Claims : 15

(12) PATENT APPLICATION PUBLICATION
(19) INDIA
(22) Date of filing of Application :12/11/2012
(21) Application No.9798/DELNP/2012 A
(43) Publication Date : 07/11/2014

(54) Title of the invention : REDUCTION OF THE STRIP TENSION OF ROLLING STOCK BETWEEN TWO ROLLING UNITS TO A MINIMUM

(51) International classification :B62D
(31) Priority Document No :A735/2010
(32) Priority Date :30/04/2010
(33) Name of priority country :Austria
(86) International Application No :PCT/EP2011/056079
Filing Date :18/04/2011
(87) International Publication No : NA
(61) Patent of Addition to Application Number :NA
Filing Date :NA
(62) Divisional to Application Number :NA
Filing Date :NA

(71)**Name of Applicant :**
1)SIEMENS VAI METALS TECHNOLOGIES GMBH
Address of Applicant :Turmstrae 44 A-4031 Linz Austria
(72)**Name of Inventor :**
1)GERALD ECKERSTORFER
2)ANSGAR GRUSS
3)OTTO SCHMID

(57) Abstract :
The invention relates to the reduction of the strip tension of rolling stock (1) between two rolling units to a minimum. The invention is based on the object of making it possible to reduce the strip tension between two successive rolling units to a minimum in a simple manner. This object is achieved by a method having the following method steps: transporting the rolling stock (1), by means of a roller table (5), between two rolling units (2, 25) which are in engagement with the rolling stock, wherein a rolling stock loop (6) is formed in a depression (26) arranged in a section (27) of the roller table (5) between the two rolling units (2, 25) , and the rolling stock loop (6) is supported by the roller table at least in one off-center portion (13, 14) of the section (27), wherein the supporting line (23) of the roller table (5) in this portion corresponds to the catenary curve of the free span; detecting a measured value of a loop depth (18) of the rolling stock loop (6) by means of a measuring device (7); calculating a desired value of the loop depth (18), in particular depending on the material, thickness and temperature of the rolling stoc]< (1), such that the desired value corresponds substantially to the free span; controlling the main drives and/or the gap adjustment of the rolling units (2, 25) by means of a control device (10) taking the desired value and the measured value of the loop depth (18) into consideration, such that the loop depth (18) corresponds as far as possible to the desired value.

No. of Pages : 33 No. of Claims : 15

(12) PATENT APPLICATION PUBLICATION
(19) INDIA
(22) Date of filing of Application :20/11/2012
(21) Application No.10058/DELNP/2012 A
(43) Publication Date : 07/11/2014

(54) Title of the invention : SCROLL REFRIGERATION COMPRESSOR

(51) International classification :F04C18/02,F04C28/26,F04C29/12
(31) Priority Document No :1054288
(32) Priority Date :02/06/2010
(33) Name of priority country :France
(86) International Application No :PCT/FR2011/051087
Filing Date :16/05/2011
(87) International Publication No :WO 2011/151554
(61) Patent of Addition to Application Number :NA
Filing Date :NA
(62) Divisional to Application Number :NA
Filing Date :NA

(71)**Name of Applicant :**
1)DANFOSS COMMERCIAL COMPRESSORS
Address of Applicant :Route Dpartementale 28 ZI Lieudit Les Communaux Reyrieux F 01600 Trevoux France
(72)**Name of Inventor :**
1)GINIES Pierre
2)ANCEL Christophe

(57) Abstract :
The invention relates to a compressor including: a stationary volute (8) and a moving volute (11) each comprising a plate (9, 12) provided with a scroll (10, 13), said scrolls defining variable-volume compression chambers (14); a delivery line (15) provided in the plate (9) of the stationary volute (8); a delivery port (27) arranged such as to establish a communication between the delivery line (15) and a delivery chamber (16); and a nonreturn device comprising (i) a valve seat (18) surrounding the delivery port (27) and (ii) a delivery valve (29) which can move between delivery port (27) opening and closing positions. The compressor comprises: at least one bypass passage (32) having a first end opening into the delivery line (15) at a point between the central compression chamber (14a) and the valve seat (28) and a second end opening into an intermediate compression chamber (14b) or into a low-pressure portion of the compressor, and at least one bypass valve (39) which can move between bypass passage (32, 35) closing and opening positions.

No. of Pages : 30 No. of Claims : 14

(12) PATENT APPLICATION PUBLICATION
(19) INDIA
(22) Date of filing of Application :20/11/2012
(21) Application No.10059/DELNP/2012 A
(43) Publication Date : 07/11/2014

(54) Title of the invention : DEVICE FOR SEPARATING AND MAINTAINING A DISTANCE BETWEEN A PERSON S FACE AND A PROTECTIVE EYE MASK HELD IN PLACE BY AN ELASTIC STRAP (SKI OR MOTOCROSS TYPE)

(51) International classification :A42B3/18
(31) Priority Document No :1002148
(32) Priority Date :21/05/2010
(33) Name of priority country :France
(86) International Application No :PCT/FR2011/000303
Filing Date :19/05/2011
(87) International Publication No :WO 2011/144827
(61) Patent of Addition to Application Number :NA
Filing Date :NA
(62) Divisional to Application Number :NA
Filing Date :NA

(71)**Name of Applicant :**
1)AIRFLAPS
Address of Applicant :49 rue la fontaine au Roi F 75011 Paris France
(72)**Name of Inventor :**
1)GISQUIˆRE Serge

(57) Abstract :
The invention relates to a device for separating, and maintaining a distance between, a persons face and a protective eye mask worn on a helmet. The device is formed by two symmetrical elements disposed on each side of the helmet. Each element is fonned by a flap (1) hinged to a support (2) by means of a rotation shaft (2). When the flap is positioned to the rear, the strap can be positioned normally. When the user pushes the flap forwards, the flap rotates through approximately 1800 and becomes the new support point for the mask instead of the face. The mask is then held in place by the tension of the strap and a lever (4) that presses against the mask. A roller (5), mounted on a shaft solidly connected to the flap, facilitates the movement of the flap under the strap. The device provides increased ventilation for the helmet wearer and allows the helmet to be taken off without the protective mask being removed.

No. of Pages : 11 No. of Claims : 8

(12) PATENT APPLICATION PUBLICATION
(19) INDIA
(22) Date of filing of Application :12/11/2012
(21) Application No.9814/DELNP/2012 A
(43) Publication Date : 07/11/2014

(54) Title of the invention : METHOD FOR THERMALLY CLEAVING ORGANIC WASTE HAVING HIGH MOLECULAR WEIGHT

(51) International classification :C07C
(31) Priority Document No :10 2010 014 768.0
(32) Priority Date :13/04/2010
(33) Name of priority country :Germany
(86) International Application No :PCT/DE2011/000220
Filing Date :03/03/2005
(87) International Publication No : NA
(61) Patent of Addition to Application Number :NA
Filing Date :NA
(62) Divisional to Application Number :NA
Filing Date :NA

(71)**Name of Applicant :**
1)NEXXOIL AG
Address of Applicant :Bleicherweg 45 CH-8027 Z¼rich Switzerland
(72)**Name of Inventor :**
1)THOMAS WILLNER

(57) Abstract :
A method for thermochemically converting organic waste material having high molecular weight into liquid combustible materials and fuels, comeprising the following steps: 10 feeding organic waste material into a reactor, heating the organic waste material to a temperatune between 250 °C and 500 °C while avoiding exceeding critical coking temperatures in the reactor, 15 feeding biogenic substances to the reactor, collecting and condensing the gases and vapors released from the mixture of organic waste material and biogenic substances, collecting of the condensate and lett_h g form 20 phases, removing the phase or phases contaaning liquid combustible materials and fuels.

No. of Pages : 17 No. of Claims : 10

(12) PATENT APPLICATION PUBLICATION
(19) INDIA
(22) Date of filing of Application :12/11/2012
(21) Application No.9815/DELNP/2012 A
(43) Publication Date : 07/11/2014

(54) Title of the invention : HYDROGEL

(51) International classification :C08F
(31) Priority Document No :2010-098942
(32) Priority Date :22/04/2010
(33) Name of priority country :Japan
(86) International Application No :PCT/JP2011/060342
Filing Date :21/04/2011
(87) International Publication No : NA
(61) Patent of Addition to Application Number :NA
Filing Date :NA
(62) Divisional to Application Number :NA
Filing Date :NA

(71)**Name of Applicant :**
1)TEIJIN LIMITED
Address of Applicant :6-7 Minamihommachi 1-Chome Chuo-Ku Osaka-Shi Osaka 541-0054 Japan
(72)**Name of Inventor :**
1)YUKA YAMAMOTO
2)HIROAKI KANEKO
3)MASAYA ITO
4)TAISHI TANAKA

(57) Abstract :
A hydrogel composed of a polyanionic polysaccharide derivative having a hydrophobic group introduced by covalent bonding and a salt solution with a salt concentration of 50 mM or more and 200 mM or less, the hydrogel having an aggregate 5 structure with an average particle diameter of 100 to 2000 nm in the diluted solution, as well as a method for manufacturing the hydrogel comprising the steps of preparing a mixture containing a polyanionic polysaccharide derivative having a hydrophobic group introduced and a salt solution with a salt concentration of 50 mM or more and 200 mM or less and subjecting the mixture to heat treatment. The hydrogel of the present invention has a 10 longterm stability and may be filtered using a porous filter having a pore diameter of 5 μm or more.

No. of Pages : 36 No. of Claims : 18

(12) PATENT APPLICATION PUBLICATION
(19) INDIA
(22) Date of filing of Application :19/11/2012
(21) Application No.10029/DELNP/2012 A
(43) Publication Date : 07/11/2014

(54) Title of the invention : HEAT TRANSFER COMPOSITIONS

(51) International classification :C07C
(31) Priority Document No :1008438.2
(32) Priority Date :20/05/2010
(33) Name of priority country :U.K.
(86) International Application No :PCT/GB2011/000771
Filing Date :20/05/2011
(87) International Publication No : NA
(61) Patent of Addition to Application Number :NA
Filing Date :NA
(62) Divisional to Application Number :NA
Filing Date :NA

(71)**Name of Applicant :**
1)MEXICHEM AMANCO HOLDING S.A. DE C.V.
Address of Applicant :Rio san Javier No. 10 Fraccionamiento Viveros del Rio Tlalnepantla Estado de Mexico
(72)**Name of Inventor :**
1)LOW Robert E.

(57) Abstract :
The invention provides a heat transfer composition comprising (i) a first component selected from trans-1 3 3 3-tetrafluoropropene (R-1234ze(E)) cis-1 3 3 3-tetrafluoropropene (R-1234ze(Z)) and mixtures thereof; (ii) carbon dioxide (R-744); and (iii) a third component selected from 2 3 3 3-tetrafluoropropene (R-1234yf) 3 3 3-trifluoropropene (R-1243zf) and mixtures thereof.

No. of Pages : 72 No. of Claims : 64

(12) PATENT APPLICATION PUBLICATION
(19) INDIA
(22) Date of filing of Application :19/11/2012
(21) Application No.10030/DELNP/2012 A
(43) Publication Date : 07/11/2014

(54) Title of the invention : METHOD AND APPARATUS FOR MANAGING INTERFERENCE IN A COMMUNICATION DEVICE

(51) International classification :H04N
(31) Priority Document No :61/326,206
(32) Priority Date :20/04/2010
(33) Name of priority country :U.S.A.
(86) International Application No :PCT/US2011/033228
Filing Date :20/04/2011
(87) International Publication No : NA
(61) Patent of Addition to Application Number :NA
Filing Date :NA
(62) Divisional to Application Number :NA
Filing Date :NA

(71)**Name of Applicant :**
1)PARATEK MICROWAVE INC.
Address of Applicant :22 Technology Way Nashua NH 03060 U.S.A.
(72)**Name of Inventor :**
1)MANSSEN Keith R.
2)GREENE Matthew R.
3)SMITH Wayne E.
4)SCHLUETER David M.
5)SPEARS John H.

(57) Abstract :
A system that incorporates teachings of the present disclosure may include for example a communication device having a controller to detect an existence of an interferer and determine a tuning state of a variable matching network based on whether the interferer exists and based on information from at least one of an open- loop or closed-loop feedback configuration. Additional embodiments are disclosed.

No. of Pages : 49 No. of Claims : 35

(12) PATENT APPLICATION PUBLICATION
(19) INDIA
(22) Date of filing of Application :20/11/2012
(21) Application No.10032/DELNP/2012 A
(43) Publication Date : 07/11/2014

(54) Title of the invention : MANUFACTURE WORK MACHINE

(51) International classification :B23B
(31) Priority Document No :2010-104661
(32) Priority Date :29/04/2010
(33) Name of priority country :Japan
(86) International Application No :PCT/JP2011/057812
Filing Date :29/03/2011
(87) International Publication No : NA
(61) Patent of Addition to Application Number :NA
Filing Date :NA
(62) Divisional to Application Number :NA
Filing Date :NA

(71)**Name of Applicant :**
1)FUJI MACHINE MFG. CO. LTD.
Address of Applicant :19 Chausuyama Yama-machi Chiryu-shi Aichi 4728686 Japan
(72)**Name of Inventor :**
1)KODAMA Seigo
2)IWAKI Noriaki
3)FURUKAWA Kazuya
4)ITO Takashi
5)TSUTSUMI Hideyuki

(57) Abstract :
It is an object to enhance practical utility of a manufacture work machine configured to perform a manufacture work by a plurality of work-element performing apparatuses. In the manufacture work machine including a plurality of work-element performing apparatuses 40 28 32 etc. and a central control device 130 136 configured to control the work-element performing apparatuses in a centralized manner such that a plurality of motion commands are sequentially transmitted each work-element performing apparatus has an individual control device 90 100 104 etc. configured to control an operation of each work-element performing apparatus and an operating device 58 72 78 etc. for performing a work element corresponding to each work-element performing apparatus. Each individual control device is configured to recognize a matter of the motion .....

No. of Pages : 87 No. of Claims : 7

(12) PATENT APPLICATION PUBLICATION
(19) INDIA
(22) Date of filing of Application :12/12/2011
(21) Application No.3604/DEL/2011 A
(43) Publication Date : 07/11/2014

(54) Title of the invention : A SOLAR HYBRID REFRIGERATOR WITH POWER BACK-UP.

(51) International classification :F25B27/00
(31) Priority Document No :NA
(32) Priority Date :NA
(33) Name of priority country :NA
(86) International Application No :NA
Filing Date :NA
(87) International Publication No :NA
(61) Patent of Addition to Application Number :NA
Filing Date :NA
(62) Divisional to Application Number :NA
Filing Date :NA

(71)**Name of Applicant :**
1)LG ELECTRONICS INDIA PVT. LIMITED
Address of Applicant :A-27, MOHAN COOPERATIVE INDUSTRIAL ESTATE, NEW DELHI, India
(72)**Name of Inventor :**
1)N.K. JAIN
2)BRIJESH KUMAR SHARMA
3)INDERPAL SINGH
4)SACHIN KUMAR

(57) Abstract :
This invention relates to a solar hybrid refrigerator with power back-up comprising of a solar panel connected to a battery through charge controller, wherein the battery is provided in connection with compressor of the refrigerator through Solar Assisted Refrigerator Controller (SARC). The solar assisted refrigerator controller comprises of a battery charging unit connected to a main control unit through charge controller/relay/bypass switch. Said charge controller/relay/by pass switch is also connected to AC main and the control unit is provided in connection with battery, DC-DC converter, DC-AC Converter Section and output filter.

No. of Pages : 17 No. of Claims : 7

(12) PATENT APPLICATION PUBLICATION
(19) INDIA
(22) Date of filing of Application :15/11/2012
(21) Application No.9897/DELNP/2012 A
(43) Publication Date : 07/11/2014

(54) Title of the invention : ENDORIBONUCLEASE COMPOSITIONS AND METHODS OF USE THEREOF

(51) International classification :C12P
(31) Priority Document No :61/333,163
(32) Priority Date :10/05/2010
(33) Name of priority country :U.S.A.
(86) International Application No :PCT/US2011/035775
Filing Date :09/05/2011
(87) International Publication No : NA
(61) Patent of Addition to Application Number :NA
Filing Date :NA
(62) Divisional to Application Number :NA
Filing Date :NA

(71)**Name of Applicant :**
1)THE REGENTS OF THE UNIVERSITY OF CALIFORNIA
Address of Applicant :1111 Franklin Street 12th Floor Oakland California 94607 U.S.A.
(72)**Name of Inventor :**
1)HAURWITZ Rachel E.
2)DOUDNA Jennifer A.
3)WIEDENHEFT Blake
4)JINEK Martin

(57) Abstract :
The present disclosure provides variant Csy4 endoribonucleases nucleic acids encoding the variant Csy4 endoribonucleases and host cells genetically modified with the nucleic acids. The variant Csy4 endoribonucleases find use in a variety of applications which are also provided. The present disclosure also provides methods of detecting a specific sequence in a target polyribonucleotide; and methods of regulating production of a target RNA in a eukaryotic cell.

No. of Pages : 98 No. of Claims : 35

(12) PATENT APPLICATION PUBLICATION
(19) INDIA
(22) Date of filing of Application :21/11/2012
(21) Application No.10100/DELNP/2012 A
(43) Publication Date : 07/11/2014

(54) Title of the invention : PUSH-BUTTON DISPENSER FOR BOTTLES WITH CARBONATED BEVERAGES

(51) International classification :A47J
(31) Priority Document No :625/10
(32) Priority Date :28/04/2010
(33) Name of priority country :Switzerland
(86) International Application No :PCT/EP2011/056522
Filing Date :26/04/2011
(87) International Publication No : NA
(61) Patent of Addition to Application Number :NA
Filing Date :NA
(62) Divisional to Application Number :NA
Filing Date :NA

(71)**Name of Applicant :**
1)THE COCA-COLA COMPANY
Address of Applicant :One Coca-Cola Plaza NW Atlanta Georgia 30313 U.S.A.
(72)**Name of Inventor :**
1)SAMUEL O. NYAMBI
2)FRITZ SEELHOFER

(57) Abstract :
Pushbutton dispenser for bottles with carbonated beverages with a head (1) able to be screwed onto a bottle with a lateral pouring channel (15), a pushbutton (16) on its top, and a suction tube (10) projecting downwards, which is meant to reach down to the bottom of the bottle (20) to be equipped, and which opens out at the top into a valve device in the head (1), which exhibits a regulating means (5) able to be moved axially relative to the bottle (20), which is acted upon by a spring (3) in the closing direction, and is able to be acted upon for opening from above manually with a pressing on the pushbutton (16), so that the pressure in the interior of the suction tube (10) is able to be reduced to the ambient pressure, through which liquid can be expelled from the bottle (20) through the inner pressure prevailing in the bottle (20) from the lower mouth of the suction tube (10) via the pouring channel (15), characterized in that the suction tube (10) is manufactured from a elastomeric plastic, and its outer and inner cross sections are so configured that with an inner pressure reduced to the ambient pressure it can be made narrow by deformation in its flowthrough cross section in relation to the increased pressure prevailing from outside.

No. of Pages : 30 No. of Claims : 13

(12) PATENT APPLICATION PUBLICATION
(19) INDIA
(22) Date of filing of Application :12/03/2012
(21) Application No.701/DEL/2012 A
(43) Publication Date : 07/11/2014

(54) Title of the invention : FORMULATION & EVALUATION OF MOUTH DISINTEGRATING TABLET OF CARVEDILOL

(51) International classification :A61K
(31) Priority Document No :NA
(32) Priority Date :NA
(33) Name of priority country :NA
(86) International Application No :NA
Filing Date :NA
(87) International Publication No :NA
(61) Patent of Addition to Application Number :NA
Filing Date :NA
(62) Divisional to Application Number :NA
Filing Date :NA

(71)**Name of Applicant :**
1)PROF. K. K. JHA
Address of Applicant :C-1056, DDA FLATS, EAST OF LONI ROAD, DELHI-110093. India
2)ANUJ MITTAL
3)SUNNY NAIN, TMU
(72)**Name of Inventor :**
1)PROF. K.K. JHA
2)ANUJ MITTAL
3)SUNNY NAIN, TMU

(57) Abstract :
The objective of the present invention is to develop oral disintegrating tablet formulation of Carvedilol in order to attain the instantaneous pre-gastric release of the drug in upper gastrointestinal tract which result enhanced bioavailability of the drug bypassing the first pass metabolism by direct compression method where in superdisintegrants comprising croscarmellose sodium and sodium starch glycolate with other excipients comprising -cyclodextrin as complexing agent to enhance the solubility of carvedilol, Sodium bi-carbonate and starch rice as disintegrants, microcrystalline cellulose and mannitol as diluent, aspartame as sweetening agent, talc as glidant and magnesium stearate as lubricant,

No. of Pages : 20 No. of Claims : 8

(12) PATENT APPLICATION PUBLICATION
(19) INDIA
(22) Date of filing of Application :15/11/2012
(21) Application No.9901/DELNP/2012 A
(43) Publication Date : 07/11/2014

(54) Title of the invention : INNOVATIVE DISCOVERY OF THERAPEUTIC DIAGNOSTIC AND ANTIBODY COMPOSITIONS RELATED TO PROTEIN FRAGMENTS OF THREONYL TRNA SYNTHETASES

(51) International classification :C12P
(31) Priority Document No :61/328,373
(32) Priority Date :27/04/2010
(33) Name of priority country :U.S.A.
(86) International Application No :PCT/US2011/034207
Filing Date :27/04/2011
(87) International Publication No : NA
(61) Patent of Addition to Application Number :NA
Filing Date :NA
(62) Divisional to Application Number :NA
Filing Date :NA

(71)**Name of Applicant :**
1)ATYR PHARMA INC.
Address of Applicant :3545 John Hopkins Court Suite #250 San Diego California 92121 U.S.A.
2)PANGU BIOPHARMA LIMITED
(72)**Name of Inventor :**
1)GREENE Leslie Ann
2)CHIANG Kyle P.
3)HONG Fei
4)VASSEROT Alain P.
5)LO Wing-Sze
6)WATKINS Jeffry D.
7)MENDLEIN John D.
8)QUINN Cheryl L.

(57) Abstract :
Provided are compositions comprising newly identified protein fragments of aminoacyl-tRNA synthetases polynucleotides that encode them and complements thereof related agents and methods of use thereof in diagnostic drug discovery research and therapeutic applications.

No. of Pages : 234 No. of Claims : 125

(12) PATENT APPLICATION PUBLICATION
(19) INDIA
(22) Date of filing of Application :15/11/2012
(21) Application No.9902/DELNP/2012 A
(43) Publication Date : 07/11/2014

(54) Title of the invention : INNOVATIVE DISCOVERY OF THERAPEUTIC DIAGNOSTIC AND ANTIBODY COMPOSITIONS RELATED TO PROTEIN FRAGMENTS OF ASPARAGINYL TRNA SYNTHETASES

(51) International classification :C12P
(31) Priority Document No :61/329,477
(32) Priority Date :29/04/2010
(33) Name of priority country :U.S.A.
(86) International Application No :PCT/US2011/034388
Filing Date :28/04/2011
(87) International Publication No : NA
(61) Patent of Addition to Application Number :NA
Filing Date :NA
(62) Divisional to Application Number :NA
Filing Date :NA

(71)**Name of Applicant :**
1)ATYR PHARMA INC.
Address of Applicant :3545 John Hopkins Court Suite #250 San Diego CA 92121 U.S.A.
2)PANGU BIOPHARMA LIMITED
(72)**Name of Inventor :**
1)GREENE Leslie Ann
2)CHIANG Kyle P.
3)HONG Fei
4)VASSEROT Alain P.
5)LO Wing-Sze
6)WATKINS Jeffry D.
7)MENDLEIN John D.
8)QUINN Cheryl L.

(57) Abstract :
Provided are compositions comprising newly identified protein fragments of aminoacyl-tRNA synthetases polynucleotides that encode them and complements thereof related agents and methods of use thereof in diagnostic drug discovery research and therapeutic applications.

No. of Pages : 245 No. of Claims : 125

(12) PATENT APPLICATION PUBLICATION
(19) INDIA
(22) Date of filing of Application :15/11/2012
(21) Application No.9903/DELNP/2012 A
(43) Publication Date : 07/11/2014

(54) Title of the invention : INNOVATIVE DISCOVERY OF THERAPEUTIC DIAGNOSTIC AND ANTIBODY COMPOSITIONS RELATED TO PROTEIN FRAGMENTS OF VALYL TRNA SYNTHETASES

(51) International classification :C12P
(31) Priority Document No :61/329,470
(32) Priority Date :29/04/2010
(33) Name of priority country :U.S.A.
(86) International Application No :PCT/US2011/034626
Filing Date :29/04/2011
(87) International Publication No : NA
(61) Patent of Addition to Application Number :NA
Filing Date :NA
(62) Divisional to Application Number :NA
Filing Date :NA

(71)**Name of Applicant :**
1)ATYR PHARMA INC.
Address of Applicant :3545 John Hopkins Court Suite #250 San Diego CA 92121 U.S.A.
2)PANGU BIOPHARMA LIMITED
(72)**Name of Inventor :**
1)GREENE Leslie Ann
2)CHIANG Kyle P.
3)HONG Fei
4)VASSEROT Alain P.
5)LO Wing-Sze
6)WATKINS Jeffry D.
7)MENDLEIN John D.
8)QUINN Cheryl L.

(57) Abstract :
Provided are compositions comprising newly identified protein fragments of aminoacyl-tRNA synthetases polynucleotides that encode them and complements thereof related agents and methods of use thereof in diagnostic drug discovery research and therapeutic applications.

No. of Pages : 299 No. of Claims : 125

(12) PATENT APPLICATION PUBLICATION
(19) INDIA
(22) Date of filing of Application :16/11/2012
(21) Application No.9957/DELNP/2012 A
(43) Publication Date : 07/11/2014

(54) Title of the invention : PROCESSES FOR PRODUCING CAPROLACTAM AND DERIVATIVES THEREOF FROM FERMENTATION BROTHS CONTAINING DIAMMONIUM ADIPATE MONOAMMONIUM ADIPATE AND/OR ADIPIC ACID

(51) International classification :C07C
(31) Priority Document No :61/355,189
(32) Priority Date :16/06/2010
(33) Name of priority country :U.S.A.
(86) International Application No :PCT/US2011/039898
Filing Date :10/06/2011
(87) International Publication No : NA
(61) Patent of Addition to Application Number :NA
Filing Date :NA
(62) Divisional to Application Number :NA
Filing Date :NA

(71)**Name of Applicant :**
1)BIOAMBER S.A.S.
Address of Applicant :Route de Pomacle F-51110 Bazancourt France
(72)**Name of Inventor :**
1)FRUCHEY Olan S.
2)MANZER Leo E.
3)DUNUWILA Dilum
4)KEEN Brian T.
5)ALBIN Brooke A.
6)CLINTON Nye A.
7)DOMBEK Bernard D.

(57) Abstract :
Processes for making caprolactam (CL) from monoammonium adipate (MAA) and/or adipic aicd (AA) obtained from a clarified diammonium adipate-containing (DAA- containing) fermentation broth or MAA-containing fermentation broth and converting the MAA or AA to the CL with hydrogen in the presence of a catalyst at selected temperatures and pressures.

No. of Pages : 31 No. of Claims : 9

(12) PATENT APPLICATION PUBLICATION
(19) INDIA
(22) Date of filing of Application :16/11/2012
(21) Application No.9958/DELNP/2012 A
(43) Publication Date : 07/11/2014

(54) Title of the invention : PROCESSES FOR THE PRODUCTION OF PYRROLIDONES

(51) International classification :C07C
(31) Priority Document No :61/346,155
(32) Priority Date :19/05/2010
(33) Name of priority country :U.S.A.
(86) International Application No :PCT/US2011/036768
Filing Date :07/05/2011
(87) International Publication No : NA
(61) Patent of Addition to Application Number :NA
Filing Date :NA
(62) Divisional to Application Number :NA
Filing Date :NA

(71)**Name of Applicant :**
1)BIOAMBER S.A.S
Address of Applicant :Route De Pomacle F-51119 Bazancourt France
(72)**Name of Inventor :**
1)FRUCHEY Olan S.
2)MANZER Leo E.
3)DUNUWILA Dilum
4)KEEN Brian T.
5)CLINTON Nye A.
6)ALBIN Brooke A.
7)DOMBEK Bernard D.

(57) Abstract :
Processes for making pyrrolidones include providing a clarified diammonium succinate (DAS)-containing and/or monoammonium succinate (MAS)-containing fermentation broth; distilling the broth under super atmospheric pressure at a temperature of greater than 100°C to about 300°C to form an overhead that includes water and ammonia and a liquid bottoms that includes SA and at least about 20 wt% water; cooling and/or evaporating the bottoms to attain a temperature and composition sufficient to cause the bottoms to separate into a liquid portion and a solid portion that is substantially pure SA; separating the solid portion from the liquid portion; and converting the solid SA portion to pyrrolidones.

No. of Pages : 33 No. of Claims : 7

(12) PATENT APPLICATION PUBLICATION
(19) INDIA
(22) Date of filing of Application :16/11/2012
(21) Application No.9960/DELNP/2012 A
(43) Publication Date : 07/11/2014

(54) Title of the invention : CHAIN CASE STRUCTURE FOR ENGINE

(51) International classification :B27B
(31) Priority Document No :2010-123857
(32) Priority Date :31/05/2010
(33) Name of priority country :Japan
(86) International Application No :PCT/JP2011/062187
Filing Date :27/05/2011
(87) International Publication No : NA
(61) Patent of Addition to Application Number :NA
Filing Date :NA
(62) Divisional to Application Number :NA
Filing Date :NA

(71)**Name of Applicant :**
1)SUZUKI MOTOR CORPORATION
Address of Applicant :300 Takatsuka-Cho Minami-Ku Hamamatsu-Shi Shizuoka-Ken 432-8611 Japan
(72)**Name of Inventor :**
1)TAKEUCHI Kensuke
2)KURODA Junji

(57) Abstract :
In a chain case structure for an engine when a chain case is viewed in a direction of a crank shaft of the engine both side portions of a mounting bracket unit in a width direction thereof are disposed so as to extend to one of left edge and right edge of the chain case and to the upper edge thereof respectively a fastener adapted to fasten to the engine body is mounted to a lower portion of the mounting bracket unit the cylinder unit is arranged under the fastener with an outer circumferential surface of the cylinder unit being coupled to the mounting bracket unit and a reinforcement rib is disposed under the mounting bracket unit so as to extend downward from the mounting bracket unit by traversing the cylinder unit.

No. of Pages : 32 No. of Claims : 5

(12) PATENT APPLICATION PUBLICATION
(19) INDIA
(22) Date of filing of Application :16/11/2012
(21) Application No.9961/DELNP/2012 A
(43) Publication Date : 07/11/2014

(54) Title of the invention : A METHOD AND A DEVICE FOR SEPARATING PARTICLES OF A DETERMINED SYNTHETIC MATERIAL FROM PARTICLES OF DIFFERENT SYNTHETIC MATERIALS

(51) International classification :H02J
(31) Priority Document No :RE2010A000045
(32) Priority Date :16/11/2012
(33) Name of priority country :Italy
(86) International Application No :PCT/IB2011/001055
Filing Date :13/05/2011
(87) International Publication No : NA
(61) Patent of Addition to Application Number :NA
Filing Date :NA
(62) Divisional to Application Number :NA
Filing Date :NA

(71)**Name of Applicant :**
1)CASSANI Stefano
Address of Applicant :51 Via Casola Canina I-40026 Imola Bologna Italy
(72)**Name of Inventor :**
1)CASSANI Stefano

(57) Abstract :
A method for separating a synthetic material in granular form from a loose mass of various synthetic materials comprising following operations: conveying the granular mass along a trajectory comprising a rubbing surface subjecting the mass falling down from the rubbing surface to an electrical field collecting at least one of the masses of granules separated by the electrical field wherein the mass is made to advances in a single layer on the rubbing surface while maintaining the single layer into contact with the rubbing surface the rubbing surface being subjected to repeated acceleration in opposite directions contained in the plane of the rubbing surface or tangential thereto to move the mass on the surface in order to improve the electrostatic charge the rubbing surface being clad with or made of a material having triboelectric properties which are intermediate with respect to triboelectric properties of the granular mass...

No. of Pages : 30 No. of Claims : 24

(12) PATENT APPLICATION PUBLICATION
(19) INDIA
(22) Date of filing of Application :16/11/2012

(21) Application No.9962/DELNP/2012 A
(43) Publication Date : 07/11/2014

(54) Title of the invention : TOBACCO SMOKE FILTER

(51) International classification :A47J
(31) Priority Document No :1008725.2
(32) Priority Date :25/05/2010
(33) Name of priority country :U.K.
(86) International Application No :PCT/GB2011/000783
Filing Date :23/05/2011
(87) International Publication No : NA
(61) Patent of Addition to Application Number :NA
Filing Date :NA
(62) Divisional to Application Number :NA
Filing Date :NA

(71)**Name of Applicant :**
1)Filtrona Filter Products Development Co. Pte. Ltd
Address of Applicant :238A Thomson Road #25-04/05 Novena Square Singapore 307684
(72)**Name of Inventor :**
1)PENROSE Graham
2)TAYLOR Michael John

(57) Abstract :
A tobacco smoke filter or filter element including a coherent web comprising a first filter material and a second filter material and optionally one or more further filter materials; wherein the first filter material comprises a cellulose acetate tow having a total denier of 44 000 or less and a filament denier of from 2.1 to 8.3 (for example 2.1 to 6.3 or 6.5 to 8.3); and the second filter material comprises a paper.

No. of Pages : 16 No. of Claims : 21

(12) PATENT APPLICATION PUBLICATION
(19) INDIA
(22) Date of filing of Application :19/11/2012
(21) Application No.10023/DELNP/2012 A
(43) Publication Date : 07/11/2014

(54) Title of the invention : UDP GLUCOSE 4 EPIMERASE USEFUL FOR IMPROVING AGRONOMIC PERFORMANCE OF PLANTS

(51) International classification :C12N15/52,C12N15/63,C12N15/82
(31) Priority Document No :201010178405.6
(32) Priority Date :17/05/2010
(33) Name of priority country:China
(86) International Application No :PCT/CN2011/000852
Filing Date :16/05/2011
(87) International Publication No :WO 2011/143933
(61) Patent of Addition to Application Number :NA
Filing Date :NA
(62) Divisional to Application Number :NA
Filing Date :NA

(71)**Name of Applicant :**
1)INSTITUTE OF GENETICS AND DEVELOPMENTAL BIOLOGY CHINESE ACADEMY OF SCIENCES
Address of Applicant :No. 1 West Beichen Road Chaoyang District Beijing 100101 China
(72)**Name of Inventor :**
1)CHU Chengcai
2)LI Chunlai

(57) Abstract :
Isolated polynucleotides polypeptides and recombinant DNA constructs of UDP glucose 4 epimerase useful for improving the agronomic performance including yield and drought tolerance are disclosed. Transgenic plants having these recombinant DNA constructs and methods utilizing these recombinant DNA constructs are also disclosed.

No. of Pages : 98 No. of Claims : 25

(12) PATENT APPLICATION PUBLICATION
(19) INDIA
(22) Date of filing of Application :19/11/2012
(21) Application No.10025/DELNP/2012 A
(43) Publication Date : 07/11/2014

(54) Title of the invention : PESTICIDAL MIXTURES COMPRISING ISOXAZOLINE DERIVATIVES

(51) International classification	:A01P7/04,A01N43/80,A01N43/90
(31) Priority Document No	:10165346.7
(32) Priority Date	:09/06/2010
(33) Name of priority country	:EPO
(86) International Application No	:PCT/EP2011/059586
Filing Date	:09/06/2011
(87) International Publication No	:WO 2011/154494
(61) Patent of Addition to Application Number	:NA
Filing Date	:NA
(62) Divisional to Application Number	:NA
Filing Date	:NA

(71)**Name of Applicant :**
1)SYNGENTA PARTICIPATIONS AG
Address of Applicant :Schwarzwaldallee 215 CH 4058 Basel Switzerland
(72)**Name of Inventor :**
1)DUTTON Ana Cristina
2)CASSAYRE Jr´me Yves
3)HAAS Ulrich Johannes

(57) Abstract :
The present invention provides pesticidal mixtures comprising a component A, a component B and a component C, wherein component A is a compound of formula (I) wherein one of Y 1 and Y2 is S, SO or SO2 and the other is CH2; L is a direct bond or methylene; A1 and A2 are C-H, or one of A1 and A2 is C-H and the other is N; R1 is hydrogen or methyl; R2 is chlorodiflu- = oromethyl or trifluoromethyl; R3 is 3,5-dibromo-phenyl, 3,5-dichloro-phenyl, 3,4-dichloro-phenyl, or 3,4,5-trichloro-phenyl; R4 is methyl; R5 is hydrogen; or R4 and R5 together form a bridging 1,3 -butadiene group; component B is a compound selected from Sedaxane, Fludioxonil, Metalaxyl, Mefenoxam, Cyprodinil, Azoxystrobin, Tebuconazole, Difenoconazole, Thiabendazole, Fluopyram, Penflufen, N-[9-(dichloromethylene)- 1,2,3,4-tetrahydro-l ,4-methanonaphthalen-5-yl]-3-(difluoromethyl)- 1-methyl-1Hpyrazole- 4-carboxamide and Fuxapyroxad; or component B is a compound selected from Tefluthrin, Lambda-cyhalothrin, Abamectin, Spinosad, Spinetoram, Chlorpyrifos, Thiodicarb, Chlorantraniliprole, Cyantraniliprole, Bacillus firmus, Bacillus subtilis, Pasteuria spp. such as P. penetrans and P. nishizawae, Imidacloprid, Thiacloprid, Acetamiprid, Nitenpyram, Dinotefuran, Thiamethoxam, Clothianidin, Nithiazine, Flonicamid, Fipronil, Pyrifluquinazone, Pymetrozine, Sulfoxaflor and Spirotetramat; and component C is a compound selected from an insecticide, a fungicide and a nematicide, which insecticide is selected from neonicotinoids, carbamates, diamides, spinosyns, phenylpyrazoles, pyrethroids, Pyrifluquinazone, Pymetrozine, Sulfoxaflor and Spirotetramat; which fungicide is selected from Azoxystrobin, Trifloxystrobin, Fluoxastrobin, Cyproconazole, Difenoconazole, -. Prothioconazole, Tebuconazole, Triticonazole, Fludioxonil, Thiabendazole, Ipconazole, Cyprodinil, Myclobutanil, Metalaxyl, Mefenoxam, Sedaxane, N-[9-(dichloromethylene)- 1,2,3,4-tetrahydro- 1,4-methanonaphthalen-5-yl]-3-(difluoromethyl)- 1- methyl-lH-pyrazole-4-carboxamide, Fluopyram, Penflufen, Fuxapyroxad, Fluopyram, and Penthiopyrad; which nematicide is selected from Abamectin, carbamate nematicides organophosphorous nematicides, Captan, Thiophanate-methyl, Thiabendazole, a compound of formula (X), wherein n is 0, 1 or 2 and the thiazole ring may be optionally substituted, Bacillus spp., Streptomyces spp. and Pasteuria spp.; Pochonia spp., Metarhizium spp.; wherein components B and C are different. The invention also provides methods of using the mixtures in the field of agriculture.

No. of Pages : 98 No. of Claims : 25

(12) PATENT APPLICATION PUBLICATION
(19) INDIA
(22) Date of filing of Application :19/11/2012
(21) Application No.10026/DELNP/2012 A
(43) Publication Date : 07/11/2014

(54) Title of the invention : SOLID ELECTROLYTE SECONDARY BATTERY

(51) International classification :H01M10/39
(31) Priority Document No :2010124560
(32) Priority Date :31/05/2010
(33) Name of priority country :Japan
(86) International Application No :PCT/JP2011/003022
Filing Date :31/05/2011
(87) International Publication No :WO 2011/152028
(61) Patent of Addition to Application Number :NA
Filing Date :NA
(62) Divisional to Application Number :NA
Filing Date :NA

(71)**Name of Applicant :**
1)OHKAWA Hiroshi
Address of Applicant :13 8 Minamigaoka 3 chome Nisshin shi Aichi 4700114 Japan
(72)**Name of Inventor :**
1)OHKAWA Hiroshi

(57) Abstract :
Provided is a solid electrolyte secondary battery with a greater capacity than previous solid electrolyte secondary batteries. Furthermore the disclosed solid electrolyte secondary battery can obtain a high power output and improve battery function while ensuring a large capacity. The solid electrolyte secondary battery is provided with a cathode chamber (18) a cathode active material container (30) that is provided independently and stores some cathode active material and a channel medium (100) that is provided between the two and through which the active material passes. The cathode active material is transferred by the channel medium and heterogeneity when the active material is discharged can be curbed. By providing a transfer medium (120) which transfers the cathode active material the cathode active material can be forcibly transferred.

No. of Pages : 40 No. of Claims : 15

(12) PATENT APPLICATION PUBLICATION
(19) INDIA
(22) Date of filing of Application :05/03/2012
(21) Application No.635/DEL/2012 A
(43) Publication Date : 07/11/2014

(54) Title of the invention : APPARATUS & PROCESS FOR EXTRACTION OF BIOPESTICEDES FROM CASSAVA BIO-WASTES

(51) International classification :C12N
(31) Priority Document No :NA
(32) Priority Date :NA
(33) Name of priority country :NA
(86) International Application No :NA
Filing Date :NA
(87) International Publication No :NA
(61) Patent of Addition to Application Number :NA
Filing Date :NA
(62) Divisional to Application Number :NA
Filing Date :NA

(71)**Name of Applicant :**
1)INDIAN COUNCIL OF AGRICULTURAL RESEARCH
Address of Applicant :KRISHI BHAWAN, DR. RAJENDRA PRASAD ROAD, NEW DELHI 110114, INDIA
2)KERALA STATE COUNCIL FOR SCIENCE, TECHNOLOGY AND ENVIRONMENT
(72)**Name of Inventor :**
1)JAYAPRAKAS CHERUVANDASSERI AURMARAN
2)SALIMON CHIRAMATTEL SUKUMARAN
3)SREERAG RAVIKUMAR SREEKALA
4)SAJEEV MOOTHANDSSSERY SANKARAKUTTY
5)LEENA SUDHAMMA

(57) Abstract :
An apparatus for extracting bio-pesticides from cassava bio-wastes comprising: a motorized high speed mixer-cum-grinder (10) of predefined volume adapted to receive, mix and grind cassava bio-wastes and hot water into slurry, a jacketed processing vessel (12) of predefined volume comprising: a) means for receiving the slurry from the mixer-cum grinder (10); b) heating means (14) adapted to heat the slurry under controlled conditions for generating vapours of bio-pesticidal extracts present in the slurry; c) condensing means (16) for condensing said vapours to obtain a condensate of bio-pesticide; and d) a valve (30) for discharging the slurry, a sediment and water separator-cum-storage chamber (18) of predefine volume comprising: a) filter means (20) adapted to receive and separate the residual bio-wastes and hot water; and b) a drain (32) for draining hot water for recycling back to the mixer-cum-grinder (10) and a bio-pesticide collecting tank (34) connected to the condensing means (16). The invention also relates to the process of extracting the bio-pesticide from cassava bio-wastes using the apparatus disclosed herein.

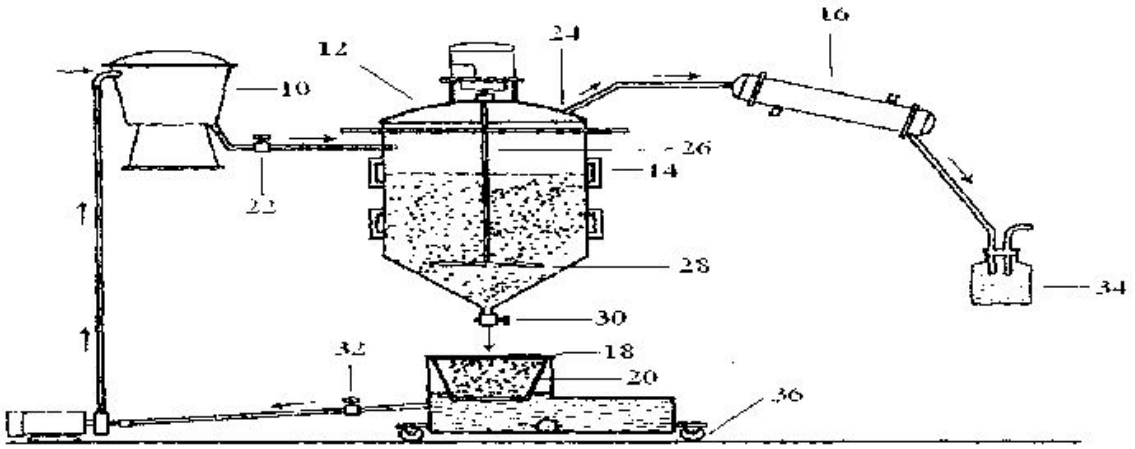

FIG. 1

No. of Pages : 29 No. of Claims : 7

(12) PATENT APPLICATION PUBLICATION
(19) INDIA
(22) Date of filing of Application :14/11/2012
(21) Application No.9864/DELNP/2012 A
(43) Publication Date : 07/11/2014

(54) Title of the invention : PRE-TREATMENT COMPOSITION

(51) International classification :C07C
(31) Priority Document No :NA
(32) Priority Date :NA
(33) Name of priority country :NA
(86) International Application No :PCT/US2010/038562
Filing Date :14/06/2010
(87) International Publication No : NA
(61) Patent of Addition to Application Number :NA
Filing Date :NA
(62) Divisional to Application Number :NA
Filing Date :NA

(71)**Name of Applicant :**
1)HEWLETT-PACKARD DEVELOPMENT COMPANY L.P.
Address of Applicant :11445 Compaq Center Drive W. Houston Texas 77070 U.S.A.
(72)**Name of Inventor :**
1)SARKISIAN George
2)VISNYAK Elizabeth Ann
3)EMAMJOMEH Ali

(57) Abstract :
Pre-treatment composition and printing method using such pre-treatment composition are disclosed. A disclosed example of the pre-treatment composition includes a liquid vehicle a polyvalent metal salt as fixing agent and a latex resin having an acid number of less than 20.

No. of Pages : 29 No. of Claims : 15

(12) PATENT APPLICATION PUBLICATION
(19) INDIA
(22) Date of filing of Application :16/11/2012
(21) Application No.10049/DELNP/2012 A
(43) Publication Date : 07/11/2014

(54) Title of the invention : HEAT TRANSFER COMPOSITIONS

(51) International classification :C07C
(31) Priority Document No :1008438.2
(32) Priority Date :20/05/2010
(33) Name of priority country :U.K.
(86) International Application No :PCT/GB2010/002231
Filing Date :06/12/2010
(87) International Publication No : NA
(61) Patent of Addition to Application Number :NA
Filing Date :NA
(62) Divisional to Application Number :NA
Filing Date :NA

(71)**Name of Applicant :**
1)MEXICHEM AMANCO HOLDING S.A. DE C.V.
Address of Applicant :Rio san Javier No. 10 Fraccionamiento Viveros del Rio Tlalnepantla Estado de Mexico C.P. 54060 Mexico
(72)**Name of Inventor :**
1)LOW Robert Elliott

(57) Abstract :
The invention provides a heat transfer composition comprising trans-1 3 3 3-tetrafluoropropene (R-1234ze(E)) carbon dioxide (R-744) and a third component selected from difluoromethane (R-32) 1 1-difluoroethane (R-152a) fluoroethane (R-161) 1 1 1 2-tetrafluoroethane (R-134a) propylene propane and mixtures thereof.

No. of Pages : 68 No. of Claims : 67

(12) PATENT APPLICATION PUBLICATION
(19) INDIA
(22) Date of filing of Application :15/11/2012
(21) Application No.9890/DELNP/2012 A
(43) Publication Date : 07/11/2014

(54) Title of the invention : COLLIMATOR BONDING STRUCTURE AND METHOD

(51) International classification :B29C65/48
(31) Priority Document No :12/764,862
(32) Priority Date :21/04/2010
(33) Name of priority country :U.S.A.
(86) International Application No :PCT/US2011/033496
Filing Date :21/04/2011
(87) International Publication No : NA
(61) Patent of Addition to Application Number :NA
Filing Date :NA
(62) Divisional to Application Number :NA
Filing Date :NA

(71)**Name of Applicant :**
1)INTEVAC INC.
Address of Applicant :3560 Bassett Street Santa Clara CA 95054 U.S.A.
(72)**Name of Inventor :**
1)KENNETH A. COSTELLO
2)KEVIN J. RODERICK
3)EDWARD YIN
4)DOUGLAS FOWLER

(57) Abstract :
An image sensor comprising: a solid state semiconductor imager comprising a backside thinned pixel array sensor and having a passivated silicon surface wherein a portion of the passivated silicon surface includes a pixel array region; a silicon collimator; and characterized in that: a metal bond inside the pixel may region joining the passivated silicon surface of the solid state semiconductor imager to the silicon collimator, the metal bond comprising a plurality of metalized catch pads provided on the surface of the solid state semiconductor imager, and the catch pads are interspersed throughout the imaging array. 2. The image sensor as claimed in claim 1, wherein the catch pads comprise thermocompressioned metallized catch pads and the metal bond comprises metal layer deposited on the silicon walls of the collimator.

No. of Pages : 32 No. of Claims : 22

(12) PATENT APPLICATION PUBLICATION
(19) INDIA
(22) Date of filing of Application :15/11/2012
(21) Application No.9892/DELNP/2012 A
(43) Publication Date : 07/11/2014

(54) Title of the invention : METHOD AND KIT FOR IDENTIFYING COMPOUNDS CAPABLE OF INHIBITING HUMAN PAPILLOMA VIRUS REPLICATION

(51) International classification :C12Q1/68,C12Q1/70
(31) Priority Document No :NA
(32) Priority Date :NA
(33) Name of priority country :NA
(86) International Application No :PCT/EE2010/000010
Filing Date :19/05/2010
(87) International Publication No :WO 2011/144216
(61) Patent of Addition to Application Number :NA
Filing Date :NA
(62) Divisional to Application Number :NA
Filing Date :NA

(71)**Name of Applicant :**
1)ICOSAGEN CELL FACTORY O
Address of Applicant :Nooruse 9 EE 50411 Tartu Estonia
(72)**Name of Inventor :**
1)USTAV Mart
2)USTAV Ene
3)GEIMANEN Jelizaveta
4)PIPITÅ Regina
5)ISOK PAAS Helen
6)REINSON Tormi
7)USTAV Mart Jr.
8)LAOS Triin
9)ORAV Marit
10)SALK Kristiina
11)M„NNIK Andres
12)REMM Anu

(57) Abstract :
The invention provides a method and a kit for identifying compounds capable of inhibiting Human Papilloma Virus (HPV) replication. HPV genomic or subgenomic DNA is inserted into a cell line wherein HPV DNA replication is supported and further the influence of a compound on the replication of HPV DNA is determined. The U2OS cell line was identified as a feasible host cell line to support HPV DNA replication and U2OS cells were identified as a suitable host for the propagation of genomes of mucosal and cutaneous tissue specific HPVs and for the HPV genome related constructs. The method enables screening for factors inhibiting the replication of HPV DNA at different replication phases of HPV life cycle. The method can be used in pharmacological research and screening for new potential drug candidates for prevention or therapy of infections caused by various subtypes of HPV.

No. of Pages : 38 No. of Claims : 15

(12) PATENT APPLICATION PUBLICATION
(19) INDIA
(22) Date of filing of Application :15/11/2012
(21) Application No.9899/DELNP/2012 A
(43) Publication Date : 07/11/2014

(54) Title of the invention : PROCESSES FOR PRODUCING DIAMINOBUTANE (DAB) SUCCINIC DINITRILE (SDN) AND SUCCINAMIDE (DAM)

(51) International classification :C07C
(31) Priority Document No :61/346,145
(32) Priority Date :19/05/2010
(33) Name of priority country :U.S.A.
(86) International Application No :PCT/US2011/036913
Filing Date :18/05/2011
(87) International Publication No : NA
(61) Patent of Addition to Application Number :NA
Filing Date :NA
(62) Divisional to Application Number :NA
Filing Date :NA

(71)**Name of Applicant :**
1)BIOAMBER S.A.S.
Address of Applicant :Route de Pomacle F-51110 Bazancourt France
(72)**Name of Inventor :**
1)FRUCHEY Olan S.
2)MANZER Leo E.
3)DUNUWILA Dilum
4)KEEN Brian T.
5)ALBIN Brooke A.
6)CLINTON Nye A.
7)DOMBEK Bernard D.

(57) Abstract :
Processes that make nitrogen-containing compounds include converting succinic acid (SA) or monoammonium succinate (MAS) derived from a diammonium succinate (DAS)- or MAS-containing fermentation broth to produce such compounds including diaminobutane (DAB) succinic dinitrile (SDN) succinic amino nitrile (SAN) succinamide (DAM) and related polymers.

No. of Pages : 35 No. of Claims : 19

(12) PATENT APPLICATION PUBLICATION
(19) INDIA
(22) Date of filing of Application :15/11/2012
(21) Application No.9900/DELNP/2012 A
(43) Publication Date : 07/11/2014

(54) Title of the invention : INNOVATIVE DISCOVERY OF THERAPEUTIC DIAGNOSTIC AND ANTIBODY COMPOSITIONS RELATED TO PROTEIN FRAGMENTS OF ISOLEUCYL TRNA SYNTHETASES

(51) International classification :C12P
(31) Priority Document No :61/328,570
(32) Priority Date :27/04/2010
(33) Name of priority country :U.S.A.
(86) International Application No :PCT/US2011/034205
Filing Date :27/04/2011
(87) International Publication No : NA
(61) Patent of Addition to Application Number :NA
Filing Date :NA
(62) Divisional to Application Number :NA
Filing Date :NA

(71)**Name of Applicant :**
1)ATYR PHARMA INC.
Address of Applicant :3545 John Hopkins Court Suite #250 San Diego California 92121 U.S.A.
2)PANGU BIOPHARMA LIMITED
(72)**Name of Inventor :**
1)GREENE Leslie Ann
2)CHIANG Kyle P.
3)HONG Fei
4)VASSEROT Alain P.
5)LO Wing-Sze
6)WATKINS Jeffry D.
7)MENDLEIN John D.
8)QUINN Cheryl L.

(57) Abstract :
Provided are compositions comprising newly identified protein fragments of aminoacyl-tRNA synthetases polynucleotides that encode them and complements thereof related agents and methods of use thereof in diagnostic drug discovery research and therapeutic applications.

No. of Pages : 233 No. of Claims : 125

(12) PATENT APPLICATION PUBLICATION
(19) INDIA
(22) Date of filing of Application :12/03/2012
(21) Application No.700/DEL/2012 A
(43) Publication Date : 07/11/2014

(54) Title of the invention : FORMULATION & EVALUATION OF MOUTH DISSOLVING TABLET OF CHLORPHENIRAMINEMALEATE

(51) International classification :A61K
(31) Priority Document No :NA
(32) Priority Date :NA
(33) Name of priority country :NA
(86) International Application No :NA
Filing Date :NA
(87) International Publication No :NA
(61) Patent of Addition to Application Number :NA
Filing Date :NA
(62) Divisional to Application Number :NA
Filing Date :NA

(71)**Name of Applicant :**
1)PROF. K. K. JHA
Address of Applicant :C-1056, DDA FLATS, EAST OF LONI ROAD, DELHI-110093. India
2)ANUJ MITTAL
3)KULDEEP SINGH, TMU
(72)**Name of Inventor :**
1)PROF. K.K. JHA
2)ANUJ MITTAL
3)KULDEEP SINGH, TMU

(57) Abstract :
The objective of present work was to develop mouth dissolving tablets of Chlorpheniramine maleate in order to attain the instantaneous pregastric release of the drug in upper gastrointestinal tract which resulted enhanced bioavailability of the drug bypassing the first pass metabolism.

No. of Pages : 17 No. of Claims : 7

(12) PATENT APPLICATION PUBLICATION
(19) INDIA
(22) Date of filing of Application :15/11/2012
(21) Application No.9908/DELNP/2012 A
(43) Publication Date : 07/11/2014

(54) Title of the invention : WOUND DRESSING

(51) International classification :A61F 13/00
(31) Priority Document No :10 2010 020 050.6
(32) Priority Date :11/05/2010
(33) Name of priority country :Germany
(86) International Application No :PCT/EP2011/057491
Filing Date :10/05/2011
(87) International Publication No : NA
(61) Patent of Addition to Application Number :NA
Filing Date :NA
(62) Divisional to Application Number :NA
Filing Date :NA

(71)**Name of Applicant :**
1)IVF HARTMANN AG
Address of Applicant :Victor von Bruns-Strasse 8212 Neuhausen am Rheinfall Switzerland
(72)**Name of Inventor :**
1)KNILL Esther
2)BRUGGISSER Regina

(57) Abstract :
THE INVENTION RELATES TO A WOUND DRESSING (2) FOR TREATING WOUNDS IN A MOIST OR WET ENVIRONMENT COMPRISING A FIBROUS NONWOVEN FABRIC-BASED SUCTION/RINSING BODY (4) IN WHICH SUPER-ABSORBENT MATERIAL IS DISTRIBUTED WHEREIN THE SUCTION/RINSING BODY (4) IS SUPPLIED BY THE MANUFACTURER WITH A SALINE AQUEOUS SOLUTION IN PARTICULAR A RINGER™S SOLUTION PREFERABLY TO THE POINT OF SATURATION AND FURTHER COMPRISING A COVERING (6) FORMING THE OUTER VISIBLE SIDES OF THE WOUND DRESSING WHEREIN AN EVAPORATION-INHIBITING FILM LAYER CAN BE PROVIDED ON THE SIDE OF THE SUCTION/RINSING BODY (4) WHICH FACES AWAY FROM THE WOUND. THE WOUND DRESSING IS IMPROVED IN THAT THE AQUEOUS SOLUTION COMPRISES AN ANTIMICROBIALLY ACTING SUBSTANCE THAT IS CATIONIC AT PH VALUES OF 4-7.5 OF A TYPICAL MOIST OR WET WOUND ENVIRONMENT. SAID SUBSTANCE IS ATTRACTED BY NEGATIVE GROUPS OF THE ANIONIC SUPER-ABSORBENT MATERIAL AND THEREBY ACTS ANTIMICROBIALLY INSIDE THE SUCTION/RINSING BODY (4)...

No. of Pages : 23 No. of Claims : 16

(12) PATENT APPLICATION PUBLICATION
(19) INDIA
(22) Date of filing of Application :19/11/2012
(21) Application No.10016/DELNP/2012 A
(43) Publication Date : 07/11/2014

(54) Title of the invention : ANTIBODY BEING CAPABLE OF BINDING TO TRANSFORMING GROWTH FACTOR ALPHA AND HAVING GROWTH-SUPPRESSING ACTIVITY ON CANCERS HAVING Ras GENE MUTATION

(51) International classification :C12N
(31) Priority Document No :2010-114460
(32) Priority Date :18/05/2010
(33) Name of priority country :Japan
(86) International Application No :PCT/JP2011/061347
Filing Date :17/05/2011
(87) International Publication No : NA
(61) Patent of Addition to Application Number :NA
Filing Date :NA
(62) Divisional to Application Number :NA
Filing Date :NA

(71)**Name of Applicant :**
1)MEDICAL & BIOLOGICAL LABORATORIES CO. LTD.
Address of Applicant :5-3 Sakae 4-chome Naka-ku Nagoya-shi Aichi 460-0008 Japan
(72)**Name of Inventor :**
1)KANEDA Makoto
2)FUJII Yoshihiro
3)HAYATA Yoshihiro
4)KISHI Yoshiro
5)YAHARA Ichiro

(57) Abstract :
It has been found out that among antibodies showing reactivity with wild type TGF-Î± antibodies less reactive with G79A-substituted TGF-Î± have an excellent growth-suppressing effect on cancer cells having a mutated Ras gene. Further it has been found out that most of these antibodies have an activity of inhibiting EGFR tyrosine phosphorylation and/or an induction-suppressing activity on vascular endothelial cells.

No. of Pages : 202 No. of Claims : 19

(12) PATENT APPLICATION PUBLICATION
(19) INDIA
(22) Date of filing of Application :09/04/2012
(21) Application No.1069/DEL/2012 A
(43) Publication Date : 07/11/2014

(54) Title of the invention : AN IMPROVED SINGLE DOOR DIRECT COOLED DOMESTIC REFRIGERATOR WITH ADJUSTABLE FREEZER COMPARTMENT

(51) International classification :F25D11/02
(31) Priority Document No :NA
(32) Priority Date :NA
(33) Name of priority country :NA
(86) International Application No :NA
Filing Date :NA
(87) International Publication No :NA
(61) Patent of Addition to Application Number :NA
Filing Date :NA
(62) Divisional to Application Number :NA
Filing Date :NA

(71)**Name of Applicant :**
1)LG ELECTRONICS INDIA PVT. LIMITED,
Address of Applicant :A-27, MOHAN COOPERATIVE INDUSTRIAL ESTATE, NEW DELHI, INDIA
(72)**Name of Inventor :**
1)NAVEEN KUMAR JAIN
2)BRIJESH KUMAR SHARMA
3)RAKESH KUMAR JHA

(57) Abstract :
This invention relates to an improved single door direct cooled domestic refrigerator with adjustable freezer compartment. The freezer can be adjusted to have bigger/smaller storage capacity according to need. The adjustment in the freezer compartment size is accommodated with adjustment in size of the fresh food compartment. Therefore, as per the setting where freezer compartment is smaller the fresh food compartment is bigger and for the other setting, a bigger sized freezer compartment with smaller sized fresh food compartment.

No. of Pages : 19 No. of Claims : 11

(12) PATENT APPLICATION PUBLICATION
(19) INDIA
(22) Date of filing of Application :16/11/2012
(21) Application No.9947/DELNP/2012 A
(43) Publication Date : 07/11/2014

(54) Title of the invention : WIPER BLADE FOR A WINDSHIELD WIPER

(51) International classification :B60S1/38
(31) Priority Document No :102010029107.2
(32) Priority Date :19/05/2010
(33) Name of priority country :Germany
(86) International Application No :PCT/EP2011/056089
Filing Date :18/04/2011
(87) International Publication No :WO 2011/144400
(61) Patent of Addition to Application Number :NA
Filing Date :NA
(62) Divisional to Application Number :NA
Filing Date :NA

(71)**Name of Applicant :**
1)ROBERT BOSCH GMBH
Address of Applicant :Postfach 30 02 20 70442 Stuttgart Germany
(72)**Name of Inventor :**
1)CAMPS Johan
2)VAN HOYE Jan
3)HUEHSAM Andreas
4)WEIDLICH Jochen

(57) Abstract :
In a wiper blade for a windshield wiper, having a wiper strip which has at least one bearing rail (212), onto which a basic connecting device (116) fonned of plastic is integrally molded and is fixed to an adapter unit for attaching the wiper strip to a wiper arm, the at least one bearing rail (212) has a spring element (313) provided with a plastic sheath (213), wherein a fused connection (512, 514) is fonned between the basic connecting device (160) and the plastic sheath (213), at least in some sections.

No. of Pages : 17 No. of Claims : 10

(12) PATENT APPLICATION PUBLICATION
(19) INDIA
(22) Date of filing of Application :16/11/2012
(21) Application No.9949/DELNP/2012 A
(43) Publication Date : 07/11/2014

(54) Title of the invention : INFLIGHT CATERING APPARATUS

(51) International classification	:H02K35/02,H02K21/14,E01C5/00
(31) Priority Document No	:934/DEL/2010
(32) Priority Date	:19/04/2010
(33) Name of priority country	:India
(86) International Application No	:PCT/IN2011/000261
Filing Date	:19/04/2011
(87) International Publication No	:WO 2011/132203
(61) Patent of Addition to Application Number	:NA
Filing Date	:NA
(62) Divisional to Application Number	:NA
Filing Date	:NA

(71)**Name of Applicant :**
1)P.A. MOHAMMED ANSAR
Address of Applicant :c/o Mehboob A Quarter No. 11 First Floor Police Line Vikas Puri New Delhi 110 018 India
(72)**Name of Inventor :**
1)P.A. MOHAMMED ANSAR

(57) Abstract :
A transducer (100) for converting pressure exerted by a footfall into electrical current comprises: a lid portion (102) shaped to receive a footfall pressure on the outer side an axle (104) coupled with the lid portion (102) for moving in a downward direction due to the footfall pressure the axle (104) being coupled at the center of the inner side of the lid portion (102); a magnet (112) coupled with the axel (104) the magnet (112) comprising a threaded pivot (114) placed through the center of the magnet (112) the downward motion of the axle (104) causing the magnet (112) to spin about the threaded pivot (114); and a coil of wire (116) wound around the magnet (112) the electrical current being induced in the coil of wire (116) by the spinning motion of the magnet (112).

No. of Pages : 11 No. of Claims : 12

(12) PATENT APPLICATION PUBLICATION
(19) INDIA
(22) Date of filing of Application :16/11/2012
(21) Application No.9952/DELNP/2012 A
(43) Publication Date : 07/11/2014

(54) Title of the invention : METHOD AND DEVICE FOR THE HYDROLYSIS OF PREFERABLY SOLID ORGANIC SUBSTRATES

(51) International classification :C12M1/00,B65G33/00,D21B1/36
(31) Priority Document No :A 853/2010
(32) Priority Date :25/05/2010
(33) Name of priority country :Austria
(86) International Application No :PCT/EP2011/053864
Filing Date :15/03/2011
(87) International Publication No :WO 2011/147601
(61) Patent of Addition to Application Number :NA
Filing Date :NA
(62) Divisional to Application Number :NA
Filing Date :NA

(71)**Name of Applicant :**
1)BIOGAS SYSTEMS GMBH
Address of Applicant :Am Futterplatz 3106 A 7111 Parndorf Austria
(72)**Name of Inventor :**
1)DAUSER Hermann

(57) Abstract :
The invention relates to a device for the hydrolysis of preferably solid organic substrates in particular of energy crops and plant residues with a collection vessel (1) for receiving the organic substrates with a conveying means (4) for transporting the organic substrates into a charging device (7) for the batch wise charging of a hydrolyzer (10) with the organic substrates the hydrolyzer (10) being provided on the output with a pressure release device (12) having a valve controlled pressure diaphragm (13) and a steam trap (14) arranged upstream of an expander tank (15). According to the invention the conveying means (4) includes a conveyor worm (4) with a sleeve shaft (25) which is charged with hot steam from the steam trap (14) which is preferably designed as a cyclone the sleeve shaft (25) in the conveying zone for the organic substrate having in a heating zone (18) steam outlet openings (26) for directly charging the organic substrate with hot steam.

No. of Pages : 19 No. of Claims : 15

(12) PATENT APPLICATION PUBLICATION
(19) INDIA
(22) Date of filing of Application :15/11/2012
(21) Application No.9955/DELNP/2012 A
(43) Publication Date : 07/11/2014

(54) Title of the invention : ANTI-HUMAN RESPIRATORY SYNCYTIAL VIRUS (RSV) ANTIBODIES AND METHODS OF USE

(51) International classification :C12P
(31) Priority Document No :61/399,310
(32) Priority Date :09/07/2010
(33) Name of priority country :U.S.A.
(86) International Application No :PCT/US2011/043463
Filing Date :08/07/2011
(87) International Publication No : NA
(61) Patent of Addition to Application Number :NA
Filing Date :NA
(62) Divisional to Application Number :NA
Filing Date :NA

(71)**Name of Applicant :**
1)CRUCELL HOLLAND B.V.
Address of Applicant :Archimedesweg 4 NL-2333 CN Leiden Netherlands
(72)**Name of Inventor :**
1)WILLIAMSON Robert Anthony
2)WADIA Jehangir
3)PASCUAL Gabriel
4)KEOGH Elissa

(57) Abstract :
Provided herein are antibodies or antigen-binding fragments thereof that immunospecifically bind to the fusion (F) protein of Respiratory Syncytial Virus (RSV). Also provided are methods for of prevention treatment and diagnosis of viral infection and/or the treatment of one more symptoms of RSV-mediated disease. Methods of generating antibodies that immunospecifically bind RSV F protein also are provided.

No. of Pages : 291 No. of Claims : 99

(12) PATENT APPLICATION PUBLICATION
(19) INDIA
(22) Date of filing of Application :16/11/2012
(21) Application No.9956/DELNP/2012 A
(43) Publication Date : 07/11/2014

(54) Title of the invention : PROCESSES FOR PRODUCING ADIPIC ACID FROM FERMENTATION BROTHS CONTAINING DIAMMONIUM ADIPATE

(51) International classification :C07C
(31) Priority Document No :61/329,800
(32) Priority Date :30/04/2010
(33) Name of priority country :U.S.A.
(86) International Application No :PCT/US2011/032617
Filing Date :15/04/2011
(87) International Publication No : NA
(61) Patent of Addition to Application Number :NA
Filing Date :NA
(62) Divisional to Application Number :NA
Filing Date :NA

(71)**Name of Applicant :**
1)BIO AMBER INC.,
Address of Applicant :3850 ANNAPOLIS LANE NORTH, PLYWOUTH, MN 55447, U.S.A.
(72)**Name of Inventor :**
1)FRUCHEY Olan S.
2)MANZER Leo E.
3)DUNUWILA Dilum
4)KEEN Brian T.
5)ALBIN Brooke A.
6)CLINTON Nye A.
7)DOMBEK Bernard D.

(57) Abstract :
Processes for making AA from either a clarified DAA-containing fermentation broth or a clarified MAA-containing fermentation broth that include distilling the broth under super atmospheric pressure at a temperature of >100°C to about 300°C to form an overhead that comprises water and ammonia and a liquid bottoms that includes AA and at least about 20 wt%- water; cooling the bottoms to a temperature sufficient to cause the bottoms to separate into -a liquid portion and a solid portion that is substantially.pure AA; and separating the solid portion from the liquid portion. A method also reduces the broth distillation temperature and pressure by adding an ammonia separating and/or water azeotroping solvent to the broth.

No. of Pages : 24 No. of Claims : 24

(12) PATENT APPLICATION PUBLICATION
(19) INDIA
(22) Date of filing of Application :09/11/2012
(21) Application No.9759/DELNP/2012 A
(43) Publication Date : 07/11/2014

(54) Title of the invention : 3 3 DISUBSTITUTED (8 AZA BICYCLO [3.2.1] OCT 8 YL) [5 (1H PYRAZOL 4 YL) THIOPHEN 3 YL] METHANONES AS INHIBITORS OF 11 (BETA) HSD1

(51) International classification :C07D409/14,C07D451/02,C07D451/04
(31) Priority Document No :61/329453
(32) Priority Date :29/04/2010
(33) Name of priority country :U.S.A.
(86) International Application No :PCT/GB2011/000345
Filing Date :10/03/2011
(87) International Publication No :WO 2011/135276
(61) Patent of Addition to Application Number :NA
Filing Date :NA
(62) Divisional to Application Number :NA
Filing Date :NA

(71)**Name of Applicant :**
1)THE UNIVERSITY OF EDINBURGH
Address of Applicant :Old College South Bridge Edinburgh EH8 9YL U.K.
(72)**Name of Inventor :**
1)WEBSTER Scott Peter
2)SECKL Jonathan Robert
3)WALKER Brian Robert
4)WARD Peter
5)PALLIN Thomas David
6)DYKE Hazel Joan
7)PERRIOR Trevor Robert

(57) Abstract :
The present invention pertains generally to the field of therapeutic compounds. More specifically the present in vention pertains to certain 3,3-disubstituted-(8-am- bicyclo [3.2. 1]oct-8-yl)[5-(lH-pyrazol-4-yl)-thiophen-3-yl]-methanone, 3,3- disubstituted- (6-aza-bicyclo[3. 1.1]hept-6-yl)-[5-(lH-pyrazol-4-yl)-thiophen-3-yl]-methanone, and 4, A-disubstituted piperidin-1 - yl)-[5-(lH-pyrazol-4-yl)-thiophen-3-yl]-methanone compounds of the following formula (I) that, inter alia, inhibit 11 b-hydroxysteroid dehydrogenase type 1 (11 b-HSDl) . The present invention also pertains to pharmaceutical compositions comprising such o compounds, and the use of such compounds and compositions, both in vitro and in vivo, to inhibit 11 b-hydroxysteroid dehydro genase type 1; to treat disorders that are ameliorated by the inhibition of 11 b-hydroxysteroid dehydrogenase type 1; to treat the o metabolic syndrome, which includes disorders such as type 2 diabetes and obesity, and associated disorders including insulin re sistance, hypertension, lipid disorders and cardiovascular disorders such as ischaemic (coronary) heart disease; to treat CNS disor ders such as mild cognitive impairment and early dementia, including Alzheimers disease; etc.

No. of Pages : 123 No. of Claims : 79

(12) PATENT APPLICATION PUBLICATION
(19) INDIA
(22) Date of filing of Application :12/03/2012
(21) Application No.699/DEL/2012 A
(43) Publication Date : 07/11/2014

(54) Title of the invention : DESIGN & EVALUATION OF FAST DISSOLVING TABLET OF LEVOCETRIZINE DIHYDROCHLORIDE

(51) International classification :A61K
(31) Priority Document No :NA
(32) Priority Date :NA
(33) Name of priority country :NA
(86) International Application No :NA
Filing Date :NA
(87) International Publication No :NA
(61) Patent of Addition to Application Number :NA
Filing Date :NA
(62) Divisional to Application Number :NA
Filing Date :NA

(71)**Name of Applicant :**
1)PROF. K. K. JHA
Address of Applicant :C-1056, DDA FLATS, EAST OF LONI ROAD, DELHI-110093. India
2)AKHIL SHARMA
3)HRIDESH KUMAR SHARMA, TMU
(72)**Name of Inventor :**
1)PROF. K.K. JHA
2)AKHIL SHARMA
3)HRIDESH KUMAR SHARMA, TMU

(57) Abstract :
The objective of present invention is to develop fast dissolving tablet formulation of Levocetirizine dihydrochloride in order to attain the instantaneous pregastric release of the drug in upper gastrointestinal tract which resulted enhanced bioavailability of drug by passing the first pass metabolism, with superdisintegrant addition method and sublimation technique comprising camphor, the subliming agent and bitter taste of drug is masked using indion-204 by solid dispersion technique. The superdisintegrants comprising crospovidone, croscarmellose sodium and sodium starch glycolate with other excipients such as lactose as diluent, aspartame as sweetening agent, talc as glidant and magnesium stearate as the lubricant.

No. of Pages : 22 No. of Claims : 10

(12) PATENT APPLICATION PUBLICATION
(19) INDIA
(22) Date of filing of Application :12/11/2012
(21) Application No.9780/DELNP/2012 A
(43) Publication Date : 07/11/2014

(54) Title of the invention : OPTICAL CURRENT TRANSFORMER FOR GAS-INSULATED APPARATUS

(51) International classification :H02J
(31) Priority Document No :2010-111243
(32) Priority Date :13/05/2010
(33) Name of priority country :Japan
(86) International Application No :PCT/JP2011/061470
Filing Date :12/05/2011
(87) International Publication No : NA
(61) Patent of Addition to Application Number :NA
Filing Date :NA
(62) Divisional to Application Number :NA
Filing Date :NA

(71)**Name of Applicant :**
1)Hitachi Ltd.
Address of Applicant :6-6 Marunouchi 1-chome Chiyoda-ku Tokyo 100-8280 Japan
(72)**Name of Inventor :**
1)ZHANG Wei
2)KAWAMATA Masashi
3)NAKAMICHI Hiroyuki
4)YAMAGUCHI Tatsushi
5)SHIOZAWA Daigorou

(57) Abstract :
Disclosed is an optical current transformer that is for a gas-insulated apparatus and wherein the task of disposing optical fibers is performed with a simple structure without emitting insulating gas from within a sealed vessel and the increase/decrease of optical fibers is easy. At least one conductor is disposed within the sealed vessel (10) which is filled with insulating gas an aperture (11) is provided to a portion of the sealed vessel (10) and is closed by a closing plate (12) and optical fibers (14) are disposed that form a closed loop surrounding the conductor (13) within the sealed vessel (10). The optical fibers (14) are led out of the sealed vessel (10) from the closing plate (12) in an airtight manner and are provided with at least a light-source unit and an optical signal processing unit at the lead-out end.....

No. of Pages : 16 No. of Claims : 7

(12) PATENT APPLICATION PUBLICATION
(19) INDIA
(22) Date of filing of Application :19/11/2012
(21) Application No.9976/DELNP/2012 A
(43) Publication Date : 07/11/2014

(54) Title of the invention : PROCESSES FOR THE PRODUCTIONS OF PYRROLIDONES

(51) International classification :C07C
(31) Priority Document No :61/346,135
(32) Priority Date :19/05/2010
(33) Name of priority country :U.S.A.
(86) International Application No :PCT/US2011/036919
Filing Date :18/05/2011
(87) International Publication No : NA
(61) Patent of Addition to Application Number :NA
Filing Date :NA
(62) Divisional to Application Number :NA
Filing Date :NA

(71)**Name of Applicant :**
1)BIOAMBER S.A.S.
Address of Applicant :Route De Pomacle F-51110 Bazancourt France
(72)**Name of Inventor :**
1)FRUCHEY Olan S.
2)MANZER Leo E.
3)DUNUWILA Dilum
4)KEEN Brian T.
5)ALBIN Brooke A.
6)CLINTON Nye A.
7)DOMBEK Bernard D.

(57) Abstract :
Processes for making pyrrolidones include making MAS and/or SA from a clarified DAS- and/or MAS-containing fermentation broth and converting the MAS or SA to the pyrrolidones typically with catalysts at selected temperatures and pressures.

No. of Pages : 42 No. of Claims : 7

(12) PATENT APPLICATION PUBLICATION
(19) INDIA
(22) Date of filing of Application :19/11/2012
(21) Application No.9986/DELNP/2012 A
(43) Publication Date : 07/11/2014

(54) Title of the invention : HOUSING FOR AN IMPELLER

(51) International classification :F02B37/18,F01D17/14,F16K1/20
(31) Priority Document No :10 2010 050 669.9
(32) Priority Date :09/11/2010
(33) Name of priority country :Germany
(86) International Application No :PCT/EP2011/005537
Filing Date :03/11/2011
(87) International Publication No :WO 2012/062428
(61) Patent of Addition to Application Number :NA
Filing Date :NA
(62) Divisional to Application Number :NA
Filing Date :NA

(71)**Name of Applicant :**
1)VOITH PATENT GMBH
Address of Applicant :St. Pltener Str. 43 89522 Heidenheim Germany
(72)**Name of Inventor :**
1)K–HLER Stefan

(57) Abstract :
The invention relates to a housing for a blade wheel of a turbo machine, comprising a flow channel which is enclosed by a housing wall; a valve flap by means of which a flow opening in the housing wall can be selectively sealed or released; 10 a shaft which is connected with the valve flap, with the shaft being guided through an opening in the housing wall to the outside of the flow channel. The invention is characterized in that the opening has an opening width which is 15 larger than the largest diameter of the smallest projected area of the valve flap and of the part of the shaft protruding into the flow channel in the mounted state, and that the opening is sealed in the mounted state by a cover through which the shaft extends.

No. of Pages : 15 No. of Claims : 10

(12) PATENT APPLICATION PUBLICATION
(19) INDIA
(22) Date of filing of Application :16/11/2012
(21) Application No.9963/DELNP/2012 A
(43) Publication Date : 07/11/2014

(54) Title of the invention : SUBSTANTIALLY CLEAR NUTRITIONAL LIQUIDS COMPRISING CALCIUM HMB AND SOLUBLE PROTEIN

(51) International classification :A23L
(31) Priority Document No :61/353,400
(32) Priority Date :10/06/2010
(33) Name of priority country :U.S.A.
(86) International Application No :PCT/US2011/039170
Filing Date :03/06/2011
(87) International Publication No : NA
(61) Patent of Addition to Application Number :NA
Filing Date :NA
(62) Divisional to Application Number :NA
Filing Date :NA

(71)**Name of Applicant :**
1)ABBOTT LABORATORIES
Address of Applicant :Dept. 377/AP6P-1 100 Abbott Park Road Abbott Park Illinois 60064 U.S.A.
2)DEWILLE Normanella T
(72)**Name of Inventor :**
1)JOHNS Paul W
2)MAZER Terrence B.
3)DEWILLE Normanella T
4)LOWE Kelley J

(57) Abstract :
Disclosed are substantially clear nutritional liquids comprising protein and calcium HMB wherein soluble protein represents from about 65% to 100% by weight of total protein. The liquids have a pH of from about 2.8 to about 4.6 and may be manufactured as a hot fill product. The substantially clear nutritional liquids may also have a weight ratio of calcium HMB to soluble calcium of from 4.5:1 to 7.3:1. In some embodiments the substantially clear nutritional liquids are substantially free of fat and may optionally include isomaltulose and/or beta alanine.

No. of Pages : 25 No. of Claims : 15

(12) PATENT APPLICATION PUBLICATION
(19) INDIA
(22) Date of filing of Application :19/11/2012
(21) Application No.9998/DELNP/2012 A
(43) Publication Date : 07/11/2014

(54) Title of the invention : DYNAMIC DOUBLE CIRCUIT IN LINE HEATER

(51) International classification :H02J
(31) Priority Document No :10163652.0
(32) Priority Date :21/05/2010
(33) Name of priority country :EPO
(86) International Application No :PCT/EP2011/058248
Filing Date :20/05/2011
(87) International Publication No :WO 2011/144733
(61) Patent of Addition to Application Number :NA
Filing Date :NA
(62) Divisional to Application Number :NA
Filing Date :NA

(71)**Name of Applicant :**
1)NESTEC S.A.
Address of Applicant :Av. Nestl 55 CH 1800 Vevey Switzerland
(72)**Name of Inventor :**
1)ETTER Stefan

(57) Abstract :
A dynamic double circuit in Line heater is disclosed as well as a machine containing the heater and a method of operating the machine.

No. of Pages : 22 No. of Claims : 11

(12) PATENT APPLICATION PUBLICATION
(19) INDIA
(22) Date of filing of Application :20/11/2012
(21) Application No.10080/DELNP/2012 A
(43) Publication Date : 07/11/2014

(54) Title of the invention : EDDY CURRENT MEASURING SENSOR

(51) International classification :G01N 27/72
(31) Priority Document No :2010-102751
(32) Priority Date :27/04/2010
(33) Name of priority country :Japan
(86) International Application No :PCT/JP2011/051067
Filing Date :21/01/2011
(87) International Publication No : NA
(61) Patent of Addition to Application Number :NA
Filing Date :NA
(62) Divisional to Application Number :NA
Filing Date :NA

(71)**Name of Applicant :**
1)TOYOTA JIDOSHA KABUSHIKI KAISHA
Address of Applicant :1 Toyota-cho Toyota-shi Aichi 471-8571 Japan
(72)**Name of Inventor :**
1)YAMAMOTO Takanari

(57) Abstract :
Disclosed is an eddy current measuring sensor comprising a probe which is configured as a regular triangle and is provided with an excitation unit for applying a given AC excitation signal to a workpiece and a detection unit for detecting a detection signal occurring in an object to be measured responsive to the applied AC excitation signal wherein the excitation unit is provided with exciting coils which are arranged on each side of the probe while the detection unit is provided with detection coils which are arranged at each vertex of the probe.

No. of Pages : 33 No. of Claims : 4

(12) PATENT APPLICATION PUBLICATION
(19) INDIA
(22) Date of filing of Application :20/11/2012
(21) Application No.10082/DELNP/2012 A
(43) Publication Date : 07/11/2014

(54) Title of the invention : METHOD AND APPARATUS FOR CACHE CONTROL

(51) International classification :G06F
(31) Priority Document No :12/777,657
(32) Priority Date :11/05/2010
(33) Name of priority country :U.S.A.
(86) International Application No :PCT/US2011/035975
Filing Date :10/05/2011
(87) International Publication No : NA
(61) Patent of Addition to Application Number :NA
Filing Date :NA
(62) Divisional to Application Number :NA
Filing Date :NA

(71)**Name of Applicant :**
1)ADVANCED MICRO DEVICES INC.
Address of Applicant :One AMD Place P.O. Box 3453 Sunnyvale California 94088 U.S.A.
(72)**Name of Inventor :**
1)BRANOVER Alexander
2)HACK Norman M.
3)STEINMAN Maurice B.
4)KALAMATIANOS John
5)OWEN Jonathan M.

(57) Abstract :
A method and apparatus for dynamically controlling a cache size is disclosed. In one embodiment a method includes changing an operating point of a processor from a first operating point to a second operating point and selectively removing power from one or more ways of a cache memory responsive to changing the operating point. The method further includes processing one or more instructions in the processor subsequent to removing power from the one or more ways of the cache memory wherein said processing includes accessing one or more ways of the cache memory from which power was not removed.

No. of Pages : 46 No. of Claims : 31

(12) PATENT APPLICATION PUBLICATION
(19) INDIA
(22) Date of filing of Application :21/11/2012
(21) Application No.10087/DELNP/2012 A
(43) Publication Date : 07/11/2014

(54) Title of the invention : DOWNLINK TRANSMISSION METHOD AND BASE STATION USED IN MULTIPLE INPUT MULTIPLE OUTPUT SYSTEM

(51) International classification :H01J
(31) Priority Document No :201010178244.0
(32) Priority Date :11/05/2010
(33) Name of priority country :China
(86) International Application No :PCT/CN2010/078300
Filing Date :01/11/2010
(87) International Publication No : NA
(61) Patent of Addition to Application Number :NA
Filing Date :NA
(62) Divisional to Application Number :NA
Filing Date :NA

(71)**Name of Applicant :**
1)ZTE CORPORATION
Address of Applicant :ZTE Plaza Keji Road South Hi-Tech Industrial Park Nanshan District Shenzhen Guangdong Province 518057 China
(72)**Name of Inventor :**
1)BIN LI
2)JINFENG YAN
3)CHENHONG LU

(57) Abstract :
The disclosure provides a downlink transmission method for a Multiple Input Multiple Output (MIMO) system, and a base station , wherein the method comprises: a base station selecting a. downlink MIMO mode in a downlink transmission mode in which a UE currently 5 is by using a Channel Quality Indicator (CQI), a Rank Indicator (RI) and a Preceding Matrix Indicator (PMI) which are reported by the UE within a time window; and the base station transmitting data to the UE by using the selected downlink MIMO mode. The disclosure achieves the effect of increasing the coverage and capacity of the LTE system to the maximum.

No. of Pages : 22 No. of Claims : 10

(12) PATENT APPLICATION PUBLICATION
(19) INDIA
(22) Date of filing of Application :13/01/2012
(21) Application No.127/DEL/2012 A
(43) Publication Date : 07/11/2014

(54) Title of the invention : SOLID LIPID NANOPARTICLES ENTRAPPING HYDROPHILIC/AMPHIPHILIC DRUG AND A PROCESS FOR PREPARING THE SAME

(51) International classification :A61K
(31) Priority Document No :NA
(32) Priority Date :NA
(33) Name of priority country :NA
(86) International Application No :NA
Filing Date :NA
(87) International Publication No :NA
(61) Patent of Addition to Application Number :NA
Filing Date :NA
(62) Divisional to Application Number :NA
Filing Date :NA

(71)**Name of Applicant :**
1)DEPARTMENT OF BIOTECHNOLOGY
Address of Applicant :BLOCK-2 (7TH FLOOR), CGO COMPLEX, LODI ROAD, NEW DELHI 110003, INDIA.
2)PANJAB UNIVERSITY
(72)**Name of Inventor :**
1)KAUR INDU PAL
2)BHANDARI ROHIT

(57) Abstract :
The present disclosure provides solid lipid nanoparticles comprising: at least one lipid selected from the group consisting of glycerides and fatty acids, at least one hydrophilic drug or amphiphilic drug and at least one emulsifier. The present disclosure also provides a process for preparing the solid lipid nanoparticles.

No. of Pages : 33 No. of Claims : 30

(12) PATENT APPLICATION PUBLICATION
(19) INDIA
(22) Date of filing of Application :12/11/2012
(21) Application No.9781/DELNP/2012 A
(43) Publication Date : 07/11/2014

(54) Title of the invention : CROSSING CAPACITY PROCESSING METHOD FOR OPTICAL TRANSPORT NETWORK (OTN) EQUIPMENT AND OTN EQUIPMENT

(51) International classification :B29L
(31) Priority Document No :201010164973.0
(32) Priority Date :13/04/2010
(33) Name of priority country :China
(86) International Application No :PCT/CN2010/077879
Filing Date :19/10/2010
(87) International Publication No : NA
(61) Patent of Addition to Application Number :NA
Filing Date :NA
(62) Divisional to Application Number :NA
Filing Date :NA

(71)**Name of Applicant :**
1)ZTE CORPORATION
Address of Applicant :ZTE Plaza Keji Road South Hi-Tech Industrial Park Nanshan District Shenzhen Guangdong Province 518057 China
(72)**Name of Inventor :**
1)WENKAI MA
2)JIANG ENG

(57) Abstract :
The disclosure provides a crosJng c,..pacity processing method for Optical Transport Network (O T N) equipment and the O TN equipment, wherein the OTN equipment comprises a service unit and a crossing unit; the service unit comprises a first service subunit and a second service subunit. The method comprises the following steps: the first service subunit divides data TI which is mapped to T timeslots of N/2 lower backplane buses of the first service subunit into two parts; the second service subunit divides data T2 which is mapped to the T tirneslots of the N/2 lower backplane buses of the second service subunit into two parts; the first service subunit and the second service subunit exchange and recombine the data, and send recombined data to the crossing unit. The disclosure reduces the system cost and improves the utilization ratio of system.

No. of Pages : 23 No. of Claims : 10

(12) PATENT APPLICATION PUBLICATION
(19) INDIA
(22) Date of filing of Application :12/11/2012
(21) Application No.9782/DELNP/2012 A
(43) Publication Date : 07/11/2014

(54) Title of the invention : CUSTOMIZED CONTROL OF THE THERMAL COMFORT OF AN OCCUPANT OF A BUILDING

(51) International classification :B61G
(31) Priority Document No :1053752
(32) Priority Date :12/05/2010
(33) Name of priority country :France
(86) International Application No :PCT/EP2011/057601
Filing Date :11/05/2011
(87) International Publication No : NA
(61) Patent of Addition to Application Number :NA
Filing Date :NA
(62) Divisional to Application Number :NA
Filing Date :NA

(71)**Name of Applicant :**
1)COMMISSARIAT A L™ENERGIE ATOMIQUE ET AUX ENERGIES ALTERNATIVES
Address of Applicant :25 Rue Leblanc Btiment Le Ponant D 75015 Paris France
(72)**Name of Inventor :**
1)NOUVEL Romain
2)ALESSI Franck

(57) Abstract :
A method of controlling a heating and/or ventilation and/or air-conditioning (HVAC) system characterized in that it comprises the steps of: (12) Calculation of a theoretical thermal comfort parameter (PMValgo) for at least one occupant of at least one area of a building on the basis of at least one parameter specific to the occupant such as their metabolic rate (met) and/or their clothing (clo) and controlling a heating and/or ventilation and/or air-conditioning (HVAC) system so that the theoretical thermal comfort parameter converges toward a predefined thermal comfort range corresponding to a satisfactory level of comfort (17) Correction of at least one parameter specific to the occupant if the real thermal sensation of the occupant is not satisfactory.

No. of Pages : 28 No. of Claims : 19

(12) PATENT APPLICATION PUBLICATION
(19) INDIA
(22) Date of filing of Application :12/11/2012
(21) Application No.9787/DELNP/2012 A
(43) Publication Date : 07/11/2014

(54) Title of the invention : HYDRAULIC TRANSMISSION DEVICE ALLOWING RELATIVELY QUIET COUPLING

(51) International classification :F01K
(31) Priority Document No :1052932
(32) Priority Date :16/04/2010
(33) Name of priority country :France
(86) International Application No :PCT/FR2011/050759
Filing Date :05/04/2011
(87) International Publication No : NA
(61) Patent of Addition to Application Number :NA
Filing Date :NA
(62) Divisional to Application Number :NA
Filing Date :NA

(71)**Name of Applicant :**
1)POCLAIN HYDRAULICS INDUSTRIE
Address of Applicant :Route de Compi¨gne F-60410 Verberie France
(72)**Name of Inventor :**
1)PRIGENT Andr
2)LAMBEY Julien

(57) Abstract :
The hydraulic transmission apparatus (10 210 310 410 510) comprises at least one declutchable hydraulic motor (26A 26B) having radial pistons and connected via two motor ducts (30 32 302A 322A) and a casing duct (40 240) connected to the inside of the casing. The apparatus further comprises clutching means that in order to perform the clutching of the motor are suitable for bringing a first one (322A) of the motor ducts to a "clutching" first pressure that is higher than the pressure in the casing while also making it possible to remove ...

No. of Pages : 51 No. of Claims : 15

(12) PATENT APPLICATION PUBLICATION
(19) INDIA
(22) Date of filing of Application :12/11/2012
(21) Application No.9789/DELNP/2012 A
(43) Publication Date : 07/11/2014

(54) Title of the invention : CHARGER

(51) International classification :H02J
(31) Priority Document No :10004063.3
(32) Priority Date :16/04/2010
(33) Name of priority country :EPO
(86) International Application No :PCT/EP2011/001877
Filing Date :13/04/2011
(87) International Publication No : NA
(61) Patent of Addition to Application Number :NA
Filing Date :NA
(62) Divisional to Application Number :NA
Filing Date :NA

(71)**Name of Applicant :**
1)JOSEPH V–GELE AG
Address of Applicant :Joseph-Vgele-Strae 1 67067 Ludwigshafen Germany
(72)**Name of Inventor :**
1)BUSCHMANN Martin
2)FICKEISEN Steffen
3)DIESNER Michael

(57) Abstract :
The invention relates to a feeder (B) for conveying paving mixture to a road paver whereby the feeder has a plurality of working assemblies (M Q 5 10) and a control area (12). According to the invention an automatic mode can be set in the control area (12) for at least one of the working assemblies and a conveyor main switch (15) is provided upon operation of which all assemblies set to automatic mode are activated with predetermined operating parameters.

No. of Pages : 12 No. of Claims : 10

(12) PATENT APPLICATION PUBLICATION
(19) INDIA
(22) Date of filing of Application :12/03/2012
(21) Application No.703/DEL/2012 A
(43) Publication Date : 07/11/2014

(54) Title of the invention : FORMULATION & EVALUATION OF GASTRORETENTIVE FLOATING MICROSPHERES OF CEFUROXIME AXETIL

(51) International classification :A61K
(31) Priority Document No :NA
(32) Priority Date :NA
(33) Name of priority country :NA
(86) International Application No :NA
Filing Date :NA
(87) International Publication No :NA
(61) Patent of Addition to Application Number :NA
Filing Date :NA
(62) Divisional to Application Number :NA
Filing Date :NA

(71)**Name of Applicant :**
1)PROF. K. K. JHA
Address of Applicant :C-1056, DDA FLATS, EAST OF LONI ROAD, DELHI-110093. India
2)ANUJ MITTAL
3)PATEL NIRAV RAMESHLAL, TMU
(72)**Name of Inventor :**
1)PROF. K.K. JHA
2)ANUJ MITTAL
3)PATEL NIRAV RAMESHLAL, TMU

(57) Abstract :
The present invention relates to floating microspheres of Cefuroxime axetil. The formulation provides an extended retention in the upper GIT(Gastro Intestinal Tract), which results in enhanced absorption and thereby improved bioavailability of the drug. The microspheres of Cefuroxime axetil are prepared using Hydroxy propyl methyl cellulose (K4M) and ethyl cellulose by non-aqueous solvent evaporation method.

No. of Pages : 30 No. of Claims : 9

(12) PATENT APPLICATION PUBLICATION
(19) INDIA
(22) Date of filing of Application :12/11/2012
(21) Application No.9803/DELNP/2012 A
(43) Publication Date : 07/11/2014

(54) Title of the invention : EXHAUST GAS EMISSION CONTROL SYSTEM

(51) International classification :C07C
(31) Priority Document No :2011-149027
(32) Priority Date :05/07/2011
(33) Name of priority country :Japan
(86) International Application No :PCT/JP2012/053483
Filing Date :15/02/2012
(87) International Publication No : NA
(61) Patent of Addition to Application Number :NA
Filing Date :NA
(62) Divisional to Application Number :NA
Filing Date :NA

(71)**Name of Applicant :**
1)KOMATSU LTD.
Address of Applicant :2-3-6 Akasaka Minato-ku Tokyo 107-8414 Japan
(72)**Name of Inventor :**
1)TOSHIYUKI KAMEI
2)SHOUHEI NAGASAKA

(57) Abstract :
AN EXHAUST GAS PURIFICATION DEVICE (1) COMPRISES: A MAIN BODY SHELL (31) AND AN OUTLET-SIDE SHELL (41) WHICH ARE CYLINDRICAL IN SHAPE AND ARE DETACHABLY DISPOSED IN SERIES ALONG A DIRECTION OF FLOW OF EXHAUST GAS; AND A CSF (32) DISPOSED INSIDE THE MAIN BODY SHELL (31). A HEAT INSULATION MAT (322) IS INTERPOSED BETWEEN THE MAIN BODY SHELL (31) AND THE CSF (32), A BULGING PORTION (51) IS PROVIDED IN AN END PORTION OF THE MAIN BODY SHELL (31) ON THE SIDE OF THE OUTLET-SIDE SHELL (41), AND A FLARE PORTION (61) WHICH GRADUALLY EXPANDS TOWARD THE MAIN BODY SHELL (31) IS PROVIDED IN AN END PORTION OF THE OUTLET-SIDE SHELL (41) ON THE SIDE OF THE MAIN BODY SHELL (31), WHEREIN THE SHELLS (31, 41) ARE CONNECTED WITH EACH OTHER BY MEANS OF A FASTENING DEVICE (7) WHICH HAS A V-INSERT (71) EXTENDING OVER THE BULGING PORTION (51) AND THE FLARE PORTION (61), AND AN END PORTION OF THE CSF (32) ON THE SIDE OF THE OUTLET-SIDE SHELL (41) PROTRUDES TOWARD THE OUTLET-SIDE SHELL (41) MORE THAN THE END PORTION OF THE HEAT INSULATION MAT (322) AND IS POSITIONED INSIDE THE END PORTION OF THE MAIN BODY SHELL (31).

No. of Pages : 26 No. of Claims : 4

(12) PATENT APPLICATION PUBLICATION
(19) INDIA
(22) Date of filing of Application :12/11/2012
(21) Application No.9804/DELNP/2012 A
(43) Publication Date : 07/11/2014

(54) Title of the invention : WORK VEHICLE

(51) International classification :B23B
(31) Priority Document No :2011-175533
(32) Priority Date :11/08/2011
(33) Name of priority country :Japan
(86) International Application No :PCT/JP2012/060442
Filing Date :18/04/2012
(87) International Publication No : NA
(61) Patent of Addition to Application Number :NA
Filing Date :NA
(62) Divisional to Application Number :NA
Filing Date :NA

(71)**Name of Applicant :**
1)KOMATSU LTD.
Address of Applicant :2-3-6 Akasaka Minato-ku Tokyo 107-8414 Japan
(72)**Name of Inventor :**
1)HIROAKI TAKESHIMA
2)YOSHITO KOMATSU

(57) Abstract :
Operating fluid is guided with a simple configuration to a lock-up clutch device in a configuration in which a drive shaft of a hydraulic pump is disposed inside a transmission input shaft This work vehicle has a hydraulic pump and a transmission 1. The transmission 1 includes a transmission body 5 that has a cylindrical input shaft 4, a torque converter body 9, a lock-up clutch device 10, a PTO drive shaft 12, and an oil channel 61. The lockup clutch device 10 includes a piston 41, an oil chamber 16b formed at the back surface of the piston 41, and a clutch unit. The PTO shaft 12 penetrates the inside of the input shaft 4 and is disposed coaxially to the input shaft 4, and transmits driving power to the hydraulic pump 13. The oil channel 60 is formed between the inner circumference surface of the input shaft 4 and the outer circumference surface of the PTO shaft 12, and communicates with the oil chamber 16b in the lock-up clutch device 10.

No. of Pages : 17 No. of Claims : 2

(12) PATENT APPLICATION PUBLICATION
(19) INDIA
(22) Date of filing of Application :27/02/2012
(21) Application No.545/DEL/2012 A
(43) Publication Date : 07/11/2014

(54) Title of the invention : COMPACTED COMPOST-GYPSUM BLOCKS

(51) International classification :B28B
(31) Priority Document No :NA
(32) Priority Date :NA
(33) Name of priority country :NA
(86) International Application No :NA
Filing Date :NA
(87) International Publication No :NA
(61) Patent of Addition to Application Number :NA
Filing Date :NA
(62) Divisional to Application Number :NA
Filing Date :NA

(71)**Name of Applicant :**
1)INDIAN COUNCIL OF AGRICULTURAL RESEARCH
Address of Applicant :KRISHI BHAWAN, DR. RAJENDRA PRASAD ROAD, NEW DELHI 110114, INDIA
(72)**Name of Inventor :**
1)PRAVEEN KUMAR
2)BOHRA HARISH CHANDRA
3)PATIL NITIN VASANTRAO

(57) Abstract :
In the present invention a compacted compost-gypsum block comprising compost material and an agriculturally adaptable binding agent is provided wherein the compacted compost-gypsum block is characterized by having bulk volume density of 0.65 to 0.76. The compost materials are obtained from biodegradable organic wastes including vegetable waste, fruit waste, agriculture waste, live stock manure and leaves and the agriculturally acceptable binding agent is gypsum. The composition of the compacted compost-gypsum block is further adapted depending on the intended end use applications compacted compost-gypsum block

No. of Pages : 29 No. of Claims : 22

(12) PATENT APPLICATION PUBLICATION
(19) INDIA
(22) Date of filing of Application :12/03/2012
(21) Application No.697/DEL/2012 A
(43) Publication Date : 07/11/2014

(54) Title of the invention : FORMULATION & EVALUATION OF SUSTAINED RELEASE MICRO PARTICLES OF ODANSTERON HYDROCHLORIDE

(51) International classification :A61K
(31) Priority Document No :NA
(32) Priority Date :NA
(33) Name of priority country :NA
(86) International Application No :NA
Filing Date :NA
(87) International Publication No :NA
(61) Patent of Addition to Application Number :NA
Filing Date :NA
(62) Divisional to Application Number :NA
Filing Date :NA

(71)**Name of Applicant :**
1)PROF. K. K. JHA
Address of Applicant :C-1056, DDA FLATS, EAST OF LONI ROAD, DELHI-110093. India
2)ANUJ MITTAL
3)ABHINAV KUMAR, TMU
(72)**Name of Inventor :**
1)PROF. K.K. JHA
2)ANUJ MITTAL
3)ABHINAV KUMAR, TMU

(57) Abstract :
The present invention relates to sustained release microparticles of Ondansetron HCI and the process to develop in order to achieve an extended release in the GIT (Gastro intestinal tract) which will result in enhanced absorption and thereby improved bioavailability. A sustained release microparticles of Ondansetron HCI, the microparticles comprising:a) HPMC E5; b)ethyl cellulose; and c)cellulose acetate phthalate (CAP), wherein the microparticles are prepared by single emulsion Solvent evaporation method.

No. of Pages : 26 No. of Claims : 10

(12) PATENT APPLICATION PUBLICATION
(19) INDIA
(22) Date of filing of Application :20/11/2012
(21) Application No.10186/DELNP/2012 A
(43) Publication Date : 07/11/2014

(54) Title of the invention : LUBRICATING STRUCTURE FOR GENERATOR MOTOR AND GENERATOR MOTOR

(51) International classification :B62L
(31) Priority Document No :2011-080709
(32) Priority Date :31/03/2011
(33) Name of priority country :Japan
(86) International Application No :PCT/JP2012/057804
Filing Date :26/03/2012
(87) International Publication No : NA
(61) Patent of Addition to Application Number :NA
Filing Date :NA
(62) Divisional to Application Number :NA
Filing Date :NA

(71)**Name of Applicant :**
1)KOMATSU LTD.
Address of Applicant :2-3-6 Akasaka Minato-ku Tokyo 107-8414 Japan
(72)**Name of Inventor :**
1)YUKIHIKO SUGIMOTO
2)TEIICHIROU CHIBA

(57) Abstract :
To reduce dispersion of lubrication condition of a bearing when the bearing of a generator motor is lubricated. To achieve the above object, a lubrication structure 100 of 5 the generator motor includes a first bearing 50F and a second bearing 50R rotatably supporting an input/output shaft 16 of the generator motor, a gap between bearings 56 provided between the first bearing 50F and the second bearing 50R, a cylindrical-shaped bearing attaching member 10 70 attached to inner peripheral parts of the first bearing 50F and the second bearing 50R, and a through hole. 71 penetrating the bearing attaching member 70 outward in a radial direction and opening in a position of the gap between bearings 56

No. of Pages : 56 No. of Claims : 8

(12) PATENT APPLICATION PUBLICATION
(19) INDIA
(22) Date of filing of Application :20/11/2012
(21) Application No.10187/DELNP/2012 A
(43) Publication Date : 07/11/2014

(54) Title of the invention : PROCESS FOR HOT ROLLING STEEL STRIPS AND HOT ROLLING TRAIN

(51) International classification :C22C
(31) Priority Document No :A754/2010
(32) Priority Date :04/05/2010
(33) Name of priority country :Austria
(86) International Application No :PCT/EP2011/056086
Filing Date :18/04/2011
(87) International Publication No : NA
(61) Patent of Addition to Application Number :NA
Filing Date :NA
(62) Divisional to Application Number :NA
Filing Date :NA

(71)**Name of Applicant :**
1)SIEMENS VAI METALS TECHNOLOGIES GMBH
Address of Applicant :Turmstrae 44 A-4031 Linz Austria
(72)**Name of Inventor :**
1)GERALD HOHENBICHLER
2)GERALD ECKERSTORFER
3)BERND LINZER

(57) Abstract :
The invention relates to an apparatus and a process for hot rolling steel strips (3) in a plurality of successive roll stands (F1gyF5), wherein the steel strips are finish---.rolled to the end thickness in one or more roll stands firstly in the austenitic state and then, after liquid cooling, in the ferritic state. In order to ensure that the steel strip actually reaches the ferritic state after the cooling, it is provided that the end thickness of the steel strip (3) is less than 3 mm, that the difference between the outlet temperature of the steel strip from the last roll stand (F3) before the liquid cooling and the equilibrium austenite limit temperature is set by the pilot control or regulation of the outlet temperature to no more than 70 K, preferably no more than 50 K, preferably less than 25 K, and that the liquid cooling is effected between two roll stands depending on the length Lc of a cooling section (1) by applying to both sides of the steel strip (3), in the cooling section, at least in each case a quantity of liquid Qu > 284/(Lc142) liters per minute and per meter of strip width, in particular Qu > 2284/ (Lc142) liters per minute and per meter of strip width, but not more than Qu = 7284/(Lc1,42) liters per minute and per meter of strip width, preferably Qu < 4284/(Lc1.42) liters per minute and per meter of strip width.

No. of Pages : 36 No. of Claims : 24

(12) PATENT APPLICATION PUBLICATION
(19) INDIA
(22) Date of filing of Application :04/10/2012
(21) Application No.3103/DEL/2012 A
(43) Publication Date : 07/11/2014

(54) Title of the invention : AN ARTIFICIAL NEURON MODEL TRIRON

(51) International classification :H04L25/49
(31) Priority Document No :NA
(32) Priority Date :NA
(33) Name of priority country :NA
(86) International Application No :NA
Filing Date :NA
(87) International Publication No : NA
(61) Patent of Addition to Application Number :NA
Filing Date :NA
(62) Divisional to Application Number :NA
Filing Date :NA

(71)**Name of Applicant :**
1)TRIPATHI, BIPIN, KUMAR
Address of Applicant :TYPE-IV, D-19, WEST CAMPUS HBTI KANPUR-208002, Uttar Pradesh India
(72)**Name of Inventor :**
1)TRIPATHI, BIPIN KUMAR

(57) Abstract :
The present invention relates generally to neural processing system, and more particularly to a higher order artificial neuron network system. It simulates the action of biological neuron, and more particularly, to artificial neuron whose functionality is defined through a new aggregation function to yield novel synergism of local and global optimization using fuzzy compensatory operation. The present invention generally relates to an artificial neuron structure and its process for machine learning and subsequent generalization. The present invention is applicable to variety of processes relating to information processing as well as for heuristic tasks for which normal computing systems are inefficient or inaccurate, such as voice recognition and synthesis, pattern recognition, artificial vision, robotics, automatic translation, associative storage approximation, prediction, intelligent system design, are few of them.

No. of Pages : 75 No. of Claims : 30

(12) PATENT APPLICATION PUBLICATION
(19) INDIA
(22) Date of filing of Application :13/03/2012
(21) Application No.726/DEL/2012 A
(43) Publication Date : 07/11/2014

(54) Title of the invention : DEVELOPMENT & IN-VITRO EVALUATION OF SUSTAINED RELEASE MICRO PARTICLES OF KETROLAC TROMETHAMENE

(51) International classification :A61K
(31) Priority Document No :NA
(32) Priority Date :NA
(33) Name of priority country :NA
(86) International Application No :NA
Filing Date :NA
(87) International Publication No :NA
(61) Patent of Addition to Application Number :NA
Filing Date :NA
(62) Divisional to Application Number :NA
Filing Date :NA

(71)**Name of Applicant :**
1)PROF. K.K. JHA
Address of Applicant :C-1056, DDA FLATS, EAST OF LONI ROAD, DELHI-110093. India
2)SHAWETA SHARMA
3)VAIBHAV RATHORE
4)TMU
(72)**Name of Inventor :**
1)PROF. K.K. JHA
2)SHAWETA SHARMA
3)VAIBHAV RATHORE
4)TMU

(57) Abstract :
The objective of present invention is to develop sustained release microparticles of Ketorolac Tromethamine in order to achieve an extended release in the GIT which may result in enhanced absorption and thereby improved bioavailability, with non-aqueous solvent evaporation method wherein release studies of each formulation was carried out on dissolution apparatus, and the polymers comprising Eudragit RS100, Ethyl cellulose and Hydroxy Propyl Methyl Cellulose E5 with dichloromethane, ethanol, acetone as organic solvents, liquid paraffin as base material, tween-80 0.02%w/v as an emulsifying agent contained magnesium stearate 0.2%w/v, n-hexane as hardener, petroleum ether for completely removing liquid paraffin.

No. of Pages : 27 No. of Claims : 9

(12) PATENT APPLICATION PUBLICATION
(19) INDIA
(22) Date of filing of Application :12/11/2012
(21) Application No.9825/DELNP/2012 A
(43) Publication Date : 07/11/2014

(54) Title of the invention : NOVEL MUTATED HUMANIZED 12G4 ANTIBODIES AND THE FRAGMENTS THEREOF AGAINST THE HUMAN ANTI-MLLERIAN HORMONE RECEPTOR TYPE II

(51) International classification :C12N
(31) Priority Document No :1053712
(32) Priority Date :12/05/2010
(33) Name of priority country :France
(86) International Application No :PCT/FR2011/050745
Filing Date :01/04/2011
(87) International Publication No : NA
(61) Patent of Addition to Application Number :NA
Filing Date :NA
(62) Divisional to Application Number :NA
Filing Date :NA

(71)**Name of Applicant :**
1)LFB BIOTECHNOLOGIES
Address of Applicant :3 avenue des Tropiques BP 305 Les Ulis F-91958 COURTABOBUF Cedex France
2)UNIVERSITE MONTPELLIER I
3)CENTRE NATIONAL DE LUTTE CONTRE LE CANCER
4)I.N.S.E.R.M. (INSTITUT NATIONAL DE LA SANT‰ ET DE LA RECHERCHE M‰DICALE)
(72)**Name of Inventor :**
1)BEHRENS Christian
2)NAVARRO-TEULON Isabelle

(57) Abstract :
The invention relates to novel mutated humanized 12G4 antibodies and fragments thereof directed against the anti-M¼llerian hormone type II receptor.

No. of Pages : 134 No. of Claims : 31

(12) PATENT APPLICATION PUBLICATION
(19) INDIA
(22) Date of filing of Application :12/11/2012
(21) Application No.9826/DELNP/2012 A
(43) Publication Date : 07/11/2014

(54) Title of the invention : MOTOR

(51) International classification :H02J
(31) Priority Document No :P201000491
(32) Priority Date :16/04/2010
(33) Name of priority country :Spain
(86) International Application No :PCT/ES2011/000116
Filing Date :13/04/2011
(87) International Publication No : NA
(61) Patent of Addition to Application Number :NA
Filing Date :NA
(62) Divisional to Application Number :NA
Filing Date :NA

(71)**Name of Applicant :**
1)FREIXAS VILA Ramon
Address of Applicant :Targa 32 43424 SARRAL TARRAGONA Spain
(72)**Name of Inventor :**
1)RAMON FREIXAS VILA

(57) Abstract :
The rotor is formed by two parallel shafts with groups of magnets and a material that orients the magnetic field in each group of magnets. The stator formed by groups of magnets is close to the rotor with the stator axis orthogonal to each rotor shaft. The groups of magnets of each rotor shaft are situated in attraction mode close behind one another on a helical line at a different distance from each rotor shaft the first group of magnets which interacts with the stator being the group farthest from each rotor shaft and the final group which interacts with the stator being the group closest to each rotor shaft. The invention is used for aiding torque such as in a pedal of a bicycle as the main force is from human muscle.

No. of Pages : 13 No. of Claims : 3

(12) PATENT APPLICATION PUBLICATION
(19) INDIA
(22) Date of filing of Application :12/03/2012
(21) Application No.698/DEL/2012 A
(43) Publication Date : 07/11/2014

(54) Title of the invention : FORMULATION & EVALUATION OF MOUTH DISSOLVING TABLET OF PEROXICAM

(51) International classification :A61K
(31) Priority Document No :NA
(32) Priority Date :NA
(33) Name of priority country :NA
(86) International Application No :NA
Filing Date :NA
(87) International Publication No :NA
(61) Patent of Addition to Application Number :NA
Filing Date :NA
(62) Divisional to Application Number :NA
Filing Date :NA

(71)**Name of Applicant :**
1)PROF. K. K. JHA
Address of Applicant :C-1056, DDA FLATS, EAST OF LONI ROAD, DELHI-110093. India
2)ANUJ MITTAL
3)ALOK GUPTA, TMU
(72)**Name of Inventor :**
1)PROF. K.K. JHA
2)ANUJ MITTAL
3)ALOK GUPTA, TMU

(57) Abstract :
The present invention relates to mouth dissolving tablet of Piroxicam. The formulation shows instantaneous pre gastric release of the drug in upper gastro intestinal tract which results in enhanced bioavailability of drug bypassing the first pass metabolism. The formulation is prepared by direct compression technique using superdisintegrants such as cross carmellose sodium and sodium starch glycolate with other excipients such as micro crystalline cellulose and D-mannitol as diluents, aspartame as sweeting agent, talc and magnesium stearate as glidant and lubricant respectively, colloidal silicon dioxide as disintegrant as well as glidant. The mouth dissolving tablet formulation of micronized Piroxicam can be used as novel drug dosage form as pediatrics and geriatrics with improved patients compliance and enhanced bioavailabity.

No. of Pages : 29 No. of Claims : 10

(12) PATENT APPLICATION PUBLICATION
(19) INDIA
(22) Date of filing of Application :13/03/2012
(21) Application No.724/DEL/2012 A
(43) Publication Date : 07/11/2014

(54) Title of the invention : DEVELOPMENT & INVITRO EVALUATION OF COLON TARGETED MATRIX TABLET OF ACECLOFENAC

(51) International classification :A61K
(31) Priority Document No :NA
(32) Priority Date :NA
(33) Name of priority country :NA
(86) International Application No :NA
Filing Date :NA
(87) International Publication No :NA
(61) Patent of Addition to Application Number :NA
Filing Date :NA
(62) Divisional to Application Number :NA
Filing Date :NA

(71)**Name of Applicant :**
1)PROF. K.K. JHA
Address of Applicant :C-1056, DDA FLATS, EAST OF LONI ROAD, DELHI-110093 India
2)AKHIL SHARMA
3)MEGHAL PARMAR
4)TMU
(72)**Name of Inventor :**
1)PROF. K.K. JHA
2)AKHIL SHARMA
3)MEGHAL PARMAR
4)TMU

(57) Abstract :
The objective of the present study was to develop matrix tablet of aceclofenac in order to target the drug to the colon which may result in enhanced absorption and thereby improved bioavailability. Preparation includes the matrix tablet of aceclofenac in eight batches using sodium alginate and gum acacia in different drug & polymer ratios by wet granulation method. The formulation of different batches was subjected to the study of various pre- compression parameters such as bulk density, tapped density, angle of repose, carrs index & hausner ratio and post compression parameters such as hardness, weight variation, thickness, uniformity of drug content and in vitro drug release determinations. In-vitro release study of each formulation was carried out on dissolution apparatus (TDL 06L, Electro lab) using 1.2, 6.8 & 7.4 pH buffers and simulated colonic fluid upto 12 hrs. Various results were inferred such as bulk density, tapped density, angle of repose carrs index , hausner ratio ,hardness test for uncoated formulations i.e. Fl- F8 and coated tablets CF1- CF2 , friability test for Fl- F8 and CF1- CF8 , weight variation test for Fl to F8 and for CF1 to CF8 , drug content uniformity test for Fl - F8 and for CF1 - CF8 ,thickness test for Fl - F8 and for CF1 - CF8, in vitro drug release determination of uncoated tablets in phosphate buffers and simulated colonic media .

No. of Pages : 20 No. of Claims : 8

(12) PATENT APPLICATION PUBLICATION
(19) INDIA
(22) Date of filing of Application :14/11/2012
(21) Application No.9856/DELNP/2012 A
(43) Publication Date : 07/11/2014

(54) Title of the invention : LOW PROFILE GUIDING CATHETER FOR NEUROVASCULAR APPLICATIONS

(51) International classification :A61B
(31) Priority Document No :61/325,784
(32) Priority Date :19/04/2010
(33) Name of priority country :U.S.A.
(86) International Application No :PCT/US2011/032945
Filing Date :19/04/2011
(87) International Publication No : NA
(61) Patent of Addition to Application Number :NA
Filing Date :NA
(62) Divisional to Application Number :NA
Filing Date :NA

(71)**Name of Applicant :**
1)MICRUS ENDOVASCULAR LLC
Address of Applicant :821 Fox Lane San Jose CA 95131 U.S.A.
(72)**Name of Inventor :**
1)ERIC WILLIAMS
2)JOSEPH HORTON
3)ROBERTO ECHARRI

(57) Abstract :
Provided is a braking control system including: an internal combustion engine serving as a power source of a vehicle; a brake servo unit operated by a negative pressure supplied thereto; a passage configured to supp1y an intake negative pressure of the internal combustion engine to the brake servo unit; and a negative pressure pump configured to generate a negative pressure by being driven by power transmitted from a wheel. of the vehic1e and transmit the generated negative pressure to the brake servo unit, wherein the negative pressure pump is driven so as to supply the negative pressure to the brake servo unit (570) during execution of inertia running (YES i n S10) in which the internal combustion engine stops and the vehicle runs by inertin.

No. of Pages : 14 No. of Claims : 17

(12) PATENT APPLICATION PUBLICATION
(19) INDIA
(22) Date of filing of Application :20/11/2012
(21) Application No.10038/DELNP/2012 A
(43) Publication Date : 07/11/2014

(54) Title of the invention : WIRE PROFILE FOR CARD CLOTHING

(51) International classification :A47J
(31) Priority Document No :10161813.0
(32) Priority Date :04/05/2010
(33) Name of priority country :EPO
(86) International Application No :PCT/EP2011/057047
Filing Date :03/05/2011
(87) International Publication No : NA
(61) Patent of Addition to Application Number :NA
Filing Date :NA
(62) Divisional to Application Number :NA
Filing Date :NA

(71)**Name of Applicant :**
1)NV BEKAERT SA
Address of Applicant :Bekaertstraat 2 B-8550 Zwevegem Belgium
2)BEKAERT CARDING SOLUTIONS NV
(72)**Name of Inventor :**
1)LIEVEN VANGHELUWE
2)PHILIP FURNIER
3)KAREL VAN EENOOGHE

(57) Abstract :
A wire profile (110) for card clothing comprising a rib portion and plurality of teeth over the length of said rib portion (114), wherein said teeth are sloped with back slops (112) representing the backbone of said teeth and front slope (118,120,122) representing the side in direct contact with fibre, said back slaps having a tangent forming a back angle (P) with the rib, said front slope being divided into at least two segments, a tip segment and an undercut segment, wherein said tip segment converges with the said back slope to form a tip (116) of said teeth and said tip segment (118) aewes to penetrate bebeen fibres, said tip segment having a tangent Poming a tip angle (y) with the rib podion, said undercut segment (120) is capable OF retaining the fibres, said undercut segment having a tangent foming an undercut angle (a) with the rib portion further charadedzed in that the aaid undercut angle(a) being at each point in the undercut segment greater than the maximum of the back angle (P) and being smaller than the smallest value of the tip angle (y) in order Is allow rotary punching.

No. of Pages : 18 No. of Claims : 15

(12) PATENT APPLICATION PUBLICATION
(19) INDIA
(22) Date of filing of Application :20/11/2012
(21) Application No.10039/DELNP/2012 A
(43) Publication Date : 07/11/2014

(54) Title of the invention : AT-BIT EVALUATION OF FORMATION PARAMETERS AND DRILLING PARAMETERS

(51) International classification :A47J
(31) Priority Document No :61/328,782
(32) Priority Date :28/04/2010
(33) Name of priority country :U.S.A.
(86) International Application No :PCT/US2011/033957
Filing Date :26/04/2011
(87) International Publication No : NA
(61) Patent of Addition to Application Number :NA
Filing Date :NA
(62) Divisional to Application Number :NA
Filing Date :NA

(71)**Name of Applicant :**
1)BAKER HUGHES INCORPORATED
Address of Applicant :BAKER HUGHES INCORPORATED U.S.A.
(72)**Name of Inventor :**
1)SUNIL KUMAR
2)HENDRIK JOHN
3)DAN SCOTT
4)ANTHONY DIGIOVANNI

(57) Abstract :
An apparatus for forming a wellbore in a formation may include a bit body and a sensor in the bit body. The sensor may include at least one cutting element and may be configured to generate information relating to a parameter of interest when the drill bit engages a wellbore surface.

No. of Pages : 17 No. of Claims : 13

(12) PATENT APPLICATION PUBLICATION
(19) INDIA
(22) Date of filing of Application :12/03/2012
(21) Application No.702/DEL/2012 A
(43) Publication Date : 07/11/2014

(54) Title of the invention : FORMULATION & EVALUATION OF COLON TARGETING IMMEDIATE RELEASE MELOXICAM TABLET

(51) International classification :A61K
(31) Priority Document No :NA
(32) Priority Date :NA
(33) Name of priority country :NA
(86) International Application No :NA
Filing Date :NA
(87) International Publication No :NA
(61) Patent of Addition to Application Number :NA
Filing Date :NA
(62) Divisional to Application Number :NA
Filing Date :NA

(71)**Name of Applicant :**
1)PROF. K. K. JHA
Address of Applicant :C-1056, DDA FLATS, EAST OF LONI ROAD, DELHI-110093. India
2)ANUJ MITTAL
3)AKHIL GUPTA, TMU
(72)**Name of Inventor :**
1)PROF. K.K. JHA
2)ANUJ MITTAL
3)AKHIL GUPTA, TMU

(57) Abstract :
The present invention relates to a site-specific (colonic) pharmaceutical formulation prepared by direct compression method and sublimation technique for enhanced local absorption and improved bioavailability. The colon targeted immediate release tablet formulation contains Meloxicam as an active ingredient in pure, lyophilized, micronized or -cyclodextrin complex form in variable ratios along with superdisintegrant, other excipients, diluents, surfactant, glidant and lubricants. Formulation tablets are coated with eudragit S-100 polymer to achieve colon targeting.

No. of Pages : 27 No. of Claims : 10

(12) PATENT APPLICATION PUBLICATION
(19) INDIA
(22) Date of filing of Application :12/11/2012
(21) Application No.9816/DELNP/2012 A
(43) Publication Date : 07/11/2014

(54) Title of the invention : METHOD AND DEVICE PERTAINING TO THE SERVICE NEED OF A FILTER IN A SCR-SYSTEM™S LIQUID SUPPLY DEVICE

(51) International classification :B23B
(31) Priority Document No :1050400-9
(32) Priority Date :23/04/2010
(33) Name of priority country :Sweden
(86) International Application No :PCT/SE2011/050476
Filing Date :19/04/2011
(87) International Publication No : NA
(61) Patent of Addition to Application Number :NA
Filing Date :NA
(62) Divisional to Application Number :NA
Filing Date :NA

(71)**Name of Applicant :**
1)SCANIA CV AB
Address of Applicant :S-151 87 Sdertlje Sweden
(72)**Name of Inventor :**
1)DANIEL ARVIDSSON
2)PER BREMBERG
3)ANDREAS LILJESTRAND

(57) Abstract :
A method pedaining to SCR systems for exhaust cleaning whsmby liquid is then supplied t9 a feed device (230) via which it is then supplied to a 5 dosing mi(t2 50) at a consumption point sf the SGR sptam, comprising the stsp of: - mntinuously determining cumulative amounts of liquid dosed via the dosing unit (2501, characarised by the steps of 9 - ddstemining neeti for mplacement or cleaning of a filter tdnit (F) for said liquid ow the basis Q$ said eumulativs amounts of liquid d s s d ; - dosing at least part sf the liquid supp\ied via the feed device (230); and - fwding undsssd liquid beck in a return flow to enable it to be supplied again lo said feed device (230).

No. of Pages : 35 No. of Claims : 21

(12) PATENT APPLICATION PUBLICATION
(19) INDIA
(22) Date of filing of Application :19/12/2013
(21) Application No.2408/MUMNP/2013 A
(43) Publication Date : 07/11/2014

(54) Title of the invention : DENTAL IMPLANT

(51) International classification :A61C8/00
(31) Priority Document No :61/492382
(32) Priority Date :02/06/2011
(33) Name of priority country :U.S.A.
(86) International Application No :PCT/IL2012/000218
Filing Date :03/06/2012
(87) International Publication No :WO 2012/164560
(61) Patent of Addition to Application Number :NA
Filing Date :NA
(62) Divisional to Application Number :NA
Filing Date :NA

(71)**Name of Applicant :**
1)MIS IMPLANTS TECHNOLOGIES LTD.
Address of Applicant :P.O.Box 7 Bar Lev Industrial Park 2015600 Doar Na Misgav Israel
(72)**Name of Inventor :**
1)JACOBY Yuval
2)BICHACHO Nitzan

(57) Abstract :
A dental implant including an implant body having a top surface and at least one non annular cutaway portion longitudinally extending downwardly from the top surface along one side of the body and outwardly to the periphery and a method for making the implant. The implant body preferably includes a body portion and a head portion integrally formed with the body portion the body portion has a periphery and the head portion has a non circular periphery and the periphery of the head portion is smaller than the periphery of the body portion.

No. of Pages : 28 No. of Claims : 16

(12) PATENT APPLICATION PUBLICATION
(19) INDIA
(22) Date of filing of Application :19/12/2013
(21) Application No.2409/MUMNP/2013 A
(43) Publication Date : 07/11/2014

(54) Title of the invention : NON GRAIN ORIENTED MAGNETIC STEEL SHEET

(51) International classification :C22C38/00,C22C38/60,H01F1/16
(31) Priority Document No :2011-211553
(32) Priority Date :27/09/2011
(33) Name of priority country :Japan
(86) International Application No :PCT/JP2012/006141
Filing Date :26/09/2012
(87) International Publication No :WO 2013/046661
(61) Patent of Addition to Application Number :NA
Filing Date :NA
(62) Divisional to Application Number :NA
Filing Date :NA

(71)**Name of Applicant :**
1)JFE STEEL CORPORATION
Address of Applicant :2 3 Uchisaiwai cho 2 chome Chiyoda ku Tokyo 1000011 Japan
(72)**Name of Inventor :**
1)ODA Yoshihiko
2)TODA Hiroaki
3)NAKANISHI Tadashi
4)ZAIZEN Yoshiaki

(57) Abstract :
Provided is a non grain oriented magnetic steel sheet having low iron loss in the high magnetic field region. The non grain oriented magnetic steel sheet according to the present invention is formed from by mass% 0.005% or less of C 5% or less of Si 3% or less of Al 5% or less of Mn 0.005% or less of S 0.2% or less of P 0.005% or less of N 0.001 to 0.04% of Mo 0.0030% or less of Ti 0.0050% or less of Nb 0.0050% or less of V and 0.0020% or less of Zr; one or both selected from Sb and Sn provided that the total amount is 0.001 to 0.1%; and iron and inevitable impurities as the balance.

No. of Pages : 20 No. of Claims : 5

(12) PATENT APPLICATION PUBLICATION
(19) INDIA
(22) Date of filing of Application :19/12/2013
(21) Application No.2410/MUMNP/2013 A
(43) Publication Date : 07/11/2014

(54) Title of the invention : METHOD AND SYSTEM FOR TREATING WASTE MATERIAL

(51) International classification :C02F3/34,C12M1/36
(31) Priority Document No :61/504264
(32) Priority Date :04/07/2011
(33) Name of priority country :U.S.A.
(86) International Application No :PCT/IL2012/050234
Filing Date :04/07/2012
(87) International Publication No :WO 2013/005212
(61) Patent of Addition to Application Number :NA
Filing Date :NA
(62) Divisional to Application Number :NA
Filing Date :NA

(71)**Name of Applicant :**
1)BIOLOGICAL PETROLEUM CLEANING LTD.
Address of Applicant :14 Yosef Nedava Street Apt. 3 4681013 Herzlia Israel
(72)**Name of Inventor :**
1)AMIR David
2)KLEINSTERN Amir
3)BITTAN BANIN Gili

(57) Abstract :
A method of treating wastewater in a wastewater treatment system is disclosed. The wastewater treatment system receives an influent of the wastewater and having at least a first bioreactor and a second bioreactor each having therein bacteria for treating the waste material. The method comprises: monitoring a load parameter being indicative of a load on the second bioreactor; responsively to a monitored value of the load parameter controlling at least one flow rate selected from the group consisting of (i) a flow rate from the influent to the second bioreactor through the first bioreactor and (ii) a flow rate from the influent directly to the second bioreactor so as to maintain a generally constant and predetermined load on the second bioreactor.

No. of Pages : 48 No. of Claims : 27

(12) PATENT APPLICATION PUBLICATION
(19) INDIA
(22) Date of filing of Application :19/12/2013

(21) Application No.2411/MUMNP/2013 A
(43) Publication Date : 07/11/2014

(54) Title of the invention : VARIANTS OF HUMANIZED IMMUNOMODULATORY MONOCLONAL ANTIBODIES

(51) International classification :C07K16/28,A61K39/395
(31) Priority Document No :61/511055
(32) Priority Date :24/07/2011
(33) Name of priority country :U.S.A.
(86) International Application No :PCT/IL2012/050267
Filing Date :23/07/2012
(87) International Publication No :WO 2013/014668
(61) Patent of Addition to Application Number :NA
Filing Date :NA
(62) Divisional to Application Number :NA
Filing Date :NA

(71)**Name of Applicant :**
1)CURETECH LTD.
Address of Applicant :42 Hayarkon Street 81227 Yavne Israel
(72)**Name of Inventor :**
1)ROTEM YEHUDAR Rinat
2)SCHICKLER Michael

(57) Abstract :
The present invention relates to humanized monoclonal antibodies pharmaceutical compositions comprising same and use thereof for the treatment of a variety of indications particularly cancer and immunodeficiency disorders. In particular the present invention provides modified antibodies or fragments thereof having specific amino acid modifications compared to the humanized monoclonal immunomodulatory antibody termed hBAT 1.

No. of Pages : 78 No. of Claims : 28

(12) PATENT APPLICATION PUBLICATION
(19) INDIA
(22) Date of filing of Application :21/12/2013
(21) Application No.2412/MUMNP/2013 A
(43) Publication Date : 07/11/2014

(54) Title of the invention : ADDITIVES FOR CERAMIC GLAZES

(51) International classification :C03C8/14,C03B1/02,C04B41/50
(31) Priority Document No :VA2011A000023
(32) Priority Date :01/08/2011
(33) Name of priority country :Italy
(86) International Application No :PCT/EP2012/064331
Filing Date :20/07/2012
(87) International Publication No :WO 2013/017445
(61) Patent of Addition to Application Number :NA
Filing Date :NA
(62) Divisional to Application Number :NA
Filing Date :NA

(71)**Name of Applicant :**
1)LAMBERTI SPA
Address of Applicant :Ufficio Brevetti via Piave 18 I 21041 Albizzate (VA) Italy
(72)**Name of Inventor :**
1)CHIAVACCI Dario
2)CANZIANI Mattia
3)CRESPI Stefano
4)VIGANO Laura
5)FLORIDI Giovanni
6)LI BASSI Giuseppe

(57) Abstract :
Use of extruded pellets comprising carboxymethyl cellulose and at least another ceramic glaze additive for the preparation of ceramic glaze slips.

No. of Pages : 23 No. of Claims : 12

(12) PATENT APPLICATION PUBLICATION
(19) INDIA
(22) Date of filing of Application :09/12/2013

(21) Application No.2302/MUMNP/2013 A
(43) Publication Date : 07/11/2014

(54) Title of the invention : REFRIGERATION COMPRESSOR LUBRICANT

(51) International classification	:C10M105/36,C10M105/32,C10M169/04
(31) Priority Document No	:61/500867
(32) Priority Date	:24/06/2011
(33) Name of priority country	:U.S.A.
(86) International Application No Filing Date	:PCT/US2012/043319 :20/06/2012
(87) International Publication No	:WO 2012/177742
(61) Patent of Addition to Application Number Filing Date	:NA :NA
(62) Divisional to Application Number Filing Date	:NA :NA

(71)**Name of Applicant :**
1)EMERSON CLIMATE TECHNOLOGIES INC.
Address of Applicant :1675 W. Campbell Road Sidney Ohio 45365 U.S.A
(72)**Name of Inventor :**
1)REBROVIC Louis
2)BOGGESS William Bradford

(57) Abstract :
The disclosed lubricant compositions comprise a mixture of from about 1 99% by weight of the mixture of one or more ester compounds Formu second ester compounds Formula (II) wherein R R R R R R R and Rare each H or methyl; a+x b+y. and c+z are integers of 1 to about 20 and m chain and branched substituted or unsubstituted
alkyl alkenyl cycloalkyl aryl alkylaryl arylalkyl alkylcycloalkyl cycloalkylalkyl arylcycloalkyl cycloalkylaryl alkylcycloalkylaryl alkylarylcyclo cycloalkylarylalkyl groups having 1 to about 17 carbons. The lubricant composition may be combined with a refrigerant to form a refrigerant lu transfer apparatus.

No. of Pages : 53 No. of Claims : 28

(12) PATENT APPLICATION PUBLICATION
(19) INDIA
(22) Date of filing of Application :23/12/2013
(21) Application No.2418/MUMNP/2013 A
(43) Publication Date : 07/11/2014

(54) Title of the invention : SYSTEM AND METHOD FOR PRIORITIZING REQUESTS TO A SIM

(51) International classification :H04L29/08
(31) Priority Document No :61/512356
(32) Priority Date :27/07/2011
(33) Name of priority country :U.S.A.
(86) International Application No :PCT/US2012/048640
Filing Date :27/07/2012
(87) International Publication No :WO 2013/016667
(61) Patent of Addition to Application Number :NA
Filing Date :NA
(62) Divisional to Application Number :NA
Filing Date :NA

(71)**Name of Applicant :**
1)QUALCOMM INCORPORATED
Address of Applicant :Attn: International IP Administration 5775 Morehouse Drive San Diego California 92121 U.S.A.
(72)**Name of Inventor :**
1)BERIONNE Michele
2)SHANKAR Vivek
3)HEGDE K. Shreyas
4)RUVALCABA J. Alfredo

(57) Abstract :
The method and system relate to prioritizing access and shaping traffic to the SIM such that the requests to the SIM that pertain to registering the wireless mobile device on a network are given a higher priority than other requests to the SIM. The higher priority requests that relate to registering the mobile device on a network may be processed by the SIM prior to at least one other request that is not related to registering the mobile device on the network.

No. of Pages : 22 No. of Claims : 25

(12) PATENT APPLICATION PUBLICATION
(19) INDIA
(22) Date of filing of Application :23/12/2013
(21) Application No.2419/MUMNP/2013 A
(43) Publication Date : 07/11/2014

(54) Title of the invention : WIRELESS DEVICE POSITIONING IN MULTICARRIER CONFIGURATIONS

(51) International classification :H04W64/00
(31) Priority Document No :61/499897
(32) Priority Date :22/06/2011
(33) Name of priority country :U.S.A.
(86) International Application No :PCT/US2012/043758
Filing Date :22/06/2012
(87) International Publication No :WO 2012/178016
(61) Patent of Addition to Application Number :NA
Filing Date :NA
(62) Divisional to Application Number :NA
Filing Date :NA

(71)**Name of Applicant :**
1)QUALCOMM INCORPORATED
Address of Applicant :5775 Morehouse Drive San Diego CA 92121 1714 U.S.A.
(72)**Name of Inventor :**
1)TENNY Nathan E.

(57) Abstract :
The described aspects include methods and apparatus for performing positioning for a user equipment (UE). The UE can communicate with a plurality of serving cells in a multicarrier configuration and can indicate a plurality of serving cell identifiers corresponding to the plurality of serving cells in a message to a positioning server. The positioning server can obtain location information corresponding to at least a portion of a plurality of cells or related eNBs related to the plurality of serving cell identifiers and can communicate the location information to the UE. The UE can perform positioning based at least in part on the location information.

No. of Pages : 59 No. of Claims : 70

(12) PATENT APPLICATION PUBLICATION
(19) INDIA
(22) Date of filing of Application :23/12/2013
(21) Application No.2420/MUMNP/2013 A
(43) Publication Date : 07/11/2014

(54) Title of the invention : METHODS FOR CONVERTING LIGNOCELLULOSIC MATERIAL TO USEFUL PRODUCTS

(51) International classification :C12P7/10,C08H8/00
(31) Priority Document No :61/495541
(32) Priority Date :10/06/2011
(33) Name of priority country :U.S.A.
(86) International Application No :PCT/EP2012/060860
Filing Date :08/06/2012
(87) International Publication No :WO 2012/168407
(61) Patent of Addition to Application Number :NA
Filing Date :NA
(62) Divisional to Application Number :NA
Filing Date :NA

(71)**Name of Applicant :**
1)SYNGENTA PARTICIPATIONS AG
Address of Applicant :Schwarzwaldallee 215 CH 4058 Basel Switzerland.
2)QUEENSLAND UNIVERSITY OF TECHNOLOGY
(72)**Name of Inventor :**
1)ZHANG Zhanying
2)O`HARA Ian Mark
3)DOHERTY William Orlando Sinclair

(57) Abstract :
The present invention provides compositions and methods for the pretreatment of lignocellulosic material. The present invention further provides for pretreated lignocellulosic material that can be used to produce useful products such as fermentable sugars.

No. of Pages : 61 No. of Claims : 25

(12) PATENT APPLICATION PUBLICATION
(19) INDIA
(22) Date of filing of Application :23/12/2013
(21) Application No.2421/MUMNP/2013 A
(43) Publication Date : 07/11/2014

(54) Title of the invention : SYSTEMS METHODS AND APPARATUS FOR MANAGING MULTIPLE RADIO ACCESS BEARER COMMUNICATIONS IN POWER LIMITED CONDITION

(51) International classification :H04W52/32
(31) Priority Document No :61/504068
(32) Priority Date :01/07/2011
(33) Name of priority country :U.S.A.
(86) International Application No :PCT/US2012/045324
Filing Date :02/07/2012
(87) International Publication No :WO 2013/006587
(61) Patent of Addition to Application Number :NA
Filing Date :NA
(62) Divisional to Application Number :NA
Filing Date :NA

(71)**Name of Applicant :**
1)QUALCOMM INCORPORATED
Address of Applicant :Attn: International IP Administration 5775 Morehouse Drive San Diego California 92121 U.S.A.
(72)**Name of Inventor :**
1)CATOVIC Amer
2)EL SAIDNY Mohamed A.

(57) Abstract :
Systems devices and methods for managing multiple radio access bearer communications are provided. In one aspect a device configured to communicate a voice and data communication via a wireless communication link is provided. The device includes a receiver configured to receive information selection criteria associated with a power limited condition. The device further includes a processor configured to detect the power limited condition. The processor is further configured to select information for transmission on a data channel independent of the received information selection criteria.

No. of Pages : 32 No. of Claims : 28

(12) PATENT APPLICATION PUBLICATION
(19) INDIA
(22) Date of filing of Application :17/12/2013
(21) Application No.2390/MUMNP/2013 A
(43) Publication Date : 07/11/2014

(54) Title of the invention : SYSTEMS METHODS AND APPARATUSES FOR LOW OVERHEAD WIRELESS BEACON TIMING

(51) International classification :H04W28/06,H04W48/08,H04W48/12
(31) Priority Document No :61/506136
(32) Priority Date :10/07/2011
(33) Name of priority country :U.S.A.
(86) International Application No :PCT/US2012/046111
Filing Date :10/07/2012
(87) International Publication No :WO 2013/009776
(61) Patent of Addition to Application Number :NA
Filing Date :NA
(62) Divisional to Application Number :NA
Filing Date :NA

(71)**Name of Applicant :**
1)QUALCOMM INCORPORATED
Address of Applicant :Attn: International IP Administration 5775 Morehouse Drive San Diego California 92121 1714 U.S.A.
(72)**Name of Inventor :**
1)ABRAHAM Santosh Paul
2)FREDERIKS Guido Robert
3)MERLIN Simone
4)WENTINK Maarten Menzo

(57) Abstract :
Systems methods and devices for communicating a compressed beacon are described herein. In some aspects a method of communicating in a wireless network includes transmitting at an access point a full beacon at a first multiple of a beacon interval. The method further includes transmitting a compressed beacon at each beacon interval that is not the first multiple of the beacon interval. Another method of communicating in a wireless network includes receiving at a wireless device a full beacon at a first multiple of a beacon interval. The method further includes receiving a compressed beacon at a beacon interval that is not the first multiple of the beacon interval.

No. of Pages : 75 No. of Claims : 112

(12) PATENT APPLICATION PUBLICATION
(19) INDIA
(22) Date of filing of Application :17/12/2013
(21) Application No.2391/MUMNP/2013 A
(43) Publication Date : 07/11/2014

(54) Title of the invention : FORMING FABRICS

(51) International classification :D21F 1/00
(31) Priority Document No :10/985,571
(32) Priority Date :11/11/2004
(33) Name of priority country :U.S.A.
(86) International Application No :PCT/US2005/039860
Filing Date :02/11/2005
(87) International Publication No :WO 2006/052689
(61) Patent of Addition to Application Number :NA
Filing Date :NA
(62) Divisional to Application Number :604/MUMNP/2007
Filed on :25/04/2007

(71)**Name of Applicant :**
1)ALBANY INTERNATIONAL CORP.,
Address of Applicant :1373 BROADWAY ALBANY NEW YORK 12204 U.S.A.
(72)**Name of Inventor :**
1)EAGLES Dana

(57) Abstract :
A papermaker™s fabric for use as a forming fabric. The fabric may include bondable or meltable monofilament yarns which may be formed from materials that retain substantial strength and tenacity after thermal treatment. Further, the remaining yarns in the forming fabric may be formed from materials that have a higher melting temperature than the monofilament material that will be thermally bonded or melted.

No. of Pages : 22 No. of Claims : 7

(12) PATENT APPLICATION PUBLICATION
(19) INDIA
(22) Date of filing of Application :16/12/2013
(21) Application No.2376/MUMNP/2013 A
(43) Publication Date : 07/11/2014

(54) Title of the invention : THERAPEUTIC COMPOSITIONS OF SPECIFIED HERBAL FORMULATIONS AND USES THEREOF

(51) International classification :A61K36/185,A61K36/22,A61K36/23
(31) Priority Document No :61/486724
(32) Priority Date :16/05/2011
(33) Name of priority country :U.S.A.
(86) International Application No :PCT/US2012/037974
Filing Date :15/05/2012
(87) International Publication No :WO 2013/106068
(61) Patent of Addition to Application Number :NA
Filing Date :NA
(62) Divisional to Application Number :NA
Filing Date :NA

(71)**Name of Applicant :**
1)HAUS BIOCEUTICALS INC.
Address of Applicant :755 Research Parkway Suite 460 Oklahoma City OK 73104 U.S.A.
(72)**Name of Inventor :**
1)YESUDAS Tomy
2)ALEX Philip
3)CENTOLA Michael
4)PAYNE Adam Joshua

(57) Abstract :
Disclosed herein are herbal formulations developed for the management of acute and chronic inflammatory conditions and infectious diseases. The formulations can also be combined with an active or inactive pharmaceutical ingredient and/or a pharmaceutically acceptable excipient.

No. of Pages : 78 No. of Claims : 70

(12) PATENT APPLICATION PUBLICATION
(19) INDIA
(22) Date of filing of Application :17/12/2013
(21) Application No.2389/MUMNP/2013 A
(43) Publication Date : 07/11/2014

(54) Title of the invention : MULTIPLE ZONE SCANNING ORDER FOR VIDEO CODING

(51) International classification :H04N7/26,H04N7/30,H04N19/00
(31) Priority Document No :61/502753
(32) Priority Date :29/06/2011
(33) Name of priority country :U.S.A.
(86) International Application No :PCT/US2012/044983
Filing Date :29/06/2012
(87) International Publication No :WO 2013/003743
(61) Patent of Addition to Application Number :NA
Filing Date :NA
(62) Divisional to Application Number :NA
Filing Date :NA

(71)**Name of Applicant :**
1)QUALCOMM Incorporated
Address of Applicant :ATTN: International IP Administration 5775 Morehouse Drive San Diego California 92121 1714 U.S.A.
(72)**Name of Inventor :**
1)ZHENG Yunfei
2)WANG Xianglin
3)KARCZEWICZ Marta

(57) Abstract :
A method for encoding transform coefficients in a video encoding process includes dividing a block of transform coefficients into a plurality of zones, determining a scan order for each of the plurality of zones, and performing a scan on each of the transform coefficients in each of the plurality of zones according to their respective determined scan order. In another example, a method for decoding transform coefficients in a video encoding process includes receiving a one-dimensional array of transform coefficients, determining a scan order for each of a plurality of sections of the one-dimensional array, wherein each section of the one-dimensional array corresponds to one of a plurality of zones defining a block of transform coefficients, and performing a scan on each of the transform coefficients in each of the section of the one dimensional array of zones according to their respective determined scan order.

No. of Pages : 47 No. of Claims : 38

(12) PATENT APPLICATION PUBLICATION
(19) INDIA
(22) Date of filing of Application :23/12/2013
(21) Application No.2417/MUMNP/2013 A
(43) Publication Date : 07/11/2014

(54) Title of the invention : ANTI AXL ANTIBODIES AND USES THEREOF

(51) International classification :A61K39/395,C07K16/28
(31) Priority Document No :11305792.1
(32) Priority Date :22/06/2011
(33) Name of priority country :EPO
(86) International Application No :PCT/EP2012/062115
Filing Date :22/06/2012
(87) International Publication No :WO 2012/175692
(61) Patent of Addition to Application Number :NA
Filing Date :NA
(62) Divisional to Application Number :NA
Filing Date :NA

(71)**Name of Applicant :**
1)INSERM (Institut National de la Sant et de la Recherche Mdicale)
Address of Applicant :101 rue de Tolbiac F 75013 Paris France
2)OriBase Pharma
3)UNIVERSITE DE MONTPELLIER 1
4)INSTITUT REGIONAL DU CANCER DE MONTPELLIER VAL DAURELLE
(72)**Name of Inventor :**
1)ROBERT Bruno
2)FAUVEL Bndicte
3)CHEVE Gwna«l
4)YASRI Aziz
5)LARBOURET Christel
6)LECONET Wilhem
7)CHARDES Thierry
8)LARROQUE Christian
9)PELEGRIN Andr

(57) Abstract :
The present invention relates to anti Axl antibodies and uses thereof in diagnostic and therapeutic methods. More particularly the present invention relates to a monoclonal antibody having specificity for Axl comprising an heavy chain variable region comprising SEQ ID NO:2 in the H CDR1 region SEQ ID NO:3 in the H CDR2 region and SEQ ID NO:4 in the H CDR3 region; and a light chain variable region comprising SEQ ID NO: 6 in the L CDR1 region SEQ ID NO:7 in the L CDR2 region and SEQ ID NO:8 in the L CDR3 region. Said monoclonal antibody binds to the extracellular domain of Axl via SEQ ID NO:9 and SEQ ID NO: 10.

No. of Pages : 55 No. of Claims : 18

(12) PATENT APPLICATION PUBLICATION
(19) INDIA
(22) Date of filing of Application :29/11/2013
(21) Application No.2242/MUMNP/2013 A
(43) Publication Date : 07/11/2014

(54) Title of the invention : SURFACE TREATMENT METHOD OF CATHODE ACTIVE MATERIAL AND CATHODE ACTIVE MATERIAL FORMED THEREFROM

(51) International classification	:H01M4/139,H01M10/052,H01M4/48
(31) Priority Document No	:10-2011-0042034
(32) Priority Date	:03/05/2011
(33) Name of priority country	:Republic of Korea
(86) International Application No	:PCT/KR2012/003502
Filing Date	:03/05/2012
(87) International Publication No	:WO 2012/150837
(61) Patent of Addition to Application Number	:NA
Filing Date	:NA
(62) Divisional to Application Number	:NA
Filing Date	:NA

(71)**Name of Applicant :**
1)LG CHEM LTD.
Address of Applicant :128 Yeoui daero Youngdungpo gu Seoul 150 721 Republic of Korea.
(72)**Name of Inventor :**
1)KANG Sung Joong
2)PARK Hong Kyu
3)JIN Joo Hong
4)LEE Dae Jin

(57) Abstract :
The surface processing method for anode active material particles according to the present invention comprises the steps of: (a) preparing an anode active material for a lithium rechargeable battery; (b) creating a plasma by using a gaseous material comprising at least one of a gas having fluorine (F) and a gas containing phosphorous (P) as at least part of a reaction gas; and (c) using the plasma to remove lithium impurities present on the surfaces of the particles constituting the anode active material. By reducing the amount of lithium impurities present on the surfaces of the anode active material particles the present invention makes it possible to suppress secondary reactions with the electrolytic solution.

No. of Pages : 17 No. of Claims : 15

(12) PATENT APPLICATION PUBLICATION
(19) INDIA
(22) Date of filing of Application :09/12/2013
(21) Application No.2315/MUMNP/2013 A
(43) Publication Date : 07/11/2014

(54) Title of the invention : TRACKING LOOP DESIGN FOR UNICAST AND MULTICAST/BROADCAST SIGNALS

(51) International classification :H04L27/26,H04L12/18
(31) Priority Document No :61/495587
(32) Priority Date :10/06/2011
(33) Name of priority country :U.S.A.
(86) International Application No :PCT/US2012/040802
Filing Date :04/06/2012
(87) International Publication No :WO 2012/170365
(61) Patent of Addition to Application Number :NA
Filing Date :NA
(62) Divisional to Application Number :NA
Filing Date :NA

(71)**Name of Applicant :**
1)QUALCOMM INCORPORATED
Address of Applicant :Attn: International IP Administration 5775 Morehouse Drive San Diego CA 92121 1714 U.S.A.
(72)**Name of Inventor :**
1)ZHANG Xiaoxia
2)WALKER Gordon Kent
3)WANG Jun
4)ZHENGWEI Liu

(57) Abstract :
A method an apparatus and a computer program product for wireless communication are provided. In a first configuration the apparatus maintains a first set of tracking loops associated with unicast signals and a second set of tracking loops associated with multicast/broadcast signals. In addition the apparatus decoding at least one of a received unicast signal based on the first set of tracking loops or a received multicast/broadcast signal based on the second set of tracking loops. In a second configuration the apparatus maintains a TTL and a FTL associated with unicast signals based only on received unicast signals. In addition the apparatus receives a multicast/broadcast signal and decodes the received multicast/broadcast signal based on the TTL and the FTL maintained based only on the received unicast signals.

No. of Pages : 65 No. of Claims : 62

(12) PATENT APPLICATION PUBLICATION
(19) INDIA
(22) Date of filing of Application :12/12/2013
(21) Application No.2333/MUMNP/2013 A
(43) Publication Date : 07/11/2014

(54) Title of the invention : SYSTEM FOR CONCENTRATING INDUSTRIAL PRODUCTS AND BY PRODUCTS

(51) International classification :A23L2/08
(31) Priority Document No :1108198.1
(32) Priority Date :17/05/2011
(33) Name of priority country :U.K.
(86) International Application No :PCT/IB2012/052452
Filing Date :16/05/2012
(87) International Publication No :WO 2012/156923
(61) Patent of Addition to Application Number :NA
Filing Date :NA
(62) Divisional to Application Number :NA
Filing Date :NA

(71)**Name of Applicant :**
1)MICROSPHERE
Address of Applicant :Aluf David 20 Ramat Gan 52226 Ramat Gan Israel
(72)**Name of Inventor :**
1)YAAKOBY Shaul

(57) Abstract :
A system for the enrichment of at least one component in a source liquid containing at least two components intermixed the system comprising: a tower of superimposed subunits the uppermost subunit being a vapor chamber; an intermediate subunit functioning as a heating chamber; and a lowest subunit functioning as a sedimentation chamber; a wall partially separating the vapor chamber from the heating chamber; at least one heating unit; at least one shutter at the bottom of the intermediate subunit disposed above the sedimentation chamber to facilitate release of sediments into the sedimentation chamber; an intermediate storage container for storing liquid at equilibrium pressure with the atmosphere; an inlet for refilling the intermediate subunit by pumping; and an outlet for releasing processed liquid from the uppermost vapor chamber to an external container.

No. of Pages : 22 No. of Claims : 8

(12) PATENT APPLICATION PUBLICATION
(19) INDIA
(22) Date of filing of Application :18/12/2013
(21) Application No.2400/MUMNP/2013 A
(43) Publication Date : 07/11/2014

(54) Title of the invention : TRANSMITTER DEVICE RECEIVER DEVICE TRANSMISSION METHOD AND RECEPTION METHOD

(51) International classification :H04W72/04,H04J11/00
(31) Priority Document No :2011-141683
(32) Priority Date :27/06/2011
(33) Name of priority country :Japan
(86) International Application No :PCT/JP2012/003866
Filing Date :13/06/2012
(87) International Publication No :WO 2013/001733
(61) Patent of Addition to Application Number :NA
Filing Date :NA
(62) Divisional to Application Number :NA
Filing Date :NA

(71)**Name of Applicant :**
1)PANASONIC INTELLECTUAL PROPERTY CORPORATION OF AMERICA
Address of Applicant :20000 MARINER AVENUE, SUITE 200, TORRANCE CA 90503, USA.
(72)**Name of Inventor :**
1)HORIUCHI Ayako
2)IMAMURA Daichi

(57) Abstract :
The objective of the present invention is to provide a transmitter device that is capable of preventing error detection of a data resource area as a result of a detection mistake of a control signal. In the device a control unit (101) sets as data resource areas only PRBs that have been imparted with numbers greater than a number that has been imparted to a PRB for which has been set a control resource area for which a downlink assignment control signal (that is a DL grant) has been mapped. In this manner at a terminal (200) if the PRB for which a downlink assignment control signal has been detected can be identified the data resource area can be identified directly and therefore it is possible to prevent error detection for the data resource area as a result of a detection mistake of an uplink assignment control signal.

No. of Pages : 60 No. of Claims : 20

(12) PATENT APPLICATION PUBLICATION
(19) INDIA
(22) Date of filing of Application :19/03/2013
(21) Application No.1173/CHE/2013 A
(43) Publication Date : 07/11/2014

(54) Title of the invention : COMPRESSOR

(51) International classification :F04B
(31) Priority Document No :2012-067753
(32) Priority Date :23/03/2012
(33) Name of priority country :Japan
(86) International Application No :NA
Filing Date :NA
(87) International Publication No : NA
(61) Patent of Addition to Application Number :NA
Filing Date :NA
(62) Divisional to Application Number :NA
Filing Date :NA

(71)**Name of Applicant :**
1)KABUSHIKI KAISHA TOYOTA JIDOSHOKKI
Address of Applicant :2-1, TOYODA-CHO, KARIYA-SHI, AICHI-KEN Japan
(72)**Name of Inventor :**
1)OHNO, MASAMI
2)OBAYASHI, MASAKAZU
3)SATO, SHINICHI
4)SAIKI, AKIO
5)NAKASHIMA, AKIHIRO

(57) Abstract :
A compressor includes a housing, compression unit, discharge chamber, outlet, and oil separation structure. The oil separation structure, which is arranged between the discharge chamber and the outlet, includes an oil reservoir, oil separation compartment, intake passage, exhaust passage, and supply passage. The oil separation compartment is located upward from the oil reservoir. The intake passage, which extends upward from the oil separation compartment, draws refrigerant gas into the oil separation compartment from the discharge chamber to separate lubrication oil from the refrigerant gas. The exhaust passage extends upward from the oil separation compartment and discharges the refrigerant gas in the oil separation compartment out of the housing through the outlet. The supply passage extends upward from the oil separation compartment and has a larger cross-sectional area than the intake passage. The supply passage supplies the oil reservoir with lubrication oil from the oil separation compartment.

No. of Pages : 41 No. of Claims : 11

(12) PATENT APPLICATION PUBLICATION
(19) INDIA
(22) Date of filing of Application :19/03/2013
(21) Application No.1175/CHE/2013 A
(43) Publication Date : 07/11/2014

(54) Title of the invention : MECHANISM FOR DISPLAYING AND CORRECTING THE STATE OF TWO DIFFERENT TIME MEASURABLE QUANTITIES

(51) International classification :G04B
(31) Priority Document No :12160931.7
(32) Priority Date :23/03/2012
(33) Name of priority country :EPO
(86) International Application No :NA
Filing Date :NA
(87) International Publication No : NA
(61) Patent of Addition to Application Number :NA
Filing Date :NA
(62) Divisional to Application Number :NA
Filing Date :NA

(71)**Name of Applicant :**
1)OMEGA S.A.
Address of Applicant :RUE STAMPFLI 96, 2500 BIEL/BIENNE 4 Switzerland
(72)**Name of Inventor :**
1)VILLAR, IVAN

(57) Abstract :
Mechanism for displaying and correcting the state of two different time measurable Quantities Mechanism (1) for displaying and correcting the state of two different time measurable quantities for a timepiece (1000) including a movement (2) driving a first display mechanism (3) a first measurable time quantity and a second display mechanism (4) a second measurable time quantity and including an adjusting member (50). Said first (3) and second (4) display mechanisms respectively include a first (30) and a second (40) drive mechanisms sharing a common drive mechanism (10) driven by said movement (2), and controlling the driving of one of said display mechanisms (4; 3) by instantaneous jumps and of the other (3; 4) by dragging. The display mechanisms respectively include a first (300) and a second (400) correction mechanism, sharing a common correction mechanism (100) driven by said adjusting member (50) independent of said common drive mechanism (10), including a friction safety device (54).

No. of Pages : 29 No. of Claims : 7

(12) PATENT APPLICATION PUBLICATION
(19) INDIA
(22) Date of filing of Application :25/03/2013
(21) Application No.1281/CHE/2013 A
(43) Publication Date : 07/11/2014

(54) Title of the invention : FUEL INJECTION CONTROL DEVICE OF INTERNAL COMBUSTION ENGINE

(51) International classification :F01N
(31) Priority Document No :2012-080062
(32) Priority Date :30/03/2012
(33) Name of priority country :Japan
(86) International Application No :NA
Filing Date :NA
(87) International Publication No : NA
(61) Patent of Addition to Application Number :NA
Filing Date :NA
(62) Divisional to Application Number :NA
Filing Date :NA

(71)**Name of Applicant :**
1)HONDA MOTOR CO., LTD.
Address of Applicant :1-1, MINAMI-AOYAMA 2-CHOME, MINATO-KU, TOKYO, 107-8556 Japan
(72)**Name of Inventor :**
1)YOGO, TOYOYUKI
2)KUBO, KENTARO

(57) Abstract :
To provide a fuel injection control device of an internal combustion engine, which can optimize increase injection in restarting the internal combustion engine after idling stop based on activation of an O2 sensor to lower fuel consumption. [Solution] This fuel injection control device of the internal combustion engine includes: restart O2 sensor temperature estimating means (53) for estimating a restart O2 sensor temperature (Y) which is an element temperature of the O2 sensor (61) in restarting the internal combustion engine after idling stop from operating state immediately before IS, which is an operating state of the internal combustion engine immediately before entering the idling stop and idling stop elapsed time (xe) of an idling stop region (Re); and increase injection time setting means (54) for setting fuel-increased injection time (Tr) based on the restart O2 sensor temperature (Y) estimated by the restart O2 sensor temperature estimating means (53), wherein the fuel injection control device open-controls the fuel injection device (60) for the fuel-increased injection time (Tr) set by the increase injection time setting means (54) from the restart time of the internal combustion engine.

No. of Pages : 38 No. of Claims : 6

(12) PATENT APPLICATION PUBLICATION
(19) INDIA
(22) Date of filing of Application :11/02/2013
(21) Application No.1099/CHENP/2013 A
(43) Publication Date : 07/11/2014

(54) Title of the invention : IMAGE CODING METHOD IMAGE DECODING METHOD MEMORY MANAGING METHOD IMAGE CODING APPARATUS IMAGE DECODING APPARATUS MEMORY MANAGING APPARATUS AND IMAGE CODING AND DECODING APPARATUS

(51) International classification :H04N7/26
(31) Priority Document No :61/432683
(32) Priority Date :14/01/2011
(33) Name of priority country :U.S.A.
(86) International Application No :PCT/JP2012/000161
Filing Date :12/01/2012
(87) International Publication No :WO 2012/096186
(61) Patent of Addition to Application Number :NA
Filing Date :NA
(62) Divisional to Application Number :NA
Filing Date :NA

(71)**Name of Applicant :**
1)PANASONIC CORPORATION
Address of Applicant :1006 Oaza Kadoma Kadoma shi Osaka 5718501 Japan
(72)**Name of Inventor :**
1)NISHI Takahiro
2)SHIBAHARA Youji
3)SASAI Hisao
4)SUGIO Toshiyasu

(57) Abstract :
In an image encoding method enabling the reduction of processing load when a plurality of pictures contained in a dynamic image signal are layered and classified so that each picture is associated with a layer among a plurality of layers a picture associated with the second layer which is in a region delimited according to the first layer to which one picture to be encoded from among the plurality of pictures belongs is referenced as a reference picture for the picture to be encoded (S10) and the picture to be encoded is encoded on the basis of the reference picture (S11).

No. of Pages : 111 No. of Claims : 22

(12) PATENT APPLICATION PUBLICATION
(19) INDIA
(22) Date of filing of Application :14/02/2014
(21) Application No.1190/CHENP/2014 A
(43) Publication Date : 07/11/2014

(54) Title of the invention : METHOD OF FORMING DEEP DRAWN PAINT FILM LAMINATED SHEET METAL AND ARTICLES MADE THEREFROM

(51) International classification :B32B38/12,B21D22/00,B21D22/20
(31) Priority Document No :61/525568
(32) Priority Date :19/08/2011
(33) Name of priority country :U.S.A.
(86) International Application No :PCT/US2012/050845
Filing Date :15/08/2012
(87) International Publication No :WO 2013/028420
(61) Patent of Addition to Application Number :NA
Filing Date :NA
(62) Divisional to Application Number :NA
Filing Date :NA

(71)**Name of Applicant :**
1)3M INNOVATIVE PROPERTIES COMPANY
Address of Applicant :3M Center Post Office Box 33427 Saint Paul Minnesota 55133 3427 U.S.A.
2)MCMASTER UNIVERSITY
(72)**Name of Inventor :**
1)NIELSEN Kent E.
2)JAIN Mukesh K.
3)ELNAGMI Mohamed
4)BRUHIS Moisei

(57) Abstract :
A method for painting a complex or compound curved three dimensional surface of a portion of an article. The method comprises providing a paint film (24); providing sheet metal (26) having opposite major surfaces; laminating the paint film onto a major surface of the sheet metal to form a painted sheet metal laminate (22) comprising a first portion and a second portion; permanently deforming the first portion of the painted sheet metal laminate into a formed portion of the article having a complex or compound curved three dimensional shape; applying an initial force for securing the second portion of the painted sheet metal laminate during an initial stage of said permanently deforming step; and applying a later force for securing the second portion of the painted sheet metal laminate during a later stage of said permanently deforming step. The later applied force is greater than the initially applied force.

No. of Pages : 24 No. of Claims : 16

(12) PATENT APPLICATION PUBLICATION
(19) INDIA
(22) Date of filing of Application :21/03/2013
(21) Application No.1241/CHE/2013 A
(43) Publication Date : 07/11/2014

(54) Title of the invention : LUBRICATION SYSTEM IN POWER TRANSMISSION MECHANISM

(51) International classification :e01c
(31) Priority Document No :2012-065927
(32) Priority Date :22/03/2012
(33) Name of priority country :Japan
(86) International Application No :NA
Filing Date :NA
(87) International Publication No : NA
(61) Patent of Addition to Application Number :NA
Filing Date :NA
(62) Divisional to Application Number :NA
Filing Date :NA

(71)**Name of Applicant :**
1)HONDA MOTOR CO., LTD.
Address of Applicant :1-1, MINAMI-AOYAMA 2-CHOME, MINATO-KU, TOKYO, 107-8556 Japan
(72)**Name of Inventor :**
1)SHIMAZAKI, ITSUKI
2)MOGI, SEIICHI
3)KAWAI, NORIKAZU
4)MATSUI, HIROKI

(57) Abstract :
A baffle plate 20 has a baffle plate main body portion 21 that has an arc-like shape as seen in the direction of a rotational axis of a gear G and which extends in the direction of the rotational axis, a tube portion 22 that has an oil suction port 22c in a side thereof which faces a bottom surface of a transmission case 11 and which extends towards a circulation path opening portion 14 in the direction of the rotational axis and a surface portion 23 that connects the baffle plate main body 21 with the tube portion 22 and which extends in the direction of the rotational axis. The tube portion 22 is inserted into the circulation path opening portion 14.

No. of Pages : 28 No. of Claims : 5

(12) PATENT APPLICATION PUBLICATION
(19) INDIA
(22) Date of filing of Application :22/02/2013
(21) Application No.1463/CHENP/2013 A
(43) Publication Date : 07/11/2014

(54) Title of the invention : SALTS OF LAKED MONOAZO COMPOUNDS

(51) International classification :C09B
(31) Priority Document No :04101752.6
(32) Priority Date :27/04/2004
(33) Name of priority country :EPO
(86) International Application No :PCT/EP2005/51686
Filing Date :18/04/2005
(87) International Publication No :WO/2005/103164
(61) Patent of Addition to Application Number :NA
Filing Date :NA
(62) Divisional to Application Number :4350/CHENP/2006
Filed on :18/04/2005

(71)**Name of Applicant :**
1)CIBA HOLDING INC.
Address of Applicant :KLYBECKSTRASSE 141, CH-4057 BASEL Switzerland
(72)**Name of Inventor :**
1)FOLLY, GREGOIRE
2)LUTERBACHER, URSULA
3)RUCH, THOMAS

(57) Abstract :
The present invention relates to monoazo compounds of formula which are present in the form of mono-, di-, tri- or tetra-valent mixed salt of different cations, such as, for example, Ca2+, Na+, NH4+, NR/, H+, Li+, K+, Mg2+, Ba2+, Al3+, Mn2+, Zn2+, Cr2+, Fe2+, Fe3+ and Cu2+ R being CrC6alkyl, in freely selected ratios, and to the calcium salt of the monoazo compound of formula (1) which has two crystal polymorph forms - a reddish yellow and a greenish yellow - having different properties, for example colour shade or high-temperature stability, to the preparation of such compounds and to their use in the mass-pigmenting of organic materials and in the production of wax transfer ribbons, toners or colour filters.

No. of Pages : 18 No. of Claims : 8

(12) PATENT APPLICATION PUBLICATION
(19) INDIA
(22) Date of filing of Application :14/03/2013
(21) Application No.1085/CHE/2013 A
(43) Publication Date : 07/11/2014

(54) Title of the invention : TRIP UNIT FOR AN ELECTRIC PROTECTION APPARATUS AND ELEVTRIC PROTECTION APPARATUS COMPRISING ONE SUCH UNIT

(51) International classification :H02H
(31) Priority Document No :12 00816
(32) Priority Date :19/03/2012
(33) Name of priority country :France
(86) International Application No :NA
Filing Date :NA
(87) International Publication No : NA
(61) Patent of Addition to Application Number :NA
Filing Date :NA
(62) Divisional to Application Number :NA
Filing Date :NA

(71)**Name of Applicant :**
1)SCHNEIDER ELECTRIC INDUSTRIES SAS
Address of Applicant :35, RUE JOSEPH MONIER, F-92500 RUEIL MALMAISON France
(72)**Name of Inventor :**
1)CAMBON, FABIEN
2)BELIN, YVES

(57) Abstract :
The present invention relates to a trip unit B intended to be linked to an electric protection apparatus, said unit B comprising a mechanism comprising trip means (8) for transmitting a trip order to said electric protection apparatus following a manual opening action or the occurrence of a short circuit in the electric circuit protected by said apparatus, said unit comprising means for signalling (i) the tripped state upon short circuit of said apparatus, and means of reinitializing (12, 14, 25,18) said signalling means. This trip unit B is characterized in that the aforementioned reinitialization means (12, 14, 25, 18) are controlled by the reclosing of the electric protection apparatus after an opening following a short circuit.

No. of Pages : 23 No. of Claims : 13

(12) PATENT APPLICATION PUBLICATION
(19) INDIA
(22) Date of filing of Application :21/03/2013
(21) Application No.1243/CHE/2013 A
(43) Publication Date : 07/11/2014

(54) Title of the invention : HEAT EXCHANGER FOR TRACTION CONVERTERS

(51) International classification :F25B
(31) Priority Document No :12161699.9
(32) Priority Date :28/03/2012
(33) Name of priority country :EPO
(86) International Application No :NA
Filing Date :NA
(87) International Publication No : NA
(61) Patent of Addition to Application Number :NA
Filing Date :NA
(62) Divisional to Application Number :NA
Filing Date :NA

(71)**Name of Applicant :**
1)ABB RESEARCH LTD.
Address of Applicant :AFFOLTERNSTRASSE 44, CH-8050 ZURICH Switzerland
(72)**Name of Inventor :**
1)GRADINGER, THOMAS
2)AGOSTINI, BRUNO
3)MERK, MARCEL

(57) Abstract :
This application concerns a heat exchanger (1), comprising a first heat exchanger module (10) with a first evaporator channel (120) and a first condenser channel (130). The first evaporator channel (120) and the first condenser channel (130) are arranged in a first conduit (11). The first evaporator channel (120) and the first condenser channel (130) are fluidly connected to one another by a first upper distribution manifold (30) and a first lower distribution manifold (33) such that the first evaporator channel (120) and the first condenser channel (130) form a first loop for a working fluid. The first heat exchanger module (10) comprises a first evaporator heat transfer element (28) for transferring heat into the first evaporator channel (120); and a first condenser heat transfer element (29) for transferring heat out of the first condenser channel (130). The heat exchanger (1) also comprises a second heat exchanger module (210) coupled to the first heat exchanger module (10) by a fluid connection element for an exchange of the working fluid between the first heat exchanger module (10) and second heat exchanger module (210).

No. of Pages : 38 No. of Claims : 15

(12) PATENT APPLICATION PUBLICATION
(19) INDIA
(22) Date of filing of Application :27/03/2013
(21) Application No.1354/CHE/2013 A
(43) Publication Date : 07/11/2014

(54) Title of the invention : A SYSTEM FOR DOSAGE OF SUBSTANCES

(51) International classification :A61M
(31) Priority Document No :NA
(32) Priority Date :NA
(33) Name of priority country :NA
(86) International Application No :NA
Filing Date :NA
(87) International Publication No : NA
(61) Patent of Addition to Application Number :NA
Filing Date :NA
(62) Divisional to Application Number :NA
Filing Date :NA

(71)**Name of Applicant :**
1)V.S Raghunathan
Address of Applicant :No.-3A, Rupa Appartments, No. 6 Rajan Street, T-Nagar, Chennai-600017, India Tamil Nadu India
(72)**Name of Inventor :**
1)V.S Raghunathan

(57) Abstract :
A system for dosage of substances includes an outer barrel configured to store a first substance and an inner barrel configured to store a second substance. The system further includes a gasket configured to selectively seal or allow a passage of substance between said inner barrel and said outer barrel. The said inner barrel and the gasket include at least one aperture that is configured to provide passage of substance between the inner barrel and the outer barrel.

No. of Pages : 21 No. of Claims : 10

(12) PATENT APPLICATION PUBLICATION
(19) INDIA
(22) Date of filing of Application :22/02/2013
(21) Application No.1466/CHENP/2013 A
(43) Publication Date : 07/11/2014

(54) Title of the invention : ALKALINE FEED

(51) International classification :C12N1/20
(31) Priority Document No :10008997.8
(32) Priority Date :30/08/2010
(33) Name of priority country :EPO
(86) International Application No :PCT/EP2011/064598
Filing Date :25/08/2011
(87) International Publication No :WO 2012/028522
(61) Patent of Addition to Application Number :NA
Filing Date :NA
(62) Divisional to Application Number :NA
Filing Date :NA

(71)**Name of Applicant :**
1)F. HOFFMANN LA ROCHE AG
Address of Applicant :Grenzacher Strasse 124 CH 4070 Basel Switzerland
(72)**Name of Inventor :**
1)SCHANTZ Christian

(57) Abstract :
Herein is reported a method for cultivating a bacterial cell comprising the addition of an amino acid in an alkaline solution used for pH regulation. Also an aspect is a method for producing a polypeptide comprising the steps of a) providing a bacterial cell comprising a nucleic acid encoding the polypeptide b) cultivating the provided cell c) adjusting the pH value during the cultivating with a basic solution comprising an amino acid d) recovering the polypeptide from the cell or the cultivation medium and thereby producing the polypeptide.

No. of Pages : 72 No. of Claims : 15

(12) PATENT APPLICATION PUBLICATION
(19) INDIA
(22) Date of filing of Application :11/02/2013
(21) Application No.1100/CHENP/2013 A
(43) Publication Date : 07/11/2014

(54) Title of the invention : CHLORINE DIOXIDE TREATMENT OF BIOMASS FEEDSTOCK

(51) International classification :C08B1/00
(31) Priority Document No :12/854758
(32) Priority Date :11/08/2010
(33) Name of priority country :U.S.A.
(86) International Application No :PCT/US2011/047452
Filing Date :11/08/2011
(87) International Publication No :WO 2012/021725
(61) Patent of Addition to Application Number :NA
Filing Date :NA
(62) Divisional to Application Number :NA
Filing Date :NA

(71)**Name of Applicant :**
1)GEORGIA TECH RESEARCH CORPORATION
Address of Applicant :Georgia Institute of Technology 505 Tenth Street NW Atlanta GA 30332 0415 U.S.A.
2)CHEVRON U.S.A. INC
(72)**Name of Inventor :**
1)SANNIGRAHI Poulomi
2)RASGAUSKAS Arthur J.
3)MILLER Stephen J.

(57) Abstract :
The instant invention pertains to the use of chlorine dioxide in new processes for treating lignocellulosic feedstocks as well as new compositions suitable for for example bioalcohol production. Advantageously the processes and compositions of the present invention may be used in more environmentally friendly cost efficient production of fuels and. if desired may be coupled with other biomass processing facilities such as Kraft pulp bleaching mills.

No. of Pages : 18 No. of Claims : 20

(12) PATENT APPLICATION PUBLICATION
(19) INDIA
(22) Date of filing of Application :20/03/2013
(21) Application No.1195/CHE/2013 A
(43) Publication Date : 07/11/2014

(54) Title of the invention : NDT INSPECTION FOR RAIL USING GUIDE WAVE HOMC

(51) International classification :G01N
(31) Priority Document No :NA
(32) Priority Date :NA
(33) Name of priority country :NA
(86) International Application No :NA
Filing Date :NA
(87) International Publication No : NA
(61) Patent of Addition to Application Number :NA
Filing Date :NA
(62) Divisional to Application Number :NA
Filing Date :NA

(71)**Name of Applicant :**
1)DR. KRISHNAN BALASUBRAMANIAM
Address of Applicant :01J, 1ST FLOOR, IITM RESEARCH PARK, KANAGAM ROAD, TARAMANI, CHENNAI - 600 113 Tamil Nadu India
2)R. SIVAKUMAR
(72)**Name of Inventor :**
1)DR. KRISHNAN BALASUBRAMANIAM
2)R. SIVAKUMAR

(57) Abstract :
NDT inspection for rail using guide wave HOMC method can be used to find the hidden defects in rail, in the regions that are hidden by the liner seat and clips, in the feet region of the rails. The novelty of this technique is that it involves the use of higher order modes that have smaller wavelengths and hence improved resolution to detect smaller defects. The difficulties previously encountered with multiple modes are resolved here by selecting a region in the dispersion curve where all the modes converge to the same velocity and are non-dispersive. This selection allows the employment of higher order modes without the difficulties of multiple modes travelling at different velocities and hence dispersion in the modes. There is no report of any previous use of this region for RAIL inspection, and hence constitutes a novel technique that is useful for medium range inspection applications with higher resolution of defect detection compared to the conventional guided wave techniques. Both the group and the phase velocities of all modes are similar and hence improve the time resolution for defect location and velocity measurement for NDT/E and measurement applications. The frequency bandwidth region of the generation and reception of this Higher Order Modes Cluster Guided Wave Technique (HOMC-GW) is limited to the region between the dispersive behaviour of the modes and the degeneration of these modes into the shear mode

No. of Pages : 12 No. of Claims : 10

(12) PATENT APPLICATION PUBLICATION
(19) INDIA
(22) Date of filing of Application :22/02/2013
(21) Application No.1467/CHENP/2013 A
(43) Publication Date : 07/11/2014

(54) Title of the invention : ANTI VIRAL AZIDE CONTAINING COMPOUNDS

(51) International classification :A61K31/00
(31) Priority Document No :61/368565
(32) Priority Date :28/07/2010
(33) Name of priority country :U.S.A.
(86) International Application No :PCT/US2011/045731
Filing Date :28/07/2011
(87) International Publication No :WO 2012/016048
(61) Patent of Addition to Application Number :NA
Filing Date :NA
(62) Divisional to Application Number :NA
Filing Date :NA

(71)**Name of Applicant :**
1)LIFE TECHNOLOGIES CORPORATION
Address of Applicant :5791 Van Allen Way Carlsbad CA 92008 U.S.A.
(72)**Name of Inventor :**
1)AGNEW Brian
2)GRAHAM David
3)SINGH Upinder
4)GRECIAN Scott

(57) Abstract :
Methods of using azide modified biomolecules such as fatty acids carbohydrates and lipids to treat a plant an insect or an animal infected with a virus or to inhibit infectivity of a virus such as the human immunodeficiency virus are provided. Also provided are methods of labeling a virus such as human immunodeficiency virus with an azide modified biomolecule such as a fatty acid a carbohydrate or an isoprenoid lipid. Also provided are methods of tracking a virus with an azide modified biomolecule such as a fatty acid a carbohydrate or an isoprenoid lipid. The azide modified biomolecules may be combined with a pharmaceutically acceptable excipient to produce a pharmaceutical composition optionally containing another anti viral agent and/or a delivery agent such as a liposome.

No. of Pages : 55 No. of Claims : 31

(12) PATENT APPLICATION PUBLICATION
(19) INDIA
(22) Date of filing of Application :22/02/2013
(21) Application No.1468/CHENP/2013 A
(43) Publication Date : 07/11/2014

(54) Title of the invention : APPARATUS FOR MELT SPINNING DRAWING AND WINDING UP A PLURALITY OF MULTIFILAMENT THREADS

(51) International classification :D01D5/096,D01D13/02
(31) Priority Document No :10 2010 032 529.5
(32) Priority Date :28/07/2010
(33) Name of priority country :Germany
(86) International Application No :PCT/EP2011/055709
Filing Date :12/04/2011
(87) International Publication No :WO 2012/013367
(61) Patent of Addition to Application Number :NA
Filing Date :NA
(62) Divisional to Application Number :NA
Filing Date :NA

(71)**Name of Applicant :**
1)OERLIKON TEXTILE GMBH & CO. KG
Address of Applicant :Leverkuser Strasse 65 42897 Remscheid Germany
(72)**Name of Inventor :**
1)MEISE Hansjrg
2)SCHULZ Detlev
3)WEIGEND Helmut
4)ADLER Jochen

(57) Abstract :
The invention relates to an apparatus for melt spinning drawing and winding up a multifilament thread having a spinning device a drawing device a spooling device and a preparation device which is formed by two separate preparation stations. The preparation stations are arranged upstream and downstream of the drawing device in the thread run wherein according to the invention at least one of the preparation stations is designed to be controllable and/or switchable for setting a thread wetting. It is therefore possible to wet the threads in a manner which is always adapted to the respective operating states.

No. of Pages : 21 No. of Claims : 8

(12) PATENT APPLICATION PUBLICATION
(19) INDIA
(22) Date of filing of Application :25/03/2013
(21) Application No.1279/CHE/2013 A
(43) Publication Date : 07/11/2014

(54) Title of the invention : FUEL INJECTION CONTROL SYSTEM OF INTERNAL COMBUSTION ENGINE

(51) International classification :F02D
(31) Priority Document No :2012-080976
(32) Priority Date :30/03/2012
(33) Name of priority country :Japan
(86) International Application No :NA
Filing Date :NA
(87) International Publication No : NA
(61) Patent of Addition to Application Number :NA
Filing Date :NA
(62) Divisional to Application Number :NA
Filing Date :NA

(71)**Name of Applicant :**
1)HONDA MOTOR CO., LTD.
Address of Applicant :1-1, MINAMI-AOYAMA 2-CHOME, MINATO-KU, TOKYO, 107-8556 Japan
(72)**Name of Inventor :**
1)UTSUGI, KATSUHIRO
2)IBATA, RYOSUKE
3)KOMURO, KATSUNORI
4)AKAMATSU, SHUNJI

(57) Abstract :
To provide a fuel injection control system of an internal combustion engine which is capable of performing relearning of the amount of correction required for leaning operation at proper timing. [Constitution] A control unit C defines a part of predetermined ranges A3, A4 (hereinafter called A3, A4) of the feedback ranges A1-A6 with the exclusion of at least an idling range Al (hereinafter called Al) , as a leaning range (L) . Upon entry of an operating condition into the leaning range L after the completion of learning of environment correction coefficients KBU3, KBU4 (hereinafter called KBU3, KBU4) for A3, A4, the control unit C executes a leaning operation under open control suitably using a lean air-fuel ratio leaner than a theoretical air-fuel ratio without consideration given to an output signal of an 02 sensor 32. When a predetermined threshold Z is exceeded by a difference between KBU1 in Al at the time of shifting to the leaning operation and new KBU1 calculated from a mean value K02ave of a feedback correction coefficient K02 in Al after sifting to the leaning operation, the control unit C terminates the leaning operation and relearns KBUsl, 3, 4

No. of Pages : 62 No. of Claims : 6

(12) PATENT APPLICATION PUBLICATION
(19) INDIA
(22) Date of filing of Application :28/03/2013
(21) Application No.1387/CHE/2013 A
(43) Publication Date : 07/11/2014

(54) Title of the invention : METHOD AND SYSTEM FOR HANDING OVER MULTIPLE RECOVERED CLOCK SIGNALS

(51) International classification :H04j
(31) Priority Document No :NA
(32) Priority Date :NA
(33) Name of priority country :NA
(86) International Application No :NA
Filing Date :NA
(87) International Publication No : NA
(61) Patent of Addition to Application Number :NA
Filing Date :NA
(62) Divisional to Application Number :NA
Filing Date :NA

(71)**Name of Applicant :**
1)TEJAS NETWORKS LIMITED
Address of Applicant :PLOT NO. 25, JP SOFTWARE PARK, ELECTRONICS CITY, PHASE-1, HOSUR ROAD, BANGALORE - 560 100 Karnataka India
(72)**Name of Inventor :**
1)DHIRAJ KIRAN
2)KRISHNA KISHOR
3)SHRIKANT SHEDGE

(57) Abstract :
The various embodiments of the present invention provide a method for providing handover of network recovered clocks in a multi-card synchronized system. The dividing a plurality of recovered clocks on a line card into one or more rate converted recovered clocks, time-division multiplexing the rate converted recovered clocks into a single pin andde-multiplexing of the rate converted recovered clocks in the timing card using the high frequency timing card reference clocLThe time division multiplexing and de-multiplexing of the rate converted recovered clocks are performed using a high frequency timing card reference clock. The plurality of recovered clocks is divided using a preset division factor includinga recovered clock frequency and a preset low frequency clock rate.

No. of Pages : 19 No. of Claims : 8

(12) PATENT APPLICATION PUBLICATION
(19) INDIA
(22) Date of filing of Application :28/03/2013
(21) Application No.1388/CHE/2013 A
(43) Publication Date : 07/11/2014

(54) Title of the invention : METHOD AND SYSTEM FOR PREVENTING COLLISIONS IN CONTENTION BASED NETWORKS

(51) International classification :H04l
(31) Priority Document No :NA
(32) Priority Date :NA
(33) Name of priority country :NA
(86) International Application No :NA
Filing Date :NA
(87) International Publication No : NA
(61) Patent of Addition to Application Number :NA
Filing Date :NA
(62) Divisional to Application Number :NA
Filing Date :NA

(71)**Name of Applicant :**
1)TEJAS NETWORKS LIMITED
Address of Applicant :PLOT NO. 25, JP SOFTWARE PARK, ELECTRONICS CITY, PHASE-1, HOSUR ROAD, BANGALORE - 560 100 Karnataka India
(72)**Name of Inventor :**
1)ROHITH VIJAYAKUMAR HEGDE

(57) Abstract :
The various embodiments of the present invention provide a method and system for preventing collisions in a contention based random access preambles in a communication network. The method comprises of dividing the contention based preambles into a plurality of sub-groups, categorizing a plurality of users into a plurality of sub-groups, scheduling the users within a preamble subgroup in one or more random access channel opportunities and transmitting information on the sub-groups of the preamble and the random access channel opportunities to one or more user equipments. The users within a sub-group are provided access to the set of contention based preambles dispersed in time thereby reducing the number of user equipments colliding on a single random access preamble channel.

No. of Pages : 21 No. of Claims : 6

(12) PATENT APPLICATION PUBLICATION
(19) INDIA
(22) Date of filing of Application :26/02/2014
(21) Application No.1552/CHENP/2014 A
(43) Publication Date : 07/11/2014

(54) Title of the invention : BOTTOM ASPIRATION PURIFICATION SYSTEM

(51) International classification :C25C3/22,B01D46/00,B01D53/00
(31) Priority Document No :201110250021.5
(32) Priority Date :29/08/2011
(33) Name of priority country :China
(86) International Application No :PCT/CN2012/001115
Filing Date :20/08/2012
(87) International Publication No :WO 2013/029335
(61) Patent of Addition to Application Number :NA
Filing Date :NA
(62) Divisional to Application Number :NA
Filing Date :NA

(71)**Name of Applicant :**
1)CHINA ALUMINUM INTERNATIONAL ENGINEERING CORPORATION LIMITED
Address of Applicant :Building C No.99 Xingshikou Road Haidian District Beijing 100093 China
(72)**Name of Inventor :**
1)SONG Haichen
2)ZHANG Guobin
3)WANG Fuqiang
4)LIU Yafeng
5)WANG Lin
6)HU Hongwu

(57) Abstract :
Disclosed is a bottom aspiration purification system formed by the following structure: a dust remover the bottom of which is communicated with a front collection pipe of the dust remover through an air intake pipe of the dust remover; a reactor which is arranged at the air intake pipe of the dust remover; an alumina distributing device which is arranged between the reactor and a fresh alumina storage cabin and communicated with the reactor through a distributing chute; an alumina feeding device which is arranged between the alumina distributing device and the fresh alumina storage cabin; a return feeding tube which is arranged at the lower part of the dust remover. The alumina in the return feeding tube is transferred to a material lifting device through a return chute and then transferred to a fluorinated alumina cabin. The upper part of the dust remover is communicated with an export collection pipe of the dust remover through an export pipe of the dust remover. The export collection pipe of the dust remover is communicated with a chimney through a fan. The system can improve the efficiency and maintenance convenience reduce the energy consumption of the system and increase the stability of the system.

No. of Pages : 15 No. of Claims : 15

(12) PATENT APPLICATION PUBLICATION
(19) INDIA
(22) Date of filing of Application :08/02/2013
(21) Application No.1079/CHENP/2013 A
(43) Publication Date : 07/11/2014

(54) Title of the invention : MU OPIOID RECEPTOR AGONIST ANALOGS OF THE ENDOMORPHINS

(51) International classification :C07K5/12,C07K7/64,A61K38/12
(31) Priority Document No :61/363039
(32) Priority Date :09/07/2010
(33) Name of priority country :U.S.A.
(86) International Application No :PCT/US2011/043306
Filing Date :08/07/2011
(87) International Publication No :WO 2012/006497
(61) Patent of Addition to Application Number :NA
Filing Date :NA
(62) Divisional to Application Number :NA
Filing Date :NA

(71)**Name of Applicant :**
1)THE ADMINISTRATORS OF THE TULANE EDUCATIONAL FUND
Address of Applicant :1430 Tulane Avenue New Orleans Louisiana 70112 U.S.A.
2)UNITED STATES DEPARTMENT OF VETERANS AFFAIRS
(72)**Name of Inventor :**
1)ZADINA James E.
2)HACKLER Laszlo

(57) Abstract :
The invention relates to cyclic peptide agonists that bind to the mu (morphine) opioid receptor and their use in the treatment of acute and/or chronic pain. Embodiments of the invention are directed to cyclic pentapeptide and hexapeptide analogs of endomorphin that have (i) a carboxy terminal extension with an amidated hydrophilic amino acid and (ii) a substitution in amino acid position 2. These peptide analogs exhibit increased solubility compared to similar tetrapeptide analogs while maintaining favorable or improved therapeutic ratios of analgesia to side effects.

No. of Pages : 52 No. of Claims : 27

(12) PATENT APPLICATION PUBLICATION
(19) INDIA
(22) Date of filing of Application :08/01/2013
(21) Application No.117/CHE/2013 A
(43) Publication Date : 07/11/2014

(54) Title of the invention : MEMBER COMPRISING A CERAMIC ELEMENT

(51) International classification :E04F
(31) Priority Document No :12151147.1
(32) Priority Date :13/01/2012
(33) Name of priority country :EPO
(86) International Application No :NA
Filing Date :NA
(87) International Publication No : NA
(61) Patent of Addition to Application Number :NA
Filing Date :NA
(62) Divisional to Application Number :NA
Filing Date :NA

(71)**Name of Applicant :**
1)COMADUR S.A.
Address of Applicant :COL-DES-ROCHES 33, 2400, LE LOCLE Switzerland
(72)**Name of Inventor :**
1)NETUSCHILI, ALEXANDRE

(57) Abstract :
Member comprising a ceramic element The invention relates to a member (1) comprising a ceramic element (3) intended to be fitted against a body (5). According to the invention, the member includes a cooperation device (7) comprising a deformable insert (2) for locking the fit between the ceramic element (3) and the body (5), and a means of adherence (13) between the insert (2) and the ceramic element (3), in order to decrease the relative movement between said ceramic element (3) and said insert (2). The invention concerns the field of external elements for timepieces.

No. of Pages : 9 No. of Claims : 8

(12) PATENT APPLICATION PUBLICATION
(19) INDIA
(22) Date of filing of Application :26/02/2013
(21) Application No.1540/CHENP/2013 A
(43) Publication Date : 07/11/2014

(54) Title of the invention : METHOD OF LASTING AN ARTICLE OF FOOTWEAR

(51) International classification :A43B9/00,A43B9/02,A43B23/02
(31) Priority Document No :12/848352
(32) Priority Date :02/08/2010
(33) Name of priority country :U.S.A.
(86) International Application No :PCT/US2011/046138
Filing Date :01/08/2011
(87) International Publication No :WO 2012/018731
(61) Patent of Addition to Application Number :NA
Filing Date :NA
(62) Divisional to Application Number :NA
Filing Date :NA

(71)**Name of Applicant :**
1)NIKE INTERNATIONAL LTD.
Address of Applicant :One Bowerman Drive Beaverton OR 97005 6453 U.S.A.
(72)**Name of Inventor :**
1)HUFFA Bruce
2)FARRIS Bryan N.

(57) Abstract :
A method of manufacturing an article of footwear may include assembling at least a portion of an upper of the article of footwear the upper having a lower perimeter edge. A lasting element is secured to the upper. The lasting element includes (a) a first strip joined to a lateral side of the upper adjacent to the lower perimeter edge (b) a second strip joined to a medial side of the upper adjacent to the lower perimeter edge and (c) at least one strand extending through the first strip and the second strip. The strand is tensioned and a sole structure of the article of footwear is joined to the upper.

No. of Pages : 48 No. of Claims : 27

(12) PATENT APPLICATION PUBLICATION
(19) INDIA
(22) Date of filing of Application :04/04/2013
(21) Application No.1542/CHE/2013 A
(43) Publication Date : 07/11/2014

(54) Title of the invention : NOVEL INTERMEDIATES AND PROCESS FOR THE PREPARATION OF LAPATINIB

(51) International classification :C07D
(31) Priority Document No :NA
(32) Priority Date :NA
(33) Name of priority country :NA
(86) International Application No :NA
Filing Date :NA
(87) International Publication No : NA
(61) Patent of Addition to Application Number :NA
Filing Date :NA
(62) Divisional to Application Number :NA
Filing Date :NA

(71)**Name of Applicant :**
1)NATCO PHARMA LIMITED
Address of Applicant :NATCO HOUSE, ROAD NO.2, BANJARA HILLS, HYDERABAD 500 033 Andhra Pradesh India
(72)**Name of Inventor :**
1)MUDDASANI PULLA REDDY
2)TALASILA SAMBASIVA RAO
3)SATTI VENKATA REDDY
4)NEKKANTI SATISH CHOWDARY
5)NANNAPANENI VENKAIAH CHOWDHARY

(57) Abstract :
Present process relates to an improved and commercial process for the preparation of lapatinib of formula-I or its pharmaceutically acceptable p-toluenesulfonate salt involving novel intermediates of formulae-XVII, XVIII, and XIX. Present process utilizes Meerwein reaction as a key step in the aryl C-C bond formation step avoiding costly boronate coupling chemistry used in the conventional synthesis of lapatinib.

No. of Pages : 29 No. of Claims : 19

(12) PATENT APPLICATION PUBLICATION
(19) INDIA
(22) Date of filing of Application :28/02/2013
(21) Application No.1659/CHENP/2013 A
(43) Publication Date : 07/11/2014

(54) Title of the invention : UPDATING METHOD FOR VEHICLE AIR CONDITIONING DEVICE AND VEHICLE AIR CONDITIONING DEVICE

(51) International classification :B60H1/32,B61D27/00
(31) Priority Document No :NA
(32) Priority Date :NA
(33) Name of priority country :NA
(86) International Application No :PCT/JP2010/005557
Filing Date :10/09/2010
(87) International Publication No :WO 2012/032587
(61) Patent of Addition to Application Number :NA
Filing Date :NA
(62) Divisional to Application Number :NA
Filing Date :NA

(71)**Name of Applicant :**
1)Mitsubishi Electric Corporation
Address of Applicant :7 3 Marunouchi 2 chome Chiyoda ku Tokyo 1008310 Japan
(72)**Name of Inventor :**
1)URAKAWA Masatoshi
2)TAKATANI Shiro

(57) Abstract :
Provided is an updating method for a vehicle air conditioning device that updates a vehicle air conditioning device (100a) using an old refrigerant which is disposed in a frame (8) mounted on a vehicle (1) to a vehicle air conditioning device (100b) using an alternative refrigerant and that has a detaching step of detaching the vehicle air conditioning device (100a) from the frame (8) an assembly step of disposing in the frame (8) the vehicle air conditioning device (100b) formed so as to be capable of being stored in the frame (8) and a filling step of filling the alternative refrigerant to the vehicle air conditioning device (100b). A refrigerant circulation volume of the vehicle air conditioning device (100b) is set to be more than that of the vehicle air conditioning device (100a) and heat exchange contents per unit volume of an outside heat exchanger (14b) and an inside heat exchanger (12b) are set to be larger than those before update.

No. of Pages : 46 No. of Claims : 12

(12) PATENT APPLICATION PUBLICATION
(19) INDIA
(22) Date of filing of Application :10/01/2013
(21) Application No.140/CHE/2013 A
(43) Publication Date : 07/11/2014

(54) Title of the invention : A SYSTEM AND A METHOD FOR REMOVING PRECUT ROCK BLOCKS FROM QUARRY WITHOUT DEPOSITING WASTE MATERIALS AND THE USE OF EXPLOSIVES

(51) International classification :B28D
(31) Priority Document No :NA
(32) Priority Date :NA
(33) Name of priority country :NA
(86) International Application No :NA
Filing Date :NA
(87) International Publication No : NA
(61) Patent of Addition to Application Number :NA
Filing Date :NA
(62) Divisional to Application Number :NA
Filing Date :NA

(71)**Name of Applicant :**
1)SHAJU JOHN
Address of Applicant :VENGACHUVATTIL PUZHAMUDI P.O KALPETTA WYNAD Kerala India
(72)**Name of Inventor :**
1)SHAJU JOHN

(57) Abstract :
One aspect of the present invention relates to a method for quarrying rock comprising providing at least four spaced-apart horizontal relief comprising at least two substantially parallel slots into a layer of rock such that a rock piece Is defined between the relief slots, and removing the rock piece from between the relief slots by providing at least one straight cut slot. By way of non- limiting example, the relief slots can be cut to a depth of at least 7 and 14 inches. A preferred method of removing the rock piece involves applying pressure to the rock piece by means of a cutting mechanism executed by the diamond edged tool and activated by the motor means in a direction generally transverse with respect to the slots. The other aspect of the invention relates to an apparatus comprising a vehicle attached with movable means, cutting mechanisms and cooling means for excavating the rocks of pre-determined shapes and sizes from the rock quarry without the use of explosives and without creating waste boulder. Fig.1

No. of Pages : 18 No. of Claims : 10

(12) PATENT APPLICATION PUBLICATION
(19) INDIA
(22) Date of filing of Application :01/03/2013
(21) Application No.1682/CHENP/2013 A
(43) Publication Date : 07/11/2014

(54) Title of the invention : METHOD AND SYSTEM FOR RETAINING A CARTRIDGE IN A HOLDER

(51) International classification :A61M5/145
(31) Priority Document No :61/371238
(32) Priority Date :06/08/2010
(33) Name of priority country :U.S.A.
(86) International Application No :PCT/EP2011/063502
Filing Date :05/08/2011
(87) International Publication No :WO 2012/017063
(61) Patent of Addition to Application Number :NA
Filing Date :NA
(62) Divisional to Application Number :NA
Filing Date :NA

(71)**Name of Applicant :**
1)Sanofi Aventis Deutschland GmbH
Address of Applicant :Br¼ningstrae 50 65929 Frankfurt Germany
(72)**Name of Inventor :**
1)AVERY Richard James Vincent
2)BUTLER Joseph

(57) Abstract :
A method and system for retaining a drug cartridge (1001 216 300 402 452 502 552 704 724 744 764 784) in a cartridge holder (1002 1008 154 202 302 400 450 700 720 740 760 780). As an example a retaining member (1003 1007 150 200 250 304 320 330 340 410 454 702 722 742 762 782) for retaining a drug cartridge (1001 216 300 402 452 502 552 704 724 744 764 784) in a cartridge holder (1002 1008 154 202 302 400 450 700 720 740 760 780) includes at least one connection feature (204) for connecting to the drug cartridge (1001 216 300 402 452 502 552 704 724 744 764 784). The at least one connection feature (204) is on an outer wall of the retaining member (1003 1007 150 200 250 304 320 330 340 410 454 702 722 742 762 782). The retaining member (1003 1007 150 200 250 304 320 330 340 410 454 702 722 742 762 782) further includes at least one retention feature (129 208 210 252 254 1006) and this at least one retention feature (129 208 210 252 254 1006) extends from an inner wall of the retaining member(1003 1007 150 200 250 304 320 330 340 410 454 702 722 742 762 782). When the retaining member (1003 1007 150 200 250 304 320 330 340 410 454 702 722 742 762 782) is connected to the cartridge holder (1002 1008 154 202 302 400 450 700 720 740 760 780) the retaining member (1003 1007 150 200 250 304 320 330 340 410 454 702 722 742 762 782) retains the drug cartridge (1001 216 300 402 452 502 552 704 724 744 764 784) in the cartridge holder (1002 1008 154 202 302 400 450 700 720 740 760 780).

No. of Pages : 69 No. of Claims : 20

(12) PATENT APPLICATION PUBLICATION
(19) INDIA
(22) Date of filing of Application :08/02/2013
(21) Application No.1076/CHENP/2013 A
(43) Publication Date : 07/11/2014

(54) Title of the invention : PROCESS FOR THE PREPARATION OF CONTRAST AGENTS

(51) International classification :C07C231/10
(31) Priority Document No :PD2010A000222
(32) Priority Date :15/07/2010
(33) Name of priority country :Italy
(86) International Application No :PCT/EP2011/062052
Filing Date :14/07/2011
(87) International Publication No :WO 2012/007547
(61) Patent of Addition to Application Number :NA
Filing Date :NA
(62) Divisional to Application Number :NA
Filing Date :NA

(71)**Name of Applicant :**
1)BRACCO IMAGING S.P.A.
Address of Applicant :Via Egidio Folli 50 I 20134 Milano Italy
(72)**Name of Inventor :**
1)ANELLI Pier Lucio
2)BROCCHETTA Marino
3)CAPPELLETTI Enrico
4)GAZZOTTI Ornella

(57) Abstract :
The present invention relates to a process for the preparation of 5 [(2 hydroxyacyl)amino] 2 4 6 triiodo 1 3 benzendicarboxamidic derivatives comprising the Smiles rearrangement of a suitable precursor by contact of an aqueous solution of this latter with an anion exchanger solid phase.

No. of Pages : 19 No. of Claims : 10

(12) PATENT APPLICATION PUBLICATION
(19) INDIA
(22) Date of filing of Application :21/03/2013
(21) Application No.1236/CHE/2013 A
(43) Publication Date : 07/11/2014

(54) Title of the invention : CALCULATING TRUST SCORE ON WEB BASED PLATFORM

(51) International classification :G06f
(31) Priority Document No :NA
(32) Priority Date :NA
(33) Name of priority country :NA
(86) International Application No :NA
Filing Date :NA
(87) International Publication No : NA
(61) Patent of Addition to Application Number :NA
Filing Date :NA
(62) Divisional to Application Number :NA
Filing Date :NA

(71)**Name of Applicant :**
1)INFOSYS LIMITED
Address of Applicant :IP CELL, PLOT NO.44, ELECTRONIC CITY, HOSUR ROAD, BANGALORE - 560 100 Karnataka India
(72)**Name of Inventor :**
1)SHAILESH KUMAR SHIVAKUMAR

(57) Abstract :
A computer implemented method for calculating trust level of user on social networking sites, the method comprising: consolidating information related to users operatively associated with at least a web based social platform; assigning weight to each of the consolidated information; computing aggregated score for at least an information; computing weighted average of the aggregated scores of the information; and calculating trust score based on the weighted average score. It further comprises assigning a trust level to the users based upon the trust. It further comprises recommending a first user to a second user for at least a social contact or friendship on the web based social platform wherein recommendation is based upon the trust level. The method enables a user to create web of trust for social contacts or friends on the web based social platform wherein the web of trust comprises of most trusted friends, average trusted friends and least trusted friends. REF FIG: 1

No. of Pages : 28 No. of Claims : 20

(12) PATENT APPLICATION PUBLICATION
(19) INDIA
(22) Date of filing of Application :21/03/2013
(21) Application No.1238/CHE/2013 A
(43) Publication Date : 07/11/2014

(54) Title of the invention : HEALTHCARE RECALL MANAGEMENT

(51) International classification :G06F
(31) Priority Document No :NA
(32) Priority Date :NA
(33) Name of priority country :NA
(86) International Application No :NA
Filing Date :NA
(87) International Publication No : NA
(61) Patent of Addition to Application Number :NA
Filing Date :NA
(62) Divisional to Application Number :NA
Filing Date :NA

(71)**Name of Applicant :**
1)INFOSYS LIMITED
Address of Applicant :IP CELL, PLOT NO.44, ELECTRONIC CITY, HOSUR ROAD, BANGALORE - 560 100 Karnataka India
(72)**Name of Inventor :**
1)KARTHIKEYAN KANIYUR SUBBIAN
2)RASHMI SHENOY
3)SUBRAHMANYA RAYASAMUDRA MRUTHYUNJAYA

(57) Abstract :
Various technologies related to managing a medical device recall are implemented. Automated recall functions can facilitate an efficient and effective recall process. Full lifecycle of the recall process can be managed including communication with patients and replacement of devices, as well as auditing and regulatory compliance. Via the technologies described herein, healthcare providers can manage a successful medical device recall. Unique device identification, electronic health records, electronic medical records, and nationwide health information networks can be supported. A unique device identifier-centric approach can support a very high degree of automation and avoid errors during any of a variety of segments in the medical device recall life cycle.

No. of Pages : 62 No. of Claims : 20

(12) PATENT APPLICATION PUBLICATION
(19) INDIA
(22) Date of filing of Application :22/02/2013
(21) Application No.1456/CHENP/2013 A
(43) Publication Date : 07/11/2014

(54) Title of the invention : PACKET SWITCHED COMMUNICATION PRECEDENCE AT MULTI MODE COMMUNICATION DEVICE

(51) International classification :H04L
(31) Priority Document No :.
(32) Priority Date :22/02/2012
(33) Name of priority country :
(86) International Application No :PCT/CN2010/076416
Filing Date :27/08/2010
(87) International Publication No :WO 2012/024844
(61) Patent of Addition to Application Number :NA
Filing Date :NA
(62) Divisional to Application Number :NA
Filing Date :NA

(71)**Name of Applicant :**
1)QUALCOMM INCORPORATED
Address of Applicant :ATTN: International IP Administration 5775 Morehouse Drive San Diego California 92121 1714 U.S.A.
(72)**Name of Inventor :**
1)LI Yan
2)GAO Lu
3)ZHANG Wentao

(57) Abstract :
In a particular embodiment a circuit switched (CS) paging message is received at a multi mode communication device. The CS paging message is received when a packet switched (PS) service is active at the multi mode communication device. A PS precedence feature is activated at the multi mode communication device that prioritizes PS communications over CS communications. A CS bearer connection is established with a CS network in response to receiving the CS paging message and an incoming call notification message that identifies a calling party is received from the CS network. Upon receipt of the incoming call notification message the CS bearer connection with the CS network is released. A notification of a missed incoming call from the calling party is displayed (e.g. substantially in real time) via a user interface.

No. of Pages : 33 No. of Claims : 23

(12) PATENT APPLICATION PUBLICATION
(19) INDIA
(22) Date of filing of Application :01/03/2013
(21) Application No.1685/CHENP/2013 A
(43) Publication Date : 07/11/2014

(54) Title of the invention : PROCESS FOR THE SYNTHESIS OF 2 5 FURANDICARBOXYLIC ACID.

(51) International classification :C07D307/68
(31) Priority Document No :MI2010A001526
(32) Priority Date :06/08/2010
(33) Name of priority country :Italy
(86) International Application No :PCT/EP2011/063482
Filing Date :04/08/2011
(87) International Publication No :WO 2012/017052
(61) Patent of Addition to Application Number :NA
Filing Date :NA
(62) Divisional to Application Number :NA
Filing Date :NA

(71)**Name of Applicant :**
1)NOVAMONT S.p.A.
Address of Applicant :Via G. Fauser 8 I 28100 Novara Italy
(72)**Name of Inventor :**
1)BORSOTTI Giampietro
2)DIGIOIA Francesca

(57) Abstract :
Process for the synthesis of 2 5 furandicarboxylic acid through the oxidation of hydroxymethylfurfural in a flow of oxygenor a compound containing oxygen catalysed by a supported catalyst containing a metal of the platinum group carried out in aqueous solution in which the pH is maintained higher than7 and lower than12through the addition of a weak base.

No. of Pages : 11 No. of Claims : 14

(12) PATENT APPLICATION PUBLICATION
(19) INDIA
(22) Date of filing of Application :22/03/2013
(21) Application No.1254/CHE/2013 A
(43) Publication Date : 07/11/2014

(54) Title of the invention : EQUIPMENT FOR MANUFACTURING BY ROLLING A COMPLEX SHAPE ANNULAR ELEMENT, IN PARTICULAR A STEEL INSERT FOR AN OUTER RING OF A ROLLING BEARING

(51) International classification :B21d
(31) Priority Document No :TO2012A000267
(32) Priority Date :26/03/2012
(33) Name of priority country :Italy
(86) International Application No :NA
Filing Date :NA
(87) International Publication No : NA
(61) Patent of Addition to Application Number :NA
Filing Date :NA
(62) Divisional to Application Number :NA
Filing Date :NA

(71)**Name of Applicant :**
1)AKTIEBOLAGET SKF
Address of Applicant :415 50 GOTEBORG Sweden
(72)**Name of Inventor :**
1)STEFANO GALFRE
2)FABIO ROSTAGNO

(57) Abstract :
An equipment (1) including an axial-symmetrically shaped forming tool (5), rotating about a first axis and cooperating with an axial-symmetrically shaped mandrel (10) revolving about a second axis parallel to the first and having a predetermined longitudinal profile; and respective receiving rolls (14,15) carried revolving by a support adapted to support a perpendicular thrust (S) exerted in use on the forming tool, cooperating with a first and a second radial shoulder surface (17,18) of the mandrel between which the working surface (11) is delimited; the first and the second shoulder surface (17,18) of the mandrel have, at opposite ends (21,22) of the longitudinal profile of the working surface, a first and a second diameter (D1,D2), the first smaller than the second, the first shoulder surface (17) being arranged immediately adjacent to a first end (20) of the mandrel.

No. of Pages : 20 No. of Claims : 8

(12) PATENT APPLICATION PUBLICATION
(19) INDIA
(22) Date of filing of Application :28/03/2013
(21) Application No.1414/CHE/2013 A
(43) Publication Date : 07/11/2014

(54) Title of the invention : CATALYTIC REACTOR WITH QUENCH DEVICE PROVIDED WITH TANGENTIAL INJECTION OF A QUENCH FLUID

(51) International classification :F24J
(31) Priority Document No :12/01.009
(32) Priority Date :04/04/2012
(33) Name of priority country :France
(86) International Application No :NA
Filing Date :NA
(87) International Publication No : NA
(61) Patent of Addition to Application Number :NA
Filing Date :NA
(62) Divisional to Application Number :NA
Filing Date :NA

(71)**Name of Applicant :**
1)IFP ENERGIES NOUVELLES
Address of Applicant :1 & 4 AVENUE DE BOIS-PREAU, 92852 RUEIL-MALMAISON CEDEX France
(72)**Name of Inventor :**
1)AUGIER, FREDERIC
2)BOYER, CHRISTOPHE
3)SVEZIA, DANIEL

(57) Abstract :
The catalytic reactor is composed of an enclosure 1 comprising at least two beds of solid catalyst 2 and 11 separated by a collector plate 6 cooperating with a quench box 7. The reactor comprises an injection nozzle 5 disposed in the collecting region 4 located above the collector plate 6. The injection nozzle 5 consists of a tube comprising a single orifice located at the end of the tube, and the maximum distance between the enclosure and the nozzle is in the range 0 to 40 cm. The end of the injection nozzle 5 is composed of a tubular portion configured so as to inject fluid into the collecting region 4 in a substantially horizontal direction and forming an angle in the range -10° to +10° with respect to the direction tangential to the wall of the enclosure 1 at said tubular portion.

No. of Pages : 16 No. of Claims : 11

(12) PATENT APPLICATION PUBLICATION
(19) INDIA
(22) Date of filing of Application :25/02/2013
(21) Application No.1524/CHENP/2013 A
(43) Publication Date : 07/11/2014

(54) Title of the invention : INLINE SPECTROSCOPIC READER AND METHODS

(51) International classification :G01J3/44
(31) Priority Document No :61/378552
(32) Priority Date :31/08/2010
(33) Name of priority country :U.S.A.
(86) International Application No :PCT/US2011/050008
Filing Date :31/08/2011
(87) International Publication No :WO 2012/030988
(61) Patent of Addition to Application Number :NA
Filing Date :NA
(62) Divisional to Application Number :NA
Filing Date :NA

(71)**Name of Applicant :**
1)CABOT SECURITY MATERIALS INC.
Address of Applicant :325 E. Middlefield Road Mountain View California 94043 U.S.A.
(72)**Name of Inventor :**
1)WALTON Ian D.
2)DOERING William E.
3)NATAN Michael J.

(57) Abstract :
An inline spectroscopic reader having a light source one or more optics heads a spectrometer and a data processing system in digital communication with the spectrometer detector. The optics heads include transmission optics providing for the illumination of a target with light from the light source and detection optics providing for the collection of light from the target. Typically the target is moving with respect to the optics head during spectroscopic interrogation. The spectroscopic reader is thus an inline reader well suited to provide spectrum based production or analytical decision making in real time as the target moves along a production or analysis line. Also disclosed are methods including the steps of illuminating a target with light from a light source; collecting light from the target; obtaining a digitized spectrum with a spectrometer; extracting information content from the digitized spectrum; and basing a contemporaneous process decision upon the information content.

No. of Pages : 40 No. of Claims : 22

(12) PATENT APPLICATION PUBLICATION
(19) INDIA
(22) Date of filing of Application :01/03/2013
(21) Application No.1697/CHENP/2013 A
(43) Publication Date : 07/11/2014

(54) Title of the invention : CARRYING FRAME WITH DAMPING ELEMENTS FOR BEARING A LIFT CAR

(51) International classification :B66B11/02
(31) Priority Document No :10174875.4
(32) Priority Date :01/09/2010
(33) Name of priority country :EPO
(86) International Application No :PCT/EP2011/064865
Filing Date :30/08/2011
(87) International Publication No :WO 2012/028597
(61) Patent of Addition to Application Number :NA
Filing Date :NA
(62) Divisional to Application Number :NA
Filing Date :NA

(71)**Name of Applicant :**
1)INVENTIO AG
Address of Applicant :Seestrasse 55 CH 6052 Hergiswil Switzerland
(72)**Name of Inventor :**
1)BRGGER Beat
2)SCHULER Christoph
3)ZEDER Lukas
4)WEST Thomas
5)SCHAFFHAUSER Urs
6)STREBEL Ren

(57) Abstract :
In the case of this carrying frame (4) each lower corner of the car has a support (8) on which at least one damping element (13) is arranged. The support (8) has a U shaped cross section and can be pushed into a second or third carrier (9 10) of C shaped cross section. The lift car (7) is mounted on the damping elements (13) which isolates the lift car (7) from oscillation and vibration. The damping elements (13) rest on the second or third carrier (9 10). A device is provided alongside the pushed in support (8) for the purpose of raising the lift car (7) if the support (8) or at least one damping element (13) has to be replaced.

No. of Pages : 11 No. of Claims : 7

(12) PATENT APPLICATION PUBLICATION
(19) INDIA
(22) Date of filing of Application :28/02/2013
(21) Application No.1663/CHENP/2013 A
(43) Publication Date : 07/11/2014

(54) Title of the invention : ROTARY HEARTH FURNACE EXHAUST GAS DUCT APPARATUS AND METHOD FOR OPERATING SAME

(51) International classification :F27B9/30,C21B11/08,C21B13/10
(31) Priority Document No :2010196415
(32) Priority Date :02/09/2010
(33) Name of priority country :Japan
(86) International Application No :PCT/JP2011/070032
Filing Date :02/09/2011
(87) International Publication No :WO 2012/029947
(61) Patent of Addition to Application Number :NA
Filing Date :NA
(62) Divisional to Application Number :NA
Filing Date :NA

(71)**Name of Applicant :**
1)KABUSHIKI KAISHA KOBE SEIKO SHO
Address of Applicant :10 26 Wakinohama cho 2 chome Chuo ku Kobe shi Hyogo 6518585 Japan
(72)**Name of Inventor :**
1)TSUGE Osamu
2)TOKUDA Koji
3)MIZUTANI Noriaki

(57) Abstract :
The purpose of the present invention is to provide a rotary hearth furnace exhaust gas duct apparatus which produces reduced iron or granular metal iron by heating a raw material containing a carbonaceous reduction material and an iron oxide containing substance which can collect dust while also avoiding problems that accompany increases in exhaust gas amount and temperature and which also can stably operate for a long period of time at a high thermal efficiency and to provide a method for operating the rotary hearth furnace exhaust gas duct apparatus. A cooling unit (12) for solidifying metal salt in exhaust gas discharged from a rotary hearth furnace by cooling the exhaust gas a collision unit (13) for colliding the exhaust gas immediately after cooling to cause the solidified metal salt to fall and a direction conversion duct (14) for leading the collided exhaust gas in a direction other than the direction in which the metal salt fell are disposed in two stages in the aforementioned order in a rotary hearth furnace exhaust gas duct (8) in the rotary hearth furnace exhaust gas duct apparatus (11) according to the present invention.

No. of Pages : 30 No. of Claims : 15

(12) PATENT APPLICATION PUBLICATION
(19) INDIA
(22) Date of filing of Application :12/04/2013
(21) Application No.1664/CHE/2013 A
(43) Publication Date : 07/11/2014

(54) Title of the invention : AN ART, METHOD, MANNER, PROCESS, PROCEDURE AND APPLICATION FOR ONLINE HEALTH PROGNOSIS

(51) International classification :G06f
(31) Priority Document No :NA
(32) Priority Date :NA
(33) Name of priority country :NA
(86) International Application No :NA
Filing Date :NA
(87) International Publication No : NA
(61) Patent of Addition to Application Number :NA
Filing Date :NA
(62) Divisional to Application Number :NA
Filing Date :NA

(71)**Name of Applicant :**
1)SREEJITH NADUKKANDY VIJAYARAJ
Address of Applicant :28/3701-C, VIJAYASREE, KUTHIRAVATTAM (PO), CALICUT - 673 016 Kerala India
(72)**Name of Inventor :**
1)SREEJITH NADUKKANDY VIJAYARAJ

(57) Abstract :
The invention explained in this document is an outcome of over 3 years research and analysis done by me on the subject of comprehensive and sustainable model for providing proactive or preventive healthcare solutions relevant in the contemporary world; where in, on the one hand, the incidence of lifestyle related diseases are on the rise at an alarming pace with the rapidly changing lifestyle as well as lack of proactive healthcare measures together contributing to over 70% of all critical and life threatening diseases across the world; and on the other hand, convenience, speed, quality and cost effectiveness have become the priority for choosing various services by the people. Thus, the invention encompasses all these elements to churn out an innovative solution for people to easily access, monitor and track their entire healthcare aspects with special focus on the preventive healthcare needs through a lifetime sustainable and technology driven platform Online Health Prognosis Portal.

No. of Pages : 10 No. of Claims : 8

(12) PATENT APPLICATION PUBLICATION
(19) INDIA
(22) Date of filing of Application :28/02/2013
(21) Application No.1664/CHENP/2013 A
(43) Publication Date : 07/11/2014

(54) Title of the invention : THIN POLARIZING FILM OPTICAL LAMINATE WITH THIN POLARIZING FILM AND PRODUCTION METHOD FOR THIN POLARIZING FILM

(51) International classification :G02B5/30,B29C55/06,B32B27/30
(31) Priority Document No :2010198220
(32) Priority Date :03/09/2010
(33) Name of priority country :Japan
(86) International Application No :PCT/JP2011/069991
Filing Date :02/09/2011
(87) International Publication No :WO 2012/029937
(61) Patent of Addition to Application Number :NA
Filing Date :NA
(62) Divisional to Application Number :NA
Filing Date :NA

(71)**Name of Applicant :**
1)NITTO DENKO CORPORATION
Address of Applicant :1 1 2 Shimohozumi Ibaraki shi Osaka 5678680 Japan
(72)**Name of Inventor :**
1)IZAKI Akinori
2)KITAGAWA Takeharu
3)GOTO Shusaku
4)KAMIJO Takashi
5)MORI Tomohiro
6)MIYATAKE Minoru

(57) Abstract :
A thin polarizing film with little environmental impact and excellent optical characteristics is provided. The thin polarizing film is produced by forming a polyvinyl alcohol based resin layer (12) on top of a thermoplastic resin substrate (11) and has a thickness of 10 μm or less a unit transmittance of 42.0% or more a degree of polarization of 99.95% or higher and an iodine content measured by ion chromatography of 17.6g/(400 mm x 700 mm)or less.

No. of Pages : 45 No. of Claims : 5

(12) PATENT APPLICATION PUBLICATION
(19) INDIA
(22) Date of filing of Application :05/03/2013
(21) Application No.1784/CHENP/2013 A
(43) Publication Date : 07/11/2014

(54) Title of the invention : RESISTANCE BASED MEMORY HAVING TWO DIODE ACCESS DEVICE

(51) International classification :G11C11/16,G11C13/00
(31) Priority Document No :12/892237
(32) Priority Date :28/09/2010
(33) Name of priority country :U.S.A.
(86) International Application No :PCT/US2011/053569
Filing Date :28/09/2011
(87) International Publication No :WO 2012/044640
(61) Patent of Addition to Application Number :NA
Filing Date :NA
(62) Divisional to Application Number :NA
Filing Date :NA

(71)**Name of Applicant :**
1)QUALCOMM INCORPORATED
Address of Applicant :ATTN: INTERNATIONAL IP ADMINISTRATION 5775 Morehouse Drive San Diego California 92121 U.S.A.
(72)**Name of Inventor :**
1)HAO Wuyang
2)SUH Jungwon
3)LEE Kangho
4)KIM Tae Hyun
5)KIM Jung Pill
6)KANG Seung H.

(57) Abstract :
A resistance based memory has a two diode access device. In a particular embodiment a method includes biasing a bit line (114) and a sense line (112) to generate a current through a resistance based memory element (110) via a first diode (116) or a second diode (118). A cathode of the first diode is coupled to the bit line and an anode of the second diode is coupled to the sense line.

No. of Pages : 37 No. of Claims : 42

(12) PATENT APPLICATION PUBLICATION
(19) INDIA
(22) Date of filing of Application :08/03/2013
(21) Application No.1001/CHE/2013 A
(43) Publication Date : 07/11/2014

(54) Title of the invention : HORIZANTAL AXIS WIND MILL WITH LATERAL SETS OF POPPING UP DRAG DOOR PANS AND PRESSURE RELEASE SYSTEM

(51) International classification :F03D
(31) Priority Document No :NA
(32) Priority Date :NA
(33) Name of priority country :NA
(86) International Application No :NA
Filing Date :NA
(87) International Publication No : NA
(61) Patent of Addition to Application Number :NA
Filing Date :NA
(62) Divisional to Application Number :NA
Filing Date :NA

(71)**Name of Applicant :**
1)M. MOHAMED ALI
Address of Applicant :PLOT NO.5, DOOR NO.227/1, KURINJI NAGAR, UDUMALAI ROAD, CHITRAVUTHAM PALAYAM (PO), DHARAPURAM, PIN 638 657, TIRUPUR DISTRICT Tamil Nadu India
(72)**Name of Inventor :**
1)M. MOHAMED ALI

(57) Abstract :
A device is useful to generate electricity using wind energy. It is a novel concept of the horizontal axis wind mill. The device is comprising of a vertical pillar 9 with a rotatable Horizontal platform 10 at the top. A horizontal central rod 1 attached horizontal platform 10 by means of bearings 12. Each side of the horizontal central rod 1 is carrying one set of popping up drag door pans 2 which consists of two or more number of popping up drag door pans 2 laterally attached with a sleeve 4 at equal distances and at equal angles. The sleeve 4 with popping up drag door pans 2 attached with the horizontal central rod 1 at lateral ends. Each set of popping up drag door pans 2 consisting of the sleeve 4 is the centre of the set of popping up drag door pans 2 and attached to the horizontal central rod 1. Each popping up drag door pan 2 is composed of a frame 2A with which two or more number of popping up drag door/s 3 are attached pivotally and horizontally. The popping up drag door/s 3 are open able only one side of the frame with the help of door stoppers 15 and do not cross over to the other side of the frame. The popping up drag doors 3 of two opposite popping up drag door pans 2 opens towards opposite direction. The popping up drag door/s 3 are aerodynamically shaped airfoils. While the wind blows over the wind mill, the door/s of one popping up drag door pan is closed by the wind force and pushed back by the blowing wind and results in rotation of the horizontal central rod 1. Simultaneously, the door/s of opposite popping up drag door pan 2 are forcefully opened by the wind and allow the wind to pass through the gaps in between the opened doors 3.

No. of Pages : 17 No. of Claims : 9

(12) PATENT APPLICATION PUBLICATION
(19) INDIA
(22) Date of filing of Application :08/01/2013

(21) Application No.119/CHE/2013 A
(43) Publication Date : 07/11/2014

(54) Title of the invention : SCREW HAVING AN UNDERHEAD BEARING SURFACE INCLUDING LUBRICANT POCKETS

(51) International classification :F16B
(31) Priority Document No :10 2012 100 228.2
(32) Priority Date :12/01/2012
(33) Name of priority country :Germany
(86) International Application No :NA
Filing Date :NA
(87) International Publication No : NA
(61) Patent of Addition to Application Number :NA
Filing Date :NA
(62) Divisional to Application Number :NA
Filing Date :NA

(71)**Name of Applicant :**
1)KAMAX HOLDING GMBH & CO. KG
Address of Applicant :DR.-RUDOLF-KELLERMANN-STRABE 2, 35315, HOMBERG (OHM) Germany
(72)**Name of Inventor :**
1)GROBECKER, MARKUS
2)BIETZ, NORBERT
3)HARTMANN, GUNTHER

(57) Abstract :
A screw (2) has a head (5) including an underhead bearing surface (12). Lubricant pockets (13) are arranged at least in a part of the underhead bearing surface (12). The lubricant pockets (13) serve to contain lubricant and to release the lubricant when tightening a screw joint (1) to prevent scuffing effects during multiple tightening processes.

No. of Pages : 18 No. of Claims : 15

(12) PATENT APPLICATION PUBLICATION
(19) INDIA
(22) Date of filing of Application :28/03/2013
(21) Application No.1397/CHE/2013 A
(43) Publication Date : 07/11/2014

(54) Title of the invention : METHODS AND COMPOSITIONS FOR PRODUCING POLARIZED LIGHT

(51) International classification :G01J
(31) Priority Document No :NA
(32) Priority Date :NA
(33) Name of priority country :NA
(86) International Application No :NA
Filing Date :NA
(87) International Publication No : NA
(61) Patent of Addition to Application Number :NA
Filing Date :NA
(62) Divisional to Application Number :NA
Filing Date :NA

(71)**Name of Applicant :**
1)EMPIRE TECHNOLOGY DEVELOPMENT LLC
Address of Applicant :2711 CENTERVILLE ROAD, SUITE 400, WILMINGTON, DE 19808 U.S.A.
(72)**Name of Inventor :**
1)THEVASAHAYAM AROCKIADOSS

(57) Abstract :
Polarized white light emitting devices are provided that have a substrate coated with a film of boron chains embedded in carbon nanotubes. An orientation of magnets adjacent the device polarizes and intensifies the light. Methods of making the devices, and methods of producing polarized white light are also provided.

No. of Pages : 39 No. of Claims : 10

(12) PATENT APPLICATION PUBLICATION
(19) INDIA
(22) Date of filing of Application :25/04/2013
(21) Application No.1830/CHE/2013 A
(43) Publication Date : 07/11/2014

(54) Title of the invention : A WIND TURBINE BRAKING SYSTEM USING EDDY CURRENT BRAKING

(51) International classification :F03D9/00
(31) Priority Document No :NA
(32) Priority Date :NA
(33) Name of priority country :NA
(86) International Application No :NA
Filing Date :NA
(87) International Publication No : NA
(61) Patent of Addition to Application Number :NA
Filing Date :NA
(62) Divisional to Application Number :NA
Filing Date :NA

(71)**Name of Applicant :**
1)VALAGAM RAJAGOPAL RAGHUNATHAN
Address of Applicant :OLD NO.6, NEW NO.62, 12TH AVENUE, ASHOK NAGAR, CHENNAI 600 083 Tamil Nadu India
(72)**Name of Inventor :**
1)VALAGAM RAJAGOPAL RAGHUNATHAN

(57) Abstract :
The present invention relates to a wind turbine with braking system for generating power at rated wind speed and stopping the turbine at predetermined conditions by means of selected number of generators (1). The wind turbine with braking system comprises of a main driving means (3), a plurality of generators (1), a small driving means (2), a tower assembly, a plurality of sensing means, a control means, a power supply means and a rotor assembly. When the control means detects the predetermined stopping condition then the control means diverts the generated power supply of plurality of generators(l) into the primary field of the selected number of generators thereby emf induced in the secondary field thereby speed of the wind turbine is controlled.

No. of Pages : 16 No. of Claims : 7

(12) PATENT APPLICATION PUBLICATION
(19) INDIA
(22) Date of filing of Application :01/03/2013
(21) Application No.1698/CHENP/2013 A
(43) Publication Date : 07/11/2014

(54) Title of the invention : METHODS AND APPARATUSES FOR DILUTE PHASE IMPREGNATION OF A MILLED SORBENT WITH A CHEMICAL COMPOUND IN AQUEOUS SOLUTION

(51) International classification :B01J20/20,B01J2/16/B01J2/04
(31) Priority Document No :12/875195
(32) Priority Date :03/09/2010
(33) Name of priority country :U.S.A.
(86) International Application No :PCT/US2011/049056
Filing Date :25/08/2011
(87) International Publication No :WO 2012/030604
(61) Patent of Addition to Application Number :NA
Filing Date :NA
(62) Divisional to Application Number :NA
Filing Date :NA

(71)**Name of Applicant :**
1)NORIT AMERICAS INC.
Address of Applicant :3200 University Avenue Marshall TX 75670 U.S.A.
(72)**Name of Inventor :**
1)NEBERGALL Robert S.
2)ADAMS Patton M.

(57) Abstract :
The present disclosure relates to apparatus designed to impregnate a sorbent. In some embodiments apparatus of the disclosure may comprise a mixing vessel having either a conical mixing chamber or an cylindrical mixing chamber designed to increase the contact surface area and/or contact/residence time of a sorbent and impregnant to produce compositions comprising an impregnated sorbent. Apparatus of the disclosure may also comprise one or more atomizers operable to produce atomized droplets of impregnant. The disclosure also provides methods for impregnation of a milled sorbent or an un milled sorbent. Methods of the disclosure provide several technical advantages and may be cost effective. Impregnant sorbent compositions produced by methods and/or apparatus of the disclosure may have higher concentrations of an impregnant a more uniform distribution of an impregnant and may have a greater sorbent efficiency.

No. of Pages : 48 No. of Claims : 38

(12) PATENT APPLICATION PUBLICATION
(19) INDIA
(22) Date of filing of Application :07/03/2013
(21) Application No.1865/CHENP/2013 A
(43) Publication Date : 07/11/2014

(54) Title of the invention : METHOD AND DEVICE FOR OBTAINING COMPRESSED OXYGEN AND COMPRESSED NITROGEN BY THE LOW TEMPERATURE SEPARATION OF AIR

(51) International classification :F25J3/04
(31) Priority Document No :10008480.5
(32) Priority Date :13/08/2010
(33) Name of priority country :EPO
(86) International Application No :PCT/EP2011/003982
Filing Date :09/08/2011
(87) International Publication No :WO 2012/019753
(61) Patent of Addition to Application Number :NA
Filing Date :NA
(62) Divisional to Application Number :NA
Filing Date :NA

(71)**Name of Applicant :**
1)LINDE AKTIENGESELLSCHAFT
Address of Applicant :Klosterhofstr. 1 80331 M¼nchen Germany
(72)**Name of Inventor :**
1)SCHWENK Dirk
2)ALEKSEEV Alexander
3)MASTERSON Frances
4)GOLOUBEV Dimitri

(57) Abstract :
The invention relates to a method and devoice for obtaining compressed oxygen and compressed nitrogen by the low temperature separation of air in a distillation column system for nitrogen oxygen separation said distillation column system having at least one high pressure column (8) and one low pressure column (460) wherein the low pressure column (460) is in a heat exchanging connection with the high pressure column (8) by means of a main condenser (461) designed as a condenser evaporator. Feed air is compressed in an air compressor (2). The compressed feed air (6 734 802 840) is cooled down in a main heat exchanger (20) and at least partially introduced into the high pressure column (8). An oxygen enriched liquid (462 465) is removed from the high pressure column (8) and fed to the low pressure column (460) at a first intermediate position (464 467 906). A nitrogen enriched liquid (468 470) is removed from the high pressure column (8) and/or the main condenser (461) and fed to the head of the low pressure column (460). A liquid oxygen flow (11 12) is removed from the distillation column system for nitrogen oxygen separation brought to an elevated pressure in the liquid state (13) introduced into the main heat exchanger (20) at said elevated pressure evaporated or pseudo evaporated and heated to approximately ambient temperature in the main heat exchanger (20) and finally obtained as a gaseous compressed oxygen product (14). A high pressure process flow (34 734) is brought into indirect heat exchange with the oxygen flow in the main heat exchanger (20) and then depressurized (36 38; 736 738) wherein the depressurized high pressure flow (37 737) is introduced at least partially in the liquid state into the distillation column system for nitrogen oxygen separation. A gaseous circuit nitrogen flow (18 19) is drawn from the high pressure column and at least partially (21) compressed in a circuit compressor (22). A first sub flow (45 46; 244 242 230; 845 846) of the circuit nitrogen flow is removed from the circuit compressor (22 322) cooled down in the main heat exchanger (20) at least partially condensed in the bottom evaporator (9 209) of the high pressure column (8) in indirect heat exchange with the bottom liquid of the high pressure column (8) and conducted back into the distillation column system for nitrogen oxygen separation. A second sub flow of the circuit nitrogen flow is branched off upstream and/or downstream of the circuit compressor and/or from an intermediate stage of the circuit compressor at a product pressure (P P1 P2 P3 P4) and obtained as a compressed nitrogen product (27 29 53 564 565). The circuit compressor (22 322) is designed as a hot compressor and is driven by means of external energy.

No. of Pages : 44 No. of Claims : 14

(12) PATENT APPLICATION PUBLICATION
(19) INDIA
(22) Date of filing of Application :20/03/2013
(21) Application No.1188/CHE/2013 A
(43) Publication Date : 07/11/2014

(54) Title of the invention : MOTOR CONTROL APPARATUS

(51) International classification	:F16F
(31) Priority Document No	:2012-066551
(32) Priority Date	:23/03/2012
(33) Name of priority country	:Japan
(86) International Application No	:NA
Filing Date	:NA
(87) International Publication No	: NA
(61) Patent of Addition to Application Number	:NA
Filing Date	:NA
(62) Divisional to Application Number	:NA
Filing Date	:NA

(71)**Name of Applicant :**
1)KABUSHIKI KAISHA YASKAWA DENKI
Address of Applicant :2-1, KUROSAKI-SHIROISHI, YAHATANISHI-KU, KITAKYUSHU-SHI, FUKUOKA 806-0004 Japan
(72)**Name of Inventor :**
1)KOICHI KIRIHARA
2)YASUFUMI YOSHIURA
3)YASUHIKO KAKU

(57) Abstract :
A motor control apparatus 2, aimed to reduce occurrence of a shock when switching between position detectors used for position control of a motor, includes a position controller 10 that generates a velocity command Vr on the basis of a position difference between a position command and a position feedback signal, a switcher 14 that switches the position feedback signal to be input to the position controller 10 from a first position signal Pfbl detected by a laser interferometer 6 to a second position signal Pfb2 detected by a position sensor 8, and a phase compensator 15 that compensates for a phase delay of the second position signal Pfb2 switched by the switcher 14 relative to the first position signal Pfbl.

No. of Pages : 31 No. of Claims : 6

(12) PATENT APPLICATION PUBLICATION
(19) INDIA
(22) Date of filing of Application :21/03/2013
(21) Application No.1235/CHE/2013 A
(43) Publication Date : 07/11/2014

(54) Title of the invention : SYSTEMS AND METHODS FOR ALLOCATING ONE OR MORE RESOURCES IN A COMPOSITE CLOUD ENVIRONMENT

(51) International classification :H04L
(31) Priority Document No :NA
(32) Priority Date :NA
(33) Name of priority country :NA
(86) International Application No :NA
Filing Date :NA
(87) International Publication No : NA
(61) Patent of Addition to Application Number :NA
Filing Date :NA
(62) Divisional to Application Number :NA
Filing Date :NA

(71)**Name of Applicant :**
1)INFOSYS LIMITED
Address of Applicant :IP CELL, PLOT NO.44, ELECTRONIC CITY, HOSUR ROAD, BANGALORE - 560 100 Karnataka India
(72)**Name of Inventor :**
1)SHYAM KUMAR DODDAVULA
2)MUDIT KAUSHIK
3)ARUN VISHWANATHAN

(57) Abstract :
The invention relates to a system and method for allocating one or more resources optimally in a composite cloud environment. This invention involves configuring organization and service level quota values, describing service composition, service unit, service level agreement, defining allocation model and resource allocation optimization algorithm. Based on these predefined rules the infrastructure, software and manual resources are assigned, future allocation is forecasted and resources are allocated to complete the service requests received from the users.

No. of Pages : 31 No. of Claims : 26

(12) PATENT APPLICATION PUBLICATION
(19) INDIA
(22) Date of filing of Application :01/03/2013
(21) Application No.1687/CHENP/2013 A
(43) Publication Date : 07/11/2014

(54) Title of the invention : SOLAR POWER CONVERSION SYSTEM

(51) International classification :H01L31/042
(31) Priority Document No :2010903477
(32) Priority Date :04/08/2010
(33) Name of priority country :Australia
(86) International Application No :PCT/AU2011/000985
Filing Date :04/08/2011
(87) International Publication No :WO 2012/016285
(61) Patent of Addition to Application Number :NA
Filing Date :NA
(62) Divisional to Application Number :NA
Filing Date :NA

(71)**Name of Applicant :**
1)DAVIES Kevin Stephen
Address of Applicant :18 Tecoma Street Duncraig Western Australia 6023 Australia
(72)**Name of Inventor :**
1)DAVIES Kevin Stephen

(57) Abstract :
A power conversion system (10) for converting power from a plurality of solar panels. The system (10) comprises a plurality of panel modules (14) each having an input (16) and an output (17) and being connected in series. Each panel module (14) is connected to at least one solar panel (12) that supplies power to the panel module (14). Voltage control circuitry is provided within each of the panel modules (14) to vary the voltage supplied between the input (16) and the output (17) between a maximum module voltage and a minimum module voltage. A control unit (29) in communication with the voltage control circuitry of each of the panel modules varies the voltage supplied across the input (16) and output (17) of each of the panel modules (14) such that the total voltage across the series connected panel modules (14) forms an AC signal or a rectified version of an AC signal.

No. of Pages : 30 No. of Claims : 34

(12) PATENT APPLICATION PUBLICATION
(19) INDIA
(22) Date of filing of Application :15/01/2013
(21) Application No.191/CHE/2013 A
(43) Publication Date : 07/11/2014

(54) Title of the invention : A METHOD AND SYSTEM FOR TRANSFEERING CONTENT SEAMLESSLY BETWEEN ELECTRONIC DEVICES

(51) International classification :G06F
(31) Priority Document No :NA
(32) Priority Date :NA
(33) Name of priority country :NA
(86) International Application No :NA
Filing Date :NA
(87) International Publication No : NA
(61) Patent of Addition to Application Number :NA
Filing Date :NA
(62) Divisional to Application Number :NA
Filing Date :NA

(71)**Name of Applicant :**
1)SAMSUNG ELECTRONICS COMPANY
Address of Applicant :416 MAETAN-DONG, YEONGTONG-GU, SUWON-SI, GYEONGGI-DO 442-742 Republic of Korea
(72)**Name of Inventor :**
1)REVOTI PRASAD BORA
2)HARSHIT MATHUR
3)APANGSHU SAHA

(57) Abstract :
A method and system for transferring content seamlessly between electronic devices is provided. The method includes receiving a first plurality of parameters associated with a file comprised on a first portable electronic device of a first user, copying the file from the first portable electronic device to a first primary communication device based on the first plurality of parameters using a secondary communication channel, transferring the file from the first primary communication device to a second primary communication device using a primary communication channel, and enabling a second user of a second portable electronic device to receive the file from the first portable electronic device. The system includes a plurality of portable electronic devices, a plurality of primary communication devices, a communication interface in electronic communication with the plurality of portable electronic devices and the plurality of primary communication devices, a memory that stores instructions and a processor.

No. of Pages : 24 No. of Claims : 9

(12) PATENT APPLICATION PUBLICATION
(19) INDIA
(22) Date of filing of Application :21/03/2013
(21) Application No.1232/CHE/2013 A
(43) Publication Date : 07/11/2014

(54) Title of the invention : METHODS AND SYSTEMS FOR CONTENT DELIVERY

(51) International classification :H04M
(31) Priority Document No :NA
(32) Priority Date :NA
(33) Name of priority country :NA
(86) International Application No :NA
Filing Date :NA
(87) International Publication No : NA
(61) Patent of Addition to Application Number :NA
Filing Date :NA
(62) Divisional to Application Number :NA
Filing Date :NA

(71)**Name of Applicant :**
1)INFOSYS LIMITED
Address of Applicant :IP CELL, PLOT NO.44, ELECTRONIC CITY, HOSUR ROAD, BANGALORE - 560 100 Karnataka India
(72)**Name of Inventor :**
1)GAURAV MITTAL
2)ADARSH
3)SUMEET HANSPAL
4)SAMARTH NARAYAN

(57) Abstract :
Embodiments of the present invention relate to method and system for transferring media content between two telecommunication devices. The method recited in the invention is for delivering media content from a first telecommunication device to a second telecommunication device. At the first step of the method, the first telecommunication device (FTD) sends a media content request to a second telecommunication device (STD). The second device checks the compatibility parameters of the first telecommunication device. If the first device is competent to receive the media content, a non-data delivery channel get utilized between the two devices and the content get delivered from the second device to the first device through the non-data channel.

No. of Pages : 18 No. of Claims : 23

(12) PATENT APPLICATION PUBLICATION
(19) INDIA
(22) Date of filing of Application :25/03/2013
(21) Application No.1288/CHE/2013 A
(43) Publication Date : 07/11/2014

(54) Title of the invention : METHOD AND SYSTEM FOR CONSTRUCTING BALANCES AND CALCULATING RETURNS ON THE CONSTRUCTED BALANCES

(51) International classification :g06f
(31) Priority Document No :NA
(32) Priority Date :NA
(33) Name of priority country :NA
(86) International Application No :NA
Filing Date :NA
(87) International Publication No : NA
(61) Patent of Addition to Application Number :NA
Filing Date :NA
(62) Divisional to Application Number :NA
Filing Date :NA

(71)**Name of Applicant :**
1)POLARIS FINANCIAL TECHNOLOGY LIMITED
Address of Applicant :POLARIS HOUSE, 244, ANNA SALAI, CHENNAI 600 006 Tamil Nadu India
(72)**Name of Inventor :**
1)SACHIN DINKARRAO PATIL
2)MALINI SHETTY
3)AMIT MADHOK
4)ARUN JAIN

(57) Abstract :
The present invention provides a method and system for defining balances and calculating returns on the balances in a banking system. In an embodiment, the method comprises defining balances from a configurable balance builder, the configurable balance builder is defined as a function of pre defined operands. The method calculates the returns from the balances defined in the configurable balance builder depending on conditions evaluated, and providing the returns to a core banking server.

No. of Pages : 25 No. of Claims : 10

(12) PATENT APPLICATION PUBLICATION
(19) INDIA
(22) Date of filing of Application :07/03/2013
(21) Application No.1860/CHENP/2013 A
(43) Publication Date : 07/11/2014

(54) Title of the invention : FLEXIBLE SEMICONDUCTOR DEVICE AND METHOD FOR PRODUCING SAME

(51) International classification :H01L21/336
(31) Priority Document No :2011066143
(32) Priority Date :24/03/2011
(33) Name of priority country :Japan
(86) International Application No :PCT/JP2012/001152
Filing Date :21/02/2012
(87) International Publication No :WO 2012/127780
(61) Patent of Addition to Application Number :NA
Filing Date :NA
(62) Divisional to Application Number :NA
Filing Date :NA

(71)**Name of Applicant :**
1)PANASONIC CORPORATION
Address of Applicant :1006 Oaza Kadoma Kadoma shi Osaka 5718501 Japan
(72)**Name of Inventor :**
1)SUZUKI Takeshi
2)HIRANO Koichi
3)MASUDA Shinobu

(57) Abstract :
This method for producing a flexible semiconductor device is characterized by comprising: a step for forming a gate electrode; a step for forming a gate insulating layer that comes into contact with the gate electrode; a step for forming a semiconductor layer on the gate insulating layer in such a manner as to face the gate electrode; a step for forming a source electrode and a drain electrode that come into contact with the semiconductor layer; a step for forming a flexible film layer in such a manner as to cover the semiconductor layer the source electrode and the drain electrode; a step for forming vias in the flexible film layer; a step for forming a first metal layer by laminating a metal foil on the flexible film layer thereby obtaining a semiconductor device precursor; and a step for processing the first metal layer so as to form wiring from part of the first metal layer. This method for producing a flexible semiconductor device is further characterized in that when the first metal layer is processed wiring is formed at a predetermined position by using at least one via of a plurality of vias as a positioning marker.

No. of Pages : 112 No. of Claims : 26

(12) PATENT APPLICATION PUBLICATION
(19) INDIA
(22) Date of filing of Application :15/01/2013
(21) Application No.192/CHE/2013 A
(43) Publication Date : 07/11/2014

(54) Title of the invention : SUPPORT STRUCTURE OF HONEYCOMB CARRIER

(51) International classification :F01N
(31) Priority Document No :2012-006019
(32) Priority Date :16/01/2012
(33) Name of priority country :Japan
(86) International Application No :NA
Filing Date :NA
(87) International Publication No : NA
(61) Patent of Addition to Application Number :NA
Filing Date :NA
(62) Divisional to Application Number :NA
Filing Date :NA

(71)**Name of Applicant :**
1)HONDA MOTOR CO., LTD.
Address of Applicant :1-1, MINAMI-AOYAMA 2-CHOME, MINATO-KU, TOKYO, 107-8556 Japan
(72)**Name of Inventor :**
1)HATAKEYAMA, YOSHIAKI

(57) Abstract :
The present invention has an object of suppressing a ring-shaped convex part that projects from the outer circumference of a honeycomb carrier from damaging at a location of a semi¬circle apex of case halves, as well as suppressing a retaining member surround the ring-shaped convex part from getting stuck at a mating part. A support structure of a honeycomb carrier retains the ring-shaped convex part (21) at the ring-shaped concave part (43) by interposing the sealing mat (3), and gaps between the ring-shaped convex part (21) and the ring-shaped concave part (43) located, respectively, at a mating part (46) at which case halves (41, 42) into which the case (4) is divided into two are brought together, and a semicircle apex (45) of the case halves (41, 42), are made larger than that at other portions.

No. of Pages : 35 No. of Claims : 5

(12) PATENT APPLICATION PUBLICATION
(19) INDIA
(22) Date of filing of Application :28/03/2013
(21) Application No.1385/CHE/2013 A
(43) Publication Date : 07/11/2014

(54) Title of the invention : METHOD AND SYSTEM FOR SYSTEM INFORMATION ACQUISITION OPTIMIZATION

(51) International classification :H04W
(31) Priority Document No :NA
(32) Priority Date :NA
(33) Name of priority country :NA
(86) International Application No :NA
Filing Date :NA
(87) International Publication No : NA
(61) Patent of Addition to Application Number :NA
Filing Date :NA
(62) Divisional to Application Number :NA
Filing Date :NA

(71)**Name of Applicant :**
1)TEJAS NETWORKS LIMITED
Address of Applicant :PLOT NO. 25, JP SOFTWARE PARK, ELECTRONICS CITY, PHASE-1, HOSUR ROAD, BANGALORE - 560 100 Karnataka India
(72)**Name of Inventor :**
1)ROHITH VIJAYAKUMAR HEGDE

(57) Abstract :
The various embodiments of the present invention provide a method and system for acquiring modified system information messages in user equipment. The method comprises of notifying a modification in system information to an user equipment for acquire the modified system information, where notification comprises of adding an Si-Modified flag to a scheduling information element in a system information block type 1, storing the system information in a network, acquiring a modified system information, comparing the modified system information with the stored system information, identifying a system information modification and transmitting the updated system information to the user equipment. The user equipment receives the system information modification notification from the network, decodes the schedulinglnfoList in the SIB1, processes the system information message in the schedulinglnfoList; identifies the modified system information messages, determines a SI window information for the modified system information acquires the modified system information and updates the stored system information.

No. of Pages : 27 No. of Claims : 8

(12) PATENT APPLICATION PUBLICATION
(19) INDIA
(22) Date of filing of Application :27/02/2013
(21) Application No.1610/CHENP/2013 A
(43) Publication Date : 07/11/2014

(54) Title of the invention : BULK FREEZE DRYING USING SPRAY FREEZING AND STIRRED DRYING

(51) International classification :F26B5/06
(31) Priority Document No :NA
(32) Priority Date :NA
(33) Name of priority country :NA
(86) International Application No :PCT/US2010/002167
Filing Date :04/08/2010
(87) International Publication No :WO 2012/018320
(61) Patent of Addition to Application Number :NA
Filing Date :NA
(62) Divisional to Application Number :NA
Filing Date :NA

(71)**Name of Applicant :**
1)IMA LIFE NORTH AMERICA INC.
Address of Applicant :2175 Military Road Tonawanda NY 14150 U.S.A.
(72)**Name of Inventor :**
1)DEMARCO Francis W.
2)RENZI Ernesto

(57) Abstract :
A freeze dryer processes bulk powder products. The freeze dryer freezes the product by mixing an atomized spray of product with sterile liquid nitrogen. The resultant powder is freeze dried in a vessel and the vessel contents is agitated to maintain product contact with heated vessel wall and to prevent agglomeration.

No. of Pages : 35 No. of Claims : 30

(12) PATENT APPLICATION PUBLICATION
(19) INDIA
(22) Date of filing of Application :05/03/2013
(21) Application No.1786/CHENP/2013 A
(43) Publication Date : 07/11/2014

(54) Title of the invention : ELECTRONIC PACKAGING WITH A VARIABLE THICKNESS MOLD CAP

(51) International classification :H01L23/367,H01L23/31
(31) Priority Document No :12/881549
(32) Priority Date :14/09/2010
(33) Name of priority country :U.S.A.
(86) International Application No :PCT/US2011/051612
Filing Date :14/09/2011
(87) International Publication No :WO 2012/037263
(61) Patent of Addition to Application Number :NA
Filing Date :NA
(62) Divisional to Application Number :NA
Filing Date :NA

(71)**Name of Applicant :**
1)QUALCOMM INCORPORATED
Address of Applicant :Attn: International IP Administration 5775 Morehouse Drive San Diego California 92121 U.S.A.
(72)**Name of Inventor :**
1)RAMADOSS Vivek
2)JHA Gopal C.
3)HEALY Christopher J.

(57) Abstract :
An electronic package with improved warpage compensation. The electronic package includes a mold cap having a variable thickness. The variable thickness can have a mound or dimple design. In another embodiment a method is provided for reducing unit warpage of an electronic package by designing the topography of a mold cap to compensate for warpage.

No. of Pages : 14 No. of Claims : 24

(12) PATENT APPLICATION PUBLICATION
(19) INDIA
(22) Date of filing of Application :26/04/2013
(21) Application No.1847/CHE/2013 A
(43) Publication Date : 07/11/2014

(54) Title of the invention : STEM CELL PRESERVATION METHODS USING CRYOGENIC CONDITIONS MADE FROM MECHANICAL PRINCIPLES

(51) International classification :f17c
(31) Priority Document No :NA
(32) Priority Date :NA
(33) Name of priority country :NA
(86) International Application No :NA
Filing Date :NA
(87) International Publication No : NA
(61) Patent of Addition to Application Number :NA
Filing Date :NA
(62) Divisional to Application Number :NA
Filing Date :NA

(71)**Name of Applicant :**
1)EESAVYASA TECHNOLOGIES PVT. LTD.
Address of Applicant :PLOT NO: 79, PHASE - III, SVCIE, BALANAGAR, HYDERABAD, R.R. DISTRICT - 500 037 Andhra Pradesh India
(72)**Name of Inventor :**
1)D.P. CHAKRAVARTHY
2)BANDA RAVI SANKAR

(57) Abstract :
In this method of invention, adiabatic compression nitrogen is achieved using screw rod, spring loaded kind of mechanical principles. This type of low power consuming compression systems can void cascading of multiple compressors now a days used for achieving cryogenic conditions need for stem cell preservation.

No. of Pages : 10 No. of Claims : 7

(12) PATENT APPLICATION PUBLICATION
(19) INDIA
(22) Date of filing of Application :12/03/2013
(21) Application No.1951/CHENP/2013 A
(43) Publication Date : 07/11/2014

(54) Title of the invention : BRAKE SYSTEM COMPONENT AXLE MOUNT

(51) International classification :B60G9/00
(31) Priority Document No :61/388285
(32) Priority Date :30/09/2010
(33) Name of priority country :U.S.A.
(86) International Application No :PCT/US2011/054170
Filing Date :30/09/2011
(87) International Publication No :WO 2012/044906
(61) Patent of Addition to Application Number :NA
Filing Date :NA
(62) Divisional to Application Number :NA
Filing Date :NA

(71)**Name of Applicant :**
1)HENDRICKSON USA L.L.C.
Address of Applicant :500 Park Boulevard Suite 1010 Itasca Illinois 60143 U.S.A.
2)PIERCE Phillippi
(72)**Name of Inventor :**
1)FULTON R. Scott
2)WESTNEDGE Andrew
3)RUBALSKIY Dmitriy
4)KEELER Michael

(57) Abstract :
A brake system component axle mount for a vehicle axle/suspension system includes an axle having at least one depression formed therein. A sleeve is formed with at least one depression and disposed about the axle so that the axle depression and the sleeve depression matingly engage one another to form a mated pair of depressions. A brake mount assembly is rigidly attached to the sleeve. A method of forming the brake system component axle mount includes providing an axle and disposing a sleeve about the axle. At least one mated pair of depressions is simultaneously formed in the axle and the sleeve. A brake mount assembly is rigidly attached to the sleeve.

No. of Pages : 43 No. of Claims : 20

(12) PATENT APPLICATION PUBLICATION
(19) INDIA
(22) Date of filing of Application :26/04/2013
(21) Application No.1844/CHE/2013 A
(43) Publication Date : 07/11/2014

(54) Title of the invention : MICROWAVE AND PULSED UV LASER BASED METHOD OF PHOTO CHEMICAL REACTIONS IN CHEMICAL SYNTHESIS

(51) International classification :f25d
(31) Priority Document No :NA
(32) Priority Date :NA
(33) Name of priority country :NA
(86) International Application No :NA
Filing Date :NA
(87) International Publication No : NA
(61) Patent of Addition to Application Number :NA
Filing Date :NA
(62) Divisional to Application Number :NA
Filing Date :NA

(71)**Name of Applicant :**
1)EESAVYASA TECHNOLOGIES PVT. LTD.
Address of Applicant :PLOT NO: 79, PHASE - III, SVCIE, BALANAGAR, HYDERABAD, R.R. DISTRICT - 500 037 Andhra Pradesh India
(72)**Name of Inventor :**
1)D.P. CHAKRAVARTHY
2)BANDA RAVI SANKAR

(57) Abstract :
In this invention, a chemical reactor is constructed with ultra low energy consuming servo motors and pneumatically controlled agitation systems. The reactor will be connected to mechanical advantage based low energy consuming pneumatically controlled compressed gas injection, thermo electric device refrigerated, chilled water circulation in the jacket systems. Level, pH, temperature, pressure and humidity sensors are arranged in protected fashion within the reactor and attached to intelligent automated control system.

No. of Pages : 10 No. of Claims : 10

(12) PATENT APPLICATION PUBLICATION
(19) INDIA
(22) Date of filing of Application :26/04/2013
(21) Application No.1845/CHE/2013 A
(43) Publication Date : 07/11/2014

(54) Title of the invention : ROAD AND RAIL TRANSPORTATION SYSTEMS USING CRYOGENIC CONDITION BASED NANO COMPOSITES

(51) International classification :F17C13/00
(31) Priority Document No :NA
(32) Priority Date :NA
(33) Name of priority country :NA
(86) International Application No :NA
Filing Date :NA
(87) International Publication No : NA
(61) Patent of Addition to Application Number :NA
Filing Date :NA
(62) Divisional to Application Number :NA
Filing Date :NA

(71)**Name of Applicant :**
1)EESAVYASA TECHNOLOGIES PVT. LTD.
Address of Applicant :PLOT NO: 79, PHASE - III, SVCIE, BALANAGAR, HYDERABAD, R.R. DISTRICT - 500 037 Andhra Pradesh India
(72)**Name of Inventor :**
1)D.P. CHAKRAVARTHY
2)BANDA RAVI SANKAR

(57) Abstract :
In this method of invention, cryogenic conditions are achieved by liquid nitrogen produced by simple mechanical principles and laid around specially designed rails or stripes on road. These rails and stripes of metal on roads are doped with super magnetic materials made up of rare earth metals nano compsites due to natural phenomena of super magnets undergoing e levitation under cryogenic conditions, frictionless mobility is obtained. This can be controlled by breaking the cryogenic environment wherever required to stop the frictionless transport at halt stations.

No. of Pages : 8 No. of Claims : 10

(12) PATENT APPLICATION PUBLICATION
(19) INDIA
(22) Date of filing of Application :26/04/2013
(21) Application No.1846/CHE/2013 A
(43) Publication Date : 07/11/2014

(54) Title of the invention : SATELLITE POWER GENERATION METHOD USING COMPRESSED AIR GENERATED BY SIMPLE MECHANICAL PRINCIPLES

(51) International classification :F03B
(31) Priority Document No :NA
(32) Priority Date :NA
(33) Name of priority country :NA
(86) International Application No :NA
Filing Date :NA
(87) International Publication No : NA
(61) Patent of Addition to Application Number :NA
Filing Date :NA
(62) Divisional to Application Number :NA
Filing Date :NA

(71)**Name of Applicant :**
1)EESAVYASA TECHNOLOGIES PVT. LTD.
Address of Applicant :PLOT NO: 79, PHASE - III, SVCIE, BALANAGAR, HYDERABAD, R.R. DISTRICT - 500 037 Andhra Pradesh India
(72)**Name of Inventor :**
1)D.P. CHAKRAVARTHY
2)BANDA RAVI SANKAR

(57) Abstract :
In this method of invention, highly compressed air cylinders are produced at nominal cost wherever required including rural areas, which can act as abundant power resource when connected to a small turbine, dynamo and a DC motor etc. The yield of compressed . air depends on the amount of pressure exerted using simple mechanical principles like screw rods, rock and pinion systems, pneumatic cylinders etc. Using this concept even 1000 psi can be easily achieved and used as a satellite power generation set in both commercial and domestic segments.

No. of Pages : 7 No. of Claims : 6

(12) PATENT APPLICATION PUBLICATION
(19) INDIA
(22) Date of filing of Application :29/04/2013
(21) Application No.1900/CHE/2013 A
(43) Publication Date : 07/11/2014

(54) Title of the invention : AN IMPROVED FRICTION PAD FOR AIR STARTER

(51) International classification :F16D21/06
(31) Priority Document No :NA
(32) Priority Date :NA
(33) Name of priority country :NA
(86) International Application No :NA
Filing Date :NA
(87) International Publication No : NA
(61) Patent of Addition to Application Number :NA
Filing Date :NA
(62) Divisional to Application Number :NA
Filing Date :NA

(71)**Name of Applicant :**
1)J. EBENEZER DANIEL
Address of Applicant :AERDC, HAL(DC), OLD MADRAS ROAD, BANGALORE - 560 093 Karnataka India
2)V. REDDY
3)MANOJ KUMAR MISHRA
(72)**Name of Inventor :**
1)V. REDDY
2)J. EBENEZER DANIEL
3)MANOJ KUMAR MISHRA

(57) Abstract :
This Friction Pad is used in clutch mechanism of jet engine air starter. The functional life of existing part is less due to premature wear and inconsistent sintered layer of friction material. This has resulted in early withdrawal of starters from service which is adding to increased repair and overhaul cost. The improved friction pad has an increased service life of approximately two times than the existing part for this application. This has been achieved by a new powder metal composition, redefined Powder metallurgy process and improved manufacturing process adopted.

No. of Pages : 7 No. of Claims : 4

(12) PATENT APPLICATION PUBLICATION
(19) INDIA
(22) Date of filing of Application :14/03/2013
(21) Application No.2049/CHENP/2013 A
(43) Publication Date : 07/11/2014

(54) Title of the invention : DECODING INSTRUCTIONS FROM MULTIPLE INSTRUCTION SETS

(51) International classification :G06F9/30
(31) Priority Document No :1017177.5
(32) Priority Date :12/10/2010
(33) Name of priority country :U.K.
(86) International Application No :PCT/GB2011/051848
Filing Date :29/09/2011
(87) International Publication No :WO 2012/049475
(61) Patent of Addition to Application Number :NA
Filing Date :NA
(62) Divisional to Application Number :NA
Filing Date :NA

(71)**Name of Applicant :**
1)ARM LIMITED
Address of Applicant :110 Fulbourn Road Cherry Hinton Cambridge CB1 9NJ U.K.
(72)**Name of Inventor :**
1)CRASKE Simon John

(57) Abstract :
A data processing apparatus method and computer program are described that are capable of decoding instructions from different instruction sets. The method comprising: receiving an instruction; if an operation code of said instruction is an operation code of an instruction from a base set of instructions decoding said instruction according to decode rules for said base set of instructions; and if said operation code of said instruction is an operation code of an instruction from at least one further set of instructions decoding said instruction according to a set of decode rules determined by an indicator value indicating which of said at least one further set of instructions is currently to be decoded.

No. of Pages : 27 No. of Claims : 21

(12) PATENT APPLICATION PUBLICATION
(19) INDIA
(22) Date of filing of Application :06/03/2013
(21) Application No.1816/CHENP/2013 A
(43) Publication Date : 07/11/2014

(54) Title of the invention : PROCESS FOR PREPARING AMINOADAMANTYL CARBAMATE DERIVATIVES

(51) International classification	:C07C269/06,A61K31/415,A61P3/10
(31) Priority Document No	:2010178584
(32) Priority Date	:09/08/2010
(33) Name of priority country	:Japan
(86) International Application No	:PCT/JP2011/068031
Filing Date	:08/08/2011
(87) International Publication No	:WO 2012/020724
(61) Patent of Addition to Application Number	:NA
Filing Date	:NA
(62) Divisional to Application Number	:NA
Filing Date	:NA

(71)**Name of Applicant :**
1)Shionogi & Co. Ltd.
Address of Applicant :1 8 Doshomachi 3 chome Chuo ku Osaka shi Osaka 5410045 Japan
(72)**Name of Inventor :**
1)NISHINO Yutaka
2)SHIMIZU Hideki
3)TSURITANI Takayuki
4)SUZUKI Natsuko
5)TAKAKI Mutsumi
6)KOBAYASHI Tatsuya
7)SAKAMOTO Hideaki

(57) Abstract :
A process for preparing aminoadamantyl carbamate derivatives useful as important intermediates for 11HSD 1 inhibitors is provided. A process for preparing acid addition salts of compounds represented by general formula (II) or solvates of the acid addition salts has been found said process being characterized by adding an acid to a mixture of syn and anti isomers of a compound represented by general formula (I) in the presence of a solvent and thereby separating an acid addition salt of a compound represented by general formula (II) or a solvate of the acid addition salt. In general formula (I) R and R are each independently hydrogen substituted or unsubstituted alkyl or the like; R and R are each independently hydrogen substituted or unsubstituted alkyl or the like; and R and R are each independently hydrogen halogen carboxy nitro substituted or unsubstituted alkyl or the like while in general formula (II) R R R R R and R are each as defined above.

No. of Pages : 114 No. of Claims : 26

(12) PATENT APPLICATION PUBLICATION
(19) INDIA
(22) Date of filing of Application :06/03/2013
(21) Application No.1817/CHENP/2013 A
(43) Publication Date : 07/11/2014

(54) Title of the invention : METHOD FOR TREATING WASTEWATERS FROM THE REPROCESSING OF CRUDE AROMATIC NITRO COMPOUNDS

(51) International classification :C02F1/04
(31) Priority Document No :10172647.9
(32) Priority Date :12/08/2010
(33) Name of priority country :EPO
(86) International Application No :PCT/EP2011/063835
Filing Date :11/08/2011
(87) International Publication No :WO 2012/025393
(61) Patent of Addition to Application Number :NA
Filing Date :NA
(62) Divisional to Application Number :NA
Filing Date :NA

(71)**Name of Applicant :**
1)BASF SE
Address of Applicant :67056 Ludwigshafen Germany
(72)**Name of Inventor :**
1)LESCHINSKI Julia
2)DENISSEN Leo
3)HECK Ludwig E.
4)GAMMER Peter
5)VAN DE VOORDE Bart
6)HEULER Andreas
7)NETO Samuel

(57) Abstract :
The invention relates to a method for reclaiming wastewaters which are obtained in the treatment of crude aromatic nitro compounds after the nitration of aromatic compounds comprising the following steps: (a) single stage or multistage washing of the crude aromatic nitro compound to obtain at least one organic phase and at least one aqueous phase and separating off the aqueous phase or aqueous phases wherein step (a) comprises the addition of a base which is different from ammonia and then (b) optionally removing organic components from at least some of the aqueous phase or aqueous phases obtained in step (a) by stripping preferably using steam then (c) removing by thermal and/or oxidative breakdown organic compounds from at least some of the aqueous phase or aqueous phases resulting from step (a) or step (b) then (d) stripping by distillation of ammonia from at least some of the aqueous phase or aqueous phases resulting from step (c) and then (e) optionally feeding at least some of the aqueous phase or aqueous phases resulting from step (d) to a biological wastewater treatment.

No. of Pages : 21 No. of Claims : 15

(12) PATENT APPLICATION PUBLICATION
(19) INDIA
(22) Date of filing of Application :15/01/2013
(21) Application No.193/CHE/2013 A
(43) Publication Date : 07/11/2014

(54) Title of the invention : SOLID-STATE IMAGE SENSOR

(51) International classification :G02F
(31) Priority Document No :2012-008447
(32) Priority Date :18/01/2012
(33) Name of priority country :Japan
(86) International Application No :NA
Filing Date :NA
(87) International Publication No : NA
(61) Patent of Addition to Application Number :NA
Filing Date :NA
(62) Divisional to Application Number :NA
Filing Date :NA

(71)**Name of Applicant :**
1)CANON KABUSHIKI KAISHA
Address of Applicant :30-2, SHIMOMARUKO 3-CHOME, OHTA-KU, TOKYO Japan
(72)**Name of Inventor :**
1)KOBAYASHI, MASAHIRO
2)TAKADA, HIDEAKI
3)ONO, TOSHIAKI

(57) Abstract :
A solid-state image sensor comprising a pixel array in which a plurality of pixels are arrayed in a matrix having a plurality of rows and a plurality of columns, wherein the pixel array includes a first wiring layer and a second wiring layer arranged above the first wiring layer, the first wiring layer includes first column signal lines arranged at the respective columns of the pixel array, and the second wiring layer includes second column signal lines arranged at the respective columns of the pixel array

No. of Pages : 53 No. of Claims : 11

(12) PATENT APPLICATION PUBLICATION
(19) INDIA
(22) Date of filing of Application :15/03/2013
(21) Application No.2096/CHENP/2013 A
(43) Publication Date : 07/11/2014

(54) Title of the invention : COMPOSITION FOR PREVENTING/CONTROLLING HARMFUL ARTHROPODS AND METHOD FOR PREVENTING/CONTROLLING HARMFUL ARTHROPODS

(51) International classification	:A01N43/40,A01N43/12,A01N43/16
(31) Priority Document No	:2010184723
(32) Priority Date	:20/08/2010
(33) Name of priority country	:Japan
(86) International Application No	:PCT/JP2011/068489
Filing Date	:08/08/2011
(87) International Publication No	:WO 2012/023531
(61) Patent of Addition to Application Number	:NA
Filing Date	:NA
(62) Divisional to Application Number	:NA
Filing Date	:NA

(71)**Name of Applicant :**
1)SUMITOMO CHEMICAL COMPANY LIMITED
Address of Applicant :27 1 Shinkawa 2 chome Chuo ku Tokyo 1048260 Japan
(72)**Name of Inventor :**
1)SAKAMOTO Norihisa
2)SAKAMOTO Emiko

(57) Abstract :
The disclosed composition for preventing/controlling harmful arthropods contains flonicamid fthalide and kasugamycin hydrochloride.

No. of Pages : 14 No. of Claims : 5

(12) PATENT APPLICATION PUBLICATION
(19) INDIA
(22) Date of filing of Application :15/03/2013
(21) Application No.2097/CHENP/2013 A
(43) Publication Date : 07/11/2014

(54) Title of the invention : ROTARY PISTON PUMP

(51) International classification :F04C2/08,F04C2/16,F04C11/00
(31) Priority Document No :20 2010 011 626.0
(32) Priority Date :20/08/2010
(33) Name of priority country :Germany
(86) International Application No:PCT/EP2011/064229
Filing Date :18/08/2011
(87) International Publication No :WO 2012/022784
(61) Patent of Addition to Application Number :NA
Filing Date :NA
(62) Divisional to Application Number :NA
Filing Date :NA

(71)**Name of Applicant :**
1)HUGO VOGELSANG MASCHINENBAU GMBH
Address of Applicant :Holthge 10 14 49632 Essen Germany
(72)**Name of Inventor :**
1)KRAMPE Paul

(57) Abstract :
The invention relates to a rotary piston pump (100) for conveying a fluid medium which contains solid matter comprising an inlet opening (111) and an outlet opening (112) for the medium to be conveyed having two rotary pistons (121 122) which are arranged in a pump housing (140) and which have rotary piston vanes which engage into one another wherein each of the two rotary pistons is fastened in a torsionally rigid manner to in each case one shaft (131) and can be driven by the respective shaft and wherein the two shafts are coupled to one another by means of a gearing arranged in a gearing housing (152). The invention relates in particular to a rotary piston pump in which the inlet opening and the outlet opening are arranged on a connecting housing (151).

No. of Pages : 43 No. of Claims : 15

(12) PATENT APPLICATION PUBLICATION
(19) INDIA
(22) Date of filing of Application :24/12/2012
(21) Application No.10754/CHENP/2012 A
(43) Publication Date : 07/11/2014

(54) Title of the invention : BATTERY DETERIORATION DETECTION DEVICE BATTERY DETERIORATION DETECTION METHOD AND PROGRAM THEREFOR

(51) International classification :G01R31/36
(31) Priority Document No :2010176565
(32) Priority Date :05/08/2010
(33) Name of priority country :Japan
(86) International Application No :PCT/JP2011/067709
Filing Date :02/08/2011
(87) International Publication No :WO 2012/018028
(61) Patent of Addition to Application Number :NA
Filing Date :NA
(62) Divisional to Application Number :NA
Filing Date :NA

(71)**Name of Applicant :**
1)MITSUBISHI HEAVY INDUSTRIES LTD.
Address of Applicant :16 5 Konan 2 chome Minato ku Tokyo 1088215 Japan
2)MITSUBISHI HEAVY INDUSTRIES MACHINERY TECHNOLOGY CORPORATION
(72)**Name of Inventor :**
1)MORITA Katsuaki
2)YOSHIOKA Nobuo
3)TOYOHARA Takashi

(57) Abstract :
A battery deterioration detection device of the present invention is characterized by being provided with an internal resistance value calculation unit which acquires a current value inputted to and outputted from a storage battery and a voltage value applied to the storage battery and calculates the present internal resistance value of the storage battery using the fluctuation range of the current value when the current value fluctuates by a given value or more and the fluctuation range of the voltage value at that time and a battery deterioration information processing unit which calculates the deterioration rate of the storage battery at the present temperature of the storage battery by dividing the present internal resistance value by an internal resistance initial value corresponding to the present temperature of the storage battery and outputs the deterioration rate to a monitor device.

No. of Pages : 32 No. of Claims : 7

(12) PATENT APPLICATION PUBLICATION
(19) INDIA
(22) Date of filing of Application :20/03/2013
(21) Application No.1207/CHE/2013 A
(43) Publication Date : 07/11/2014

(54) Title of the invention : SYSTEM AND METHOD FOR LOCALLY OPTIMIZED MANAGING OF NETWORK APPLIANCES IN A CLOSED AREA NETWORK

(51) International classification :H02J
(31) Priority Document No :NA
(32) Priority Date :NA
(33) Name of priority country :NA
(86) International Application No :NA
Filing Date :NA
(87) International Publication No : NA
(61) Patent of Addition to Application Number :NA
Filing Date :NA
(62) Divisional to Application Number :NA
Filing Date :NA

(71)**Name of Applicant :**
1)INFOSYS LIMITED
Address of Applicant :IP CELL, PLOT NO.44, ELECTRONIC CITY, HOSUR ROAD, BANGALORE - 560 100 Karnataka India
(72)**Name of Inventor :**
1)ANIMIKH GHOSH
2)KETAN PATIL
3)SUNIL KUMAR VUPPALA

(57) Abstract :
A system and method for generating an optimized operating schedule for a plurality of heterogeneous wireless network appliances managed by a gateway device in a closed area network is disclosed. An amount of energy consumed by each network appliance as well as preassigned operational priority values assigned to each network appliance per time slot over the designated time period is considered. A plurality of proposed operation schedules are iteratively generated, wherein each proposed operation schedule selectively assigns the network appliances to operate at various time slots based on their assigned operational priority values. An optimized schedule is selected which has a determined lowest aggregated total utility cost and a greatest aggregated operations value for the network appliances in the subset. The selected optimized schedule is then implemented by the gateway device to manage operation of the network appliances in the closed area network.

No. of Pages : 37 No. of Claims : 21

(12) PATENT APPLICATION PUBLICATION
(19) INDIA
(22) Date of filing of Application :06/03/2013
(21) Application No.1824/CHENP/2013 A
(43) Publication Date : 07/11/2014

(54) Title of the invention : SCOOTER TYPE ELECTRIC VEHICLE

(51) International classification :B62J11/00
(31) Priority Document No :2010220725
(32) Priority Date :30/09/2010
(33) Name of priority country :Japan
(86) International Application No :PCT/JP2011/072077
Filing Date :27/09/2011
(87) International Publication No :WO 2012/043562
(61) Patent of Addition to Application Number :NA
Filing Date :NA
(62) Divisional to Application Number :NA
Filing Date :NA

(71)**Name of Applicant :**
1)HONDA MOTOR CO. LTD.
Address of Applicant :1 1 Minami Aoyama 2 chome Minato ku Tokyo 1078556 Japan
(72)**Name of Inventor :**
1)WATANABE Takato
2)YAGISAWA Katsuichi
3)MATSUO Hisashi
4)INAIZUMI Hideki

(57) Abstract :
A scooter type electric vehicle is provided with a battery unit comprising at least three batteries which are positioned next to one another in the width direction of a vehicle and also are connected in series to supply power to a drive motor. The central battery from among these batteries is positioned in the centre of the vehicle and is positioned higher than the side batteries which are positioned at the outer sides of the vehicle. A breaker which is on a connection path for connecting the central battery is attached to the central battery.

No. of Pages : 48 No. of Claims : 8

(12) PATENT APPLICATION PUBLICATION
(19) INDIA
(22) Date of filing of Application :15/03/2013
(21) Application No.2101/CHENP/2013 A
(43) Publication Date : 07/11/2014

(54) Title of the invention : COUNTERWEIGHT DEVICE FOR LIFT

(51) International classification :B66B11/00,B66B17/12
(31) Priority Document No :201010259332.3
(32) Priority Date :20/08/2010
(33) Name of priority country :China
(86) International Application No :PCT/CN2011/072576
Filing Date :10/04/2011
(87) International Publication No :WO 2012/022156
(61) Patent of Addition to Application Number :NA
Filing Date :NA
(62) Divisional to Application Number :NA
Filing Date :NA

(71)**Name of Applicant :**
1)CANNY ELEVATOR CO. LTD.
Address of Applicant :No.88 (LUXU) Linhu Economic Development Zone Wujiang Jiangsu 215213 China
(72)**Name of Inventor :**
1)WANG Youlin
2)ZHANG Jianhong
3)YU Cheng
4)WANG Liangliang

(57) Abstract :
A counterweight device for a lift comprises a counterweight frame counterweight blocks (2) and pressing plates (1) for the counterweight blocks. The counterweight frame is a rectangular frame composed of two long vertical beams (4) an upper side beam (3) and a lower side beam (5). A cross drawing plate (7) is fixed between the two long vertical beams (4). A short vertical beam (6) is connected between the cross drawing plate (7) and the middle part of the lower side beam (5). Two counterweight guide slots are formed between the short vertical beam (6) and the two long vertical beams (4). The counterweight blocks (2) are superposed in the two guide slots from bottom to top respectively. Two pressing plates (1) for the counterweight blocks are fixed between the short vertical beam (6) and the two long vertical beams (4) at an upper end of the counterweight blocks (2) and stride over the two guide slots respectively.

No. of Pages : 11 No. of Claims : 7

(12) PATENT APPLICATION PUBLICATION
(19) INDIA
(22) Date of filing of Application :12/03/2013
(21) Application No.1037/CHE/2013 A
(43) Publication Date : 07/11/2014

(54) Title of the invention : MULTI-PRODUCT MULTI-FUEL AGRI DRYER

(51) International classification :F26B
(31) Priority Document No :NA
(32) Priority Date :NA
(33) Name of priority country :NA
(86) International Application No :NA
Filing Date :NA
(87) International Publication No : NA
(61) Patent of Addition to Application Number :NA
Filing Date :NA
(62) Divisional to Application Number :NA
Filing Date :NA

(71)**Name of Applicant :**
1)C.P. PHILIPOSE
Address of Applicant :OLANGATTU HOUSE, ERUMELY KARA, KUMARAPURAM P.O., ERNAKULAM DISTRICT, PIN - 683 565 Kerala India
(72)**Name of Inventor :**
1)C.P. PHILIPOSE

(57) Abstract :
A portable multi-fuel agricultural products drying device for batch drying various sized agricultural products is provided. The drying process is carried out by forcing preheated air through the material to be dried. The drying device includes a plurality of trays, an automatic variable speed air drafting fan, a heating source, a lockable door, a rodent preventing net and a control circuit along with a backup battery to provide a self-contained compact unit.

No. of Pages : 14 No. of Claims : 11

(12) PATENT APPLICATION PUBLICATION
(19) INDIA
(22) Date of filing of Application :20/02/2013
(21) Application No.1370/CHENP/2013 A
(43) Publication Date : 07/11/2014

(54) Title of the invention : RECORDING MATERIAL USING PHENOL COMPOUND

(51) International classification :C07C231/02,B41M5/333,C07C233/07
(31) Priority Document No :2010195363
(32) Priority Date :01/09/2010
(33) Name of priority country :Japan
(86) International Application No :PCT/JP2011/004782
Filing Date :29/08/2011
(87) International Publication No :WO 2012/029276
(61) Patent of Addition to Application Number :NA
Filing Date :NA
(62) Divisional to Application Number :NA
Filing Date :NA

(71)**Name of Applicant :**
1)Nippon Soda Co. Ltd.
Address of Applicant :2 1 Ohtemachi 2 chome Chiyoda ku Tokyo 1008165 Japan
(72)**Name of Inventor :**
1)SAKAI Hiroshi
2)KINOSHITA Shuntaro
3)KONDO Tadahiro
4)JYUJYO Kazumi

(57) Abstract :
The present invention addresses the problem of providing a recording material or sheet which is excellent not only in the whiteness of non image areas but also in the storage of non image areas and images and which exhibits excellent color development sensitivity. In order to solve the problem a phenol compound which is represented by general formula (I) and which is characterized by having a chromaticness index b of 10 or less is used as a recording material. It is preferable that the phenol compound further has a brightness by Hunter of 75 or more. In general formula (I) R is hydroxyl or a halogen atom; p is 0 or an integer of 1 to 5; R and R are each independently a hydrogen atom or C alkyl; R is a hydrogen atom C alkyl optionally substituted phenyl or optionally substituted benzyl; and each wavy line represents E or Z configuration or a mixture of both.

No. of Pages : 55 No. of Claims : 7

(12) PATENT APPLICATION PUBLICATION
(19) INDIA
(22) Date of filing of Application :21/02/2013
(21) Application No.1427/CHENP/2013 A
(43) Publication Date : 07/11/2014

(54) Title of the invention : DETERGENT COMPOSITION COMPRISING MANGANESE OXALATE

(51) International classification :C11D17/00,C11D3/39,C11D3/33
(31) Priority Document No :1014328.7
(32) Priority Date :27/08/2010
(33) Name of priority country :U.K.
(86) International Application No :PCT/GB2011/051556
Filing Date :18/08/2011
(87) International Publication No :WO 2012/025740
(61) Patent of Addition to Application Number :NA
Filing Date :NA
(62) Divisional to Application Number :NA
Filing Date :NA

(71)**Name of Applicant :**
1)RECKITT BENCKISER N.V.
Address of Applicant :Siriusdreef 14 NL 2132 WT Hoofddorp Netherlands
2)RECKITT & COLMAN (OVERSEAS) LIMITED
(72)**Name of Inventor :**
1)CABIROL Marine
2)GRAF Nicole
3)PREUSCHEN Judith

(57) Abstract :
The present invention provides a detergent composition comprising MGDA managanese oxalate and a bleach compound. In particular the invention provides detergent compositions that are suitable for automatic dishwashing (ADW).

No. of Pages : 25 No. of Claims : 15

(12) PATENT APPLICATION PUBLICATION
(19) INDIA
(22) Date of filing of Application :26/02/2013
(21) Application No.1538/CHENP/2013 A
(43) Publication Date : 07/11/2014

(54) Title of the invention : TUBE YOKE FOR A DRIVESHAFT ASSEMBLY

(51) International classification :F16D3/38
(31) Priority Document No :61/377546
(32) Priority Date :27/08/2010
(33) Name of priority country :U.S.A.
(86) International Application No :PCT/US2011/001499
Filing Date :25/08/2011
(87) International Publication No :WO 2012/026983
(61) Patent of Addition to Application Number :NA
Filing Date :NA
(62) Divisional to Application Number :NA
Filing Date :NA

(71)**Name of Applicant :**
1)DANA AUTOMOTIVE SYSTEMS GROUP LLC
Address of Applicant :3939 Technology Drive PO Box 1000 Maumee OH 43537 U.S.A.
(72)**Name of Inventor :**
1)EVERSOLE Philip A.
2)CORPUS Christopher B.
3)JONES Bradley S.
4)GARRETSON Blake T.

(57) Abstract :
A tube yoke for a driveshaft assembly is provided. The tube yoke includes a tube seat (42) and a pair of lugs (44). The lugs outwardly project from the tube seat. The tube seat comprises a base (48) a wall (46) and a plurality of stiffening ribs (68). The stiffening ribs extend between an inner surface (60) of the base (48) and an end surface (51) of the wall (46). A portion of the stiffening ribs (68) between the inner surface of the base and the end surface of the wall gradually decreases in thickness. A method of reducing the radial deformation of the tube yoke of a driveshaft assembly is also provided.

No. of Pages : 29 No. of Claims : 20

(12) PATENT APPLICATION PUBLICATION
(19) INDIA
(22) Date of filing of Application :11/03/2013
(21) Application No.1937/CHENP/2013 A
(43) Publication Date : 07/11/2014

(54) Title of the invention : PROCESS FOR PRODUCING GRANULES COMPRISING ONE OR MORE COMPLEXING AGENT SALTS

(51) International classification :C07C227/42,B01J2/06,B01J8/18
(31) Priority Document No :10180031.6
(32) Priority Date :27/09/2010
(33) Name of priority country :EPO
(86) International Application No :PCT/EP2011/066376
Filing Date :21/09/2011
(87) International Publication No :WO 2012/041741
(61) Patent of Addition to Application Number :NA
Filing Date :NA
(62) Divisional to Application Number :NA
Filing Date :NA

(71)**Name of Applicant :**
1)BASF SE
Address of Applicant :67056 Ludwigshafen Germany
(72)**Name of Inventor :**
1)BLEI Stefan
2)SCH–NHERR Michael
3)WEBER Franz
4)BECKER Francois

(57) Abstract :
What is proposed is a process for producing granules comprising one or more complexing agent salts of the general formula (I) formed from an aqueous starting solution comprising the one or more complexing agent salts in a concentration of 10 to 80% by weight based on the total weight of the aqueous starting solution in a beam apparatus.

No. of Pages : 15 No. of Claims : 11

(12) PATENT APPLICATION PUBLICATION
(19) INDIA
(22) Date of filing of Application :15/03/2013
(21) Application No.2106/CHENP/2013 A
(43) Publication Date : 07/11/2014

(54) Title of the invention : COMPOSITION FOR PREVENTING/CONTROLLING HARMFUL ARTHROPODS AND METHOD FOR PREVENTING/CONTROLLING HARMFUL ARTHROPODS

(51) International classification	:A01N43/40,A01N37/24,A01N43/16
(31) Priority Document No	:2010184721
(32) Priority Date	:20/08/2010
(33) Name of priority country	:Japan
(86) International Application No	:PCT/JP2011/068486
Filing Date	:08/08/2011
(87) International Publication No	:WO 2012/023529
(61) Patent of Addition to Application Number	:NA
Filing Date	:NA
(62) Divisional to Application Number	:NA
Filing Date	:NA

(71)**Name of Applicant :**
1)SUMITOMO CHEMICAL COMPANY LIMITED
Address of Applicant :27 1 Shinkawa 2 chome Chuo ku Tokyo 1048260 Japan
(72)**Name of Inventor :**
1)SAKAMOTO Norihisa
2)SAKAMOTO Emiko

(57) Abstract :
The disclosed composition for preventing/controlling harmful arthropods contains: flonicamid; tricyclazole; and at least one type of compound for preventing/controlling plant diseases that is selected from the group consisting of flutolanil pencycuron and kasugamycin.

No. of Pages : 15 No. of Claims : 5

(12) PATENT APPLICATION PUBLICATION
(19) INDIA
(22) Date of filing of Application :01/03/2013
(21) Application No.1717/CHENP/2013 A
(43) Publication Date : 07/11/2014

(54) Title of the invention : PROCESS FOR PRODUCING CARBON COMPRISING COMPOSITE

(51) International classification :C07C51/41
(31) Priority Document No :10174939.8
(32) Priority Date :01/09/2010
(33) Name of priority country :EPO
(86) International Application No :PCT/IB2011/053646
Filing Date :18/08/2011
(87) International Publication No :WO 2012/028989
(61) Patent of Addition to Application Number :NA
Filing Date :NA
(62) Divisional to Application Number :NA
Filing Date :NA

(71)**Name of Applicant :**
1)BASF SE
Address of Applicant :67056 Ludwigshafen Germany
2)BASF (CHINA) COMPANY LIMITED
(72)**Name of Inventor :**
1)TRUKHAN Natalia
2)MLLER Ulrich
3)LEUNG Emi
4)PANCHENKO Alexander
5)JANSSEN Nicole

(57) Abstract :
A process for producing a carbon comprising composite is provided wherein a porous metal organic framework comprising at least one at least bidentate organic compound coordinated to at least one metal ion is pyrolyzed under a protective gas atmosphere and the at least one at least bidentate organic compound is nitrogen free. Composites which can be obtained in this way and sulfur electrodes comprising these and also their uses are further provided.

No. of Pages : 33 No. of Claims : 15

(12) PATENT APPLICATION PUBLICATION
(19) INDIA
(22) Date of filing of Application :07/03/2013
(21) Application No.1837/CHENP/2013 A
(43) Publication Date : 07/11/2014

(54) Title of the invention : METHOD FOR MANUFACTURING CONNECTOR TERMINAL AND CONNECTOR TERMINAL

(51) International classification :H01R13/03,H01R43/16,H01R13/115
(31) Priority Document No :2010203387
(32) Priority Date :10/09/2010
(33) Name of priority country :Japan
(86) International Application No :PCT/JP2011/071169
Filing Date :09/09/2011
(87) International Publication No :WO 2012/033231
(61) Patent of Addition to Application Number :NA
Filing Date :NA
(62) Divisional to Application Number :NA
Filing Date :NA

(71)**Name of Applicant :**
1)YAZAKI CORPORATION
Address of Applicant :4 28 Mita 1 chome Minato ku Tokyo 1088333 Japan
2)HONDA MOTOR CO. LTD.
(72)**Name of Inventor :**
1)SUGIE Naoto
2)MIYAKAWA Tomoyuki
3)OHTAKA Kazuto
4)HOMMA Hideki
5)MITANI Tetsuya
6)SHINMURA Masaru

(57) Abstract :
To provide a connector terminal and a method for manufacturing a connector terminal which can apply a gold plating to an electric contact part and a tin plating to an electric wire crimping part without carrying out a partial plating by masking even when the bent electric contact part is arranged on the same plane as a plane of a chain part. In a stamping step when a stamping terminal mold formed as a connector terminal is stamped an electric wire crimping part is stamped and extended from a chain part in a direction perpendicular to a feeding direction an electric contact part is stamped and extended from the electric wire crimping part in a direction parallel to the feeding direction and a range to which a gold plating is applied by a gold plating step is not overlapped on a range to which a tin plating is applied by a tin plating step in the feeding direction.

No. of Pages : 22 No. of Claims : 3

(12) PATENT APPLICATION PUBLICATION
(19) INDIA
(22) Date of filing of Application :08/03/2013
(21) Application No.1893/CHENP/2013 A
(43) Publication Date : 07/11/2014

(54) Title of the invention : COMPUTER SYSTEM AND COMMUNICATION METHOD IN COMPUTER SYSTEM

(51) International classification :H04L12/56,H04L12/44
(31) Priority Document No :2010202468
(32) Priority Date :09/09/2010
(33) Name of priority country :Japan
(86) International Application No :PCT/JP2011/070137
Filing Date :05/09/2011
(87) International Publication No :WO 2012/033041
(61) Patent of Addition to Application Number :NA
Filing Date :NA
(62) Divisional to Application Number :NA
Filing Date :NA

(71)**Name of Applicant :**
1)NEC CORPORATION
Address of Applicant :7 1 Shiba 5 chome Minato ku Tokyo 1088001 Japan
(72)**Name of Inventor :**
1)TAKASHIMA Masanori
2)KASE Tomohiro
3)UENO Hiroshi
4)MASUDA Takahisa
5)YUN Suhun

(57) Abstract :
A computer system according to the present invention is provided with: a controller for setting the flow entry for each of a plurality of switches before packets are transmitted from a plurality of nodes; and a switch for transmitting received packets which include destination addresses specified by the flow entry to destination devices specified by the flow entry regardless of the transmission origin addresses of the received packets.

No. of Pages : 44 No. of Claims : 10

(12) PATENT APPLICATION PUBLICATION
(19) INDIA
(22) Date of filing of Application :20/03/2013
(21) Application No.2218/CHENP/2013 A
(43) Publication Date : 07/11/2014

(54) Title of the invention : A CONTROL APPARATUS A COMMUNICATION SYSTEM A COMMUNICATION METHOD AND A RECORDING MEDIUM HAVING RECORDED THEREON A COMMUNICATION PROGRAM

(51) International classification :H04L12/56,H04M3/00
(31) Priority Document No :2010212477
(32) Priority Date :22/09/2010
(33) Name of priority country :Japan
(86) International Application No :PCT/JP2011/064991
Filing Date :23/06/2011
(87) International Publication No :WO 2012/039176
(61) Patent of Addition to Application Number :NA
Filing Date :NA
(62) Divisional to Application Number :NA
Filing Date :NA

(71)**Name of Applicant :**
1)NEC CORPORATION
Address of Applicant :7 1 Shiba 5 chome Minato ku Tokyo 1088001 Japan
(72)**Name of Inventor :**
1)AKIYOSHI Ippei

(57) Abstract :
A communication destination is fixed and cannot be arbitrarily selected. [Solution to Problem] A control apparatus for controlling a network comprises a path control means for selecting a communication apparatus having an identifier as a destination communication apparatus among a communication apparatus group based on a connection relationship between the communication apparatus group which is connected to the network and includes communication apparatuses each having the same identifier and a source communication apparatus which performs communication using the identifier as a destination address and setting a process corresponding to a path from the source communication apparatus to the selected destination communication apparatus to a transfer apparatus in the network.

No. of Pages : 60 No. of Claims : 36

(12) PATENT APPLICATION PUBLICATION
(19) INDIA
(22) Date of filing of Application :20/03/2013
(21) Application No.2219/CHENP/2013 A
(43) Publication Date : 07/11/2014

(54) Title of the invention : RECORDING MATERIAL CONVEYANCE APPARATUS AND IMAGE FORMING APPARATUS

(51) International classification :B65H29/56,B65H29/52,G03G15/14
(31) Priority Document No :2010187824
(32) Priority Date :25/08/2010
(33) Name of priority country :Japan
(86) International Application No :PCT/JP2011/062063
Filing Date :26/05/2011
(87) International Publication No :WO 2012/026171
(61) Patent of Addition to Application Number :NA
Filing Date :NA
(62) Divisional to Application Number :NA
Filing Date :NA

(71)**Name of Applicant :**
1)SHARP KABUSHIKI KAISHA
Address of Applicant :22 22 Nagaike cho Abeno ku Osaka shi Osaka 5458522 Japan
(72)**Name of Inventor :**
1)MURAKAMI Susumu

(57) Abstract :
A recording material conveyance apparatus is provided with: a detachment claw (21) which is in contact with one roller (62) of a first pair of rollers; and a support member (22) which supports a bent recording material when a jam occurs. The support member (22) is provided with a support portion (221) which is positioned farther from the detachment claw (21) than a virtual line (C) passing through a nip portion (6N) of the first pair of rollers and the surface of the conveyance path side of the detachment claw (21) and the support portion (221) supports the bent recording material when a jam occurs. The recording material conveyance apparatus is further provided with a conveyance guide (23) which is provided on the down stream side of the support member (22) and which is moved in the direction of pressure by a pressing force caused when the bent recording material makes contact therewith.

No. of Pages : 43 No. of Claims : 5

(12) PATENT APPLICATION PUBLICATION
(19) INDIA
(22) Date of filing of Application :14/03/2013
(21) Application No.1102/CHE/2013 A
(43) Publication Date : 07/11/2014

(54) Title of the invention : MEASUREMENT METHOD USING ENZYME

(51) International classification :G01N
(31) Priority Document No :2012-058516
(32) Priority Date :15/03/2012
(33) Name of priority country :Japan
(86) International Application No :NA
Filing Date :NA
(87) International Publication No : NA
(61) Patent of Addition to Application Number :NA
Filing Date :NA
(62) Divisional to Application Number :NA
Filing Date :NA

(71)**Name of Applicant :**
1)ARKRAY, INC.
Address of Applicant :57, NISHIAKETA-CHO, HIGASHIKUJO, MINAMI-KU, KYOTO-SHI, KYOTO, 601-8045 Japan
2)KIKKOMAN BIOCHEMIFA COMPANY
(72)**Name of Inventor :**
1)SUGIYAMA, KOJI
2)YONEHARA, SATOSHI
3)SHIMOJI, KAZUHIKO

(57) Abstract :
A method for measuring an analyte is described that includes the steps of- i) preparing a reagent (D) in which an enzyme (A) and an enzyme (B) coexist in the absence of the analyte; ii) bringing the analyte into contact with the enzyme (A) and the enzyme (B) so that the enzyme (A) acts on the analyte to produce a product (E), on which the enzyme (B) does not substantially act, from the analyte, iii) producing a product (C) by allowing the enzyme (A) or an enzyme (F) that is different from the enzyme (A) that acts on the analyte to produce a product (C) to act on the analyte and/or the product (E); and iv) detecting the product (C) by the enzyme (B).

No. of Pages : 34 No. of Claims : 19

(12) PATENT APPLICATION PUBLICATION
(19) INDIA
(22) Date of filing of Application :28/02/2013
(21) Application No.1644/CHENP/2013 A
(43) Publication Date : 07/11/2014

(54) Title of the invention : LAMP

(51) International classification :F21V3/04,F21V9/08,F21V11/00
(31) Priority Document No :10 2010 033 141.4
(32) Priority Date :03/08/2010
(33) Name of priority country :Germany
(86) International Application No :PCT/EP2011/002981
Filing Date :16/06/2011
(87) International Publication No:WO 2012/016609
(61) Patent of Addition to Application Number :NA
Filing Date :NA
(62) Divisional to Application Number :NA
Filing Date :NA

(71)**Name of Applicant :**
1)COOPER CROUSE HINDS GMBH
Address of Applicant :Senator Schwartz Ring 26 59494 Soest Germany
(72)**Name of Inventor :**
1)BURMEISTER Jens

(57) Abstract :
The invention relates to a lamp (1) comprising at least a lamp housing (2) and a transparent or translucent protective tray/cover (3). Lighting means (4) and associated electrical or electronic components (5) are arranged in the lamp housing. The protective tray/cover is in particular detachably connected to the lamp housing. In order to be able to variably limit the emitted light both in a spectral manner and in a spatial manner by means of a simple design a filter device (6 9) for spectrally filtering the light emitted by the lighting means and/or a glare limiting device (7) is associated with the protective tray/cover (3).

No. of Pages : 15 No. of Claims : 17

(12) PATENT APPLICATION PUBLICATION
(19) INDIA
(22) Date of filing of Application :06/03/2013
(21) Application No.1820/CHENP/2013 A
(43) Publication Date : 07/11/2014

(54) Title of the invention : CONTAINER HAVING A DETECTION DEVICE FOR DETERMINING A CONDITION OF THE CONTAINER AND MONITORING SYSTEM FOR DYNAMIC CONDITION MONITORING HAVING AT LEAST ONE SUCH CONTAINER

(51) International classification :G01F23/292,G06T7/00
(31) Priority Document No :10 2010 034 176.2
(32) Priority Date :12/08/2010
(33) Name of priority country :Germany
(86) International Application No :PCT/EP2011/003894
Filing Date :03/08/2011
(87) International Publication No :WO 2012/019734
(61) Patent of Addition to Application Number :NA
Filing Date :NA
(62) Divisional to Application Number :NA
Filing Date :NA

(71)**Name of Applicant :**
1)WRTH ELEKTRONIK ICS GMBH & CO. KG
Address of Applicant :Zeilbaumweg 15 74613 –hringen Germany
(72)**Name of Inventor :**
1)FABER Albrecht
2)HOFFMANN Franz Josef
3)WITTIG Klaus

(57) Abstract :
The invention relates to a container for transporting and/or storing objects. Such a container according to the invention comprises a detection device in order to determine information about the holding condition and/or the fill level of the container. The detection device is able to detect differing light intensities in the region of the inner walls of the container and to generate corresponding sensor signals. Furthermore an interface for connecting to a signal processing device is provided in which image information about the fill level and/or holding condition of the container is generated on the basis of the sensor signals.

No. of Pages : 54 No. of Claims : 16

(12) PATENT APPLICATION PUBLICATION
(19) INDIA
(22) Date of filing of Application :24/03/2014
(21) Application No.2230/CHENP/2014 A
(43) Publication Date : 07/11/2014

(54) Title of the invention : SAWTOOTH STRUCTURE AND TOY BLOCK COMPRISING THE STRUCTURE

(51) International classification :A63H33/04,A63H33/08,A63H33/10
(31) Priority Document No :1020110096253
(32) Priority Date :23/09/2011
(33) Name of priority country :Republic of Korea
(86) International Application No :PCT/KR2012/007536
Filing Date :20/09/2012
(87) International Publication No :WO 2013/042953
(61) Patent of Addition to Application Number :NA
Filing Date :NA
(62) Divisional to Application Number :NA
Filing Date :NA

(71)**Name of Applicant :**
1)SYNTHIA JAPAN CO.LTD.
Address of Applicant :1 53 3 101 Izumi Suginami ku Tokyo Japan
2)KAJIN GROUP PTE. LTD.
(72)**Name of Inventor :**
1)KIM Sang Hoon

(57) Abstract :
The present invention relates to a sawtooth structure in which an external sawtooth structure and an internal sawtooth structure engage with each other to support a fine joint angle adjustment function and to a toy block comprising such structure. A sawtooth structure of the present invention comprises an external sawtooth structure and an internal sawtooth structure wherein the external sawtooth structure has an inner surface with one or more areas on which an inner sawtooth portion of the external sawtooth structure containing at least two or more inner sawteeth of the external sawtooth structure is formed and the internal sawtooth structure has an outer surface with one or more areas on which an outer sawtooth portion of the internal sawtooth structure that corresponds to the inner sawtooth portion of the external sawtooth structure and that contains at least two or more outer sawteeth of the internal sawtooth structure is formed. Thus the coupling angle of the blocks to be coupled by the magnetic force of the magnet can be finely adjusted and as the coupling angle of the blocks is finely adjusted the coupled surfaces of the blocks are smooth.

No. of Pages : 51 No. of Claims : 34

(12) PATENT APPLICATION PUBLICATION
(19) INDIA
(22) Date of filing of Application :01/03/2013
(21) Application No.1694/CHENP/2013 A
(43) Publication Date : 07/11/2014

(54) Title of the invention : P2X4 RECEPTOR ANTAGONIST

(51) International classification :C07D239/70,A61K31/517,A61P25/04
(31) Priority Document No :2010174240
(32) Priority Date :03/08/2010
(33) Name of priority country :Japan
(86) International Application No :PCT/JP2011/067028
Filing Date :27/07/2011
(87) International Publication No :WO 2012/017876
(61) Patent of Addition to Application Number :NA
Filing Date :NA
(62) Divisional to Application Number :NA
Filing Date :NA

(71)**Name of Applicant :**
1)NIPPON CHEMIPHAR CO. LTD.
Address of Applicant :2 3 Iwamoto cho 2 chome Chiyoda ku Tokyo 1010032 Japan
(72)**Name of Inventor :**
1)USHIODA Masatoshi
2)SAKUMA Shogo
3)IMAI Toshiyasu
4)INOUE Kazuhide

(57) Abstract :
The present invention uses a compound represented by general formula (II) or a pharmacologically acceptable salt thereof as a P2X4 receptor antagonist. (In the formula R11 and R12 each represents a hydrogen atom an alkyl group having 1 8 carbon atoms or the like; R13 represents a hydrogen atom an alkyl group having 1 8 carbon atoms or the like; R14 represents an alkoxy group having 1 8 carbon atoms a hydroxyl group a cyano group an optionally substituted heterocyclic group or the like; and AA represents a naphthalene ring or the like.)

No. of Pages : 51 No. of Claims : 17

(12) PATENT APPLICATION PUBLICATION
(19) INDIA
(22) Date of filing of Application :01/03/2013
(21) Application No.1696/CHENP/2013 A
(43) Publication Date : 07/11/2014

(54) Title of the invention : PROCESS OF TRANSFECTING PLANTS

(51) International classification :C12N15/82
(31) Priority Document No :10008267.6
(32) Priority Date :07/08/2010
(33) Name of priority country :EPO
(86) International Application No :PCT/EP2011/002279
Filing Date :06/05/2011
(87) International Publication No :WO 2012/019660
(61) Patent of Addition to Application Number :NA
Filing Date :NA
(62) Divisional to Application Number :NA
Filing Date :NA

(71)**Name of Applicant :**
1)NOMAD BIOSCIENCE GMBH
Address of Applicant :T¼rkenstr. 16 80333 Munich Germany
(72)**Name of Inventor :**
1)GIRITCH Anatoli
2)SYMONENKO Yuri
3)HAHN Simone
4)TIEDE Doreen
5)SHVARTS Anton
6)ROEMER Patrick
7)GLEBA Yuri

(57) Abstract :
A process of transfecting a plant comprising spraying parts of said plant with an aqueous suspension containing cells of an Agrobacterium strain and at least one abrasive suspended in said suspension said Agrobacterium strain comprising a DNA molecule comprising a nucleic acid construct containing a DNA sequence of interest to be transfected into the plant.

No. of Pages : 128 No. of Claims : 15

(12) PATENT APPLICATION PUBLICATION
(19) INDIA
(22) Date of filing of Application :06/03/2013
(21) Application No.1814/CHENP/2013 A
(43) Publication Date : 07/11/2014

(54) Title of the invention : RELAY NODE DEVICE AUTHENTICATION MECHANISM

(51) International classification :H04L29/06
(31) Priority Document No :2010204863
(32) Priority Date :13/09/2010
(33) Name of priority country :Japan
(86) International Application No :PCT/JP2011/065234
Filing Date :24/06/2011
(87) International Publication No :WO 2012/035850
(61) Patent of Addition to Application Number :NA
Filing Date :NA
(62) Divisional to Application Number :NA
Filing Date :NA

(71)**Name of Applicant :**
1)NEC Corporation
Address of Applicant :7 1 Shiba 5 chome Minato ku Tokyo 1088001 Japan
(72)**Name of Inventor :**
1)ZHANG Xiaowei
2)PRASAD Anand Raghawa

(57) Abstract :
A solution of relay node authentication is proposed. The solution includes mutual authentication of relay node and relay UICC mutual authentication of relay node and network secure channel establishment between relay UICC and relay node. AKA procedure in TS 33.401 is re used so that no extra NAS message is needed. IMEI is sent to network in the initial NAS message according to which MME RN can retrieve RN s public key from HSS and perform access control for DeNB. MME RN will generate a session key based on IMSI IMEI and Kasme and encrypt it by RN s public key and send it to RN. UICC will also generate the same key and thus RN can authenticate both UICC and network. When the key or other parameters sent between UICC and RN do not match UICC or RN will send Authentication Reject message with a new cause to inform network.

No. of Pages : 28 No. of Claims : 40

(12) PATENT APPLICATION PUBLICATION
(19) INDIA
(22) Date of filing of Application :14/03/2013
(21) Application No.2027/CHENP/2013 A
(43) Publication Date : 07/11/2014

(54) Title of the invention : HEAT STORAGE DEVICE AND AIR CONDITIONER PROVIDED WITH SAID HEAT STORAGE DEVICE

(51) International classification :F25B13/00,F25B1/00
(31) Priority Document No :2010207495
(32) Priority Date :16/09/2010
(33) Name of priority country :Japan
(86) International Application No :PCT/JP2011/001136
Filing Date :28/02/2011
(87) International Publication No :WO 2012/035676
(61) Patent of Addition to Application Number :NA
Filing Date :NA
(62) Divisional to Application Number :NA
Filing Date :NA

(71)**Name of Applicant :**
1)PANASONIC CORPORATION
Address of Applicant :1006 Oaza Kadoma Kadoma shi Osaka 5718501 Japan
(72)**Name of Inventor :**
1)OKA Kouji
2)KURISUTANI Hiroharu
3)TOKURA Satoshi
4)KAMODA Hirokazu
5)BAMBA Masahiro
6)YAMAMOTO Noriaki

(57) Abstract :
Disclosed is a heat storage device configured from a heat storage tank (32) which accommodates a heat storage material that stores the heat generated in a compressor and a heat transfer sheet disposed between the compressor and the heat storage tank (32) for transmitting waste heat of the compressor efficiently to the heat storage tank (32). The heat storage tank (32) is provided with a heat transfer unit (45) in an area in contact with the heat transfer sheet. By providing grooves (46) on the surface in contact with the heat transfer sheet of the heat transfer unit (45) in order to discharge the air that builds up between the heat transfer sheet and the heat transfer unit (45) the air collected therebetween is discharged along the grooves (46) when the heat transfer sheet and the heat transfer unit (45) are in close contact making it possible to improve heat transfer efficiency without insulating air hindering heat transfer.

No. of Pages : 35 No. of Claims : 8

(12) PATENT APPLICATION PUBLICATION
(19) INDIA
(22) Date of filing of Application :21/03/2013
(21) Application No.2274/CHENP/2013 A
(43) Publication Date : 07/11/2014

(54) Title of the invention : IMAGE ENCODING METHOD AND APPARATUS, IMAGE DECONDING METHOD, AND APPARATUS, AND PROGRAMS THEREFOR

(51) International classification :H04N7/32,H04N13/02
(31) Priority Document No :2010218036
(32) Priority Date :29/09/2010
(33) Name of priority country :Japan
(86) International Application No :PCT/JP2011/071463
Filing Date :21/09/2011
(87) International Publication No :WO 2012/043330
(61) Patent of Addition to Application Number :NA
Filing Date :NA
(62) Divisional to Application Number :NA
Filing Date :NA

(71)**Name of Applicant :**
1)NIPPON TELEGRAPH AND TELEPHONE CORPORATION
Address of Applicant :3 1 Otemachi 2 chome Chiyodaku Tokyo 1008116 Japan
(72)**Name of Inventor :**
1)SHIMIZU Shinya
2)MATSUURA Norihiko

(57) Abstract :
An image encoding method whereby when images are transferred or stored the image frames are divided into processing regions of a predetermined size and encoding is performed while predicting the pixel value for each pixel for each region being processed. The method has: a step wherein for each photographic subject within a region being processed one pixel value representing each photographic subject is associated with a photographic subject identifier that identifies said transfer target and is set as the photographic subject pixel value; a step wherein a photographic subject map that indicates with a photographic subject identifier which transfer target is photographed in each pixel within the region being processed is generated from the pixel value and the transfer target pixel value for each pixel within the region being processed; a step wherein a predicted image is generated with respect to the region being processed by assigning the values of the transfer target pixel values to each pixel in accordance with the transfer target map; a step wherein the transfer target map is encoded; a step wherein the transfer target pixel values are encoded; and a step wherein an image signal with respect to the region being processed is prediction encoded using the predicted image.

No. of Pages : 74 No. of Claims : 26

(12) PATENT APPLICATION PUBLICATION
(19) INDIA
(22) Date of filing of Application :07/03/2013
(21) Application No.1866/CHENP/2013 A
(43) Publication Date : 07/11/2014

(54) Title of the invention : METHOD OF PREPARING ALKYL BUTYRATE FROM FERMENTED LIQUID USING MICROORGANISMS

(51) International classification	:C12P7/52,C07C59/01,C12N1/20
(31) Priority Document No	:1020100087990
(32) Priority Date	:08/09/2010
(33) Name of priority country	:Republic of Korea
(86) International Application No	:PCT/KR2011/006647
Filing Date	:08/09/2011
(87) International Publication No	:WO 2012/033359
(61) Patent of Addition to Application Number	:NA
Filing Date	:NA
(62) Divisional to Application Number	:NA
Filing Date	:NA

(71)**Name of Applicant :**
1)SK INNOVATION CO. LTD.
Address of Applicant :99 Seorin dongJongro gu Seoul 110 110 Republic of Korea
(72)**Name of Inventor :**
1)KANG Sin Young
2)KOO Min Su
3)CHO In Ho
4)LEE Joon Sik
5)PARK Eun Hee
6)PARK Joong Min
7)PARK Jae Yeon
8)CHU Young Hwan
9)KIM Dong Hyun
10)PARK Woo Chan
11)LEE Seung Yeop
12)RYU Jae Wook

(57) Abstract :
Disclosed is a method of preparing alkyl butyrate which comprises: (a) producing a fermented liquid containing butyrate salt through a fermentation process using butyric acid producing strains; (b) obtaining an extracted liquid containing butyric acid from a continuous extracting apparatus using an extraction solvent after converting the butyrate salt into butyric acid by adding an inorganic acid except for carbonic acid or carbon dioxide into the fermented liquid wherein the continuous extracting apparatus includes a plurality of extraction terminals which are installed inside an extraction column and perform a reciprocating motion vertically and the fermented liquid and the extracted liquid are supplied to upper and lower portions of the column respectively; and (c) reacting the extracted liquid and alcohol having a carbon number of 4 or less or a mixture thereof in an esterification reactor to convert a resultant product into alkyl butyrate. According to the present invention butyric acid existing in microbic culture fluid can be efficiently extracted and furthermore competitively priced alkyl butyrate can be prepared without an additional process of separating the extracted solvent while minimizing energy consumption.

No. of Pages : 28 No. of Claims : 7

(12) PATENT APPLICATION PUBLICATION
(19) INDIA
(22) Date of filing of Application :14/03/2013
(21) Application No.2024/CHENP/2013 A
(43) Publication Date : 07/11/2014

(54) Title of the invention : CONNECTOR

(51) International classification :A61B1/06,A61B1/04,G02B23/26
(31) Priority Document No :2010271677
(32) Priority Date :06/12/2010
(33) Name of priority country :Japan
(86) International Application No :PCT/JP2011/078049
Filing Date :05/12/2011
(87) International Publication No :WO 2012/077626
(61) Patent of Addition to Application Number :NA
Filing Date :NA
(62) Divisional to Application Number :NA
Filing Date :NA

(71)**Name of Applicant :**
1)OLYMPUS MEDICAL SYSTEMS CORP.
Address of Applicant :43 2 Hatagaya 2 chome Shibuya ku Tokyo 1510072 Japan
(72)**Name of Inventor :**
1)OUE Takeshi
2)SUZUKI Masanori

(57) Abstract :
The connector is provided with: a cable wherein multiple signal wires have been bundled; an electrical connection part provided with a rectangular case and a circuit board wherein the circuit board has signal wire connection components to which signal wires exposed from the cable are connected and a cable fixing component for fixing the end of the cable; a flat connector case that has an integral structure and is integrally affixed to the cable at a midway point and which has an accommodating space for accommodating the electrical connection part and cable an opening to which the case of the electrical connection part is integrally attached and an extension hole for extending the cable into the accommodating space; and a sliding part disposed to slide freely into the accommodating space of the connector case and provided on one surface with a cable bending shape defining part that defines the bending shape of the cable to be accommodated in the accommodating space.

No. of Pages : 36 No. of Claims : 7

(12) PATENT APPLICATION PUBLICATION
(19) INDIA
(22) Date of filing of Application :26/03/2014
(21) Application No.2278/CHENP/2014 A
(43) Publication Date : 07/11/2014

(54) Title of the invention : SUBSTITUTED TETRAHYDROISOQUINOLINE COMPOUNDS AS FACTOR XIA INHIBITORS

(51) International classification	:C07D217/26,C07D401/04,C07D401/10
(31) Priority Document No	:61/547292
(32) Priority Date	:14/10/2011
(33) Name of priority country	:U.S.A.
(86) International Application No Filing Date	:PCT/US2012/059969 :12/10/2012
(87) International Publication No	:WO 2013/056060
(61) Patent of Addition to Application Number Filing Date	:NA :NA
(62) Divisional to Application Number Filing Date	:NA :NA

(71)**Name of Applicant :**
1)BRISTOL MYERS SQUIBB COMPANY
Address of Applicant :Route 206 and Province Line Road Princeton New Jersey 08543 4000 U.S.A.
(72)**Name of Inventor :**
1)ORWAT Michael J.
2)PINTO Donald J.P.
3)SMITH II Leon M.
4)SRIVASTAVA Shefali

(57) Abstract :
The present invention provides compounds of Formula (I): or stereoisomers pharmaceutically acceptable salts thereof wherein all of the variables are as defined herein. These compounds are inhibitors of factor XIa and/or plasma kallikrein which may be used as medicaments.

No. of Pages : 207 No. of Claims : 16

(12) PATENT APPLICATION PUBLICATION
(19) INDIA
(22) Date of filing of Application :25/03/2013
(21) Application No.2349/CHENP/2013 A
(43) Publication Date : 07/11/2014

(54) Title of the invention : APPARATUSES AND METHODS FOR DETECTING OPTICAL BARCODES

(51) International classification :G06K7/10,G06K19/06
(31) Priority Document No :10186031.0
(32) Priority Date :01/10/2010
(33) Name of priority country :EPO
(86) International Application No :PCT/EP2011/066993
Filing Date :29/09/2011
(87) International Publication No :WO 2012/041967
(61) Patent of Addition to Application Number :NA
Filing Date :NA
(62) Divisional to Application Number :NA
Filing Date :NA

(71)**Name of Applicant :**
1)ROCHE DIAGNOSTICS GMBH
Address of Applicant :Sandhofer Strasse 116 68305 Mannheim Germany
2)F. HOFFMANN LA ROCHE AG
(72)**Name of Inventor :**
1)HENSEL Uwe
2)SCHMELZEISEN REDEKER Guenther

(57) Abstract :
A barcode reader (124) for detecting a barcode (110) associated with a moving carrier (112) is proposed. The barcode reader (124) has at least one optical barcode detector for detecting information modules (116) of the barcode (110) at least in a one dimensional manner. The barcode reader (124) also comprises at least one optical clock track detector for detecting clock track modules (130) of a clock track (128) of the barcode (110) and at least one optical reference detector for detecting at least one item of reference information relating to the barcode (110). The barcode reader (124) is set up to infer a direction of movement (120) of the carrier (112) from at least one signal from the clock track detector and at least one signal from the reference detector.

No. of Pages : 74 No. of Claims : 19

(12) PATENT APPLICATION PUBLICATION
(19) INDIA
(22) Date of filing of Application :25/02/2013
(21) Application No.1500/CHENP/2013 A
(43) Publication Date : 07/11/2014

(54) Title of the invention : FUSE UNIT

(51) International classification :H01H85/044,H01H85/165,H01H85/20
(31) Priority Document No :2010170266
(32) Priority Date :29/07/2010
(33) Name of priority country :Japan
(86) International Application No :PCT/JP2011/004303
Filing Date :28/07/2011
(87) International Publication No :WO 2012/014491
(61) Patent of Addition to Application Number :NA
Filing Date :NA
(62) Divisional to Application Number :NA
Filing Date :NA

(71)**Name of Applicant :**
1)YAZAKI CORPORATION
Address of Applicant :4 28 Mita 1 chome Minato ku Tokyo 1080073 Japan
(72)**Name of Inventor :**
1)ONODA Shinya
2)ISHIKAWA Yoshinori

(57) Abstract :
A fuse unit includes: a bus bar (2) that includes a plurality of fusible parts (6) interposed between a power supply (3) side terminal and a plurality of load side terminals (5a 5b); and an insulating resin portion that is formed by insert molding using the bus bar as an insert component. The insulating resin portion (10) includes: a first resin portion (11) that is arranged at a periphery on the side of the power supply side terminal with respect to the fusible parts; a second resin portion (12) that is arranged at a periphery on the side of the load side terminals with respect to the fusible parts; and a plurality of coupling portions (13a 13e) that couples the first resin portion and the second resin portion in a position outside each of the fusible parts (6). Each of the coupling portions is formed such that a reinforcement portion (7) having a lower heat shrinkage rate than the insulating resin portion and having a higher strength than the insulating resin portion is an insert component. The reinforcement portion (7) is provided using the bus bar (2).

No. of Pages : 23 No. of Claims : 3

(12) PATENT APPLICATION PUBLICATION
(19) INDIA
(22) Date of filing of Application :01/03/2013
(21) Application No.1676/CHENP/2013 A
(43) Publication Date : 07/11/2014

(54) Title of the invention : CRIMP TERMINAL

(51) International classification :H01R4/18,H01R4/26
(31) Priority Document No :2010176143
(32) Priority Date :05/08/2010
(33) Name of priority country :Japan
(86) International Application No :PCT/JP2011/066211
Filing Date :15/07/2011
(87) International Publication No :WO 2012/017807
(61) Patent of Addition to Application Number :NA
Filing Date :NA
(62) Divisional to Application Number :NA
Filing Date :NA

(71)**Name of Applicant :**
1)YAZAKI CORPORATION
Address of Applicant :4 28 Mita 1 chome Minato ku Tokyo 1080073 Japan
(72)**Name of Inventor :**
1)ONUMA Masanori
2)TAKEMURA Kousuke

(57) Abstract :
Before a conductive crimp part (11) is crimped to a conductor (Wa) of an electric wire a plurality of circular concave parts (20) are provided in an inner surface (11R) of the conductive crimp part (11) at positions spaced apart from each other to serve as serrations of the conductive crimp part (11). The inner bottom surfaces (20A) of the concave portions (20) have semispherical surfaces.

No. of Pages : 39 No. of Claims : 2

(12) PATENT APPLICATION PUBLICATION
(19) INDIA
(22) Date of filing of Application :04/03/2013
(21) Application No.1737/CHENP/2013 A
(43) Publication Date : 07/11/2014

(54) Title of the invention : PORTABLE DEVICE WITH IMPROVED ENERGY AUTONOMY

(51) International classification :H02J7/32,H02J7/35
(31) Priority Document No :01267/10
(32) Priority Date :05/08/2010
(33) Name of priority country :Switzerland
(86) International Application No :PCT/IB2011/053514
Filing Date :05/08/2011
(87) International Publication No :WO 2012/017420
(61) Patent of Addition to Application Number :NA
Filing Date :NA
(62) Divisional to Application Number :NA
Filing Date :NA

(71)**Name of Applicant :**
1)BCHEL Christoph
Address of Applicant :Dornacherstrasse 36 CH 4053 Basel Switzerland
(72)**Name of Inventor :**
1)BCHEL Christoph

(57) Abstract :
A portable electronic device is disclosed this portable electronic device requiring a first type of energy in particular electrical energy to operate. The device comprises: at least one transducer which is suitable for converting between at least one second type of energy and the first type of energy and which is required for at least one intended function of the device. In this case the at least one transducer is suitable for converting energy of the second type into energy of the first type and outputting this energy in a charging mode and the energy of a first type which is output by the at least one transducer in the charging mode can be supplied to the device in order to supply it with energy.

No. of Pages : 25 No. of Claims : 32

(12) PATENT APPLICATION PUBLICATION
(19) INDIA
(22) Date of filing of Application :27/03/2013
(21) Application No.2397/CHENP/2013 A
(43) Publication Date : 07/11/2014

(54) Title of the invention : REVERSE CONDUCTING POWER SEMICONDUCTOR DEVICE

(51) International classification :H01L29/74
(31) Priority Document No :10181546.2
(32) Priority Date :29/09/2010
(33) Name of priority country :EPO
(86) International Application No :PCT/EP2011/066979
Filing Date :29/09/2011
(87) International Publication No :WO 2012/041958
(61) Patent of Addition to Application Number :NA
Filing Date :NA
(62) Divisional to Application Number :NA
Filing Date :NA

(71)**Name of Applicant :**
1)ABB TECHNOLOGY AG
Address of Applicant :Affolternstrasse 44 CH 8050 Z¼rich Switzerland
(72)**Name of Inventor :**
1)RAHIMO Munaf
2)ARNOLD Martin
3)STIASNY Thomas

(57) Abstract :
A reverse conducting power semiconductor device (1) with a wafer (10) having a first main side (11) and a second main side (15) which is arranged parallel to the first main side (11) is provided. The device comprises a plurality of diode cells (96) and a plurality of IGCT cells (91) wherein each IGCT cell comprises layers in the following order between the first and second main side (11 15): a cathode electrode (2) a first cathode layer (4) of the first conductivity type a base layer (6) of the second conductivity type a drift layer (3) of the first conductivity type a buffer layer (8) of the first conductivity type a first anode layer (5) of the second conductivity type and a first anode electrode (25). Each IGCT cell (91) further comprises a gate electrode (7) which is arranged lateral to the first cathode layer (4) and separated from it by the base layer (6). Each diode cell (96) comprises a second anode electrode (28) on the first main side (11) which is in contact to a second anode layer (55) of the second conductivity type which second anode layer (55) is separated from the base layer (6) by the drift layer (3) and a second cathode layer (45) of the first conductivity type on the second main side (15) which is arranged alternating to the first anode layer (5). The device comprises at least one mixed part (99) in which the second anode layers (55) of the diode cells (96) alternate with the first cathode layers (4) of the IGCT cells (91).

No. of Pages : 19 No. of Claims : 15

(12) PATENT APPLICATION PUBLICATION
(19) INDIA
(22) Date of filing of Application :05/03/2013
(21) Application No.1774/CHENP/2013 A
(43) Publication Date : 07/11/2014

(54) Title of the invention : SWITCHING SYSTEM SWITCHING CONTROL METHOD AND MEMORY MEDIUM

(51) International classification :H04L12/56
(31) Priority Document No :2010200690
(32) Priority Date :08/09/2010
(33) Name of priority country :Japan
(86) International Application No :PCT/JP2011/066524
Filing Date :21/07/2011
(87) International Publication No :WO 2012/032864
(61) Patent of Addition to Application Number :NA
Filing Date :NA
(62) Divisional to Application Number :NA
Filing Date :NA

(71)**Name of Applicant :**
1)NEC CORPORATION
Address of Applicant :7 1 Shiba 5 chome Minato ku Tokyo 1088001 Japan
(72)**Name of Inventor :**
1)SUZUKI Yoji
2)TAKASHIMA Masanori
3)KUBOTA Kazushi
4)IZAWA Tetsu
5)HAYASHI Masashi

(57) Abstract :
A switching system achieves extensions in the number of entries in an open flow table using each table of switches which are existing resources. Specifically the switches construct the open flow table by theoretically integrating a plurality of tables in which processing is defined with respect to predetermined packets in response to the conditions defined in each table and the processing details refer to the open flow table and determine the processing details with respect to incoming packets. According to the determined processing details processing is then performed with respect to the incoming packets.

No. of Pages : 71 No. of Claims : 9

(12) PATENT APPLICATION PUBLICATION
(19) INDIA
(22) Date of filing of Application :08/03/2013
(21) Application No.1889/CHENP/2013 A
(43) Publication Date : 07/11/2014

(54) Title of the invention : METHODS OF SCHEDULING A COMPONENT CARRIER

(51) International classification :H04L5/00
(31) Priority Document No :201010254849.3
(32) Priority Date :16/08/2010
(33) Name of priority country :China
(86) International Application No :PCT/IB2011/002081
Filing Date :09/08/2011
(87) International Publication No :WO 2012/023040
(61) Patent of Addition to Application Number :NA
Filing Date :NA
(62) Divisional to Application Number :NA
Filing Date :NA

(71)**Name of Applicant :**
1)ALCATEL LUCENT
Address of Applicant :3 avenue Octave Grard F 75007 Paris France
(72)**Name of Inventor :**
1)YANG Tao

(57) Abstract :
The present invention provides solutions of scheduling a carrier component between a base station and a user equipment by assigning a CIF. In one embodiment of the present invention there is provided a method in a base station of scheduling a carrier component for a user equipment including: transmitting a configuration message to configure cells of the user equipment wherein the configuration message includes respective first information for carrier identification of each cell. The technical solutions provided in the present invention can guarantee the flexibility of carrier component assignment.

No. of Pages : 18 No. of Claims : 14

(12) PATENT APPLICATION PUBLICATION
(19) INDIA
(22) Date of filing of Application :13/03/2013
(21) Application No.1997/CHENP/2013 A
(43) Publication Date : 07/11/2014

(54) Title of the invention : PRESENTING AVAILABILITY STATUSES OF SYNCHRONIZED OBJECTS

(51) International classification :G06F15/16,G06F9/44,G06F3/14
(31) Priority Document No :12/894679
(32) Priority Date :30/09/2010
(33) Name of priority country :U.S.A.
(86) International Application No :PCT/US2011/051146
Filing Date :11/09/2011
(87) International Publication No:WO 2012/050700
(61) Patent of Addition to Application Number :NA
Filing Date :NA
(62) Divisional to Application Number :NA
Filing Date :NA

(71)**Name of Applicant :**
1)MICROSOFT CORPORATION
Address of Applicant :One Microsoft Way Redmond Washington 98052 6399 U.S.A.
(72)**Name of Inventor :**
1)MANTRI Siddharth
2)POPKIN Rachel Karin

(57) Abstract :
The objects of an on object set may be synchronized across many clients (e.g. various devices may synchronize files of a mirrored filesystem). However the synchronization of an object may be complicated and an object may not yet be synchronized in the object set of a client for many reasons such as an incomplete reception of the object an unavailability of the object from currently reachable hosts and a versioning conflict with a different version of the same object in the object set. In order to inform a user of the availability of an object in the object set an analysis of the availability status of the object may be performed (e.g. by tracking metadata stored in object descriptors of respective objects of the object set and later examining the metadata of respective objects) and a selected availability status may be presented to the user.

No. of Pages : 45 No. of Claims : 15

(12) PATENT APPLICATION PUBLICATION
(19) INDIA
(22) Date of filing of Application :28/03/2013
(21) Application No.2429/CHENP/2013 A
(43) Publication Date : 07/11/2014

(54) Title of the invention : INFLUENZA VIRUS NEUTRALIZING ANTIBODY AND METHOD FOR SCREENING SAME

(51) International classification :C12N15/09,A61K39/145,A61K39/42
(31) Priority Document No :61/380051
(32) Priority Date :03/09/2010
(33) Name of priority country :U.S.A.
(86) International Application No :PCT/JP2011/070544
Filing Date :02/09/2011
(87) International Publication No :WO 2012/029997
(61) Patent of Addition to Application Number :NA
Filing Date :NA
(62) Divisional to Application Number :NA
Filing Date :NA

(71)**Name of Applicant :**
1)FUJITA HEALTH UNIVERSITY
Address of Applicant :1 98 Dengakugakubo Kutsukake cho Toyoake shi Aichi 4701192 Japan
2)THE RESEARCH FOUNDATION FOR MICROBIAL DISEASES OF OSAKA UNIVERSITY
(72)**Name of Inventor :**
1)KUROSAWA Yoshikazu
2)IBA Yoshitaka
3)OHSHIMA Nobuko
4)OKUNO Yoshinobu

(57) Abstract :
The present invention provides an anti influenza virus antibody that has neutralizing activity against any of the influenza viruses which are categorized into two groups by degree of amino acid conservation in hemagglutinin regardless of any differences between the groups. The present invention also provides a method for producing the same and a method for testing whether a subject has the neutralizing antibody.

No. of Pages : 162 No. of Claims : 30

(12) PATENT APPLICATION PUBLICATION
(19) INDIA
(22) Date of filing of Application :02/04/2013
(21) Application No.2567/CHENP/2013 A
(43) Publication Date : 07/11/2014

(54) Title of the invention : APPARATUS FOR HIGH PRODUCTIVITY ROLLING PARTICULARLY FOR MILLING SECTION BARS OR RODS

(51) International classification :B21B1/18
(31) Priority Document No :VI2010A000251
(32) Priority Date :15/09/2010
(33) Name of priority country :Italy
(86) International Application No :PCT/IT2011/000317
Filing Date :13/09/2011
(87) International Publication No :WO 2012/035569
(61) Patent of Addition to Application Number :NA
Filing Date :NA
(62) Divisional to Application Number :NA
Filing Date :NA

(71)**Name of Applicant :**
1)SMS MEER S.P.A.
Address of Applicant :Via Udine 103 I 33017 Tarcento (UD) Italy
(72)**Name of Inventor :**
1)DI LENARDO Andrea

(57) Abstract :
The present invention concerns an apparatus (1) for high productivity rolling particularly for milling section bars or rods comprising at least one intermediate train (2) in line with a finishing train (3) providing a sequence of a plurality of stands (4) defining at least two rolling separate lines (8Dx 8Sx); each stand (4) comprises two rolling cylinders (6) and is driven by a respective motor (5) while each cylinder (6) is provided with at least two respective channels (7Dx 7Sx) suitable to define the rolling profiles of the products to be worked along the rolling lines (8Dx 8Sx). Moreover the cylinders (6) are bound together at the two ends through respective pairs of hinges (10Dx 10Sx) and the distance between the elements of each pair of hinges (10Dx 10Sx) is adjustable independently through respective adjusting devices (9Dx 9Sx).

No. of Pages : 12 No. of Claims : 7

(12) PATENT APPLICATION PUBLICATION
(19) INDIA
(22) Date of filing of Application :27/03/2013
(21) Application No.2401/CHENP/2013 A
(43) Publication Date : 07/11/2014

(54) Title of the invention : CONTROL DEVICE OF ELECTRIC MOTORCYCLE

(51) International classification :B62J9/00,B62J11/00,B62M7/12
(31) Priority Document No :2010195035
(32) Priority Date :31/08/2010
(33) Name of priority country :Japan
(86) International Application No:PCT/JP2011/066359
Filing Date :19/07/2011
(87) International Publication No :WO 2012/029423
(61) Patent of Addition to Application Number :NA
Filing Date :NA
(62) Divisional to Application Number :NA
Filing Date :NA

(71)**Name of Applicant :**
1)HONDA MOTOR CO. LTD.
Address of Applicant :1 1 Minami Aoyama 2 chome Minato ku Tokyo 1078556 Japan
(72)**Name of Inventor :**
1)TSUKAMOTO Tomohiro
2)TOMINAGA Takashi
3)SHIBATA Kazumi
4)NISHIURA Hisao
5)KATO Seiji
6)AKUTSU Susumu

(57) Abstract :
Disclosed is a control device of an electric motorcycle having increased heat dissipation of heating elements contained in the control unit and improved placement efficiency. A battery (56) is positioned near a through hole (19a) of a swing shaft (19) which swingably supports on a vehicle frame (2) a swing arm (30) at a position on the swing arm (30) towards the front of the vehicle. An electric motor (M) is positioned near the axle (32) of the rear wheel (WR) at a position on the swing arm (30) towards the rear of the vehicle. As a control device disposed so as to be oriented towards a plane section in the vehicle width direction a board (50) includes: a control board (50a) which has a control element with low heat generation amount and on which a drive circuit for controlling the electric motor (M) is arranged; and a heat generating element board (50b) having a heat generation element with a high heat generation amount and on which a charge circuit is arranged for charging the battery (56). The control board (50a) is arranged in a position outside of the battery (56) in the vehicle width direction and the heat generating element board (50b) is arranged in a position further towards the back of the vehicle than the control plate (50a) and further towards the front of the vehicle than the motor (M).

No. of Pages : 38 No. of Claims : 7

(12) PATENT APPLICATION PUBLICATION
(19) INDIA
(22) Date of filing of Application :27/03/2013
(21) Application No.2402/CHENP/2013 A
(43) Publication Date : 07/11/2014

(54) Title of the invention : DATA COMMUNICATION TERMINAL COMPUTER PROGRAM AND DATA PROCESSING METHOD

(51) International classification :H04M1/00
(31) Priority Document No :2010216426
(32) Priority Date :28/09/2010
(33) Name of priority country :Japan
(86) International Application No :PCT/JP2011/005018
Filing Date :07/09/2011
(87) International Publication No :WO 2012/042756
(61) Patent of Addition to Application Number :NA
Filing Date :NA
(62) Divisional to Application Number :NA
Filing Date :NA

(71)**Name of Applicant :**
1)NEC CASIO MOBILE COMMUNICATIONS LTD.
Address of Applicant :1753 Shimonumabe Nakahara ku Kawasaki shi Kanagawa 2118666 Japan
(72)**Name of Inventor :**
1)KOMOTO Takahito

(57) Abstract :
A contact request from another person is received by an incoming contact unit (110) and the incoming contact request is opened by an incoming communication opening unit (120). However in the case that the contact request is not opened if the sender of said contact request is not registered in a partner registering unit (140) the unopened contact request is presented by an incoming communication presentation unit (130) with a prescribed display image. Meanwhile if the communication partner of the unopened contact request is registered in the partner registering unit (140) the unopened contact request is presented by a specific presentation unit (150) with a specific display image.

No. of Pages : 30 No. of Claims : 8

(12) PATENT APPLICATION PUBLICATION
(19) INDIA
(22) Date of filing of Application :28/03/2013
(21) Application No.2466/CHENP/2013 A
(43) Publication Date : 07/11/2014

(54) Title of the invention : IMPROVEMENTS IN AND RELATING TO BALE HANDLING

(51) International classification :A01D87/12
(31) Priority Document No :587725
(32) Priority Date :01/09/2010
(33) Name of priority country :New Zealand
(86) International Application No :PCT/NZ2011/000168
Filing Date :25/08/2011
(87) International Publication No :WO 2012/030230
(61) Patent of Addition to Application Number :NA
Filing Date :NA
(62) Divisional to Application Number :NA
Filing Date :NA

(71)**Name of Applicant :**
1)ANDERSON Paul James
Address of Applicant :1572 Fortification Road RD1 Wyndham 9891 New Zealand
2)ANDERSON Michelle Stephanie
(72)**Name of Inventor :**
1)ANDERSON Paul James
2)ANDERSON Michelle Stephanie

(57) Abstract :
A bale grab device which includes: at least one frame member; a central projecting member; and at least two holding arms characterised in that the holding arms are located on either side of the central projecting member and wherein each holding member is configured to be capable of being independently moved between an open and a closed position wherein a gripping region is provided between each of the holding arms and the said central projecting member.

No. of Pages : 14 No. of Claims : 28

(12) PATENT APPLICATION PUBLICATION
(19) INDIA
(22) Date of filing of Application :23/07/2012
(21) Application No.3036/CHE/2012 A
(43) Publication Date : 07/11/2014

(54) Title of the invention : SYSTEM AND METHOD FOR COMMUNICATING DATA TO MULTIPLE COMMUNICATION DEVICES

(51) International classification :H04L
(31) Priority Document No :NA
(32) Priority Date :NA
(33) Name of priority country :NA
(86) International Application No :NA
Filing Date :NA
(87) International Publication No : NA
(61) Patent of Addition to Application Number :NA
Filing Date :NA
(62) Divisional to Application Number :NA
Filing Date :NA

(71)**Name of Applicant :**
1)Mr. Tarun Anand
Address of Applicant :#55 Vaishali Maurya Enclave Pitampura New Delhi-110034 INDIA Tamil Nadu India
(72)**Name of Inventor :**
1)Mr. Tarun anand

(57) Abstract :
System and method for communicating data to multiple communication devices are provided. The method comprises receiving a call notification and a peer notification by a first communication device from a server sending a peer notification to a second communication device by the first communication device acknowledging the call notification by the second communication device establishing a data channel between the second communication device and the server and receiving the data from the server. In another embodiment the method comprises acknowledging the call notification received from the server by the first communication device establishing a data channel between the first communication device and the server and receiving the data from the server.

No. of Pages : 20 No. of Claims : 22

(12) PATENT APPLICATION PUBLICATION
(19) INDIA
(22) Date of filing of Application :08/03/2013
(21) Application No.1903/CHENP/2013 A
(43) Publication Date : 07/11/2014

(54) Title of the invention : COMPOSITION CONTAINING A PYRIPYROPENE INSECTICIDE AND AN ADJUVANT

(51) International classification :A01N43/90
(31) Priority Document No :61/382518
(32) Priority Date :14/09/2010
(33) Name of priority country :U.S.A.
(86) International Application No :PCT/EP2011/065855
Filing Date :13/09/2011
(87) International Publication No :WO 2012/035015
(61) Patent of Addition to Application Number :NA
Filing Date :NA
(62) Divisional to Application Number :NA
Filing Date :NA

(71)**Name of Applicant :**
1)BASF SE
Address of Applicant :67056 Ludwigshafen Germany
(72)**Name of Inventor :**
1)XU Wen
2)NEESE Paul
3)FLETCHER William Maurice
4)ANSPAUGH Douglas D.
5)SAXELL Heidi Emilia
6)DIELEMAN Cedric
7)WEISHAAR Walter
8)KIERKUS Paul Ch.
9)BENTON Kara
10)LEVY Tatjana
11)BERGHAUS Rainer

(57) Abstract :
Pesticidal composition containing a pyripyropene insecticide and an adjuvant. The present invention relates to a compositions comprising a pyripyropene pesticide of the formula (I) or (II) as defined below Formula (I) Formula (II) and an adjuvant. The present invention relates also to methods of preparing and applying such compositions as well as several uses thereof and finally seeds comprising said composition. The invention also relates to an aqueous pesticide formulation comprising a pesticide compound of the formula I as defined in claim 1 in the form of fine particles suspended in an aqueous liquid.

No. of Pages : 73 No. of Claims : 39

(12) PATENT APPLICATION PUBLICATION
(19) INDIA
(22) Date of filing of Application :15/03/2013
(21) Application No.2131/CHENP/2013 A
(43) Publication Date : 07/11/2014

(54) Title of the invention : METHOD FOR CONFIGURING A GRAPHICAL USER INTERFACE

(51) International classification :G06F3/0485,G06F9/44,G06Q10/00
(31) Priority Document No :1482/10
(32) Priority Date :15/09/2010
(33) Name of priority country :Switzerland
(86) International Application No :PCT/CH2011/000214
Filing Date :13/09/2011
(87) International Publication No :WO 2012/034244
(61) Patent of Addition to Application Number :NA
Filing Date :NA
(62) Divisional to Application Number :NA
Filing Date :NA

(71)**Name of Applicant :**
1)FERAG AG
Address of Applicant :Z¼richstrasse 74 CH 8340 Hinwil Switzerland
(72)**Name of Inventor :**
1)M–CKLI J¼rg
2)GROTH Uwe

(57) Abstract :
In order to configure a graphical user interface (6) for displays of various terminals a graphical configuration interface (81) is presented which comprises a miniaturized presentation of a desktop for the graphical user interface (6). Configuration instructions are received in order to select widgets (W) and in order to arrange the widgets (W) on the desktop by positioning miniaturized presentations of the widgets on the desktop presented in miniature. Further configuration instructions selectively associate one or more defined parts of the desktop with the terminals and the graphical user interface (6) is defined for a particular terminal on the basis of the associated parts of the desktop and the widgets (W) arranged thereon.

No. of Pages : 72 No. of Claims : 12

(12) PATENT APPLICATION PUBLICATION
(19) INDIA
(22) Date of filing of Application :15/03/2013
(21) Application No.2133/CHENP/2013 A
(43) Publication Date : 07/11/2014

(54) Title of the invention : COMPUTER IMPLEMENTED GRAPHICAL USER INTERFACE

(51) International classification :G06F3/048,G06Q10/00
(31) Priority Document No :1481/10
(32) Priority Date :15/09/2010
(33) Name of priority country :Switzerland
(86) International Application No :PCT/CH2011/000213
Filing Date :13/09/2011
(87) International Publication No :WO 2012/034243
(61) Patent of Addition to Application Number :NA
Filing Date :NA
(62) Divisional to Application Number :NA
Filing Date :NA

(71)**Name of Applicant :**
1)FERAG AG
Address of Applicant :Z¼richstrasse 74 CH 8340 Hinwil Switzerland
(72)**Name of Inventor :**
1)GROTH Uwe

(57) Abstract :
The invention relates to a computer implemented graphical user interface (6) for a display (60) comprising an information area (62) for presenting a section (A) of a desktop (A) on which a plurality of widgets (W1 W2 W3 W4 W5) are arranged. The user interface also comprises a navigation area (61) which is substantially smaller than the information area (62) and which is arranged outside of the information area (62) and which has a miniaturized presentation (A) of the entire desktop and the widgets arranged thereon. The navigation area (61) and the information area (62) are coupled by means of a selection indicator (L) which can be moved in the navigation area (61) in such a way that a sub area of the desktop (A) presented in miniature determined in the navigation area (61) by the selection indicator (I) corresponds to the section (A) of the desktop (A) presented in the information area (62).

No. of Pages : 72 No. of Claims : 15

(12) PATENT APPLICATION PUBLICATION
(19) INDIA
(22) Date of filing of Application :22/03/2013
(21) Application No.2315/CHENP/2013 A
(43) Publication Date : 07/11/2014

(54) Title of the invention : SUCCINIC ANHYDRIDE FROM ETHYLENE OXIDE

(51) International classification :C07D307/60
(31) Priority Document No :61/377917
(32) Priority Date :28/08/2010
(33) Name of priority country :U.S.A.
(86) International Application No :PCT/US2011/049125
Filing Date :25/08/2011
(87) International Publication No :WO 2012/030619
(61) Patent of Addition to Application Number :NA
Filing Date :NA
(62) Divisional to Application Number :NA
Filing Date :NA

(71)**Name of Applicant :**
1)NOVOMER INC.
Address of Applicant :950 Danby Road Suite 198 Ithaca NY 14850 U.S.A.
(72)**Name of Inventor :**
1)ALLEN Scott D.
2)DOMBEK Bernard Duane
3)FRUCHEY Olan Stanley
4)CLINTON Nye A.

(57) Abstract :
Continuous flow systems and methods produce succinic anhydride by a double carbonylation of ethylene oxide with carbon monoxide and at least one catalyst. In some embodiments the double carbonylation occurs using a single catalyst. In other embodiments a first catalyst is used to promote the first carbonylation and a second catalyst different from the first catalyst is used to promote the second carbonylation. The succinic anhydride is isolated from the product stream by crystallization and the catalyst is recycled to the reaction stream.

No. of Pages : 47 No. of Claims : 51

(12) PATENT APPLICATION PUBLICATION
(19) INDIA
(22) Date of filing of Application :18/01/2013
(21) Application No.454/CHENP/2013 A
(43) Publication Date : 07/11/2014

(54) Title of the invention : METHOD TO IDENTIFY A PATIENT WITH AN INCREASED LIKELIHOOD OF RESPONDING TO AN ANTI CANCER THERAPY

(51) International classification :a61k
(31) Priority Document No :10170004.5
(32) Priority Date :19/07/2010
(33) Name of priority country :EPO
(86) International Application No :PCT/EP2011/062227
Filing Date :18/07/2011
(87) International Publication No :WO 2012/010547
(61) Patent of Addition to Application Number :NA
Filing Date :NA
(62) Divisional to Application Number :NA
Filing Date :NA

(71)**Name of Applicant :**
1)F. HOFFMANN LA ROCHE AG
Address of Applicant :Grenzacher Strasse 124 CH 4070 Basel Switzerland
(72)**Name of Inventor :**
1)ANDRES Herbert
2)DE HAAS Sanne Lysbet
3)ELLIOTT Rebecca
4)KARL Johann
5)MENG Yu Ju Gloria
6)PLOWMAN Gregory D.
7)SCHERER Stefan
8)WILD Norbert

(57) Abstract :
The invention provides methods for identifying patient who may benefit from treatment with an anti cancer therapy comprising a VEGF antagonist. The invention also provides methods for monitoring a patients response to the anti cancer therapy. The invention also provides kits and articles of manufacture for use in the methods.

No. of Pages : 157 No. of Claims : 33

(12) PATENT APPLICATION PUBLICATION
(19) INDIA
(22) Date of filing of Application :26/04/2013
(21) Application No.1876/CHE/2013 A
(43) Publication Date : 07/11/2014

(54) Title of the invention : AN IMPROVED PROCESS FOR THE PREPARATION OF EMTRICITABINE

(51) International classification :C07D411/04
(31) Priority Document No :NA
(32) Priority Date :NA
(33) Name of priority country :NA
(86) International Application No :NA
Filing Date :NA
(87) International Publication No : NA
(61) Patent of Addition to Application Number :NA
Filing Date :NA
(62) Divisional to Application Number :NA
Filing Date :NA

(71)**Name of Applicant :**
1)LAURUS LABS PRIVATE LTD
Address of Applicant :2ND FLOOR, SERENE CHAMBERS ROAD, #7, BANJARA HILLS, HYDERABAD - 500 034 Andhra Pradesh India
(72)**Name of Inventor :**
1)SRINIVAS SIMHADRI
2)VENKATA SUNIL KUMAR INDUKURI
3)SEETA RAMANJANEYULU GORANTLA
4)VENKATESWARA RAO GOLLAPALLI
5)NAGIREDDY ARIKATLA

(57) Abstract :
The present invention provides an improved process for the preparation of emtricitabine with high yield and purity.An improved process for the preparation of emtricitabine of Formula I, comprising: a) reacting L-menthyl emtricitabine of Formula II with sodium borohydride in presence of dipotassium hydrogen phosphate and a polar solvent, at a temperature of about 5°C to 15°C to obtain a reaction mixture; wherein the reaction is carried out by adding sodium borohydride in a lot wise manner; b) isolating the emtricitabine; and c) purifying the obtained emtricitabine from alcoholic solvent to obtain pure emtricitabine.

No. of Pages : 21 No. of Claims : 10

(12) PATENT APPLICATION PUBLICATION
(19) INDIA
(22) Date of filing of Application :07/03/2013
(21) Application No.1876/CHENP/2013 A
(43) Publication Date : 07/11/2014

(54) Title of the invention : DIRECTORY LEASING

(51) International classification :G06F15/16,G06F9/06
(31) Priority Document No :12/885384
(32) Priority Date :17/09/2010
(33) Name of priority country :U.S.A.
(86) International Application No :PCT/US2011/050573
Filing Date :06/09/2011
(87) International Publication No :WO 2012/036938
(61) Patent of Addition to Application Number :NA
Filing Date :NA
(62) Divisional to Application Number :NA
Filing Date :NA

(71)**Name of Applicant :**
1)MICROSOFT CORPORATION
Address of Applicant :One Microsoft Way Redmond Washington 98052 6399 U.S.A.
(72)**Name of Inventor :**
1)KRUSE David Matthew
2)GEORGE Mathew
3)HAVEWALA Sarosh Cyrus
4)ALLRED Christian Gregory
5)CHRISTIANSEN Neal Robert

(57) Abstract :
Described are embodiments for allowing clients that access a distributed file system to locally cache directory metadata. The client may request a read lease which allows the client to cache the directory metadata locally and service requests received from the same application which originally requested the directory metadata using the cache. In addition the client may also request a handle lease which allows a client to delay the closing of a directory handle and allow the handle to be reused to service subsequent directory metadata requests from the same or a different application. A client may also request a write lease which allows an application on the client to modify the directory metadata such as by creating or deleting new files in the directory or changing their attributes and cache those changes.

No. of Pages : 25 No. of Claims : 10

(12) PATENT APPLICATION PUBLICATION
(19) INDIA
(22) Date of filing of Application :28/03/2013
(21) Application No.2454/CHENP/2013 A
(43) Publication Date : 07/11/2014

(54) Title of the invention : METHOD FOR MAKING MOLD AND MATERIAL FOR MAKING MOLD

(51) International classification :B22C9/02
(31) Priority Document No :2010223917
(32) Priority Date :01/10/2010
(33) Name of priority country :Japan
(86) International Application No :PCT/JP2011/072122
Filing Date :27/09/2011
(87) International Publication No :WO 2012/043588
(61) Patent of Addition to Application Number :NA
Filing Date :NA
(62) Divisional to Application Number :NA
Filing Date :NA

(71)**Name of Applicant :**
1)THE JAPAN STEEL WORKS LTD.
Address of Applicant :11 1 Osaki 1 chome Shinagawa ku Tokyo 1410032 Japan
2)Nikko Casting Co. Ltd.
(72)**Name of Inventor :**
1)TOMIGASHI Daisuke
2)ITABASHI Yoshikazu
3)KUBO Seiji

(57) Abstract :
The purpose of the present invention is to reduce the amount of molding sands used in a mold having broad utility. Provided is a method for making a mold including making a mold (sand mold) (12) by curing molding sands with a binder wherein hollow spheres (1) formed without a gap are arranged between the molding sands kneaded with the binder to make the mold. The hollow sphere (1) is preferably formed by processing metal plates into a hemispherical form and bonding the hemispherical metal plates to each other by welding the entire circumferences thereof. With the specific gravity of 0.5 to 2.0 times that of the molding sand the hollow sphere (1) has broad utility and is capable of reducing the amount of sands necessary for filling and the amount of additives used with the sands. The use of iron balls having the specific gravity equal to that of the used sand makes it possible to solve the problems of unbalance and overload at the time of handling a mold frame and to impart an excellent durability due to an appropriate strength.

No. of Pages : 19 No. of Claims : 7

(12) PATENT APPLICATION PUBLICATION
(19) INDIA
(22) Date of filing of Application :07/02/2013
(21) Application No.515/CHE/2013 A
(43) Publication Date : 07/11/2014

(54) Title of the invention : FACILE ELECTROCHEMICAL OXIDATION OF POLYAROMATIC HYDROCARBONS TO SURFACE-CONFINED REDOX-ACTIVE QUINONE SPECIES ON A MULTIWALLED CARBON NANOTUBE SURFACE

(51) International classification :g01n
(31) Priority Document No :NA
(32) Priority Date :NA
(33) Name of priority country :NA
(86) International Application No :NA
Filing Date :NA
(87) International Publication No : NA
(61) Patent of Addition to Application Number :NA
Filing Date :NA
(62) Divisional to Application Number :NA
Filing Date :NA

(71)**Name of Applicant :**
1)PROF. ANNAMALAI SENTHIL KUMAR
Address of Applicant :TT-525, ENVIRONMENTAL AND ANALYTICAL CHEMISTRY DIVISION SCHOOL OF ADVANCED SCIENCES, VIT UNIVERSITY VELLORE - 632 014 Tamil Nadu India
(72)**Name of Inventor :**
1)PROF. ANNAMALAI SENTHIL KUMAR
2)MS. PALANI BARATHI

(57) Abstract :
Here in, we are reporting surface bound electrochemical oxidation of polyaromatic hydrocarbons (PAHs), which are considered to be major environmental pollutants and highly carcinogenic, on multiwalled carbon nanotube (MWCNT) surface at potential of 1.0 V vs Ag/AgCl in pH 7 PBS and resulted to formation of stable surface confined quinone systems, unlike to the nil response of conventional electrodes (gold, platinum and glassy carbon). The PAHs are recycled as surface confined redox active quinones, which can be used for various electrochemical sensors and electronic applications. AN = Anthracene; AQ = Anthraquinone

No. of Pages : 31 No. of Claims : 4

(12) PATENT APPLICATION PUBLICATION
(19) INDIA
(22) Date of filing of Application :15/03/2013
(21) Application No.2104/CHENP/2013 A
(43) Publication Date : 07/11/2014

(54) Title of the invention : COMPOSITION FOR PREVENTING/CONTROLLING HARMFUL ARTHROPODS AND METHOD FOR PREVENTING/CONTROLLING HARMFUL ARTHROPODS

(51) International classification	:A01N43/40,A01N37/24,A01N37/28
(31) Priority Document No	:2010184720
(32) Priority Date	:20/08/2010
(33) Name of priority country	:Japan
(86) International Application No	:PCT/JP2011/068488
Filing Date	:08/08/2011
(87) International Publication No	:WO 2012/023530
(61) Patent of Addition to Application Number	:NA
Filing Date	:NA
(62) Divisional to Application Number	:NA
Filing Date	:NA

(71)**Name of Applicant :**
1)SUMITOMO CHEMICAL COMPANY LIMITED
Address of Applicant :27 1 Shinkawa 2 chome Chuo ku Tokyo 1048260 Japan
(72)**Name of Inventor :**
1)SAKAMOTO Norihisa
2)SAKAMOTO Emiko

(57) Abstract :
The disclosed composition for preventing/controlling harmful arthropods contains flonicamid at least one type of compound for controlling the growth of insects that is selected from Group (A) consisting of methoxyfenozide tebufenozide and chromafenozide and at least one type of compound for preventing/controlling sheath blight selected from Group (B) consisting of flutolanil pencycuron N [2 (1 3 dimethylbutyl)phenyl] 5 fluoro 1 3 dimethyl 1H pyrazole 4 carboxamide furametpyr and validamycin A and has an excellent effect of preventing/controlling harmful arthropods.

No. of Pages : 26 No. of Claims : 6

(12) PATENT APPLICATION PUBLICATION
(19) INDIA
(22) Date of filing of Application :15/03/2013
(21) Application No.2105/CHENP/2013 A
(43) Publication Date : 07/11/2014

(54) Title of the invention : POST ELECTRON BEAM STABILIZATION OF POLYMERIC MEDICAL DEVICES

(51) International classification :A61L31/06
(31) Priority Document No :12/860681
(32) Priority Date :20/08/2010
(33) Name of priority country :U.S.A.
(86) International Application No :PCT/US2011/047974
Filing Date :16/08/2011
(87) International Publication No :WO 2012/024328
(61) Patent of Addition to Application Number :NA
Filing Date :NA
(62) Divisional to Application Number :NA
Filing Date :NA

(71)**Name of Applicant :**
1)ABBOTT CARDIOVASCULAR SYSTEMS INC.
Address of Applicant :3200 Lakeside Drive S314 Santa Clara California 95054 U.S.A.
(72)**Name of Inventor :**
1)KLEINER Lothar
2)TANG Fuh Wei

(57) Abstract :
Methods are disclosed for chemically stabilizing a polymer stent after sterilization. The stent is exposed to a temperature above ambient for a period of time after radiation sterilization. The exposure reduces the concentration of free radicals generated by the radiation.

No. of Pages : 28 No. of Claims : 15

(12) PATENT APPLICATION PUBLICATION
(19) INDIA
(22) Date of filing of Application :20/03/2013
(21) Application No.2224/CHENP/2013 A
(43) Publication Date : 07/11/2014

(54) Title of the invention : IMPROVED FILTERING DEVICE FOR THE FUEL PUMP OF A VEHICLE

(51) International classification :B01D35/027
(31) Priority Document No :MI2010A001738
(32) Priority Date :24/09/2010
(33) Name of priority country :Italy
(86) International Application No :PCT/IB2011/002257
Filing Date :23/09/2011
(87) International Publication No :WO 2012/038821
(61) Patent of Addition to Application Number :NA
Filing Date :NA
(62) Divisional to Application Number :NA
Filing Date :NA

(71)**Name of Applicant :**
1)GVS S.P.A.
Address of Applicant :Via Roma 50 I 40069 Zola Predosa (Bologna) Italy
(72)**Name of Inventor :**
1)SCAGLIARINI Marco

(57) Abstract :
A filtering device (1) for use in filtering fluids used in a vehicle such as its fuel in which case said device is to be positioned on the suction side of a vehicle fuel pump (7) or in filtering a lubricant used in the vehicle said device (1) comprising a filter body (2) presenting two opposing panels (3 4) joined together to define a closed internal cavity (9) in one (3) of said panels (3 4) there being provided an aperture (11) the fluid filtered in passing through said body (2) penetrating into said cavity (9) in this latter a spacer (17) being positioned to maintain said panels (3 4) separated and prevent their mutual contact. The spacer (17) is of open cell polymer foam material.

No. of Pages : 14 No. of Claims : 10

(12) PATENT APPLICATION PUBLICATION
(19) INDIA
(22) Date of filing of Application :28/03/2013
(21) Application No.2465/CHENP/2013 A
(43) Publication Date : 07/11/2014

(54) Title of the invention : POLYMERIZATION PROCESS TO MAKE LOW DENSITY POLYETHYLENE

(51) International classification :C08F10/02
(31) Priority Document No :61/388152
(32) Priority Date :30/09/2010
(33) Name of priority country :U.S.A.
(86) International Application No :PCT/US2011/052525
Filing Date :21/09/2011
(87) International Publication No :WO 2012/044504
(61) Patent of Addition to Application Number :NA
Filing Date :NA
(62) Divisional to Application Number :NA
Filing Date :NA

(71)**Name of Applicant :**
1)DOW GLOBAL TECHNOLOGIES LLC
Address of Applicant :2040 Dow Center Midland MI 48674 U.S.A.
(72)**Name of Inventor :**
1)BERBEE Otto J.
2)DEN DOELDER Cornelis F. J.
3)HOSMAN Cornelis J.

(57) Abstract :
A high pressure polymerization process to form an ethylene based polymer comprises the steps of: A. Injecting a first feed comprising a chain transfer agent system (CTA system) and ethylene into a first autoclave reactor zone operating at polymerization conditions to produce a first zone reaction product the CTA system of the first reactor zone having a transfer activity Z1; and B. (1) Transferring at least part of the first zone reaction product to a second reactor zone selected from a second autoclave reactor zone or a tubular reactor zone and operating at polymerization conditions and optionally (2) freshly injecting a second feed into the second reactor zone to produce a second zone reaction product with the proviso that at least one of the first reactor zone product and the freshly injected feed comprises a CTA system with a transfer activity of Z2; and with the proviso that the ratio of Z1 :Z2 is greater than 1.

No. of Pages : 46 No. of Claims : 16

(12) PATENT APPLICATION PUBLICATION
(19) INDIA
(22) Date of filing of Application :19/07/2013
(21) Application No.5784/CHENP/2013 A
(43) Publication Date : 07/11/2014

(54) Title of the invention : METHOD AND SYSTEM FOR BREWING INGREDIENTS IN A SOLVENT APPARATUS USING SAID SYSTEM

(51) International classification :A47J31/18
(31) Priority Document No :PCT/CN2010/080104
(32) Priority Date :22/12/2010
(33) Name of priority country :China
(86) International Application No :PCT/IB2011/055769
Filing Date :19/12/2011
(87) International Publication No :WO 2012/085813
(61) Patent of Addition to Application Number :NA
Filing Date :NA
(62) Divisional to Application Number :NA
Filing Date :NA

(71)**Name of Applicant :**
1)KONINKLIJKE PHILIPS ELECTRONICS N.V.
Address of Applicant :High Tech Campus 5 NL 5656 AE Eindhoven Netherlands
(72)**Name of Inventor :**
1)KELLY Declan Patrick
2)ZHOU Qi
3)WANG Guangwei

(57) Abstract :
The invention relates to a method and a system (1) for brewing ingredients in a solvent said system comprising: a first unit (5) for measuring a change of the electro conductivity (EC) of said solvent a second unit (6) for comparing said change of the electro conductivity (EC) with a predetermined threshold (TH) to generate a signal (S) indicating that the ingredients should be separated from the solvent. This system allows determining when the brewing of ingredients has to be stopped without the need for a user to have a preset brewing time duration.

No. of Pages : 36 No. of Claims : 15

(12) PATENT APPLICATION PUBLICATION
(19) INDIA
(22) Date of filing of Application :27/03/2013
(21) Application No.1358/CHE/2013 A
(43) Publication Date : 07/11/2014

(54) Title of the invention : LED DRIVING DEVICE AND LED DRIVING METHOD

(51) International classification :F21V
(31) Priority Document No :2012-075306
(32) Priority Date :29/03/2012
(33) Name of priority country :Japan
(86) International Application No :NA
Filing Date :NA
(87) International Publication No : NA
(61) Patent of Addition to Application Number :NA
Filing Date :NA
(62) Divisional to Application Number :NA
Filing Date :NA

(71)**Name of Applicant :**
1)NEC CORPORATION
Address of Applicant :7-1, SHIBA 5-CHOME, MINATO-KU, TOKYO Japan
(72)**Name of Inventor :**
1)MATSUMURA SATOMI

(57) Abstract :
Disclosed is a LED lighting device or the like able to light and extinguish a LED, which has quick response properties to the flicker, with using composition of a simple power source circuit and maintaining softness for users eyes. In the case that a direct current power source 1 starts applying a voltage to a LED 4, the LED driving device controls an amount of light of the LED 4 to increase as the time passes. In the case that the direct current power source 1 ends applying the voltage to the LED 4, the LED driving device controls an amount of the light of the LED 4 to decrease as the time passes.

No. of Pages : 18 No. of Claims : 10

(12) PATENT APPLICATION PUBLICATION
(19) INDIA
(22) Date of filing of Application :04/03/2013
(21) Application No.1733/CHENP/2013 A
(43) Publication Date : 07/11/2014

(54) Title of the invention : OLIGOOXOPIPERAZINES AND METHODS OF MAKING AND USING THEM

(51) International classification :C07D403/06,C07D403/14,A61K31/496
(31) Priority Document No :61/373108
(32) Priority Date :12/08/2010
(33) Name of priority country :U.S.A.
(86) International Application No :PCT/US2010/054983
Filing Date :01/11/2010
(87) International Publication No :WO 2012/021144
(61) Patent of Addition to Application Number :NA
Filing Date :NA
(62) Divisional to Application Number :NA
Filing Date :NA

(71)**Name of Applicant :**
1)NEW YORK UNIVERSITY
Address of Applicant :70 Washington Square New York NY 10012 U.S.A.
(72)**Name of Inventor :**
1)ARORA Paramjit S.
2)TOSOVSKA Petra
3)GUARRACINO Danielle
4)BULLOCK Brooke

(57) Abstract :
The present invention relates to oligooxopiperazines and their use. Methods for preparing oligooxopiperazines are also disclosed.

No. of Pages : 115 No. of Claims : 72

(12) PATENT APPLICATION PUBLICATION
(19) INDIA
(22) Date of filing of Application :22/03/2013
(21) Application No.2322/CHENP/2013 A
(43) Publication Date : 07/11/2014

(54) Title of the invention : NEXT INSTRUCTION TYPE FIELD

(51) International classification :G06F9/30,G06F9/38
(31) Priority Document No :1016072.9
(32) Priority Date :24/09/2010
(33) Name of priority country :U.K.
(86) International Application No :PCT/GB2011/051589
Filing Date :24/08/2011
(87) International Publication No :WO 2012/038713
(61) Patent of Addition to Application Number :NA
Filing Date :NA
(62) Divisional to Application Number :NA
Filing Date :NA

(71)**Name of Applicant :**
1)ARM LIMITED
Address of Applicant :110 Fulbourn Road Cherry Hinton Cambridge CB1 9NJ U.K.
(72)**Name of Inventor :**
1)NYSTAD Jorn

(57) Abstract :
A graphics processing unit core (26) includes a plurality of processing pipelines (38 40 42 44). A program instruction of a thread of program instructions being executed by a processing pipeline includes a next instruction type field (36) indicating an instruction type of a next program instruction following the current program instruction within the processing thread concerned. This next instruction type field is used to control selection of to which processing pipeline the next instruction is issued before that next instruction has been fetched and decoded. The next instruction type field may be passed along the processing pipeline as the least significant four bits within a program counter value associated with a current program instruction (32). The next instruction type field may also be used to control the forwarding of thread state variables between processing pipelines when a thread migrates between processing pipelines prior to the next program instruction being fetched or decoded.

No. of Pages : 29 No. of Claims : 27

(12) PATENT APPLICATION PUBLICATION
(19) INDIA
(22) Date of filing of Application :24/12/2012
(21) Application No.5369/CHE/2012 A
(43) Publication Date : 07/11/2014

(54) Title of the invention : EARTH QUAKE INFORMER

(51) International classification :H02H
(31) Priority Document No :NA
(32) Priority Date :NA
(33) Name of priority country :NA
(86) International Application No :NA
Filing Date :NA
(87) International Publication No : NA
(61) Patent of Addition to Application Number :NA
Filing Date :NA
(62) Divisional to Application Number :NA
Filing Date :NA

(71)**Name of Applicant :**
1)A. KRISHNAMOORTHY
Address of Applicant :NO.9, E BLOCK, SENIAMMAN KOIL NAGAR, TONDIARPET, CHENNAI - 600 081 Tamil Nadu India
(72)**Name of Inventor :**
1)A. KRISHNAMOORTHY

(57) Abstract :
Earth quake informer is a device which is invented for the safety of the public.

No. of Pages : 6 No. of Claims : 8

(12) PATENT APPLICATION PUBLICATION
(19) INDIA
(22) Date of filing of Application :19/07/2013
(21) Application No.5822/CHENP/2013 A
(43) Publication Date : 07/11/2014

(54) Title of the invention : RAPID TWO. STEP PARALLEL RECONTRUCTION FOR ARBITRARY K SPACE TRAJECTORIES INVOLVING A GRAPPA OPERATOR

(51) International classification :G01R33/561
(31) Priority Document No :61/426031
(32) Priority Date :22/12/2010
(33) Name of priority country :U.S.A.
(86) International Application No :PCT/IB2011/055765
Filing Date :19/12/2011
(87) International Publication No :WO 2012/085810
(61) Patent of Addition to Application Number :NA
Filing Date :NA
(62) Divisional to Application Number :NA
Filing Date :NA

(71)**Name of Applicant :**
1)KONINKLIJKE PHILIPS ELECTRONICS N.V.
Address of Applicant :High Tech Campus 5 NL 5656 AE Eindhoven Netherlands
(72)**Name of Inventor :**
1)LIN Wei
2)HUANG Feng
3)FUDERER Miha

(57) Abstract :
An imaging method comprises acquiring an undersampled magnetic resonance partially parallel imaging (MR PPI) dataset using a plurality of radio frequency receive coils and reconstructing the undersampled MR PPI dataset to generate a reconstructed magnetic resonance (MR) image. The reconstructing includes: (i) using a generalized auto calibrating partially parallel acquisition (GRAPPA) operator or direct convolution to fill in at least some missing data of the undersampled MR PPI dataset so as to generate an enhanced dataset; and (ii) using an algorithm other than a GRAPPA operator and other than direct convolution to reconstruct the enhanced dataset or to reconstruct the undersampled MR PPI dataset using the enhanced dataset as an initialization dataset for an iterative reconstruction algorithm. In some embodiments the MR PPI dataset is a non Cartesian dataset and a GRAPPA operator for wider radial bands (GROWL) is used in the operation (i).

No. of Pages : 38 No. of Claims : 20

(12) PATENT APPLICATION PUBLICATION
(19) INDIA
(22) Date of filing of Application :14/03/2013
(21) Application No.1081/CHE/2013 A
(43) Publication Date : 07/11/2014

(54) Title of the invention : POWER GENERATION CONTROL DEVICE IN IDLING STOP VEHICLE

(51) International classification :H02J
(31) Priority Document No :2012-063875
(32) Priority Date :21/03/2012
(33) Name of priority country :Japan
(86) International Application No :NA
Filing Date :NA
(87) International Publication No : NA
(61) Patent of Addition to Application Number :NA
Filing Date :NA
(62) Divisional to Application Number :NA
Filing Date :NA

(71)**Name of Applicant :**
1)HONDA MOTOR CO., LTD.
Address of Applicant :1-1, MINAMI-AOYAMA 2-CHOME, MINATO-KU, TOKYO, 107-8556 Japan
(72)**Name of Inventor :**
1)OSAWA, TOSHIFUMI
2)NAGATSUYU, TOSHIYA
3)KOBAYASHI, MASAKI
4)KAMON, KUNIHITO
5)OGINO, KAZUMASA

(57) Abstract :
To provide a power generation control device for a vehicle, which may always supply a proper charging voltage regardless of charge residual quantity of a battery without any alterations in an existing harness. [Solution] At the time tl, the increase control for the generation amount to increase the lag amount 9x is started. At the time t2, when the lag amount 9x exceeds the switching threshold 0ref and this state continues for a predetermined voltage boosting decision period A, at the time t3, the voltage boosting control to gradually and monotonously increase the target regulated voltage Vt at an increase rate AV is started. Subsequently, at the time t6, the decrease control for the generation amount to decrease the lag amount 9x is started. At the time t8, when the lag amount 0x falls below the switching threshold 6ref and this state continues for voltage drop decision period A, at the time tlO, the voltage drop control to gradually and monotonously decrease the target regulated voltage Vt at a decrease rate Av is started.

No. of Pages : 36 No. of Claims : 7

(12) PATENT APPLICATION PUBLICATION
(19) INDIA
(22) Date of filing of Application :21/03/2013
(21) Application No.1217/CHE/2013 A
(43) Publication Date : 07/11/2014

(54) Title of the invention : A RACEWAY SYSTEM FOR INTENSIVE FARMING OF PENAEID SHRIMP

(51) International classification :F16C
(31) Priority Document No :NA
(32) Priority Date :NA
(33) Name of priority country :NA
(86) International Application No :NA
Filing Date :NA
(87) International Publication No : NA
(61) Patent of Addition to Application Number :NA
Filing Date :NA
(62) Divisional to Application Number :NA
Filing Date :NA

(71)**Name of Applicant :**
1)TAMIL NADU VERTERINARY AND ANIMAL SCIENCES UNIVERSITY
Address of Applicant :MADHAVARAM MILK COLONY, CHENNAI 600 051 Tamil Nadu India
(72)**Name of Inventor :**
1)DR. S. FELIX

(57) Abstract :
A raceway system for intensive farming of penaeid shrimp comprising a plurality of raceway tanks (fig 1) constructed with precast cement concrete slabs with rounded corners and lined with nylon fabric sheet enclosed in a green house; the outlet of raceway tanks are connected to a harvesting tank of smaller size; A rapid sand filter for filtering the water to the supplied to raceways tanks and analyze a biological filter; an airlift system fitted with pumps for supplying air to the tanks.

No. of Pages : 11 No. of Claims : 2

(12) PATENT APPLICATION PUBLICATION
(19) INDIA
(22) Date of filing of Application :22/07/2013
(21) Application No.5852/CHENP/2013 A
(43) Publication Date : 07/11/2014

(54) Title of the invention : GUEST INSTRUCTION TO NATIVE INSTRUCTION RANGE BASED MAPPING USING A CONVERSION LOOK ASIDE BUFFER OF A PROCESSOR

(51) International classification :G06F9/06,G06F9/30,G06F9/305
(31) Priority Document No :61/436962
(32) Priority Date :27/01/2011
(33) Name of priority country :U.S.A.
(86) International Application No :PCT/US2012/022538
Filing Date :25/01/2012
(87) International Publication No:WO 2012/103209
(61) Patent of Addition to Application Number :NA
Filing Date :NA
(62) Divisional to Application Number :NA
Filing Date :NA

(71)**Name of Applicant :**
1)SOFT MACHINES INC.
Address of Applicant :3211 Scott Boulevard Suite 202 Santa Clara CA 95054 U.S.A.
(72)**Name of Inventor :**
1)ABDALLAH Mohammad

(57) Abstract :
A method for translating instructions for a processor. The method includes accessing a plurality of guest instructions that comprise multiple guest branch instructions and assembling the plurality of guest instructions into a guest instruction block. The guest instruction block is converted into a corresponding native conversion block. The native conversion block is stored into a native cache. A mapping of the guest instruction block to corresponding native conversion block is stored in a conversion look aside buffer. Upon a subsequent request for a guest instruction the conversion look aside buffer is indexed to determine whether a hit occurred wherein the mapping indicates whether the guest instruction has a corresponding converted native instruction in the native cache. The converted native instruction is forwarded for execution in response to the hit.

No. of Pages : 57 No. of Claims : 20

(12) PATENT APPLICATION PUBLICATION
(19) INDIA
(22) Date of filing of Application :05/09/2013
(21) Application No.7186/CHENP/2013 A
(43) Publication Date : 07/11/2014

(54) Title of the invention : NOVEL CARBOXYLIC ACID ESTER COMPOUND METHOD FOR PRODUCING SAME AND FRAGRANT COMPOSITION

(51) International classification	:C07C69/753,A61K8/37,A61Q13/00
(31) Priority Document No	:2011067952
(32) Priority Date	:25/03/2011
(33) Name of priority country	:Japan
(86) International Application No	:PCT/JP2012/057524
Filing Date	:23/03/2012
(87) International Publication No	:WO 2012/133189
(61) Patent of Addition to Application Number	:NA
Filing Date	:NA
(62) Divisional to Application Number	:NA
Filing Date	:NA

(71)**Name of Applicant :**
1)Mitsubishi Gas Chemical Company Inc.
Address of Applicant :5 2 Marunouchi 2 chome Chiyoda ku Tokyo 1008324 Japan
(72)**Name of Inventor :**
1)KITAMURA Mitsuharu

(57) Abstract :
Provided are: a novel carboxylic acid ester compound useful as a fragrant component or a compound fragrance element; a method for producing the carboxylic acid ester compound; and a fragrant composition containing the carboxylic acid ester compound. Further provided is an acyl fluoride of 2 4 dimethyl bicyclo[2.2.2]octane compound and an ester thereof which are useful as the starting material (including an intermediate in organic synthesis) of a drug an agricultural chemical a fragrance a functional resin an optically functional material an electronically functional material and the like. The carboxylic acid ester compound is represented by general formula (1). (In the formula one of R and R is a methyl group and the other of R and R is COOR R being an alkyl group having 1 4 carbon atoms.)

No. of Pages : 35 No. of Claims : 4

(12) PATENT APPLICATION PUBLICATION
(19) INDIA
(22) Date of filing of Application :10/01/2013
(21) Application No.237/CHENP/2013 A
(43) Publication Date : 07/11/2014

(54) Title of the invention : TRANSDERMAL ADMINISTRATION OF MEMANTINE

(51) International classification :A61K9/70,A61K31/13
(31) Priority Document No :10 2010 024 105.9
(32) Priority Date :17/06/2010
(33) Name of priority country :Germany
(86) International Application No :PCT/EP2011/002953
Filing Date :15/06/2011
(87) International Publication No :WO 2011/157416
(61) Patent of Addition to Application Number :NA
Filing Date :NA
(62) Divisional to Application Number :NA
Filing Date :NA

(71)**Name of Applicant :**
1)LTS LOHMANN THERAPIE SYSTEME AG
Address of Applicant :Lohmannstr. 2 56626 Andernach Germany
2)GRNENTHAL GMBH
(72)**Name of Inventor :**
1)HORSTMANN Michael
2)EIFLER Ren
3)KAUFMANN Regine
4)MOHR Patrick
5)GALIA Eric
6)PRANGE Wolfgang
7)BULLER Stefan
8)PUSECKER Klaus
9)STAMPFUSS Jan
10)STOELBEN Susanne

(57) Abstract :
The invention relates to transdermal therapeutic systems (TTS) which contain as active substance the NMDA receptor antagonist memantine or one of its physiologically acceptable salts. The TTS can be prepared and employed for the treatment of diseases of the central nervous system.

No. of Pages : 50 No. of Claims : 15

(12) PATENT APPLICATION PUBLICATION
(19) INDIA
(22) Date of filing of Application :28/03/2013
(21) Application No.2430/CHENP/2013 A
(43) Publication Date : 07/11/2014

(54) Title of the invention : VIDEO PRESENTATION APPARATUS VIDEO PRESENTATION METHOD AND STORAGE MEDIUM

(51) International classification :H04N7/173,H04S5/02
(31) Priority Document No :2010196830
(32) Priority Date :02/09/2010
(33) Name of priority country :Japan
(86) International Application No :PCT/JP2011/069618
Filing Date :30/08/2011
(87) International Publication No :WO 2012/029790
(61) Patent of Addition to Application Number :NA
Filing Date :NA
(62) Divisional to Application Number :NA
Filing Date :NA

(71)**Name of Applicant :**
1)SHARP KABUSHIKI KAISHA
Address of Applicant :22 22 Nagaike cho Abeno ku Osaka shi Osaka 5458522 Japan
(72)**Name of Inventor :**
1)NI Chanbin
2)SATO Junsei
3)HATTORI Hisao

(57) Abstract :
Provided is a video presentation apparatus wherein a user can easily comprehend the corresponding relationship between video and audio. The video presentation apparatus of the present invention sets a virtual sound source at the location where the video is displayed and forms a sound field that imitates a state wherein audio is generated from the virtual sound source.

No. of Pages : 46 No. of Claims : 8

(12) PATENT APPLICATION PUBLICATION
(19) INDIA
(22) Date of filing of Application :28/03/2013
(21) Application No.2431/CHENP/2013 A
(43) Publication Date : 07/11/2014

(54) Title of the invention : ADHESIVE COMPOUND FOR HOT SEALING INSERTS

(51) International classification :A41D27/02,A41D27/06,C09J133/00
(31) Priority Document No :10 2010 044 265.8
(32) Priority Date :02/09/2010
(33) Name of priority country :Germany
(86) International Application No :PCT/EP2011/003651
Filing Date :21/07/2011
(87) International Publication No :WO 2012/028229
(61) Patent of Addition to Application Number :NA
Filing Date :NA
(62) Divisional to Application Number :NA
Filing Date :NA

(71)**Name of Applicant :**
1)CARL FREUDENBERG KG
Address of Applicant :Hhnerweg 2 4 69469 Weinheim Germany
(72)**Name of Inventor :**
1)BARTL Heike
2)KINSCHERF Cornelia
3)STAUDENMAYER Oliver
4)SCHERBEL Ulrich

(57) Abstract :
The invention relates to an adhesive compound for a hot sealing insert to an insert that is equipped with said adhesive compound and to a method for fixing the insert. The adhesive compound consists of a thermoplastic hot melt adhesive (A) that is not adhesive at room temperature and a pressure sensitive adhesive (B) that is adhesive at room temperature.

No. of Pages : 25 No. of Claims : 9

(12) PATENT APPLICATION PUBLICATION
(19) INDIA
(22) Date of filing of Application :28/03/2013
(21) Application No.2432/CHENP/2013 A
(43) Publication Date : 07/11/2014

(54) Title of the invention : SUBSTITUTED N (2 ARYLAMINO)ARYL SULFONAMIDE CONTAINING COMBINATIONS

(51) International classification :A61K31/17,A61K31/18,A61K31/44
(31) Priority Document No :10185800.9
(32) Priority Date :01/10/2010
(33) Name of priority country :EPO
(86) International Application No :PCT/EP2011/067041
Filing Date :29/09/2011
(87) International Publication No :WO 2012/041987
(61) Patent of Addition to Application Number :NA
Filing Date :NA
(62) Divisional to Application Number :NA
Filing Date :NA

(71)**Name of Applicant :**
1)BAYER INTELLECTUAL PROPERTY GMBH
Address of Applicant :Alfred Nobel Strasse 10 40789 Monheim Germany
(72)**Name of Inventor :**
1)PHLER Florian
2)HITCHCOCK Marion

(57) Abstract :
The present invention relates to : combinations of : component A : one or more omega carboxyaryl substituted diphenyl urea compounds of general formula (I) or a physiologically acceptable salt solvate hydrate or stereoisomer thereof; component B : one or more N (2 arylamino) aryl sulfonamide compounds of general formula (II) or a physiologically acceptable salt solvate hydrate or stereoisomer thereof; and optionally component C : one or more further pharmaceutical agents; in which optionally some or all of the components are in the form of a pharmaceutical formulation which is ready for use to be administered simultaneously concurrently separately or sequentially. dependently of one another by the oral intravenous topical local installations intraperitoneal or nasal route; use of such combinations for the preparation of a medicament for the treatment or prophylaxis of a cancer; and a kit comprising such a combination.

No. of Pages : 91 No. of Claims : 10

(12) PATENT APPLICATION PUBLICATION
(19) INDIA
(22) Date of filing of Application :16/09/2013
(21) Application No.7456/CHENP/2013 A
(43) Publication Date : 07/11/2014

(54) Title of the invention : LITHOGRAPHIC PRINTING MASTER PLATE AND METHOD FOR MANUFACTURING LITHOGRAPHIC PRINTING PLATE

(51) International classification :G03F7/11,G03F7/00,G03F7/004
(31) Priority Document No :2011042496
(32) Priority Date :28/02/2011
(33) Name of priority country :Japan
(86) International Application No :PCT/JP2012/054056
Filing Date :21/02/2012
(87) International Publication No:WO 2012/117882
(61) Patent of Addition to Application Number :NA
Filing Date :NA
(62) Divisional to Application Number :NA
Filing Date :NA

(71)**Name of Applicant :**
1)FUJIFILM CORPORATION
Address of Applicant :26 30 Nishiazabu 2 chome Minato ku Tokyo 1060031 Japan
(72)**Name of Inventor :**
1)SUZUKI Hiroyuki
2)ABE Junya
3)NAKAYAMA Takafumi
4)TAKESHITA Kohei

(57) Abstract :
There are provided a lithographic printing plate having excellent printing durability and stain resistance as well as stain resistance over time; and a method for manufacturing a lithographic printing plate. A lithographic printing master plate includes a support a photosensitive layer provided on the support and another layer optionally provided between the support and the photosensitive layer; the photosensitive layer or the other layer adjacent to the support containing copolymer (A); and copolymer (A) having (al) repeating units having the structure represented by the following formula in the side chains and (a2) repeating units having at least one of the structures represented by formulas (a2 1) to (a2 6) in the side chains (where L is a single bonded divalent aromatic group having 6 to 14 carbons C(=O) O or C(=O) NR ; Z is a divalent linking group; R is a hydrogen atom alkyl group aryl group heterocyclic group sulfo group alkyl sulfonyl group or aryl sulfonyl group; and R R and R are hydrogen atoms halogen atoms or alkyl groups having 1 to 8 carbons.)

No. of Pages : 216 No. of Claims : 39

(12) PATENT APPLICATION PUBLICATION
(19) INDIA
(22) Date of filing of Application :27/03/2013
(21) Application No.2419/CHENP/2013 A
(43) Publication Date : 07/11/2014

(54) Title of the invention : THROTTLE POSITION DETECTOR FOR TWO WHEELED ELECTRIC VEHICLE

(51) International classification :B62J99/00,B60L15/00,B62K23/04
(31) Priority Document No :2010195036
(32) Priority Date :31/08/2010
(33) Name of priority country :Japan
(86) International Application No :PCT/JP2011/066360
Filing Date :19/07/2011
(87) International Publication No :WO 2012/029424
(61) Patent of Addition to Application Number :NA
Filing Date :NA
(62) Divisional to Application Number :NA
Filing Date :NA

(71)**Name of Applicant :**
1)HONDA MOTOR CO. LTD.
Address of Applicant :1 1 Minami Aoyama 2 chome Minato ku Tokyo 1078556 Japan
(72)**Name of Inventor :**
1)TSUKAMOTO Tomohiro
2)TOMINAGA Takashi
3)SHIBATA Kazumi
4)NISHIURA Hisao
5)KATO Seiji
6)AKUTSU Susumu

(57) Abstract :
Provided is a throttle position detector for a two wheeled electric vehicle having a swing arm the swing arm having a battery a motor a controller and other components disposed inside the arm. The swing arm (30) pivotally supports the rear wheel (WR) of a two wheeled electric vehicle (1) and is swingably mounted on a vehicle body. A battery (56) an electric motor (M) for driving the rear wheel (WR) and a board (50) as a control device for controlling the electric motor (M) are disposed inside the swing arm. Coupling a throttle grip (80) and a throttle position sensor (60) together by physical transmission means (62 85 86) provides a configuration in which the turning angle of the throttle grip (80) can be detected. The throttle position sensor (60) is mounted on the board (50). The board (50) is arranged so that the flat surface part thereof is oriented in the width direction of the vehicle. The throttle position sensor (60) is mounted on the surface of the board (50) that is located outside as viewed in the width direction of the vehicle so that the turning angle of a sensor shaft (65) is detected and the sensor shaft (65) is oriented in the width direction of the vehicle.

No. of Pages : 38 No. of Claims : 6

(12) PATENT APPLICATION PUBLICATION
(19) INDIA
(22) Date of filing of Application :27/03/2013
(21) Application No.2420/CHENP/2013 A
(43) Publication Date : 07/11/2014

(54) Title of the invention : AQUEOUS POLISHING COMPOSITIONS CONTAINING N SUBSTITUTED DIAZENIUM DIOXIDES AND/OR N HYDROXY DIAZENIUM OXIDE SALTS

(51) International classification :C09G1/02,C09G1/04,A01N51/00
(31) Priority Document No :61/380722
(32) Priority Date :08/09/2010
(33) Name of priority country :U.S.A.
(86) International Application No :PCT/IB2011/053891
Filing Date :06/09/2011
(87) International Publication No :WO 2012/032466
(61) Patent of Addition to Application Number :NA
Filing Date :NA
(62) Divisional to Application Number :NA
Filing Date :NA

(71)**Name of Applicant :**
1)BASF SE
Address of Applicant :67056 Ludwigshafen Germany
2)BASF (CHINA) COMPANY LIMITED
(72)**Name of Inventor :**
1)NOLLER Bastian
2)FRANZ Diana
3)LI Yuzhuo
4)USMAN IBRAHIM Sheik Ansar
5)PINDER Harvey Wayne
6)VENKATARAMAN Shyam Sundar

(57) Abstract :
An aqueous polishing composition comprising (A) at least one water soluble or water dispersible compound selected from the group consisting of N substituted diazenium dioxides and N hydroxy diazenium oxide salts; and (B) at least one type of abrasive particles; the use of the compounds (A) for manufacturing electrical mechanical and optical devices and a process for polishing substrate materials for electrical mechanical and optical devices making use of the aqueous polishing composition.

No. of Pages : 36 No. of Claims : 18

(12) PATENT APPLICATION PUBLICATION
(19) INDIA
(22) Date of filing of Application :04/09/2013
(21) Application No.7138/CHENP/2013 A
(43) Publication Date : 07/11/2014

(54) Title of the invention : APPARATUS INCLUDING MULTIPLE TOUCH SCREENS AND METHOD OF CHANGING SCREENS THEREIN

(51) International classification :G06F3/03,G06F3/14,G06F3/041
(31) Priority Document No :61/441491
(32) Priority Date :10/02/2011
(33) Name of priority country :U.S.A.
(86) International Application No :PCT/KR2012/001008
Filing Date :10/02/2012
(87) International Publication No:WO 2012/108722
(61) Patent of Addition to Application Number :NA
Filing Date :NA
(62) Divisional to Application Number :NA
Filing Date :NA

(71)**Name of Applicant :**
1)SAMSUNG ELECTRONICS CO. LTD.
Address of Applicant :129 Samsung ro Yeongtong gu Suwon si Gyeonggi do 443 742 Republic of Korea
(72)**Name of Inventor :**
1)SEO Joon Kyu
2)KIM Hyun Jin
3)LEE Ju Youn
4)PARK Min Kyu

(57) Abstract :
An apparatus and method of changing screens using multiple touch screens. The method includes displaying a first screen in a first touch screen; displaying a second screen in a second touch screen; detecting multiple touches in the first touch screen; detecting continuous movements of the multiple touches from the first touch screen to the second touch screen; and changing the second screen of the second touch screen in response to the continuous movements of the multiple touches.

No. of Pages : 36 No. of Claims : 12

(12) PATENT APPLICATION PUBLICATION
(19) INDIA
(22) Date of filing of Application :17/09/2013
(21) Application No.7529/CHENP/2013 A
(43) Publication Date : 07/11/2014

(54) Title of the invention : CONTINUOUS VOICE AUTHENTICATION FOR A MOBILE DEVICE

(51) International classification :H04L29/06,H04W12/12
(31) Priority Document No :13/076241
(32) Priority Date :30/03/2011
(33) Name of priority country :U.S.A.
(86) International Application No :PCT/US2012/031551
Filing Date :30/03/2012
(87) International Publication No :WO 2012/135681
(61) Patent of Addition to Application Number :NA
Filing Date :NA
(62) Divisional to Application Number :NA
Filing Date :NA

(71)**Name of Applicant :**
1)QUALCOMM Incorporated
Address of Applicant :Attn: International Ip Administration 5775 Morehouse Drive San Diego California 92121 U.S.A.
(72)**Name of Inventor :**
1)JOHNSGARD Todd J.
2)SIU Ta yan
3)SHI Guangming

(57) Abstract :
Disclosed is an apparatus system and method to continuously authenticate a user of a mobile device. The mobile device includes a user interface a transceiver a microphone and processor. The processor continuously samples a users voice from the microphone during a call by obtaining voice snippets on a pre defined periodic basis or on a random basis. The processor further compares the sampled voice from the microphone to a stored voice to authenticate a valid user wherein if the sampled voice matches the stored voice for a valid user functionality of the mobile device continues. On the other hand if the sampled voice does not match the stored voice for a valid user functionality of the mobile device is locked.

No. of Pages : 32 No. of Claims : 29

(12) PATENT APPLICATION PUBLICATION
(19) INDIA
(22) Date of filing of Application :19/03/2013
(21) Application No.1179/CHE/2013 A
(43) Publication Date : 07/11/2014

(54) Title of the invention : INDOOR UNIT OF AIR-CONDITIONING APPARATUS

(51) International classification :G04G
(31) Priority Document No :2012-083769
(32) Priority Date :02/04/2012
(33) Name of priority country :Japan
(86) International Application No :NA
Filing Date :NA
(87) International Publication No : NA
(61) Patent of Addition to Application Number :NA
Filing Date :NA
(62) Divisional to Application Number :NA
Filing Date :NA

(71)**Name of Applicant :**
1)MITSUBISHI ELECTRIC CORPORATION
Address of Applicant :7-3, MARUNOUCHI 2-CHOME, CHIYODA-KU, TOKYO 100-8310 Japan
(72)**Name of Inventor :**
1)MATSUMOTO, TAKASHI

(57) Abstract :
An indoor unit of an air-conditioning apparatus is provided, in which an air-conditioning condition changed based on a gesture corresponds to an air-conditioning condition displayed on a display device of a remote controller. With an indoor unit 100, when a user U1 performs a predetermined motion (S1-1), a controller 70 determines the motion of the user U1 (S1-2), recognizes that a gesture instruction condition is instructed (S1-3), controls a heat exchanger 4 and other devices based on the gesture instruction signal (S1-4), and causes the gesture instruction signal to be sent to a remote-controller communication device 85 (S1-5). When a remote controller 80 receives the gesture instruction signal (S1-6), the gesture instruction condition is displayed on a remote-controller display device 82 (S1-7), and buzzer sound (electronic beeper sound) is output from a remote-controller sound output device 83 (S1-8).

No. of Pages : 54 No. of Claims : 10

(12) PATENT APPLICATION PUBLICATION
(19) INDIA
(22) Date of filing of Application :25/03/2013
(21) Application No.1283/CHE/2013 A
(43) Publication Date : 07/11/2014

(54) Title of the invention : METHOD FOR USE IN CONNECTION WITH AN EXHAUST GAS POST-TREATMENT SYSTEM

(51) International classification	:F01N
(31) Priority Document No	:10 2012 006 449.7
(32) Priority Date	:30/03/2012
(33) Name of priority country	:Germany
(86) International Application No	:NA
Filing Date	:NA
(87) International Publication No	: NA
(61) Patent of Addition to Application Number	:NA
Filing Date	:NA
(62) Divisional to Application Number	:NA
Filing Date	:NA

(71)**Name of Applicant :**
1)MAN TRUCK & BUS AG
Address of Applicant :DACHAUER STR. 667, 80995 MUNCHEN Germany
(72)**Name of Inventor :**
1)DORING, ANDREAS

(57) Abstract :
Method for use in connection with an exhaust gas post-treatment system used on an internal combustion engine operated with air surplus and wherein the nitrous oxides are reduced in that an ammonia-separating reducing agent is added to the exhaust gas flow upstream of a catalyst which is charged with a catalyst material for selective catalytic reduction of nitrous oxides. The method provides that the NH3 to NOx ratio (feed ratio a) is varied in phases by changing the untreated nitrous oxide emissions of the internal combustion engine such that the feed ratio a oscillates in phases about a predefined value.

No. of Pages : 24 No. of Claims : 11

(12) PATENT APPLICATION PUBLICATION
(19) INDIA
(22) Date of filing of Application :10/01/2013
(21) Application No.145/CHE/2013 A
(43) Publication Date : 07/11/2014

(54) Title of the invention : A SIMPLE METHOD TO CONTROL WATER HYACINTH (EICHORNNIA CRASSIPES) A COMMON AQUATIC WEED

(51) International classification :C02F
(31) Priority Document No :NA
(32) Priority Date :NA
(33) Name of priority country :NA
(86) International Application No :NA
Filing Date :NA
(87) International Publication No : NA
(61) Patent of Addition to Application Number :NA
Filing Date :NA
(62) Divisional to Application Number :NA
Filing Date :NA

(71)**Name of Applicant :**
1) NAYEEM ULLAH KHAN
Address of Applicant :#10, 4TH CROSS, K-S, LAYOUT, OPP. DAYANANDA SAGAR COLLEGE BANGALORE-560078 Karnataka India
(72)**Name of Inventor :**
1)JAYARAMA REDDY
2)DR. P.K. SHETTY
3)MATHEWS P. RAJ

(57) Abstract :
Eichornnia crassipes is the most common exotic aquatic weed in India. It pollutes and hastens the eutrophication of ponds and lakes (stationary water bodies). In some places it has led to the complete elimination of lakes and ponds. No effective methods are available for controlling this obnoxious weed. The weed is a major contributing factor for the ecocrisis leading to depletion of major water bodies. The invention aims at management and control of the weed using a simple method of spraying common salt. The level of salt can be monitored by simple estimation of chloride. Hence the use of salt can be monitored and maintained at environmentally safe levels. Key words: Eichornnia crassipes, control, NaCl, Water Hyacinth

No. of Pages : 4 No. of Claims : 3

(12) PATENT APPLICATION PUBLICATION
(19) INDIA
(22) Date of filing of Application :02/10/2013
(21) Application No.7971/CHENP/2013 A
(43) Publication Date : 07/11/2014

(54) Title of the invention : SYSTEM APPARATUS AND METHOD FOR ALIGNING REGISTERS

(51) International classification :G06F9/06,G06F9/30
(31) Priority Document No :13/078868
(32) Priority Date :01/04/2011
(33) Name of priority country :U.S.A.
(86) International Application No :PCT/US2012/031202
Filing Date :29/03/2012
(87) International Publication No :WO 2012/135494
(61) Patent of Addition to Application Number :NA
Filing Date :NA
(62) Divisional to Application Number :NA
Filing Date :NA

(71)**Name of Applicant :**
1)INTEL CORPORATION
Address of Applicant :2200 Mission College Boulevard MS: RNB 4 150 Santa Clara California 95052 U.S.A.
(72)**Name of Inventor :**
1)SAN ADRIAN Jesus Corbal
2)SANS Roger Espasa
3)GIRKAR Milind Baburao
4)WU Lisa K.
5)BRADFORD Dennis R.
6)LEE Victor W.

(57) Abstract :
Embodiments of systems apparatuses and methods for performing an align instruction in a computer processor are described. In some embodiments the execution of an align instruction causes the selective storage of data elements of two concatenated sources to be stored in a destination.

No. of Pages : 59 No. of Claims : 19

(12) PATENT APPLICATION PUBLICATION
(19) INDIA
(22) Date of filing of Application :02/10/2013
(21) Application No.7972/CHENP/2013 A
(43) Publication Date : 07/11/2014

(54) Title of the invention : DECORATED THERMOPLASTIC FILM AND METHODS FOR MAKING THE SAME

(51) International classification :B29C45/14,B32B27/08
(31) Priority Document No :61/450312
(32) Priority Date :08/03/2011
(33) Name of priority country :U.S.A.
(86) International Application No :PCT/US2012/028244
Filing Date :08/03/2012
(87) International Publication No :WO 2012/122360
(61) Patent of Addition to Application Number :NA
Filing Date :NA
(62) Divisional to Application Number :NA
Filing Date :NA

(71)**Name of Applicant :**
1)ZOMAZZ
Address of Applicant :965 Portola Drive Del Ray Oaks CA 93940 U.S.A.
(72)**Name of Inventor :**
1)DRAKE Jonathan

(57) Abstract :
The present invention is directed to variably decorative thermoplastic films having a graphic design saturated into a laminate or coated substrate which can be pre formed using heat and pressure and then placed in injection molds for product molding without impacting the quality of the graphics.

No. of Pages : 17 No. of Claims : 34

(12) PATENT APPLICATION PUBLICATION
(19) INDIA
(22) Date of filing of Application :19/03/2013
(21) Application No.2166/CHENP/2013 A
(43) Publication Date : 07/11/2014

(54) Title of the invention : NOVEL PIPERAZINE ANALOGS WITH SUBSTITUTED HETEROARYL GROUPS AS BROAD SPECTRUM INFLUENZA ANTIVIRALS

(51) International classification :C07D403/06,C07D413/06,C07D413/14
(31) Priority Document No :61/387186
(32) Priority Date :28/09/2010
(33) Name of priority country :U.S.A.
(86) International Application No :PCT/US2011/052965
Filing Date :23/09/2011
(87) International Publication No :WO 2012/044531
(61) Patent of Addition to Application Number :NA
Filing Date :NA
(62) Divisional to Application Number :NA
Filing Date :NA

(71)**Name of Applicant :**
1)BRISTOL MYERS SQUIBB COMPANY
Address of Applicant :Route 206 and Province Line Road Princeton New Jersey 08543 4000 U.S.A.
(72)**Name of Inventor :**
1)CIANCI Christopher W.
2)GERRITZ Samuel
3)KIM Sean
4)LANGLEY David R.
5)LI Guo
6)PEARCE Bradley C.
7)PENDRI Annapurna
8)SHI Shuhao
9)ZHAI Weixu
10)ZHU Shirong

(57) Abstract :
A compound of the following Formula (I) is set forth, including pharmaceutically acceptable salts thereof: wherein Het is a 5 or 6-membered hetercycle with -N, -O, or -S adjacent to the -Ar substituent or adjacent to the point of attachment for the -Ar substituent; Ar is aryl or heteroary; R is -CH3, -CH2F, -CHF2 or -CH-CH2; V is -H, -CH3 or =0; W is -No2, -CI, -Br, -CH2OH, or -CH; X is -CI, -Br, -F, -CH3, -OCH3, or -CN; Y is CH or -N; and Z is -CH or -N. This compound is useful in compositions for the prevention and treatment of influenza virus.

No. of Pages : 99 No. of Claims : 25

(12) PATENT APPLICATION PUBLICATION
(19) INDIA
(22) Date of filing of Application :20/03/2013
(21) Application No.2220/CHENP/2013 A
(43) Publication Date : 07/11/2014

(54) Title of the invention : MOLDING HOOK AND LOOP FASTENER

(51) International classification :A44B18/00
(31) Priority Document No :NA
(32) Priority Date :NA
(33) Name of priority country :NA
(86) International Application No :PCT/JP2010/064196
Filing Date :23/08/2010
(87) International Publication No :WO 2012/025980
(61) Patent of Addition to Application Number :NA
Filing Date :NA
(62) Divisional to Application Number :NA
Filing Date :NA

(71)**Name of Applicant :**
1)YKK CORPORATION
Address of Applicant :1 Kanda Izumi cho Chiyoda ku Tokyo 1018642 Japan
(72)**Name of Inventor :**
1)TERADA Mineto
2)IMAI Shinichi
3)ABE Hiromasa

(57) Abstract :
For this molding hook and loop fastener (1 2) barriers (20 80) standing near the right and left edges of a substrate (10) have two or more vertical wall arrays (21 81). The vertical wall arrays (21 81) have a plurality of vertical walls (24 84) that are alternately disposed. Between two adjacent alternately disposed arrays of the vertical walls (24 84) each vertical wall (24 84) disposed in one of the arrays is connected by connecting parts (22 82) to two of the vertical walls (24 84) disposed in the other array. The connecting parts (22 82) connect one end of one set of vertical walls (24 84) disposed in adjacent arrays with the other ends of the other set of vertical walls (24 82). Said molding hook and loop fastener (1 2) is thereby able to separate the inside of the barriers (20 80) from the outside thereof by means of the vertical wall arrays (21 81) and connecting parts (22 82) while flexibility of the molding hook and loop fastener (1 2) is also improved.

No. of Pages : 76 No. of Claims : 8

(12) PATENT APPLICATION PUBLICATION
(19) INDIA
(22) Date of filing of Application :20/03/2013
(21) Application No.2221/CHENP/2013 A
(43) Publication Date : 07/11/2014

(54) Title of the invention : LITHIUM TITANIUM COMPOSITE OXIDE ELECTRODE MATERIAL CONJUGATED WITH FINE CARBON FIBERS

(51) International classification :H01M4/485,H01M4/36
(31) Priority Document No :2010189907
(32) Priority Date :26/08/2010
(33) Name of priority country :Japan
(86) International Application No :PCT/JP2011/069216
Filing Date :25/08/2011
(87) International Publication No :WO 2012/026544
(61) Patent of Addition to Application Number :NA
Filing Date :NA
(62) Divisional to Application Number :NA
Filing Date :NA

(71)**Name of Applicant :**
1)UBE INDUSTRIES LTD.
Address of Applicant :1978 96 Oaza Kogushi Ube shi Yamaguchi 7558633 Japan
(72)**Name of Inventor :**
1)TAKEMOTO Hirofumi
2)HASHIMOTO Kazuo
3)HITAKA Atsuo

(57) Abstract :
The present invention provides a secondary battery electrode material characterized in that the interior and surface of a lithium titanium composite oxide is conjugated with fine carbon fibers forming a reticulate structure.

No. of Pages : 51 No. of Claims : 21

(12) PATENT APPLICATION PUBLICATION
(19) INDIA
(22) Date of filing of Application :20/03/2013
(21) Application No.2222/CHENP/2013 A
(43) Publication Date : 07/11/2014

(54) Title of the invention : TOUCH SENSITIVE ELECTRONIC DEVICE

(51) International classification :G06F3/048,G06F3/041,G06F3/14
(31) Priority Document No :1020177.0
(32) Priority Date :29/11/2010
(33) Name of priority country :U.K.
(86) International Application No :PCT/JP2011/073469
Filing Date :05/10/2011
(87) International Publication No :WO 2012/073598
(61) Patent of Addition to Application Number :NA
Filing Date :NA
(62) Divisional to Application Number :NA
Filing Date :NA

(71)**Name of Applicant :**
1)NEC CASIO MOBILE COMMUNICATIONS LTD.
Address of Applicant :1753 Shimonumabe Nakahara ku Kawasaki shi Kanagawa 2118666 Japan
(72)**Name of Inventor :**
1)EZRA Dean
2)DUXBURY Robert

(57) Abstract :
The present invention provides for a touch sensitive electronic device having at least first and second touch screens interface control means for touch selection of content displayed on the screens and wherein the interface control means is arranged such that as touch selection on the first screen reaches an end location the selected portion of content is saved and touch selection functionality is arranged to continue at a start location on the second screen and also provides for a related method allowing for touch selection of content extending across both screens so that such content can be selected in a unitary manner.

No. of Pages : 26 No. of Claims : 21

(12) PATENT APPLICATION PUBLICATION
(19) INDIA
(22) Date of filing of Application :03/10/2013
(21) Application No.7996/CHENP/2013 A
(43) Publication Date : 07/11/2014

(54) Title of the invention : A LIGHTING DEVICE A LAMP AND A LUMINAIRE

(51) International classification :F21K99/00,F21V7/00
(31) Priority Document No :11158459.5
(32) Priority Date :16/03/2011
(33) Name of priority country :EPO
(86) International Application No :PCT/IB2012/050917
Filing Date :28/02/2012
(87) International Publication No :WO 2012/123841
(61) Patent of Addition to Application Number :NA
Filing Date :NA
(62) Divisional to Application Number :NA
Filing Date :NA

(71)**Name of Applicant :**
1)KONINKLIJKE PHILIPS N.V.
Address of Applicant :High Tech Campus 5 NL 5656 AE Eindhoven Netherlands
(72)**Name of Inventor :**
1)VAN BOMMEL Ties
2)HIKMET Rifat Ata Mustafa

(57) Abstract :
A lighting device 100 a lamp and a luminaire is provided. The light device100 emits a first color distribution predominantly in a first direction and a second color distribution predominantly in a second direction. The lighting device comprises a light exit window a light source 118 a light distributing layer 108 and a luminescent material. Light 104 106 is emitted into the ambient of the lighting device through the light exit window. The light exit window has a first part 110 for an escape of light of the first color distribution and a second part 102 for an escape of light of the second color distribution. The second part 102 is different from the first part 110. The light source emits light of a predefined color distribution. The predefined color distribution comprises light of a first color106. The light distributing layer 108 partly reflects or backscatters impinging light and partly transmits impinging light. The light distributing layer 108 is arranged in between the light source 118 and the second part 102 of the light exit window. The light distributing layer108 is not fully transparent and has an edge near the light exit window for separating the first part 110 and the second part 102. The luminescent material converts light of the first color 106 to light of a second color 104. The luminescent material is arranged in the light distributing layer 108 is arranged in between the light distributing layer 108 and the second part 102 of the light exit window or is arranged at the first part 110 of the light exit window or the second part 102 of the light exit window.

No. of Pages : 30 No. of Claims : 14

(12) PATENT APPLICATION PUBLICATION
(19) INDIA
(22) Date of filing of Application :28/03/2013
(21) Application No.2450/CHENP/2013 A
(43) Publication Date : 07/11/2014

(54) Title of the invention : SEMI STABLE PRODUCTION OF LENTIVIRAL VECTORS

(51) International classification	:C12N15/866,C12N15/867,C12N7/02
(31) Priority Document No	:10175088.3
(32) Priority Date	:02/09/2010
(33) Name of priority country	:EPO
(86) International Application No	:PCT/EP2011/065089
Filing Date	:01/09/2011
(87) International Publication No	:WO 2012/028680
(61) Patent of Addition to Application Number	:NA
Filing Date	:NA
(62) Divisional to Application Number	:NA
Filing Date	:NA

(71)**Name of Applicant :**
1)MOLMED SPA
Address of Applicant :Via Olgettina 58 I 20132 Milan Italy
(72)**Name of Inventor :**
1)BOVOLENTA Chiara
2)STORNAIUOLO Anna
3)RIZZARDI Paolo
4)MAVILIO Fulvio

(57) Abstract :
The present invention provides a new semi stable packaging cell line and a method to produce lentiviral vectors (LV) using the semi stable packaging cell line. New methods and packaging cell lines of the invention are generated using a baculo AAV hybrid system for stable expression of structural and regulatory lentiviral proteins such system comprising a baculoviral backbone containing an integration cassette flanked by AAV ITRs in combination with a plasmid encoding rep protein. This system allows to obtain a stable integration of the structural and regulatory HIV 1 proteins gag/pol and rev. The system allows to obtain a cell line including the structural and regulatory HIV proteins gag/pol and rev to be used for a semi stable LV production.

No. of Pages : 36 No. of Claims : 19

(12) PATENT APPLICATION PUBLICATION
(19) INDIA
(22) Date of filing of Application :15/07/2013
(21) Application No.5628/CHENP/2013 A
(43) Publication Date : 07/11/2014

(54) Title of the invention : ENVIRONMENTALLY FRIENDLY MOUSE PROOF AND TERMITE PROOF ELECTRIC CABLE WITH VOLTAGE EQUAL TO OR BELOW 35KV

(51) International classification :H01B7/17
(31) Priority Document No :201020694176.9
(32) Priority Date :31/12/2010
(33) Name of priority country :China
(86) International Application No :PCT/CN2011/002182
Filing Date :26/12/2011
(87) International Publication No :WO 2012/088764
(61) Patent of Addition to Application Number :NA
Filing Date :NA
(62) Divisional to Application Number :NA
Filing Date :NA

(71)**Name of Applicant :**
1)SHANDONG HUANENG CABLE LIMITED COMPANY
Address of Applicant :No. 112 Pingxingnanlu Tengzhou Shandong 277500 China
(72)**Name of Inventor :**
1)CAO Bingying
2)CAO Deli

(57) Abstract :
An environmentally friendly mouse proof and termite proof electric cable with a voltage equal to or below 35kV from inside to outside includes successively: a cable core an inner protective layer (3) and a mouse proof and termite proof layer (2) made of nonmagnetic metal material is arranged on the periphery of the inner protective layer (3). Since the material of the mouse proof and termite proof layer itself is pollution free rust proof and capable of preventing damage by mice and termites redundant by adding the mouse proof and termite proof layer (2) made of non magnetic material outside the inner protective layer (3) improves the safety performance when using cable wires is improved and the safe use of cable wires in areas with abundant mice or termites is ensured in a physical way.

No. of Pages : 6 No. of Claims : 5

(12) PATENT APPLICATION PUBLICATION
(19) INDIA
(22) Date of filing of Application :03/10/2013
(21) Application No.8001/CHENP/2013 A
(43) Publication Date : 07/11/2014

(54) Title of the invention : PATIENT VIRTUAL ROUNDING WITH CONTEXT BASED CLINICAL DECISION SUPPORT

(51) International classification :G06F19/00
(31) Priority Document No :61/453148
(32) Priority Date :16/03/2011
(33) Name of priority country :U.S.A.
(86) International Application No :PCT/IB2012/051175
Filing Date :13/03/2012
(87) International Publication No :WO 2012/123892
(61) Patent of Addition to Application Number :NA
Filing Date :NA
(62) Divisional to Application Number :NA
Filing Date :NA

(71)**Name of Applicant :**
1)KONINKLIJKE PHILIPS N.V.
Address of Applicant :High Tech Campus 5 NL 5656 AE Eindhoven Netherlands
(72)**Name of Inventor :**
1)ROCK Joseph Ernest
2)NIKOLOVA SIMONS Mariana
3)CHEUNG Amy Oi Mee

(57) Abstract :
A method and computer readable storage medium for identifying context attributes and generating a context based list of tasks for a user with respect to the identified context attributes. A device having a processor identifying context attributes and generating a context based list of tasks for a user with respect to the identified context attributes. The device further including a memory storing at least one of clinical guidelines and patient data wherein the processor generates a master list of tasks with respect to the at least one of the clinical guidelines and patient data.

No. of Pages : 21 No. of Claims : 21

(12) PATENT APPLICATION PUBLICATION
(19) INDIA
(22) Date of filing of Application :03/10/2013
(21) Application No.8002/CHENP/2013 A
(43) Publication Date : 07/11/2014

(54) Title of the invention : MEDICAL IMAGING DEVICE FOR PROVIDING AN IMAGE REPRESENTATION SUPPORTING IN POSITIONING AN INTERVENTION DEVICE

(51) International classification :A61B6/06,A61B6/12
(31) Priority Document No :11305285.6
(32) Priority Date :15/03/2011
(33) Name of priority country :EPO
(86) International Application No :PCT/IB2012/051021
Filing Date :05/03/2012
(87) International Publication No :WO 2012/123850
(61) Patent of Addition to Application Number :NA
Filing Date :NA
(62) Divisional to Application Number :NA
Filing Date :NA

(71)**Name of Applicant :**
1)KONINKLIJKE PHILIPS N.V.
Address of Applicant :High Tech Campus 5 NL 5656 AE Eindhoven Netherlands
(72)**Name of Inventor :**
1)FLORENT Raoul
2)HOORNAERT Bart Pierre Antoine Jozef
3)STEGEHUIS Herman

(57) Abstract :
A medical imaging device and a method for providing an image representation supporting positioning of an intervention device such as a wire tip (4) in a region of interest during an intervention is proposed. Therein the following process steps are to be performed: (S1) acquiring a pre live anatomy image (1) including a region of interest; (S2) acquiring a live anatomy image using a live image acquisition device comprising an adjustable collimator device; (S3) identifying a location (5) of the intervention device (4) within the live anatomy image; (S4) adjusting settings of the collimator device based on the identified location of the intervention device for subsequently acquiring a further live anatomy image representing the region of interest using the live image acquisition device with the collimator device being in the adjusted settings; and providing (S5) the image representation by merging information from the live anatomy image into the pre live anatomy image.. Thereby the intervention device may be continuously tracked and the collimator device may restrict a field of view to a location of the intervention device thereby significantly reducing an applied X ray dose. Background anatomical information may be introduced into the final image representation using the pre live anatomy image possibly having a higher image contrast than the live anatomy images.

No. of Pages : 21 No. of Claims : 15

(12) PATENT APPLICATION PUBLICATION
(19) INDIA
(22) Date of filing of Application :03/10/2013
(21) Application No.8003/CHENP/2013 A
(43) Publication Date : 07/11/2014

(54) Title of the invention : LIKELIHOOD BASED SPECTRAL DATA PROJECTION DOMAIN DE NOISING

(51) International classification :G06T11/00
(31) Priority Document No :61/452825
(32) Priority Date :15/03/2011
(33) Name of priority country :U.S.A.
(86) International Application No :PCT/IB2012/050985
Filing Date :02/03/2012
(87) International Publication No :WO 2012/123845
(61) Patent of Addition to Application Number :NA
Filing Date :NA
(62) Divisional to Application Number :NA
Filing Date :NA

(71)**Name of Applicant :**
1)KONINKLIJKE PHILIPS N.V.
Address of Applicant :High Tech Campus 5 NL 5656 AE Eindhoven Netherlands
2)PHILIPS INTELLECTUAL PROPERTY & STANDARDS GMBH
(72)**Name of Inventor :**
1)ROESSL Ewald
2)PROKSA Roland

(57) Abstract :
A method for processing projection data in the projection domain includes receiving the projection data. The projection data is generated by a spectral detector and includes two or more independent energy resolved measurements in which at least one of the two or more measurements has first photon statistics. The method further includes generating a de noised measurement in electronic format for the at least one of the two or more measurements having the first photon statistics. The de noised measurement has second photon statistics which are better than the first photon statistics.

No. of Pages : 22 No. of Claims : 21

(12) PATENT APPLICATION PUBLICATION
(19) INDIA
(22) Date of filing of Application :03/10/2013
(21) Application No.8005/CHENP/2013 A
(43) Publication Date : 07/11/2014

(54) Title of the invention : NESTED KEY ASSEMBLY

(51) International classification :H01H13/705
(31) Priority Document No :11158062.7
(32) Priority Date :14/03/2011
(33) Name of priority country :EPO
(86) International Application No :PCT/IB2012/051061
Filing Date :07/03/2012
(87) International Publication No :WO 2012/123855
(61) Patent of Addition to Application Number :NA
Filing Date :NA
(62) Divisional to Application Number :NA
Filing Date :NA

(71)**Name of Applicant :**
1)KONINKLIJKE PHILIPS N.V.
Address of Applicant :High Tech Campus 5 NL 5656 AE Eindhoven Netherlands
(72)**Name of Inventor :**
1)HAN Fei

(57) Abstract :
The invention relates to a nested key assembly(101) that can for example be used in a remote control a mobile phone or the like. In general the key assembly comprises at least one inner key(130;140) surrounded by an outer key(120;130) wherein the inner key(130;140) comprises at least one flexible arm(132;142) that extends below the outer key(120;130) and that directly or indirectly touches a carrier structure(110 150). In a preferred embodiment the key assembly comprises an OK key(140) surrounded by a cursor key(130) which in turn is surrounded by a diamond key(120). The OK key(140) comprises flexible arms(142) that extend below the cursor key while the cursor key(130) comprises flexible arms(132) that extend below the diamond key(120).

No. of Pages : 15 No. of Claims : 12

(12) PATENT APPLICATION PUBLICATION
(19) INDIA
(22) Date of filing of Application :03/10/2013
(21) Application No.8006/CHENP/2013 A
(43) Publication Date : 07/11/2014

(54) Title of the invention : HUMIDIFIER WITH LIQUID INGRESS PROTECTION

(51) International classification :A61M16/16
(31) Priority Document No :61/452193
(32) Priority Date :14/03/2011
(33) Name of priority country :U.S.A.
(86) International Application No :PCT/IB2012/051041
Filing Date :06/03/2012
(87) International Publication No :WO 2012/123854
(61) Patent of Addition to Application Number :NA
Filing Date :NA
(62) Divisional to Application Number :NA
Filing Date :NA

(71)**Name of Applicant :**
1)KONINKLIJKE PHILIPS N.V.
Address of Applicant :High Tech Campus 5 NL 5656 AE Eindhoven Netherlands
(72)**Name of Inventor :**
1)DIMATTEO Mark William
2)BARCLAY Mark

(57) Abstract :
A pressure support device includes a humidification system (10) to control the humidity of a pressurized flow of breathable gas generated by the pressure support device. The humidification system includes a liquid storage chamber (32) and a humidification chamber (34). When in an operational orientation liquid travels from the liquid storage chamber to the humidification chamber through a serpentine feed path (38) due to gravity. The serpentine shape of feed path halts the flow of liquid responsive to the device being tilted out of an operational orientation.

No. of Pages : 31 No. of Claims : 18

(12) PATENT APPLICATION PUBLICATION
(19) INDIA
(22) Date of filing of Application :03/10/2013
(21) Application No.8007/CHENP/2013 A
(43) Publication Date : 07/11/2014

(54) Title of the invention : DEFROSTER FOR OXYGEN LIQUEFIER

(51) International classification :F25J1/00
(31) Priority Document No :61/452206
(32) Priority Date :14/03/2011
(33) Name of priority country :U.S.A.
(86) International Application No :PCT/IB2012/051115
Filing Date :09/03/2012
(87) International Publication No :WO 2012/123872
(61) Patent of Addition to Application Number :NA
Filing Date :NA
(62) Divisional to Application Number :NA
Filing Date :NA

(71)**Name of Applicant :**
1)KONINKLIJKE PHILIPS N.V.
Address of Applicant :High Tech Campus 5 NL 5656 AE Eindhoven Netherlands
(72)**Name of Inventor :**
1)BROUQUEYRE Laurent
2)DICKERSON Brian Edward

(57) Abstract :
An oxygen liquefier system may be configured to defrost an oxygen line included therein. The system may include one or more sieve beds a liquid oxygen reservoir an oxygen line a controller a heating apparatus and/or other components. The one or more sieve beds are configured to extract oxygen from air obtained from an ambient environment. The liquid oxygen reservoir is configured to store oxygen extracted at the one or more sieve beds that has been liquefied. The oxygen line is configured to provide fluid communication between the one or more sieve beds and the liquid oxygen reservoir. The controller is configured to detect a blockage caused by frozen liquid within the oxygen line based on a liquid oxygen production rate. The heating apparatus is configured to defrost the oxygen line to melt frozen liquid within the oxygen line responsive to the detection of the blockage.

No. of Pages : 23 No. of Claims : 15

(12) PATENT APPLICATION PUBLICATION
(19) INDIA
(22) Date of filing of Application :03/10/2013
(21) Application No.8008/CHENP/2013 A
(43) Publication Date : 07/11/2014

(54) Title of the invention : LED HAVING VERTICAL CONTACTS REDISTRIBUTED FOR FLIP CHIP MOUNTING

(51) International classification :H01L33/38,H01L25/16
(31) Priority Document No :61/452181
(32) Priority Date :14/03/2011
(33) Name of priority country :U.S.A.
(86) International Application No :PCT/IB2012/050915
Filing Date :28/02/2012
(87) International Publication No :WO 2012/123840
(61) Patent of Addition to Application Number :NA
Filing Date :NA
(62) Divisional to Application Number :NA
Filing Date :NA

(71)**Name of Applicant :**
1)KONINKLIJKE PHILIPS N.V.
Address of Applicant :High Tech Campus 5 NL 5656 AE Eindhoven Netherlands
(72)**Name of Inventor :**
1)LEI Jipu
2)CHOY Kwong Hin Henry
3)WEI Yajun
4)SCHIAFFINO Stefano
5)STEIGERWALD Daniel Alexander

(57) Abstract :
A light emitting diode (LED) structure has semiconductor layers including a p type layer an active layer and an n type layer. The p type layer has a bottom surface and the n type layer has a top surface though which light is emitted. A copper layer has a first portion electrically connected to and opposing the bottom surface of the p type layer. A dielectric wall extends through the copper layer to isolate a second portion of the copper layer from the first portion. A metal shunt electrically connects the second portion of the copper layer to the top surface of the n type layer. P metal electrodes electrically connect to the first portion and n metal electrodes electrically connect to the second portion wherein the LED structure forms a flip chip. Other embodiments of the methods and structures are also described.

No. of Pages : 25 No. of Claims : 20

(12) PATENT APPLICATION PUBLICATION
(19) INDIA
(22) Date of filing of Application :28/03/2013
(21) Application No.2436/CHENP/2013 A
(43) Publication Date : 07/11/2014

(54) Title of the invention : INHIBITOR FOR TOBACCO AXILLARY BUD GROWTH AND METHOD FOR INHIBITING TOBACCO AXILLARY BUD GROWTH

(51) International classification :A01G7/06
(31) Priority Document No :PCT/JP2010/064906
(32) Priority Date :01/09/2010
(33) Name of priority country :Japan
(86) International Application No :PCT/JP2011/066934
Filing Date :26/07/2011
(87) International Publication No :WO 2012/029446
(61) Patent of Addition to Application Number :NA
Filing Date :NA
(62) Divisional to Application Number :NA
Filing Date :NA

(71)**Name of Applicant :**
1)SDS Biotech K. K.
Address of Applicant :1 5 Higashi Nihombashi 1 chome Chuo ku Tokyo 1030004 Japan
(72)**Name of Inventor :**
1)TANAKA Motoki
2)TANAKA Keijitsu
3)SHIBUYA Takeshi
4)IKUTA Eiji
5)YOSHINAGA Kotaro
6)YAMAGUCHI Yuki

(57) Abstract :
An inhibitor for tobacco axillary bud growth said inhibitor comprising as the active ingredient one or more kinds of ultra long chain fatty acid synthesis inhibitors such as a chloroacetamide based herbicide fentrazamide cafenstrole or indanofan; an inhibitor for tobacco axillary bud growth said inhibitor comprising the aforesaid ultra long chain fatty acid synthesis inhibitor together with clorthal dimethyl or an aliphatic alcohol having 6 to 20 carbon atoms; and a method for inhibiting tobacco axillary bud growth which comprises applying said inhibitor for tobacco axillary bud growth. This inhibitor for tobacco axillary bud growth shows sustained drug efficacy at a low concentration induces neither chemical injury nor disease and can contribute to the improvement in labor productivity.

No. of Pages : 40 No. of Claims : 8

(12) PATENT APPLICATION PUBLICATION
(19) INDIA
(22) Date of filing of Application :03/10/2013
(21) Application No.8024/CHENP/2013 A
(43) Publication Date : 07/11/2014

(54) Title of the invention : BIPOLAR PUNCH THROUGH SEMICONDUCTOR DEVICE AND METHOD FOR MANUFACTURING SUCH A SEMICONDUCTOR DEVICE

(51) International classification :H01L29/739,H01L21/331
(31) Priority Document No :11161304.8
(32) Priority Date :06/04/2011
(33) Name of priority country :EPO
(86) International Application No :PCT/EP2012/056456
Filing Date :10/04/2012
(87) International Publication No :WO 2012/136848
(61) Patent of Addition to Application Number :NA
Filing Date :NA
(62) Divisional to Application Number :NA
Filing Date :NA

(71)**Name of Applicant :**
1)ABB TECHNOLOGY AG
Address of Applicant :Affolternstrasse 44 CH 8050 Z¼rich Switzerland
(72)**Name of Inventor :**
1)RAHIMO Munaf
2)KOPTA Arnost
3)CLAUSEN Thomas
4)ANDENNA Maxi

(57) Abstract :
A method for manufacturing a bipolar punch through semiconductor device is provided wherein the following steps are performed (a) a wafer (1) having a first and a second side (15 17) is provided wherein on the first side (17) a high doped layer (34) of the first conductivity type having constant high doping concentration is arranged (b) a low doped layer (22) of the first conductivity type is epitaxially grown on the first side (15) (c) afterwards a diffusion step is performed by which a diffused inter space region (32) is created at the inter space of the layers (34 22) (d) afterwards at least one layer of the second conductivity type is created on the first side (15) (e) afterwards the wafer thickness is reduced within the high doped layer (34) is on the second side (17) so that a buffer layer (3) is created which comprises the inter space region (32) and the remaining part of the high doped layer wherein the doping profile of the buffer layer (3) decreases steadily from the doping concentration of the high doped region (36) to the doping concentration of the drift layer (2).

No. of Pages : 22 No. of Claims : 9

(12) PATENT APPLICATION PUBLICATION
(19) INDIA
(22) Date of filing of Application :03/10/2013
(21) Application No.8027/CHENP/2013 A
(43) Publication Date : 07/11/2014

(54) Title of the invention : BITUMINOUS COMPOSITION

(51) International classification :C08L95/00,C08L23/08
(31) Priority Document No :61/472929
(32) Priority Date :07/04/2011
(33) Name of priority country :U.S.A.
(86) International Application No :PCT/US2012/032324
Filing Date :05/04/2012
(87) International Publication No :WO 2012/138860
(61) Patent of Addition to Application Number :NA
Filing Date :NA
(62) Divisional to Application Number :NA
Filing Date :NA

(71)**Name of Applicant :**
1)SHELL OIL COMPANY
Address of Applicant :One Shell Plaza P.O. Box 2463 Houston Texas 77252 2463 U.S.A.
2)SHELL INTERNATIONALE RESEARCH MAATSCHAPPIJ B.V.
(72)**Name of Inventor :**
1)STRICKLAND David
2)CHUGHTAI Majid Jamshed
3)MAY Richard Walter

(57) Abstract :
The invention provides a bituminous composition comprising 20 to 80wt% bitumen 0.1 to 7wt% of a copolymer formed from monomers including ethylene and glycidyl methacrylate or glycidyl acrylate and 20 to 60wt% sulphur all weight percentages based on the weight of the bituminous composition. It further provides a process for making this composition and asphalt compositions comprising such bituminous composition.

No. of Pages : 22 No. of Claims : 13

(12) PATENT APPLICATION PUBLICATION
(19) INDIA
(22) Date of filing of Application :04/10/2013
(21) Application No.8029/CHENP/2013 A
(43) Publication Date : 07/11/2014

(54) Title of the invention : BRIDGING THERMAL BLOCK SYSTEM AND METHOD

(51) International classification :E04D13/16,E04D3/35,E04D3/36
(31) Priority Document No :61/472397
(32) Priority Date :06/04/2011
(33) Name of priority country :U.S.A.
(86) International Application No :PCT/US2011/060814
Filing Date :15/11/2011
(87) International Publication No :WO 2012/138385
(61) Patent of Addition to Application Number :NA
Filing Date :NA
(62) Divisional to Application Number :NA
Filing Date :NA

(71)**Name of Applicant :**
1)BLUESCOPE BUILDINGS NORTH AMERICA INC.
Address of Applicant :1540 Genessee Street Kansas City MO 64102 U.S.A.
(72)**Name of Inventor :**
1)MCCLURE Richard R.

(57) Abstract :
A system and method for insulating a metal roof include a blanket of insulation laid over at least one purlin. A series of thermal blocks are fastened above the purlin over the blanket of insulation. Each thermal block in the series of thermal blocks has legs that pin the blanket of insulation to a top of each purlin. Gaps are defined between the legs the gaps enabling regions between the legs wherein the blanket of insulation is only partially compressed between the purlin and an underside of each thermal block. Each thermal block can include a first end a second end and a first leg between the first and second ends. The first end includes slots for receiving clip legs of a first roof clip. The second end includes an abutment surface and a landing surface for receiving a next thermal block in a series of thermal blocks.

No. of Pages : 18 No. of Claims : 8

(12) PATENT APPLICATION PUBLICATION
(19) INDIA
(22) Date of filing of Application :05/02/2013
(21) Application No.497/CHE/2013 A
(43) Publication Date : 07/11/2014

(54) Title of the invention : STEERING EFFORT REDUCTION SYSTEM

(51) International classification :B62D
(31) Priority Document No :NA
(32) Priority Date :NA
(33) Name of priority country :NA
(86) International Application No :NA
Filing Date :NA
(87) International Publication No : NA
(61) Patent of Addition to Application Number :NA
Filing Date :NA
(62) Divisional to Application Number :NA
Filing Date :NA

(71)**Name of Applicant :**
1)TVS MOTOR COMPANY LIMITED
Address of Applicant :JAYALAKSHMI ESTATES NO.29 (OLD NO.8) HADDOWS ROAD, CHENNAI 600 006. Tamil Nadu India
(72)**Name of Inventor :**
1)VARUNPRABHU RAMASWAMY
2)HIMADRI BHUSAN DAS
3)DR. SUJATHA CHANDRAMOHAN
4)DR. RAGHU V. PRAKASH
5)MOSALI NAGARJUN REDDY
6)DR. SAMRAJ JABEZ DHINAGAR

(57) Abstract :
A steering effort reduction system is disclosed for a three wheeled vehicle which assists the steering effort provided by the vehicle driver and reduces drive fatigue. The system uses a DC motor whose output and rotational direction is dependent upon the steering angle and steering rate.

No. of Pages : 21 No. of Claims : 5

(12) PATENT APPLICATION PUBLICATION
(19) INDIA
(22) Date of filing of Application :04/10/2013
(21) Application No.8030/CHENP/2013 A
(43) Publication Date : 07/11/2014

(54) Title of the invention : MACROPOROUS FILTRATION MEMBRANE

(51) International classification :B01D69/02,B01D71/68,B01D67/00
(31) Priority Document No :11162177.7
(32) Priority Date :13/04/2011
(33) Name of priority country:EPO
(86) International Application No :PCT/EP2012/055573
Filing Date :29/03/2012
(87) International Publication No :WO 2012/139896
(61) Patent of Addition to Application Number :NA
Filing Date :NA
(62) Divisional to Application Number :NA
Filing Date :NA

(71)**Name of Applicant :**
1)MEMBRANA GMBH
Address of Applicant :Oehder Strasse 28 42289 Wuppertal Germany
(72)**Name of Inventor :**
1)SCHNEIDER Frank
2)CZERNIK Martin
3)STRIPP Walter
4)TATSCH Ramona

(57) Abstract :
Hydrophilic sheet like membrane based on a hydrophobic first polymer selected from the group consisting of aromatic sulphone polymers and also a hydrophilic second polymer where the membrane has a thickness in the range from 30 to 200 µm a first surface and a second surface and a supporting layer having a three dimensional sponge like network structure where the supporting layer has a first covering layer on its side facing the first surface and a second covering layer on its side facing the second surface which are integral with the supporting layer and the first surface and the second surface have approximately oval or circular openings which pass through the first or second covering layer and communicate with the support layer where the average diameter of the openings in the surfaces differ by a factor of less than 2 where the three dimensional network structure of the support layer is made up of thick branches and a pore system having contiguous pores the major part of the branches has a diameter of at least 0.5 µm at their thinnest point the pores in the support layer are larger than the openings in the surfaces.

No. of Pages : 47 No. of Claims : 16

(12) PATENT APPLICATION PUBLICATION
(19) INDIA
(22) Date of filing of Application :04/10/2013
(21) Application No.8031/CHENP/2013 A
(43) Publication Date : 07/11/2014

(54) Title of the invention : METHOD OF MAKING A HEAT EXCHANGER WITH AN ENHANCE MATERIAL SYSTEM

(51) International classification :F28F19/00,F28F19/06
(31) Priority Document No :61/478709
(32) Priority Date :25/04/2011
(33) Name of priority country :U.S.A.
(86) International Application No :PCT/US2012/034951
Filing Date :25/04/2012
(87) International Publication No :WO 2012/148988
(61) Patent of Addition to Application Number :NA
Filing Date :NA
(62) Divisional to Application Number :NA
Filing Date :NA

(71)**Name of Applicant :**
1)DELPHI TECHNOLOGIES INC.
Address of Applicant :P.O. Box 5052 Legal Staff M/C: 483 400 402 Troy MI 48007 5052 U.S.A.
(72)**Name of Inventor :**
1)WINTERSTEEN Douglas C.
2)MITTLEFEHLDT Kurt R.

(57) Abstract :
The disclosure relates to a method of manufacturing a heat exchanger assembly with an enhanced material system. The enhanced material system includes refrigerant tubes extruded from a high purity AA3000 series alloy billet having about 1% by weight (wt%) Mn and pre braze treated with either a reactive zinc flux or a mixture of elemental zinc powder and a controlled atmosphere brazed (CAB) flux applied by glass plasma or organic binder such as an organic binder fins formed from modified a AA3003 alloy having less than 0.05 wt% Cu and from 1.2 to 1.8% wt% Zn and header manifolds manufactured from a AA3000 series alloy with a AA4000 series cladding having 0.9 to 1.1 wt% Zn. The enhanced material system may also include a post braze coating and a subsequent organic polymer resin topcoat.

No. of Pages : 22 No. of Claims : 17

(12) PATENT APPLICATION PUBLICATION
(19) INDIA
(22) Date of filing of Application :04/10/2013
(21) Application No.8032/CHENP/2013 A
(43) Publication Date : 07/11/2014

(54) Title of the invention : INSULATING MULTIPLE GLAZING INCLUDING TWO LOW EMISSIVITY STACKS

(51) International classification :C03C17/36,C03C17/34,E06B3/67
(31) Priority Document No :1152516
(32) Priority Date :25/03/2011
(33) Name of priority country :France
(86) International Application No :PCT/FR2012/050613
Filing Date :23/03/2012
(87) International Publication No :WO 2012/131243
(61) Patent of Addition to Application Number :NA
Filing Date :NA
(62) Divisional to Application Number :NA
Filing Date :NA

(71)**Name of Applicant :**
1)SAINT GOBAIN GLASS FRANCE
Address of Applicant :18 avenue dAlsace F 92400 Courbevoie France
(72)**Name of Inventor :**
1)GERARDIN Hadia
2)REYMOND Vincent

(57) Abstract :
The invention relates to a multiple glazing having thermal insulation properties and being produced by combining at least two glass substrates separated by gas spaces including: a first stack of layers having low emissivity properties and including at least one metal functional layer; and a second stack of layers having low emissivity properties and including at least one functional layer consisting of a transparent conductive oxide and a layer essentially consisting of silicon oxide and arranged on top of the functional layer consisting of the transparent conductive oxide.

No. of Pages : 24 No. of Claims : 16

(12) PATENT APPLICATION PUBLICATION
(19) INDIA
(22) Date of filing of Application :04/10/2013
(21) Application No.8033/CHENP/2013 A
(43) Publication Date : 07/11/2014

(54) Title of the invention : METHOD FOR DETECTING AND QUANTIFYING A TARGET MOLECULE IN A SAMPLE

(51) International classification :G01N33/68
(31) Priority Document No :1152334
(32) Priority Date :21/03/2011
(33) Name of priority country :France
(86) International Application No :PCT/EP2012/054768
Filing Date :19/03/2012
(87) International Publication No :WO 2012/126873
(61) Patent of Addition to Application Number :NA
Filing Date :NA
(62) Divisional to Application Number :NA
Filing Date :NA

(71)**Name of Applicant :**
1)IMABIOTECH
Address of Applicant :Cit scientifique Btiment SN3 F 59655 Villeneuve Dascq France
(72)**Name of Inventor :**
1)STAUBER Jonathan
2)PAMELARD Fabien
3)BONNEL David
4)HAMM Grgory

(57) Abstract :
The invention relates to a method for identifying and quantifying by mass spectrometry at least one target molecule in a sample comprising the following steps: a) depositing the sample to be analyzed on a support; b) analyzing the sample by mass spectrometry so as to obtain the mass spectrum of the target molecule in said sample; c) weighting a signal associated with the mass spectrum of the target molecule in said sample by a extinction coefficient (TEC) specific to the target molecule and to the sample; and optionally d) using the weighted signal of the target molecule to determine the quantity of target molecule in the sample.

No. of Pages : 36 No. of Claims : 20

(12) PATENT APPLICATION PUBLICATION
(19) INDIA
(22) Date of filing of Application :28/02/2013
(21) Application No.1634/CHENP/2013 A
(43) Publication Date : 07/11/2014

(54) Title of the invention : CRIMP TERMINAL

(51) International classification :H01R4/18
(31) Priority Document No :2010175170
(32) Priority Date :04/08/2010
(33) Name of priority country :Japan
(86) International Application No :PCT/JP2011/063158
Filing Date :08/06/2011
(87) International Publication No :WO 2012/017736
(61) Patent of Addition to Application Number :NA
Filing Date :NA
(62) Divisional to Application Number :NA
Filing Date :NA

(71)**Name of Applicant :**
1)YAZAKI CORPORATION
Address of Applicant :4 28 Mita 1 chome Minato ku Tokyo 1080073 Japan
(72)**Name of Inventor :**
1)ONUMA Masanori
2)TAKEMURA Kousuke

(57) Abstract :
Disclosed is a crimp terminal (10) that is provided with a conductive crimp part (12) formed in a cross sectional U shape by a bottom plate (13) and a pair of conductive swage pieces (14 14). The pair of conductive swage pieces (14 14) are provided extending from both sides of the bottom plate (13) and are swaged so as to encase a conductor (Wa) of a wire (W) disposed on an inner surface (13a) of the bottom plate (13). The conductive crimp part (12) is crimped and thereby connected to the conductor (Wa) and has serrations (16) comprising cylindrical concave parts having the same shape. The serrations (16) are disposed at lattice points of lattices (21 22 23) that cross the conductor (Wa) at an oblique angle with respect to the longitudinal direction of the conductor (Wa) that is assumed to be on inner surfaces (13a 14a).

No. of Pages : 33 No. of Claims : 6

(12) PATENT APPLICATION PUBLICATION
(19) INDIA
(22) Date of filing of Application :04/03/2013
(21) Application No.1751/CHENP/2013 A
(43) Publication Date : 07/11/2014

(54) Title of the invention : MODULAR DOOR DRIVE

(51) International classification :E05F15/14
(31) Priority Document No :202010008648.5
(32) Priority Date :28/09/2010
(33) Name of priority country :Germany
(86) International Application No :PCT/EP2011/066525
Filing Date :22/09/2011
(87) International Publication No :WO 2012/041762
(61) Patent of Addition to Application Number :NA
Filing Date :NA
(62) Divisional to Application Number :NA
Filing Date :NA

(71)**Name of Applicant :**
1)GEBR. BODE GMBH & CO. KG
Address of Applicant :Ochshuser Str. 14 34123 Kassel Germany
(72)**Name of Inventor :**
1)LINNENKOHL Lars
2)PELLEGRINI Andreas

(57) Abstract :
The invention relates to a drive device for a sliding door or a sliding plug door of a passenger transportation vehicle comprising at least one at least linearly movable runner (7) in order to move a door leaf fastened thereto a motor (3) fastened to the runner (7) or to the passenger transportation vehicle and a first gearbox (2 5 6) between the motor (3) and runner (7) in order to effect at least the longitudinal displacement of the runner characterized in that at least two fastening options (13 14) which differ in the arrangement ratios of the first gearbox and motor are provided between the motor and the first gearbox.

No. of Pages : 18 No. of Claims : 12

(12) PATENT APPLICATION PUBLICATION
(19) INDIA
(22) Date of filing of Application :21/03/2013
(21) Application No.2268/CHENP/2013 A
(43) Publication Date : 07/11/2014

(54) Title of the invention : MINIATURE SAFETY SWITCH

(51) International classification :H01H37/54,H01H71/16
(31) Priority Document No :20 2010 013 526.5
(32) Priority Date :24/09/2010
(33) Name of priority country :Germany
(86) International Application No :PCT/EP2011/001809
Filing Date :12/04/2011
(87) International Publication No :WO 2012/037991
(61) Patent of Addition to Application Number :NA
Filing Date :NA
(62) Divisional to Application Number :NA
Filing Date :NA

(71)**Name of Applicant :**
1)ELLENBERGER & POENSGEN GMBH
Address of Applicant :Industriestrasse 2 8 90518 Altdorf Germany
(72)**Name of Inventor :**
1)ULLERMANN Wolfgang
2)KRAUS Helmut

(57) Abstract :
The invention relates to a miniature safety switch (1) for use in motor vehicle electronics comprising a housing base (3) from which a fixed contact arm (5) and a bimetallic contact arm (6) which has a moving contact (9) and a bimetallic snap disk (7) attached thereto are led out wherein a PTC resistor (29) is brought into direct contact with the bimetallic snap disk (7) by means of a compression spring (28) and is electrically integrated in such a way that as a result of the heat generated by the PTC resistor the bimetallic snap disk (7) remains in the open position thereof in the event of triggering.

No. of Pages : 33 No. of Claims : 10

(12) PATENT APPLICATION PUBLICATION
(19) INDIA
(22) Date of filing of Application :04/10/2013
(21) Application No.8068/CHENP/2013 A
(43) Publication Date : 07/11/2014

(54) Title of the invention : PRIORITY DIMENSIONAL DATA CONVERSION PATH REPORTING

(51) International classification	:G06Q50/00,G06Q10/00,G06Q30/00
(31) Priority Document No	:13/084413
(32) Priority Date	:11/04/2011
(33) Name of priority country	:U.S.A.
(86) International Application No	:PCT/US2011/054000
Filing Date	:29/09/2011
(87) International Publication No	:WO 2012/141732
(61) Patent of Addition to Application Number	:NA
Filing Date	:NA
(62) Divisional to Application Number	:NA
Filing Date	:NA

(71)**Name of Applicant :**
1)GOOGLE INC.
Address of Applicant :1600 Amphitheatre Parkway Mountain View CA 94043 U.S.A.
(72)**Name of Inventor :**
1)HSIAO Sissie Ling Ie
2)CHOC Theodore Nicholas
3)TANGNEY Cameron Michael
4)SECKAR Nicholas

(57) Abstract :
Methods systems and apparatuses including computer programs encoded on a computer storage medium for providing data related to conversion paths. In one aspect a plurality of conversion paths are received. Each conversion path includes one or more user interactions that include a plurality of dimensional data. A priority sorted list of dimensions is received and dimensional data is selected from each user interaction based on the sort list of dimensions. Each conversion path is converted into a dimensional path and each dimensional path includes dimensional elements that corresponds to user interactions of the conversion path. Each dimensional element comprises the selected dimensional data from the corresponding user interaction. The plurality of dimensional paths are aggregated together based upon the number of dimensional elements within each dimensional path and the dimensional data of the dimensional elements. Reports can be generated using the aggregated dimensional data.

No. of Pages : 48 No. of Claims : 20

(12) PATENT APPLICATION PUBLICATION
(19) INDIA
(22) Date of filing of Application :20/03/2013
(21) Application No.2216/CHENP/2013 A
(43) Publication Date : 07/11/2014

(54) Title of the invention : MULTILAYER PLASTICS ITEMS WITH BARRIER PROPERTIES AND PROCESS FOR PRODUCING THE SAME

(51) International classification :B29C49/22,B32B27/08,B32B27/32
(31) Priority Document No :10 2010 046 378.7
(32) Priority Date :24/09/2010
(33) Name of priority country :Germany
(86) International Application No :PCT/EP2011/004298
Filing Date :26/08/2011
(87) International Publication No :WO 2012/038018
(61) Patent of Addition to Application Number :NA
Filing Date :NA
(62) Divisional to Application Number :NA
Filing Date :NA

(71)**Name of Applicant :**
1)KAUTEX TEXTRON GMBH & CO. KG
Address of Applicant :Kautexstr. 52 53229 Bonn Germany
(72)**Name of Inventor :**
1)EULITZ Dirk
2)HELMIG Raimund
3)LEHMANN Harald

(57) Abstract :
The present invention relates to multilayer plastics items encompassing at least two layers based on non polar polyolefins and located between the said two layers and in direct contact with the same a layer with barrier properties with respect to hydrocarbons and also to a process for producing the same.

No. of Pages : 18 No. of Claims : 13

(12) PATENT APPLICATION PUBLICATION
(19) INDIA
(22) Date of filing of Application :20/03/2013
(21) Application No.2217/CHENP/2013 A
(43) Publication Date : 07/11/2014

(54) Title of the invention : AZO COMPOUND AND PIGMENT DISPERSANT PIGMENT COMPOSITION PIGMENT DISPERSION AND TONER INCLUDING THE AZO COMPOUND

(51) International classification :C09B43/12,C09B29/33,C09B33/153
(31) Priority Document No :2010190325
(32) Priority Date :27/08/2010
(33) Name of priority country :Japan
(86) International Application No :PCT/JP2011/069365
Filing Date :23/08/2011
(87) International Publication No :WO 2012/026607
(61) Patent of Addition to Application Number :NA
Filing Date :NA
(62) Divisional to Application Number :NA
Filing Date :NA

(71)**Name of Applicant :**
1)CANON KABUSHIKI KAISHA
Address of Applicant :30 2 Shimomaruko 3 chome Ohta ku Tokyo 1468501 Japan
(72)**Name of Inventor :**
1)KAWAMURA Masashi
2)HASEGAWA Yuki
3)TANAKA Masatake
4)TOYODA Takayuki
5)INOUE Kei
6)MURAI Yasuaki
7)HIROSE Masashi
8)MIYAZAKI Takeshi

(57) Abstract :
There is provided an azo compound for improvement in the dispersibility of an azo pigment into a water insoluble solvent. The azo compound is represented by the following general formula (1): Wherein R represents alkyl or phenyl; Rto R represent hydrogen atom or polymer represented by the general formula (2); R to Rrepresent hydrogen atom COOR or CONRR; R to R represent hydrogen atom or alkyl: Wherein R represents hydrogen atom or alkyl.

No. of Pages : 76 No. of Claims : 14

(12) PATENT APPLICATION PUBLICATION
(19) INDIA
(22) Date of filing of Application :11/09/2013
(21) Application No.7338/CHENP/2013 A
(43) Publication Date : 07/11/2014

(54) Title of the invention : HYBRID VEHICLE CLUTCH CONTROL DEVICE

(51) International classification :B60W10/02,B60K6/48,B60K6/547
(31) Priority Document No :2011066161
(32) Priority Date :24/03/2011
(33) Name of priority country :Japan
(86) International Application No :PCT/JP2012/056076
Filing Date :09/03/2012
(87) International Publication No :WO 2012/128065
(61) Patent of Addition to Application Number :NA
Filing Date :NA
(62) Divisional to Application Number :NA
Filing Date :NA

(71)**Name of Applicant :**
1)AISIN SEIKI KABUSHIKI KAISHA
Address of Applicant :1 Asahi machi 2 chome Kariya shi Aichi 4488650 Japan
(72)**Name of Inventor :**
1)TERAKAWA Tomomitsu
2)HOSOI Yasuhiro
3)KITAMURA Yuichiro
4)SUZUKI Yoshihide

(57) Abstract :
Provided is a hybrid vehicle clutch control device that ensures precise clutch torque control by temporarily engaging a clutch device when the clutch has been kept disengaged for a prescribed duration. Said clutch control device is provided with an engine an automatic transmission and a clutch device and has a clutch actuator a slave cylinder and a clutch engagement holding control unit. Said clutch actuator contains: an output rod that is stroked by an actuator; and a master cylinder that is actuated by the stroke of the output rod and generates hydraulic pressure by closing an idle port that leads to a reservoir. The slave cylinder which controls the engagement and disengagement of the clutch device is connected to the master cylinder via a connecting channel and is actuated by the hydraulic pressure generated by the master cylinder. If the clutch device (14) remains disengaged for a prescribed duration while running on motor power the clutch engagement holding control unit actuates the master cylinder in the direction whereby the idle port is opened and temporarily holds the clutch device in the engaged state.

No. of Pages : 24 No. of Claims : 7

(12) PATENT APPLICATION PUBLICATION
(19) INDIA
(22) Date of filing of Application :08/10/2013

(21) Application No.8142/CHENP/2013 A
(43) Publication Date : 07/11/2014

(54) Title of the invention : COMMUNICATION BETWEEN A CLIENT DEVICE AND A WIRELESS PERIPHERAL UNIT

(51) International classification	:H04W4/00,H04L29/06,H04W92/02
(31) Priority Document No	:11305307.8
(32) Priority Date	:18/03/2011
(33) Name of priority country	:EPO
(86) International Application No	:PCT/IB2012/051234
Filing Date	:15/03/2012
(87) International Publication No	:WO 2012/127372
(61) Patent of Addition to Application Number	:NA
Filing Date	:NA
(62) Divisional to Application Number	:NA
Filing Date	:NA

(71)**Name of Applicant :**
1)KONINKLIJKE PHILIPS N.V.
Address of Applicant :High Tech Campus 5 NL 5656 AE Eindhoven Netherlands
(72)**Name of Inventor :**
1)VAN DE LAAR Franciscus Antonius Maria
2)BERNSEN Johannes Arnoldus Cornelis
3)HOLTMAN Koen Johanna Guillaume

(57) Abstract :
A communication between a client device (2) and a peripheral unit (14) uses tunnelling over another communication mode. The other communication mode is implemented between the client device and a host device (1) in addition to a communication mode implemented between the host device and the peripheral unit. The host device and the client device are each provided with additional communication modules (3 6) at application level and transport level. Security issues against intrusions into the communication may be implemented by the modules added to the host or client unit.

No. of Pages : 17 No. of Claims : 15

(12) PATENT APPLICATION PUBLICATION
(19) INDIA
(22) Date of filing of Application :08/10/2013
(21) Application No.8144/CHENP/2013 A
(43) Publication Date : 07/11/2014

(54) Title of the invention : METHOD FOR PROVIDING A REFLECTIVE COATING TO A SUBSTRATE FOR A LIGHT EMITTING DEVICE

(51) International classification :F21K99/00,H01L33/60,H05K1/02
(31) Priority Document No :11158839.8
(32) Priority Date :18/03/2011
(33) Name of priority country :EPO
(86) International Application No :PCT/IB2012/051112
Filing Date :09/03/2012
(87) International Publication No :WO 2012/127349
(61) Patent of Addition to Application Number :NA
Filing Date :NA
(62) Divisional to Application Number :NA
Filing Date :NA

(71)**Name of Applicant :**
1)KONINKLIJKE PHILIPS N.V.
Address of Applicant :High Tech Campus 5 NL 5656 AE Eindhoven Netherlands
(72)**Name of Inventor :**
1)JAGT Hendrik Johannes Boudewijn
2)KLEIJNEN Christian

(57) Abstract :
The present invention relates to a method for providing a reflective coating (114) to a substrate (104) for a light emitting device (112) comprising the steps of: providing (201) a substrate (104) having a first surface portion (116) with a first surface material and a second surface portion (106 108) with a second surface material different from the first surface material; applying (202) a reflective compound (401) configured to attach to said first surface material to form a bond with the substrate (104) in the first surface portion (116) that is stronger than a bond between the reflective compound (401) and the substrate (104) in the second surface portion (106 108); curing (203) said reflective compound (401) to form a reflective coating (114) having said bond between the reflective coating (114) and the substrate (104) in the first surface portion (116); and subjecting said substrate (104) to a mechanical treatment with such an intensity as to remove (205) said reflective coating (114) from said second surface portion (106 108) while said reflective coating (114) remains on said first surface portion (116).

No. of Pages : 20 No. of Claims : 15

(12) PATENT APPLICATION PUBLICATION
(19) INDIA
(22) Date of filing of Application :07/01/2013
(21) Application No.107/CHE/2013 A
(43) Publication Date : 07/11/2014

(54) Title of the invention : A METHOD FOR DISABLING AUTOMATIC ACTIVATION OF START-STOP SYSTEM

(51) International classification :h04l
(31) Priority Document No :NA
(32) Priority Date :NA
(33) Name of priority country :NA
(86) International Application No :NA
Filing Date :NA
(87) International Publication No : NA
(61) Patent of Addition to Application Number :NA
Filing Date :NA
(62) Divisional to Application Number :NA
Filing Date :NA

(71)**Name of Applicant :**
1)BOSCH LIMITED
Address of Applicant :POST BOX NO 3000, HOSUR ROAD ADUGODI, BANGALORE - 560 030 Karnataka India
2)ROBERT BOSCH GMBH
(72)**Name of Inventor :**
1)PRADEEP R
2)PRAMOD R

(57) Abstract :
The present invention discloses a method to disable activation of a start-stop system of a vehicle. According to the proposed method an indication is given to a driver of a state of the vehicle which satisfies the criteria for activation of the start-stop system. In case the driver wants to disable the activation of the start-stop system, instead of using a hardware switch, the driver needs to open and close the throttle of the vehicle in a predefined pattern. On detecting the variation in the throttle signal within a predefined time period the activation of the start-stop system is disabled.

No. of Pages : 9 No. of Claims : 9

(12) PATENT APPLICATION PUBLICATION
(19) INDIA
(22) Date of filing of Application :28/02/2013
(21) Application No.1650/CHENP/2013 A
(43) Publication Date : 07/11/2014

(54) Title of the invention : NOXIOUS ARTHROPOD CONTROL COMPOSITION AND NOXIOUS ARTHROPOD CONTROL METHOD

(51) International classification	:A01N43/38,A01N37/24,A01N43/16
(31) Priority Document No	:2010175201
(32) Priority Date	:04/08/2010
(33) Name of priority country	:Japan
(86) International Application No	:PCT/JP2011/067817
Filing Date	:28/07/2011
(87) International Publication No	:WO 2012/018060
(61) Patent of Addition to Application Number	:NA
Filing Date	:NA
(62) Divisional to Application Number	:NA
Filing Date	:NA

(71)**Name of Applicant :**
1)SUMITOMO CHEMICAL COMPANY LIMITED
Address of Applicant :27 1 Shinkawa 2 chome Chuo ku Tokyo 1048260 Japan
(72)**Name of Inventor :**
1)IWATA Atsushi
2)SAKAMOTOEmiko

(57) Abstract :
A noxious arthropod control composition comprising spirotetramat and at least one sheath blight disease control compound selected from the group (A). Group (A): consisting of flutolanil pencycuron furametpyr and validamycin A.

No. of Pages : 21 No. of Claims : 8

(12) PATENT APPLICATION PUBLICATION
(19) INDIA
(22) Date of filing of Application :15/03/2013
(21) Application No.2122/CHENP/2013 A
(43) Publication Date : 07/11/2014

(54) Title of the invention : GASEOUS FUELLED STOICHIOMETRIC COMPRESSION IGNITION INTERNAL COMBUSTION ENGINE

(51) International classification :F02D19/10,F02B43/04,F02M21/02
(31) Priority Document No :61/374257
(32) Priority Date :16/08/2010
(33) Name of priority country :U.S.A.
(86) International Application No :PCT/CA2011/050495
Filing Date :12/08/2011
(87) International Publication No :WO 2012/021990
(61) Patent of Addition to Application Number :NA
Filing Date :NA
(62) Divisional to Application Number :NA
Filing Date :NA

(71)**Name of Applicant :**
1)WESTPORT POWER INC.
Address of Applicant :101 1750 West 75th Ave. Vancouver British Columbia V6P 6G2 Canada
(72)**Name of Inventor :**
1)MUNSHI Sandeep
2)WELCH Alan B.
3)MCTAGGART COWAN Gordon P.

(57) Abstract :
In a gaseous fuelled stoichiometric compression ignition internal combustion engine a pilot fuel is injected directly into the combustion chamber to help initiate a multi point ignition. The engine provides performance improvements approaching those of high pressure direct injection engines but with less complexity because the gaseous fuel is introduced into the intake air subsystem at relatively low pressure and as a result of the stoichiometric combustion the low oxygen content in the combustion products exiting the combustion chamber allows the use of a three way catalyst instead of other after treatment arrangements normally associated with conventional compression ignition engines that require the addition of a reductant.

No. of Pages : 47 No. of Claims : 35

(12) PATENT APPLICATION PUBLICATION
(19) INDIA
(22) Date of filing of Application :08/10/2013
(21) Application No.8132/CHENP/2013 A
(43) Publication Date : 07/11/2014

(54) Title of the invention : DISPENSING DEVICE

(51) International classification :D06F39/02
(31) Priority Document No :61/476011
(32) Priority Date :15/04/2011
(33) Name of priority country :U.S.A.
(86) International Application No :PCT/GB2012/050784
Filing Date :10/04/2012
(87) International Publication No :WO 2012/140416
(61) Patent of Addition to Application Number :NA
Filing Date :NA
(62) Divisional to Application Number :NA
Filing Date :NA

(71)**Name of Applicant :**
1)RECKITT BENCKISER N.V.
Address of Applicant :Siriusdreef 14 NL 2132 WT Hoofddorp Netherlands
2)RECKITT & COLMAN (OVERSEAS) LIMITED
(72)**Name of Inventor :**
1)HARTL Josh
2)JOACHIM Robert
3)MADSEN Steve
4)TURCHI Mario Alexander

(57) Abstract :
A container adapted to contain and dispense a product. Said container comprises a hollow body a filling opening a dispensing opening a valve and a flexible and resilient support means for said valve. Said flexible and resilient support means urges said valve against said dispensing opening achieving a leak tight engagement between said valve and said dispensing opening. Said flexible and resilient support means can be resiliency deformed by an external force acting on said valve whereby said leak tight engagement between said valve and said dispensing opening is disengaged allowing said contained product to be spread by said valve Said flexible and resilient support means comprises a housing which fits the container and defines said dispensing opening at one extremity. Said housing comprising a resiliency deformable means urging said valve against said dispensing opening to achieve said leak tight engagement. When the leak tight engagement between said valve and said dispensing opening is disengaged a fluid flow pathway is created which has a cross section of greater than 10% of the width of the dispensing opening.

No. of Pages : 26 No. of Claims : 12

(12) PATENT APPLICATION PUBLICATION
(19) INDIA
(22) Date of filing of Application :08/10/2013
(21) Application No.8139/CHENP/2013 A
(43) Publication Date : 07/11/2014

(54) Title of the invention : SYSTEM FOR CONNECTING A PORTABLE DEVICE APPARATUS COMPRISING SAID SYSTEM

(51) International classification :G06F1/16
(31) Priority Document No :PCT/CN2011/000438
(32) Priority Date :18/03/2011
(33) Name of priority country :China
(86) International Application No :PCT/IB2012/051118
Filing Date :09/03/2012
(87) International Publication No :WO 2012/127350
(61) Patent of Addition to Application Number :NA
Filing Date :NA
(62) Divisional to Application Number :NA
Filing Date :NA

(71)**Name of Applicant :**
1)KONINKLIJKE PHILIPS N.V.
Address of Applicant :High Tech Campus 5 NL 5656 AE Eindhoven Netherlands
(72)**Name of Inventor :**
1)WONG Kwok Yeung

(57) Abstract :
The invention relates to a system (1) for connecting a portable device. The system comprises: a base portion (3)forming a planar area (4); a cradle (5) comprising a first portion (6) having a connector (7) extending upwards for connecting the portable device and a second portion (8) for supporting the portable device when the portable device is connected in the connector (7). The cradle (5) is mounted on the base portion (3) in a rotatable way so as to take a first cradle position in which the first portion (6) extends in the same plan as the planar area (4) and to take a second cradle position in which the second portion (8) extends in the same plan as the planar area (4). When the cradle is in the first cradle position the first portion of the cradle is in the same plan as the planar area formed by the base portion which allows the connector to extend upwards this unique plan and to connect with any portable devices independently of their width because no recess exits. Moreover when the cradle is in the second cradle position the second portion advantageously acts as a cover which allows to hide the connector.

No. of Pages : 19 No. of Claims : 7

(12) PATENT APPLICATION PUBLICATION
(19) INDIA
(22) Date of filing of Application :27/03/2013
(21) Application No.2407/CHENP/2013 A
(43) Publication Date : 07/11/2014

(54) Title of the invention : PMI FOAMS WITH IMPROVED MECHANICAL PROPERTIES IN PARTICULAR WITH INCREASED ELONGATION AT TEAR

(51) International classification :C08J9/04,B32B5/18
(31) Priority Document No :10 2010 040 010.6
(32) Priority Date :31/08/2010
(33) Name of priority country :Germany
(86) International Application No :PCT/EP2011/060888
Filing Date :29/06/2011
(87) International Publication No :WO 2012/028353
(61) Patent of Addition to Application Number :NA
Filing Date :NA
(62) Divisional to Application Number :NA
Filing Date :NA

(71)**Name of Applicant :**
1)EVONIK R–HM GMBH
Address of Applicant :Kirschenallee 64293 Darmstadt Germany
(72)**Name of Inventor :**
1)BERNHARD Kay
2)HEMPLER Mathias
3)GEYER Werner
4)BARTHEL Thomas
5)JAHN Torsten

(57) Abstract :
The invention relates to compounds for producing polymethacrylimide foam materials (PMI foams) with particularly good mechanical properties in particular with a particularly advantageous elongation at tear. The invention further relates to methods for producing processing and using said foam materials. In particular the invention relates to novel materials the propensity of which to form tears is clearly reduced in comparison to the prior art. This is tantamount to an elongation at tear that is higher in comparison to the prior art.

No. of Pages : 21 No. of Claims : 9

(12) PATENT APPLICATION PUBLICATION
(19) INDIA
(22) Date of filing of Application :27/03/2013
(21) Application No.2408/CHENP/2013 A
(43) Publication Date : 07/11/2014

(54) Title of the invention : INVERTER WITH AN AC INTERFACE FOR THE CONNECTION OF AC MODULES

(51) International classification :H02M7/493
(31) Priority Document No :10 2010 036 033.3
(32) Priority Date :31/08/2010
(33) Name of priority country :Germany
(86) International Application No :PCT/EP2011/064840
Filing Date :29/08/2011
(87) International Publication No :WO 2012/028589
(61) Patent of Addition to Application Number :NA
Filing Date :NA
(62) Divisional to Application Number :NA
Filing Date :NA

(71)**Name of Applicant :**
1)SMA SOLAR TECHNOLOGY AG
Address of Applicant :Sonnenallee 1 34266 Niestetal Germany
(72)**Name of Inventor :**
1)BETTENWORT Gerd
2)LASCHINSKI Joachim

(57) Abstract :
An inverter (20) for feeding a grid compatible AC voltage into a grid (40) is described wherein the inverter comprises an inverter bridge (21) for converting a DC voltage to a first AC voltage and a grid interface (30) between the inverter bridge (21) and the grid (40) for converting the first AC voltage to the grid compatible AC voltage for feeding into the grid (40). An AC interface (60) via which an AC module (50) for feeding into the grid (40) can be connected is arranged between the inverter bridge (21) and the grid interface (30).

No. of Pages : 30 No. of Claims : 17

(12) PATENT APPLICATION PUBLICATION
(19) INDIA
(22) Date of filing of Application :03/10/2013
(21) Application No.7986/CHENP/2013 A
(43) Publication Date : 07/11/2014

(54) Title of the invention : SYSTEMS AND METHODS FOR PREDICTING FLUID DYNAMICS IN A DATA CENTER

(51) International classification :G06F17/50,G06F1/20
(31) Priority Document No :61/467920
(32) Priority Date :25/03/2011
(33) Name of priority country :U.S.A.
(86) International Application No :PCT/US2012/030373
Filing Date :23/03/2012
(87) International Publication No :WO 2012/135038
(61) Patent of Addition to Application Number :NA
Filing Date :NA
(62) Divisional to Application Number :NA
Filing Date :NA

(71)**Name of Applicant :**
1)SCHNEIDER ELECTRIC IT CORPORATION
Address of Applicant :132 Fairgrounds Road West Kingston RI 02892 U.S.A.
(72)**Name of Inventor :**
1)DALGAS Mikkel
2)VANGILDER James W.
3)HEALEY Christopher M.
4)JOHANSEN Martin

(57) Abstract :
A system and method for predicting airflow within a data center using a potential flow technique is provided. In one aspect a method includes automatically generating an unstructured grid the unstructured grid comprising a plurality of unstructured grid cells each unstructured grid cell having a size dividing a representation of the data center into the plurality of unstructured grid cells determining airflow velocity values for each of the plurality of unstructured grid cells using airflow velocity potentials determining a temperature value for each one of the plurality of the unstructured grid cells using the airflow velocity values determining a concentration value for each of the plurality of the unstructured grid cells using the airflow velocity values and calculating a comparison result indicating whether the concentration values the airflow velocity values and the temperature values for the plurality of the unstructured grid cells satisfy convergence criteria.

No. of Pages : 42 No. of Claims : 20

(12) PATENT APPLICATION PUBLICATION
(19) INDIA
(22) Date of filing of Application :08/10/2013
(21) Application No.8160/CHENP/2013 A
(43) Publication Date : 07/11/2014

(54) Title of the invention : OFF GAS PURIFICATION DEVICE

(51) International classification :B01J23/44,B01D53/94,B01J29/76
(31) Priority Document No :2011101047
(32) Priority Date :28/04/2011
(33) Name of priority country :Japan
(86) International Application No :PCT/JP2012/050314
Filing Date :11/01/2012
(87) International Publication No :WO 2012/147376
(61) Patent of Addition to Application Number :NA
Filing Date :NA
(62) Divisional to Application Number :NA
Filing Date :NA

(71)**Name of Applicant :**
1)N.E. CHEMCAT CORPORATION
Address of Applicant :4 1 Hamamatsu cho 2 chome Minato ku Tokyo 1056124 Japan
(72)**Name of Inventor :**
1)MENDE Takeshi
2)OKAJIMA Toshinori
3)BANNO Yasuyuki
4)NAGATA Makoto

(57) Abstract :
Provided is an off gas purification catalyst device with which the long term efficient removal of hydrocarbons carbon monoxide nitrogen oxides and microparticulates such as soot from the off gas of a lean burn engine is possible. Provided is an off gas purification catalyst device wherein a noble metal containing oxidation catalyst (DOC) for oxidation of nitrogen oxides (NO) in off gas emitted from a diesel engine reduction agent spray means for feeding reduction agent selected from a urea component or an ammonia component and a noble metal free selective reduction catalyst (SCR) for reducing nitrogen oxides (NOx) by contact with a reducing agent are disposed in succession from the ascending side of the off gas flow path the off gas purification device being characterized in that as a result of the noble metal component of the oxidation catalyst (DOC) containing platinum and palladium and the percentage of platinum particles alone being 20% or less or the average grain size of the noble metal being 4 nm or greater evaporation of the platinum from the oxidation catalyst (DOC) is prevented even when the catalytic bed temperature of the oxidation catalyst (DOC) rises to 900ºC and activity of the selective reduction catalyst (SCR) is maintained.

No. of Pages : 96 No. of Claims : 16

(12) PATENT APPLICATION PUBLICATION
(19) INDIA
(22) Date of filing of Application :27/03/2014
(21) Application No.2359/CHENP/2014 A
(43) Publication Date : 07/11/2014

(54) Title of the invention : TAPERED STRUCTURE CONSTRUCTION

(51) International classification :B23P11/00,B21C37/12,B21C37/18
(31) Priority Document No :61/537013
(32) Priority Date :20/09/2011
(33) Name of priority country :U.S.A.
(86) International Application No :PCT/US2012/056414
Filing Date :20/09/2012
(87) International Publication No :WO 2013/043920
(61) Patent of Addition to Application Number :NA
Filing Date :NA
(62) Divisional to Application Number :NA
Filing Date :NA

(71)**Name of Applicant :**
1)KEYSTONE TOWER SYSTEMS INC.
Address of Applicant :337 Summer Street Boston MA 02210 U.S.A.
(72)**Name of Inventor :**
1)SMITH Eric D.
2)TAKATA Rosalind K.
3)SLOCUM Alexander H.
4)NAYFEH Samir A.

(57) Abstract :
Feeding stock used to form a tapered structure into a curving device such that each point on the stock undergoes rotational motion about a peak location of the tapered structure; and the stock meets a predecessor portion of stock along one or more adjacent edges.

No. of Pages : 45 No. of Claims : 19

(12) PATENT APPLICATION PUBLICATION
(19) INDIA
(22) Date of filing of Application :04/10/2013
(21) Application No.8037/CHENP/2013 A
(43) Publication Date : 07/11/2014

(54) Title of the invention : HEAVY DUTY MILL

(51) International classification :H02K1/14,H02K21/00,B02C15/00
(31) Priority Document No :NA
(32) Priority Date :NA
(33) Name of priority country :NA
(86) International Application No :PCT/CH2011/000070
Filing Date :04/04/2011
(87) International Publication No :WO 2012/135964
(61) Patent of Addition to Application Number :NA
Filing Date :NA
(62) Divisional to Application Number :NA
Filing Date :NA

(71)**Name of Applicant :**
1)FLSmidth A/S
Address of Applicant :Vigerslev All 77 DK 2500 Valby Denmark
(72)**Name of Inventor :**
1)RITTLER Stefan
2)BERCHTEN Stefan

(57) Abstract :
In a drive arrangement for a heavy duty mill an electric motor with a high number of magnetic poles and a stator that is segmented into at least four stator segments is used. By providing one more or all of the stator segments with a three phase winding system a highly modular mill drive with a high power density and therefore reduced space requirements is provided.

No. of Pages : 25 No. of Claims : 17

(12) PATENT APPLICATION PUBLICATION
(19) INDIA
(22) Date of filing of Application :04/10/2013
(21) Application No.8038/CHENP/2013 A
(43) Publication Date : 07/11/2014

(54) Title of the invention : OPTIMIZED LOAD MANAGEMENT

(51) International classification :H02J1/14,H02J3/28,H02J13/00
(31) Priority Document No :10 2011 001 918.9
(32) Priority Date :08/04/2011
(33) Name of priority country :Germany
(86) International Application No :PCT/EP2012/056423
Filing Date :10/04/2012
(87) International Publication No :WO 2012/136843
(61) Patent of Addition to Application Number :NA
Filing Date :NA
(62) Divisional to Application Number :NA
Filing Date :NA

(71)**Name of Applicant :**
1)SMA SOLAR TECHNOLOGY AG
Address of Applicant :Sonnenallee 1 34266 Niestetal Germany
(72)**Name of Inventor :**
1)MAGNUSSEN Bjrn
2)H–HLE Christian
3)THIEL Raimund

(57) Abstract :
For optimizing a chronological developing of consumption of electric power by a group of different consumers (2 to 7) with regard to a supply of electric power including electric power from at least one wind or solar power generator (8) characteristic time curves of the consumption of electric power by the individual consumers (2 to 7) of the group are determined at a high temporal resolution. A prognosis is made of a chronological developing of the supply of electric power from the at least one power generator (8) for a future period of time and a plan for apportioning electric power to the individual consumers (2 to 7) within the future period of time is made based on the characteristic time curves of the consumption of electric power by the individual consumers (2 to 7) and adapted to the prognosis.

No. of Pages : 43 No. of Claims : 60

(12) PATENT APPLICATION PUBLICATION
(19) INDIA
(22) Date of filing of Application :10/10/2013
(21) Application No.8233/CHENP/2013 A
(43) Publication Date : 07/11/2014

(54) Title of the invention : GENERATING A REPORT BASED ON IMAGE DATA

(51) International classification :G06F19/00
(31) Priority Document No :11159820.7
(32) Priority Date :25/03/2011
(33) Name of priority country :EPO
(86) International Application No :PCT/IB2012/051232
Filing Date :15/03/2012
(87) International Publication No :WO 2012/131518
(61) Patent of Addition to Application Number :NA
Filing Date :NA
(62) Divisional to Application Number :NA
Filing Date :NA

(71)**Name of Applicant :**
1)KONINKLIJKE PHILIPS N.V.
Address of Applicant :High Tech Campus 5 NL 5656 AE Eindhoven Netherlands
(72)**Name of Inventor :**
1)BUURMAN Johannes

(57) Abstract :
A system for generating a report based on image data is disclosed. A template selector (1) selecting a template from a plurality of templates the template defining a structure for the report and data fields to be filled in for the report wherein the template further defines associations between data fields and view descriptors wherein a view descriptor defines an image type and a presentation mode of the image type. A data field presenter (2) presenting a representation of the data fields of the template to a user. An image dataset selector (4) automatically selecting at least one image dataset having the image type defined by the view descriptor associated with the selected at least one data field. A view generator (5)automatically generating a view of the at least one selected image dataset based on the presentation mode defined by the view descriptor associated with the selected at least one data field. A report generator (7) for generating the report based on the template and the data provided by the user.

No. of Pages : 20 No. of Claims : 11

(12) PATENT APPLICATION PUBLICATION
(19) INDIA
(22) Date of filing of Application :10/10/2013
(21) Application No.8235/CHENP/2013 A
(43) Publication Date : 07/11/2014

(54) Title of the invention : APPARATUS AND METHOD FOR ELECTRONIC BRACHYTHERAPY

(51) International classification :A61N5/10
(31) Priority Document No :11159620.1
(32) Priority Date :24/03/2011
(33) Name of priority country :EPO
(86) International Application No :PCT/IB2012/051418
Filing Date :26/03/2012
(87) International Publication No :WO 2012/127455
(61) Patent of Addition to Application Number :NA
Filing Date :NA
(62) Divisional to Application Number :NA
Filing Date :NA

(71)**Name of Applicant :**
1)KONINKLIJKE PHILIPS N.V.
Address of Applicant :High Tech Campus 5 NL 5656 AE Eindhoven Netherlands
2)PHILIPS INTELLECTUAL PROPERTY & STANDARDS GMBH
(72)**Name of Inventor :**
1)RIBBING Carolina

(57) Abstract :
In brachytherapy where position information relating to a radiation source is to be generated a guidance system is adapted to acquire and process position data or position and tissue data so that high precision interventional radiotherapy can be carried out especially according to a dose plan and for intra fraction monitoring for a therapy plan or adaptive re planning. The data can be stored and used to refine future treatment plans and for future correlation with long term treatment outcome especially in context with low energy brachytherapy.

No. of Pages : 24 No. of Claims : 15

(12) PATENT APPLICATION PUBLICATION
(19) INDIA
(22) Date of filing of Application :11/09/2013
(21) Application No.7309/CHENP/2013 A
(43) Publication Date : 07/11/2014

(54) Title of the invention : PRESSURE WAVE GENERATOR WITH MOVABLE CONTROL ROD FOR GENERATING A PRESSURE WAVE IN A MEDIUM

(51) International classification :B01J3/08
(31) Priority Document No :61/446965
(32) Priority Date :25/02/2011
(33) Name of priority country :U.S.A.
(86) International Application No :PCT/CA2012/000133
Filing Date :08/02/2012
(87) International Publication No :WO 2012/113057
(61) Patent of Addition to Application Number :NA
Filing Date :NA
(62) Divisional to Application Number :NA
Filing Date :NA

(71)**Name of Applicant :**
1)GENERAL FUSION INC.
Address of Applicant :108 3680 Bonneville Place Burnaby British Columbia V3N 4T5 Canada
(72)**Name of Inventor :**
1)MCILWRAITH Lon
2)SENGER John
3)MONTGOMERY Darcy
4)RICHARDSON Douglas H.
5)KOSTKA Peter
6)BELL Kristin
7)ZINDLER Ryan
8)LABERGE Michel Georges

(57) Abstract :
Examples of a pressure wave generator configured to generate high energy pressure waves in a medium are disclosed. The pressure wave generator can include a movable piston with a guide through which a piston control rod can move or slide. The pressure wave generator can include a transducer coupled to a medium. During an impact of the piston on the transducer the control rod can slide in the guide which can reduce stress on the rod. The pressure wave generator can include a damper to decelerate the control rod independently of the piston. Impact of the piston on the transducer transfers a portion of the piston s kinetic energy into the medium thereby generating pressure waves in the medium. A piston driving system may be used to provide precise and controlled launching or movement of the piston. Examples of methods of operating the pressure wave generator are disclosed.

No. of Pages : 35 No. of Claims : 18

(12) PATENT APPLICATION PUBLICATION
(19) INDIA
(22) Date of filing of Application :04/10/2013
(21) Application No.8066/CHENP/2013 A
(43) Publication Date : 07/11/2014

(54) Title of the invention : SYSTEM AND METHOD FOR FLUORESCENCE AND ABSORBANCE ANALYSIS

(51) International classification :G01N21/64,G01N21/31
(31) Priority Document No :13/042920
(32) Priority Date :08/03/2011
(33) Name of priority country :U.S.A.
(86) International Application No :PCT/US2012/027833
Filing Date :06/03/2012
(87) International Publication No :WO 2012/122151
(61) Patent of Addition to Application Number :NA
Filing Date :NA
(62) Divisional to Application Number :NA
Filing Date :NA

(71)**Name of Applicant :**
1)HORIBA INSTRUMENTS INCORPORATED
Address of Applicant :3880 Park Avenue Edison New Jersey 08820 U.S.A.
(72)**Name of Inventor :**
1)GILMORE Adam M.
2)TONG Xiaomei

(57) Abstract :
A system or method for analyzing a sample include an input light source a double subtractive monochromator positioned to receive light from the input light source and to sequentially illuminate the sample with each of a plurality of wavelengths a multi channel fluorescence detector positioned to receive and substantially simultaneously detect multiple wavelengths of light emitted by the sample for each of the plurality of excitation wavelengths an absorption detector positioned to receive and detect light passing through the sample and a computer in communication with the monochromator the fluorescence detector and the absorption detector the computer controlling the monochromator to sequentially illuminate the sample with each of the plurality of wavelengths while measuring absorption and fluorescence of the sample based on signals received from the fluorescence and absorption detectors

No. of Pages : 38 No. of Claims : 21

(12) PATENT APPLICATION PUBLICATION
(19) INDIA
(22) Date of filing of Application :04/10/2013
(21) Application No.8067/CHENP/2013 A
(43) Publication Date : 07/11/2014

(54) Title of the invention : ILLUSTRATING CROSS CHANNEL CONVERSION PATHS

(51) International classification :G06Q50/00,G06F15/16,G06F17/30
(31) Priority Document No :13/084546
(32) Priority Date :11/04/2011
(33) Name of priority country :U.S.A.
(86) International Application No :PCT/US2011/054069
Filing Date :29/09/2011
(87) International Publication No :WO 2012/141734
(61) Patent of Addition to Application Number :NA
Filing Date :NA
(62) Divisional to Application Number :NA
Filing Date :NA

(71)**Name of Applicant :**
1)GOOGLE INC.
Address of Applicant :1600 Amphitheatre Parkway Mountain View California 94043 U.S.A.
(72)**Name of Inventor :**
1)HOLMES Laura
2)CAI Cody
3)BAGHDASSARIAN Leo
4)HSIAO Sissie Ling le

(57) Abstract :
Methods systems and apparatuses including computer programs encoded on computer readable media for generating Venn like diagram illustrating cross channel conversion paths. In one aspect a plurality of conversion paths are received. Each conversion path includes one or more user interactions that include a plurality of dimensional data. A sorted list of channel groups that includes one or more group rules is received and each user interaction is grouped into a channel based upon the channel groups. A selection of channels to visualize is received and an image including one circle for each selected channel is generated. The circles are optimally placed to maximize the accuracy of the overlapped regions with channel group data.

No. of Pages : 66 No. of Claims : 20

(12) PATENT APPLICATION PUBLICATION
(19) INDIA
(22) Date of filing of Application :11/10/2013
(21) Application No.8259/CHENP/2013 A
(43) Publication Date : 07/11/2014

(54) Title of the invention : MULTILAYER THIN FILM DRUG DELIVERY DEVICE AND METHODS OF MAKING AND USING THE SAME

(51) International classification :A61K9/00
(31) Priority Document No :61/475373
(32) Priority Date :14/04/2011
(33) Name of priority country :U.S.A.
(86) International Application No :PCT/US2012/033366
Filing Date :12/04/2012
(87) International Publication No :WO 2012/142318
(61) Patent of Addition to Application Number :NA
Filing Date :NA
(62) Divisional to Application Number :NA
Filing Date :NA

(71)**Name of Applicant :**
1)THE REGENTS OF THE UNIVERSITY OF CALIFORNIA
Address of Applicant :1111 Franklin Street 12th Floor Oakland California 94607 U.S.A.
(72)**Name of Inventor :**
1)DESAI Tejal A.
2)STEEDMAN Mark Rory
3)BHISITKUL Robert B.
4)BERNARDS Daniel A.
5)LANCE Kevin D.

(57) Abstract :
Multilayer thin film devices that include a bioactive agent for elution to the surrounding tissue upon administration to a subject are provided. The multilayer thin film devices are useful as medical devices such as ocular devices. Also provided are methods and kits for localized delivery of a bioactive agent to a tissue of a subject and methods of preparing the subject devices. The multilayer thin film medical device includes a first layer a bioactive agent and a second layer. The first and the second layers may be porous or non porous. The devices have a furled structure suitable for administration to a subject.

No. of Pages : 71 No. of Claims : 137

(12) PATENT APPLICATION PUBLICATION
(19) INDIA
(22) Date of filing of Application :10/10/2013
(21) Application No.8240/CHENP/2013 A
(43) Publication Date : 07/11/2014

(54) Title of the invention : CHILDBIRTH LABOR COACH WITH PACED BREATHING

(51) International classification :A61M16/00
(31) Priority Document No :61/467167
(32) Priority Date :24/03/2011
(33) Name of priority country :U.S.A.
(86) International Application No :PCT/IB2012/051184
Filing Date :13/03/2012
(87) International Publication No :WO 2012/127363
(61) Patent of Addition to Application Number :NA
Filing Date :NA
(62) Divisional to Application Number :NA
Filing Date :NA

(71)**Name of Applicant :**
1)KONINKLIJKE PHILIPS N.V.
Address of Applicant :High Tech Campus 5 NL 5656 AE Eindhoven Netherlands
(72)**Name of Inventor :**
1)OCONNOR Nathan Francis

(57) Abstract :
A system (10) configured to prompt a subject (12) to consciously alter one or more breathing parameters during childbirth. The system includes a pressure generator (14) that generates a pressurized flow of breathable gas for delivery to an airway of the subject during childbirth and a processor (22) that controls the pressure generator to adjust one or more gas parameters of the gas in the pressurized flow of breathable gas to provide breathing cues to the subject in accordance with a breathing regime associated with labor contractions wherein the breathing cues prompt the subject to consciously alter one or more breathing parameters of respiration..

No. of Pages : 30 No. of Claims : 15

(12) PATENT APPLICATION PUBLICATION
(19) INDIA
(22) Date of filing of Application :10/10/2013
(21) Application No.8241/CHENP/2013 A
(43) Publication Date : 07/11/2014

(54) Title of the invention : COMPRESSED SENSING MR IMAGE RECONSTRUCTION USING CONSTRAINT FROM PRIOR ACQUISITION

(51) International classification :G01R33/56,G01R33/561,G01R33/567
(31) Priority Document No :11159494.1
(32) Priority Date :24/03/2011
(33) Name of priority country :EPO
(86) International Application No :PCT/IB2012/050930
Filing Date :28/02/2012
(87) International Publication No :WO 2012/127341
(61) Patent of Addition to Application Number :NA
Filing Date :NA
(62) Divisional to Application Number :NA
Filing Date :NA

(71)**Name of Applicant :**
1)KONINKLIJKE PHILIPS N.V.
Address of Applicant :High Tech Campus 5 NL 5656 AE Eindhoven Netherlands
2)PHILIPS INTELLECTUAL PROPERTY & STANDARDS GMBH
(72)**Name of Inventor :**
1)DONEVA Mariya Ivanova
2)REMMELE Stefanie
3)B–RNERT Peter
4)MAZURKEWITZ Peter
5)SENEGAS Julien
6)KEUPP Jochen
7)NEHRKE Kay

(57) Abstract :
The invention relates to a method of MR imaging of at least a portion of a body (10) of a patient placed in an examination volume of a MR device (1) the method comprising the steps of: subjecting the portion of the body(10) to a first imaging sequence for acquiring a first signal data set (21); subjecting the portion of the body (10) to a second imaging sequence for acquiring a second signal data set (23) wherein the imaging parameters of the second imaging sequence differ from the imaging parameters of the first imaging sequence; reconstructing a MR image from the second signal data set (23) by means of regularization using the first signal data set (21) as prior information. Moreover the invention relates to a MR device (1) and to a computer program for a MR device (1).

No. of Pages : 17 No. of Claims : 11

(12) PATENT APPLICATION PUBLICATION
(19) INDIA
(22) Date of filing of Application :10/10/2013
(21) Application No.8242/CHENP/2013 A
(43) Publication Date : 07/11/2014

(54) Title of the invention : DEFIBRILLATOR WITH PROTOCOL FOR SELECTIVELY INTERRUPTING CPR

(51) International classification :A61N1/39
(31) Priority Document No :61/466514
(32) Priority Date :23/03/2011
(33) Name of priority country :U.S.A.
(86) International Application No :PCT/IB2012/051251
Filing Date :15/03/2012
(87) International Publication No :WO 2012/127380
(61) Patent of Addition to Application Number :NA
Filing Date :NA
(62) Divisional to Application Number :NA
Filing Date :NA

(71)**Name of Applicant :**
1)KONINKLIJKE PHILIPS N.V.
Address of Applicant :High Tech Campus 5 NL 5656 AE Eindhoven Netherlands
(72)**Name of Inventor :**
1)JORGENSON Dawn Blilie
2)CARY Christian
3)FROMAN Jamie
4)RUCKER Kenneth

(57) Abstract :
An automated external defibrillator (AED) (10) having a treatment decision processor (28) is described which follows a shock first or a CPR first rescue protocol after identification of a treatable arrhythmia depending upon an estimate of the probability of successful resuscitation made from an analysis of a patient parameter measured at the beginning of the rescue. The invention may also follow different CPR protocols depending on the estimate. The invention also may use the trend of the measured patient parameter to adjust the CPR protocol either during a CPR pause or after the initial CPR pause. The AED (10) thus enables an improved rescue protocol.

No. of Pages : 32 No. of Claims : 15

(12) PATENT APPLICATION PUBLICATION
(19) INDIA
(22) Date of filing of Application :10/10/2013
(21) Application No.8243/CHENP/2013 A
(43) Publication Date : 07/11/2014

(54) Title of the invention : METHODS AND SYSTEMS TO PROMOTE TARGETED INTER PATIENT INTERACTIONS TO INCREASE PATIENT ADHERENCE.

(51) International classification :G06F19/00
(31) Priority Document No :61/466490
(32) Priority Date :23/03/2011
(33) Name of priority country :U.S.A.
(86) International Application No :PCT/IB2012/050918
Filing Date :28/02/2012
(87) International Publication No :WO 2012/127337
(61) Patent of Addition to Application Number :NA
Filing Date :NA
(62) Divisional to Application Number :NA
Filing Date :NA

(71)**Name of Applicant :**
1)KONINKLIJKE PHILIPS N.V.
Address of Applicant :High Tech Campus 5 NL 5656 AE Eindhoven Netherlands
(72)**Name of Inventor :**
1)FOX Nathaniel Solomon
2)LAURA LAPOINT Manuel
3)BALOA WELZIEN Leonardo Alberto

(57) Abstract :
Inter patient networks in particular virtualenvironments such as an online forum may foster a sense of community and helppromote user adherence to a (positive airway pressure) therapyregimen despite various practical limitations. Systems and methods are provided to alleviate such limitations by providing a virtual environment in which users are matched (anonymously) in pairs or groups based on usage information of their respective therapeutic devices.

No. of Pages : 20 No. of Claims : 16

(12) PATENT APPLICATION PUBLICATION
(19) INDIA
(22) Date of filing of Application :10/10/2013
(21) Application No.8244/CHENP/2013 A
(43) Publication Date : 07/11/2014

(54) Title of the invention : PULSE OXIMETRY IN RESPIRATORY THERAPY PATIENT INTERFACE

(51) International classification :A61M16/00,A61M16/06
(31) Priority Document No :61/466488
(32) Priority Date :23/03/2011
(33) Name of priority country :U.S.A.
(86) International Application No :PCT/IB2012/051221
Filing Date :15/03/2012
(87) International Publication No :WO 2012/127370
(61) Patent of Addition to Application Number :NA
Filing Date :NA
(62) Divisional to Application Number :NA
Filing Date :NA

(71)**Name of Applicant :**
1)KONINKLIJKE PHILIPS N.V.
Address of Applicant :High Tech Campus 5 NL 5656 AE Eindhoven Netherlands
(72)**Name of Inventor :**
1)LOTZ Gary William
2)DIACOPOULOS Elias George
3)MECHLENBURG Douglas
4)DUFF Winslow Kevin

(57) Abstract :
Provided are systems and methods for utilizing blood oxygenation information with respiratory therapy. These systems and methods may provide respiratory therapy to a patient (119) which may include providing a flow of gas to a patient via a patient interface. Blood oxygenation information for the patient is then obtained. The blood oxygenation information is then used to adjust the respiratory therapy advance a diagnosis for the patient or for other purposes.

No. of Pages : 17 No. of Claims : 15

(12) PATENT APPLICATION PUBLICATION
(19) INDIA
(22) Date of filing of Application :04/10/2013
(21) Application No.8052/CHENP/2013 A
(43) Publication Date : 07/11/2014

(54) Title of the invention : FILM WINDING CORE AND WOUND FILM BODY USING SAME

(51) International classification :B65H75/10
(31) Priority Document No :2011054158
(32) Priority Date :11/03/2011
(33) Name of priority country :Japan
(86) International Application No :PCT/JP2012/001667
Filing Date :09/03/2012
(87) International Publication No :WO 2012/124304
(61) Patent of Addition to Application Number :NA
Filing Date :NA
(62) Divisional to Application Number :NA
Filing Date :NA

(71)**Name of Applicant :**
1)NITTO DENKO CORPORATION
Address of Applicant :1 2 Shimohozumi 1 chome Ibaraki shi Osaka 5678680 Japan
(72)**Name of Inventor :**
1)NOUMI Shunsuke
2)SAYANAGI Shunichirou

(57) Abstract :
A film winding core (10) has: a cylindrical bearing portion (12); a plurality of blade portions (13) extending from the bearing portion (12) in the radial direction thereof; one or a plurality of rim portions (15 15b 15d) provided on the tips of the blade portions (13); and a plurality of film support portions (14) that are fixed to the rim portion (15 15b 15d) and that support a film (18). The support portions (14) comprise an elastic material such as sponge rubber or foam and are in the shape of a semi cylinder a rectangular column or a hollow semi cylinder.

No. of Pages : 24 No. of Claims : 12

(12) PATENT APPLICATION PUBLICATION
(19) INDIA
(22) Date of filing of Application :10/10/2013
(21) Application No.8250/CHENP/2013 A
(43) Publication Date : 07/11/2014

(54) Title of the invention : GRAFTED PARTICLES FOR USE IN SKIN CARE APPLICATIONS

(51) International classification :A61K8/06,A61K8/19,A61K8/25
(31) Priority Document No :61/471877
(32) Priority Date :05/04/2011
(33) Name of priority country :U.S.A.
(86) International Application No :PCT/EP2012/055921
Filing Date :02/04/2012
(87) International Publication No:WO 2012/136607
(61) Patent of Addition to Application Number :NA
Filing Date :NA
(62) Divisional to Application Number :NA
Filing Date :NA

(71)**Name of Applicant :**
1)AKZO NOBEL CHEMICALS INTERNATIONAL B.V.
Address of Applicant :Stationsstraat 77 NL 3811 MH Amersfoort Netherlands
(72)**Name of Inventor :**
1)LEBLANC Jean Pierre
2)MILLER James Albert

(57) Abstract :
A skin care formulation includes a dispersion or emulsion including at least one particle polymer hybrid and a cosmetically acceptable additive. The polymer particle hybrid includes at least one particle grafted with at least one polymer. The skin care formulation provides improved water resistance with limited impact on the sensory feel of the formulation (such as tackiness).

No. of Pages : 38 No. of Claims : 15

(12) PATENT APPLICATION PUBLICATION
(19) INDIA
(22) Date of filing of Application :10/10/2013
(21) Application No.8255/CHENP/2013 A
(43) Publication Date : 07/11/2014

(54) Title of the invention : SYSTEMS AND METHODS FOR PARAGRAPH BASED DOCUMENT SEARCHING

(51) International classification :G06F17/30
(31) Priority Document No :13/077223
(32) Priority Date :31/03/2011
(33) Name of priority country :U.S.A.
(86) International Application No :PCT/US2012/030235
Filing Date :23/03/2012
(87) International Publication No :WO 2012/134972
(61) Patent of Addition to Application Number :NA
Filing Date :NA
(62) Divisional to Application Number :NA
Filing Date :NA

(71)**Name of Applicant :**
1)LEXISNEXIS A DIVISION OF REED ELSEVIER INC.
Address of Applicant :9443 Springboro Pike Miamisburg OH 45342 U.S.A.
(72)**Name of Inventor :**
1)ZHANG Paul
2)STEINER David

(57) Abstract :
A computerized method of searching a collection of electronic documents may include comparing search terms to sets of paragraph terms associated with paragraphs in the documents. Search terms and paragraph terms may be standardized prior to the comparison. The method may also include generating paragraph scores for the paragraphs using term weight values associated with paragraph terms that match search terms generating paragraph scores for the paragraphs and using the paragraph scores to generate overall document scores. The method may also include using the overall document scores to determine a set of search results and providing the search results to a display.

No. of Pages : 27 No. of Claims : 20

(12) PATENT APPLICATION PUBLICATION
(19) INDIA
(22) Date of filing of Application :11/10/2013
(21) Application No.8256/CHENP/2013 A
(43) Publication Date : 07/11/2014

(54) Title of the invention : RELAY MULTICAST TRANSMISSION METHOD SYSTEM RELAY SELECTION SERVER RELAY NODES AND TERMINALS

(51) International classification :H04L12/28
(31) Priority Document No :201110073731.5
(32) Priority Date :25/03/2011
(33) Name of priority country :China
(86) International Application No :PCT/CN2012/073053
Filing Date :26/03/2012
(87) International Publication No :WO 2012/130124
(61) Patent of Addition to Application Number :NA
Filing Date :NA
(62) Divisional to Application Number :NA
Filing Date :NA

(71)**Name of Applicant :**
1)CHINA MOBILE COMMUNICATIONS CORPORATION
Address of Applicant :No.29 Jinrong Ave. Xicheng District Beijing 100032 China
(72)**Name of Inventor :**
1)LE Lifeng
2)ZHANG Jianyin
3)PENG Jin

(57) Abstract :
The present application provides a method and a system for relay multicast transmission a relay selection server relay nodes and terminals. According to the present application the first terminal sends a relay selection request to the relay selection server; the relay selection server determines according the relay selection request multiple second terminals which will communicate with the first terminal and determines the multicast relay node corresponding to at least two second terminals and sends relay multicast notification to the first terminal and the multicast relay node separately; the first terminal sends a piece of data to the multicast relay node and said multicast relay node copies the data from the first terminal and multicasts the data to at least two corresponding second terminals. According to the present application terminals only need to send a piece of data to the multicast relay node and the data are copied and multicasted to multiple other terminals by the multicast relay node thereby improving the transmission efficiency.

No. of Pages : 23 No. of Claims : 15

(12) PATENT APPLICATION PUBLICATION
(19) INDIA
(22) Date of filing of Application :11/10/2013

(21) Application No.8257/CHENP/2013 A
(43) Publication Date : 07/11/2014

(54) Title of the invention : SOCIAL NETWORK BASED PKI AUTHENTICATION

(51) International classification :H04L9/32,H04L9/00,H04L29/06
(31) Priority Document No :61/480270
(32) Priority Date :28/04/2011
(33) Name of priority country :U.S.A.
(86) International Application No :PCT/US2012/035715
Filing Date :29/04/2012
(87) International Publication No :WO 2012/149513
(61) Patent of Addition to Application Number :NA
Filing Date :NA
(62) Divisional to Application Number :NA
Filing Date :NA

(71)**Name of Applicant :**
1)QUALCOMM Incorporated
Address of Applicant :Attn: International IP Administration 5775 Morehouse Drive San Diego California 92121 U.S.A.
(72)**Name of Inventor :**
1)NARAYANAN Vidya
2)ROSE Gregory Gordon
3)DONDETI Lakshminath Reddy

(57) Abstract :
A user device generates a social graph based user certificate that conveys a trust level to other users of the social network. A user certificate for a user is obtained the user having a user public key and corresponding user private key. A plurality of potential signers is identified within one or more social networks. The certificate is then sent to the identified plurality of potential signers. One or more signed versions of the user certificate may be received from at least some of the plurality of potential signers. The user device may assign a signer weight to each signed version of the user certificate each corresponding signer weight associated with the signer of each signed version of the certificate. The user certificate the user signature one or more signed versions of the user certificate and the user assigned signer weights are distributed to one or more recipients.

No. of Pages : 54 No. of Claims : 49

(12) PATENT APPLICATION PUBLICATION
(19) INDIA
(22) Date of filing of Application :11/10/2013
(21) Application No.8260/CHENP/2013 A
(43) Publication Date : 07/11/2014

(54) Title of the invention : PLAQUE ARRAY METHOD AND COMPOSITIONS FOR FORMING AND DETECTING PLAQUES

(51) International classification :G01N33/52
(31) Priority Document No :61/566580
(32) Priority Date :02/12/2011
(33) Name of priority country :U.S.A.
(86) International Application No :PCT/US2012/066412
Filing Date :21/11/2012
(87) International Publication No :WO 2013/081946
(61) Patent of Addition to Application Number :NA
Filing Date :NA
(62) Divisional to Application Number :NA
Filing Date :NA

(71)**Name of Applicant :**
1)PLAXGEN INC.
Address of Applicant :525 Del Ray Avenue Suite B. Sunnyvale CA 94085 U.S.A.
(72)**Name of Inventor :**
1)MADASAMY Shanmugavel

(57) Abstract :
Provided herein are methods and compositions for the in vitro formation of an array of plaque particles for use in biological assays diagnosis drug discovery and drug development. More specifically the embodiments described herein relate to the in vitro synthesis of plaque particles when treated with biofluids and identification of such plaque particles by a variety of detection systems. In particular the resulting in vitro plaque particles resemble atherosclerotic and amyloid plaques. The plaque embodiments described may be used to enable rapid sensitive and/or efficient drug discovery medical diagnostics and patient stratification.

No. of Pages : 67 No. of Claims : 30

(12) PATENT APPLICATION PUBLICATION
(19) INDIA
(22) Date of filing of Application :11/10/2013
(21) Application No.8262/CHENP/2013 A
(43) Publication Date : 07/11/2014

(54) Title of the invention : IMAGE ACQUISITION AND/OR IMAGE RELATED PARAMETER RECOMMENDER

(51) International classification :G06F19/00
(31) Priority Document No :61/468834
(32) Priority Date :29/03/2011
(33) Name of priority country :U.S.A.
(86) International Application No :PCT/IB2012/051298
Filing Date :19/03/2012
(87) International Publication No :WO 2012/131524
(61) Patent of Addition to Application Number :NA
Filing Date :NA
(62) Divisional to Application Number :NA
Filing Date :NA

(71)**Name of Applicant :**
1)KONINKLIJKE PHILIPS N.V.
Address of Applicant :High Tech Campus 5 NL 5656 AE Eindhoven Netherlands
2)PHILIPS INTELLECTUAL PROPERTY & STANDARDS GMBH
(72)**Name of Inventor :**
1)COHEN SOLAL Eric
2)LEE Michael Chun chieh
3)REMMELE Stefanie
4)DRIES Sebastian Peter Michael
5)SENEGAS Julien
6)WALKER Matthew Joseph

(57) Abstract :
A method includes obtaining image data for a patient. The image data corresponds to acquisition data from an imaging acquisition from a set of planned image acquisitions in an examination plan for the patient. The method further includes analyzing the image data with a processor based on an imaging practice guideline and producing electronically formatted data indicative of the analysis. The processor generates a signal indicative of a recommendation of a change to the examination plan based on the data indicative of the analysis.

No. of Pages : 23 No. of Claims : 29

(12) PATENT APPLICATION PUBLICATION
(19) INDIA
(22) Date of filing of Application :11/10/2013
(21) Application No.8264/CHENP/2013 A
(43) Publication Date : 07/11/2014

(54) Title of the invention : DRIVING DEVICE AND METHOD FOR DRIVING A LOAD IN PARTICULAR AN LED ASSEMBLY

(51) International classification :H05B33/08
(31) Priority Document No :11160015.1
(32) Priority Date :28/03/2011
(33) Name of priority country :EPO
(86) International Application No :PCT/IB2012/051477
Filing Date :28/03/2012
(87) International Publication No :WO 2012/131592
(61) Patent of Addition to Application Number :NA
Filing Date :NA
(62) Divisional to Application Number :NA
Filing Date :NA

(71)**Name of Applicant :**
1)KONINKLIJKE PHILIPS N.V.
Address of Applicant :High Tech Campus 5 NL 5656 AE Eindhoven Netherlands
2)PHILIPS INTELLECTUAL PROPERTY & STANDARDS GMBH
(72)**Name of Inventor :**
1)RADERMACHER Harald Josef G¼nther
2)BLANKEN Pieter Gerrit
3)QIU Yifeng
4)TAO Haimin
5)VAN LANGEVELDE Ronald
6)KURT Ralph

(57) Abstract :
Driver device and a corresponding driving method for driving a load in particular an LED assembly comprising one or more LEDs. To provide a better performance better cost efficiency improved power factor and reduced losses a driver device (1 1 2 2) is provided comprising a rectifier unit (10) for rectifying a received AC supply voltage (V) load terminals (20) for providing a drive voltage (V) and/or a drive current (I) for driving said load a capacitive storage unit (30) coupled between said rectifier unit and said load terminals for storing electrical energy provided by said rectifier unit and providing electrical energy to said load and a bridge switching unit (40) coupled between said rectifier unit and said load for switching said capacitive storage unit into a load current path from said rectifier unit to said load terminals with a desired polarity and for switching said capacitive storage unit out of said load current path.

No. of Pages : 85 No. of Claims : 15

(12) PATENT APPLICATION PUBLICATION
(19) INDIA
(22) Date of filing of Application :11/10/2013

(21) Application No.8265/CHENP/2013 A
(43) Publication Date : 07/11/2014

(54) Title of the invention : LIGHT OUTPUT DEVICE WITH MOVABLE LIGHT GUIDE SYSTEM

(51) International classification :F21V14/00,F21V8/00,G02B6/35
(31) Priority Document No :11159929.6
(32) Priority Date :28/03/2011
(33) Name of priority country :EPO
(86) International Application No :PCT/IB2012/051422
Filing Date :26/03/2012
(87) International Publication No :WO 2012/131560
(61) Patent of Addition to Application Number :NA
Filing Date :NA
(62) Divisional to Application Number :NA
Filing Date :NA

(71)**Name of Applicant :**
1)KONINKLIJKE PHILIPS N.V.
Address of Applicant :High Tech Campus 5 NL 5656 AE Eindhoven Netherlands
(72)**Name of Inventor :**
1)VISSENBERG Michel Cornelis Josephus Marie
2)VAN GORKOM Ramon Pascal
3)VERHOEVEN Mark Johannes Antonius
4)DUIJMELINK Andreas Aloysius Henricus
5)BUKKEMS Peter Johannes Martinus
6)DE WILT Monica Antonia Maria
7)FOEDERER Richard Josephus Arnoldus Maria

(57) Abstract :
The invention relates to a light output device (1; 10; 30) controllable to provide different light output functions. The light output device comprises a light source arrangement (12; 31) configured to emit light; and a light guiding system (10; 32) arranged to receive the light and configured to guide the light to at least one light output surface of the light guiding system. The light guiding system (10; 32) comprises at least a first light guide (11b; 37) and a second light guide (11a; 40 41); and the light guiding system (10; 32) is movable relative to the light source arrangement (12; 31) between at least a first position where light output by the light source arrangement is guided by the first light guide (11b; 37) to provide a first light output function and a second position where light output by the light source arrangement is guided by the second light guide (11a; 40 41) to provide a second light output function different from the first light output function. The present invention is based on the realization that different light output functions conveniently and intuitively can be achieved by moving a light guiding system comprising at least two light guides relative to a stationary light source arrangement. Hereby different light output functions can be achieved with a single stationary light source arrangement.

No. of Pages : 19 No. of Claims : 15

(12) PATENT APPLICATION PUBLICATION
(19) INDIA
(22) Date of filing of Application :17/09/2013
(21) Application No.7472/CHENP/2013 A
(43) Publication Date : 07/11/2014

(54) Title of the invention : METHOD FOR RANDOM ACCESS

(51) International classification :H04W74/08,H04W76/02
(31) Priority Document No :201110089953.6
(32) Priority Date :02/04/2011
(33) Name of priority country :China
(86) International Application No :PCT/IB2012/000901
Filing Date :30/03/2012
(87) International Publication No :WO 2012/137077
(61) Patent of Addition to Application Number :NA
Filing Date :NA
(62) Divisional to Application Number :NA
Filing Date :NA

(71)**Name of Applicant :**
1)ALCATAL LUCENT
Address of Applicant :3 avenue Octave Grard F 75007 Paris France
(72)**Name of Inventor :**
1)YANG Tao
2)LIM Seau Sian

(57) Abstract :
The present invention proposes a method in an eNB in wireless communication network based on carrier aggregation (CA) transmission for controlling random access performed by UE wherein the method comprises: determining whether the UE is out of UL sync on all cells wherein the cells comprises Pcell and Scell: sending Physical Downlink Control Channel (PDCCH) order signaling if the UE is out of UL sync on all the cells wherein the PDCCH order signaling is used to indicating the UE to perform random access. A method in a mobile station in wireless communication network based on carrier aggregation (CA) transmission for random access wherein the mobile station is configured a Pcell and at least one Scell and the method comprises: determining whether random access is needed on at least one cell of the cells wherein the cells comprises the Pcell and the at least one Scell; performing random access on at least one cell of all the cells if it is determined that random access is needed on at least one cell of the cells.

No. of Pages : 16 No. of Claims : 13

(12) PATENT APPLICATION PUBLICATION
(19) INDIA
(22) Date of filing of Application :14/10/2013
(21) Application No.8302/CHENP/2013 A
(43) Publication Date : 07/11/2014

(54) Title of the invention : MULTILAYER TEXTILE SLEEVE AND METHOD OF CONSTRUCTION THEREOF

(51) International classification :B60R16/02,D03D3/02,D03D11/00
(31) Priority Document No :61/476366
(32) Priority Date :18/04/2011
(33) Name of priority country :U.S.A.
(86) International Application No :PCT/US2012/034060
Filing Date :18/04/2012
(87) International Publication No :WO 2012/145389
(61) Patent of Addition to Application Number :NA
Filing Date :NA
(62) Divisional to Application Number :NA
Filing Date :NA

(71)**Name of Applicant :**
1)FEDERAL MOGUL POWERTRAIN INC.
Address of Applicant :26555 Northwestern Highway Southfield MI 48033 U.S.A.
(72)**Name of Inventor :**
1)YOSHIMURA Masanori
2)MALLOY Cassie M.
3)ZHANG Zhong Huai
4)LUDY Linwood
5)WINTERS Danny

(57) Abstract :
A multilayer textile sleeve and method of construction thereof is provided. The sleeve includes a textile wall having opposite edges extending lengthwise along a longitudinal axis of the sleeve between opposite ends. The opposite edges are configured to overlap one another to bound a central cavity of the sleeve. The wall has an inner layer with opposite inner and outer faces and an outer layer with opposite inner and outer faces. The inner and outer layers overlap one another and are constructed of interlinked yarn. The inner and outer layers are integrally connected to one another across interlinked portions adjacent the opposite edges by yarn common to each of the inner and outer layers.

No. of Pages : 16 No. of Claims : 14

(12) PATENT APPLICATION PUBLICATION
(19) INDIA
(22) Date of filing of Application :14/10/2013
(21) Application No.8303/CHENP/2013 A
(43) Publication Date : 07/11/2014

(54) Title of the invention : PISTON AND METHOD OF MAKING A PISTON

(51) International classification :B23P15/10,B22D15/02,F02F3/00
(31) Priority Document No :61/476008
(32) Priority Date :15/04/2011
(33) Name of priority country :U.S.A.
(86) International Application No :PCT/US2012/033555
Filing Date :13/04/2012
(87) International Publication No :WO 2012/142433
(61) Patent of Addition to Application Number :NA
Filing Date :NA
(62) Divisional to Application Number :NA
Filing Date :NA

(71)**Name of Applicant :**
1)FEDERAL MOGUL CORPORATION
Address of Applicant :26555 Northwestern Highway Southfield MI 48033 U.S.A.
(72)**Name of Inventor :**
1)MARTINS Airton
2)RIBEIRO Carmo

(57) Abstract :
A one piece piston (20) including a combustion bowl (26) which is cast to its final form and includes at least one irregularity spaced from a central axis (A). The piston (20) is initially fabricated of an upper crown member (22) and a lower crown member (24) which are joined together. The piston (20) is then chucked into a machine tool (54) such as a CNC lathe which locates either the piston s top surface (32) or a portion of the combustion bowl (26) and establishes its location as a datum plane. It is this datum plane which serves as a reference location for subsequent machining operations of the piston (20).

No. of Pages : 18 No. of Claims : 31

(12) PATENT APPLICATION PUBLICATION
(19) INDIA
(22) Date of filing of Application :15/10/2013
(21) Application No.8305/CHENP/2013 A
(43) Publication Date : 07/11/2014

(54) Title of the invention : DEVICES AND METHODS FOR WARPING AND HOLE FILLING DURING VIEW SYNTHESIS

(51) International classification :G06T5/00
(31) Priority Document No :61/476199
(32) Priority Date :15/04/2011
(33) Name of priority country :U.S.A.
(86) International Application No :PCT/US2012/030899
Filing Date :28/03/2012
(87) International Publication No :WO 2012/141890
(61) Patent of Addition to Application Number :NA
Filing Date :NA
(62) Divisional to Application Number :NA
Filing Date :NA

(71)**Name of Applicant :**
1)QUALCOMM INCORPORATED
Address of Applicant :5775 Morehouse Drive San Diego CA 92121 U.S.A.
(72)**Name of Inventor :**
1)VEERA Karthic
2)CHEN Ying
3)DU Junchen
4)KARCZEWICZ Marta

(57) Abstract :
Implementations include methods and systems for a converting reference images or video to 3D images or video. A two step conversion is described which accomplishes warping and hole filling on a pixel by pixel basis. In one implementation of a plurality of pixel values of a reference image at a plurality of first collinear pixels locations are successively mapped to a respective plurality of second pixel locations of a destination image. Between two of the mappings a location of a hole between two of the second pixel locations may be identified and filled.

No. of Pages : 44 No. of Claims : 34

(12) PATENT APPLICATION PUBLICATION
(19) INDIA
(22) Date of filing of Application :28/03/2013
(21) Application No.2441/CHENP/2013 A
(43) Publication Date : 07/11/2014

(54) Title of the invention : TENSIONER WITH EXPANDING SPRING FOR RADIAL FRICTIONAL ASYMMETRIC DAMPING

(51) International classification :F16H7/12
(31) Priority Document No :12/874797
(32) Priority Date :02/09/2010
(33) Name of priority country :U.S.A.
(86) International Application No :PCT/US2011/046410
Filing Date :03/08/2011
(87) International Publication No :WO 2012/030464
(61) Patent of Addition to Application Number :NA
Filing Date :NA
(62) Divisional to Application Number :NA
Filing Date :NA

(71)**Name of Applicant :**
1)DAYCO IP HOLDINGS LLC
Address of Applicant :2025 W. Sunshine Street Suite L145 Springfield MO 65807 U.S.A.
(72)**Name of Inventor :**
1)LANNUTTI Anthony E.
2)CRIST Robert J.
3)LINDSTROM James Kevin

(57) Abstract :
A tensioner may be part of a power system to tension an endless power transmitting element. The tensioner includes an arm having an arm arbor with a slot therethrough that is rotatable about a first axis a bushing having a sleeve that includes a cut out and a removable sleeve segment that has a protrusion thereon the sleeve segment being receivable in the cut out with the protrusion in the slot and a spring coupled to the arm for rotation of the arm about the first axis into tensioning engagement with a power transmitting element. The spring is positioned where it can radially expand into contact with the protrusion of the bushing at least the protrusion on the sleeve segment as the arm is rotated in a direction opposite the direction of tensioning engagement such that the bushing is urged radially outward relative to the arm arbor to provide frictional damping.

No. of Pages : 24 No. of Claims : 17

(12) PATENT APPLICATION PUBLICATION
(19) INDIA
(22) Date of filing of Application :08/10/2013
(21) Application No.8150/CHENP/2013 A
(43) Publication Date : 07/11/2014

(54) Title of the invention : A MRI METHOD OF FASTER CHANNEL BY CHANNEL RECONSTRUCTION WITHOUT IMAGE DEGRADATION

(51) International classification :G01R33/561,G01R33/565
(31) Priority Document No :61/453564
(32) Priority Date :17/03/2011
(33) Name of priority country :U.S.A.
(86) International Application No :PCT/IB2012/051265
Filing Date :16/03/2012
(87) International Publication No :WO 2012/123921
(61) Patent of Addition to Application Number :NA
Filing Date :NA
(62) Divisional to Application Number :NA
Filing Date :NA

(71)**Name of Applicant :**
1)KONINKLIJKE PHILIPS N.V.
Address of Applicant :High Tech Campus 5 NL 5656 AE Eindhoven Netherlands
(72)**Name of Inventor :**
1)HUANG Feng
2)LIN Wei

(57) Abstract :
A plurality of coil elements (18 18) and corresponding receivers (26) define a plurality of channels each carrying a corresponding partial k space data set (60 64). One or more processors (30) generate (80) a first image representation (76) based on the plurality of partial k space data sets generate a relative sensitivity map (82) for each of the channels project (90) the first image representation (76) with each of the relative sensitivity maps (82) to generate a plurality of recreated k space data sets (92) and each partial k space data and the corresponding recreated k space data set are combined to generate substituted k space data sets (96). The substituted k space data sets are reconstructed (100) into a plurality of images (102) which are combined (104) to create a final image (106).

No. of Pages : 18 No. of Claims : 20

(12) PATENT APPLICATION PUBLICATION
(19) INDIA
(22) Date of filing of Application :08/10/2013
(21) Application No.8157/CHENP/2013 A
(43) Publication Date : 07/11/2014

(54) Title of the invention : EXPRESSION METHOD

(51) International classification :C12N15/67,C12N1/00
(31) Priority Document No :10 2011 007 313.2
(32) Priority Date :13/04/2011
(33) Name of priority country :Germany
(86) International Application No :PCT/EP2012/056262
Filing Date :05/04/2012
(87) International Publication No :WO 2012/139964
(61) Patent of Addition to Application Number :NA
Filing Date :NA
(62) Divisional to Application Number :NA
Filing Date :NA

(71)**Name of Applicant :**
1)BASF SE
Address of Applicant :Carl Bosch Strasse 38 67056 Ludwigshafen Germany
(72)**Name of Inventor :**
1)MAKSYM Lukas
2)KNAB Ramona
3)EVERS Stefan
4)MAURER Karl Heinz
5)BONGAERTS Johannes

(57) Abstract :
The aim of the invention is to increase the product yield of protein in microbial fermentation. Said aim is achieved by a method in which in addition to a first expression construct coding for the protein a second expression construct is introduced in a microorganism which second expression construct codes for an auxiliary protease that differs from the protein is proteolytically active and comprises an amino acid sequence which is at least 50% identical to the amino acid sequence provided in SEQ ID NO. 1.

No. of Pages : 33 No. of Claims : 10

(12) PATENT APPLICATION PUBLICATION
(19) INDIA
(22) Date of filing of Application :08/10/2013
(21) Application No.8158/CHENP/2013 A
(43) Publication Date : 07/11/2014

(54) Title of the invention : RECTIFIER OF ALTERNATING CURRENT GENERATOR FOR VEHICLE

(51) International classification :H02M7/06
(31) Priority Document No :NA
(32) Priority Date :NA
(33) Name of priority country :NA
(86) International Application No :PCT/JP2011/071821
Filing Date :26/09/2011
(87) International Publication No :WO 2013/046289
(61) Patent of Addition to Application Number :NA
Filing Date :NA
(62) Divisional to Application Number :NA
Filing Date :NA

(71)**Name of Applicant :**
1)Mitsubishi Electric Corporation
Address of Applicant :7 3 Marunouchi 2 chome Chiyoda ku Tokyo 1008310 Japan
(72)**Name of Inventor :**
1)IMAGAWA Seisaku

(57) Abstract :
A rectifier (2) for full wave rectification of an output of an alternating current generator (1) for a vehicle wherein Schottky barrier diodes are used as constituent rectifying semiconductor devices (201 202) of the rectifier (2) said Schottky barrier diodes having the characteristics of a low forward voltage drop for a forward current and a low reverse leakage current.

No. of Pages : 16 No. of Claims : 3

(12) PATENT APPLICATION PUBLICATION
(19) INDIA
(22) Date of filing of Application :15/10/2013
(21) Application No.8358/CHENP/2013 A
(43) Publication Date : 07/11/2014

(54) Title of the invention : SPATIALLY VARYING FLICKER DETECTION

(51) International classification :H04N5/217,H04N5/357
(31) Priority Document No :13/081144
(32) Priority Date :06/04/2011
(33) Name of priority country :U.S.A.
(86) International Application No :PCT/US2012/032057
Filing Date :04/04/2012
(87) International Publication No :WO 2012/138687
(61) Patent of Addition to Application Number :NA
Filing Date :NA
(62) Divisional to Application Number :NA
Filing Date :NA

(71)**Name of Applicant :**
1)PELCO INC.
Address of Applicant :3500 Pelco Way Clovis California 93612 U.S.A.
(72)**Name of Inventor :**
1)TRUMBO Matthew L.

(57) Abstract :
An imaging system includes: an image module configured to produce image frames at a frame rate F the image module being configured to capture first and second portions of each of the image frames at different times; a frequency determination module communicatively coupled to the image module configured to determine frequency components associated with the first and second portions over a plurality N of the image frames; and a flicker analysis module communicatively coupled to the frequency determination module configured to determine whether any of the frequency components of the first and second portions are indicative of perceptible flicker.

No. of Pages : 28 No. of Claims : 17

(12) PATENT APPLICATION PUBLICATION
(19) INDIA
(22) Date of filing of Application :02/10/2013
(21) Application No.7973/CHENP/2013 A
(43) Publication Date : 07/11/2014

(54) Title of the invention : INTERMEDIATE FOR SYNTHESIZING CASPOFUNGIN AND PREPARATION METHOD THEREFOR

(51) International classification :C07K7/56,C07K1/06,A61K38/12
(31) Priority Document No :201110107633.9
(32) Priority Date :28/04/2011
(33) Name of priority country :China
(86) International Application No :PCT/CN2012/072714
Filing Date :21/03/2012
(87) International Publication No :WO 2012/146099
(61) Patent of Addition to Application Number :NA
Filing Date :NA
(62) Divisional to Application Number :NA
Filing Date :NA

(71)**Name of Applicant :**
1)UNITRIS BIOPHARMA CO. LTD
Address of Applicant :399 Cailun Road Zhangjiang Hi Tech Park Pudong Shanghai 201203 China
(72)**Name of Inventor :**
1)ZHANG Fuyao
2)SHEN Xiaoming
3)HU Gaoqiang
4)SUN Piaoyang

(57) Abstract :
The present invention relates to an intermediate as represented in formula (I) for synthesizing caspofungin and preparation method therefor. The intermediate enables efficient preparation of caspofungin.

No. of Pages : 26 No. of Claims : 13

(12) PATENT APPLICATION PUBLICATION
(19) INDIA
(22) Date of filing of Application :03/10/2013
(21) Application No.7976/CHENP/2013 A
(43) Publication Date : 07/11/2014

(54) Title of the invention : POWER DEVICE HAVING ROTATING OUTLET UNIT

(51) International classification :H01R13/46
(31) Priority Document No :NA
(32) Priority Date :NA
(33) Name of priority country :NA
(86) International Application No :PCT/CN2011/071808
Filing Date :15/03/2011
(87) International Publication No :WO 2012/122702
(61) Patent of Addition to Application Number :NA
Filing Date :NA
(62) Divisional to Application Number :NA
Filing Date :NA

(71)**Name of Applicant :**
1)SCHNEIDER ELECTRIC IT CORPORATION
Address of Applicant :132 Fairgrounds Road West Kingston RI 02892 U.S.A.
(72)**Name of Inventor :**
1)BROOKSHIRE Kyle
2)LIU Meng Chang
3)LI Chuanwu

(57) Abstract :
A power device (10) includes a housing (12) a power input interface provided on the housing and a rotating outlet unit (30) coupled to the housing. The rotating outlet unit has a plurality of power outlets (38) to distribute power from the power input interface. The rotating outlet unit is configured to rotate between a first position in which the power outlets are disposed on one side of the housing and a second position in which the power outlets are disposed on another side of the housing. A method for providing power to electrical components is further disclosed.

No. of Pages : 20 No. of Claims : 19

(12) PATENT APPLICATION PUBLICATION
(19) INDIA
(22) Date of filing of Application :03/10/2013
(21) Application No.7977/CHENP/2013 A
(43) Publication Date : 07/11/2014

(54) Title of the invention : SYSTEM AND METHOD FOR OFF LINE UPS

(51) International classification :H02M7/42,H02J9/06
(31) Priority Document No :13/074697
(32) Priority Date :29/03/2011
(33) Name of priority country :U.S.A.
(86) International Application No :PCT/US2012/030914
Filing Date :28/03/2012
(87) International Publication No :WO 2012/135329
(61) Patent of Addition to Application Number :NA
Filing Date :NA
(62) Divisional to Application Number :NA
Filing Date :NA

(71)**Name of Applicant :**
1)SCHNEIDER ELECTRIC IT CORPORATION
Address of Applicant :132 Fairgrounds Road West Kingston RI 02892 U.S.A.
(72)**Name of Inventor :**
1)FANG Sheng Shien

(57) Abstract :
A method of operating an uninterruptible power supply (UPS) includes generating during a portion of an output cycle a substantially sinusoidal output voltage responsive to a plurality of pulse width modulation (PWM) control signals provided to a power conversion circuit of the UPS comparing the output voltage to a reference root mean square (RMS) voltage at each of a plurality of time intervals during the portion of the output cycle calculating a PWM control signal scaling factor based on each of the comparisons to the reference RMS voltage and maintaining the output voltage at substantially the reference RMS voltage by applying the calculated PWM control signal scaling factor to at least one of the plurality of PWM control signals. The method may include detecting that the output voltage has reached a maximum output voltage level and clamping the output voltage to a steady state output voltage reference level.

No. of Pages : 30 No. of Claims : 18

(12) PATENT APPLICATION PUBLICATION
(19) INDIA
(22) Date of filing of Application :15/10/2013
(21) Application No.8343/CHENP/2013 A
(43) Publication Date : 07/11/2014

(54) Title of the invention : CIRCUIT ADAPTED TO SUPPLY A VOLTAGE TO AN ELECTRONIC DEVICE AND USES THEREOF

(51) International classification :H02M1/42
(31) Priority Document No :PA 2011 00299
(32) Priority Date :15/04/2011
(33) Name of priority country :Denmark
(86) International Application No :PCT/DK2012/000038
Filing Date :13/04/2012
(87) International Publication No :WO 2012/139576
(61) Patent of Addition to Application Number :NA
Filing Date :NA
(62) Divisional to Application Number :NA
Filing Date :NA

(71)**Name of Applicant :**
1)MANCIC Milan
Address of Applicant :PRVI Ustanak 24000 Subotica Serbia and Montenegro
2)MˆLLER Nicholas
(72)**Name of Inventor :**
1)MANCIC Milan
2)MˆLLER Nicholas

(57) Abstract :
In a circuit adapted to supply a voltage V an electronic device such as a load or a light source said voltage V is led to a circuit (ACG) that is able to derive a voltage V from V where V V. The circuit consist in a first embodiment of three serial coupled diodes (D1 D2 D3) and two capacitors (C1 C2) and where the capacitor (CI) is coupled in parallel with two of the diodes (D1 D2) and the capacitor (C2) is coupled in parallel with the diodes (D2 D3). In this way an Asymmetric Current Generator (ACG) is provided that from a normal periodic source voltage V can derive two voltages both of which are suitable for a rechargeable battery or a light source. In this way a cost effective voltage in which the voltage required for the electronic device is beneficial for recharging the battery or strengthen the light for a LED light source leading to save in current cost and a fast recharging of the rechargeable battery and gaining light from the light source. The invention also covers uses of the Asymmetric Current Generator (ACG).

No. of Pages : 37 No. of Claims : 21

(12) PATENT APPLICATION PUBLICATION
(19) INDIA
(22) Date of filing of Application :15/10/2013
(21) Application No.8345/CHENP/2013 A
(43) Publication Date : 07/11/2014

(54) Title of the invention : LED LIGHT SOURCE

(51) International classification :H05B33/08
(31) Priority Document No :11160660.4
(32) Priority Date :31/03/2011
(33) Name of priority country :EPO
(86) International Application No :PCT/IB2012/051495
Filing Date :28/03/2012
(87) International Publication No :WO 2012/131602
(61) Patent of Addition to Application Number :NA
Filing Date :NA
(62) Divisional to Application Number :NA
Filing Date :NA

(71)**Name of Applicant :**
1)KONINKLIJKE PHILIPS N.V.
Address of Applicant :High Tech Campus 5 NL 5656 AE Eindhoven Netherlands
(72)**Name of Inventor :**
1)TAO Haimin
2)CREUSEN Martinus Petrus
3)KURT Ralph

(57) Abstract :
LED light source comprising a string of LED loads (LED1 LED4) supplied by a rectified mains voltage. The number of LED loads carrying current is increased as the momentary amplitude of the rectified mains voltage increases and is decreased as the momentary amplitude of the rectified mains voltage decreases. The order in which the LED loads start carrying a current and the order in which the LED loads stop carrying a current is reversed for each half period of the mains.

No. of Pages : 21 No. of Claims : 9

(12) PATENT APPLICATION PUBLICATION
(19) INDIA
(22) Date of filing of Application :01/03/2013
(21) Application No.1683/CHENP/2013 A
(43) Publication Date : 07/11/2014

(54) Title of the invention : POLYPHASE BIODEGRADABLE COMPOSITIONS CONTAINING AT LEAST ONE POLYMER OF VEGETABLE ORIGIN

(51) International classification	:C08L3/02,C08K5/00,C08L67/00
(31) Priority Document No	:MI2010A001525
(32) Priority Date	:06/08/2010
(33) Name of priority country	:Italy
(86) International Application No	:PCT/EP2011/063575
Filing Date	:05/08/2011
(87) International Publication No	:WO 2012/017095
(61) Patent of Addition to Application Number	:NA
Filing Date	:NA
(62) Divisional to Application Number	:NA
Filing Date	:NA

(71)**Name of Applicant :**
1)NOVAMONT S.P.A.
Address of Applicant :Via G. Fauser 8 I 28100 Novara Italy
(72)**Name of Inventor :**
1)CAPUZZI Luigi

(57) Abstract :
Polyphase biodegradable compositions having a good resistance to ageing comprising a continuous phase comprising at least one hydrophobic polyester and at least one dispersed phase of polymer of vegetable origin. The hydrophobic polyester constituting the continuous phase is incompatible with the polymer of vegetable origin. The compositions comprise a plasticiser comprising at least 75% of a mixture of diglycerol, triglycerol and tetraglycerol.

No. of Pages : 15 No. of Claims : 20

(12) PATENT APPLICATION PUBLICATION
(19) INDIA
(22) Date of filing of Application :06/03/2013
(21) Application No.1803/CHENP/2013 A
(43) Publication Date : 07/11/2014

(54) Title of the invention : HIGH SPEED AUTOMATIC FIRE SUPPRESSION SYSTEM AND METHOD

(51) International classification :A62C37/44
(31) Priority Document No :61/372394
(32) Priority Date :10/08/2010
(33) Name of priority country :U.S.A.
(86) International Application No :PCT/US2011/047139
Filing Date :09/08/2011
(87) International Publication No :WO 2012/021552
(61) Patent of Addition to Application Number :NA
Filing Date :NA
(62) Divisional to Application Number :NA
Filing Date :NA

(71)**Name of Applicant :**
1)TYCO FIRE PRODUCTS LP
Address of Applicant :1400 Pennbrook Parkway Lansdale PA 19446 U.S.A.
(72)**Name of Inventor :**
1)FERNSTRUM Marvin B.
2)EHLERS Joshua L.
3)COUNTS Brian L.
4)BIEHL Richard J.
5)HACKL Richard J.
6)KREFT Anthony J.
7)THORELL Marvin D.
8)BEYERL Paul J.

(57) Abstract :
An automatic fire suppressing system is preferably provided onboard a vehicle and is supplied with one or more fire suppressing agents that are discharged in response to detecting a fire threat. Preferred embodiments include high speed valves for discharging the fire suppressing agent(s) optical detectors for detecting and evaluating fire threat conditions and modules for monitoring and controlling the automatic fire suppressing system.

No. of Pages : 30 No. of Claims : 54

(12) PATENT APPLICATION PUBLICATION
(19) INDIA
(22) Date of filing of Application :19/03/2013
(21) Application No.2179/CHENP/2013 A
(43) Publication Date : 07/11/2014

(54) Title of the invention : TREATMENT OF POLYSACCARIDES WITH DIALDEHYDES

(51) International classification :C08B11/20,C08B15/00
(31) Priority Document No :61/385359
(32) Priority Date :22/09/2010
(33) Name of priority country :U.S.A.
(86) International Application No :PCT/US2011/051703
Filing Date :15/09/2011
(87) International Publication No :WO 2012/040024
(61) Patent of Addition to Application Number :NA
Filing Date :NA
(62) Divisional to Application Number :NA
Filing Date :NA

(71)**Name of Applicant :**
1)DOW GLOBAL TECHNOLOGIES LLC
Address of Applicant :2040 Dow Center Midland MI 48674 U.S.A.
(72)**Name of Inventor :**
1)HILD Alexandra
2)SPREHE Matthias
3)ALTMANN Axel
4)ADDEN Roland

(57) Abstract :
A process for treating a polysaccharide with a dialdehyde in the presence of from 10 to 40 weight percent of water based on the total weight of polysaccharide and water is beneficially conducted in a mixing device characterized by a FROUDE number FRw of larger than 11, wherein is the angular frequency in sec 1 and is defined as 2pRPM/60 RPM is the rotational speed of the mixing device in revolutions per minute Rw is the radius of the mixing device in m, and g is the acceleration due to gravity in m/s2.

No. of Pages : 21 No. of Claims : 14

(12) PATENT APPLICATION PUBLICATION
(19) INDIA
(22) Date of filing of Application :20/03/2013
(21) Application No.2231/CHENP/2013 A
(43) Publication Date : 07/11/2014

(54) Title of the invention : FLOW BATTERY SYSTEMS

(51) International classification :H01M8/18,H01M8/02,H01M8/04
(31) Priority Document No :12/868489
(32) Priority Date :25/08/2010
(33) Name of priority country :U.S.A.
(86) International Application No :PCT/US2011/047960
Filing Date :16/08/2011
(87) International Publication No :WO 2012/027161
(61) Patent of Addition to Application Number :NA
Filing Date :NA
(62) Divisional to Application Number :NA
Filing Date :NA

(71)**Name of Applicant :**
1)APPLIED MATERIALS INC.
Address of Applicant :3050 Bowers Avenue Santa Clara CA 95054 U.S.A.
(72)**Name of Inventor :**
1)WILSON Gregory J.
2)HANSON Kyle M.

(57) Abstract :
Embodiments of the invention generally provide for flow battery cells systems containing a plurality of flow battery cells and methods for improving metal plating within the flow battery cell such as by flowing and exposing the catholyte to various types of cathodes. In one embodiment a flow battery cell is provided which includes a cathodic half cell and an anodic half cell separated by an electrolyte membrane wherein the cathodic half cell contains a plurality of cathodic wires extending perpendicular or substantially perpendicular to and within the catholyte pathway and in contact with the catholyte and each of the cathodic wires extends parallel or substantially parallel to each other. In some examples the plurality of cathodic wires may have at least two arrays of cathodic wires each array contains at least one row of cathodic wires and each row extends along the catholyte pathway.

No. of Pages : 75 No. of Claims : 15

(12) PATENT APPLICATION PUBLICATION
(19) INDIA
(22) Date of filing of Application :17/10/2013
(21) Application No.8393/CHENP/2013 A
(43) Publication Date : 07/11/2014

(54) Title of the invention : SEMICONDUCTOR NANOPARTICLE CONTAINING MATERIALS AND LIGHT EMITTING DEVICES INCORPORATING THE SAME

(51) International classification :H01L33/50
(31) Priority Document No :1109065.1
(32) Priority Date :31/05/2011
(33) Name of priority country :U.K.
(86) International Application No :PCT/GB2012/051217
Filing Date :31/05/2012
(87) International Publication No :WO 2012/164283
(61) Patent of Addition to Application Number :NA
Filing Date :NA
(62) Divisional to Application Number :NA
Filing Date :NA

(71)**Name of Applicant :**
1)NANOCO TECHNOLOGIES LIMITED
Address of Applicant :46 Grafton Street Manchester Greater Manchester M13 9NT U.K.
(72)**Name of Inventor :**
1)HARRIS James
2)NAASANI Imad
3)PICKETT Nigel

(57) Abstract :
The present invention provides a light emitting device cap configured for location on a light emitting device comprising a primary light source. The cap defines a well region within which is received a population of semiconductor nanoparticles such that the semiconductor nanoparticles are in optical communication with the primary light source of the light emitting device when the cap is located on the light emitting device. There is further provided a light emitting device comprising a primary light source and such a cap as well as methods for fabricating such a cap and device.

No. of Pages : 40 No. of Claims : 22

(12) PATENT APPLICATION PUBLICATION
(19) INDIA
(22) Date of filing of Application :27/03/2013
(21) Application No.2399/CHENP/2013 A
(43) Publication Date : 07/11/2014

(54) Title of the invention : METHOD AND APPARATUS FOR PROTOCOL EVENT MANAGEMENT

(51) International classification :H04L12/24
(31) Priority Document No :12/894733
(32) Priority Date :30/09/2010
(33) Name of priority country :U.S.A.
(86) International Application No :PCT/US2011/052505
Filing Date :21/09/2011
(87) International Publication No :WO 2012/050768
(61) Patent of Addition to Application Number :NA
Filing Date :NA
(62) Divisional to Application Number :NA
Filing Date :NA

(71)**Name of Applicant :**
1)ALCATEL LUCENT
Address of Applicant :3 Avenue Octave Gneral 75007 Paris France
(72)**Name of Inventor :**
1)QIU Lei
2)SOPROVICH Greg F.
3)ROKUI Reza

(57) Abstract :
A protocol event management capability is depicted and described herein. The protocol event management capability is provided by enhancing current network element behavior and coupling the enhancements to the management system managing the network element. A first enhancement is use of protocol event capture in which the network element logs protocol events locally at the network element. A protocol event logged for an event related to a protocol includes a description of the event related to the protocol and an association of the event related to the protocol to at least one object impacted by the event related to the protocol. The logged protocol events may be provided to the management system in any suitable manner. A second enhancement is use of protocol event suppression in which the network element suppresses protocol events using protocol event suppression rules and the management system reconstructs the suppressed protocol events using knowledge of the protocol event suppression rules applied at the network element. The protocol event capture function and protocol event suppression function may be used independently or in combination.

No. of Pages : 41 No. of Claims : 10

(12) PATENT APPLICATION PUBLICATION
(19) INDIA
(22) Date of filing of Application :03/01/2013
(21) Application No.74/CHENP/2013 A
(43) Publication Date : 07/11/2014

(54) Title of the invention : EYEGLASS LENS EVALUATION METHOD EYEGLASS LENS DESIGN METHOD EYEGLASS LENS MANUFACTURING METHOD EYEGLASS LENS MANUFACTURING SYSTEM AND EYEGLASS LENS

(51) International classification :G02C13/00,G02C7/02
(31) Priority Document No :2010167752
(32) Priority Date :27/07/2010
(33) Name of priority country :Japan
(86) International Application No :PCT/JP2011/066715
Filing Date :22/07/2011
(87) International Publication No :WO 2012/014810
(61) Patent of Addition to Application Number :NA
Filing Date :NA
(62) Divisional to Application Number :NA
Filing Date :NA

(71)**Name of Applicant :**
1)HOYA CORPORATION
Address of Applicant :2 7 5 Naka Ochiai Shinjuku ku Tokyo 1618525 Japan
(72)**Name of Inventor :**
1)YAMAKAJI Tetsuma

(57) Abstract :
An evaluation method for evaluating custom made eyeglass lenses using a visual fatigue function wherein the visual fatigue function includes as a factor a measured value involving at least the positive relative convergence and/or negative relative convergence among the positive relative convergence negative relative convergence positive relative accommodation negative relative accommodation and vertical fusional vergence.

No. of Pages : 113 No. of Claims : 12

(12) PATENT APPLICATION PUBLICATION
(19) INDIA
(22) Date of filing of Application :17/10/2013
(21) Application No.8400/CHENP/2013 A
(43) Publication Date : 07/11/2014

(54) Title of the invention : COMPOSITION AND METHOD FOR ENHANCED HYDROCARBON RECOVERY

(51) International classification :C09K8/584
(31) Priority Document No :11167867.8
(32) Priority Date :27/05/2011
(33) Name of priority country :EPO
(86) International Application No :PCT/EP2012/059891
Filing Date :25/05/2012
(87) International Publication No :WO 2012/163852
(61) Patent of Addition to Application Number :NA
Filing Date :NA
(62) Divisional to Application Number :NA
Filing Date :NA

(71)**Name of Applicant :**
1)SHELL INTERNATIONALE RESEARCH MAATSCHAPPIJ B.V.
Address of Applicant :Carel van Bylandtlaan 30 NL 2596 HR The Hague Netherlands
(72)**Name of Inventor :**
1)RANEY Kirk Herbert
2)NAVARRETE Reinaldo Conrado
3)DIRKZWAGER Hendrik
4)BARNES Julian Richard
5)MOENE Robert

(57) Abstract :
The invention relates to a hydrocarbon recovery composition comprising an anionic surfactant wherein said composition is in the solid state and to a shaped article comprising said composition. Preferably said composition is in the form of a powder. Further the invention relates to a process for treating a hydrocarbon containing formation comprising the steps of a) transporting said composition or shaped article to the location of the hydrocarbon containing formation; b) dissolving said composition or shaped article in water thereby forming an aqueous fluid containing the hydrocarbon recovery composition; c) providing the aqueous fluid containing the hydrocarbon recovery composition to at least a portion of the hydrocarbon containing formation; and d) allowing the hydrocarbon recovery composition to interact with the hydrocarbons in the hydrocarbon containing formation.

No. of Pages : 71 No. of Claims : 8

(12) PATENT APPLICATION PUBLICATION
(19) INDIA
(22) Date of filing of Application :17/10/2013
(21) Application No.8401/CHENP/2013 A
(43) Publication Date : 07/11/2014

(54) Title of the invention : AMINOPYRIMIDINES AS SYK INHIBITORS

(51) International classification :A01N43/54,A61K31/505
(31) Priority Document No :61/484418
(32) Priority Date :10/05/2011
(33) Name of priority country :U.S.A.
(86) International Application No :PCT/US2012/036423
Filing Date :04/05/2012
(87) International Publication No :WO 2012/154519
(61) Patent of Addition to Application Number :NA
Filing Date :NA
(62) Divisional to Application Number :NA
Filing Date :NA

(71)**Name of Applicant :**
1)MERCK SHARP & DOHME CORP.
Address of Applicant :126 East Lincoln Avenue Rahway New Jersey 07065 0907 U.S.A.
(72)**Name of Inventor :**
1)ALTMAN Michael D.
2)CHILDERS Kaleen Konrad
3)DI FRANCESCO Maria Emilia
4)ELLIS John Michael
5)FISCHER Christian
6)GRIMM Jonathan
7)HAIDLE Andrew M.
8)KATTAR Solomon D.
9)NORTHRUP Alan B.
10)OTTE Ryan D.
11)PETROCCHI Alessia
12)SCHELL Adam J.
13)ZHOU Hua

(57) Abstract :
The present invention provides novel pyrimidine amines of formula I which are potent inhibitors of spleen tyrosine kinase and are useful in the treatment and prevention of diseases mediated by said enzyme such as asthma COPD rheumatoid arthritis and cancer.

No. of Pages : 118 No. of Claims : 14

(12) PATENT APPLICATION PUBLICATION
(19) INDIA
(22) Date of filing of Application :18/10/2013
(21) Application No.8402/CHENP/2013 A
(43) Publication Date : 07/11/2014

(54) Title of the invention : MODULATION OF SIGNAL TRANSDUCER AND ACTIVATOR OF TRANSCRIPTION 3 (STAT3) EXPRESSION

(51) International classification :C07H21/04,C12N15/11
(31) Priority Document No :61/471001
(32) Priority Date :01/04/2011
(33) Name of priority country :U.S.A.
(86) International Application No :PCT/US2012/031642
Filing Date :30/03/2012
(87) International Publication No :WO 2012/135736
(61) Patent of Addition to Application Number :NA
Filing Date :NA
(62) Divisional to Application Number :NA
Filing Date :NA

(71)**Name of Applicant :**
1)ISIS PHARMACEUTICALS INC.
Address of Applicant :2855 Gazelle Court Carlsbad CA 92010 U.S.A.
(72)**Name of Inventor :**
1)SWAYZE Eric E.
2)FREIER Susan M.
3)MACLEOD Robert A.
4)KIM Youngsoo

(57) Abstract :
Disclosed herein are antisense compounds and methods for decreasing STAT3 mRNA and protein expression. Such methods compounds and compositions are useful to treat prevent or ameliorate hyperproliferative diseases.

No. of Pages : 238 No. of Claims : 76

(12) PATENT APPLICATION PUBLICATION
(19) INDIA
(22) Date of filing of Application :10/10/2013
(21) Application No.8238/CHENP/2013 A
(43) Publication Date : 07/11/2014

(54) Title of the invention : APPARATUSES AND METHODS FOR ANALYZING IMAGE GRADINGS

(51) International classification :G06T5/50
(31) Priority Document No :11159503.9
(32) Priority Date :24/03/2011
(33) Name of priority country :EPO
(86) International Application No :PCT/IB2012/051296
Filing Date :19/03/2012
(87) International Publication No :WO 2012/127401
(61) Patent of Addition to Application Number :NA
Filing Date :NA
(62) Divisional to Application Number :NA
Filing Date :NA

(71)**Name of Applicant :**
1)KONINKLIJKE PHILIPS N.V.
Address of Applicant :High Tech Campus 5 NL 5656 AE Eindhoven Netherlands
(72)**Name of Inventor :**
1)MUIJS Remco Theodorus Johannes
2)MERTENS Mark Jozef Willem
3)BRULS Wilhelmus Hendrikus Alfonsus
4)DAMKAT Chris
5)HAMMER Martin
6)KWISTHOUT Cornelis Wilhelmus

(57) Abstract :
The method of analyzing a difference of at least two gradings of an image on the basis of: obtaining a first graded picture (LDR) with a first luminance dynamic range; obtaining data encoding a grading of a second graded picture (HDR) with a second luminance dynamic range different from the first luminance dynamic range; determining a grading difference data structure (DATGRAD) on the basis of at least the data encoding the grading of the second graded picture (HDR) allows more intelligently adaptive encoding of the imaged scenes and consequently also better use of those pictures such as higher quality rendering under various rendering scenarios.

No. of Pages : 40 No. of Claims : 21

(12) PATENT APPLICATION PUBLICATION
(19) INDIA
(22) Date of filing of Application :10/10/2013
(21) Application No.8239/CHENP/2013 A
(43) Publication Date : 07/11/2014

(54) Title of the invention : PERSONAL ALARM SYSTEM

(51) International classification :G04G11/00
(31) Priority Document No :61/467155
(32) Priority Date :24/03/2011
(33) Name of priority country :U.S.A.
(86) International Application No :PCT/IB2012/051240
Filing Date :15/03/2012
(87) International Publication No :WO 2012/127374
(61) Patent of Addition to Application Number :NA
Filing Date :NA
(62) Divisional to Application Number :NA
Filing Date :NA

(71)**Name of Applicant :**
1)KONINKLIJKE PHILIPS N.V.
Address of Applicant :High Tech Campus 5 NL 5656 AE Eindhoven Netherlands
(72)**Name of Inventor :**
1)BALOA WELZIEN Leonardo Alberto
2)COLBAUGH Michael Edward

(57) Abstract :
A personal alarm system that only wakes up the intended user includes an appliance worn near the eye. The personal alarm system emits radiation of a particular wavelength onto the eye or eyelid of the intended user and a predetermined moment to wake up the intended user.

No. of Pages : 27 No. of Claims : 18

(12) PATENT APPLICATION PUBLICATION
(19) INDIA
(22) Date of filing of Application :18/10/2013
(21) Application No.8426/CHENP/2013 A
(43) Publication Date : 07/11/2014

(54) Title of the invention : TWO PART ELECTROTRANSPORT DEVICE

(51) International classification :A61N1/30,A61M37/00,A61J1/05
(31) Priority Document No :61/470352
(32) Priority Date :31/03/2011
(33) Name of priority country :U.S.A.
(86) International Application No :PCT/US2012/028400
Filing Date :09/03/2012
(87) International Publication No :WO 2012/134767
(61) Patent of Addition to Application Number :NA
Filing Date :NA
(62) Divisional to Application Number :NA
Filing Date :NA

(71)**Name of Applicant :**
1)INCLINE THERAPEUTICS INC.
Address of Applicant :900 Saginaw Drive Suite 200 Redwood City CA 94063 U.S.A.
2)ALZA CORPORATION
(72)**Name of Inventor :**
1)NETZEL Zita S.
2)LEMKE John
3)SEWARD David
4)READ Brian W.
5)WHITE Bradley E.
6)CHEN Corinna X.
7)HAYTER Paul

(57) Abstract :
A switch operated therapeutic agent delivery device is described. The device comprises two parts which are assembled by a user prior to use. A first part contains a power supply and circuitry for the device; and a second part comprises electrodes and reservoirs containing the therapeutic agent to be delivered. The action of combining the two parts of the device causes the two parts to be irreversibly coupled together completes an electrical connection between the two parts and closes one or more switches thereby connecting a power source such as a battery into the device s circuitry thereby powering the device on so that it is ready for use. The device can then be attached to a patient who can operate the device by pressing a button in a proper sequence.

No. of Pages : 42 No. of Claims : 30

(12) PATENT APPLICATION PUBLICATION
(19) INDIA
(22) Date of filing of Application :18/10/2013
(21) Application No.8427/CHENP/2013 A
(43) Publication Date : 07/11/2014

(54) Title of the invention : IN WHEEL MOTOR APPARATUS

(51) International classification :B60K7/00,B60G9/04
(31) Priority Document No :2011078416
(32) Priority Date :31/03/2011
(33) Name of priority country :Japan
(86) International Application No :PCT/JP2012/057632
Filing Date :23/03/2012
(87) International Publication No :WO 2012/133245
(61) Patent of Addition to Application Number :NA
Filing Date :NA
(62) Divisional to Application Number :NA
Filing Date :NA

(71)**Name of Applicant :**
1)AISIN SEIKI KABUSHIKI KAISHA
Address of Applicant :1 Asahi machi 2 chome Kariya shi Aichi 4488650 Japan
(72)**Name of Inventor :**
1)YAMANAKA Toshihiko
2)MORI Kyosuke
3)TAHARA Yasuaki
4)KAJIKAWA Atsushi

(57) Abstract :
Provided is an in wheel motor apparatus which without entailing increased complexity or major changes to the configuration of a suspension mechanism can be disposed with a simple suspension configuration and minimize changes in vehicle height caused by drive power. A wheel with a rotational shaft extending in the traverse direction of a vehicle body and an in wheel motor mounted in the wheel are suspended by a suspension mechanism that is attached to the vehicle body such that movement in the traverse direction is restricted. The in wheel motor is mounted in the wheel such that the rotational shaft axis of the in wheel motor is either orthogonal to oblique to or offset from the rotational shaft axis of the wheel.

No. of Pages : 26 No. of Claims : 9

(12) PATENT APPLICATION PUBLICATION
(19) INDIA
(22) Date of filing of Application :18/10/2013
(21) Application No.8432/CHENP/2013 A
(43) Publication Date : 07/11/2014

(54) Title of the invention : WIRELESS POWER TRANSMITTER TUNING

(51) International classification :H04B5/00,H02J5/00,H02J17/00
(31) Priority Document No :61/477109
(32) Priority Date :19/04/2011
(33) Name of priority country :U.S.A.
(86) International Application No :PCT/US2012/033956
Filing Date :17/04/2012
(87) International Publication No :WO 2012/145327
(61) Patent of Addition to Application Number :NA
Filing Date :NA
(62) Divisional to Application Number :NA
Filing Date :NA

(71)**Name of Applicant :**
1)QUALCOMM INCORPORATED
Address of Applicant :5775 Morehouse Drive San Diego California 92121 U.S.A.
(72)**Name of Inventor :**
1)LOW Zhen Ning
2)WHEATLEY III Charles Edward
3)KASTURI Sreenivas

(57) Abstract :
This disclosure provides systems methods and apparatus for tuning a wireless power transmitter (1404). In one aspect an apparatus (1406) configured to wirelessly provide power to a load is provided. The apparatus (1406) includes a transmit circuit (1450) including a transmit coil (1414). The transmit circuit (1450) is configured to wirelessly provide power to the load. The transmit coil (1414) is configured to resonate at a resonant frequency. The transmit circuit (1450) has a reactance. The apparatus (1406) further includes a detection circuit (1480) configured to detect a change in the resonant frequency while providing power to the load. The apparatus (1406) further includes a tuning circuit (852) configured to adjust the reactance based on the change.

No. of Pages : 50 No. of Claims : 31

(12) PATENT APPLICATION PUBLICATION
(19) INDIA
(22) Date of filing of Application :04/10/2013
(21) Application No.8035/CHENP/2013 A
(43) Publication Date : 07/11/2014

(54) Title of the invention : 1 3 OXAZINES AS BACE1 AND/OR BACE2 INHIBITORS

(51) International classification	:C07D265/08,C07D413/12,A61K31/5355
(31) Priority Document No	:11161803.9
(32) Priority Date	:11/04/2011
(33) Name of priority country	:EPO
(86) International Application No	:PCT/EP2012/056408
Filing Date	:10/04/2012
(87) International Publication No	:WO 2012/139993
(61) Patent of Addition to Application Number	:NA
Filing Date	:NA
(62) Divisional to Application Number	:NA
Filing Date	:NA

(71)**Name of Applicant :**
1)F. HOFFMANN LA ROCHE AG
Address of Applicant :Grenzacherstrasse 124 CH 4070 Basel Switzerland
2)SIENA BIOTECH S.P.A
(72)**Name of Inventor :**
1)HILPERT Hans
2)WOSTL Wolfgang

(57) Abstract :
The present invention provides 4 (3 Amino phenyl) 5 6 dihydro 4H [1 3]oxazin 2 ylamines of formula (I) having BACE1 and/or BACE2 inhibitory activity their manufacture pharmaceutical compositions containing them and their use as therapeutically active substances. The active compounds of the present invention are useful in the therapeutic and/or prophylactic treatment of e.g. Alzheimer s disease and type 2 diabetes.

No. of Pages : 102 No. of Claims : 31

(12) PATENT APPLICATION PUBLICATION
(19) INDIA
(22) Date of filing of Application :04/10/2013
(21) Application No.8036/CHENP/2013 A
(43) Publication Date : 07/11/2014

(54) Title of the invention : DOWNHOLE TUBING CUTTER TOOL

(51) International classification :E21B29/00
(31) Priority Document No :11168242.3
(32) Priority Date :31/05/2011
(33) Name of priority country :EPO
(86) International Application No :PCT/EP2012/060255
Filing Date :31/05/2012
(87) International Publication No :WO 2012/164023
(61) Patent of Addition to Application Number :NA
Filing Date :NA
(62) Divisional to Application Number :NA
Filing Date :NA

(71)**Name of Applicant :**
1)WELLTEC A/S
Address of Applicant :Gydevang 25 DK 3450 Aller¸d Denmark
(72)**Name of Inventor :**
1)HALLUNDB†K J¸rgen

(57) Abstract :
The present invention relates to a downhole tubing cutter tool for submerging into a casing in a wellbore and separating an upper part of the casing from a lower part of the casing by cutting the casing from within the tool extending in a longitudinal direction comprising a tool housing having a first and a second housing part a cutting arm which is pivotably connected with the first housing part and has a cutting edge in a first end said arm being movable between a retracted position and a projected position in relation to the tool housing an arm activation assembly for moving the cutting arm between the retracted position and the projected position and a rotatable shaft arranged in the second housing part and connected with the first housing part for rotating the cutting arm.

No. of Pages : 31 No. of Claims : 31

(12) PATENT APPLICATION PUBLICATION
(19) INDIA
(22) Date of filing of Application :18/10/2013
(21) Application No.8417/CHENP/2013 A
(43) Publication Date : 07/11/2014

(54) Title of the invention : AN APPARATUS WITH A NEAR FIELD COUPLING MEMBER AND METHOD FOR COMMUNICATION

(51) International classification :H01Q21/28,H01Q1/52,H04B1/00
(31) Priority Document No :NA
(32) Priority Date :NA
(33) Name of priority country :NA
(86) International Application No :PCT/FI2011/050245
Filing Date :24/03/2011
(87) International Publication No :WO 2012/127097
(61) Patent of Addition to Application Number :NA
Filing Date :NA
(62) Divisional to Application Number :NA
Filing Date :NA

(71)**Name of Applicant :**
1)NOKIA CORPORATION
Address of Applicant :Keilalahdentie 4 FI 02150 Espoo Finland
(72)**Name of Inventor :**
1)JOUANLANNE Cyril
2)SOE Rune

(57) Abstract :
An apparatus comprising: a ground member (22) including an edge (32); a near field coupling member (30) configured to electromagnetically couple with other coupling members (41) external to the apparatus (12) and being configured to receive signals from and/or provide signals to radio frequency circuitry (14) at least a first portion (44) of the one or more loops being positioned adjacent or at the edge (32) of the ground member the near field coupling member (30) including one or more loops defining an aperture (42) the near field coupling member being configured to receive one or more antennas (18) within the aperture (42) of the one or more loops. The first portion (44) of the one or more loops may be positioned outside of the edge of the ground member and be separated from the edge by a first gap (46). The apparatus may further comprise one or more decoupling members (48) configured to reduce interterence between the near field coupling member and the one or more antennas (18).

No. of Pages : 22 No. of Claims : 22

(12) PATENT APPLICATION PUBLICATION
(19) INDIA
(22) Date of filing of Application :18/10/2013
(21) Application No.8423/CHENP/2013 A
(43) Publication Date : 07/11/2014

(54) Title of the invention : SEMICONDUCTING POLYMERS

(51) International classification :C08G61/12,C08L65/00,H01L51/30
(31) Priority Document No :61/517205
(32) Priority Date :15/04/2011
(33) Name of priority country :U.S.A.
(86) International Application No :PCT/US2012/033601
Filing Date :13/04/2012
(87) International Publication No :WO 2012/142469
(61) Patent of Addition to Application Number :NA
Filing Date :NA
(62) Divisional to Application Number :NA
Filing Date :NA

(71)**Name of Applicant :**
1)UNIVERSITY OF CHICAGO
Address of Applicant :5801 South Ellis Avenue Chicago IL 60637 U.S.A.
(72)**Name of Inventor :**
1)YU Luping
2)SON Hae Jung

(57) Abstract :
Novel semiconducting photovoltaic polymers with conjugated units that provide improved solar conversion efficiency that can be used in electro optical and electric devices. The polymers exhibit increased solar conversion efficiency in solar devices.

No. of Pages : 60 No. of Claims : 39

(12) PATENT APPLICATION PUBLICATION
(19) INDIA
(22) Date of filing of Application :18/10/2013
(21) Application No.8424/CHENP/2013 A
(43) Publication Date : 07/11/2014

(54) Title of the invention : DEVICE AND METHOD FOR QUICK CLOSING OF AN ELECTRIC CIRCUIT AND A USE OF THE DEVICE

(51) International classification :H01T2/02
(31) Priority Document No :11164925.7
(32) Priority Date :05/05/2011
(33) Name of priority country :EPO
(86) International Application No :PCT/EP2012/058179
Filing Date :04/05/2012
(87) International Publication No :WO 2012/150313
(61) Patent of Addition to Application Number :NA
Filing Date :NA
(62) Divisional to Application Number :NA
Filing Date :NA

(71)**Name of Applicant :**
1)ABB RESEARCH LTD
Address of Applicant :Affolternstrasse 44 CH 8050 Z¼rich Switzerland
(72)**Name of Inventor :**
1)JEPPSSON Ola
2)PAULSSON Lars

(57) Abstract :
The invention relates to a device for quick closing of an electric circuit having a main spark gap with main electrodes and a triggering device. The triggering device has an auxiliary spark gap with auxiliary electrodes for igniting an arc in the main spark gap. The auxiliary electrodes are shielded from the main spark gap by a shielding unit (4) having channel means (9 10) extending therethrough from an auxiliary spark gap facing side (11) to a main spark gap facing side (12) of the shielding unit (4). According to the invention device further includes a nozzle (6) with a first end being most close to the auxiliary spark gap and a second end most close to the main spark gap. The first end has an inlet opening (7) that is in connection with the channel means (9 10) and the second end has an outlet opening (8). The invention also relates to a corresponding method and to a use of the device.

No. of Pages : 18 No. of Claims : 17

(12) PATENT APPLICATION PUBLICATION
(19) INDIA
(22) Date of filing of Application :04/10/2013
(21) Application No.8069/CHENP/2013 A
(43) Publication Date : 07/11/2014

(54) Title of the invention : PATH LENGTH SELECTOR

(51) International classification :G06Q50/00,G06Q30/00
(31) Priority Document No :13/084549
(32) Priority Date :11/04/2011
(33) Name of priority country :U.S.A.
(86) International Application No :PCT/US2011/053838
Filing Date :29/09/2011
(87) International Publication No :WO 2012/141730
(61) Patent of Addition to Application Number :NA
Filing Date :NA
(62) Divisional to Application Number :NA
Filing Date :NA

(71)**Name of Applicant :**
1)GOOGLE INC.
Address of Applicant :1600 Amphitheatre Parkway Mountain View California 94043 U.S.A.
(72)**Name of Inventor :**
1)CHOC Theodore Nicholas
2)CAI Hongxu

(57) Abstract :
Methods systems and apparatuses including computer programs encoded on a computer storage medium for providing data related to conversion paths. In one aspect conversion path data for a plurality of conversion paths is received. The conversion path data includes a path length measure for each conversion path in the plurality of conversion paths. One or more groups of paths length measures and an aggregate performance measure for each path length measure group are determined. The aggregate performance measure can be a total number of conversions. Instructions for displaying the list of the one or more groups of path length measures corresponding aggregate measures and a graphical representation based on the one or more groups and aggregate performance are provided. The graphical representation can be a histogram.

No. of Pages : 59 No. of Claims : 20

(12) PATENT APPLICATION PUBLICATION
(19) INDIA
(22) Date of filing of Application :04/10/2013
(21) Application No.8070/CHENP/2013 A
(43) Publication Date : 07/11/2014

(54) Title of the invention : AGGREGATION OF CONVERSION PATHS UTILIZING USER INTERACTION GROUPING

(51) International classification :G06Q50/00,G06Q10/00,G06Q30/00
(31) Priority Document No :13/084537
(32) Priority Date :11/04/2011
(33) Name of priority country :U.S.A.
(86) International Application No :PCT/US2011/054065
Filing Date :29/09/2011
(87) International Publication No :WO 2012/141733
(61) Patent of Addition to Application Number :NA
Filing Date :NA
(62) Divisional to Application Number :NA
Filing Date :NA

(71)**Name of Applicant :**
1)GOOGLE INC.
Address of Applicant :1600 Amphitheatre Parkway Mountain View California 94043 U.S.A.
(72)**Name of Inventor :**
1)JIA Ying Hua
2)HSIAO Sissie Ling le
3)CHOC Theodore Nicholas
4)CAI Hongxu
5)SECKAR Nicholas

(57) Abstract :
Methods systems and apparatuses including computer programs encoded on computer readable media for aggregating conversion paths utilizing user interaction grouping. In one aspect information regarding a plurality of conversion paths is received. Each conversion path includes one or more user interactions that include a plurality of dimensional data. A sorted list of grouping definitions that includes one or more group rules is received and the conversion paths are converted into group paths based upon the one or more group rules. Each group path includes one or more group elements corresponding to each user interaction of a corresponding conversion path. The plurality of group paths are aggregated based upon the number and order of group elements within each group path. Information regarding the aggregated group paths can then be provided for example through a report.

No. of Pages : 53 No. of Claims : 20

(12) PATENT APPLICATION PUBLICATION
(19) INDIA
(22) Date of filing of Application :12/10/2013
(21) Application No.8269/CHENP/2013 A
(43) Publication Date : 07/11/2014

(54) Title of the invention : SYSTEM FOR HEATING HEAT TRANSFER OIL USING BOILER FLUE GAS WASTE HEAT

(51) International classification :F24H7/00
(31) Priority Document No :201120069052.6
(32) Priority Date :16/03/2011
(33) Name of priority country :China
(86) International Application No :PCT/CN2011/080030
Filing Date :22/09/2011
(87) International Publication No :WO 2012/122785
(61) Patent of Addition to Application Number :NA
Filing Date :NA
(62) Divisional to Application Number :NA
Filing Date :NA

(71)**Name of Applicant :**
1)SHANGHAI FUBO EP EQUIPMENT CO. LTD.
Address of Applicant :Room B 3rd Floor No.3 Building No.1151 Lianxi Road Pudong District Shanghai 201204 China
(72)**Name of Inventor :**
1)QIAN Xuelve
2)LIU Bing

(57) Abstract :
A system for heating heat transfer oil using boiler flue gas waste heat comprising an economizer (3) and an air pre heater (4) disposed in the flue (1) according to the direction of the smoke flow; and further comprises a heat transfer oil heater (2) disposed in front of the economizer (3) in the flue (1) the heat transfer oil heater (2) is connected to a heat using device (19) through a circulation pipe and a circulation pump (12) is disposed on the circulation pipe. The system for heating heat transfer oil using boiler flue gas waste heat of the present invention exploits flue gas waste heat reduces the exhaust gas temperature of the boiler utilizes recycled heat to heat a heat carrier and can be used in numerous industries.

No. of Pages : 17 No. of Claims : 9

(12) PATENT APPLICATION PUBLICATION
(19) INDIA
(22) Date of filing of Application :22/10/2013
(21) Application No.8451/CHENP/2013 A
(43) Publication Date : 07/11/2014

(54) Title of the invention : GROUND STABILISING DEVICE

(51) International classification :F16G11/10,E02D5/80
(31) Priority Document No :1106118.1
(32) Priority Date :12/04/2011
(33) Name of priority country :U.K.
(86) International Application No :PCT/GB2012/000302
Filing Date :02/04/2012
(87) International Publication No :WO 2012/140393
(61) Patent of Addition to Application Number :NA
Filing Date :NA
(62) Divisional to Application Number :NA
Filing Date :NA

(71)**Name of Applicant :**
1)GRIPPLE LIMITED
Address of Applicant :The Old West Gun Works Savile Street East Sheffield S47uq South Yorkshire U.K.
(72)**Name of Inventor :**
1)FERREIRA Andre
2)CLARKE Neil

(57) Abstract :
A ground stabilising device (10) comprises a securing arrangement (16) and a load spreading arrangement (18) on the securing arrangement. The securing arrangement defines a through passage (40) for an elongate article (12). The securing arrangement comprises a guide member (54) extending towards the passage and a clamping assembly (38). The clamping assembly is movable along the guide member towards the passage to clamp the elongate article in the passage and secure the elongate article to the ground stabilising device.

No. of Pages : 23 No. of Claims : 34

(12) PATENT APPLICATION PUBLICATION
(19) INDIA
(22) Date of filing of Application :11/10/2013

(21) Application No.8258/CHENP/2013 A
(43) Publication Date : 07/11/2014

(54) Title of the invention : A DEVICE

(51) International classification :A61B17/00,A61B17/06,A61M27/00
(31) Priority Document No :1104686.9
(32) Priority Date :21/03/2011
(33) Name of priority country :U.K.
(86) International Application No :PCT/GB2011/051810
Filing Date :26/09/2011
(87) International Publication No :WO 2011/151659
(61) Patent of Addition to Application Number :NA
Filing Date :NA
(62) Divisional to Application Number :NA
Filing Date :NA

(71)**Name of Applicant :**
1)KEIGHLEYCOLO LTD
Address of Applicant :Whalebone Cottage Vicarage Hill Tanworth in Arden Solihull West Midlands B94 5AN U.K.
(72)**Name of Inventor :**
1)KEIGHLEY Michael Robert Burch

(57) Abstract :
The present invention relates to devices and related methods for treating fistulas such as anal or recto vaginal fistulas in particular by the use of a seton to secure a tissue growth promoter such as a growth factor and/or fibrin. The various devices are particularly suitable for positioning tissue growth promoters securely within a fistula. Thus one device comprises a seton and a tissue growth promoter. Further related aspects of the invention include devices comprising an enclosure provided inbetween portions of a seton devices comprising a seton and a plurality of holes for enabling the device to be sutured to tissue devices comprising a probe and a seton that are releasably connectable end to end devices comprising an attachment device to secure the ends of a seton and devices comprising a fistula plug adapted to be secured to a seton.

No. of Pages : 60 No. of Claims : 42

(12) PATENT APPLICATION PUBLICATION
(19) INDIA
(22) Date of filing of Application :03/10/2012
(21) Application No.8442/CHENP/2012 A
(43) Publication Date : 07/11/2014

(54) Title of the invention : RECANALIZING OCCLUDED VESSELS USING RADIOFREQUENCY ENERGY

(51) International classification :A61B18/18
(31) Priority Document No :12/753844
(32) Priority Date :02/04/2010
(33) Name of priority country :U.S.A.
(86) International Application No :PCT/US2011/031018
Filing Date :01/04/2011
(87) International Publication No :WO 2011/123834
(61) Patent of Addition to Application Number :NA
Filing Date :NA
(62) Divisional to Application Number :NA
Filing Date :NA

(71)**Name of Applicant :**
1)RETROVASCULAR INC.
Address of Applicant :5976 West Las Positas Blvd. Pleasanton California 94588 U.S.A.
(72)**Name of Inventor :**
1)KATOH Osamu
2)OGATA Wayne

(57) Abstract :
A method and systems for treating chronic total occlusions particularly those that are difficult to treat is disclosed. In this approach recanalizing the CTO is achieved using a combined antegrade and retrograde approach. The proximal end of the occlusion is penetrated using an antegrade wire using a traditional approach. Using collateral vessels the distal end of the occlusion is crossed in a retrograde fashion. By appropriately maneuvering each member and applying radiofrequency energy between the proximal and distal ends of the occlusion a continuous channel is created.

No. of Pages : 53 No. of Claims : 31

(12) PATENT APPLICATION PUBLICATION
(19) INDIA
(22) Date of filing of Application :21/10/2013
(21) Application No.8442/CHENP/2013 A
(43) Publication Date : 07/11/2014

(54) Title of the invention : HIGH FREQUENCY SWITCH

(51) International classification :H01P1/15,H03K17/74,H04B1/44
(31) Priority Document No :2011119379
(32) Priority Date :27/05/2011
(33) Name of priority country :Japan
(86) International Application No :PCT/JP2012/063131
Filing Date :23/05/2012
(87) International Publication No :WO 2012/165241
(61) Patent of Addition to Application Number :NA
Filing Date :NA
(62) Divisional to Application Number :NA
Filing Date :NA

(71)**Name of Applicant :**
1)Mitsubishi Electric Corporation
Address of Applicant :7 3 Marunouchi 2 chome Chiyoda ku Tokyo 1008310 Japan
(72)**Name of Inventor :**
1)SAMESHIMA Fuminori
2)KOHAMA Masahiko
3)MORIMOTO Takuo

(57) Abstract :
A small high frequency switch that does not require an external control signal is provided. One end of the high frequency switch is connected to an antenna terminal (1) (a first high frequency signal input/output terminal) and the other end thereof is connected to a transmission terminal (2) (a second high frequency signal input/output terminal). Furthermore the high frequency switch comprises an antiparallel diode (4) (a first antiparallel diode) that is in a conducting state in the input electric power not less than the predetermined high frequency electric power. When the high frequency switch is a SPDT system the high frequency switch may comprise a quarter wave line (5) based on an operating frequency of the high frequency switch where one end thereof is connected to the antenna terminal (1) and the other end thereof is connected to a reception terminal (3) (a third high frequency signal input/output terminal) and an antiparallel diode (7) (a second antiparallel diode) that is connected to the reception terminal (3) and a ground (6) and is in a conducting state in the input electric power not less than the predetermined high frequency electric power.

No. of Pages : 33 No. of Claims : 7

(12) PATENT APPLICATION PUBLICATION
(19) INDIA
(22) Date of filing of Application :21/10/2013
(21) Application No.8445/CHENP/2013 A
(43) Publication Date : 07/11/2014

(54) Title of the invention : NOVEL CEPHEM COMPOUND HAVING CATECHOL OR PSEUDO CATECHOL STRUCTURE

(51) International classification :C07D501/46,A61K31/546,A61P31/04
(31) Priority Document No :2011101530
(32) Priority Date :28/04/2011
(33) Name of priority country :Japan
(86) International Application No :PCT/JP2012/061053
Filing Date :25/04/2012
(87) International Publication No :WO 2012/147773
(61) Patent of Addition to Application Number :NA
Filing Date :NA
(62) Divisional to Application Number :NA
Filing Date :NA

(71)**Name of Applicant :**
1)Shionogi & Co. Ltd.
Address of Applicant :1 8 Doshomachi 3 chome Chuo ku Osaka shi Osaka 5410045 Japan
(72)**Name of Inventor :**
1)NISHITANI Yasuhiro
2)AOKI Toshiaki
3)SATO Jun
4)YAMAWAKI Kenji
5)YOKOO Katsuki
6)SANO Masayuki

(57) Abstract :
The present invention provides a novel compound having a wide antibacterial spectrum and expressing strong antibacterial activity against beta lactamase producing gram negative bacteria in particular. This invention provides the compound represented by formula (I) (the meanings of the symbols are defined in the specification) or a protected product in which an amino group when the amino group exists on the ring in the 7 position side chain is protected a pharmaceutically acceptable salt of the compound or protected product and a pharmaceutical composition containing the same.

No. of Pages : 281 No. of Claims : 35

(12) PATENT APPLICATION PUBLICATION
(19) INDIA
(22) Date of filing of Application :07/10/2013
(21) Application No.8078/CHENP/2013 A
(43) Publication Date : 07/11/2014

(54) Title of the invention : AUGMENTED REALITY FOR LIVE EVENTS

(51) International classification :H04N21/478,A63F13/10
(31) Priority Document No :61/478416
(32) Priority Date :22/04/2011
(33) Name of priority country :U.S.A.
(86) International Application No :PCT/US2012/032835
Filing Date :10/04/2012
(87) International Publication No :WO 2012/145189
(61) Patent of Addition to Application Number :NA
Filing Date :NA
(62) Divisional to Application Number :NA
Filing Date :NA

(71)**Name of Applicant :**
1)QUALCOMM INCORPORATED
Address of Applicant :Attn: International IP Administration 5775 Morehouse Drive San Diego California 92121 1714 U.S.A.
(72)**Name of Inventor :**
1)SATYANARAYANA Madhukara B.
2)BARCLAY Strachan P.

(57) Abstract :
Arrangements for using augmented reality in conjunction with a live event are presented. A data stream corresponding to a live event may be received. The data stream may comprise live video wherein the live video comprises a live object. Input from a user may be received wherein the input affects behavior of a virtual object. The live event augmented by the virtual object may be presented. The behavior of the live object of the live event may affect the behavior of the virtual object.

No. of Pages : 44 No. of Claims : 36

(12) PATENT APPLICATION PUBLICATION
(19) INDIA
(22) Date of filing of Application :07/10/2013
(21) Application No.8081/CHENP/2013 A
(43) Publication Date : 07/11/2014

(54) Title of the invention : A FORMATION PENETRATING TOOL

(51) International classification :E21B43/26,E21B43/114
(31) Priority Document No :11168240.7
(32) Priority Date :31/05/2011
(33) Name of priority country :EPO
(86) International Application No :PCT/EP2012/060146
Filing Date :30/05/2012
(87) International Publication No :WO 2012/163967
(61) Patent of Addition to Application Number :NA
Filing Date :NA
(62) Divisional to Application Number :NA
Filing Date :NA

(71)**Name of Applicant :**
1)WELLTEC A/S
Address of Applicant :Gydevang 25 DK 3450 Aller¸d Denmark
(72)**Name of Inventor :**
1)HALLUNDB†K J¸rgen
2)MANGAL Lars

(57) Abstract :
The present invention relates to a formation penetrating tool submersible into a casing in a well for hydraulically penetrating a formation and having a longitudinal tool axis comprising a tool housing a supply hose slidable in the tool housing for supplying a high pressurised fluid to a nozzle and the tool housing having an opening through which the supply hose and the nozzle are led to penetrate the formation wherein the formation penetrating tool further comprises a pump arranged in the tool housing the pump being in fluid communication with the supply hose for providing a jet of fluid out of the nozzle for penetrating the formation. Furthermore the invention relates to a downhole system comprising a formation penetrating tool according to the invention and to a method for hydraulically penetrating a formation.

No. of Pages : 31 No. of Claims : 23

(12) PATENT APPLICATION PUBLICATION
(19) INDIA
(22) Date of filing of Application :19/10/2013
(21) Application No.8435/CHENP/2013 A
(43) Publication Date : 07/11/2014

(54) Title of the invention : METHOD FOR SWITCHOVER BETWEEN MBMS TRANSMISSION MODES APPARATUS AND USER EQUIPMENT

(51) International classification :H04W36/28
(31) Priority Document No :201110068051.4
(32) Priority Date :21/03/2011
(33) Name of priority country :China
(86) International Application No :PCT/CN2012/071153
Filing Date :15/02/2012
(87) International Publication No :WO 2012/126296
(61) Patent of Addition to Application Number :NA
Filing Date :NA
(62) Divisional to Application Number :NA
Filing Date :NA

(71)**Name of Applicant :**
1)ZTE CORPORATION
Address of Applicant :ZTE Plaza Keji Road South Hi Tech Industrial Park Nanshan Shenzhen Guangdong 518057 China
(72)**Name of Inventor :**
1)GOU Wei
2)MA Zijiang
3)XU Hui
4)WANG Bin

(57) Abstract :
Disclosed in the present invention are a method for switchover between multimedia broadcast multicast service (MBMS) transmission modes and apparatus said method comprising: the network side notifies a user equipment (UE) of one or several MBMSs to be transmitted by means of a point to multipoint (PTM) mode then transmits to the UE relevant information for said one or several MBMSs. The present invention ensures that during the change from a PTP mode to the PTM mode the UE has MBMS reception continuity and is easy to implement and operate.

No. of Pages : 35 No. of Claims : 29

(12) PATENT APPLICATION PUBLICATION
(19) INDIA
(22) Date of filing of Application :21/10/2013
(21) Application No.8436/CHENP/2013 A
(43) Publication Date : 07/11/2014

(54) Title of the invention : ABSORBENT ARTICLE PRODUCTION METHOD

(51) International classification :A61F13/15,A61F13/49,B65G47/68
(31) Priority Document No :2011066455
(32) Priority Date :24/03/2011
(33) Name of priority country :Japan
(86) International Application No :PCT/JP2012/053916
Filing Date :20/02/2012
(87) International Publication No :WO 2012/127954
(61) Patent of Addition to Application Number :NA
Filing Date :NA
(62) Divisional to Application Number :NA
Filing Date :NA

(71)**Name of Applicant :**
1)UNICHARM CORPORATION
Address of Applicant :182 Shimobun Kinsei cho Shikokuchuo shi Ehime 7990111 Japan
(72)**Name of Inventor :**
1)MURAKAMI Seiji

(57) Abstract :
The absorbent article production method is provided with: a placement process of conveying a web (7) of constituent parts that configure the absorbent article (1) in a continuous state and placing absorbents on the web (7); a folding process of folding the web; a cutting process (S5) of cutting the web to form multiple absorbent articles; an allotting process (S6) of parceling out the cut absorbent articles one by one onto a first pathway (75) or a second pathway (76); and an orientation changing process (S8) for changing the orientation of the absorbent articles.

No. of Pages : 15 No. of Claims : 3

(12) PATENT APPLICATION PUBLICATION
(19) INDIA
(22) Date of filing of Application :21/10/2013
(21) Application No.8438/CHENP/2013 A
(43) Publication Date : 07/11/2014

(54) Title of the invention : PROCESS FOR PRODUCTION OF A BAKED PRODUCT

(51) International classification :A21D8/04
(31) Priority Document No :1022/CHE/2011
(32) Priority Date :29/03/2011
(33) Name of priority country :India
(86) International Application No :PCT/EP2012/055676
Filing Date :29/03/2012
(87) International Publication No :WO 2012/130969
(61) Patent of Addition to Application Number :NA
Filing Date :NA
(62) Divisional to Application Number :NA
Filing Date :NA

(71)**Name of Applicant :**
1)NOVOZYMES A/S
Address of Applicant :Krogshoejvej 36 DK 2880 Bagsvaerd Denmark
(72)**Name of Inventor :**
1)TRIPATHY Suchitra
2)CHAKRABORTY Sidhartha

(57) Abstract :
The present invention relates to a process for producing laminated dough comprising mixing flour water a glucose oxidase and xylanase to obtain dough; laminating the dough; and obtaining the laminated dough. The method may further comprise adding of a maltogenic amylase and/or a beta amylase.

No. of Pages : 22 No. of Claims : 13

(12) PATENT APPLICATION PUBLICATION
(19) INDIA
(22) Date of filing of Application :21/10/2013
(21) Application No.8440/CHENP/2013 A
(43) Publication Date : 07/11/2014

(54) Title of the invention : ESTERIFICATION PROCESS

(51) International classification :C12P7/64
(31) Priority Document No :11160478.1
(32) Priority Date :30/03/2011
(33) Name of priority country :EPO
(86) International Application No :PCT/EP2012/055668
Filing Date :29/03/2012
(87) International Publication No :WO 2012/130961
(61) Patent of Addition to Application Number :NA
Filing Date :NA
(62) Divisional to Application Number :NA
Filing Date :NA

(71)**Name of Applicant :**
1)NOVOZYMES A/S
Address of Applicant :Krogshoejvej 36 DK 2880 Bagsvaerd Denmark
(72)**Name of Inventor :**
1)NIELSEN Per Munk
2)HOLM Hans Christian

(57) Abstract :
The invention relates to the utilisation of fatty acid feedstockin the production of biodiesel by the use of microbial enzymes.

No. of Pages : 22 No. of Claims : 15

(12) PATENT APPLICATION PUBLICATION
(19) INDIA
(22) Date of filing of Application :07/10/2013
(21) Application No.8084/CHENP/2013 A
(43) Publication Date : 07/11/2014

(54) Title of the invention : CELLULOSIC BARRIER PACKAGING MATERIAL

(51) International classification :B65D65/40,B65D65/46,B32B15/08
(31) Priority Document No :61/477172
(32) Priority Date :20/04/2011
(33) Name of priority country :U.S.A.
(86) International Application No :PCT/EP2012/056892
Filing Date :16/04/2012
(87) International Publication No :WO 2012/143323
(61) Patent of Addition to Application Number :NA
Filing Date :NA
(62) Divisional to Application Number :NA
Filing Date :NA

(71)**Name of Applicant :**
1)BASF SE
Address of Applicant :67056 Ludwigshafen Germany
(72)**Name of Inventor :**
1)SIEGENTHALER Kai Oliver
2)BLUM Rainer
3)SKUPIN Gabriel
4)YAMAMOTO Motonori

(57) Abstract :
A barrier packaging material containing a composite which comprises i) a cellulosic layer; ii) at least one metal layer which will dissolve under alkaline conditions; and iii) at least one polymer layer in which the polymer is hydrolysable under alkaline conditions. The invention also relates to articles comprising the barrier packaging material. Further the invention concerns the use of a polymer which is hydrolysable under alkaline conditions as a protective layer in barrier packaging products. In addition the present application is also concerned with a method for recycling the aforementioned barrier packaging products. Specifically the barrier packaging products are initially taken in an aqueous wastepaper suspension which is either pulped in an alkaline medium and/or treated in an alkaline medium in a deinking process and in which the metal and polymer are then separated from the cellulosic fibres contained in the cellulosic layer.

No. of Pages : 19 No. of Claims : 13

(12) PATENT APPLICATION PUBLICATION
(19) INDIA
(22) Date of filing of Application :07/10/2013
(21) Application No.8085/CHENP/2013 A
(43) Publication Date : 07/11/2014

(54) Title of the invention : REINFORCED STRUCTURES IN THE GROUND

(51) International classification :E02D29/02
(31) Priority Document No :11 52639
(32) Priority Date :30/03/2011
(33) Name of priority country :France
(86) International Application No :PCT/FR2012/050694
Filing Date :30/03/2012
(87) International Publication No :WO 2012/131273
(61) Patent of Addition to Application Number :NA
Filing Date :NA
(62) Divisional to Application Number :NA
Filing Date :NA

(71)**Name of Applicant :**
1)TERRE ARMEE INTERNATIONALE
Address of Applicant :1Bis rue du Petit Clamart F 78140 Velizy Villacoublay France
(72)**Name of Inventor :**
1)FREITAG Nicolas

(57) Abstract :
The invention relates to reinforced structures in the ground including an embankment a facing (4) placed along the front surface of the structure an anchoring element (6) including a projecting element (8) which projects relative to an inner surface of the structure and an attachment element (10) and a stabilisation element (12) including at least two longitudinal portions (14 16) continuously connected together by an elbow portion (18) said elbow portion being delimited by a throat (20) forming together with said elbow portion an anchoring space suitable for receiving the attachment element of the anchoring element the anchoring space and the attachment element being shaped so as to limit the movement of the stabilisation element in every direction substantially parallel to the longitudinal direction of the stabilisation element (12).

No. of Pages : 21 No. of Claims : 11

(12) PATENT APPLICATION PUBLICATION
(19) INDIA
(22) Date of filing of Application :14/10/2013
(21) Application No.8298/CHENP/2013 A
(43) Publication Date : 07/11/2014

(54) Title of the invention : METHOD AND APPARATUS FOR TRANSMITTING AND RECEIVING CONTROL INFORMATION IN A BROADCASTING/COMMUNICATION SYSTEM

(51) International classification :H03M13/05
(31) Priority Document No :1020110027239
(32) Priority Date :25/03/2011
(33) Name of priority country :Republic of Korea
(86) International Application No :PCT/KR2012/002145
Filing Date :23/03/2012
(87) International Publication No :WO 2012/134121
(61) Patent of Addition to Application Number :NA
Filing Date :NA
(62) Divisional to Application Number :NA
Filing Date :NA

(71)**Name of Applicant :**
1)SAMSUNG ELECTRONICS CO. LTD.
Address of Applicant :129 Samsung ro Yeongtong gu Suwon si Gyeonggi do 443 742 Republic of Korea
(72)**Name of Inventor :**
1)JEONG Hong Sil
2)GUTIERREZ Ismael
3)MOURAD Alain
4)YUN Sung Ryul
5)YANG Hyun Koo

(57) Abstract :
A method and an apparatus for encoding transmitting and receiving signaling information in a broadcasting/communication system are provided. The method includes generating the signaling information which comprises a plurality of pieces; determining a number of coded blocks to which the signaling information is to be encoded based on a number of bits of the signaling information and a number of encoder input information bit; segmenting each piece of the signaling information based on the number of the coded blocks; constructing input information bits of each coded block to include segmented parts of each piece of the signaling information; encoding the input information bits to each coded block; and transmitting each coded block.

No. of Pages : 57 No. of Claims : 18

(12) PATENT APPLICATION PUBLICATION
(19) INDIA
(22) Date of filing of Application :22/10/2013
(21) Application No.8492/CHENP/2013 A
(43) Publication Date : 07/11/2014

(54) Title of the invention : MOLECULAR DISPENSERS

(51) International classification :C02F1/40,C12M1/34
(31) Priority Document No :13/162833
(32) Priority Date :17/06/2011
(33) Name of priority country :U.S.A.
(86) International Application No :PCT/US2012/037748
Filing Date :14/05/2012
(87) International Publication No :WO 2012/173723
(61) Patent of Addition to Application Number :NA
Filing Date :NA
(62) Divisional to Application Number :NA
Filing Date :NA

(71)**Name of Applicant :**
1)INTERNATIONAL BUSINESS MACHINES CORP.
Address of Applicant :New Orchard Road Armonk New York 10504 U.S.A.
(72)**Name of Inventor :**
1)ROYYURU Ajay K.

(57) Abstract :
A method for dispensing charged particles includes applying a bias voltage to promote motion of charged molecules through a nanopore detecting passage of at least one charged molecule through the nanopore and manipulating an electrostatic potential barrier inside the nanopore so as to prevent movement of additional charged molecules through the nanopore.

No. of Pages : 25 No. of Claims : 24

(12) PATENT APPLICATION PUBLICATION
(19) INDIA
(22) Date of filing of Application :22/10/2013
(21) Application No.8495/CHENP/2013 A
(43) Publication Date : 07/11/2014

(54) Title of the invention : VECTOR FRIENDLY INSTRUCTION FORMAT AND EXECUTION THEREOF

(51) International classification :G06F9/30,G06F9/305,G06F9/06
(31) Priority Document No :61/471043
(32) Priority Date :01/04/2011
(33) Name of priority country :U.S.A.
(86) International Application No :PCT/US2011/054303
Filing Date :30/09/2011
(87) International Publication No:WO 2012/134532
(61) Patent of Addition to Application Number :NA
Filing Date :NA
(62) Divisional to Application Number :NA
Filing Date :NA

(71)**Name of Applicant :**
1)INTEL CORPORATION
Address of Applicant :2200 Mission College Boulevard M/s: RNB 4 150 Santa Clara CA 95052 U.S.A.
(72)**Name of Inventor :**
1)VALENTINE Robert C.
2)SAN ADRIAN Jesus Corbal
3)SANS Roger Espasa
4)CAVIN Robert D.
5)TOLL Bret L.
6)DURAN Santiago Galan
7)WIEDEMEIER Jeffrey G.
8)SAMUDRALA Sridhar
9)GIRKAR Milind Baburao
10)GROCHOWSKI Edward Thomas
11)HALL Jonathan Cannon
12)BRADFORD Dennis R.
13)OULD AHMED VALL Elmoustapha
14)ABEL James C.
15)CHARNEY Mark
16)ABRAHAM Seth
17)SAIR Suleyman
18)FORSYTH Andrew Thomas
19)YOUNT Charles
20)WU Lisa

(57) Abstract :
A vector friendly instruction format and execution thereof. According to one embodiment of the invention a processor is configured to execute an instruction set. The instruction set includes a vector friendly instruction format. The vector friendly instruction format has a plurality of fields including a base operation field a modifier field an augmentation operation field and a data element width field wherein the first instruction format supports different versions of base operations and different augmentation operations through placement of different values in the base operation field the modifier field the alpha field the beta field and the data element width field and wherein only one of the different values may be placed in each of the base operation field the modifier field the alpha field the beta field and the data element width field on each occurrence of an instruction in the first instruction format in instruction streams.

No. of Pages : 150 No. of Claims : 128

(12) PATENT APPLICATION PUBLICATION
(19) INDIA
(22) Date of filing of Application :22/10/2013
(21) Application No.8497/CHENP/2013 A
(43) Publication Date : 07/11/2014

(54) Title of the invention : METHOD FOR THE GENERATION OF COMPACT TALE NUCLEASES AND USES THEREOF

(51) International classification :A61K38/16,C12N9/22,C12N15/10
(31) Priority Document No :61/472065
(32) Priority Date :05/04/2011
(33) Name of priority country :U.S.A.
(86) International Application No :PCT/US2012/032426
Filing Date :05/04/2012
(87) International Publication No :WO 2012/138927
(61) Patent of Addition to Application Number :NA
Filing Date :NA
(62) Divisional to Application Number :NA
Filing Date :NA

(71)**Name of Applicant :**
1)CELLECTIS
Address of Applicant :8 rue de la Croix Jarry F 75013 Paris France
(72)**Name of Inventor :**
1)DUCHATEAU Philippe
2)JUILLERAT Alexandre
3)VALTON Julien
4)BERTONATI Claudia
5)EPINAT Jean Charles
6)SILVA George H.
7)BEURDELEY Marine

(57) Abstract :
The present invention relates to a method for the generation of compact Transcription Activator Like Effector Nucleases (TALENs) that can efficiently target and process double stranded DNA. More specifically the present invention concerns a method for the creation of TALENs that consist of a single TALE DNA binding domain fused to at least one catalytic domain such that the active entity is composed of a single polypeptide chain for simple and efficient vectorization and does not require dimerization to target a specific single double stranded DNA target sequence of interest and process DNA nearby said DNA target sequence. The present invention also relates to compact TALENs vectors compositions and kits used to implement the method.

No. of Pages : 161 No. of Claims : 77

(12) PATENT APPLICATION PUBLICATION
(19) INDIA
(22) Date of filing of Application :22/10/2013
(21) Application No.8498/CHENP/2013 A
(43) Publication Date : 07/11/2014

(54) Title of the invention : A FRAME STRUCTURE OF A WIRELESS COMMUNICATION SYSTEM AND METHOD AND APPARATUS FOR TRANSMITTING AND RECEIVING A PLURALITY OF DATA STREAMS THROUGH THE FRAME STRUCTURE

(51) International classification :H04W28/06
(31) Priority Document No :1106033.2
(32) Priority Date :08/04/2011
(33) Name of priority country :U.K.
(86) International Application No :PCT/KR2012/002647
Filing Date :06/04/2012
(87) International Publication No :WO 2012/138187
(61) Patent of Addition to Application Number :NA
Filing Date :NA
(62) Divisional to Application Number :NA
Filing Date :NA

(71)**Name of Applicant :**
1)SAMSUNG ELECTRONICS CO. LTD.
Address of Applicant :129 Samsung ro Yeongtong gu Suwon si Gyeonggi do 443 742 Republic of Korea
(72)**Name of Inventor :**
1)MOURAD Alain
2)GUTIERREZ Ismael

(57) Abstract :
A method and apparatus are provided for transmitting and receiving data data through a frame in a wireless communication system the method comprising: configurating a frame including a preamble section and a data section the preamble section includes fixed data items and configuration data items and the data section includes at least one of PLP(Physical Layer Pipe)s; and transmitting the configurated frame wherein the configuration data items related to the at least one of the PLPs the preamble section of the frame is configurated according to repetition lengths of the configuration data items.

No. of Pages : 23 No. of Claims : 14

(12) PATENT APPLICATION PUBLICATION
(19) INDIA
(22) Date of filing of Application :22/10/2013
(21) Application No.8499/CHENP/2013 A
(43) Publication Date : 07/11/2014

(54) Title of the invention : ASSOCIATION MARKERS FOR BETA THALASSEMIA TRAIT

(51) International classification :C12Q1/68
(31) Priority Document No :61/472228
(32) Priority Date :06/04/2011
(33) Name of priority country :U.S.A.
(86) International Application No :PCT/IB2012/051520
Filing Date :29/03/2012
(87) International Publication No :WO 2012/137110
(61) Patent of Addition to Application Number :NA
Filing Date :NA
(62) Divisional to Application Number :NA
Filing Date :NA

(71)**Name of Applicant :**
1)KONINKLIJKE PHILIPS N.V.
Address of Applicant :High Tech Campus 5 NL 5656 AE Eindhoven Netherlands
(72)**Name of Inventor :**
1)KADAVIL Sina Vivekanandan
2)KUMAR Sunil
3)SINGH Randeep
4)DIMITROVA Nevenka

(57) Abstract :
The present invention relates to isolated nucleic acid molecules of SEQ ID NO: 1 to SEQ ID NO: 14 which show a single polymorphic change at position 501 where the wildtype nucleotide is replaced by an indicator nucleotide respectively. The present invention further relates to the mentioned nucleic acid molecules wherein a panel of 1 2 3 4 5 6 7 8 9 10 11 12 13 or 14 of the polymorphic changed sequences comprising the mentioned indicator nucleotides constitutes a marker for beta thalassemia in particular of beta thalassemia minor. Further envisaged are specific panels comprising SEQ ID NO: 1; or SEQ ID NO 1 and 2; or SEQ ID NO: 1 2 and 3 or SEQ ID NO: 1 2 3 and 4; or SEQ ID NO: 1 to 5; or SEQ ID NO: 1 to 6; or SEQ ID NO: 1 to 7; or SEQ ID NO: 1 to 14; or SEQ ID NO: 8 and 14; or SEQ ID NO: 8 and 9; or SEQ ID NO: 2 4 and 13. The present invention further relates to a method of detecting or diagnosing beta thalassemia preferably of beta thalassemia minor in a subject comprising the steps of: (a) isolating a nucleic acid from a subject s sample (b) determining the nucleotide sequence and/or molecular structure present at one or more of the mentioned polymorphic sites wherein the presence of an indicator nucleotide indicative of the presence of beta thalassemia. Also envisaged are a corresponding composition for detecting or diagnosing beta thalassemia the use of the mentioned nucleic acid molecules for detecting or diagnosing beta thalassemia or for screening a population for the presence of beta thalassemia as well as a corresponding kit. The methods compositions uses and kits of the invention also relate to the assessment of the risk of developing beta thalassemia in a subject and/or in a subject s progeny.

No. of Pages : 83 No. of Claims : 15

(12) PATENT APPLICATION PUBLICATION
(19) INDIA
(22) Date of filing of Application :04/09/2013
(21) Application No.7109/CHENP/2013 A
(43) Publication Date : 07/11/2014

(54) Title of the invention : ANCHORING VIRTUAL IMAGES TO REAL WORLD SURFACES IN AUGMENTED REALITY SYSTEMS

(51) International classification :G06T19/00
(31) Priority Document No :61/468937
(32) Priority Date :29/03/2011
(33) Name of priority country :U.S.A.
(86) International Application No :PCT/US2012/031301
Filing Date :29/03/2012
(87) International Publication No :WO 2012/135546
(61) Patent of Addition to Application Number :NA
Filing Date :NA
(62) Divisional to Application Number :NA
Filing Date :NA

(71)**Name of Applicant :**
1)QUALCOMM INCORPORATED
Address of Applicant :Attn: International Ip Administration 5775 Morehouse Drive San Diego California 92121 U.S.A.
(72)**Name of Inventor :**
1)MACIOCCI Giuliano
2)EVERITT Andrew J.
3)MABBUTT Paul
4)BERRY David T.

(57) Abstract :
A head mounted device provides an immersive virtual or augmented reality experience for viewing data and enabling collaboration among multiple users. Rendering images in a virtual or augmented reality system may include capturing an image and spatial data with a body mounted camera and sensor array receiving an input indicating a first anchor surface calculating parameters with respect to the body mounted camera and displaying a virtual object such that the virtual object appears anchored to the selected first anchor surface. Further operations may include receiving a second input indicating a second anchor surface within the captured image that is different from the first anchor surface calculating parameters with respect to the second anchor surface and displaying the virtual object such that the virtual object appears anchored to the selected second anchor surface and moved from the first anchor surface.

No. of Pages : 213 No. of Claims : 108

(12) PATENT APPLICATION PUBLICATION
(19) INDIA
(22) Date of filing of Application :07/10/2013
(21) Application No.8103/CHENP/2013 A
(43) Publication Date : 07/11/2014

(54) Title of the invention : DRUG DELIVERY DEVICE AND CARTRIDGE HOLDER FOR A DRUG DELIVERY DEVICE

(51) International classification :A61M5/24,A61M5/31,A61M5/00
(31) Priority Document No :11165047.9
(32) Priority Date :06/05/2011
(33) Name of priority country :EPO
(86) International Application No :PCT/EP2012/058182
Filing Date :04/05/2012
(87) International Publication No :WO 2012/152668
(61) Patent of Addition to Application Number :NA
Filing Date :NA
(62) Divisional to Application Number :NA
Filing Date :NA

(71)**Name of Applicant :**
1)SANOFI AVENTIS DEUTSCHLAND GMBH
Address of Applicant :Br¼ningstrae 50 65929 Frankfurt am Main Germany
(72)**Name of Inventor :**
1)SCHNEIDER Christiane
2)STEVER Tobias
3)HARMS Michael
4)JAKOBI Ulrik

(57) Abstract :
Drug delivery device and cartridge holder for a drug delivery device A drug delivery device is provided comprising a cartridge holder (2) comprising at least one guide track (12) and a body (3) comprising at least one interaction member (13) adapted to mechanically cooperate with the at least one guide track. The guide track (12) comprises a first section (12A) and a second section (12B) wherein the path which is defined by the first section (12A) encloses an angle with the longitudinal axis (14) of the device wherein for connecting the cartridge holder (2) to the body (3) the interaction member (13) is configured to mechanically cooperate with the first section (12A) such that the cartridge holder (2) is axially moved and rotated with respect to the body (3) and the interaction member (13) is configured to mechanically cooperate with the second section (12B) such that the cartridge holder (2) is rotated with respect to the body (3) whereby an axial movement of the cartridge holder (2) with respect to the body (3) is prevented.

No. of Pages : 28 No. of Claims : 14

(12) PATENT APPLICATION PUBLICATION
(19) INDIA
(22) Date of filing of Application :07/10/2013
(21) Application No.8107/CHENP/2013 A
(43) Publication Date : 07/11/2014

(54) Title of the invention : OFFLOADING OF DATA TO WIRELESS LOCAL AREA NETWORK

(51) International classification :H04W48/16,H04W48/18,H04W68/12
(31) Priority Document No :61/478123
(32) Priority Date :22/04/2011
(33) Name of priority country :U.S.A.
(86) International Application No :PCT/US2012/034582
Filing Date :20/04/2012
(87) International Publication No :WO 2012/145720
(61) Patent of Addition to Application Number :NA
Filing Date :NA
(62) Divisional to Application Number :NA
Filing Date :NA

(71)**Name of Applicant :**
1)QUALCOMM INCORPORATED
Address of Applicant :Attn: International Ip Administration 5775 Morehouse Drive San Diego CA 92121 U.S.A.
(72)**Name of Inventor :**
1)MEYLAN Arnaud
2)SHAH Tejash Rajnikant
3)SUNDARARAJAN Jay Kumar

(57) Abstract :
Methods systems and devices are described for intercepting socket calls from applications installed on a mobile device while a first wireless interface is active. The first wireless interface is a cellular interface. Upon determining to release the intercepted socket calls to the socket layer a second wireless interface is activated. The second wireless interface is a Wireless Local Area Network (WLAN) interface. The sockets calls are released to the socket layer and transmitted using the activated second wireless interface. Upon substantially completing the socket calls the second wireless interface is deactivated. The intercepting of the socket calls and the activation of the second wireless interface occurs while the mobile device is in an idle mode.

No. of Pages : 47 No. of Claims : 39

(12) PATENT APPLICATION PUBLICATION
(19) INDIA
(22) Date of filing of Application :22/10/2013
(21) Application No.8490/CHENP/2013 A
(43) Publication Date : 07/11/2014

(54) Title of the invention : INCREASE IN STORAGE LIFETIME OF A THROMBIN SENSOR

(51) International classification :C12Q1/56,G01N33/49,G01N33/86
(31) Priority Document No :11166266.4
(32) Priority Date :16/05/2011
(33) Name of priority country :EPO
(86) International Application No :PCT/EP2012/058297
Filing Date :04/05/2012
(87) International Publication No :WO 2012/156216
(61) Patent of Addition to Application Number :NA
Filing Date :NA
(62) Divisional to Application Number :NA
Filing Date :NA

(71)**Name of Applicant :**
1)THE SWATCH GROUP RESEARCH AND DEVELOPMENT LTD
Address of Applicant :Rue des Sors 3 CH 2074 Marin Switzerland
(72)**Name of Inventor :**
1)SCHUHMANN Wolfgang
2)FRENKEL Erik Jan

(57) Abstract :
A blood coagulation time measuring sensor comprising a surface a resin layer applied thereto including at least one substance with a detection function characterized in that the resin layer comprises a lacquer system wherein said lacquer system i) is suitable for immobilization of the at least one substance with a detection function on the surface; and ii) provides a negatively charged surface layer; iii) and allows the replacement of biological blood coagulation promoters by non biological chemically inert and stable compounds.

No. of Pages : 38 No. of Claims : 7

(12) PATENT APPLICATION PUBLICATION
(19) INDIA
(22) Date of filing of Application :08/10/2013
(21) Application No.8166/CHENP/2013 A
(43) Publication Date : 07/11/2014

(54) Title of the invention : CONTACT DEVICE

(51) International classification :H01H50/54
(31) Priority Document No :2011063368
(32) Priority Date :22/03/2011
(33) Name of priority country :Japan
(86) International Application No :PCT/JP2012/056087
Filing Date :09/03/2012
(87) International Publication No :WO 2012/128072
(61) Patent of Addition to Application Number :NA
Filing Date :NA
(62) Divisional to Application Number :NA
Filing Date :NA

(71)**Name of Applicant :**
1)PANASONIC CORPORATION
Address of Applicant :1006 Oaza Kadoma Kadoma shi Osaka 5718501 Japan
(72)**Name of Inventor :**
1)YAMAMOTO Ritsu
2)NISHIMURA Tsukasa

(57) Abstract :
Provided is a contact device with a structure wherein all of three moving contacts can be brought into secure contact with a fixed contact. The contact device is provided with: a fixed terminal (37) that has a fixed contact (35); a movable terminal (28) that comes in contact with and separates from the fixed terminal (37) and that has three moving contacts (31a 31b 31c) that come in contact with the fixed contact (35); and a contact pressure spring (33) that presses the movable terminal (28) and causes the fixed contact (35) to come into contact with the moving contacts (31a 31b 31c) at a predetermined contact pressure. The contact device is characterized by a structure wherein an operating point of the contact pressure spring (33) is located within a triangular region formed by internal tangent lines of the three moving contacts.

No. of Pages : 62 No. of Claims : 7

(12) PATENT APPLICATION PUBLICATION
(19) INDIA
(22) Date of filing of Application :08/10/2013
(21) Application No.8167/CHENP/2013 A
(43) Publication Date : 07/11/2014

(54) Title of the invention : INVERTER HAVING EXTENDED LIFETIME DC LINK CAPACITORS

(51) International classification	:H02M7/44,H01G9/145,H01L31/042
(31) Priority Document No	:61/450862
(32) Priority Date	:09/03/2011
(33) Name of priority country	:U.S.A.
(86) International Application No	:PCT/CA2012/000206
Filing Date	:08/03/2012
(87) International Publication No	:WO 2012/119232
(61) Patent of Addition to Application Number	:NA
Filing Date	:NA
(62) Divisional to Application Number	:NA
Filing Date	:NA

(71)**Name of Applicant :**
1)SOLANTRO SEMICONDUCTOR CORP.
Address of Applicant :146 Colonnade Road Suite 102 Ottawa Ontario K2E 7Y1 Canada
(72)**Name of Inventor :**
1)COJOCARU Christian
2)ORR Raymond Kenneth

(57) Abstract :
An inverter having extended lifetime DC link capacitors for use with a DC power source such as a photovoltaic panel is described. The inverter uses a plurality of switchable capacitors to control the voltage across the capacitors. The expected lifetime of the capacitors can be extended by disconnecting unnecessary capacitors from a voltage. The capacitors may be periodically connected to a voltage in order to maintain an oxide dielectric layer of the capacitor.

No. of Pages : 45 No. of Claims : 34

(12) PATENT APPLICATION PUBLICATION
(19) INDIA
(22) Date of filing of Application :16/10/2013
(21) Application No.8363/CHENP/2013 A
(43) Publication Date : 07/11/2014

(54) Title of the invention : APPARATUS FOR TREATING AN EYE USING A LASER BEAM

(51) International classification :A61F9/008,A61B18/20
(31) Priority Document No :20115302
(32) Priority Date :30/03/2011
(33) Name of priority country :Finland
(86) International Application No :PCT/FI2012/050319
Filing Date :30/03/2012
(87) International Publication No :WO 2012/131168
(61) Patent of Addition to Application Number :NA
Filing Date :NA
(62) Divisional to Application Number :NA
Filing Date :NA

(71)**Name of Applicant :**
1)VALON LASERS OY
Address of Applicant :Merimiehenkuja 5 FI 01670 Vantaa Finland
(72)**Name of Inventor :**
1)RUMMUKAINEN Taru

(57) Abstract :
An apparatus (1) for treating an eye using a laser beam includes a first light source (6) for producing a therapeutic laser beam (7) a second light source (8) for producing an alignment beam (9) and control means (2 3 4 10) for controlling the first and the second light source and for directing the therapeutic laser beam and the alignment beam onto the retina (13) of the eye (12) being treated. According to the invention that the control means (2 3 4 10) are arranged to control the second light source (8) and to direct the alignment beam (9) onto the retina (13) of the eye (12) being treated in such a way that the alignment beam forms a visual message (17) onto the retina as a function of at least one operational property of the therapeutic laser beam (7).

No. of Pages : 25 No. of Claims : 11

(12) PATENT APPLICATION PUBLICATION
(19) INDIA
(22) Date of filing of Application :16/10/2013
(21) Application No.8364/CHENP/2013 A
(43) Publication Date : 07/11/2014

(54) Title of the invention : APPARATUS AND METHOD FOR MAPPING AND DEMAPPING SIGNALS IN A COMMUNICATION SYSTEM USING A LOW DENSITY PARITY CHECK CODE

(51) International classification :H03M13/11
(31) Priority Document No :1020110029128
(32) Priority Date :30/03/2011
(33) Name of priority country :Republic of Korea
(86) International Application No :PCT/KR2012/002266
Filing Date :28/03/2012
(87) International Publication No :WO 2012/134160
(61) Patent of Addition to Application Number :NA
Filing Date :NA
(62) Divisional to Application Number :NA
Filing Date :NA

(71)**Name of Applicant :**
1)SAMSUNG ELECTRONICS CO. LTD.
Address of Applicant :129 Samsung ro Yeongtong gu Suwon si Gyeonggi do 443 742 Republic of Korea
(72)**Name of Inventor :**
1)YANG Hyun Koo
2)JEONG Hong Sil
3)YUN Sung Ryul

(57) Abstract :
An apparatus and method for mapping and demapping signals in a system using a Low Density Parity Check (LDPC) code are provided. In the method LDPC codeword bits are written column wise and read row wise substreams are generated by demultiplexing the read bits using a demultiplexing scheme and bits included in each of the substreams are mapped to symbols on a signal constellation wherein the demultiplexing scheme is determined corresponding to a modulation scheme used in the signal transmitter a length of the LDPC codeword and a number of the substreams.

No. of Pages : 34 No. of Claims : 12

(12) PATENT APPLICATION PUBLICATION
(19) INDIA
(22) Date of filing of Application :23/10/2013
(21) Application No.8556/CHENP/2013 A
(43) Publication Date : 07/11/2014

(54) Title of the invention : HARDWARE SUPPORT FOR HASHTABLES IN DYNAMIC LANGUAGES

(51) International classification :G06F9/44
(31) Priority Document No :61/491075
(32) Priority Date :27/05/2011
(33) Name of priority country :U.S.A.
(86) International Application No :PCT/US2012/038797
Filing Date :21/05/2012
(87) International Publication No :WO 2012/166410
(61) Patent of Addition to Application Number :NA
Filing Date :NA
(62) Divisional to Application Number :NA
Filing Date :NA

(71)**Name of Applicant :**
1)QUALCOMM INCORPORATED
Address of Applicant :Attn: International IP Administration 5775 Morehouse Drive San Diego California 92121 U.S.A.
(72)**Name of Inventor :**
1)CEZE Luis
2)RESHADI Mohammad H.
3)SARTORIUS Thomas

(57) Abstract :
The aspects enable a computing device to execute traditionally software based JavaScript® operations in hardware. Each JavaScript® object is hashed into a master hashtable that may be stored in the software. A portion of the software hashtable may be pushed to a hardware hashtable using special instruction set registers dedicated to hashtable processing. Each time a software process requests a hashtable operation (e.g. lookup) the hardware hashtable is checked to determine if the value exists in hardware. If the requested value is in the hardware hashtable the requested value is accessed in a single operation step. If the requested value is not in the hardware hashtable the requested value is extracted from the master hashtable in the software and a portion of the master hashtable containing the extracted value is pushed to the hardware using special instruction set registers.

No. of Pages : 46 No. of Claims : 58

(12) PATENT APPLICATION PUBLICATION
(19) INDIA
(22) Date of filing of Application :17/10/2013
(21) Application No.8397/CHENP/2013 A
(43) Publication Date : 07/11/2014

(54) Title of the invention : DOOR LOCKING DEVICE

(51) International classification :E05B65/20
(31) Priority Document No :2011100907
(32) Priority Date :28/04/2011
(33) Name of priority country :Japan
(86) International Application No :PCT/JP2012/060144
Filing Date :13/04/2012
(87) International Publication No :WO 2012/147540
(61) Patent of Addition to Application Number :NA
Filing Date :NA
(62) Divisional to Application Number :NA
Filing Date :NA

(71)**Name of Applicant :**
1)AISIN SEIKI KABUSHIKI KAISHA
Address of Applicant :1 Asahi machi 2 chome Kariya shi Aichi 4488650 Japan
(72)**Name of Inventor :**
1)YAMAGUCHI Atsushi
2)TADA Takeshi

(57) Abstract :
To provide a door locking device that can be reduced in size more than conventional door locking devices. [Solution] A door locking device according to the present invention has a key operation transmission link which transmits key operation force acting on a key cylinder to a relay lever that serves as a lock switching component in the present invention and which is positioned so as to rotate about a shared rotation axis with the relay lever enabling the door locking device to be reduced in size in comparison with conventional door locking devices in which these members rotate about separate rotation axes. Furthermore a first fan shaped protruding part which has a first movable contact part for transmitting force to the key operation transmission link and the relay lever and a second fan shaped protruding part which has a second movable contact part for transmitting force to the key operation transmission link and the relay lever are positioned around the shared rotation axis of the key operation transmission link and the relay lever enabling a reduction in the size of the door locking device because the rotation space of the first and second movable contact part fits inside the radial circular region around the shared rotation axis.

No. of Pages : 73 No. of Claims : 8

(12) PATENT APPLICATION PUBLICATION
(19) INDIA
(22) Date of filing of Application :24/10/2013
(21) Application No.8573/CHENP/2013 A
(43) Publication Date : 07/11/2014

(54) Title of the invention : POLYPROPYLENE FOR FOAM AND POLYPROPYLENE FOAM

(51) International classification :B32B5/18,C08F10/06,C08F255/02
(31) Priority Document No :11003572.2
(32) Priority Date :02/05/2011
(33) Name of priority country :EPO
(86) International Application No :PCT/EP2012/001806
Filing Date :26/04/2012
(87) International Publication No :WO 2012/150019
(61) Patent of Addition to Application Number :NA
Filing Date :NA
(62) Divisional to Application Number :NA
Filing Date :NA

(71)**Name of Applicant :**
1)BOREALIS AG
Address of Applicant :IZD Tower Wagramerstrasse 17 19 A 1220 Vienna Austria
(72)**Name of Inventor :**
1)TRAN Anh Tuan
2)KLIMKE Katja
3)BRAUN Hermann
4)FILIPE Susana

(57) Abstract :
The present invention is concerned with a polypropylene composition comprising a polypropylene base resin the polypropylene composition having a XHU content of less than 1.25 wt. %; a F30 melt strength of at least 30 cN determined in the Rheotens test at 200°C; and a melt extensibility v30 of at least 200 m/s determined in the Rheotens test at 200°C. In another aspect the present invention is concerned with a polypropylene composition having an MFR (2.16 kg 230 °C ISO 1133) of 1.0 to 5.0 g/10 min comprising a polypropylene base resin the polypropylene base resin being obtainable by producing an intermediate polypropylene having an MFR (2.16 kg 230 °C ISO 1133) of 0.5 to 2.5 g/10 min in the presence of an asymmetric catalyst; mixing the intermediate polypropylene with peroxide and at least one diene at a temperature of 20 to 90 °C for at least 2 minutes to form a pre mixed material; melt mixing the pre mixed material in a melt mixing device at a barrel temperature in the range of 180 to 300 °C whereby the melt mixing device is a melt mixing device includes a feed zone a kneading zone and a die zone whereby an initial barrel temperature T1 is maintained in the feed zone a barrel temperature T2 is maintained in the kneading zone and a die barrel temperature T3 is maintained in the die zone whereby the barrel temperatures T1 T2 and T3 satisfy the following relation: T1 < T3 < T2. In yet another aspect the present invention is concerned with a process for the production of a polypropylene composition having a XHU content of less than 1.25 wt. %; a F30 melt strength of at least 30 cN determined in the Rheotens test at 200°C; and a melt extensibility v30 of at least 200 m/s determined in the Rheotens test at 200°C whereby an asymmetric catalyst derived intermediate polypropylene having an MFR (2.16 kg 230 °C ISO 1133) of 0.5 to 2.5 g/10 min is mixed with peroxide and at least one diene at a temperature of 20 to 90 °C for at least 2 minutes to form a pre mixed material; and the pre mixed material is melt mixed in a melt mixing device at a barrel temperature in the range of 180 to 300 °C. In yet another aspect the present invention is concerned with foam comprising the polypropylene composition according to the present invention. The present invention is further concerned with the use of the polypropylene composition for producing foamed articles.

No. of Pages : 44 No. of Claims : 15

(12) PATENT APPLICATION PUBLICATION
(19) INDIA
(22) Date of filing of Application :17/09/2013
(21) Application No.7466/CHENP/2013 A
(43) Publication Date : 07/11/2014

(54) Title of the invention : MEMORY FRAGMENTS FOR SUPPORTING CODE BLOCK EXECUTION BY USING VIRTUAL CORES INSTANTIATED BY PARTITIONABLE ENGINES

(51) International classification :G06F9/06,G06F9/30,G06F12/08
(31) Priority Document No :61/467940
(32) Priority Date :25/03/2011
(33) Name of priority country :U.S.A.
(86) International Application No :PCT/US2012/030409
Filing Date :23/03/2012
(87) International Publication No:WO 2012/135050
(61) Patent of Addition to Application Number :NA
Filing Date :NA
(62) Divisional to Application Number :NA
Filing Date :NA

(71)**Name of Applicant :**
1)SOFT MACHINES INC.
Address of Applicant :3211 Scott Boulevard Suite 202 Santa Clara CA 95054 U.S.A.
(72)**Name of Inventor :**
1)ABDALLAH Mohammad

(57) Abstract :
A system for executing instructions using a plurality of memory fragments for a processor. The system includes a global front end scheduler for receiving an incoming instruction sequence wherein the global front end scheduler partitions the incoming instruction sequence into a plurality of code blocks of instructions and generates a plurality of inheritance vectors describing interdependencies between instructions of the code blocks. The system further includes a plurality of virtual cores of the processor coupled to receive code blocks allocated by the global front end scheduler wherein each virtual core comprises a respective subset of resources of a plurality of partitionable engines wherein the code blocks are executed by using the partitionable engines in accordance with a virtual core mode and in accordance with the respective inheritance vectors. A plurality memory fragments are coupled to the partitionable engines for providing data storage.

No. of Pages : 59 No. of Claims : 24

(12) PATENT APPLICATION PUBLICATION
(19) INDIA
(22) Date of filing of Application :17/09/2013
(21) Application No.7471/CHENP/2013 A
(43) Publication Date : 07/11/2014

(54) Title of the invention : METHOD APPARATUS BASE STATION AND USER EQUIPMENT FOR REDUCING INTERFERENCE IN A WIRELESS COMMUNICATION SYSTEM

(51) International classification :H04W28/16
(31) Priority Document No :201110081521.0
(32) Priority Date :31/03/2011
(33) Name of priority country :China
(86) International Application No :PCT/IB2012/000878
Filing Date :28/03/2012
(87) International Publication No :WO 2012/131498
(61) Patent of Addition to Application Number :NA
Filing Date :NA
(62) Divisional to Application Number :NA
Filing Date :NA

(71)**Name of Applicant :**
1)ALCATEL LUCENT
Address of Applicant :3 avenue Octave Grard F 75007 Paris France
(72)**Name of Inventor :**
1)ZHANG Xiaobo

(57) Abstract :
A method and apparatus a base station and user equipment for reducing interference in a wireless communication system are provide in the present invention. The wireless communication system comprises a first cell and a second cell wherein uplink/downlink sub frame configuration of the first cell and the second cell is asymmetry and may result in implementing a first type of sub frame at the first cell while implementing a second type of sub frame different from the first type of sub frame at the second cell thereby producing inter cell interference. The method comprises: mapping a resource grid of at least one of the type of sub frame and the second type of sub frame to reserve at least one of a resource element in the first type of sub frame and corresponding to a resource element in the second type of sub frame and mapped for at least one of a reference signal and a common control channel and a resource element in the second type of sub frame and corresponding to a resource element in the first type of sub frame and mapped for at least one of a reference signal and a common control channel for not transmitting information; and transmitting a mapping result of the mapping step.

No. of Pages : 35 No. of Claims : 15

(12) PATENT APPLICATION PUBLICATION
(19) INDIA
(22) Date of filing of Application :14/10/2013
(21) Application No.8288/CHENP/2013 A
(43) Publication Date : 07/11/2014

(54) Title of the invention : METHOD FOR ANALYSING THE QUALITY OF A GLASS PANEL

(51) International classification :G01N21/958,G01N21/95
(31) Priority Document No :1153514
(32) Priority Date :22/04/2011
(33) Name of priority country :France
(86) International Application No :PCT/FR2012/050757
Filing Date :06/04/2012
(87) International Publication No :WO 2012/143649
(61) Patent of Addition to Application Number :NA
Filing Date :NA
(62) Divisional to Application Number :NA
Filing Date :NA

(71)**Name of Applicant :**
1)SAINT GOBAIN GLASS FRANCE
Address of Applicant :18 Avenue dAlsace F 92400 Courbevoie France
(72)**Name of Inventor :**
1)LE MOAL Simon

(57) Abstract :
The invention relates to an analysis method which includes: a step of generating at least one digital image of a test chart (4) produced by reflection from the outer surface (2) of the glass panel on the outer side of the glass panel; a step of at least one processing unit (8) calculating representative magnitudes of the quality of the glass panel from said at least one generated image; and a step of comparing values calculated for the representative magnitudes with reference values. The test chart has a pattern which includes periodically arranged elements having closed outlines. The representative magnitudes are representative of a deformation of the image of the test chart produced by reflection from the outer surface of the glass panel on the outer side of the glass panel and the calculation of a representative magnitude includes the calculation of a density of the elements.

No. of Pages : 19 No. of Claims : 12

(12) PATENT APPLICATION PUBLICATION
(19) INDIA
(22) Date of filing of Application :25/10/2013
(21) Application No.8622/CHENP/2013 A
(43) Publication Date : 07/11/2014

(54) Title of the invention : CLASSIFICATION OF TUMOR TISSUE WITH A PERSONALIZED THRESHOLD

(51) International classification :A61B1/00,A61B5/00
(31) Priority Document No :11162815.2
(32) Priority Date :18/04/2011
(33) Name of priority country :EPO
(86) International Application No :PCT/IB2012/051742
Filing Date :10/04/2012
(87) International Publication No :WO 2012/143816
(61) Patent of Addition to Application Number :NA
Filing Date :NA
(62) Divisional to Application Number :NA
Filing Date :NA

(71)**Name of Applicant :**
1)KONINKLIJKE PHILIPS N.V.
Address of Applicant :High Tech Campus 5 NL 5656 AE Eindhoven Netherlands
(72)**Name of Inventor :**
1)LUCASSEN Gerhardus Wilhelmus
2)HENDRIKS Bernardus Hendrikus Wilhelmus
3)NACHABE Rami

(57) Abstract :
The present invention deals with discrimination of malignant tissue from normal and benign tissue in a single patient on the basis of optical spectroscopic measurements. Starting from spectroscopic measurements in normal tissue reference values are obtained for the normal class. With spectroscopic measurements in other tissues data points can be assigned to new class(es) when the spectral characteristics fall outside a threshold defining the reference class. Thresholds between different classes can also be defined. Finding (the transition to) malignant tissue is based on comparing the spectroscopic values to the classification threshold discriminating normal and benign versus malignant tissue. Thus the basis of normal spectroscopic measurements is tuned to the individual patient characteristic. Discriminating the normal plus benign and malignant from that reference is more efficient compared to the reference of the all patient database.

No. of Pages : 24 No. of Claims : 11

(12) PATENT APPLICATION PUBLICATION
(19) INDIA
(22) Date of filing of Application :17/10/2013
(21) Application No.8375/CHENP/2013 A
(43) Publication Date : 07/11/2014

(54) Title of the invention : SYSTEM FOR OPTIMIZING A PATIENT S DRUG DOSAGE REGIMEN OVER TIME

(51) International classification :G06F19/00
(31) Priority Document No :11160340.3
(32) Priority Date :30/03/2011
(33) Name of priority country :EPO
(86) International Application No :PCT/EP2012/055711
Filing Date :29/03/2012
(87) International Publication No :WO 2012/130992
(61) Patent of Addition to Application Number :NA
Filing Date :NA
(62) Divisional to Application Number :NA
Filing Date :NA

(71)**Name of Applicant :**
1)NOVO NORDISK A/S
Address of Applicant :Novo All DK 2880 Bagsv|rd Denmark
(72)**Name of Inventor :**
1)BENGTSSON Henrik

(57) Abstract :
A system for optimizing a patient s basal insulin dosage regimen over time adapted to (a) determine from blood glucose values whether and by how much to vary a patient s present recommended amount of the insulin containing drug in order to maintain the patient s future blood glucose level measurements within a predefined range and (b) at the same time display blood glucose value data and the recommended amount data as a function of time.

No. of Pages : 20 No. of Claims : 9

(12) PATENT APPLICATION PUBLICATION
(19) INDIA
(22) Date of filing of Application :23/10/2013
(21) Application No.8530/CHENP/2013 A
(43) Publication Date : 07/11/2014

(54) Title of the invention : TEMPERATURE COMPENSATION IN A CMUT DEVICE

(51) International classification :B06B1/02
(31) Priority Document No :11162282.5
(32) Priority Date :13/04/2011
(33) Name of priority country :EPO
(86) International Application No :PCT/IB2012/051719
Filing Date :06/04/2012
(87) International Publication No :WO 2012/140556
(61) Patent of Addition to Application Number :NA
Filing Date :NA
(62) Divisional to Application Number :NA
Filing Date :NA

(71)**Name of Applicant :**
1)KONINKLIJKE PHILIPS N.V.
Address of Applicant :High Tech Campus 5 NL 5656 AE Eindhoven Netherlands
(72)**Name of Inventor :**
1)DIRKSEN Peter
2)LEEUWESTEIN Adriaan

(57) Abstract :
CMUT devices are used in many applications e.g. for ultrasound imaging and pressure measurement. These devices operate by sensing a change in capacitance caused by deflection of a membrane (32) comprising one of a pair of electrodes in the device by ultrasound exposure of or pressure applied on the membrane. The CMUT device may be susceptible to the effects of changing temperature.

No. of Pages : 24 No. of Claims : 18

(12) PATENT APPLICATION PUBLICATION
(19) INDIA
(22) Date of filing of Application :23/10/2013
(21) Application No.8532/CHENP/2013 A
(43) Publication Date : 07/11/2014

(54) Title of the invention : EMBEDDED 3D MODELLING

(51) International classification :G06T7/00,A61B5/06,G06T15/20
(31) Priority Document No :11305428.2
(32) Priority Date :12/04/2011
(33) Name of priority country :EPO
(86) International Application No :PCT/IB2012/051700
Filing Date :05/04/2012
(87) International Publication No :WO 2012/140553
(61) Patent of Addition to Application Number :NA
Filing Date :NA
(62) Divisional to Application Number :NA
Filing Date :NA

(71)**Name of Applicant :**
1)KONINKLIJKE PHILIPS N.V.
Address of Applicant :High Tech Campus 5 NL 5656 AE Eindhoven Netherlands
(72)**Name of Inventor :**
1)NEMPONT Olivier Pierre
2)FLORENT Raoul
3)CATHIER Pascal Yves Fran§ois

(57) Abstract :
The present invention relates to an image processing device for guidance support a medical imaging system for providing guidance support a method for guidance support a method for operating an image processing device for guidance support as well as a computer program element and a computer readable medium. In order to provide enhanced and easily perceptible information about the actual situation it is proposed to provide (110) 3D data (112) of a region of interest of an object to provide (114) image data (116) of at least a part of the region of interest wherein a device is located at least partly within the region of interest to generate (118) a 3D model (120) of the device from the image data and to provide (122) data for a model updated 3D image (124) by embedding (126) the 3D model within the 3D data.

No. of Pages : 30 No. of Claims : 15

(12) PATENT APPLICATION PUBLICATION
(19) INDIA
(22) Date of filing of Application :29/10/2013
(21) Application No.8711/CHENP/2013 A
(43) Publication Date : 07/11/2014

(54) Title of the invention : IMMUNOSTIMULATORY OLIGODEOXYNUCLEOTIDES

(51) International classification :C12N15/117,A61K39/39,C12Q1/68
(31) Priority Document No :11167605.2
(32) Priority Date :26/05/2011
(33) Name of priority country :EPO
(86) International Application No :PCT/EP2012/059800
Filing Date :25/05/2012
(87) International Publication No :WO 2012/160184
(61) Patent of Addition to Application Number :NA
Filing Date :NA
(62) Divisional to Application Number :NA
Filing Date :NA

(71)**Name of Applicant :**
1)INTERVET INTERNATIONAL B.V.
Address of Applicant :Wim de Krverstraat 35 NL 5831 AN Boxmeer Netherlands
(72)**Name of Inventor :**
1)SCHRIER Carla Christina
2)ILG Thomas Simon

(57) Abstract :
The present invention relates to immunostimulatory oligodeoxynucleotides vectors and vaccines comprising such oligodeoxynucleotides to their use as a medicament to their use in preventing or combating infectious disease and to methods for the detection of such oligodeoxynucleotides.

No. of Pages : 33 No. of Claims : 13

(12) PATENT APPLICATION PUBLICATION
(19) INDIA
(22) Date of filing of Application :30/10/2013
(21) Application No.8713/CHENP/2013 A
(43) Publication Date : 07/11/2014

(54) Title of the invention : ELECTRICAL APPARATUS HAVING A GAS INSULATION CONTAINING A FLUORINATED COMPOUND

(51) International classification :H02B13/055
(31) Priority Document No :1154509
(32) Priority Date :24/05/2011
(33) Name of priority country :France
(86) International Application No :PCT/FR2012/000167
Filing Date :27/04/2012
(87) International Publication No :WO 2012/160266
(61) Patent of Addition to Application Number :NA
Filing Date :NA
(62) Divisional to Application Number :NA
Filing Date :NA

(71)**Name of Applicant :**
1)SCHNEIDER ELECTRIC INDUSTRIES SAS
Address of Applicant :35 rue Joseph Monier F 92500 Rueil Malmaison France
(72)**Name of Inventor :**
1)PICCOZ Daniel
2)MALADEN Romain

(57) Abstract :
The invention relates to an electrical apparatus (10) for a medium to high voltage current transport line having a gas insulation comprising: a sealed housing (12) filled with an electrically insulating gas comprising at least one fluorinated compound such as a fluoroketone at least one electrical component arranged inside the inner space of the housing (12) and a means of regulating the amount of fluoroketone inside the inner space of the housing (12). The regulating means comprise means (22 24 38) for heating a liquid (20) resulting from the condensation of fluorinated product present in the insulating gas in order to cause at least a portion of said liquid (20) to vaporize.

No. of Pages : 15 No. of Claims : 13

(12) PATENT APPLICATION PUBLICATION
(19) INDIA
(22) Date of filing of Application :30/10/2013
(21) Application No.8714/CHENP/2013 A
(43) Publication Date : 07/11/2014

(54) Title of the invention : 5H FURAN 2 ONE DERIVATIVES FOR STABILIZATION OF ORGANIC MATERIAL

(51) International classification :C08K5/1535,C08K5/151,C08K5/15
(31) Priority Document No :11164465.4
(32) Priority Date :02/05/2011
(33) Name of priority country:EPO
(86) International Application No :PCT/IB2012/052064
Filing Date :25/04/2012
(87) International Publication No :WO 2012/150527
(61) Patent of Addition to Application Number :NA
Filing Date :NA
(62) Divisional to Application Number :NA
Filing Date :NA

(71)**Name of Applicant :**
1)BASF SE
Address of Applicant :67056 Ludwigshafen Germany
(72)**Name of Inventor :**
1)Fischer Walter
2)Basbas Abdel Ilah
3)Schning Kai Uwe
4)Tartarini Cinzia
5)Hlzl Werner
6)Rotzinger Bruno

(57) Abstract :
A composition which comprises a) an organic material susceptible to oxidative thermal or light induced degradation; and b) a compound of formula I (Formula I) (I) wherein R R R R R R R R R and R are independently from each other H C C alkyl C C cycloalkyl phenyl C C alkoxy or halogen; n is 1 2 3 or 4; and when n is 1 A is C(=0) OR C(=0) N(R)(R) CN phenyl which is unsubstituted or substituted by one or more C C alkyl C C alkoxy C C cycloalkyl or halogen H or S0 phenyl; when n is 2 A is C(=0) 0 Z O C(=0) C(=0) N(R) Z N(R) C(=0) or piperazine N N biscarbonyl.

No. of Pages : 70 No. of Claims : 15

(12) PATENT APPLICATION PUBLICATION
(19) INDIA
(22) Date of filing of Application :15/10/2013
(21) Application No.8360/CHENP/2013 A
(43) Publication Date : 07/11/2014

(54) Title of the invention : SWITCH VALIDATION CIRCUIT AND METHOD

(51) International classification :A61M37/00,A61M5/168,A61M5/142
(31) Priority Document No :61/470340
(32) Priority Date :31/03/2011
(33) Name of priority country :U.S.A.
(86) International Application No :PCT/US2012/028399
Filing Date :09/03/2012
(87) International Publication No :WO 2012/134766
(61) Patent of Addition to Application Number :NA
Filing Date :NA
(62) Divisional to Application Number :NA
Filing Date :NA

(71)**Name of Applicant :**
1)INCLINE THERAPEUTICS INC.
Address of Applicant :900 Saginaw Drive Suite 200 Redwood City CA 94063 U.S.A.
(72)**Name of Inventor :**
1)LEMKE John
2)SATRE Scot
3)CHEN Corinna X.
4)READ Brian W.

(57) Abstract :
A switch operated therapeutic agent delivery device is described. Embodiments of the operated therapeutic agent delivery device include a switch that can be operated by a user a device controller connected to the switch through a switch input where the device can actuate the device when certain predetermined conditions are met and a switch integrity subcircuit which is used to detect a fault or a precursor to a fault.

No. of Pages : 49 No. of Claims : 22

(12) PATENT APPLICATION PUBLICATION
(19) INDIA
(22) Date of filing of Application :16/10/2013
(21) Application No.8361/CHENP/2013 A
(43) Publication Date : 07/11/2014

(54) Title of the invention : MANAGEMENT OF ICONS FOR DIGITAL MAPS

(51) International classification :G01C21/32,G06F17/30,G01C21/36
(31) Priority Document No :11 002 357.9
(32) Priority Date :22/03/2011
(33) Name of priority country :EPO
(86) International Application No :PCT/EP2011/005437
Filing Date :27/10/2011
(87) International Publication No :WO 2012/126492
(61) Patent of Addition to Application Number :NA
Filing Date :NA
(62) Divisional to Application Number :NA
Filing Date :NA

(71)**Name of Applicant :**
1)HARMAN BECKER AUTOMOTIVE SYSTEMS GMBH
Address of Applicant :Becker Gring Strasse 16 76307 Karlsbad Germany
(72)**Name of Inventor :**
1)SPINDLER CC
2)IVANOV Vladimir
3)FISCHER Martin
4)SCHTZ Simon

(57) Abstract :
The present invention relates to a method for the management of icons in a navigation database comprising storing data for a plurality of icons in one single data array representing an image containing the plurality of icons.

No. of Pages : 20 No. of Claims : 17

(12) PATENT APPLICATION PUBLICATION
(19) INDIA
(22) Date of filing of Application :23/10/2013
(21) Application No.8550/CHENP/2013 A
(43) Publication Date : 07/11/2014

(54) Title of the invention : PRIORITY REGISTRATION FOR IN VEHICLE EMERGENCY CALL SERVICE

(51) International classification :G08G1/127,G08G1/0967
(31) Priority Document No :61/485076
(32) Priority Date :11/05/2011
(33) Name of priority country :U.S.A.
(86) International Application No :PCT/US2012/029998
Filing Date :21/03/2012
(87) International Publication No :WO 2012/154305
(61) Patent of Addition to Application Number :NA
Filing Date :NA
(62) Divisional to Application Number :NA
Filing Date :NA

(71)**Name of Applicant :**
1)QUALCOMM INCORPORATED
Address of Applicant :Attn: International IP Administration 5775 Morehouse Drive San Diego California 92121 U.S.A.
(72)**Name of Inventor :**
1)BOURDU Jean Baptiste Bertrand
2)LEUNG Nikolai Konrad

(57) Abstract :
An eCall is an emergency call that may (i) be initiated automatically by a wireless terminal due to a trigger event (e.g. a vehicle involved in an accident) or manually by a user and (ii) include additional data sent automatically by the terminal to a recipient entity e.g. a Public Safety Answering Point (PSAP). Emergency setup signaling (e.g. an Emergency SETUP message) is used to give high priority to registering an eCall only mode In Vehicle System (IVS) on a mobile network. The IVS can get higher priority from the mobile network right after an eCall emergency is triggered at the IVS. When requesting a connection to the mobile network the IVS can use an emergency setup message instead of a conventional registration message in order to register on the network.

No. of Pages : 33 No. of Claims : 46

(12) PATENT APPLICATION PUBLICATION
(19) INDIA
(22) Date of filing of Application :23/10/2013
(21) Application No.8553/CHENP/2013 A
(43) Publication Date : 07/11/2014

(54) Title of the invention : LAMINATED FILM AND MOLDED BODY

(51) International classification :B32B27/36,B32B27/00,B32B27/40
(31) Priority Document No :2011109093
(32) Priority Date :16/05/2011
(33) Name of priority country :Japan
(86) International Application No :PCT/JP2012/061942
Filing Date :10/05/2012
(87) International Publication No :WO 2012/157500
(61) Patent of Addition to Application Number :NA
Filing Date :NA
(62) Divisional to Application Number :NA
Filing Date :NA

(71)**Name of Applicant :**
1)TORAY INDUSTRIES INC.
Address of Applicant :1 1 Nihonbashi Muromachi 2 chome Chuo ku Tokyo 1038666 Japan
(72)**Name of Inventor :**
1)MASUDA Yoshihiro
2)OSADA Syunichi
3)SONODA Kazumori
4)MIMURA Takashi

(57) Abstract :
Provided is a laminated film comprising a self curing layer that is superior in a following property at the time of molding in a self curing property and in contamination resistance. A laminated film comprises A layer on at least one side of a substrate film characterized in that A layer comprises (1) a (poly) caprolactone segment and (2) a urethane bond the contact angle of distilled water on A layer is 95° or more and less than 120° and the contact angle of diiodomethane on A layer is 70° or more and less than 87°.

No. of Pages : 50 No. of Claims : 13

(12) PATENT APPLICATION PUBLICATION
(19) INDIA
(22) Date of filing of Application :04/02/2013
(21) Application No.875/CHENP/2013 A
(43) Publication Date : 07/11/2014

(54) Title of the invention : ACOUSTIC SYSTEM

(51) International classification :H04R3/12
(31) Priority Document No :2010154858
(32) Priority Date :07/07/2010
(33) Name of priority country :Japan
(86) International Application No :PCT/JP2011/064545
Filing Date :24/06/2011
(87) International Publication No :WO 2012/005122
(61) Patent of Addition to Application Number :NA
Filing Date :NA
(62) Divisional to Application Number :NA
Filing Date :NA

(71)**Name of Applicant :**
1)SHARP KABUSHIKI KAISHA
Address of Applicant :22 22 Nagaike cho Abeno ku Osaka shi Osaka 5458522 Japan
(72)**Name of Inventor :**
1)HATTORI Hisao
2)SATO Junsei
3)NI Chanbin

(57) Abstract :
Provided is an acoustic system wherein the amount of hardware necessary for a signal processing system and amplifiers is not increased even when the number of speakers of the acoustic system is increased. Amplifiers (1a 8a) are connected to the anode and cathode terminals of each of a plurality of main speakers (1m 8m) that constitute an array speaker and each of the amplifiers are bridge driven. Sub speakers (1s 7s) for interpolating the main speakers (1m 8m) are installed in between the main speakers (1m 8m) and the anode and cathode electrodes of each of the sub speakers (1s 7s) are connected to the terminals of two adjacent main speakers (1m 8m) having the same polarity therewith. An average value of signals inputted into two adjacent main speakers is inputted into one sub speaker and that one sub speaker interpolates wavefronts radiated by the two adjacent main speakers.

No. of Pages : 57 No. of Claims : 7

(12) PATENT APPLICATION PUBLICATION
(19) INDIA
(22) Date of filing of Application :10/10/2013
(21) Application No.8215/CHENP/2013 A
(43) Publication Date : 07/11/2014

(54) Title of the invention : WIND TURBINE BLADE HAVING A ROOT REGION WITH ELONGATED FASTENING MEMBERS PROVIDED WITH METAL FIBRES

(51) International classification :B29C70/86,F01D5/28,F03D1/06
(31) Priority Document No :11161892.2
(32) Priority Date :11/04/2011
(33) Name of priority country :EPO
(86) International Application No :PCT/EP2012/056532
Filing Date :11/04/2012
(87) International Publication No :WO 2012/140048
(61) Patent of Addition to Application Number :NA
Filing Date :NA
(62) Divisional to Application Number :NA
Filing Date :NA

(71)**Name of Applicant :**
1)LM WP PATENT HOLDING A/S
Address of Applicant :Jupitervej 6 DK 6000 Kolding Denmark
(72)**Name of Inventor :**
1)DAHL Martin
2)MORTENSEN Bjarne Krab
3)HORNBLOW Benjamin

(57) Abstract :
A wind turbine blade for a wind turbine is a shell structure of a fibre reinforced composite and comprises a root region and an airfoil region. The root region has a ring shaped cross section and comprises a plurality of elongated bushings 7 with an inner thread 22 and which are embedded interspaced in the fibre reinforced polymer so as to substantially follow the circumference of the root region and allow access from the outside to the inner threads 22. Each bushing 7 is provided with metal fibres 13 a first end 201 thereof being firmly fixed to the bushing. The remaining portion of 203 of the metal fibres extends from the bushing 7 and is embedded in the polymer matrix of the fibre reinforced composite.

No. of Pages : 36 No. of Claims : 15

(12) PATENT APPLICATION PUBLICATION
(19) INDIA
(22) Date of filing of Application :10/10/2013
(21) Application No.8217/CHENP/2013 A
(43) Publication Date : 07/11/2014

(54) Title of the invention : NON PORTED GENERIC DEVICE (SOFTWARE MANAGED GENERIC DEVICE)

(51) International classification :G06F13/42
(31) Priority Document No :61/481047
(32) Priority Date :29/04/2011
(33) Name of priority country :U.S.A.
(86) International Application No :PCT/US2012/035446
Filing Date :27/04/2012
(87) International Publication No :WO 2012/149311
(61) Patent of Addition to Application Number :NA
Filing Date :NA
(62) Divisional to Application Number :NA
Filing Date :NA

(71)**Name of Applicant :**
1)QUALCOMM INCORPORATED
Address of Applicant :Attn: International IP Administration 5775 Morehouse Drive San Diego California 92121 U.S.A.
(72)**Name of Inventor :**
1)GRUBER Hans Georg
2)ARCEO Julio
3)HARIHARAN Magesh
4)MOHAN Suren
5)LANDGUTH Mark A.

(57) Abstract :
Techniques are disclosed for utilizing a non ported generic device (NGD) or other non ported hardware to couple processing device(s) to access components on a serial data bus without the need for integrated manager hardware. Using the NGD a processing device(s) can utilize available unused bandwidth on the serial data bus to communicate with components coupled with the serial data bus including a processing device having the manager hardware. Various alterations and embodiments are disclosed.

No. of Pages : 36 No. of Claims : 48

(12) PATENT APPLICATION PUBLICATION
(19) INDIA
(22) Date of filing of Application :10/10/2013
(21) Application No.8219/CHENP/2013 A
(43) Publication Date : 07/11/2014

(54) Title of the invention : METHOD FOR TREATING IFNALPHA RELATED CONDITIONS

(51) International classification :A61K38/21,A61K39/00
(31) Priority Document No :11305408.4
(32) Priority Date :07/04/2011
(33) Name of priority country :EPO
(86) International Application No :PCT/EP2012/056238
Filing Date :04/04/2012
(87) International Publication No :WO 2012/136739
(61) Patent of Addition to Application Number :NA
Filing Date :NA
(62) Divisional to Application Number :NA
Filing Date :NA

(71)**Name of Applicant :**
1)NEOVACS
Address of Applicant :3 5 impasse Reille F 75014 Paris France
(72)**Name of Inventor :**
1)GROUARD VOGEL Graldine
2)DHELLIN Olivier
3)FANGET Bernard
4)VANDEPAPELIˆRE Pierre
5)ROUCAIROL Camille

(57) Abstract :
The present invention relates to an immunogenic product comprising IFNa coupled to a carrier protein molecule that is capable to induce in vivo anti IFNa antibodies and its use for treating IFNa related conditions.

No. of Pages : 62 No. of Claims : 16

(12) PATENT APPLICATION PUBLICATION
(19) INDIA
(22) Date of filing of Application :24/10/2013
(21) Application No.8585/CHENP/2013 A
(43) Publication Date : 07/11/2014

(54) Title of the invention : CABLE TERMINATION DEVICE

(51) International classification :H02G15/04
(31) Priority Document No :102011016459.6
(32) Priority Date :08/04/2011
(33) Name of priority country :Germany
(86) International Application No :PCT/EP2012/001505
Filing Date :03/04/2012
(87) International Publication No :WO 2012/136367
(61) Patent of Addition to Application Number :NA
Filing Date :NA
(62) Divisional to Application Number :NA
Filing Date :NA

(71)**Name of Applicant :**
1)PHOENIX CONTACT GMBH & CO. KG
Address of Applicant :Flachsmarktstrae 8 32825 Blomberg Germany
(72)**Name of Inventor :**
1)FRANKE Jens
2)FELDNER Ralf
3)TNKER Manuel
4)STARKE Cord

(57) Abstract :
Cable termination device (1) having a housing (20) and an introduction opening (22) for a cable (6) in order to terminate the cable end (13) such that it is safe from contact. The housing (20) here comprises a termination cap (2) and a screw connection unit (4) interacting therewith. The introduction opening (22) is provided in the screw connection unit (4) for the purpose of accommodating at least one cable end (13). At least one latching device is provided for the purpose of latching the housing or the screw connection unit (4) to the termination cap.

No. of Pages : 24 No. of Claims : 13

(12) PATENT APPLICATION PUBLICATION
(19) INDIA
(22) Date of filing of Application :31/10/2013
(21) Application No.8774/CHENP/2013 A
(43) Publication Date : 07/11/2014

(54) Title of the invention : GROUP COMMUNICATIONS OVER EVOLVED MULTIMEDIA BROADCAST/MULTICAST SERVICES

(51) International classification :H04W76/00
(31) Priority Document No :61/491815
(32) Priority Date :31/05/2011
(33) Name of priority country :U.S.A.
(86) International Application No :PCT/US2012/040172
Filing Date :31/05/2012
(87) International Publication No :WO 2012/166893
(61) Patent of Addition to Application Number :NA
Filing Date :NA
(62) Divisional to Application Number :NA
Filing Date :NA

(71)**Name of Applicant :**
1)QUALCOMM Incorporated
Address of Applicant :Attn: International IP Administration 5775 Morehouse Drive San Diego CA 92121 U.S.A.
(72)**Name of Inventor :**
1)SONG Bongyong
2)LIN Yih Hao
3)MAGGENTI Mark
4)ANCHAN Kirankumar

(57) Abstract :
The application relates to group communications over multimedia broadcast multicast services MBMS. E MBMS services can be used to distribute multicast data to groups and could be useful in group com¬ munication systems. However in conventional E MBMS services the time to establish a new flow is on the order of 10 seconds. This laten¬ cy is unacceptable for high performance group communication sys¬ tems such as a push to talk system that requires less than 1 second from the call initiation from the originator to the granting of the floor to at least one group member. This problem is solved in that a multi¬ cast flow is pre reserved for the media flow in such a way that it can be quickly established. Furthermore another multicast flow which is always on is used as a sort of application layer paging flow in order to indicate activity on the media flow. The user equipment monitors the paging flow (Multicast flow l) regarding activity of a group com¬ munication (Call Announcement) and upon receipt of a call announce message switches to the corresponding media flow (Multicast flow 2).

No. of Pages : 37 No. of Claims : 14

(12) PATENT APPLICATION PUBLICATION
(19) INDIA
(22) Date of filing of Application :28/08/2013
(21) Application No.6937/CHENP/2013 A
(43) Publication Date : 07/11/2014

(54) Title of the invention : USE OF BROWNED GLUCOSE AS A FEED SUBSTRATE

(51) International classification :C12N1/38,C12P17/16
(31) Priority Document No :11152693.5
(32) Priority Date :31/01/2011
(33) Name of priority country :EPO
(86) International Application No :PCT/EP2012/051084
Filing Date :25/01/2012
(87) International Publication No :WO 2012/104176
(61) Patent of Addition to Application Number :NA
Filing Date :NA
(62) Divisional to Application Number :NA
Filing Date :NA

(71)**Name of Applicant :**
1)NOVOZYMES A/S
Address of Applicant :Krogshoejvej 36 DK 2880 Bagsvaerd Denmark
(72)**Name of Inventor :**
1)BANKE Niels

(57) Abstract :
A method for fermenting a microorganism producing a compound of interest in a culture medium comprising: adding a browned glucose solution to the culture medium wherein the browned glucose solution is a glucose solution that has been acid treated and heated to a temperature of at least 90 degrees Celsius and wherein the glucose solution has a concentration of at least 500 g/l.

No. of Pages : 20 No. of Claims : 15

(12) PATENT APPLICATION PUBLICATION
(19) INDIA
(22) Date of filing of Application :30/01/2013
(21) Application No.748/CHENP/2013 A
(43) Publication Date : 07/11/2014

(54) Title of the invention : NOVEL AZO COMPOUND AQUEOUS SOLUTION INK COMPOSITION INK FOR INKJET RECORDING INKJET RECORDING METHOD INK CARTRIDGE FOR INKJET RECORDING AND INKJET RECORDING

(51) International classification :C09B31/153,B41J2/01,B41M5/00
(31) Priority Document No :2010173182
(32) Priority Date :30/07/2010
(33) Name of priority country :Japan
(86) International Application No :PCT/JP2011/067194
Filing Date :28/07/2011
(87) International Publication No :WO 2012/014955
(61) Patent of Addition to Application Number :NA
Filing Date :NA
(62) Divisional to Application Number :NA
Filing Date :NA

(71)**Name of Applicant :**
1)FUJIFILM Corporation
Address of Applicant :26 30 Nishiazabu 2 chome Minato ku Tokyo 1060031 Japan
(72)**Name of Inventor :**
1)TATEISHI Keiichi
2)FUJIE Yoshihiko
3)TANAKA Shigeaki

(57) Abstract :
Provided is an aqueous solution that: contains (a) a preservative and (b) at least one of an azo compound as represented in general formula (1) or a salt thereof; and has a (b) content of 1 25 mass%. (In general formula (1) G represents a nitrogen atom or C(R)=. R represents a hydrogen atom a sulpho group a carboxy group a substituted or unsubstituted carbamoyl group or a cyano group. X X X X X X and X each independently represent a hydrogen atom or a monovalent substituted group. Y Y and Y each independently represent a hydrogen atom or a monovalent substituted group. Y Y and Y may link with each other and form a ring. Y Y and Y do not all represent a hydrogen atom at the same time. Each instance of M independently represents a hydrogen atom or a monovalent counter cation.)

No. of Pages : 113 No. of Claims : 18

(12) PATENT APPLICATION PUBLICATION
(19) INDIA
(22) Date of filing of Application :15/10/2013
(21) Application No.8323/CHENP/2013 A
(43) Publication Date : 07/11/2014

(54) Title of the invention : MOULD SIMULATOR

(51) International classification :B22D11/00,B22D2/00,G01N33/20
(31) Priority Document No :11002966.7
(32) Priority Date :08/04/2011
(33) Name of priority country :EPO
(86) International Application No :PCT/EP2012/001185
Filing Date :16/03/2012
(87) International Publication No :WO 2012/136308
(61) Patent of Addition to Application Number :NA
Filing Date :NA
(62) Divisional to Application Number :NA
Filing Date :NA

(71)**Name of Applicant :**
1)TATA STEEL NEDERLAND TECHNOLOGY B.V.
Address of Applicant :P.O. Box 10000 NL 1970 CA Ijmuiden Netherlands
(72)**Name of Inventor :**
1)SANTILLANA DE VEERMAN Maria Bego±a
2)CRUIJFF Marcel

(57) Abstract :
The invention relates to a mould simulator for simulating casting conditions in a mould for continuous casting the mould simulator comprising a sample member with a cap fitting over the outer end thereof wherein the cap is movable with respect of the sample member means to move the sample member and the cap with respect to a support frame means to move the cap with respect to the sample member means to oscillate the sample member cooling means for the sample member wherein the sample member is provided with a separate section which is movable in outward direction with respect to the sample member. This separate section allows to exert a tensile force on the metal solidified against the sample member resulting in cracks transverse and parallel to the direction of the oscillation marks on the solidified metal.

No. of Pages : 17 No. of Claims : 15

(12) PATENT APPLICATION PUBLICATION
(19) INDIA
(22) Date of filing of Application :29/10/2013
(21) Application No.8707/CHENP/2013 A
(43) Publication Date : 07/11/2014

(54) Title of the invention : APPLICATION FOR VIEWING IMAGES

(51) International classification :G06F3/048
(31) Priority Document No :61/607550
(32) Priority Date :06/03/2012
(33) Name of priority country :U.S.A.
(86) International Application No :PCT/US2013/020055
Filing Date :03/01/2013
(87) International Publication No :WO 2013/133901
(61) Patent of Addition to Application Number :NA
Filing Date :NA
(62) Divisional to Application Number :NA
Filing Date :NA

(71)**Name of Applicant :**
1)APPLE INC.
Address of Applicant :1 Infinite Loop Cupertino CA 95014 U.S.A.
(72)**Name of Inventor :**
1)UBILLOS Randy
2)CHERNA Timothy D.
3)SUN Zehang
4)ROBERTS Samuel M.
5)CUNNINGHAM Christopher R.

(57) Abstract :
Some embodiments provide an image viewing application. The image viewing application includes a first GUI for right handed users and a second GUI for left handed users. The first GUI includes an image selection window on the left side of the GUI a first set of GUI items in a first particular order from left to right and a second set of GUI items in a second particular order from left to right the second GUI includes the image selection window on the right side of the GUI the first set of GUI items in the first particular order from right to left and the second set of GUI items in the second particular order from left to right. In some embodiments the right handed GUI displays a particular tool in a first orientation while the left handed GUI displays the particular tool in a second orientation.

No. of Pages : 241 No. of Claims : 151

(12) PATENT APPLICATION PUBLICATION
(19) INDIA
(22) Date of filing of Application :06/11/2013
(21) Application No.8897/CHENP/2013 A
(43) Publication Date : 07/11/2014

(54) Title of the invention : MODULAR SOLAR RECEIVER PANELS AND SOLAR BOILERS WITH MODULAR RECEIVER PANELS

(51) International classification :F24J2/02,F24J2/24
(31) Priority Document No :13/102703
(32) Priority Date :06/05/2011
(33) Name of priority country :U.S.A.
(86) International Application No :PCT/US2012/035833
Filing Date :30/04/2012
(87) International Publication No :WO 2012/154438
(61) Patent of Addition to Application Number :NA
Filing Date :NA
(62) Divisional to Application Number :NA
Filing Date :NA

(71)**Name of Applicant :**
1)BABCOCK POWER SERVICES INC.
Address of Applicant :5 Neponset Street P.O.Box 15040 Worcester MA 01615 0040 U.S.A.
(72)**Name of Inventor :**
1)PLOTKIN Andrew
2)RANCATORE Robert
3)TOUPIN Kevin
4)RICCI Russell

(57) Abstract :
A modular panel for a solar boiler includes an inlet header an outlet header and a plurality of tubes fluidly connecting the inlet header to the outlet header. The tubes are substantially coplanar with one another forming a solar receiver surface and an opposed internal surface. The panel is modular in terms of height width number of tubes and size of tubes for improved handling of high heat flux and resultant thermally induced stresses.

No. of Pages : 30 No. of Claims : 20

(12) PATENT APPLICATION PUBLICATION
(19) INDIA
(22) Date of filing of Application :30/10/2013
(21) Application No.8716/CHENP/2013 A
(43) Publication Date : 07/11/2014

(54) Title of the invention : MULTI INPUT UNINTERRUPTIBLE POWER SUPPLY WITH AN AC VOLTAGE OUTPUT

(51) International classification :H02M7/797,H02J9/06,H02M1/10
(31) Priority Document No :61/472518
(32) Priority Date :06/04/2011
(33) Name of priority country :U.S.A.
(86) International Application No :PCT/IL2012/050129
Filing Date :05/04/2012
(87) International Publication No :WO 2012/137210
(61) Patent of Addition to Application Number :NA
Filing Date :NA
(62) Divisional to Application Number :NA
Filing Date :NA

(71)**Name of Applicant :**
1)POWER OFFER ELECTRONICS LTD.
Address of Applicant :29 Hayarkon Street 51204 Bnei Brak Israel
(72)**Name of Inventor :**
1)ZILBERBERG Ofer
2)FLAXER Eli

(57) Abstract :
An uninterruptible power supply device and method of use thereof including a multiple input source AC converter for receiving an AC input voltage and a DC input voltage an inverter including a combiner module for combining the input power sources and an AC/AC switching transformer the inverter being controlled by a controller to provide an output voltage signal the controller configured to sample the input voltage signal the switching signal current and the output voltage signal and to control the switching transformer based thereon so as to render the output voltage signal sinusoidal.

No. of Pages : 30 No. of Claims : 13

(12) PATENT APPLICATION PUBLICATION
(19) INDIA
(22) Date of filing of Application :06/11/2013

(21) Application No.8910/CHENP/2013 A
(43) Publication Date : 07/11/2014

(54) Title of the invention : SENSOR SYSTEM WITH AN EXCHANGEABLE CARTRIDGE AND A READER

(51) International classification	:G01N21/03,G01N21/55,B01L3/00
(31) Priority Document No	:11163804.5
(32) Priority Date	:27/04/2011
(33) Name of priority country	:EPO
(86) International Application No	:PCT/IB2012/051801
Filing Date	:12/04/2012
(87) International Publication No	:WO 2012/147000
(61) Patent of Addition to Application Number	:NA
Filing Date	:NA
(62) Divisional to Application Number	:NA
Filing Date	:NA

(71)**Name of Applicant :**
1)KONINKLIJKE PHILIPS N.V.
Address of Applicant :High Tech Campus 5 NL 5656 AE Eindhoven Netherlands
(72)**Name of Inventor :**
1)BEERLING Bernardus Jozef Maria
2)NIEUWENHUIS Jeroen Hans
3)VAN LANKVELT Petrus Johannes Wilhelmus
4)MEERTENS Wendela
5)ZUIDEMA Patrick

(57) Abstract :
The invention relates to a sensor system (100) comprising a reader (150) with a sensor unit (155 156) and an accommodation space(151) for an exchangeable cartridge (110). The cartridge(110) is held in said accommodation space (151) by at least one contact element (111) which has an increased thermal resistance and/or a contact area of reduced size. Thus a more homogenous temperature distribution can be achieved within the cartridge (110) reducing distortions which might adversely affect optical measurements.

No. of Pages : 19 No. of Claims : 11

(12) PATENT APPLICATION PUBLICATION
(19) INDIA
(22) Date of filing of Application :06/11/2013
(21) Application No.8911/CHENP/2013 A
(43) Publication Date : 07/11/2014

(54) Title of the invention : DISCHARGE LAMP WITH HIGH COLOR TEMPERATURE

(51) International classification :H01J61/33,H01J61/34,H01J61/82
(31) Priority Document No :11163797.1
(32) Priority Date :27/04/2011
(33) Name of priority country :EPO
(86) International Application No :PCT/IB2012/051956
Filing Date :19/04/2012
(87) International Publication No :WO 2012/147014
(61) Patent of Addition to Application Number :NA
Filing Date :NA
(62) Divisional to Application Number :NA
Filing Date :NA

(71)**Name of Applicant :**
1)KONINKLIJKE PHILIPS N.V.
Address of Applicant :High Tech Campus 5 NL 5656 AE Eindhoven Netherlands
(72)**Name of Inventor :**
1)HAACKE Michael
2)PROKESCH Bernd

(57) Abstract :
A discharge lamp comprises a discharge vessel 20 defining a sealed inner discharge space 22 with two electrodes 24. A filling consists of a rare gas and a metal halide composition and is free of mercury. The discharge vessel 20 comprises outer grooves 36 where the electrodes 24 are embedded arranged at a groove distance Ra between them. The discharge vessel 20 further comprises an inner diameter ID. In operation of the lamp an arc discharge is formed between the electrodes and the metal halide composition is partly evaporated. After operation of the lamp the metal halide composition forms a film on the inner wall of the discharge vessel 20. This film has a surface area Ameasured in mm. The metal halide composition is provided in such an amount within the discharge space 22 that a matching quotient Q calculated as Q = Ra x ID/A has a value of 2 or more such that a high colour temperature is achieved.

No. of Pages : 23 No. of Claims : 15

(12) PATENT APPLICATION PUBLICATION
(19) INDIA
(22) Date of filing of Application :06/11/2013
(21) Application No.8917/CHENP/2013 A
(43) Publication Date : 07/11/2014

(54) Title of the invention : REMOVAL OF TARGET CELLS BY CIRCULATING VIRUS SPECIFIC CYTOTOXIC T CELLS USING MHC CLASS I COMPRISING COMPLEXES

(51) International classification	:C07K16/46,A61K47/48,C07K14/705
(31) Priority Document No	:11171027.3
(32) Priority Date	:22/06/2011
(33) Name of priority country	:EPO
(86) International Application No	:PCT/EP2012/061734
Filing Date	:19/06/2012
(87) International Publication No	:WO 2012/175508
(61) Patent of Addition to Application Number	:NA
Filing Date	:NA
(62) Divisional to Application Number	:NA
Filing Date	:NA

(71)**Name of Applicant :**
1)F. HOFFMANN LA ROCHE AG
Address of Applicant :Grenzacher Strasse 124 CH 4070 Basel Switzerland
(72)**Name of Inventor :**
1)KNOETGEN Hendrik

(57) Abstract :
Herein is reported a complex comprising as first part an antibody derived part that specifically binds to a target antigen and as second part a virus derived peptide linked to a MHC class I protein complex. With the complex as reported herein existing virus specific circulating cytotoxic T cells (T memory cells or T effector cells) of an individual can be directed to cells expressing the target antigen to which the antibody derived part of the covalent complex specifically binds to by dressing these cells with a MHC class I complexes mimicking an acute viral infection. Thus one aspect as reported herein is a complex characterized in that it comprises one fusion polypeptide that comprises in N to C terminal direction either (i) a 2 microglobulin and (ii) the extracellular domains a1 a2 and a3 of a class I MHC molecule with a relative frequency of less than 1 % or (i) a virus derived peptide (ii) a 2 microglobulin and (iii) the extracellular domains a1 a2 and a3 of a class I MHC molecule with a relative frequency of 1 % or more and two polypeptide chains which are linked by one or more disulfide bonds wherein the first disulfide linked polypeptide chain comprises in N to C terminal direction (i) an immunoglobulin light or heavy chain variable domain (ii) an immunoglobulin light or heavy chain constant domain and (iii) an antibody heavy chain hinge region polypeptide and the second disulfide linked polypeptide chain comprises an antibody heavy chain hinge region polypeptide wherein the fusion polypeptide is either covalently bound either to the C terminus or the N terminus of one of the disulfide linked polypeptide chains or covalently bound to the N terminus of an antibody variable domain that is the complementary heavy or light chain variable domain to that comprised in the first disulfide linked polypeptide chain.

No. of Pages : 157 No. of Claims : 30

(12) PATENT APPLICATION PUBLICATION
(19) INDIA
(22) Date of filing of Application :18/10/2013
(21) Application No.8403/CHENP/2013 A
(43) Publication Date : 07/11/2014

(54) Title of the invention : GROUP COMMUNICATION SESSIONS THAT ARE AT LEAST PARTIALLY SUPPORTED OVER PERSONAL AREA NETWORKS IN A WIRELESS COMMUNICATIONS SYSTEM

(51) International classification :H04B7/00,H04W4/00
(31) Priority Document No :13/108245
(32) Priority Date :16/05/2011
(33) Name of priority country :U.S.A.
(86) International Application No :PCT/US2012/038222
Filing Date :16/05/2012
(87) International Publication No :WO 2012/158849
(61) Patent of Addition to Application Number :NA
Filing Date :NA
(62) Divisional to Application Number :NA
Filing Date :NA

(71)**Name of Applicant :**
1)QUALCOMM INCORPORATED
Address of Applicant :Attn: International IP Administration 5775 Morehouse Drive San Diego CA 92121 U.S.A.
(72)**Name of Inventor :**
1)ANCHAN Kirankumar

(57) Abstract :
In an embodiment an application server receives a request to initiate a group communication session (GCS) over a Wireless Wide Area Network (WWAN) with a communication group. The application server obtains location information of a set of devices participating in the GCS and determines that the GCS can be supported between the set of devices via a Personal Area Network (PAN) after which the application server transitions support for the GCS from the WWAN to the PAN. In another embodiment an originator begins a periodic broadcast of a local PAN signal announcing the GCS after failing to set up the GCS via the WWAN. Target device(s) in the communication group receive the local PAN signal determine not to transmit their own local PAN signal and then convey a session acceptance message to the originator. The GCS is then established between the target device(s) and the originator over the PAN.

No. of Pages : 68 No. of Claims : 46

(12) PATENT APPLICATION PUBLICATION
(19) INDIA
(22) Date of filing of Application :25/10/2013
(21) Application No.8592/CHENP/2013 A
(43) Publication Date : 07/11/2014

(54) Title of the invention : LOW SIDELOBE REFLECTOR ANTENNA

(51) International classification :H01Q15/16,H01Q19/10
(31) Priority Document No :13/224066
(32) Priority Date :01/09/2011
(33) Name of priority country :U.S.A.
(86) International Application No :PCT/US2012/041884
Filing Date :11/06/2012
(87) International Publication No :WO 2013/032557
(61) Patent of Addition to Application Number :NA
Filing Date :NA
(62) Divisional to Application Number :NA
Filing Date :NA

(71)**Name of Applicant :**
1)ANDREW LLC
Address of Applicant :1100 CommScope Place SE Hickory North Carolina 28602 U.S.A.
(72)**Name of Inventor :**
1)SIMMS Stephen
2)BRANDAU Ronald
3)SYED Junaid
4)COLE Douglas John
5)HILLS Christopher

(57) Abstract :
A front feed reflector antenna with a dish reflector has a reflector focal length to reflector diameter ratio of less than 0.25. A wave guide is coupled to a proximal end of the dish reflector projecting into the dish reflector along a longitudinal axis. A dielectric block is coupled to a distal end of the waveguide and a sub reflector is coupled to a distal end of the dielectric block. A shield is coupled to the periphery of the dish reflector. The sub reflector diameter is dimensioned to be 2.5 wavelengths or more of a desired operating frequency.

No. of Pages : 39 No. of Claims : 20

(12) PATENT APPLICATION PUBLICATION
(19) INDIA
(22) Date of filing of Application :31/10/2013
(21) Application No.8787/CHENP/2013 A
(43) Publication Date : 07/11/2014

(54) Title of the invention : CONTRAST ENHANCED MAGNETIC RESONANCE ANGIOGRAPHY WITH CHEMICAL SHIFT ENCODING FOR FAT SUPPRESSION

(51) International classification :G01R33/54,G01R33/561,G01R33/56
(31) Priority Document No :11163418.4
(32) Priority Date :21/04/2011
(33) Name of priority country :EPO
(86) International Application No :PCT/IB2012/051902
Filing Date :17/04/2012
(87) International Publication No :WO 2012/143847
(61) Patent of Addition to Application Number :NA
Filing Date :NA
(62) Divisional to Application Number :NA
Filing Date :NA

(71)**Name of Applicant :**
1)KONINKLIJKE PHILIPS N.V.
Address of Applicant :High Tech Campus 5 NL 5656 AE Eindhoven Netherlands
(72)**Name of Inventor :**
1)GEERTS OSSEVOORT Liesbeth
2)KOOIJMAN Hendrik
3)ALBERTS Eveline
4)EGGERS Holger

(57) Abstract :
The invention relates to a method of performing contrast enhanced first pass magnetic resonance angiography the method comprising: acquiring (302) magnetic resonance datasets of a region of interest using a single or multi echo data acquisition technique wherein the echo times of the one or multiple echoes are flexible wherein at the time of the data acquisition the region of interest comprises fat water and a contrast agent processing (304) the datasets using a generalized Dixon water fat separation technique to eliminate the signal originating from the fat from the background for reconstruction of an image data set.

No. of Pages : 23 No. of Claims : 7

(12) PATENT APPLICATION PUBLICATION
(19) INDIA
(22) Date of filing of Application :11/11/2013
(21) Application No.9037/CHENP/2013 A
(43) Publication Date : 07/11/2014

(54) Title of the invention : METHOD AND APPARATUS FOR TRANSMITTING ENCRYPTED LOCATION INFORMATION

(51) International classification :H04W4/02,H04L29/06,H04W12/02
(31) Priority Document No :13/100861
(32) Priority Date :04/05/2011
(33) Name of priority country:U.S.A.
(86) International Application No :PCT/US2012/036200
Filing Date :02/05/2012
(87) International Publication No :WO 2012/151335
(61) Patent of Addition to Application Number :NA
Filing Date :NA
(62) Divisional to Application Number :NA
Filing Date :NA

(71)**Name of Applicant :**
1)QUALCOMM INCORPORATED
Address of Applicant :Attn: International Ip Administration 5775 Morehouse Drive San Diego CA 92121 U.S.A.
(72)**Name of Inventor :**
1)PADDON Michael W.
2)BROWN Craig M.
3)NORTHWAY Craig W.
4)PURSER Jessica M.

(57) Abstract :
Systems and methods are described for performing bulk transmissions of information (e.g. emergency information etc.) while preserving user privacy. An example mobile device described herein includes an information aggregation module configured to compile first information associated with the device the first information including location related information an encryption module communicatively coupled to the information aggregation module and configured to encrypt the first information using at least one session key and a transmitter communicatively coupled to the encryption module and configured to transmit encrypted first information to at least one receiver prior to a triggering event and to transmit the at least one session key to the at least one receiver after the triggering event.

No. of Pages : 31 No. of Claims : 48

(12) PATENT APPLICATION PUBLICATION
(19) INDIA
(22) Date of filing of Application :22/10/2013
(21) Application No.8452/CHENP/2013 A
(43) Publication Date : 07/11/2014

(54) Title of the invention : WRITING DATA TO TAPE STORAGE MEDIUM

(51) International classification :G11C7/00
(31) Priority Document No :11166083.3
(32) Priority Date :13/05/2011
(33) Name of priority country :EPO
(86) International Application No :PCT/IB2012/052045
Filing Date :24/04/2012
(87) International Publication No :WO 2012/156840
(61) Patent of Addition to Application Number :NA
Filing Date :NA
(62) Divisional to Application Number :NA
Filing Date :NA

(71)**Name of Applicant :**
1)INTERNATIONAL BUSINESS MACHINES CORPORATION
Address of Applicant :New Orchard Road Armonk NY 10504 U.S.A.
(72)**Name of Inventor :**
1)CIDECIYAN Roy Daron
2)FURRER Simeon

(57) Abstract :
A method for writing data to a tape storage medium includes: writing first user data to a first physical region (11) of the tape storage medium (1) in a first write mode writing second user data to a second physical region (12) of the tape storage medium (1) in a second write mode wherein the second write mode differs from the first write mode. An apparatus for writing data to a tape storage medium a tape storage medium a tape cartridge are also provided.

No. of Pages : 27 No. of Claims : 18

(12) PATENT APPLICATION PUBLICATION
(19) INDIA
(22) Date of filing of Application :22/10/2013
(21) Application No.8453/CHENP/2013 A
(43) Publication Date : 07/11/2014

(54) Title of the invention : CYLINDER LUBRICANT FOR A TWO STROKE MARINE ENGINE

(51) International classification :C10M163/00,C10N40/26,C10N30/06
(31) Priority Document No :11 53276
(32) Priority Date :14/04/2011
(33) Name of priority country :France
(86) International Application No :PCT/EP2012/056812
Filing Date :13/04/2012
(87) International Publication No :WO 2012/140215
(61) Patent of Addition to Application Number :NA
Filing Date :NA
(62) Divisional to Application Number :NA
Filing Date :NA

(71)**Name of Applicant :**
1)TOTAL MARKETING SERVICES
Address of Applicant :24 Cours Michelet F 92800 Puteaux France
(72)**Name of Inventor :**
1)LANCON Denis
2)DOYEN Valrie

(57) Abstract :
The present invention relates to a cylinder lubricant having a BN determined according to the ASTM D 2896 standard of at least 15 milligrams of potassium hydroxide per gram of lubricant comprising: (a) one or more lubricating base oils for a marine engine (b) at least one detergent based on alkali or alkaline earth metals which detergent is overbased by metal carbonate salts (c) at least one neutral detergent (d) one or more alkoxylated fatty amines soluble in the oil and having a BN determined according to the ASTM D 2896 standard of between 100 and 600 milligrams of potassium hydroxide per gram where the weight percentage of alkoxylated fatty amines with respect to the total weight of lubricant is chosen so that the BN provided by these compounds represents a contribution of between of 2 and 8 milligrams of potassium hydroxide per gram of lubricant and where the BN provided by the metal carbonate salts represents a contribution of at most 65% of the total BN measured according to the ASTM D 2896 standard of said cylinder lubricant. Said lubricant has a sufficient neutralizing power with respect to the sulphuric acid formed during the combustion of fuels having a high sulphur content while limiting the formation of deposits during the use of fuels having a low sulphur content. Its thermal resistance and its anti wear properties are improved.

No. of Pages : 42 No. of Claims : 22

(12) PATENT APPLICATION PUBLICATION
(19) INDIA
(22) Date of filing of Application :18/10/2013
(21) Application No.8459/CHENP/2013 A
(43) Publication Date : 07/11/2014

(54) Title of the invention : METHOD AND SYSTEM FOR REDUCING THERMAL LOAD BY MONITORING AND CONTROLLING CURRENT FLOW IN A PORTABLE COMPUTING DEVICE

(51) International classification :G06F1/20,G06F1/32
(31) Priority Document No :61/478653
(32) Priority Date :25/04/2011
(33) Name of priority country :U.S.A.
(86) International Application No :PCT/US2012/033340
Filing Date :12/04/2012
(87) International Publication No :WO 2012/148691
(61) Patent of Addition to Application Number :NA
Filing Date :NA
(62) Divisional to Application Number :NA
Filing Date :NA

(71)**Name of Applicant :**
1)QUALCOMM INCORPORATED
Address of Applicant :Attn: International IP Administration 5775 Morehouse Drive San Diego California 92121 U.S.A.
(72)**Name of Inventor :**
1)ANDERSON Jon J.
2)GOOD Gary D.

(57) Abstract :
A method and system for reducing thermal load by monitoring and controlling current flow in a portable computing device (PCD) are disclosed. The method includes monitoring a temperature of the PCD and determining if the temperature has reached a temperature threshold condition. This temperature threshold condition may be comprised within any one or more of a plurality of thermal policy states in which each thermal policy state may dictate various thermal mitigation techniques. The thermal policy states may be associated with values that may indicate thermal loading of a PCD. If the temperature has reached the first threshold condition then electrical current exiting a power supply device may be monitored. If it is determined that the electrical current has exceeded a current threshold condition such as a maximum current a hardware device corresponding to the electrical current may be selected for application of a thermal mitigation technique.

No. of Pages : 53 No. of Claims : 40

(12) PATENT APPLICATION PUBLICATION
(19) INDIA
(22) Date of filing of Application :11/11/2013
(21) Application No.9042/CHENP/2013 A
(43) Publication Date : 07/11/2014

(54) Title of the invention : METHOD AND CONTROLLER FOR PROTECTING A VOLTAGE SOURCE CONVERTER

(51) International classification :H02M7/483,H02M1/32
(31) Priority Document No :NA
(32) Priority Date :NA
(33) Name of priority country :NA
(86) International Application No :PCT/EP2011/060927
Filing Date :29/06/2011
(87) International Publication No :WO 2013/000513
(61) Patent of Addition to Application Number :NA
Filing Date :NA
(62) Divisional to Application Number :NA
Filing Date :NA

(71)**Name of Applicant :**
1)ABB TECHNOLOGY AG
Address of Applicant :Affolternstrasse 44 CH 8050 Z¼rich Switzerland
(72)**Name of Inventor :**
1)HASLER Jean Philippe
2)MONGE Mauro
3)DE OLIVEIRA Marcio

(57) Abstract :
The invention relates to a method and a controller (8) for protection of a voltage source converter (1) comprising one or more phases (L1 L2 L3) each phase comprising one or more series connected converter cells (2 1L1 2 2L1 ... 2 nL1; 3 1L2 3 2L2 ... 3 nL2 : 4 1L3 4 2L3 ... 4 nL3). Each converter cell comprises a by pass switch (S 1L1 S 2L1 ... S nL1; S 1L2 S 2L2 ... S nL2; S 1L3 S 2L3 ... S nL3) for enabling by pass thereof. The method comprises the steps of: detecting an over voltage condition and controlling simultaneously the by pass switches of each converter cell so as to bypass the converter cells upon detection of such over voltage condition.

No. of Pages : 22 No. of Claims : 13

(12) PATENT APPLICATION PUBLICATION
(19) INDIA
(22) Date of filing of Application :18/10/2013
(21) Application No.8425/CHENP/2013 A
(43) Publication Date : 07/11/2014

(54) Title of the invention : INTRAOCULAR LENS DESIGN METHOD AND INTRAOCULAR LENS

(51) International classification :A61F2/16
(31) Priority Document No :2011083766
(32) Priority Date :05/04/2011
(33) Name of priority country :Japan
(86) International Application No :PCT/JP2012/059018
Filing Date :02/04/2012
(87) International Publication No :WO 2012/137748
(61) Patent of Addition to Application Number :NA
Filing Date :NA
(62) Divisional to Application Number :NA
Filing Date :NA

(71)**Name of Applicant :**
1)KOWA COMPANY LTD.
Address of Applicant :6 29 Nishiki 3 chome Naka ku Nagoya shi Aichi 4608625 Japan
(72)**Name of Inventor :**
1)SUZUKI Takayoshi
2)ISHIKAWA Haruo

(57) Abstract :
Provided is a technique which in the design of intraocular lenses simplifies design work and makes it possible for aberration of the entire eyeball to more precisely match a target value when the designed intraocular lens is inserted into a patient s eye. This intraocular lens design method involves deriving an intraocular lens aberration target value from the aberration of the cornea and anterior chamber and a set value of the total eyeball aberration (S102) and determining an intraocular lens shape such that the at least the aberration of the intraocular lens coincides with the target value (S103 S107). The intraocular lens aberration is set to an intraocular lens aberration for which prescribed convergent light is incident to the intraocular lens (S104).

No. of Pages : 33 No. of Claims : 6

(12) PATENT APPLICATION PUBLICATION
(19) INDIA
(22) Date of filing of Application :31/10/2013
(21) Application No.8807/CHENP/2013 A
(43) Publication Date : 07/11/2014

(54) Title of the invention : METHOD FOR PREPARING FC CONTAINING POLYPEPTIDES HAVING IMPROVED PROPERTIES

(51) International classification :C07K16/00,C12P21/00
(31) Priority Document No :61/489743
(32) Priority Date :25/05/2011
(33) Name of priority country :U.S.A.
(86) International Application No :PCT/US2012/038915
Filing Date :22/05/2012
(87) International Publication No :WO 2012/162277
(61) Patent of Addition to Application Number :NA
Filing Date :NA
(62) Divisional to Application Number :NA
Filing Date :NA

(71)**Name of Applicant :**
1)MERCK SHARP & DOHME CORP.
Address of Applicant :126 East Lincoln Avenue Rahway New Jersey 07065 0907 U.S.A.
(72)**Name of Inventor :**
1)ZHA Dongxing

(57) Abstract :
The present invention is directed to methods and compositions for the production of Fc containing polypeptides comprising mutations at positions 243 264 267 and 328 of the Fc region.

No. of Pages : 109 No. of Claims : 21

(12) PATENT APPLICATION PUBLICATION
(19) INDIA
(22) Date of filing of Application :11/11/2013
(21) Application No.9010/CHENP/2013 A
(43) Publication Date : 07/11/2014

(54) Title of the invention : OPTIMIZATION OF CIRCULATION OF FLUID IN AN ALGAE CULTIVATION POND

(51) International classification :F04F5/54,F04F5/46
(31) Priority Document No :13/098338
(32) Priority Date :29/04/2011
(33) Name of priority country :U.S.A.
(86) International Application No :PCT/US2012/035290
Filing Date :26/04/2012
(87) International Publication No :WO 2012/149214
(61) Patent of Addition to Application Number :NA
Filing Date :NA
(62) Divisional to Application Number :NA
Filing Date :NA

(71)**Name of Applicant :**
1)AURORA ALGAE INC.
Address of Applicant :3325 Investment Boulevard Hayward CA 94545 U.S.A.
(72)**Name of Inventor :**
1)PARSHEH Mehran
2)RADAELLI Guido

(57) Abstract :
Algae cultivation ponds having the circulation of fluid optimized for such factors as decreased energy consumption decreased predators/competitors decreased or eliminated flow deadzones (i.e. stagnant regions) and increased algae biomass production such as for the production of biofuels and other algae based products. A first pond bottom may underlie the expansion zone. An exterior wall may form an angle with the first pond bottom of approximately ninety to greater than one hundred sixty degrees. A second pond bottom adjacent to the first pond bottom may have an approximately consistent ground elevation approximately matching a lowermost ground elevation of the first pond bottom. Additionally the second pond bottom may extend outward from the first pond bottom. The vane in the expansion zone may extend to a point above the second pond bottom.

No. of Pages : 31 No. of Claims : 20

(12) PATENT APPLICATION PUBLICATION
(19) INDIA
(22) Date of filing of Application :11/11/2013
(21) Application No.9013/CHENP/2013 A
(43) Publication Date : 07/11/2014

(54) Title of the invention : METHOD OF DETECTING GENERATION OF TRANSMISSION SIGNAL USING CODE SEQUENCE COMMUNICATION SYSTEM AND MEASURING SYSTEM

(51) International classification :H04J11/00,H04J13/16
(31) Priority Document No :2011086939
(32) Priority Date :11/04/2011
(33) Name of priority country :Japan
(86) International Application No :PCT/JP2012/059943
Filing Date :11/04/2012
(87) International Publication No :WO 2012/141227
(61) Patent of Addition to Application Number :NA
Filing Date :NA
(62) Divisional to Application Number :NA
Filing Date :NA

(71)**Name of Applicant :**
1)Nippon Techno Resources Inc.
Address of Applicant :2 49 7 Minami Ikebukuro Toshima ku Tokyo 1710022 Japan
(72)**Name of Inventor :**
1)ASAHINA Tadashi

(57) Abstract :
The present invention provides a transmission method which generates and sends a transmission signal generated from a multiplexing OFDM signal or a multiplexing wavelet OFDM signal employing a multiplexing spread chip sequence in which a chip of a code sequence for spread and a code sequence for combination and a chip of a code sequence for localization are multiplied and multiplexed and a receiving method which makes a high SN ratio improvement rate possible by converting the received signal to a frequency domain to acquire the multiplexing spread chip sequence and by performing de spreading and localizing processing to detect a localized pulse. According to the data transmission using the transmission and receiving method data is mapped into a code sequence and the receiving side can detect the data as the kind of code sequence the shift time of a localized pulse and the polarity at a high SN ratio improvement rate. Further when used in a measuring system the transmission and receiving method can obtain information associated with an object to be measured on the basis of the aspect and the characteristics of a localized pulse by calculating the localized pulse from a signal detected from the object to be measured at a high SN ratio improvement rate.

No. of Pages : 88 No. of Claims : 26

(12) PATENT APPLICATION PUBLICATION
(19) INDIA
(22) Date of filing of Application :29/10/2013
(21) Application No.8686/CHENP/2013 A
(43) Publication Date : 07/11/2014

(54) Title of the invention : GESTURE BASED CONTROL OF ELEMENT OR ITEM

(51) International classification :G06F3/01,G06F3/048
(31) Priority Document No :11163125.5
(32) Priority Date :20/04/2011
(33) Name of priority country :EPO
(86) International Application No :PCT/IB2012/051810
Filing Date :13/04/2012
(87) International Publication No :WO 2012/143829
(61) Patent of Addition to Application Number :NA
Filing Date :NA
(62) Divisional to Application Number :NA
Filing Date :NA

(71)**Name of Applicant :**
1)KONINKLIJKE PHILIPS N.V.
Address of Applicant :High Tech Campus 5 NL 5656 AE Eindhoven Netherlands
(72)**Name of Inventor :**
1)GEURTS Lucas Jacobus Franciscus
2)KAUFHOLZ Paul
3)STERKEN Hendrikus Petrus Maria
4)KNOESTER Jaap
5)STUYFZAND Ivo Don

(57) Abstract :
Apparatuses (1) for controlling elements (40 70) possibly shown on screens (31) or items (71) possibly represented by the elements (70) comprise detectors (11 13) for detecting features of objects (2) such as body parts in first and second dimensions and converters (14) for converting first features into actions for the elements (40 70) or the items (71). By making the actions dependent on second features a number of possibilities is increased. First features may be movements of the objects (2) and second features may be absolute or relative positions of the objects (2). First dimensions may be parallel to the screens (31) and second dimensions may be perpendicular or parallel to the screens (31) or vice versa. Actions may comprise browsing groups (4 6) of elements (40 69) at position dependent speeds or browsing one or more groups (4 6) depending on the positions. The items (71) may be lamps appliances audio players video players whereby their parameters may be adjusted in dependence of the movements and the positions.

No. of Pages : 19 No. of Claims : 15

(12) PATENT APPLICATION PUBLICATION
(19) INDIA
(22) Date of filing of Application :29/10/2013
(21) Application No.8691/CHENP/2013 A
(43) Publication Date : 07/11/2014

(54) Title of the invention : MICRO ELECTRO MECHANICAL SYSTEM (MEMS) AND RELATED ACTUATOR BUMPS METHOD OF MANUFACTURE AND DESIGN STRUCTURES

(51) International classification :H02N1/00,H05K13/00
(31) Priority Document No :13/164331
(32) Priority Date :20/06/2011
(33) Name of priority country :U.S.A.
(86) International Application No :PCT/US2012/029005
Filing Date :14/03/2012
(87) International Publication No :WO 2012/177304
(61) Patent of Addition to Application Number :NA
Filing Date :NA
(62) Divisional to Application Number :NA
Filing Date :NA

(71)**Name of Applicant :**
1)INTERNATIONAL BUSINESS MACHINES CORPORATION
Address of Applicant :New Orchard Road Armonk NY 10504 U.S.A.
(72)**Name of Inventor :**
1)JAHNES Christopher V.
2)STAMPER Anthony K.

(57) Abstract :
Micro Electro Mechanical System (MEMS) structures methods of manufacture and design structures are provided. The method of forming a MEMS structure includes forming fixed actuator electrodes (115) and a contact point on a substrate. The method further includes forming a MEMS beam (100) over the fixed actuator electrodes and the contact point. The method further includes forming an array of actuator electrodes (105) in alignment with portions of the fixed actuator electrodes which are sized and dimensioned to prevent the MEMS beam from collapsing on the fixed actuator electrodes after repeating cycling. The array of actuator electrodes are formed in direct contact with at least one of an underside of the MEMS beam and a surface of the fixed actuator electrodes.

No. of Pages : 65 No. of Claims : 25

(12) PATENT APPLICATION PUBLICATION
(19) INDIA
(22) Date of filing of Application :29/10/2013
(21) Application No.8694/CHENP/2013 A
(43) Publication Date : 07/11/2014

(54) Title of the invention : CERAMIC PRINTED CIRCUIT BOARD COMPRISING AN AL COOLING BODY

(51) International classification :H01L23/367,H01L23/373,F21V29/00
(31) Priority Document No :10 2011 006 726.4
(32) Priority Date :04/04/2011
(33) Name of priority country :Germany
(86) International Application No :PCT/EP2012/055746
Filing Date :30/03/2012
(87) International Publication No :WO 2012/136579
(61) Patent of Addition to Application Number :NA
Filing Date :NA
(62) Divisional to Application Number :NA
Filing Date :NA

(71)**Name of Applicant :**
1)CERAMTEC GMBH
Address of Applicant :CeramTec Platz 1 9 73207 Plochingen Germany
(72)**Name of Inventor :**
1)DOHN Alexander
2)THIMM Alfred

(57) Abstract :
The invention relates to a ceramic printed circuit board (2) comprising an upper side (2a) and a lower side (2b) sintered metallisation regions being arranged on the upper side (2a) and the lower side being embodied as a cooling body (3). In order to improve the heat dissipation of components on the upper side of the printed circuit board the lower side (2b) is also provided with sintered metallisation regions to which a metal cooling body (3) is soldered.

No. of Pages : 11 No. of Claims : 10

(12) PATENT APPLICATION PUBLICATION
(19) INDIA
(22) Date of filing of Application :13/11/2013
(21) Application No.9092/CHENP/2013 A
(43) Publication Date : 07/11/2014

(54) Title of the invention : HEAT TRANSFER SYSTEM

(51) International classification :F28D15/04,F28D15/02
(31) Priority Document No :1058185
(32) Priority Date :08/10/2010
(33) Name of priority country :France
(86) International Application No :PCT/EP2011/067406
Filing Date :05/10/2011
(87) International Publication No :WO 2012/045784
(61) Patent of Addition to Application Number :NA
Filing Date :NA
(62) Divisional to Application Number :NA
Filing Date :NA

(71)**Name of Applicant :**
1)ASTRIUM SAS
Address of Applicant :6 rue Laurent Pichat F 75016 Paris France
(72)**Name of Inventor :**
1)FIGUS Christophe

(57) Abstract :
The invention relates to a heat transfer system (34) comprising one main capillary pumped diphasic fluid loop (40) and a secondary capillary pumped diphasic fluid loop (50) suitable for cooling at least one hot source (6) the main fluid loop (40) and the secondary fluid loop (50) comprising one evaporator (404 504) a vapour pipe (412 512) capable of conveying the cooling fluid in the vapour state from the evaporator (404 504) to a condenser (408 508) a condenser (408 508) and a liquid pipe (418 518) capable of conveying the cooling fluid in the liquid state from the condenser (408 508) to the evaporator (404 504); characterized in that the cooling fluid of the main fluid loop (40) is in heat exchange with the cooling fluid of the secondary fluid loop (50).

No. of Pages : 17 No. of Claims : 12

(12) PATENT APPLICATION PUBLICATION
(19) INDIA
(22) Date of filing of Application :15/10/2013
(21) Application No.8347/CHENP/2013 A
(43) Publication Date : 07/11/2014

(54) Title of the invention : SHAPE SENSING ASSISTED MEDICAL PROCEDURE

(51) International classification :A61B1/01,A61B5/06,G06T19/00
(31) Priority Document No :61/469988
(32) Priority Date :31/03/2011
(33) Name of priority country :U.S.A.
(86) International Application No :PCT/IB2012/051396
Filing Date :23/03/2012
(87) International Publication No :WO 2012/131550
(61) Patent of Addition to Application Number :NA
Filing Date :NA
(62) Divisional to Application Number :NA
Filing Date :NA

(71)**Name of Applicant :**
1)KONINKLIJKE PHILIPS N.V.
Address of Applicant :High Tech Campus 5 NL 5656 AE Eindhoven Netherlands
(72)**Name of Inventor :**
1)KLINDER Tobias
2)MANZKE Robert
3)CHAN Raymond

(57) Abstract :
A system and method for shape sensing assistance in a medical procedure includes providing (402) a three dimensional image of a distributed pathway system. A shape sensing enabled elongated device is introduced (406) into the pathway system. A shape of the elongated device in the pathway system is measured (410). The shape is compared (414) with the three dimensional image to determine whether a given path has been selected relative to a target.

No. of Pages : 22 No. of Claims : 27

(12) PATENT APPLICATION PUBLICATION
(19) INDIA
(22) Date of filing of Application :30/10/2013
(21) Application No.8728/CHENP/2013 A
(43) Publication Date : 07/11/2014

(54) Title of the invention : HINGE

(51) International classification :E05F5/00
(31) Priority Document No :10 2011 050 053.7
(32) Priority Date :03/05/2011
(33) Name of priority country :Germany
(86) International Application No :PCT/EP2012/057624
Filing Date :26/04/2012
(87) International Publication No :WO 2012/150170
(61) Patent of Addition to Application Number :NA
Filing Date :NA
(62) Divisional to Application Number :NA
Filing Date :NA

(71)**Name of Applicant :**
1)HETTICH ONI GMBH & CO. KG
Address of Applicant :Industriestrae 11 13 32602 Vlotho Germany
(72)**Name of Inventor :**
1)MTERTHIES Ralf
2)SCHUBERT Michael

(57) Abstract :
The invention relates to a hinge (1) in particular for furniture comprising a hinge part (2) which can be fixed to a door or a flap and which is held on a lateral part (3) in a pivotal manner said lateral part being fixable to a furniture body or to a frame via a mounting element (30). The hinge also comprises a damper (11) with a damper housing (12) and a piston rod (13) that can be moved relative to the damper housing (12). The damper (11) brakes a closing movement of the hinge part (2) relative to the lateral part (3) and a switching element (17) is provided by means of which the damper (11) can be deactivated. The user can thus select whether the damper is used for the respective application.

No. of Pages : 19 No. of Claims : 10

(12) PATENT APPLICATION PUBLICATION
(19) INDIA
(22) Date of filing of Application :07/11/2013

(21) Application No.8927/CHENP/2013 A
(43) Publication Date : 07/11/2014

(54) Title of the invention : DROP DISPENSER

(51) International classification :G01F11/02,G01F11/26,B05B11/00
(31) Priority Document No :10 2011 106 261.4
(32) Priority Date :18/05/2011
(33) Name of priority country :Germany
(86) International Application No :PCT/EP2012/002146
Filing Date :16/05/2012
(87) International Publication No :WO 2012/156098
(61) Patent of Addition to Application Number :NA
Filing Date :NA
(62) Divisional to Application Number :NA
Filing Date :NA

(71)**Name of Applicant :**
1)MEADWESTVACO CALMAR GMBH
Address of Applicant :Ernst Stenner Str. 17 58675 Hemer Germany
(72)**Name of Inventor :**
1)HARMS Heiko
2)WELP Gisbert

(57) Abstract :
The invention relates to a dispenser (1) for the dosed delivery of liquid media comprising a container (3) for holding a liquid medium (4) a manually operated pump (5) that is arranged on the container (3) and comprises a flood chamber (6) into which a liquid medium (4) flows when the container (3) is turned upside down for which purpose the flood chamber (6) is fluidically connected at the inlet side to an outlet opening (7) of the container (3) and in the flood chamber (6) a dosing piston (8) which is shiftable by an actuation stroke is arranged which piston discharges the dosed medium (4) wherein a media duct (9) extends through the dosing piston (8) and is broadened on the inlet side as a volumetrically specified cylinder section (10) into which an immersion piston (11) which protrudes into the flood chamber (6) engages as a pressure piston in order to discharge the medium (4) which was introduced by gravity in the cylinder section (10) of the dosing piston (8).

No. of Pages : 15 No. of Claims : 9

(12) PATENT APPLICATION PUBLICATION
(19) INDIA
(22) Date of filing of Application :14/11/2013
(21) Application No.9130/CHENP/2013 A
(43) Publication Date : 07/11/2014

(54) Title of the invention : METHODS AND APPARATUSES FOR USER EQUIPMENT BASED ENHANCEMENTS OF RADIO LINK CONTROL FOR MULTI POINT WIRELESS TRANSMISSION

(51) International classification :H04L1/18
(31) Priority Document No :61/494328
(32) Priority Date :07/06/2011
(33) Name of priority country :U.S.A.
(86) International Application No :PCT/US2012/041405
Filing Date :07/06/2012
(87) International Publication No :WO 2012/170724
(61) Patent of Addition to Application Number :NA
Filing Date :NA
(62) Divisional to Application Number :NA
Filing Date :NA

(71)**Name of Applicant :**
1)QUALCOMM Incorporated
Address of Applicant :Attn: International IP Administration 5775 Morehouse Drive San Diego California 92121 U.S.A.
(72)**Name of Inventor :**
1)ZHANG Danlu
2)GE Weiyan
3)KAPOOR Rohit
4)MOHANTY Bibhu Prasad

(57) Abstract :
In aspects of the present disclosure a user equipment receives inter NodeB multi point transmissions and a multipoint aggregation component detects a gap in the sequence numbers delays transmitting a not acknowledged signal (NAK) by starting a NAK delay timer and transmits by a transceiver NAK for the gap in sequence numbers in response to the NAK delay timer expiring and detecting that the gap has not been filled during the delaying. If the Medium Access Control (MAC) entity as the respective NodeB identifies itself to the Radio Link Control (RLC) out of order delivery (skew) can eventually be distinguished from genuine data loss before the NAK delay timer expires based upon tracking the highest sequence numbers received. Adaptive NAK delay timer can be performed by monitoring skew duration.

No. of Pages : 41 No. of Claims : 11

(12) PATENT APPLICATION PUBLICATION
(19) INDIA
(22) Date of filing of Application :03/10/2013
(21) Application No.7997/CHENP/2013 A
(43) Publication Date : 07/11/2014

(54) Title of the invention : METHOD AND SYSTEM TO DIAGNOSE CENTRAL SLEEP APNEA

(51) International classification :A61B5/08
(31) Priority Document No :61/453253
(32) Priority Date :16/03/2011
(33) Name of priority country :U.S.A.
(86) International Application No :PCT/IB2012/051139
Filing Date :12/03/2012
(87) International Publication No :WO 2012/123878
(61) Patent of Addition to Application Number :NA
Filing Date :NA
(62) Divisional to Application Number :NA
Filing Date :NA

(71)**Name of Applicant :**
1)KONINKLIJKE PHILIPS N.V.
Address of Applicant :High Tech Campus 5 NL 5656 AE Eindhoven Netherlands
(72)**Name of Inventor :**
1)LAURA LAPOINT Manuel
2)SIBENALLER Sara Marie
3)HUESER Lauren Elizabeth

(57) Abstract :
Methods and system to diagnose central sleep apnea of a patient employ a relatively short test combining few breathing parameters. The test is short in comparison to commonly used time consuming and complex multi parameter sleep studies. The patient uses a positive airway pressure device and follows breathing cues. The occurrence of a central apnea during the delivery of breathing cues may support a diagnosis of central sleep apnea.

No. of Pages : 22 No. of Claims : 15

(12) PATENT APPLICATION PUBLICATION
(19) INDIA
(22) Date of filing of Application :24/10/2013
(21) Application No.8570/CHENP/2013 A
(43) Publication Date : 07/11/2014

(54) Title of the invention : NOVEL POLYVINYL SULFONIC ACID METHOD FOR PRODUCING SAME AND USE OF SAME

(51) International classification :C08F8/00,C08F28/02,C08L41/00
(31) Priority Document No :2011101850
(32) Priority Date :28/04/2011
(33) Name of priority country :Japan
(86) International Application No :PCT/JP2012/061264
Filing Date :26/04/2012
(87) International Publication No :WO 2012/147872
(61) Patent of Addition to Application Number :NA
Filing Date :NA
(62) Divisional to Application Number :NA
Filing Date :NA

(71)**Name of Applicant :**
1)Asahi Kasei Finechem Co. Ltd.
Address of Applicant :3 23 Nakanoshima 3 chome Kita ku Osaka shi Osaka 5308205 Japan
2)University of Yamanashi
(72)**Name of Inventor :**
1)AKIKAZE Hiroshi
2)HIGASHI Hidenobu
3)OKUZAKI Hidenori

(57) Abstract :
The present invention addresses the problem of providing: a dispersion liquid of a composite of a conductive polymer and a dopant said dispersion liquid having high dispersion stability and being capable of forming a film having high conductivity without adding a high boiling point organic solvent into the dispersion; a polymer dopant which forms the dispersion liquid; and a conductive film which is produced from the dispersion liquid and has excellent conduction performance and excellent film properties. [Solution] The present invention is a polyvinyl sulfonic acid which contains a specific vinyl sulfonic acid unit represented by general formula (1) and wherein the molar quantity of sulfonic acid groups derived from vinyl sulfonic acid monomers is 50.0 98.0 mol% relative to the molar quantity of all monomer units. The polyvinyl sulfonic acid has an absorbance of 0.1 or more (0.2% by mass aqueous solution cell length is 10 mm) within the wavelength range of 255 800 nm.

No. of Pages : 125 No. of Claims : 24

(12) PATENT APPLICATION PUBLICATION
(19) INDIA
(22) Date of filing of Application :13/11/2013
(21) Application No.9126/CHENP/2013 A
(43) Publication Date : 07/11/2014

(54) Title of the invention : APPARATUS AND METHOD FOR CONVERTING 2D CONTENT INTO 3D CONTENT AND COMPUTER READABLE STORAGE MEDIUM THEREOF

(51) International classification :H04N13/00
(31) Priority Document No :1020110046349
(32) Priority Date :17/05/2011
(33) Name of priority country :Republic of Korea
(86) International Application No :PCT/KR2012/003643
Filing Date :09/05/2012
(87) International Publication No :WO 2012/157886
(61) Patent of Addition to Application Number :NA
Filing Date :NA
(62) Divisional to Application Number :NA
Filing Date :NA

(71)**Name of Applicant :**
1)SAMSUNG ELECTRONICS CO. LTD.
Address of Applicant :129 Samsung ro Yeongtong gu Suwon si Gyeonggi do 443 742 Republic of Korea
(72)**Name of Inventor :**
1)KWON Oh yun

(57) Abstract :
The method of converting 2D contents into 3D contents through a content converting apparatus includes: determining a quality of 3D contents to be converted from 2D contents that are video contents and include a plurality of frames; extracting an object from a frame among the plurality of frames; assigning depth to the extracted object; and performing rendering for conversion into 3D contents on the frame having the object assigned with the depth wherein at least one of the extracting the object the assigning the depth and the performing the rendering is performed in accordance with the determined quality of 3D contents.

No. of Pages : 29 No. of Claims : 18

(12) PATENT APPLICATION PUBLICATION
(19) INDIA
(22) Date of filing of Application :13/11/2013
(21) Application No.9127/CHENP/2013 A
(43) Publication Date : 07/11/2014

(54) Title of the invention : COMMUNICATION SYSTEM AND CORRESPONDING METHOD COMPUTER PROGRAM AND STORAGE MEANS

(51) International classification :H04W4/06
(31) Priority Document No :11/54262
(32) Priority Date :17/05/2011
(33) Name of priority country :France
(86) International Application No :PCT/EP2012/058020
Filing Date :02/05/2012
(87) International Publication No :WO 2012/156202
(61) Patent of Addition to Application Number :NA
Filing Date :NA
(62) Divisional to Application Number :NA
Filing Date :NA

(71)**Name of Applicant :**
1)SAGEM DEFENSE SECURITE
Address of Applicant :27 rue Leblanc F 75015 Paris France
(72)**Name of Inventor :**
1)BARD Yves
2)ALLARD Graud
3)RAYMOND Gilles
4)COURTET Patrice

(57) Abstract :
The invention relates to a communication system comprising communication nodes communicating via multi frequency time division multiple access frames. The nodes form a hierarchical cellular radio network that defines hierarchical levels which each include a base and at least one handset. The communication nodes are enabled to communicate via the base of the hierarchical level thereof. A master node comprises: a means (4.2) for selecting in each of the frames a transmission resource that is common to said communication nodes; a means (4.3) for broadcasting to the communication nodes through the hierarchical levels via the respective bases thereof information representative of the selected common transmission resource. The system is suitable for enabling said communication nodes to broadcast messages via the selected common transmission resource.

No. of Pages : 26 No. of Claims : 12

(12) PATENT APPLICATION PUBLICATION
(19) INDIA
(22) Date of filing of Application :22/10/2013
(21) Application No.8491/CHENP/2013 A
(43) Publication Date : 07/11/2014

(54) Title of the invention : NEW AGRICULTURAL AND DETERGENT COMPOSITIONS CONTAINING A TERTIARY AMIDE AS ADJUVANT OR AS SURFACTANT

(51) International classification :A01N25/30,C07C233/35,C11D1/52
(31) Priority Document No :11164846.5
(32) Priority Date :04/05/2011
(33) Name of priority country :EPO
(86) International Application No :PCT/EP2012/058270
Filing Date :04/05/2012
(87) International Publication No :WO 2012/150343
(61) Patent of Addition to Application Number :NA
Filing Date :NA
(62) Divisional to Application Number :NA
Filing Date :NA

(71)**Name of Applicant :**
1)TAMINCO
Address of Applicant :Pantserschipstraat 207 B 9000 Gent Belgium
(72)**Name of Inventor :**
1)BUYSE Kurt
2)MOONEN Kristof

(57) Abstract :
The invention relates to agrochemical compositions comprising new biodegradable bisaminopropylamides of formula (I) or of formula (II) and to their uses in detergent compositions. In the agrochemical compositions the bisaminopropylamides act as adjuvant for the agrochemically active compounds such as pesticides growth regulators or fertilizers.

No. of Pages : 38 No. of Claims : 19

(12) PATENT APPLICATION PUBLICATION
(19) INDIA
(22) Date of filing of Application :29/10/2013
(21) Application No.8685/CHENP/2013 A
(43) Publication Date : 07/11/2014

(54) Title of the invention : POSITION INDICATOR FOR 3D DISPLAY

(51) International classification :H04N13/02,H04N13/04
(31) Priority Document No :11163133.9
(32) Priority Date :20/04/2011
(33) Name of priority country :EPO
(86) International Application No :PCT/IB2012/051832
Filing Date :13/04/2012
(87) International Publication No :WO 2012/143836
(61) Patent of Addition to Application Number :NA
Filing Date :NA
(62) Divisional to Application Number :NA
Filing Date :NA

(71)**Name of Applicant :**
1)KONINKLIJKE PHILIPS N.V.
Address of Applicant :High Tech Campus 5 NL 5656 AE Eindhoven Netherlands
(72)**Name of Inventor :**
1)BRULS Wilhelmus Hendrikus Alfonsus

(57) Abstract :
A device 120 for processing three dimensional [3D] image data 122 for display on a 3D display 160 the 3D display being arranged for adjacently emitting in a viewing cone 180 a series of views 100 of the 3D image data the series of views enabling autostereoscopic viewing of the 3D image data at multiple viewing positions 182 184 in the viewing cone by a viewer perceiving two different ones of the series of views and the device comprising an indicator generator 140 arranged for establishing a graphical shape in the 3D image data for when being displayed on the 3D display providing to the viewer a position indicator graphically representing a relative position of the two different ones of the series of views within the series of views.

No. of Pages : 35 No. of Claims : 15

(12) PATENT APPLICATION PUBLICATION
(19) INDIA
(22) Date of filing of Application :18/11/2013
(21) Application No.9233/CHENP/2013 A
(43) Publication Date : 07/11/2014

(54) Title of the invention : SOYMILK MAKER

(51) International classification :A47J43/044,A47J43/07
(31) Priority Document No :PCT/CN2011/073893
(32) Priority Date :10/05/2011
(33) Name of priority country :China
(86) International Application No :PCT/IB2012/052210
Filing Date :03/05/2012
(87) International Publication No :WO 2012/153238
(61) Patent of Addition to Application Number :NA
Filing Date :NA
(62) Divisional to Application Number :NA
Filing Date :NA

(71)**Name of Applicant :**
1)KONINKLIJKE PHILIPS N.V.
Address of Applicant :High Tech Campus 5 NL 5656 AE Eindhoven Netherlands
(72)**Name of Inventor :**
1)FLEUREN Marcel Johan Dalitso
2)XUE Fei
3)YU Donghai
4)KUI Xiaoyun
5)WANG Changjie
6)ZHOU Qi

(57) Abstract :
The invention proposes a soymilk maker and a method of making soymilk using the soymilk maker. The soymilk maker comprises a container for receiving the bean or soymilk; a machine head arranged on the upper portion of the container the machine head having a motor accommodated therein; a rotary cutter driven by the motor; a collection unit arranged within the container for collecting the testa and residue; an adjusting mechanism arranged on the machine head and being adjustable to enable the collection unit to move within the container between a first position where the beans are processed and a second position where the testa or residue is collected in the collection unit. Such a configuration enables testa and residue to be collected in the collection unit without said unit being equipped with a separate filter and a separate cup.

No. of Pages : 28 No. of Claims : 15

(12) PATENT APPLICATION PUBLICATION
(19) INDIA
(22) Date of filing of Application :18/11/2013
(21) Application No.9234/CHENP/2013 A
(43) Publication Date : 07/11/2014

(54) Title of the invention : HIGH DYNAMIC RANGE IMAGE SIGNAL GENERATION AND PROCESSING

(51) International classification :G09G5/00,G09G5/02
(31) Priority Document No :11165491.9
(32) Priority Date :10/05/2011
(33) Name of priority country :EPO
(86) International Application No :PCT/IB2012/052102
Filing Date :27/04/2012
(87) International Publication No :WO 2012/153224
(61) Patent of Addition to Application Number :NA
Filing Date :NA
(62) Divisional to Application Number :NA
Filing Date :NA

(71)**Name of Applicant :**
1)KONINKLIJKE PHILIPS N.V.
Address of Applicant :High Tech Campus 5 NL 5656 AE Eindhoven Netherlands
(72)**Name of Inventor :**
1)NEWTON Philip Steven
2)DE HAAN Wiebe

(57) Abstract :
An apparatus generates an image signal in which pixels are encoded in N bit words which encode at least a luma per pixel. A receiver (201) obtains high dynamic range pixel values in accordance with a first color representation in M bitwords. A first generator (203) includes the high dynamic range pixel values in the image signal in the N bit words according to a second color representation. A second generator (205) includes in the image signal an indicator that high dynamic range pixel values are encoded. In some examples the high dynamic range pixel values may be provided in a segment that can alternatively contain high or low dynamic range pixel values and the indicator may indicate which type of data is included. The approach may e.g. facilitate introduction of high dynamic range capability into e.g. HDMI systems.

No. of Pages : 44 No. of Claims : 23

(12) PATENT APPLICATION PUBLICATION
(19) INDIA
(22) Date of filing of Application :19/11/2013
(21) Application No.9235/CHENP/2013 A
(43) Publication Date : 07/11/2014

(54) Title of the invention : VENTILATION SYSTEM REPAIR BANDAGE

(51) International classification :E21F1/04,F16L55/168
(31) Priority Document No :2011901582
(32) Priority Date :29/04/2011
(33) Name of priority country :Australia
(86) International Application No :PCT/AU2012/000437
Filing Date :27/04/2012
(87) International Publication No :WO 2012/145791
(61) Patent of Addition to Application Number :NA
Filing Date :NA
(62) Divisional to Application Number :NA
Filing Date :NA

(71)**Name of Applicant :**
1)BAHRI Siddharth
Address of Applicant :41 Gossamer Avenue Mirrabooka Western Australia 6061 Australia
(72)**Name of Inventor :**
1)BAHRI Siddharth

(57) Abstract :
A ventilation system repair bandage for application to damaged ventilation tubing portions. The ventilation system repair bandage comprising a first and a second side surfaces wherein a first side surface is afforded an adhesive material arranged to engage a damaged ventilation tubing portion whilst the ventilation tubing is pressurised to substantially prohibit leakage from the ventilation tubing portion through holes and tears therein.

No. of Pages : 10 No. of Claims : 8

(12) PATENT APPLICATION PUBLICATION
(19) INDIA
(22) Date of filing of Application :21/10/2013
(21) Application No.8441/CHENP/2013 A
(43) Publication Date : 07/11/2014

(54) Title of the invention : METHOD FOR PRODUCING ELASTIC SHEETS

(51) International classification :D06C3/06,D04H1/559
(31) Priority Document No :2011073697
(32) Priority Date :29/03/2011
(33) Name of priority country :Japan
(86) International Application No :PCT/JP2012/051434
Filing Date :24/01/2012
(87) International Publication No :WO 2012/132519
(61) Patent of Addition to Application Number :NA
Filing Date :NA
(62) Divisional to Application Number :NA
Filing Date :NA

(71)**Name of Applicant :**
1)UNICHARM CORPORATION
Address of Applicant :182 Shimobun Kinsei cho Shikokuchuo shi Ehime 7990111 Japan
(72)**Name of Inventor :**
1)OKUDA Jun
2)ISHIKAWA Shinichi
3)NAKAMURA Taishi
4)HASHIMOTO Tatsuya

(57) Abstract :
This method for producing elastic sheets involves passing a non woven fabric (3) which is transferred in a continuous state through gaps in a pair of rotating rolls (51 52) while teeth (51t 52t) formed on an outer circumferential surface engage with each other thereby stretching the non woven fabric (3) in the transfer direction by way of the teeth. The method for producing elastic sheets includes a seam forming step in which a first end in the transfer direction of the non woven fabric and a second end in the transfer direction of another non woven fabric are joined via joining parts. The joining parts are intermittently positioned in a cross direction that is orthogonal to the transfer direction.

No. of Pages : 19 No. of Claims : 9

(12) PATENT APPLICATION PUBLICATION
(19) INDIA
(22) Date of filing of Application :14/11/2013
(21) Application No.9142/CHENP/2013 A
(43) Publication Date : 07/11/2014

(54) Title of the invention : SYSTEM METHOD AND RAILWAY CARRIAGE FOR THE RAIL BOUND TRANSPORTATION OF OBJECTS

(51) International classification :B61D15/00
(31) Priority Document No :10 2011 101 636.1
(32) Priority Date :16/05/2011
(33) Name of priority country :Germany
(86) International Application No :PCT/EP2012/059032
Filing Date :15/05/2012
(87) International Publication No :WO 2012/156408
(61) Patent of Addition to Application Number :NA
Filing Date :NA
(62) Divisional to Application Number :NA
Filing Date :NA

(71)**Name of Applicant :**
1)K & K MASCHINENENTWICKLUNGS GMBH & CO. KG
Address of Applicant :Von Gravenreuth Strae 1 81827 M¼nchen Germany
(72)**Name of Inventor :**
1)DEHMEL Wolfram Peter

(57) Abstract :
The invention relates to a system and method for the rail bound transportation of objects e.g. for delivering or collecting material to and/or from railway working vehicles comprising several interconnected railway carriages (1) which respectively comprise at least one conveyor track (6 7) on which the objects can be driven in a longitudinal manner in relation to the railway carriages (1) and which are designed such that the conveyor tracks (6 7) join together the interconnected railway carriages (1). According to the invention said system comprises conveyor bodies (8) for the objects said bodies being designed to move from one railway carriage (1) to another railway carriage (1) along the conveyor tracks (6 7) which are connected one to the other. The invention also relates to suitable railway carriages therefor.

No. of Pages : 28 No. of Claims : 36

(12) PATENT APPLICATION PUBLICATION
(19) INDIA
(22) Date of filing of Application :19/11/2013
(21) Application No.9282/CHENP/2013 A
(43) Publication Date : 07/11/2014

(54) Title of the invention : LEAD ACID STORAGE BATTERY FOR ENERGY STORAGE

(51) International classification :H01M10/12
(31) Priority Document No :201110300585.5
(32) Priority Date :30/09/2011
(33) Name of priority country :China
(86) International Application No :PCT/JP2012/003697
Filing Date :06/06/2012
(87) International Publication No :WO 2013/046499
(61) Patent of Addition to Application Number :NA
Filing Date :NA
(62) Divisional to Application Number :NA
Filing Date :NA

(71)**Name of Applicant :**
1)PANASONIC CORPORATION
Address of Applicant :1006 Oaza Kadoma Kadoma shi Osaka 5718501 Japan
(72)**Name of Inventor :**
1)ZHANG Jing
2)ANDO Kazunari
3)SASAKI Takehiro

(57) Abstract :
This lead acid storage battery for energy storage is provided with a group of electrode plates and an electrolyte solution that is impregnated into the group of electrode plates. The group of electrode plates comprises a plurality of negative electrodes a plurality of positive electrodes and a plurality of separators. Each negative electrode comprises a negative electrode grid and a negative electrode active material that is held by the negative electrode grid. Each positive electrode comprises a positive electrode grid and a positive electrode active material that is held by the positive electrode grid. The separators respectively separate the positive electrodes from the negative electrodes. The total pore volume of the positive electrode active material is 0.087 0.120 cm/g and the negative electrode active material contains 3.2 4.8% by mass of barium sulfate.

No. of Pages : 46 No. of Claims : 12

(12) PATENT APPLICATION PUBLICATION
(19) INDIA
(22) Date of filing of Application :19/11/2013
(21) Application No.9283/CHENP/2013 A
(43) Publication Date : 07/11/2014

(54) Title of the invention : SOCIAL INFORMATION MANAGEMENT METHOD AND SYSTEM ADAPTED THERETO

(51) International classification :G06Q50/30
(31) Priority Document No :1020110048359
(32) Priority Date :23/05/2011
(33) Name of priority country :Republic of Korea
(86) International Application No :PCT/KR2012/003614
Filing Date :09/05/2012
(87) International Publication No :WO 2012/161435
(61) Patent of Addition to Application Number :NA
Filing Date :NA
(62) Divisional to Application Number :NA
Filing Date :NA

(71)**Name of Applicant :**
1)SAMSUNG ELECTRONICS CO. LTD.
Address of Applicant :129 Samsung ro Yeongtong gu Suwon si Gyeonggi do 443 742 Republic of Korea
(72)**Name of Inventor :**
1)KIM Jin Yong
2)UEYAMA Nobuyoshi
3)WATANABE Masato
4)KIM Yu Ran

(57) Abstract :
A social information management method and system designate a plurality of mobile devices as a group list of mobile devices that share the information based on a social network; create social information in a mobile device by registering an item selected or input to the mobile device while the mobile device operates a user function; and shares the social information with the mobile devices in the information sharing group list.

No. of Pages : 46 No. of Claims : 15

(12) PATENT APPLICATION PUBLICATION
(19) INDIA
(22) Date of filing of Application :19/11/2013
(21) Application No.9284/CHENP/2013 A
(43) Publication Date : 07/11/2014

(54) Title of the invention : POSITION HOLDING DEVICE FOR ROTATING LEVER AND VEHICLE DOOR LOCK DEVICE PROVIDED WITH SAID POSITION HOLDING DEVICE FOR ROTATING LEVER

(51) International classification :E05B65/20,B60J5/00
(31) Priority Document No :2011095737
(32) Priority Date :22/04/2011
(33) Name of priority country :Japan
(86) International Application No :PCT/JP2012/060022
Filing Date :12/04/2012
(87) International Publication No :WO 2012/144413
(61) Patent of Addition to Application Number :NA
Filing Date :NA
(62) Divisional to Application Number :NA
Filing Date :NA

(71)**Name of Applicant :**
1)AISIN SEIKI KABUSHIKI KAISHA
Address of Applicant :1 Asahi machi 2 chome Kariya shi Aichi 4488650 Japan
(72)**Name of Inventor :**
1)AKIZUKI Ryujiro
2)NISHIO Takashi
3)WATANABE Nobuko
4)TOMOCHIKA Masayuki
5)IWATA Masanari
6)SONO Yasuhiko

(57) Abstract :
This position holding device that is for a rotating lever is provided with a rotating lever and a torsion spring and can elastically hold the rotating lever at the two positions of a first position and a second position. The torsion spring has: a wound section; and a first arm section and second arm section that extend from the wound section and face each other sandwiching the engagement section of the rotation lever. In the first arm section a thread is formed at the intermediate portion thereof. An energizing section is formed in the second arm section. As a result the energizing force of the energizing section can be caused to act on the rotating lever as a braking force resisting the energizing force by the thread. Consequently it is possible to reduce the sound of contact when the rotating lever contacts a stopper member.

No. of Pages : 39 No. of Claims : 6

(12) PATENT APPLICATION PUBLICATION
(19) INDIA
(22) Date of filing of Application :10/10/2013

(21) Application No.8245/CHENP/2013 A
(43) Publication Date : 07/11/2014

(54) Title of the invention : SUBSTRATE FOR MOUNTING A PLURALITY OF LIGHT EMITTING ELEMENTS

(51) International classification :H05K1/02,H01L33/58,F21V5/00
(31) Priority Document No :11159132.7
(32) Priority Date :22/03/2011
(33) Name of priority country :EPO
(86) International Application No :PCT/IB2012/051148
Filing Date :12/03/2012
(87) International Publication No :WO 2012/127355
(61) Patent of Addition to Application Number :NA
Filing Date :NA
(62) Divisional to Application Number :NA
Filing Date :NA

(71)**Name of Applicant :**
1)KONINKLIJKE PHILIPS N.V.
Address of Applicant :High Tech Campus 5 NL 5656 AE Eindhoven Netherlands
(72)**Name of Inventor :**
1)COOIJMANS Huib

(57) Abstract :
The present invention relates to a substrate (1) comprising: a first segment (5a) provided with a first contact pad (22a) for connection of a first light emitting element (2a); and a second segment (5b) provided with a second contact pad (22b) for connection of a second light emitting element (2b) wherein the substrate is provided with at least one through hole (6a c) that extends from an edge (8 9) of the substrate to a point within the substrate such that a relative movement in a plane of the substrate can be achieved between the first segment (5a) of the substrate and the second segment (5b) of the substrate by applying a mechanical force to the substrate. This makes very accurate alignment to a multiple cavity optical system possible without adjusting the optics thereby enabling a more convenient and time efficient process in production.

No. of Pages : 22 No. of Claims : 15

(12) PATENT APPLICATION PUBLICATION
(19) INDIA
(22) Date of filing of Application :10/10/2013
(21) Application No.8246/CHENP/2013 A
(43) Publication Date : 07/11/2014

(54) Title of the invention : ULTRASONIC CMUT WITH SUPPRESSED ACOUSTIC COUPLING TO THE SUBSTRATE

(51) International classification :B06B1/02,G10K11/00
(31) Priority Document No :61/466172
(32) Priority Date :22/03/2011
(33) Name of priority country :U.S.A.
(86) International Application No :PCT/IB2012/051173
Filing Date :13/03/2012
(87) International Publication No :WO 2012/127360
(61) Patent of Addition to Application Number :NA
Filing Date :NA
(62) Divisional to Application Number :NA
Filing Date :NA

(71)**Name of Applicant :**
1)KONINKLIJKE PHILIPS N.V.
Address of Applicant :High Tech Campus 5 NL 5656 AE Eindhoven Netherlands
(72)**Name of Inventor :**
1)FRASER John Douglas

(57) Abstract :
An array of cMUT cells are formed on individually isolated massive plates on a substrate. The mass of each plate provides an inertial force in opposition to the force and motion of transmission by the cell which reduces the resultant translation of motion in the plate. The reduction in motion results in less coupling of acoustic energy into the substrate and contamination of the signals of adjacent cMUT cells by lateral waves. The unwanted wave coupling into the substrate can be further damped by compliant or sparse periodic mounting of the massive plates on the substrate.

No. of Pages : 25 No. of Claims : 21

(12) PATENT APPLICATION PUBLICATION
(19) INDIA
(22) Date of filing of Application :22/10/2013
(21) Application No.8472/CHENP/2013 A
(43) Publication Date : 07/11/2014

(54) Title of the invention : FIBRE CHANNEL FORWARDER FABRIC LOGIN SEQUENCE

(51) International classification :H04L12/56,H04L29/08
(31) Priority Document No :13/152102
(32) Priority Date :02/06/2011
(33) Name of priority country :U.S.A.
(86) International Application No :PCT/CA2012/050357
Filing Date :30/05/2012
(87) International Publication No :WO 2012/162832
(61) Patent of Addition to Application Number :NA
Filing Date :NA
(62) Divisional to Application Number :NA
Filing Date :NA

(71)**Name of Applicant :**
1)INTERNATIONAL BUSINESS MACHINES CORPORATION
Address of Applicant :New Orchard Road Armonk New York 10504 U.S.A.
(72)**Name of Inventor :**
1)EISENHAUER Daniel G.
2)HATHORN Roger G.
3)MAY Henry J.
4)RICCI Louis W.

(57) Abstract :
Exemplary method system and computer program product embodiments for fibre channel forwarder fabric login sequence in a fibre channel switch environment where a Fibre Channel Forwarder (cFCF) is separated from a Fibre Channel over Ethernet (FCoE) data forwarder (FDF) are provided. In one embodiment by way of example only at a Fibre Channel Login (FLOGI) to a target device from an initiator device a node address acceptance notification is held from reaching the initiator device until each of the zoning distributions have been considered to have been completed.

No. of Pages : 30 No. of Claims : 20

(12) PATENT APPLICATION PUBLICATION
(19) INDIA
(22) Date of filing of Application :20/11/2013
(21) Application No.9300/CHENP/2013 A
(43) Publication Date : 07/11/2014

(54) Title of the invention : OPTICAL SCANNING APPARATUS SYSTEM AND METHOD

(51) International classification :G03G15/04,G02B26/10
(31) Priority Document No :NA
(32) Priority Date :NA
(33) Name of priority country :NA
(86) International Application No :PCT/US2011/040094
Filing Date :10/06/2011
(87) International Publication No :WO 2012/170038
(61) Patent of Addition to Application Number :NA
Filing Date :NA
(62) Divisional to Application Number :NA
Filing Date :NA

(71)**Name of Applicant :**
1)HEWLETT PACKARD DEVELOPMENT COMPANY L.P.
Address of Applicant :11445 Compaq Center Drive West Houston TX 77070 U.S.A.
(72)**Name of Inventor :**
1)PLOTKIN Michael
2)TOWNER David K.
3)LIVNE Haim
4)SHECHTERMAN Mark

(57) Abstract :
An optical scanning apparatus a system and a method of optical scanning independently determine illumination spot size and spacing. The apparatus includes an array of optical emitters to provide a plurality of optical beams and a plurality of microlenses to receive the optical beams. The microlenses form an intermediate image of the array at substantially unity array magnification. The apparatus further includes an adjustable collimator to receive the plurality of optical beams from the intermediate image a beam scanner to scan the optical beams in an in scan direction and a scan lens to focus the scanned optical beams. An arrangement of illumination spots forms an image of the array.

No. of Pages : 43 No. of Claims : 15

(12) PATENT APPLICATION PUBLICATION
(19) INDIA
(22) Date of filing of Application :20/11/2013
(21) Application No.9305/CHENP/2013 A
(43) Publication Date : 07/11/2014

(54) Title of the invention : ELECTRICAL DEVICE

(51) International classification :G06F12/00
(31) Priority Document No :NA
(32) Priority Date :NA
(33) Name of priority country :NA
(86) International Application No :PCT/JP2011/067896
Filing Date :04/08/2011
(87) International Publication No :WO 2013/018227
(61) Patent of Addition to Application Number :NA
Filing Date :NA
(62) Divisional to Application Number :NA
Filing Date :NA

(71)**Name of Applicant :**
1)Mitsubishi Electric Corporation
Address of Applicant :7 3 Marunouchi 2 chome Chiyoda ku Tokyo 1008310 Japan
(72)**Name of Inventor :**
1)KOARA Kengo

(57) Abstract :
The present invention is provided with: a USB interface (102) to which a USB removable drive device (200) is connected; a non volatile memory (101) for storing USB removable drive device specific information (210b) that is specific to the USB removable drive device (200) and drive allocation/fixation setting information (160) indicative of an association between the USB removable drive device (200) and a drive number the non volatile memory being built into a programmable display device (100); and a control unit (105) for allocating to the USB removable drive device (200) connected to the USB interface (102) a drive number that has been associated by drive allocation information (150) when information that matches USB removable drive device specific information (210) acquired from the USB removable drive device (200) connected to the USB interface (102) is included in the drive allocation information (150) stored in the non volatile memory (101).

No. of Pages : 36 No. of Claims : 5

(12) PATENT APPLICATION PUBLICATION
(19) INDIA
(22) Date of filing of Application :31/10/2013
(21) Application No.8752/CHENP/2013 A
(43) Publication Date : 07/11/2014

(54) Title of the invention : METHODS AND SYSTEMS OF WIRELESS COMMUNICATION WITH REMOTE RADIO HEADS

(51) International classification :H04L27/26,H04B7/04
(31) Priority Document No :13/099104
(32) Priority Date :02/05/2011
(33) Name of priority country :U.S.A.
(86) International Application No :PCT/US2012/034514
Filing Date :20/04/2012
(87) International Publication No :WO 2012/151063
(61) Patent of Addition to Application Number :NA
Filing Date :NA
(62) Divisional to Application Number :NA
Filing Date :NA

(71)**Name of Applicant :**
1)BLACKBERRY LIMITED
Address of Applicant :2200 University Avenue East Waterloo Ontario N2K 0A7 Canada
(72)**Name of Inventor :**
1)GAO Shiwei
2)XU Hua
3)GUO Shiguang
4)SMITH Jack Anthony
5)JIA Yongkang
6)EBRAHIMI TAZEH MAHALLEH Masoud
7)YU Dongsheng
8)HARRISON Robert Mark

(57) Abstract :
A method for operating a transmission point in a telecommunications cell is provided. The method includes the transmission point in the cell transmitting a unicast PDCCH intended only for a specific UE in the cell. The unicast PDCCH contains at least one resource element in each resource element group. The at least one resource element contains a UE specific DMRS to be used for decoding the unicast PDCCH without the cell specific reference signal.

No. of Pages : 52 No. of Claims : 41

(12) PATENT APPLICATION PUBLICATION
(19) INDIA
(22) Date of filing of Application :14/11/2013
(21) Application No.9160/CHENP/2013 A
(43) Publication Date : 07/11/2014

(54) Title of the invention : SMART CURRENT TRANSFORMERS

(51) International classification :G01R15/18,G01R1/04
(31) Priority Document No :13/089787
(32) Priority Date :19/04/2011
(33) Name of priority country :U.S.A.
(86) International Application No :PCT/US2012/033908
Filing Date :17/04/2012
(87) International Publication No :WO 2012/145297
(61) Patent of Addition to Application Number :NA
Filing Date :NA
(62) Divisional to Application Number :NA
Filing Date :NA

(71)**Name of Applicant :**
1)SCHNEIDER ELECTRIC IT CORPORATION
Address of Applicant :132 Fairgrounds Road West Kingston RI 02892 U.S.A.
(72)**Name of Inventor :**
1)BLAKE Arthur Joseph Jr.
2)DEOKAR Vishwas Mohaniraj
3)PAIK Namwook
4)SPITAELS James S.

(57) Abstract :
According to one aspect embodiments of the invention provide a current monitoring device comprising a current transformer configured to be removeably coupled to a power line and to generate a reference signal having a level related to a current level of the power line a sensor circuit connected to the current transformer and configured to be removeably coupled to a communications bus and to convert the reference signal to a digital reference signal and provide a signal indicative of the current level to the communication bus and a housing containing the sensor circuit and the current transformer.

No. of Pages : 36 No. of Claims : 20

(12) PATENT APPLICATION PUBLICATION
(19) INDIA
(22) Date of filing of Application :14/11/2013

(21) Application No.9161/CHENP/2013 A
(43) Publication Date : 07/11/2014

(54) Title of the invention : SYSTEM OF INTELLIGENT SENSORS IN AN ELECTRICAL PANELBOARD

(51) International classification :G01R19/25,F24F11/00,G01D4/00
(31) Priority Document No :13/089798
(32) Priority Date :19/04/2011
(33) Name of priority country :U.S.A.
(86) International Application No :PCT/US2012/033905
Filing Date :17/04/2012
(87) International Publication No :WO 2012/145295
(61) Patent of Addition to Application Number :NA
Filing Date :NA
(62) Divisional to Application Number :NA
Filing Date :NA

(71)**Name of Applicant :**
1)SCHNEIDER ELECTRIC IT CORPORATION
Address of Applicant :132 Fairgrounds Road West Kingston RI 02892 U.S.A.
(72)**Name of Inventor :**
1)PAIK Namwook
2)SPITAELS James S.

(57) Abstract :
According to one aspect embodiments of the invention provide a system for monitoring a plurality of circuit branches the system comprising a plurality of current sensors each configured to be coupled to at least one of the plurality of circuit branches and to produce a signal having a level related to a current level of the one of the plurality of circuit branches a communications bus a plurality of sensor circuits wherein each one of the plurality of sensor circuits is configured to convert the signal from the associated one of the plurality of current sensors to a digital measurement signal and provide the digital measurement signal to the communication bus and a controller configured to receive the digital measurement signal from each sensor circuit over the communication bus and transmit data related to the digital measurement signal from each sensor circuit to an external client.

No. of Pages : 37 No. of Claims : 20

(12) PATENT APPLICATION PUBLICATION
(19) INDIA
(22) Date of filing of Application :14/11/2013
(21) Application No.9162/CHENP/2013 A
(43) Publication Date : 07/11/2014

(54) Title of the invention : SYSTEM AND METHOD FOR AUTOMATICALLY ADDRESSING DEVICES IN A MULTI DROP NETWORK

(51) International classification :H04L29/12,H04L12/40
(31) Priority Document No :13/089678
(32) Priority Date :19/04/2011
(33) Name of priority country :U.S.A.
(86) International Application No :PCT/US2012/034115
Filing Date :18/04/2012
(87) International Publication No :WO 2012/145423
(61) Patent of Addition to Application Number :NA
Filing Date :NA
(62) Divisional to Application Number :NA
Filing Date :NA

(71)**Name of Applicant :**
1)SCHNEIDER ELECTRIC IT CORPORATION
Address of Applicant :132 Fairgrounds Road West Kingston RI 02892 U.S.A.
(72)**Name of Inventor :**
1)SPITAELS James S.
2)DEOKAR Vishwas Mohaniraj
3)PAIK Namwook
4)MEARNS Brian Patrick

(57) Abstract :
Systems and methods that automatically assign addresses to devices coupled to a shared bus are provided. In one example a system for assigning addresses to a plurality of devices within a network includes a memory and at least one processor coupled to the memory. The system is configured to instruct all of the plurality of devices to respectively select a first dynamic address from a first set of dynamic addresses respectively assign a different static address to each device having a first dynamic address that uniquely identifies the device instruct all of the plurality of devices having a first dynamic address that identifies at least two devices to respectively select a second dynamic address from a second set of dynamic addresses and respectively assign another different static address to each device having a second dynamic address that uniquely identifies the device.

No. of Pages : 71 No. of Claims : 25

(12) PATENT APPLICATION PUBLICATION
(19) INDIA
(22) Date of filing of Application :20/11/2013
(21) Application No.9319/CHENP/2013 A
(43) Publication Date : 07/11/2014

(54) Title of the invention : SECURE INPUT VIA A TOUCHSCREEN

(51) International classification :G06F21/20
(31) Priority Document No :61/491086
(32) Priority Date :27/05/2011
(33) Name of priority country :U.S.A.
(86) International Application No :PCT/US2012/039619
Filing Date :25/05/2012
(87) International Publication No :WO 2012/166613
(61) Patent of Addition to Application Number :NA
Filing Date :NA
(62) Divisional to Application Number :NA
Filing Date :NA

(71)**Name of Applicant :**
1)QUALCOMM Incorporated
Address of Applicant :Attn: International Ip Administration 5775 Morehouse Drive San Diego California 92121 U.S.A.
(72)**Name of Inventor :**
1)LIOY Marcello V.

(57) Abstract :
A method and apparatus is provided for securely obtaining input from a touchscreen. A secure execution environment may be implemented (e.g. at a processor) where the secure execution environment may include a touchscreen driver. A keypad image may be sent from the secure execution environment to be displayed by a touchscreen. An input location may be received at the secure execution environment from the touchscreen driver. Such input location may be converted at the secure execution environment into a character symbol or a request to change the keypad image displayed at the touchscreen. In one implementation the secure execution environment may further implement a display driver which sends the keypad image to the touchscreen. The secure execution environment may implement driver keypad image mapping function that maps the keypad image to a character set.

No. of Pages : 72 No. of Claims : 49

(12) PATENT APPLICATION PUBLICATION
(19) INDIA
(22) Date of filing of Application :13/11/2013
(21) Application No.9093/CHENP/2013 A
(43) Publication Date : 07/11/2014

(54) Title of the invention : PLANAR MAPPING AND TRACKING FOR MOBILE DEVICES

(51) International classification :G06T7/20,G06T7/00
(31) Priority Document No :61/490764
(32) Priority Date :27/05/2011
(33) Name of priority country :U.S.A.
(86) International Application No :PCT/US2012/036624
Filing Date :04/05/2012
(87) International Publication No :WO 2012/166293
(61) Patent of Addition to Application Number :NA
Filing Date :NA
(62) Divisional to Application Number :NA
Filing Date :NA

(71)**Name of Applicant :**
1)QUALCOMM INCORPORATED
Address of Applicant :ATTN: International IP Administration 5775 Morehouse Drive San Diego California 92121 1714 U.S.A.
(72)**Name of Inventor :**
1)PIRCHHEIM Christian
2)REITMAYR Gerhard

(57) Abstract :
Real time tracking and mapping is performed using images of unknown planar object. Multiple images of the planar object are captured. A new image is selected as a new keyframe. Homographies are estimated for the new keyframe and each of a plurality of previous keyframes for the planar object that are spatially distributed. A graph structure is generated using the new keyframe and each of the plurality of previous keyframes and the homographies between the new keyframe and each of the plurality of previous keyframes. The graph structure is used to create a map of the planar object. The planar object is tracked based on the map and subsequently captured images.

No. of Pages : 39 No. of Claims : 26

(12) PATENT APPLICATION PUBLICATION
(19) INDIA
(22) Date of filing of Application :19/11/2013
(21) Application No.9266/CHENP/2013 A
(43) Publication Date : 07/11/2014

(54) Title of the invention : PRESS PLATEN OR ENDLESS BELT HAVING A SANDWICH TYPE STRUCTURE

(51) International classification :B30B15/06,B44B5/02
(31) Priority Document No :11005298.2
(32) Priority Date :29/06/2011
(33) Name of priority country :EPO
(86) International Application No :PCT/EP2012/002684
Filing Date :26/06/2012
(87) International Publication No :WO 2013/000563
(61) Patent of Addition to Application Number :NA
Filing Date :NA
(62) Divisional to Application Number :NA
Filing Date :NA

(71)**Name of Applicant :**
1)HUECK RHEINISCHE GMBH
Address of Applicant :Helmholtzstrasse 9 41747 Viersen Germany
(72)**Name of Inventor :**
1)ESPE Oliver
2)ESPE Rolf

(57) Abstract :
The present invention relates to a press platen (1) or endless belt for embossing materials in particular wooden materials or plastics materials. In order to considerably reduce the production costs and the use of material it is proposed according to the invention that use is made of a sandwich body which consists of a carrier body (10) and an embossing body (11) wherein said bodies are connected together in a firm and planar manner via a magnetically active and/or metallic adhesive agent (12). As a result of the selection of the adhesive agent for example in the form of a magnetic film or magnetic materials a hard or soft solder or a soldering paste it is thus possible to break the connection in a reversible manner at any time and thus to exchange the embossing body (11).

No. of Pages : 21 No. of Claims : 15

(12) PATENT APPLICATION PUBLICATION
(19) INDIA
(22) Date of filing of Application :19/11/2013
(21) Application No.9267/CHENP/2013 A
(43) Publication Date : 07/11/2014

(54) Title of the invention : COMPOSITIONS USES AND METHODS FOR TREATMENT OF METABOLIC DISORDERS AND DISEASES

(51) International classification	:C07K19/00,C12N15/62,A61K38/18
(31) Priority Document No	:61/504128
(32) Priority Date	:01/07/2011
(33) Name of priority country	:U.S.A.
(86) International Application No	:PCT/US2012/045087
Filing Date	:29/06/2012
(87) International Publication No	:WO 2013/006486
(61) Patent of Addition to Application Number	:NA
Filing Date	:NA
(62) Divisional to Application Number	:NA
Filing Date	:NA

(71)**Name of Applicant :**
1)NGM BIOPHARMACEUTICALS INC.
Address of Applicant :630 Gateway Boulevard South San Francisco CA 94080 U.S.A.
(72)**Name of Inventor :**
1)LING Lei
2)LINDHOUT Darrin A.

(57) Abstract :
The invention relates to variants and fusions of fibroblast growth factor 19 (FGF19) variants and fusions of fibroblast growth factor 21 (FGF21) fusions of fibroblast growth factor 19 (FGF19) and/or fibroblast growth factor 21 (FGF21) and variants or fusions of fibroblast growth factor 19 (FGF19) and/or fibroblast growth factor 21 (FGF21) proteins and peptide sequences (and peptidomimetics) having one or more activities such as glucose lowering activity and methods for and uses in treatment of hyperglycemia and other disorders.

No. of Pages : 118 No. of Claims : 74

(12) PATENT APPLICATION PUBLICATION
(19) INDIA
(22) Date of filing of Application :19/11/2013
(21) Application No.9268/CHENP/2013 A
(43) Publication Date : 07/11/2014

(54) Title of the invention : METHOD AND DEVICE FOR FEEDING A THREAD TO A TEXTILE MACHINE WITH CONSTANT TENSION AND CONSTANT VELOCITY OR QUANTITY

(51) International classification :B65H59/38
(31) Priority Document No :MI2011A001027
(32) Priority Date :08/06/2011
(33) Name of priority country :Italy
(86) International Application No :PCT/IB2012/001053
Filing Date :30/05/2012
(87) International Publication No :WO 2013/045982
(61) Patent of Addition to Application Number :NA
Filing Date :NA
(62) Divisional to Application Number :NA
Filing Date :NA

(71)**Name of Applicant :**
1)BTSR INTERNATIONAL S.P.A.
Address of Applicant :Via Santa Rita snc I 21057 Olgiate Olona (Varese) Italy
(72)**Name of Inventor :**
1)BAREA Tiziano

(57) Abstract :
A method for feeding a yarn with constant tension and constant velocity or quantity to a textile machine (T) the processing point of which is distant from a spool (2) from which the yarn (F) unwinds a first feed control and regulator loop being provided presenting first tension measurement means and regulator means for said yarn (F). Velocity measurement means forming part of a second control loop are provided in proximity to said point or zone to measure this velocity the yarn feed tension being regulated on the basis of the measured velocity datum such as to achieve a desired prefixed velocity value at said processing zone or point.

No. of Pages : 20 No. of Claims : 15

(12) PATENT APPLICATION PUBLICATION
(19) INDIA
(22) Date of filing of Application :22/11/2013
(21) Application No.9380/CHENP/2013 A
(43) Publication Date : 07/11/2014

(54) Title of the invention : BEVERAGE DISPENSING SYSTEM WITH SOCIAL MEDIA CAPABILITIES

(51) International classification :G06Q20/32,G06Q30/02
(31) Priority Document No :61/478425
(32) Priority Date :22/04/2011
(33) Name of priority country :U.S.A.
(86) International Application No :PCT/US2012/034486
Filing Date :20/04/2012
(87) International Publication No :WO 2012/145649
(61) Patent of Addition to Application Number :NA
Filing Date :NA
(62) Divisional to Application Number :NA
Filing Date :NA

(71)**Name of Applicant :**
1)PEPSICO INC.
Address of Applicant :700 Anderson Hill Road Purchase NY 10577 U.S.A.
(72)**Name of Inventor :**
1)CHUNG Terry Tae II
2)VELAZQUEZ Richard

(57) Abstract :
A method is provided comprising receiving instructions at a first device. The instructions may correspond to an item transaction. The item may be a food product. The item transaction may comprise an item gift. The method may comprise generating a code based on the instructions received at the first device for the item transaction. The method may comprise generating a message at the first device. The method may comprise transmitting the code and the message from the first device to a second device.

No. of Pages : 58 No. of Claims : 32

(12) PATENT APPLICATION PUBLICATION
(19) INDIA
(22) Date of filing of Application :24/10/2013
(21) Application No.8574/CHENP/2013 A
(43) Publication Date : 07/11/2014

(54) Title of the invention : ANTI CD40 ANTIBODIES AND METHODS OF USE

(51) International classification :C07K16/28,C12N15/13,A61K39/395
(31) Priority Document No :61/480863
(32) Priority Date :29/04/2011
(33) Name of priority country :U.S.A.
(86) International Application No :PCT/US2012/035502
Filing Date :27/04/2012
(87) International Publication No :WO 2012/149356
(61) Patent of Addition to Application Number :NA
Filing Date :NA
(62) Divisional to Application Number :NA
Filing Date :NA

(71)**Name of Applicant :**
1)APEXIGEN INC.
Address of Applicant :863 Mitten Road Suite 103 Burlingame California 94070 U.S.A.
(72)**Name of Inventor :**
1)ZHANG Yongke
2)YU Guo Liang
3)ZHU Weimin

(57) Abstract :
The present invention provides high affinity anti CD40 monoclonal antibodies and related compositions which may be used in any of a variety of therapeutic methods for the treatment of cancer and other diseases.

No. of Pages : 124 No. of Claims : 36

(12) PATENT APPLICATION PUBLICATION
(19) INDIA
(22) Date of filing of Application :31/10/2013
(21) Application No.8781/CHENP/2013 A
(43) Publication Date : 07/11/2014

(54) Title of the invention : MAGNETIC RESONANCE IMAGING OF OBJECT IN MOTION

(51) International classification :G01R33/561,G01R33/567,G01R33/565
(31) Priority Document No :11163360.8
(32) Priority Date :21/04/2011
(33) Name of priority country :EPO
(86) International Application No :PCT/IB2012/051760
Filing Date :11/04/2012
(87) International Publication No :WO 2012/143821
(61) Patent of Addition to Application Number :NA
Filing Date :NA
(62) Divisional to Application Number :NA
Filing Date :NA

(71)**Name of Applicant :**
1)KONINKLIJKE PHILIPS N.V.
Address of Applicant :High Tech Campus 5 NL 5656 AE Eindhoven Netherlands
(72)**Name of Inventor :**
1)BOERNERT Peter
2)DONEVA Mariya Ivanova
3)STEHNING Christian

(57) Abstract :
A magnetic resonance imaging method includes acquisition of datasets of magnetic resonance data from an object. At least some of the datasets are undersampled in k space. Each dataset relating to a motion state of the object. Images are reconstructed from each of the datasets by way of a compressed sensing reconstruction. Motion correction is applied to the reconstructed images relative to a selected motion state so as to generate motion corrected images. A diagnostic image for the selected motion state is derived e.g. by averaging from the motion corrected images.

No. of Pages : 13 No. of Claims : 8

(12) PATENT APPLICATION PUBLICATION
(19) INDIA
(22) Date of filing of Application :08/11/2013
(21) Application No.8985/CHENP/2013 A
(43) Publication Date : 07/11/2014

(54) Title of the invention : FIELD SEQUENTIAL COLOR DISPLAY WITH A COMPOSITE COLOR

(51) International classification :G09G3/20,G09G3/34
(31) Priority Document No :61/485990
(32) Priority Date :13/05/2011
(33) Name of priority country :U.S.A.
(86) International Application No :PCT/US2012/037606
Filing Date :11/05/2012
(87) International Publication No :WO 2012/158549
(61) Patent of Addition to Application Number :NA
Filing Date :NA
(62) Divisional to Application Number :NA
Filing Date :NA

(71)**Name of Applicant :**
1)PIXTRONIX INC.
Address of Applicant :c/o Qualcomm Incorporated ATTN: International IP Administration 5775 Morehouse Drive San Diego California 92121 1714 U.S.A.
(72)**Name of Inventor :**
1)GANDHI Jignesh
2)BUCKLEY Edward

(57) Abstract :
A display includes pixels and a controller. The controller can cause the pixels to generate colors corresponding to an image frame. The controller can cause the display to display the image frame using sets of subframe images corresponding to contributing colors according to a field sequential color (FSC) image formation process. The contributing colors include component colors and at least one composite color which is substantially a combination of at least two component colors. A greater number of subframe images corresponding to a first component color can be displayed relative to a number of subframe images corresponding to another component color. The display can be configured to output a given luminance of a contributing color for a first pixel by generating a first set of pixel states and output the same luminance of the contributing color for a second pixel by generating a second different set of pixel states.

No. of Pages : 108 No. of Claims : 28

(12) PATENT APPLICATION PUBLICATION
(19) INDIA
(22) Date of filing of Application :20/11/2013
(21) Application No.9290/CHENP/2013 A
(43) Publication Date : 07/11/2014

(54) Title of the invention : METHOD AND APPARATUS FOR VIRTUAL PAIRING WITH A GROUP OF SEMI CONNECTED DEVICES

(51) International classification :H04L9/08
(31) Priority Document No :13/157048
(32) Priority Date :09/06/2011
(33) Name of priority country :U.S.A.
(86) International Application No :PCT/US2011/040099
Filing Date :10/06/2011
(87) International Publication No :WO 2012/170039
(61) Patent of Addition to Application Number :NA
Filing Date :NA
(62) Divisional to Application Number :NA
Filing Date :NA

(71)**Name of Applicant :**
1)QUALCOMM Incorporated
Address of Applicant :Attn: International Ip Administration 5775 Morehouse Drive San Diego California 92121 1714 U.S.A.
(72)**Name of Inventor :**
1)JACOBSON David M.
2)XIAO Lu
3)JULIAN David J.
4)JIA Zhanfeng
5)BUESKER Brian M.
6)BICA Vito R.
7)TEAGUE Edward H.

(57) Abstract :
One feature provides a method for a client node to establish a session key with a group node by obtaining an epoch identity value associated with a current epoch wherein obtaining the epoch identity value includes one of computing the epoch identity value based on a node real time or negotiating the epoch identity value with the group node computing a restricted key using a shared secret key the epoch identity value and a group node identity associated with the group node and executing a session key establishment protocol with the group node to derive the session key using the restricted key as a master key in the session key establishment protocol. The session key may be established between the group node and the client node even though communications between the group node and the central node is only intermittently available during the current epoch.

No. of Pages : 85 No. of Claims : 47

(12) PATENT APPLICATION PUBLICATION
(19) INDIA
(22) Date of filing of Application :22/11/2013
(21) Application No.9390/CHENP/2013 A
(43) Publication Date : 07/11/2014

(54) Title of the invention : HEATING ELEMENT HAVING FILMS

(51) International classification :H05B3/12,H05B3/86
(31) Priority Document No :1154954
(32) Priority Date :07/06/2011
(33) Name of priority country :France
(86) International Application No :PCT/FR2012/051221
Filing Date :31/05/2012
(87) International Publication No :WO 2012/168628
(61) Patent of Addition to Application Number :NA
Filing Date :NA
(62) Divisional to Application Number :NA
Filing Date :NA

(71)**Name of Applicant :**
1)SAINT GOBAIN GLASS FRANCE
Address of Applicant :18 Avenue dAlsace F 92400 Courbevoie France
(72)**Name of Inventor :**
1)LAURENT Stephane
2)CHARLET Emilie
3)NGHIEM Bernard
4)PETER Emmanuelle

(57) Abstract :
The invention relates to a heating element including a substrate (1) having a stack of thin films. The stack of thin films includes a film (3) which is suitable for heating and which has a surface electrical resistance of 20 to 200 O/sq wherein the heating element also includes two collecting conductors suitable for being supplied with electrical voltage the film suitable for heating being an electrically conductive transparent oxide film and the film (3) suitable for heating not being machined and being electrically connected to both collecting conductors. The film (3) that is suitable for heating has a thickness of between 50 nm and 300 nm. The invention makes it possible to easily install a heating element having a film which is suitable for heating and simply manufactured in an electric vehicle or to easily connect said element to the public power grid.

No. of Pages : 16 No. of Claims : 17

(12) PATENT APPLICATION PUBLICATION
(19) INDIA
(22) Date of filing of Application :27/03/2013
(21) Application No.2418/CHENP/2013 A
(43) Publication Date : 07/11/2014

(54) Title of the invention : PROCESS FOR WORKING UP AN EXHAUST GAS FROM A SYSTEM FOR PRODUCING HYDROXYLAMINE OR HYDROXYLAMMONIUM SALTS

(51) International classification :C01B21/14,B01D53/22,C01B3/50
(31) Priority Document No :10184335.7
(32) Priority Date :30/09/2010
(33) Name of priority country :EPO
(86) International Application No :PCT/EP2011/066781
Filing Date :27/09/2011
(87) International Publication No :WO 2012/041859
(61) Patent of Addition to Application Number :NA
Filing Date :NA
(62) Divisional to Application Number :NA
Filing Date :NA

(71)**Name of Applicant :**
1)BASF SE
Address of Applicant :67056 Ludwigshafen Germany
(72)**Name of Inventor :**
1)GARSUCH Arnd
2)PANCHENKO Alexander
3)BR„UNINGER Sigmar
4)SCHEIDEL Jens
5)THOME Alfred

(57) Abstract :
A process for working up an exhaust gas (A) from a system for producing hydroxylamine or hydroxylammonium salts by catalytic reduction of nitrogen monoxide with hydrogen wherein the exhaust gas (A) comprises nitrogen monoxide hydrogen dinitrogen monoxide nitrogen and ammonia and at least some of the hydrogen present in the exhaust gas (A) is separated off from the exhaust gas (A) by means of a gas tight membrane electrode assembly which comprises at least one selectively proton conducting membrane a retentate side a permeate side and on each side of the membrane at least one electrode catalyst wherein on the retentate side of the membrane at least some of the hydrogen is oxidized to protons at the anode catalyst and the protons after crossing the membrane are on the permeate side at the cathode catalyst according to (I) reduced to hydrogen and/or (II) reacted with oxygen to form water wherein the oxygen originates from an oxygen comprising stream (O) which is contacted with the permeate side.

No. of Pages : 20 No. of Claims : 15

(12) PATENT APPLICATION PUBLICATION
(19) INDIA
(22) Date of filing of Application :07/10/2013
(21) Application No.8112/CHENP/2013 A
(43) Publication Date : 07/11/2014

(54) Title of the invention : WAVELENGTH MANAGEMENT IN MULTIPLE WAVELENGTH PASSIVE OPTICAL NETWORKS

(51) International classification :H04Q11/00,H04J14/02,H04B10/02
(31) Priority Document No :61/473442
(32) Priority Date :08/04/2011
(33) Name of priority country :U.S.A.
(86) International Application No :PCT/CN2012/073662
Filing Date :09/04/2012
(87) International Publication No :WO 2012/136155
(61) Patent of Addition to Application Number :NA
Filing Date :NA
(62) Divisional to Application Number :NA
Filing Date :NA

(71)**Name of Applicant :**
1)HUAWEI TECHNOLOGIES CO. LTD.
Address of Applicant :Huawei Administration Building Bantian Longgang Shenzhen Guangdong 518129 China
(72)**Name of Inventor :**
1)LUO Yuanqiu
2)EFFENBERGER Frank J.

(57) Abstract :
A system for supporting wavelength management in a passive optical network (PON) comprising an optical line terminal (OLT) configured to send an wavelength assignment for optical network unit (ONU) communications based on a wavelength tunability capability and an ONU coupled to the OLT and configured to send the wavelength tunability capability to the OLT wherein the wavelength assignment and the wavelength tunability capability are sent in media access control (MAC) messages. Also disclosed is an apparatus of an OLT for supporting wavelength management comprising one or more component configured to couple to an ONU and exchange a wavelength assignment for transmission with the ONU based on a wavelength tunability of the ONU wherein the wavelength indication and the wavelength tunability are exchanged via MAC layer frames.

No. of Pages : 41 No. of Claims : 25

(12) PATENT APPLICATION PUBLICATION
(19) INDIA
(22) Date of filing of Application :08/10/2013
(21) Application No.8114/CHENP/2013 A
(43) Publication Date : 07/11/2014

(54) Title of the invention : WIND TURBINE BLADE WITH TAPERING ROOT BUSHINGS

(51) International classification :B29C70/86,F01D5/28,F03D1/06
(31) Priority Document No :11161906.0
(32) Priority Date :11/04/2011
(33) Name of priority country :EPO
(86) International Application No :PCT/EP2012/056552
Filing Date :11/04/2012
(87) International Publication No :WO 2012/140062
(61) Patent of Addition to Application Number :NA
Filing Date :NA
(62) Divisional to Application Number :NA
Filing Date :NA

(71)**Name of Applicant :**
1)LM WP PATENT HOLDING A/S
Address of Applicant :Jupitervej 6 DK 6000 Kolding Denmark
(72)**Name of Inventor :**
1)DAHL Martin
2)MORTENSEN Bjarne Krab
3)HORNBLOW Benjamin

(57) Abstract :
A wind turbine blade for a wind turbine is a shell structure of a fibre reinforced composite and comprises a root region and an airfoil region. The root region has a ring shaped cross section and comprises a plurality of elongated bushings (7) with an inner thread (22) and which are embedded interspaced in the fibre reinforced polymer so as to substantially follow the circumference of the root region and allow access from the outside to the inner threads (22). The bushings (7) are formed conically tapering from a second end towards a first end thereof the first end of the bushing (7) being arranged at the end face of the root region.

No. of Pages : 28 No. of Claims : 16

(12) PATENT APPLICATION PUBLICATION
(19) INDIA
(22) Date of filing of Application :25/11/2013
(21) Application No.9415/CHENP/2013 A
(43) Publication Date : 07/11/2014

(54) Title of the invention : ASPHALT COMPOSITION

(51) International classification :C08K5/36,C08K5/41,C08L95/00
(31) Priority Document No :PCT/IN2011/000363
(32) Priority Date :25/05/2011
(33) Name of priority country :India
(86) International Application No :PCT/EP2012/059645
Filing Date :23/05/2012
(87) International Publication No :WO 2012/160116
(61) Patent of Addition to Application Number :NA
Filing Date :NA
(62) Divisional to Application Number :NA
Filing Date :NA

(71)**Name of Applicant :**
1)SHELL INTERNATIONALE RESEARCH MAATSCHAPPIJ B.V.
Address of Applicant :Carel van Bylandtlaan 30 NL 2596 HR The Hague Netherlands
(72)**Name of Inventor :**
1)ASHTEKAR Sunil
2)VAN DEN BERG Franciscus Gondulfus Antonius
3)CHUGHTAI Majid Jamshed
4)REYNHOUT Marinus Johannes
5)WAGLE Govind

(57) Abstract :
An asphalt composition comprising aggregate bitumen sulphur and an anionic surfactant is disclosed wherein the amount of anionic surfactant is from 0.05 wt% to 10 wt% based upon the weight of the sulphur. Methods of preparing asphalt compositions and asphalt pavements are also disclosed.

No. of Pages : 27 No. of Claims : 14

(12) PATENT APPLICATION PUBLICATION
(19) INDIA
(22) Date of filing of Application :25/11/2013
(21) Application No.9416/CHENP/2013 A
(43) Publication Date : 07/11/2014

(54) Title of the invention : GROUND ENGAGING WEAR MEMBER AND MEANS OF MECHANICAL ATTACHMENT

(51) International classification :E02F9/28
(31) Priority Document No :2011901961
(32) Priority Date :20/05/2011
(33) Name of priority country :Australia
(86) International Application No :PCT/AU2012/000564
Filing Date :21/05/2012
(87) International Publication No :WO 2012/159155
(61) Patent of Addition to Application Number :NA
Filing Date :NA
(62) Divisional to Application Number :NA
Filing Date :NA

(71)**Name of Applicant :**
1)SANDVIK SHARK PTY LTD
Address of Applicant :Level 1 346 William Street Northbridge Western Australia 6003 Australia
(72)**Name of Inventor :**
1)KARLSSON Bjorn Marten
2)DALLARD Bradley John
3)ONG Wei Cheng
4)FOO Daniel Tuan Yong

(57) Abstract :
A wear member assembly (10) has a wear member (22) a wear member receiver (20) with at least first and second contact portions and at least one aperture (80) to receive at least one wear member locating member (26) of the wear member. An attachment mechanism (44 46) releasably attaches the wear member to the receiver has at least one moveable attachment member (44) and at least one respective fastening means (44). Actuation of each of the fastening means moves the associated attachment member to apply a retaining force to one of the contact portions of the receiver and causes the respective wear member locating member to apply a retaining force to the other of the contact portions of the receiver. At least one of the receiver first and second contact portions has a sloped or tapered face (54 58) and the corresponding wear member locating member (26) or attachment member (44) has a slope or taper (52 56) such that contact between the wear member locating member slope/taper or attachment member slope/taper and a corresponding one of the wear member receiver sloped/tapered contact portions causes the wear member to positively locate to the receiver when the releasable fastening means is actuated thereby releasably retaining the wear member to the outer surface of the earth moving apparatus member.

No. of Pages : 49 No. of Claims : 34

(12) PATENT APPLICATION PUBLICATION
(19) INDIA
(22) Date of filing of Application :06/11/2013
(21) Application No.8918/CHENP/2013 A
(43) Publication Date : 07/11/2014

(54) Title of the invention : METHOD AND APPARATUS FOR REDUCING EMISSIONS AND/OR REDUCING FRICTION IN AN INTERNAL COMBUSTION ENGINE

(51) International classification :F02B77/02,F02B77/04,F01L3/04
(31) Priority Document No :61/497187
(32) Priority Date :15/06/2011
(33) Name of priority country :U.S.A.
(86) International Application No :PCT/US2012/042681
Filing Date :15/06/2012
(87) International Publication No :WO 2012/174386
(61) Patent of Addition to Application Number :NA
Filing Date :NA
(62) Divisional to Application Number :NA
Filing Date :NA

(71)**Name of Applicant :**
1)HENKEL AG & CO. KGAA
Address of Applicant :Henkelstrasse 67 40589 Duesseldorf Germany
(72)**Name of Inventor :**
1)DOLAN Shawn E.
2)GOLDING James P.

(57) Abstract :
A method and apparatus for reducing at least one of HC CO and NOx emissions from an operating internal combustion engine fueled by hydrocarbon or similar fuels such as alcohols wherein a portion of the internal combustion chamber has aluminum and/ or titanium containing surfaces coated with a titanium dioxide coating further comprising a dopant in and/or on the adherent titanium dioxide coating.

No. of Pages : 51 No. of Claims : 18

(12) PATENT APPLICATION PUBLICATION
(19) INDIA
(22) Date of filing of Application :06/11/2013
(21) Application No.8919/CHENP/2013 A
(43) Publication Date : 07/11/2014

(54) Title of the invention : STADIUM AND STOWING SEAT

(51) International classification :A47C1/00
(31) Priority Document No :61/488463
(32) Priority Date :20/05/2011
(33) Name of priority country :U.S.A.
(86) International Application No :PCT/US2012/038509
Filing Date :18/05/2012
(87) International Publication No :WO 2012/162123
(61) Patent of Addition to Application Number :NA
Filing Date :NA
(62) Divisional to Application Number :NA
Filing Date :NA

(71)**Name of Applicant :**
1)JOHNSON CONTROLS TECHNOLOGY COMPANY
Address of Applicant :915 East 32nd Street Holland MI 49423 U.S.A.
(72)**Name of Inventor :**
1)SEIBOLD Kurt A.

(57) Abstract :
A contoured collapsible seat assembly providing a compact size in the stadium position and also having the ability of the seat back to fold forward. More specifically a collapsible seat having reduced overall height and depth in the stadium position and reduced height in the stowed position.

No. of Pages : 28 No. of Claims : 15

(12) PATENT APPLICATION PUBLICATION
(19) INDIA
(22) Date of filing of Application :26/11/2013
(21) Application No.9455/CHENP/2013 A
(43) Publication Date : 07/11/2014

(54) Title of the invention : MEMORY WITH METADATA STORED IN A PORTION OF THE MEMORY PAGES

(51) International classification :G06F11/10
(31) Priority Document No :13/112132
(32) Priority Date :20/05/2011
(33) Name of priority country :U.S.A.
(86) International Application No :PCT/US2012/038794
Filing Date :21/05/2012
(87) International Publication No :WO 2012/162225
(61) Patent of Addition to Application Number :NA
Filing Date :NA
(62) Divisional to Application Number :NA
Filing Date :NA

(71)**Name of Applicant :**
1)QUALCOMM INCORPORATED
Address of Applicant :Attn: International IP Administration 5775 Morehouse Drive San Diego California 92121 U.S.A.
(72)**Name of Inventor :**
1)PLONDKE Erich James
2)CODRESCU Lucian
3)ANDERSON William C.

(57) Abstract :
Systems and method for configuring a page based memory device without pre existing dedicated metadata. The method includes reading metadata from a metadata portion of a page of the memory device and determining a characteristic of the page based on the metadata. The memory device may be configured as a cache. The metadata may include address tags such that determining the characteristic may include determining if desired information is present in the page and reading the desired information if it is determined to be present in the page. The metadata may also include error correcting code (ECC) such that determining the characteristic may include detecting errors present in data stored in the page. The metadata may further include directory information memory coherency information or dirty/valid/lock information.

No. of Pages : 25 No. of Claims : 27

(12) PATENT APPLICATION PUBLICATION
(19) INDIA
(22) Date of filing of Application :25/11/2013
(21) Application No.9456/CHENP/2013 A
(43) Publication Date : 07/11/2014

(54) Title of the invention : IMPROVEMENTS IN INTEGRATED DRYING GASIFICATION

(51) International classification :F26B3/10,C10J3/50,C10J3/54
(31) Priority Document No :2011901738
(32) Priority Date :09/05/2011
(33) Name of priority country :Australia
(86) International Application No :PCT/AU2012/000497
Filing Date :09/05/2012
(87) International Publication No :WO 2012/151625
(61) Patent of Addition to Application Number :NA
Filing Date :NA
(62) Divisional to Application Number :NA
Filing Date :NA

(71)**Name of Applicant :**
1)HRL TREASURY (IDGCC) PTY LTD
Address of Applicant :Level 1 Unit 9 677 Springvale Road Mulgrave Victoria 3170 Australia
(72)**Name of Inventor :**
1)ANDERSON Bernard
2)BLATCHFORD Alex
3)STEPHANOU Tom

(57) Abstract :
An integrated drying gasification system comprises a gasifier for gasifying carbonaceous fuel to produce hot product gas and an entrained flow dryer which receives the hot product gas to dry the carbonaceous fuel prior to gasification. At least one inlet to the gasifier communicates one or more additional gases from the system such as recycled syngas steam and/or recycled carbon dioxide to the gasifier to generate an increased hot product gas mass flow rate from the gasifier. The system may comprise a plurality of lock hopper systems coupled to the entrained flow dryer. At least one intermediate storage vessel may be provided in one or more feed legs to the gasifier maintain a constant supply of carbonaceous fuel to the gasifier for a temporary period independently of carbonaceous fuel supplied to the entrained flow dryer.

No. of Pages : 25 No. of Claims : 25

(12) PATENT APPLICATION PUBLICATION
(19) INDIA
(22) Date of filing of Application :26/11/2013
(21) Application No.9459/CHENP/2013 A
(43) Publication Date : 07/11/2014

(54) Title of the invention : APPARATUS FOR CONDITIONING PREFORMS AND METHOD USING IT

(51) International classification :B29C49/64,B29B13/02
(31) Priority Document No :1107499.4
(32) Priority Date :05/05/2011
(33) Name of priority country :U.K.
(86) International Application No :PCT/EP2012/058268
Filing Date :04/05/2012
(87) International Publication No :WO 2012/150342
(61) Patent of Addition to Application Number :NA
Filing Date :NA
(62) Divisional to Application Number :NA
Filing Date :NA

(71)**Name of Applicant :**
1)GR8 ENGINEERING LIMITED
Address of Applicant :Unit 26 St. James Industrial Estate Chichester West Sussex Sussex U.K.
(72)**Name of Inventor :**
1)CLARKE Peter Reginald

(57) Abstract :
An apparatus (2) for reheating and conditioning an elongate preform (50) for forming a blow moulded container said apparatus (2) comprising: a receiver (4) including an elongate annular non cylindrical inner surface portion (13) wherein the surface portion (13) defines a cavity (8) and is adapted to engage with an elongate outer surface (68) of an elongate preform (50) to transfer heat thereto by conduction from said surface portion (13) wherein the surface portion (13) includes a three dimensional relief (100) to provide substantially non uniform contact between the receiver (4) and the elongate preform (50); and means (20 22) for heating said receiver (4).

No. of Pages : 29 No. of Claims : 30

(12) PATENT APPLICATION PUBLICATION
(19) INDIA
(22) Date of filing of Application :18/10/2013
(21) Application No.8434/CHENP/2013 A
(43) Publication Date : 07/11/2014

(54) Title of the invention : SHAPED BODY CONTAINING POROUS AROMATIC FRAMEWORK (PAF) MATERIAL

(51) International classification :B01J20/26,C08K3/22,C08K3/34
(31) Priority Document No :1394/CHE/2011
(32) Priority Date :21/04/2011
(33) Name of priority country :India
(86) International Application No :PCT/IB2012/051966
Filing Date :19/04/2012
(87) International Publication No:WO 2012/143878
(61) Patent of Addition to Application Number :NA
Filing Date :NA
(62) Divisional to Application Number :NA
Filing Date :NA

(71)**Name of Applicant :**
1)BASF SE
Address of Applicant :67056 Ludwigshafen Germany
(72)**Name of Inventor :**
1)GAAB Manuela
2)MAURER Stefan
3)KRAHNERT Wolf R¼diger
4)KOSTUR Milan
5)MLLER Ulrich
6)GOKHALE Ranjit
7)HINDALEKAR Shrirang Bhikaji

(57) Abstract :
THE PRESENT INVENTION RELATES TO SHAPED BODIES OF COMPOSITIONS COMPRISING A POROUS AROMATIC COVALENT FRAMEWORK POLYMER WHEREIN THE POLYMER COMPRISES AT LEAST ONE MONOMER UNIT THE AT LEAST ONE MONOMER UNIT COMPRISING AT LEAST ONE AROMATIC RING AND THE AT LEAST ONE MONOMER UNIT HAVING AT LEAST THREE BINDING SITES TO ADJACENT MONOMER UNITS IN THE POLYMER AND A CORE WHEREIN THE AT LEAST THREE BINDING SITES ARE LOCATED ON AT LEAST ONE ATOM OF THE CORE AND WHEREIN THE AT LEAST ONE ATOM IS FREE OF COVALENT BONDS TO HYDROGEN; AND AT LEAST ONE BINDER ADDITIVE. THE INVENTION ALSO RELATES TO METHODS FOR THE PREPARATION OF SAID SHAPED BODIES AND THEIR USES.

No. of Pages : 21 No. of Claims : 16

(12) PATENT APPLICATION PUBLICATION
(19) INDIA
(22) Date of filing of Application :18/11/2013
(21) Application No.9195/CHENP/2013 A
(43) Publication Date : 07/11/2014

(54) Title of the invention : EXPRESSION VECTORS FOR AN IMPROVED PROTEIN SECRETION

(51) International classification :C12N15/00
(31) Priority Document No :10 2011 118 032.3
(32) Priority Date :31/05/2011
(33) Name of priority country :Germany
(86) International Application No :PCT/EP2012/059901
Filing Date :25/05/2012
(87) International Publication No :WO 2012/163855
(61) Patent of Addition to Application Number :NA
Filing Date :NA
(62) Divisional to Application Number :NA
Filing Date :NA

(71)**Name of Applicant :**
1)BASF SE
Address of Applicant :67056 Ludwigshafen Germany
(72)**Name of Inventor :**
1)DEGERING Christian
2)EGGERT Thorsten
3)EVERS Stefan
4)MAURER Karl Heinz
5)BONGAERTS Johannes

(57) Abstract :
The aim of the invention is to improve the secretion of a protein from a host cell in order to increase the product yield of protein in a fermentation process. This is achieved by an expression vector comprising a) a promoter sequence and b) a nucleic acid sequence that codes for a protein. The protein comprises a signal peptide and an additional amino acid sequence and the signal peptide comprises an amino acid sequence that is at least 80% identical to the amino acid sequence specified in SEQ ID NO. 2 at least 80% identical to the amino acid sequence specified in SEQ ID NO. 4 at least 80% identical to the amino acid sequence specified in SEQ ID NO. 6 or the signal peptide comprises an amino acid sequence that is structurally homologous to at least one of said sequences.

No. of Pages : 29 No. of Claims : 10

(12) PATENT APPLICATION PUBLICATION
(19) INDIA
(22) Date of filing of Application :18/11/2013
(21) Application No.9197/CHENP/2013 A
(43) Publication Date : 07/11/2014

(54) Title of the invention : METHODS AND APPARATUSES FOR FREQUENCY SPECTRUM SHARING BETWEEN NETWORK OPERATORS

(51) International classification	:H04W16/14,H04W16/06,H04W36/22
(31) Priority Document No	:61/486200
(32) Priority Date	:13/05/2011
(33) Name of priority country	:U.S.A.
(86) International Application No	:PCT/US2012/037604
Filing Date	:11/05/2012
(87) International Publication No	:WO 2012/158548
(61) Patent of Addition to Application Number	:NA
Filing Date	:NA
(62) Divisional to Application Number	:NA
Filing Date	:NA

(71)**Name of Applicant :**
1)QUALCOMM INCORPORATED
Address of Applicant :Attn: International IP Administration 5775 Morehouse Drive San Diego CA 92121 1714 U.S.A.
(72)**Name of Inventor :**
1)GAAL Peter
2)BARBIERI Alan
3)PRAKASH Rajat
4)HUANG Yi

(57) Abstract :
Techniques are provided for frequency spectrum sharing that allows secondary operators to access a frequency band of a primary operator without interfering with the primary operator s use of the band while ensuring service continuity for devices of the secondary operators. For example there is provided a method that may involve identifying an outage on a first channel of a plurality of channels of a spectrum wherein each of the plurality of channels is allocated to one of a plurality of operators. The method may involve migrating all mobile stations in communication over the first channel of the plurality of channels to at least one other channel of the plurality of channels during the outage.

No. of Pages : 38 No. of Claims : 21

(12) PATENT APPLICATION PUBLICATION
(19) INDIA
(22) Date of filing of Application :28/11/2013
(21) Application No.9551/CHENP/2013 A
(43) Publication Date : 07/11/2014

(54) Title of the invention : CYTOTOXIC T CELL INDUCER

(51) International classification	:A61K39/00,A61K35/76,A61K39/12
(31) Priority Document No	:2011107874
(32) Priority Date	:13/05/2011
(33) Name of priority country	:Japan
(86) International Application No	:PCT/JP2012/060910
Filing Date	:24/04/2012
(87) International Publication No	:WO 2012/157408
(61) Patent of Addition to Application Number	:NA
Filing Date	:NA
(62) Divisional to Application Number	:NA
Filing Date	:NA

(71)**Name of Applicant :**
1)Tokyo Institute of Technology
Address of Applicant :2 12 1 Ookayama Meguro ku Tokyo 1528550 Japan
2)SAITAMA MEDICAL UNIVERSITY
(72)**Name of Inventor :**
1)HANDA Hiroshi
2)KAWANO Masaaki
3)MATSUI Masanori

(57) Abstract :
The purpose of the present invention is to allow a peptide to exhibit a sufficient effect as a vaccine in the absence of any adjuvant. Provided is a cytotoxic T cell inducer comprising virus like particles each of which is composed of VP1 of simian virus 40 and which is characterized in that a T cell epitope peptide is inserted in a DE loop and/or an HI loop of the VP1.

No. of Pages : 86 No. of Claims : 10

(12) PATENT APPLICATION PUBLICATION
(19) INDIA
(22) Date of filing of Application :28/11/2013
(21) Application No.9553/CHENP/2013 A
(43) Publication Date : 07/11/2014

(54) Title of the invention : DEVICE FOR TRANSMITTING ROTATIONAL ENERGY AND WIND ENERGY PLANT WHICH IS EQUIPPED THEREWITH

(51) International classification :F16H1/22,F03D9/00
(31) Priority Document No :10 2011 019 002.3
(32) Priority Date :28/04/2011
(33) Name of priority country :Germany
(86) International Application No :PCT/EP2012/001817
Filing Date :27/04/2012
(87) International Publication No :WO 2012/146382
(61) Patent of Addition to Application Number :NA
Filing Date :NA
(62) Divisional to Application Number :NA
Filing Date :NA

(71)**Name of Applicant :**
1)IMO HOLDING GMBH
Address of Applicant :Imostrasse 1 91350 Gremsdorf Germany
(72)**Name of Inventor :**
1)IMO HOLDING GMBH

(57) Abstract :
The invention is directed firstly to a gear mechanism for distributing the input torque from a drive to two or more outputs comprising one or two rotationally symmetrical connection elements with in each case one flat connection surface for the rotationally fixed connection to two different machine or system elements or firstly to a machine or system element and secondly a chassis or foundation wherein the two rotationally symmetrical connection elements are oriented in such a way that their axes of symmetry run coaxially with respect to one another and their connection surfaces face away from one another wherein furthermore a gap is situated between the two connection elements in which gap at least one anti friction bearing is arranged as main bearing for mounting the two connection elements on one another such that they can be moved rotationally about a main bearing rotational axis which corresponds to the common axis of symmetry of both connection elements and wherein at least one circumferential surface of a connection element is provided with a serration which runs around it and wherein the non serrated connection element has a section which faces the serration of the serrated connection element and has one or more cavities which are open towards the serration for receiving toothed gearwheels wherein an end side opening is provided in the non serrated connection element for each gearwheel for discharging the respective output torque and approximately aligned with said opening at least one closed annular region for supporting a bearing which is arranged in the axial direction between the connection surfaces of the two connection elements for the relevant gearwheel as the wheel bearing thereof with the result that the relevant gearwheel rotates about an auxiliary rotational axis which is offset eccentrically with respect to the main bearing rotational axis but is approximately parallel thereto and meshes with the serration of the serrated connection element; and secondly is directed to a wind energy plant which is equipped with a gear mechanism of this type.

No. of Pages : 64 No. of Claims : 32

(12) PATENT APPLICATION PUBLICATION
(19) INDIA
(22) Date of filing of Application :11/10/2013
(21) Application No.8267/CHENP/2013 A
(43) Publication Date : 07/11/2014

(54) Title of the invention : CONTRAST DEPENDENT RESOLUTION IMAGE

(51) International classification :G06T5/50,G06T11/00
(31) Priority Document No :61/468126
(32) Priority Date :28/03/2011
(33) Name of priority country :U.S.A.
(86) International Application No :PCT/IB2012/051266
Filing Date :16/03/2012
(87) International Publication No :WO 2012/131520
(61) Patent of Addition to Application Number :NA
Filing Date :NA
(62) Divisional to Application Number :NA
Filing Date :NA

(71)**Name of Applicant :**
1)KONINKLIJKE PHILIPS N.V.
Address of Applicant :High Tech Campus 5 NL 5656 AE Eindhoven Netherlands
(72)**Name of Inventor :**
1)BROWN Kevin

(57) Abstract :
A method for processing one or more reconstructed images includes receiving a first reconstructed image having a first image resolution and receiving a second reconstructed image having a second image resolution. The first resolution is greater than the second resolution. The method further includes generating a contrast dependent resolution image by combining the first and second reconstructed images single image so that the first reconstructed image contributes to a greater degree to the contrast dependent resolution image for higher contrasts regions of the images and the second reconstructed image contributes to a greater degree to the contrast dependent resolution image for lower contrasts regions of the images.

No. of Pages : 20 No. of Claims : 21

(12) PATENT APPLICATION PUBLICATION
(19) INDIA
(22) Date of filing of Application :11/10/2013
(21) Application No.8268/CHENP/2013 A
(43) Publication Date : 07/11/2014

(54) Title of the invention : SYSTEM AND METHOD FOR PROVIDING FAMILY MODE FOR MONITORING DEVICES

(51) International classification :G06F19/00
(31) Priority Document No :61/468086
(32) Priority Date :28/03/2011
(33) Name of priority country :U.S.A.
(86) International Application No :PCT/IB2012/051362
Filing Date :22/03/2012
(87) International Publication No :WO 2012/131546
(61) Patent of Addition to Application Number :NA
Filing Date :NA
(62) Divisional to Application Number :NA
Filing Date :NA

(71)**Name of Applicant :**
1)KONINKLIJKE PHILIPS N.V.
Address of Applicant :High Tech Campus 5 NL 5656 AE Eindhoven Netherlands
2)PHILIPS INTELLECTUAL PROPERTY & STANDARDS GMBH
(72)**Name of Inventor :**
1)LORD William Palmer
2)VAN ZON Cornelis Conradus Adrianus Maria
3)PAUWS Steffen Clarence
4)TE VRUGT Juergen

(57) Abstract :
A device having a sensor detecting patient physiological data a detection element detecting whether a medical professional is present in a patient s room and a display. If a medical professional is present in the patient s room the display displays a first display mode the first display mode including the patient physiological data. If a medical professional is not present in the patient s room the display displays a second display mode the second display mode being adapted for viewing by lay viewers.

No. of Pages : 21 No. of Claims : 20

(12) PATENT APPLICATION PUBLICATION
(19) INDIA
(22) Date of filing of Application :29/11/2013
(21) Application No.9609/CHENP/2013 A
(43) Publication Date : 07/11/2014

(54) Title of the invention : DETERMINING A FLOW CHARACTERISTIC OF AN OBJECT BEING MOVABLE IN AN ELEMENT

(51) International classification :A61B5/00,A61B5/026,A61B3/12
(31) Priority Document No :11168498.1
(32) Priority Date :01/06/2011
(33) Name of priority country :EPO
(86) International Application No :PCT/IB2012/052557
Filing Date :22/05/2012
(87) International Publication No :WO 2012/164438
(61) Patent of Addition to Application Number :NA
Filing Date :NA
(62) Divisional to Application Number :NA
Filing Date :NA

(71)**Name of Applicant :**
1)KONINKLIJKE PHILIPS N.V.
Address of Applicant :High Tech Campus 5 NL 5656 AE Eindhoven Netherlands
(72)**Name of Inventor :**
1)VAN DER LEE Alexander Marc
2)VEEN Jeroen

(57) Abstract :
A sensor device (340) for determining a flow characteristic of an object (341) being movable in an element (342) comprises a light emitting unit (344) configured for emitting light towards the element (342) and a light detecting unit (344) configured for detecting light scattered back from the element (342). The sensor device (340) comprises an optical unit (346) configured for spatially separating a light incidence element portion (348) of the element (342) and a light detection element portion (350) of the element (342) from one another wherein the light incidence element portion (348) is associated with the emitted light inciding on the element (342) and the light detection element portion (350) is associated with the back scattered light scattered back from the element (342) for detection. The sensor device (340) comprises a determining unit (358) configured for determining the flow characteristic of the object (341) being movable in the element (342) based on light indicative of the emitted light and the detected back scattered light. The sensor device (340) allows for an accurate and easy determination of the flow characteristic of the object (341).

No. of Pages : 25 No. of Claims : 14

(12) PATENT APPLICATION PUBLICATION
(19) INDIA
(22) Date of filing of Application :07/03/2013
(21) Application No.982/CHE/2013 A
(43) Publication Date : 07/11/2014

(54) Title of the invention : MULTILEVEL VEHICLE ROOF SUPPORTING A DEPLOYABLE SOLAR ARRAY

(51) International classification :F24J
(31) Priority Document No :61/849,659
(32) Priority Date :31/01/2013
(33) Name of priority country :U.S.A.
(86) International Application No :NA
Filing Date :NA
(87) International Publication No : NA
(61) Patent of Addition to Application Number :NA
Filing Date :NA
(62) Divisional to Application Number :NA
Filing Date :NA

(71)**Name of Applicant :**
1)BENJAMIN DAVID FREEMAN
Address of Applicant :4411 FLORIDA AVE., NEWTON SQUARE, PA 19073 U.S.A.
(72)**Name of Inventor :**
1)BENJAMIN DAVID FREEMAN

(57) Abstract :
The device is a vehicle with a carefully designed multi-layered roof and with a solar array consisting of at least three solar panels mounted on various parts of that roof. When the vehicle is being driven, none of the solar panels will extend beyond the outer perimeter of the vehicle. When the vehicle is parked, the various solar panels can be repositioned in such a way that their total footprint is more than twice the total footprint of the vehicle. It is highly recommended that this vehicle will also feature an onboard computer that can help the driver do a variety of tasks that are not normally necessary for typical vehicles. The reason that the onboard computer should be an integral part of this device is that decisions about how, why and when to deploy solar panels and other mechanisms, along with decisions about when to stop for recharging involve levels of information processing which a normal person would be better off allowing the onboard computer to accomplish.

No. of Pages : 67 No. of Claims : 14

(12) PATENT APPLICATION PUBLICATION
(19) INDIA
(22) Date of filing of Application :08/10/2013
(21) Application No.8146/CHENP/2013 A
(43) Publication Date : 07/11/2014

(54) Title of the invention : COMPOSITE ACOUSTIC BACKING WITH HIGH THERMAL CONDUCTIVITY FOR ULTRASOUND TRANSDUCER ARRAY

(51) International classification :G10K11/00,B06B1/06
(31) Priority Document No :61/453690
(32) Priority Date :17/03/2011
(33) Name of priority country :U.S.A.
(86) International Application No :PCT/IB2012/051205
Filing Date :14/03/2012
(87) International Publication No :WO 2012/123906
(61) Patent of Addition to Application Number :NA
Filing Date :NA
(62) Divisional to Application Number :NA
Filing Date :NA

(71)**Name of Applicant :**
1)KONINKLIJKE PHILIPS N.V.
Address of Applicant :High Tech Campus 5 NL 5656 AE Eindhoven Netherlands
(72)**Name of Inventor :**
1)DAVIDSEN Richard Edward
2)SUDOL Wojtek

(57) Abstract :
A backing block for an ultrasonic transducer array stack of an ultrasound probe is formed as a composite structure of material of high thermal conductivity in which is embedded a structure of acoustic dampening material. In a constructed embodiment the composite structure is formed from a block of thermally conductive graphite in which a plurality of cylindrical holes are formed which are filled with acoustic dampening material. The holes are angled in relation to the Z axis direction from the rear of the transducer stack so that reverberation energy traveling in that direction will encounter acoustic dampening material. The graphite around the holes is effective to conduct heat to the rear of the probe and away from the transducer stack and its ASIC.

No. of Pages : 18 No. of Claims : 15

(12) PATENT APPLICATION PUBLICATION
(19) INDIA
(22) Date of filing of Application :08/10/2013
(21) Application No.8147/CHENP/2013 A
(43) Publication Date : 07/11/2014

(54) Title of the invention : RESTRICTION OF THE IMAGING REGION FOR MRI IN AN INHOMOGENEOUS MAGNETIC FIELD

(51) International classification :G01R33/48,G01R33/565,G01R33/44
(31) Priority Document No :11158694.7
(32) Priority Date :17/03/2011
(33) Name of priority country :EPO
(86) International Application No :PCT/IB2012/050661
Filing Date :14/02/2012
(87) International Publication No :WO 2012/123830
(61) Patent of Addition to Application Number :NA
Filing Date :NA
(62) Divisional to Application Number :NA
Filing Date :NA

(71)**Name of Applicant :**
1)KONINKLIJKE PHILIPS N.V.
Address of Applicant :High Tech Campus 5 NL 5656 AE Eindhoven Netherlands
(72)**Name of Inventor :**
1)DEN HARDER Johan Michiel
2)BOS Clemens
3)BLUME Ulrike Andrea

(57) Abstract :
The invention relates to magnetic resonance imaging in the vicinity of a metallic object (like for instance a metal implant) where severe spatial perturbations of the static magnetic field occur. In order to suppress the back folding of distant off resonant signals into the region of interest the imaging volume is spatially restricted by means of selection gradients applied concurrently with the excitation and the refocusing RF pulses in a spin echo sequence. The selection gradient applied during the excitation pulse has an amplitude and/or a polarity different from that of the selection gradient applied during the refocusing pulse so that the respectively selected slices in an off resonance frequency versus spatial coordinate diagram become tilted with respect to one another. The applied imaging technique may of the SEMAC or MAVRIC type and may incorporate compressed sensing parallel imaging fat suppression and/or SVD based noise reduction.

No. of Pages : 36 No. of Claims : 14

(12) PATENT APPLICATION PUBLICATION
(19) INDIA
(22) Date of filing of Application :08/10/2013
(21) Application No.8148/CHENP/2013 A
(43) Publication Date : 07/11/2014

(54) Title of the invention : ACCELERATED MAGNETIC RESONANCE THERMOMETRY

(51) International classification :G01R33/48,A61B5/055
(31) Priority Document No :11158606.1
(32) Priority Date :17/03/2011
(33) Name of priority country :EPO
(86) International Application No :PCT/IB2012/050986
Filing Date :02/03/2012
(87) International Publication No :WO 2012/123846
(61) Patent of Addition to Application Number :NA
Filing Date :NA
(62) Divisional to Application Number :NA
Filing Date :NA

(71)**Name of Applicant :**
1)KONINKLIJKE PHILIPS N.V.
Address of Applicant :High Tech Campus 5 NL 5656 AE Eindhoven Netherlands
(72)**Name of Inventor :**
1)KHLER Max Oskar
2)VAHALA Erkki Tapani
3)NURMILAUKAS Kirsi Ilona

(57) Abstract :
A medical apparatus (300 400 500 600) comprising a magnetic resonance imaging system (302). The medical apparatus further comprises a memory (332) storing machine readable instructions (352 354 356 358 470 472 474) for execution by a processor (326). Execution of the instructions causes the processor to acquire (100 202) spectroscopic magnetic resonance data (334). Execution of the instructions further cause the processor to calculate (102 204) a calibration thermal map (336) using the spectroscopic magnetic resonance data. Execution of the instructions further causes the processor to acquire (104 206) baseline magnetic resonance thermometry data (338). Execution of the instructions further causes the processor to repeatedly acquire (106 212) magnetic resonance thermometry data (340). Execution of the instructions further cause the processor to calculate (108 214) a temperature map (351) using the magnetic resonance thermometry data the calibration thermal map and the baseline magnetic resonance thermometry data.

No. of Pages : 40 No. of Claims : 14

(12) PATENT APPLICATION PUBLICATION
(19) INDIA
(22) Date of filing of Application :07/03/2013
(21) Application No.985/CHE/2013 A
(43) Publication Date : 07/11/2014

(54) Title of the invention : PACKAGE DISCHARGING DEVICE AND YARN WINDING MACHINE

(51) International classification :B65D
(31) Priority Document No :2012-124449
(32) Priority Date :31/05/2012
(33) Name of priority country :Japan
(86) International Application No :NA
Filing Date :NA
(87) International Publication No : NA
(61) Patent of Addition to Application Number :NA
Filing Date :NA
(62) Divisional to Application Number :NA
Filing Date :NA

(71)**Name of Applicant :**
1)MURATA MACHINERY. LTD.
Address of Applicant :3 MINAMI OCHIAI-CHO, KISSHOIN, MINAMI-KU, KYOTO-SHI, KYOTO 601-8326 Japan
(72)**Name of Inventor :**
1)YOSHIHIRO KINO

(57) Abstract :
A package discharging device that discharges a package including at least a winding tube held by a holding section, the package discharging device comprising:

No. of Pages : 48 No. of Claims : 13

(12) PATENT APPLICATION PUBLICATION
(19) INDIA
(22) Date of filing of Application :05/11/2013
(21) Application No.8866/CHENP/2013 A
(43) Publication Date : 07/11/2014

(54) Title of the invention : PISTON ROD ANCHORING

(51) International classification :A61M5/315
(31) Priority Document No :11163222.0
(32) Priority Date :20/04/2011
(33) Name of priority country :EPO
(86) International Application No :PCT/EP2012/057240
Filing Date :20/04/2012
(87) International Publication No :WO 2012/143494
(61) Patent of Addition to Application Number :NA
Filing Date :NA
(62) Divisional to Application Number :NA
Filing Date :NA

(71)**Name of Applicant :**
1)NOVO NORDISK HEALTH CARE AG
Address of Applicant :Thurgauerstrasse 36/38 CH 8050 Zurich Switzerland
(72)**Name of Inventor :**
1)MELANDER Matias

(57) Abstract :
A piston assembly having a piston (10) and a piston/piston rod coupling arrangement wherein the piston has a cavity (12) with a catch portion (15) and the piston rod (20) has a coupling member in form of deflectable flaps (23) for engagement with the catch portion (15) inside the cavity (12) of piston (10). The flaps (23) of the coupling member have a radially variable dimension which is biased radially outwardly by dedicated bias means (26) upon entry of the coupling member into the cavity (12) of the piston (10).

No. of Pages : 13 No. of Claims : 9

(12) PATENT APPLICATION PUBLICATION
(19) INDIA
(22) Date of filing of Application :18/11/2013
(21) Application No.9215/CHENP/2013 A
(43) Publication Date : 07/11/2014

(54) Title of the invention : TRUNCATED HUMAN PAPILLOMAVIRUS TYPE 33 PROTEIN L1

(51) International classification :C07K14/025,C12N15/37,C12N15/63
(31) Priority Document No :201110136560.6
(32) Priority Date :25/05/2011
(33) Name of priority country :China
(86) International Application No :PCT/CN2012/075865
Filing Date :22/05/2012
(87) International Publication No :WO 2012/159562
(61) Patent of Addition to Application Number :NA
Filing Date :NA
(62) Divisional to Application Number :NA
Filing Date :NA

(71)**Name of Applicant :**
1)XIAMEN UNIVERSITY
Address of Applicant :No.422 Si Ming Nan Road Siming District Xiamen Fujian 361005 China
2)XIAMEN INNOVAX BIOTECH CO. LTD.
(72)**Name of Inventor :**
1)LI Shaowei
2)KONG Xianglin
3)WEI Minxi
4)PAN Huirong
5)ZHANG Jun
6)XIA Ningshao

(57) Abstract :
Provided are a truncated human papillomavirus type 33 protein L1 an encoding sequence and a preparation method thereof a virus like particle consisting of the protein a vaccine comprising the virus like particle and a use thereof in preventing HPV infection and related diseases.

No. of Pages : 54 No. of Claims : 12

(12) PATENT APPLICATION PUBLICATION
(19) INDIA
(22) Date of filing of Application :30/10/2013
(21) Application No.8735/CHENP/2013 A
(43) Publication Date : 07/11/2014

(54) Title of the invention : METHODS OF PDCCH CAPACITY ENHANCEMENT IN LTE SYSTEMS

(51) International classification :H04W74/04,H04W88/08
(31) Priority Document No :61/481571
(32) Priority Date :02/05/2011
(33) Name of priority country :U.S.A.
(86) International Application No :PCT/CA2012/050277
Filing Date :01/05/2012
(87) International Publication No :WO 2012/149651
(61) Patent of Addition to Application Number :NA
Filing Date :NA
(62) Divisional to Application Number :NA
Filing Date :NA

(71)**Name of Applicant :**
1)BLACKBERRY LIMITED
Address of Applicant :295 Phillip Street Waterloo Ontario N2L 3W8 Canada
(72)**Name of Inventor :**
1)GAO Shiwei
2)XU Hua
3)YU Dongsheng
4)GUO Shiguang

(57) Abstract :
A method is provided for operating a transmission point in a cell in a wireless communication network. The method comprises in a procedure for generating a PDCCH the transmission point inserting a DMRS into at least one resource element in at least one REG in at least one CCE that contains the PDCCH wherein the PDCCH is intended only for at least one specific UE.

No. of Pages : 57 No. of Claims : 33

(12) PATENT APPLICATION PUBLICATION
(19) INDIA
(22) Date of filing of Application :30/10/2013
(21) Application No.8736/CHENP/2013 A
(43) Publication Date : 07/11/2014

(54) Title of the invention : METHODS OF PDCCH CAPACITY ENHANCEMENT IN LTE SYSTEMS BASED ON A TP SPECIFIC REFERENCE SIGNAL

(51) International classification :H04L27/26
(31) Priority Document No :61/481571
(32) Priority Date :02/05/2011
(33) Name of priority country :U.S.A.
(86) International Application No :PCT/US2012/035863
Filing Date :30/04/2012
(87) International Publication No :WO 2012/151164
(61) Patent of Addition to Application Number :NA
Filing Date :NA
(62) Divisional to Application Number :NA
Filing Date :NA

(71)**Name of Applicant :**
1)BLACKBERRY LIMITED
Address of Applicant :2200 University Avenue East Waterloo Ontario Canada N2K 0A7 Canada
(72)**Name of Inventor :**
1)XU Hua
2)SMITH Jack Antony
3)GAO Shiwei
4)YU Dongsheng
5)GUO Shiguang

(57) Abstract :
A method is provided for providing reference signal information in a cell including a plurality of transmission points in a wireless telecommunication system. The method comprises transmitting by one of a subset of transmission points in the cell at least one reference signal for demodulating a PDCCH wherein transmitting the at least one reference signal comprises transmitting the at least one reference signal in at least one CCE reserved in a PDCCH region for transmission of the at least one reference signal.

No. of Pages : 33 No. of Claims : 31

(12) PATENT APPLICATION PUBLICATION
(19) INDIA
(22) Date of filing of Application :31/10/2013
(21) Application No.8738/CHENP/2013 A
(43) Publication Date : 07/11/2014

(54) Title of the invention : PLANTS HAVING ONE OR MORE ENHANCED YIELD RELATED TRAITS AND METHOD FOR MAKING THE SAME

(51) International classification :A01H1/00,A01H5/00,C12N15/29
(31) Priority Document No :61/486788
(32) Priority Date :17/05/2011
(33) Name of priority country :U.S.A.
(86) International Application No :PCT/IB2012/052300
Filing Date :09/05/2012
(87) International Publication No :WO 2012/156865
(61) Patent of Addition to Application Number :NA
Filing Date :NA
(62) Divisional to Application Number :NA
Filing Date :NA

(71)**Name of Applicant :**
1)BASF PLANT SCIENCE COMPANY GMBH
Address of Applicant :67056 Ludwigshafen Germany
(72)**Name of Inventor :**
1)REUZEAU Christophe

(57) Abstract :
Provided is a method for enhancing yield related traits in plants by modulating expression of a nucleic acid encoding a PtMYB12L polypeptide in a plant. Also provided are plants having modulated expression of a nucleic acid encoding a PtMYB12L polypeptide which plants have enhanced yield related traits compared with control plants. Also provided are PtMYB12L encoding nucleic acids and constructs comprising the same useful in enhancing yield related traits in plants.

No. of Pages : 112 No. of Claims : 22

(12) PATENT APPLICATION PUBLICATION
(19) INDIA
(22) Date of filing of Application :29/11/2013
(21) Application No.9614/CHENP/2013 A
(43) Publication Date : 07/11/2014

(54) Title of the invention : METHOD OF ATTACHING A LIGHT EMITTING DEVICE TO A SUPPORT SUBSTRATE

(51) International classification :H01L33/62
(31) Priority Document No :61/491918
(32) Priority Date :01/06/2011
(33) Name of priority country :U.S.A.
(86) International Application No :PCT/IB2012/052533
Filing Date :21/05/2012
(87) International Publication No :WO 2012/164431
(61) Patent of Addition to Application Number :NA
Filing Date :NA
(62) Divisional to Application Number :NA
Filing Date :NA

(71)**Name of Applicant :**
1)KONINKLIJKE PHILIPS N.V.
Address of Applicant :High Tech Campus 5 NL 5656 AE Eindhoven Netherlands
(72)**Name of Inventor :**
1)STEIGERWALD Daniel Alexander
2)BHAT Jr´me Chandra
3)AKRAM Salman

(57) Abstract :
A method according to embodiments of the invention includes providing a wafer of semiconductor light emitting devices each semiconductor light emitting device including a light emitting layer sandwiched between an n type region and a p type region. A wafer of support substrates is provided each support substrate including a body. The wafer of semiconductor light emitting devices is bonded to the wafer of support substrates. Vias are formed extending through the entire thickness of the body of each support substrate.

No. of Pages : 23 No. of Claims : 16

(12) PATENT APPLICATION PUBLICATION
(19) INDIA
(22) Date of filing of Application :14/11/2013
(21) Application No.9150/CHENP/2013 A
(43) Publication Date : 07/11/2014

(54) Title of the invention : INTERVENTION BLOWOUT PREVENTER AND WELL INTERVENTION TOOL

(51) International classification :E21B33/064,E21B33/076
(31) Priority Document No :11172161.9
(32) Priority Date :30/06/2011
(33) Name of priority country :EPO
(86) International Application No :PCT/EP2012/062699
Filing Date :29/06/2012
(87) International Publication No :WO 2013/010777
(61) Patent of Addition to Application Number :NA
Filing Date :NA
(62) Divisional to Application Number :NA
Filing Date :NA

(71)**Name of Applicant :**
1)WELLTEC A/S
Address of Applicant :Gydevang 25 DK 3450 Aller¸d Denmark
(72)**Name of Inventor :**
1)HALLUNDB†K J¸rgen
2)VASQUES Ricardo Reves
3)IVERSEN Morten
4)MACAULAY Malcolm

(57) Abstract :
The present invention relates to an intervention blowout preventer (1) for being mounted on a well head (2) or a Christmas tree comprising a plurality of valves (3 4) arranged in fluid communication with each other connected and forming a tubular pipe (5) enclosing a cavity being in fluid communication with the well head when the intervention blowout preventer is mounted onto the well head and at least one plug (37) in the well head has been removed wherein the intervention blowout preventer further comprises a pressure reducing system (1) comprising a chamber (6) and a piston (7) arranged inside the chamber dividing the chamber into a first chamber part (8) and a second chamber part (9) the first chamber part being in fluid communication with the cavity and the second chamber part being filled with a compressible fluid such as gas. Furthermore the invention relates to a well intervention tool (100) a well intervention system (200) and a well intervention method.

No. of Pages : 21 No. of Claims : 19

(12) PATENT APPLICATION PUBLICATION
(19) INDIA
(22) Date of filing of Application :21/10/2013
(21) Application No.8446/CHENP/2013 A
(43) Publication Date : 07/11/2014

(54) Title of the invention : ANTI MOUSE AGGRUS MONOCLONAL ANTIBODY

(51) International classification :C07K16/28,A61K39/395,A61P7/02
(31) Priority Document No :2011062686
(32) Priority Date :22/03/2011
(33) Name of priority country :Japan
(86) International Application No :PCT/JP2012/056142
Filing Date :09/03/2012
(87) International Publication No :WO 2012/128082
(61) Patent of Addition to Application Number :NA
Filing Date :NA
(62) Divisional to Application Number :NA
Filing Date :NA

(71)**Name of Applicant :**
1)JAPANESE FOUNDATION FOR CANCER RESEARCH
Address of Applicant :3 8 31 Ariake Koto ku Tokyo 1358550 Japan
(72)**Name of Inventor :**
1)FUJITA Naoya
2)NAKAZAWA Yuya
3)TAKAGI Satoshi

(57) Abstract :
The invention of the application provides a monoclonal antibody or functional fragment thereof that is capable of recognizing epitopes of Aggrus consisting of the amino acid sequence represented by Sequence No. 1 3 or 4 and a monoclonal antibody or functional fragment thereof that is produced from a hybridoma of deposit No. FERM BP 11446 FERM BP 11447 FERM BP 11448 or FERM BP 11449. The invention provides the hybridoma and further provides an Aggrus CLEC 2 bond inhibitor and a pharmaceutical composition for the prevention of platelet aggregation or cancer metastasis and for the treatment of tumors or thrombosis that comprises the monoclonal antibody or functional fragment thereof.

No. of Pages : 46 No. of Claims : 9

(12) PATENT APPLICATION PUBLICATION
(19) INDIA
(22) Date of filing of Application :21/10/2013
(21) Application No.8447/CHENP/2013 A
(43) Publication Date : 07/11/2014

(54) Title of the invention : NO FILTER NO RUN FEATURE FOR FILTER

(51) International classification :F01M1/10,F01M11/03,B01D37/04
(31) Priority Document No :NA
(32) Priority Date :NA
(33) Name of priority country :NA
(86) International Application No :PCT/CN2011/073958
Filing Date :11/05/2011
(87) International Publication No :WO 2012/151749
(61) Patent of Addition to Application Number :NA
Filing Date :NA
(62) Divisional to Application Number :NA
Filing Date :NA

(71)**Name of Applicant :**
1)CUMMINS FILTRATION IP INC.
Address of Applicant :1400 73rd Avenue NE Minneapolis Minnesota 55432 U.S.A.
(72)**Name of Inventor :**
1)LI Hanhao
2)SHEN Ping
3)HOU Penghua
4)WANG Chunxi

(57) Abstract :
A filter cartridge is provided that is designed to actuate a valve that controls fluid flow into an outlet for discharging filtered fluid. The valve receives a ball at a first position which is axially movable between the first position and a second position. If a filter cartridge is not installed or an inappropriately designed filter cartridge is installed the ball is moved from the first position to the second position to seal an outlet opening of the outlet. If the described filter cartridge is installed the ball is retained at the first position by a holding member and the valve allows filtered fluid flow into the outlet opening.

No. of Pages : 32 No. of Claims : 27

(12) PATENT APPLICATION PUBLICATION
(19) INDIA
(22) Date of filing of Application :11/11/2013
(21) Application No.9039/CHENP/2013 A
(43) Publication Date : 07/11/2014

(54) Title of the invention : METHOD FOR PREPARING CATALYST FOR REMOVING NITROGEN OXIDES USING DRY BALL MILLING

(51) International classification :B01J23/22,B01J21/06,B01J37/04
(31) Priority Document No :1020110062201
(32) Priority Date :27/06/2011
(33) Name of priority country :Republic of Korea
(86) International Application No :PCT/KR2012/004024
Filing Date :22/05/2012
(87) International Publication No :WO 2013/002492
(61) Patent of Addition to Application Number :NA
Filing Date :NA
(62) Divisional to Application Number :NA
Filing Date :NA

(71)**Name of Applicant :**
1)KEPCO ENGINEERING & CONSTRUCTION COMPANY INC.
Address of Applicant :2354 Yonggudaero Giheung gu Yongin si Gyeonggi do 446 713 Republic of Korea
(72)**Name of Inventor :**
1)HONG Sung Ho
2)CHO Sung Pill
3)SHIN Chang Hoon
4)YANG Bok Yeon
5)SHIN Sang Woo
6)HONG Sung Chang
7)PARK Kwang Hee
8)KIM Sung Su
9)LEE Sang Moon
10)KWON Dong Wook

(57) Abstract :
Disclosed is a method for preparing a deNOx catalyst for removing nitrogen oxides (NOx) included in exhaust gas and the like. One embodiment of the present invention discloses a VO(vanadium pentoxide) TiO(titanium oxide) based deNOx catalyst for removing nitrogen oxides through selective catalystic reduction by dry ball milling crystalline titanium oxide (TiO) powder and crystalline vanadium pentoxide (VO) powder.

No. of Pages : 26 No. of Claims : 8

(12) PATENT APPLICATION PUBLICATION
(19) INDIA
(22) Date of filing of Application :20/11/2013
(21) Application No.9320/CHENP/2013 A
(43) Publication Date : 07/11/2014

(54) Title of the invention : GEMCITABINE IMMUNOASSAY

(51) International classification :G01N33/00,C07H19/00
(31) Priority Document No :13/114218
(32) Priority Date :24/05/2011
(33) Name of priority country :U.S.A.
(86) International Application No :PCT/US2012/036723
Filing Date :07/05/2012
(87) International Publication No :WO 2012/161948
(61) Patent of Addition to Application Number :NA
Filing Date :NA
(62) Divisional to Application Number :NA
Filing Date :NA

(71)**Name of Applicant :**
1)SALADAX BIOMEDICAL INC.
Address of Applicant :116 Research Drive Bethlehem PA 18015 U.S.A.
(72)**Name of Inventor :**
1)SALAMONE Salvatore J.
2)COURTNEY Jodi Blake
3)SARD Howard
4)SPEDALIERE Christopher

(57) Abstract :
The present invention comprises novel conjugates and immunogens derived from gemcitabine and unique antibodies generated by using gemcitabine linked immunogens which conjugates immunogens and antibodies are useful in immunoassays for the quantification and monitoring of gemcitabine in biological fluids.

No. of Pages : 49 No. of Claims : 40

(12) PATENT APPLICATION PUBLICATION
(19) INDIA
(22) Date of filing of Application :13/11/2013
(21) Application No.9082/CHENP/2013 A
(43) Publication Date : 07/11/2014

(54) Title of the invention : HEAD POSE ESTIMATION USING RGBD CAMERA

(51) International classification :G06T7/00,G06K9/00
(31) Priority Document No :61/487170
(32) Priority Date :17/05/2011
(33) Name of priority country :U.S.A.
(86) International Application No :PCT/US2012/036362
Filing Date :03/05/2012
(87) International Publication No :WO 2012/158361
(61) Patent of Addition to Application Number :NA
Filing Date :NA
(62) Divisional to Application Number :NA
Filing Date :NA

(71)**Name of Applicant :**
1)QUALCOMM Incorporated
Address of Applicant :ATTN: International IP Administration 5775 Morehouse Drive San Diego California 92121 1714 U.S.A.
(72)**Name of Inventor :**
1)SHARMA Piyush
2)SWAMINATHAN Ashwin
3)REZAIIFAR Ramin
4)XUE Qi

(57) Abstract :
A three dimensional pose of the head of a subject is determined based on depth data captured in multiple images. The multiple images of the head are captured e.g. by an RGBD camera. A rotation matrix and translation vector of the pose of the head relative to a reference pose is determined using the depth data. For example arbitrary feature points on the head may be extracted in each of the multiple images and provided along with corresponding depth data to an Extended Kalman filter with states including a rotation matrix and a translation vector associated with the reference pose for the head and a current orientation and a current position. The three dimensional pose of the head with respect to the reference pose is then determined based on the rotation matrix and the translation vector.

No. of Pages : 25 No. of Claims : 24

(12) PATENT APPLICATION PUBLICATION
(19) INDIA
(22) Date of filing of Application :13/11/2013
(21) Application No.9083/CHENP/2013 A
(43) Publication Date : 07/11/2014

(54) Title of the invention : STRUCTURE FOR LOWER VEHICLE BODY OF VEHICLE FRONT PART

(51) International classification :B62D25/20
(31) Priority Document No :2011223901
(32) Priority Date :11/10/2011
(33) Name of priority country :Japan
(86) International Application No :PCT/JP2012/062774
Filing Date :18/05/2012
(87) International Publication No :WO 2013/054564
(61) Patent of Addition to Application Number :NA
Filing Date :NA
(62) Divisional to Application Number :NA
Filing Date :NA

(71)**Name of Applicant :**
1)SUZUKI MOTOR CORPORATION
Address of Applicant :300 Takatsuka cho Minami ku Hamamatsu shi Shizuoka 4328611 Japan
(72)**Name of Inventor :**
1)MOCHIZUKI Shinei

(57) Abstract :
A structure for the lower vehicle body of a vehicle front part is configured so as to improve the rigidity of the lower vehicle body without a weight increase or the like. A suspension frame (10) is fastened to the joints between front side members (4) and floor side members (5). Dash side members (11) extend rearward and obliquely outward in the width direction from the fastening sections (P). The outer ends of the dash side members (11) are joined to the front ends of side sills (7). The front surfaces (6a) of the lower parts of side outer panels (6) are disposed in front of the front ends of the side sills (7). Dash side outer panels (3) the side outer panels (6) and dash side inner panels (2) are joined together at flanges (6b 2a 3a) at positions of the front surfaces (6a) of the lower parts of the side outer panels (6) the flanges (6b 2a 3a) being provided at the front ends of the panels (6 2 3) and extending in the vertical direction the front surfaces (6a) being formed as sloped surfaces which in a front end view slope rearward and obliquely downward toward the rear and which in a plan view slope rearward and obliquely outward.

No. of Pages : 21 No. of Claims : 4

(12) PATENT APPLICATION PUBLICATION
(19) INDIA
(22) Date of filing of Application :06/02/2013
(21) Application No.969/CHENP/2013 A
(43) Publication Date : 07/11/2014

(54) Title of the invention : CATALYTIC CONVERTER FOR REMOVING NITROGEN OXIDES FROM THE EXHAUST GAS OF DIESEL ENGINES

(51) International classification :F01N3/20,F01N3/08
(31) Priority Document No :10009478.8
(32) Priority Date :13/09/2010
(33) Name of priority country :EPO
(86) International Application No :PCT/EP2011/065533
Filing Date :08/09/2011
(87) International Publication No :WO 2012/034922
(61) Patent of Addition to Application Number :NA
Filing Date :NA
(62) Divisional to Application Number :NA
Filing Date :NA

(71)**Name of Applicant :**
1)UMICORE AG & CO. KG
Address of Applicant :Rodenbacher Chaussee 4 63457 Hanau Wolfgang Germany
(72)**Name of Inventor :**
1)SPURK Paul
2)SOEGER Nicola
3)MUELLER Elena
4)MALMBERG Stephan

(57) Abstract :
The invention relates to a catalytic converter for removing nitrogen oxides from the exhaust gas of diesel engines and to a method for reducing nitrogen oxides in the exhaust gas of diesel engines. The catalytic converter consists of a supporting body of length L and a catalytically active coating which for its part can be configured from one or more material zones. The material zones contain a copper containing zeolite or a compound similar to zeolite. Chabazite SAPO 34 ALPO 34 and zeolite are used here. Furthermore the material zones contain at least one compound selected from the group consisting of barium oxide barium hydroxide barium carbonate strontium oxide strontium hydroxide strontium carbonate praseodymium oxide lanthanum oxide magnesium oxide magnesium aluminium mixed oxide alkali metal oxide alkali metal hydroxide alkali metal carbonate and mixtures thereof. Precious metal can also optionally be contained in the catalytic converter.

No. of Pages : 25 No. of Claims : 14

(12) PATENT APPLICATION PUBLICATION
(19) INDIA
(22) Date of filing of Application :11/11/2013
(21) Application No.9049/CHENP/2013 A
(43) Publication Date : 07/11/2014

(54) Title of the invention : USER WEARABLE PORTABLE COMMUNICATIVE DEVICE

(51) International classification :A61B5/00
(31) Priority Document No :13/105925
(32) Priority Date :12/05/2011
(33) Name of priority country :U.S.A.
(86) International Application No :PCT/US2012/037856
Filing Date :14/05/2012
(87) International Publication No :WO 2012/155151
(61) Patent of Addition to Application Number :NA
Filing Date :NA
(62) Divisional to Application Number :NA
Filing Date :NA

(71)**Name of Applicant :**
1)RAJENDRA Padma Sadhu
Address of Applicant :18 Valley Wood Dr. Somerset NJ 08873 U.S.A.
(72)**Name of Inventor :**
1)RAJENDRA Padma Sadhu

(57) Abstract :
A user wearable portable communicative device and a method for establishing a communication between a remote health care monitoring center and a portable communicative device are disclosed. The portable communicative device includes a location tracking module for tracking a current location of the user through a communication network a plurality of user controllable switches for enabling the user to establish a voice based communicative interaction with a plurality of health care providers present over a remote health care monitoring center a physiological data collecting module for collecting the physiological data from a plurality of physiological data collecting devices of the user a motion detecting module for reducing an amount of power consumed by the portable communicative device and a plurality of reminder modules for alerting the user to get a medication at a predetermined time.

No. of Pages : 20 No. of Claims : 9

(12) PATENT APPLICATION PUBLICATION
(19) INDIA
(22) Date of filing of Application :14/11/2013
(21) Application No.9132/CHENP/2013 A
(43) Publication Date : 07/11/2014

(54) Title of the invention : STEEL PLATE WITH ULTRA HIGH STRENGTH AND ABRASION RESISTANCE AND MANUFACTURING PROCESS THEREOF

(51) International classification :C22C38/50,C22C38/28,C22C38/14
(31) Priority Document No :201110383513.1
(32) Priority Date :25/11/2011
(33) Name of priority country :China
(86) International Application No :PCT/CN2012/076058
Filing Date :25/05/2012
(87) International Publication No :WO 2013/075473
(61) Patent of Addition to Application Number :NA
Filing Date :NA
(62) Divisional to Application Number :NA
Filing Date :NA

(71)**Name of Applicant :**
1)BAOSHAN IRON & STEEL CO. LTD.
Address of Applicant :NO.885 FUJIN ROAD BAOSHAN DISTRICT Shanghai 201900 China
(72)**Name of Inventor :**
1)ZHANG Aiwen
2)WANG Guodong
3)JIAO Sihai

(57) Abstract :
The present invention provides a steel plate with high strength and abrasion resistance having a Brinell hardness of = HB 420. The components (wt%) thereof are: C: 0.205 0.25% Si: 0.20 1.00% Mn: 1.0 1.5% P=0.015% S=0.010% Al: 0.02 0.04% Ti: 0.01 0.03% N=0.006% Ca=0.005% and at least one of Cr=0.70% Ni=0.50% and Mo=0.30% the balance being iron and inevitable impurities. The process for manufacturing the steel plate comprises heating a continuous cast billet or a steel billet at 1150 1250°C then rolling in a recrystallization area and a non recrystallization area with the total reduction rate of =70% and a final rolling temperature of =860°C then cooling with water to Ms 145 to Ms 185 at Vmin50°C/s and then cooling with air to room temperature. The steel plate thus obtained with a thickness of 6 25 mm has a structure of martensite + retained austenite (5 10%) a hardness of = HB420 a yield strength of = 1000MPa an elongation of =18% and 40°C Akv of = 27J. The steel plate has excellent cold bending performance especially a significant TRIP effect during use of the steel plate significantly increasing the abrasion resistance and meeting the relatively high requirements for abrasion resistant steel plate in related industries.

No. of Pages : 20 No. of Claims : 20

(12) PATENT APPLICATION PUBLICATION
(19) INDIA
(22) Date of filing of Application :19/11/2013
(21) Application No.9286/CHENP/2013 A
(43) Publication Date : 07/11/2014

(54) Title of the invention : ELEVATOR EMERGENCY BOX

(51) International classification :B66B5/00,B66B11/02
(31) Priority Document No :20 2011 050 022.5
(32) Priority Date :02/05/2011
(33) Name of priority country :Germany
(86) International Application No :PCT/EP2012/057941
Filing Date :30/04/2012
(87) International Publication No :WO 2012/150228
(61) Patent of Addition to Application Number :NA
Filing Date :NA
(62) Divisional to Application Number :NA
Filing Date :NA

(71)**Name of Applicant :**
1)THEDE Stefan
Address of Applicant :Zimmerweg 1 60325 Frankfurt am Main Germany
(72)**Name of Inventor :**
1)THEDE Stefan

(57) Abstract :
The invention relates to an emergency box for use in an elevator containing aids for elevator emergencies wherein the emergency box is provided with an emergency connection device which can establish a connection to a central control station if the elevator is not functioning and has stalled wherein the emergency box can be opened only by means of a personal identification number which is provided by the central control station. The emergency box can be connected to further sensors and safety devices for an expanded functional scope. In particular said sensors and devices are smoke detectors and position contacts or oxygen masks fire extinguishing agent containers and airbags installed in the elevator cab.

No. of Pages : 17 No. of Claims : 12

(12) PATENT APPLICATION PUBLICATION
(19) INDIA
(22) Date of filing of Application :20/11/2013
(21) Application No.9287/CHENP/2013 A
(43) Publication Date : 07/11/2014

(54) Title of the invention : IONIC LIQUIDS FOR AGRICULTURAL RESIDUE REMOVAL

(51) International classification :C11B9/00
(31) Priority Document No :61/502011
(32) Priority Date :28/06/2011
(33) Name of priority country :U.S.A.
(86) International Application No :PCT/EP2012/062414
Filing Date :27/06/2012
(87) International Publication No :WO 2013/000935
(61) Patent of Addition to Application Number :NA
Filing Date :NA
(62) Divisional to Application Number :NA
Filing Date :NA

(71)**Name of Applicant :**
1)GIVAUDAN SA
Address of Applicant :Chemin de la Parfumerie 5 CH 1214 Vernier Switzerland
(72)**Name of Inventor :**
1)MCKEE Mary Amanda

(57) Abstract :
A method of reducing the proportion of agricultural residues (ARs) such as pesticides and herbicides present in an essential oil comprising the treatment of the oil with an ionic liquid that has at most limited solubility in the oil the ionic liquid having an anion and a cation chosen from the following table (1). The method is particularly effect with citrus oils especially orange oil and it can remove most ARs without removing essential components of the oil.

No. of Pages : 8 No. of Claims : 7

(12) PATENT APPLICATION PUBLICATION
(19) INDIA
(22) Date of filing of Application :20/11/2013
(21) Application No.9288/CHENP/2013 A
(43) Publication Date : 07/11/2014

(54) Title of the invention : METHOD OF MANUFACTURING BENZYLAMINE COMPOUND

(51) International classification	:C07C271/12,C07C233/31,C07D261/04
(31) Priority Document No	:2011125013
(32) Priority Date	:03/06/2011
(33) Name of priority country	:Japan
(86) International Application No	:PCT/JP2012/064488
Filing Date	:30/05/2012
(87) International Publication No	:WO 2012/165651
(61) Patent of Addition to Application Number	:NA
Filing Date	:NA
(62) Divisional to Application Number	:NA
Filing Date	:NA

(71)**Name of Applicant :**
1)SUMITOMO CHEMICAL COMPANY LIMITED
Address of Applicant :27 1 Shinkawa 2 chome Chuo ku Tokyo 1048260 Japan
(72)**Name of Inventor :**
1)KUMAMOTO Koji
2)UJIHARA Kazuya

(57) Abstract :
A new method for manufacturing a benzylamine compound represented in formula (7) (in the formula R represents a C1 C6 alkyl group optionally having one or more halogen atoms or a halogen atom R represents a halogen atom or a hydrogen atom and m represents any integer from 0 to 5 (if m is an integer from 2 to 5 the Rs may be different)) and an intermediate in said manufacturing method are provided.

No. of Pages : 35 No. of Claims : 9

(12) PATENT APPLICATION PUBLICATION
(19) INDIA
(22) Date of filing of Application :20/11/2013
(21) Application No.9289/CHENP/2013 A
(43) Publication Date : 07/11/2014

(54) Title of the invention : METHOD FOR PRODUCING N SUBSTITUTED LACTAM COMPOUND

(51) International classification :C07D209/52
(31) Priority Document No :2011125581
(32) Priority Date :03/06/2011
(33) Name of priority country :Japan
(86) International Application No :PCT/JP2012/064247
Filing Date :25/05/2012
(87) International Publication No :WO 2012/165606
(61) Patent of Addition to Application Number :NA
Filing Date :NA
(62) Divisional to Application Number :NA
Filing Date :NA

(71)**Name of Applicant :**
1)SUMITOMO CHEMICAL COMPANY LIMITED
Address of Applicant :27 1 Shinkawa 2 chome Chuo ku Tokyo 1048260 Japan
(72)**Name of Inventor :**
1)IWANAGA Yoshihiko
2)HIRATA Norihiko

(57) Abstract :
An N substituted lactam compound (3) can be produced with high yield by a method for producing an N substituted lactam compound (3) said method comprising a step of reacting a lactone compound (1) with an amine compound (2) represented by HN R in the presence of water. (In the formula R represents an optionally substituted methylene group; R represents an optionally substituted divalent alicyclic hydrocarbon group or an optionally substituted divalent heterocyclic group; R represents an optionally substituted methylene group; m represents 1 or 2; and n represents 0 1 2 or 3.)

No. of Pages : 32 No. of Claims : 9

(12) PATENT APPLICATION PUBLICATION
(19) INDIA
(22) Date of filing of Application :25/10/2013
(21) Application No.8624/CHENP/2013 A
(43) Publication Date : 07/11/2014

(54) Title of the invention : PATIENT INTERFACE DEVICE INCLUDING PRESSURE RELIEF FOR DEFORMABLE COMPONENTS

(51) International classification :A61M16/06
(31) Priority Document No :61/476452
(32) Priority Date :18/04/2011
(33) Name of priority country :U.S.A.
(86) International Application No :PCT/IB2012/051797
Filing Date :12/04/2012
(87) International Publication No :WO 2012/143828
(61) Patent of Addition to Application Number :NA
Filing Date :NA
(62) Divisional to Application Number :NA
Filing Date :NA

(71)**Name of Applicant :**
1)KONINKLIJKE PHILIPS N.V.
Address of Applicant :High Tech Campus 5 NL 5656 AE Eindhoven Netherlands
(72)**Name of Inventor :**
1)ANDREWS Derrick Blake
2)HAIBACH Richard Thomas
3)STARTARE Anthony Vincent

(57) Abstract :
A patient interface device includes a sealing cushion structured to communicate a flow of breathing gas within an airway of a patient a rigid or semi rigid support member coupled to the sealing cushion the support member including an inner surface an outer surface and at least one orifice extending therethrough and a cushion member pro¬ vided on the inner surface of the support member and structured to engage a portion of the head or face of the patient when the patient interface device is donned by the patient the cushion member being made of a deformable material and overlapping the orifice such that a portion of the cushion member will flow at least partially through the orifice when pressure is applied to the cushion member.

No. of Pages : 22 No. of Claims : 15

(12) PATENT APPLICATION PUBLICATION
(19) INDIA
(22) Date of filing of Application :22/11/2013
(21) Application No.9382/CHENP/2013 A
(43) Publication Date : 07/11/2014

(54) Title of the invention : LOW BACK PRESSURE ACCUMULATION SYSTEM

(51) International classification :B65G17/24
(31) Priority Document No :61/481543
(32) Priority Date :02/05/2011
(33) Name of priority country :U.S.A.
(86) International Application No :PCT/US2012/035513
Filing Date :27/04/2012
(87) International Publication No :WO 2012/151127
(61) Patent of Addition to Application Number :NA
Filing Date :NA
(62) Divisional to Application Number :NA
Filing Date :NA

(71)**Name of Applicant :**
1)LAITRAM L.L.C.
Address of Applicant :Legal Department 200 Laitram Lane Harahan Louisiana 70123 U.S.A.
(72)**Name of Inventor :**
1)FOURNEY Matthew L.

(57) Abstract :
A belt conveyor having upper article supporting belt rollers that are rotated rearward by rotating lower belt rollers only when the articles are slowed or stopped from advancing with the belt. As the belt advances in a direction of travel the lower rollers rotate by contact with a bearing surface underlying the belt. The upper rollers have axles whose ends are retained in slots that slope downward in the belt s direction of travel. The slots provide the upper rollers a range of positions between a forward position out of contact with the rotating lower roller and a rearward position contacting the lower roller which rotates the upper roller rearward relieving back line pressure on accumulated articles.

No. of Pages : 11 No. of Claims : 13

(12) PATENT APPLICATION PUBLICATION
(19) INDIA
(22) Date of filing of Application :22/11/2013
(21) Application No.9383/CHENP/2013 A
(43) Publication Date : 07/11/2014

(54) Title of the invention : DEVICES AND METHODS FOR PASSIVATING A FLEXIBLE SUBSTRATE IN A COATING PROCESS

(51) International classification :C23C14/58,C23C14/56,C23C14/20
(31) Priority Document No :NA
(32) Priority Date :NA
(33) Name of priority country :NA
(86) International Application No :PCT/EP2011/056877
Filing Date :29/04/2011
(87) International Publication No :WO 2012/146310
(61) Patent of Addition to Application Number :NA
Filing Date :NA
(62) Divisional to Application Number :NA
Filing Date :NA

(71)**Name of Applicant :**
1)APPLIED MATERIALS INC.
Address of Applicant :3050 Bowers Avenue Santa Clara CA 95054 U.S.A.
(72)**Name of Inventor :**
1)HOFFMANN Gerd
2)WOLFF Alexander

(57) Abstract :
An apparatus for passivating a coating of a flexible substrate includes a coating chamber for coating the flexible substrate a chamber separation element the chamber separation element being arranged for separating the coating chamber from a further chamber a coating drum the coating drum and the chamber separation element forming a gap and a gas inlet the gas inlet being arranged within the chamber separation element for supplying oxygen into the gap.

No. of Pages : 19 No. of Claims : 15

(12) PATENT APPLICATION PUBLICATION
(19) INDIA
(22) Date of filing of Application :22/11/2013
(21) Application No.9384/CHENP/2013 A
(43) Publication Date : 07/11/2014

(54) Title of the invention : A PROCESS TO MANUFACTURE THICK LAYERS OF RADIATION CURED ADHESIVES

(51) International classification :C08G18/12,C08G18/66,C08G18/67
(31) Priority Document No :11167829.8
(32) Priority Date :27/05/2011
(33) Name of priority country:EPO
(86) International Application No :PCT/EP2012/057135
Filing Date :19/04/2012
(87) International Publication No :WO 2012/163593
(61) Patent of Addition to Application Number :NA
Filing Date :NA
(62) Divisional to Application Number :NA
Filing Date :NA

(71)**Name of Applicant :**
1)HENKEL AG & CO. KGAA
Address of Applicant :Henkelstr. 67 40589 D¼sseldorf Germany
(72)**Name of Inventor :**
1)DAVIS Riju

(57) Abstract :
The invention relates to a process to manufacture an adhesive layer in an easy to handle process whereby the adhesive is applied in a molten state to a substrate in an amount to form a layer of 150 to 5000 µm and the adhesive is cured by UV radiation whereby the adhesive comprises a polyurethane bearing at least one unsaturated curable group in the chain and the radiation source is preferably an UV LED.

No. of Pages : 19 No. of Claims : 14

(12) PATENT APPLICATION PUBLICATION
(19) INDIA
(22) Date of filing of Application :27/11/2013
(21) Application No.9502/CHENP/2013 A
(43) Publication Date : 07/11/2014

(54) Title of the invention : COMMUNICATION DEVICES FOR MULTIPLE GROUP COMMUNICATIONS

(51) International classification :H04B7/06,H04B7/04
(31) Priority Document No :61/494626
(32) Priority Date :08/06/2011
(33) Name of priority country :U.S.A.
(86) International Application No :PCT/US2011/061645
Filing Date :21/11/2011
(87) International Publication No :WO 2012/170067
(61) Patent of Addition to Application Number :NA
Filing Date :NA
(62) Divisional to Application Number :NA
Filing Date :NA

(71)**Name of Applicant :**
1)QUALCOMM INCORPORATED
Address of Applicant :ATTN: International IP Administration 5775 Morehouse Drive San Diego California 92121 U.S.A.
(72)**Name of Inventor :**
1)VAN NEE Didier Johannes Richard
2)VAN ZELST Albert
3)VERMANI Sameer
4)JONES Vincent Knowles IV
5)MERLIN Simone

(57) Abstract :
A base station for communicating with multiple groups of wireless communication devices is described. The base station includes a processor and executable instructions stored in memory that is in electronic communication with the processor. The base station determines a number of wireless communication devices. The base station also splits the number of wireless communication devices into groups. The base station further determines a precoding matrix for each group. The base station additionally transmits a beamformed signal to each group using the precoding matrix for each group.

No. of Pages : 92 No. of Claims : 50

(12) PATENT APPLICATION PUBLICATION
(19) INDIA
(22) Date of filing of Application :28/11/2013
(21) Application No.9563/CHENP/2013 A
(43) Publication Date : 07/11/2014

(54) Title of the invention : HALOGEN FREE FLAME RETARDANT INSULATED ELECTRICAL WIRE

(51) International classification :H01B7/295,C08K5/521,C08L23/06
(31) Priority Document No :2012021401
(32) Priority Date :03/02/2012
(33) Name of priority country :Japan
(86) International Application No :PCT/JP2012/083389
Filing Date :25/12/2012
(87) International Publication No :WO 2013/114765
(61) Patent of Addition to Application Number :NA
Filing Date :NA
(62) Divisional to Application Number :NA
Filing Date :NA

(71)**Name of Applicant :**
1)SUMITOMO ELECTRIC INDUSTRIESLTD.
Address of Applicant :5 33 Kitahama 4 chome Chuo ku Osaka shi Osaka 5410041 Japan
(72)**Name of Inventor :**
1)MAYAMA Yuhei
2)NISHIKAWA Shinya
3)ISHIKAWA Masayuki
4)TOZAWA Masahiro

(57) Abstract :
Provided is a halogen free flame retardant insulated electrical wire which can achieve both abrasion resistance and coating film flexibility (extensibility) and which satisfies the characteristics required by insulated electrical wires used in vehicles such as oil resistance and flame retardancy. The halogen free flame retardant insulated electrical wire has a conductor and an insulating layer that covers the conductor. The insulating layer comprises a crosslinked resin composition that contains 6 25 parts by mass of a phosphate ester and 1 10 parts by mass of a polyfunctional monomer relative to 100 parts by mass of a resin component that is a polymer alloy which comprises 40 65 parts by mass of a high density polyethylene having a melt flow rate of 0.60 or lower 25 30 parts by mass of a poly(phenylene ether) based resin and 10 30 parts by mass of a styrene based elastomer and which is obtained by finely dispersing the poly(phenylene ether) based resin and the styrene based elastomer in the high density polyethylene.

No. of Pages : 21 No. of Claims : 5

(12) PATENT APPLICATION PUBLICATION
(19) INDIA
(22) Date of filing of Application :28/11/2013
(21) Application No.9565/CHENP/2013 A
(43) Publication Date : 07/11/2014

(54) Title of the invention : GAMBLING AND/OR GAMING APPARATUS

(51) International classification :G07F17/32,A63F13/00
(31) Priority Document No :NA
(32) Priority Date :NA
(33) Name of priority country :NA
(86) International Application No :PCT/EP2011/002202
Filing Date :03/05/2011
(87) International Publication No :WO 2012/149943
(61) Patent of Addition to Application Number :NA
Filing Date :NA
(62) Divisional to Application Number :NA
Filing Date :NA

(71)**Name of Applicant :**
1)NOVOMATIC AG
Address of Applicant :Wiener Strasse 158 A 2352 Gumpoldskirchen Austria
(72)**Name of Inventor :**
1)KAIBLINGER Harald
2)SCHR–TTER Florian

(57) Abstract :
The present invention relates to a gambling and/or gaming apparatus comprising an input apparatus for inputting a piece of stake and/or playing tip information in the form of a number and/or a combination of numbers and/or a number matrix an outcome ascertainment apparatus for ascertaining a winning number and/or a winning number combination and/or a winning number matrix an indicator apparatus for indicating the ascertained winning number and/or the ascertained winning number combination and/or the ascertained winning number matrix and a win ascertainment apparatus for ascertaining a gambling or gaming win from a comparison of the ascertained winning number and/or the ascertained winning number combination and/or the ascertained winning number matrix with the input stake and/or playing tip information. According to the invention the outcome ascertainment apparatus of the gambling and/or gaming apparatus which is used to ascertain the winning number winning number combination and/or winning number matrix comprises a monitoring apparatus for monitoring at least one game of skill/skilled sport installation on which a game of skill/skilled sport which provides at least one game outcome can be executed by at least one participant wherein the monitoring apparatus comprises game outcome determination means for determining the game outcome and a determination device for determining the winning number and/or winning number combination and/or winning number matrix from the determined game outcome.

No. of Pages : 35 No. of Claims : 22

(12) PATENT APPLICATION PUBLICATION
(19) INDIA
(22) Date of filing of Application :15/11/2013
(21) Application No.9175/CHENP/2013 A
(43) Publication Date : 07/11/2014

(54) Title of the invention : METHOD APPARATUS AND COMPUTER PROGRAM PRODUCT FOR CABLE DETECTION AND POWER NEGOTIATION

(51) International classification :G06F13/20,G06F1/26
(31) Priority Document No :13/110120
(32) Priority Date :18/05/2011
(33) Name of priority country :U.S.A.
(86) International Application No :PCT/FI2012/050309
Filing Date :29/03/2012
(87) International Publication No :WO 2012/156575
(61) Patent of Addition to Application Number :NA
Filing Date :NA
(62) Divisional to Application Number :NA
Filing Date :NA

(71)**Name of Applicant :**
1)NOKIA CORPORATION
Address of Applicant :Keilalahdentie 4 FI 02150 Espoo Finland
(72)**Name of Inventor :**
1)PETRIE Richard
2)CARLSEN Sten

(57) Abstract :
Method apparatus and computer program product embodiments of the invention are disclosed for negotiation protocols for power delivery from a first device to a connected second device. In example embodiments of the invention a method comprises: determining whether a connector includes a cable indication that indicates its cable is capable of conducting an elevated power level above a level of a legacy cable (252); transmitting an offer to a device connected by the cable to provide one or more supported power capabilities above the level of a legacy cable if the cable indication is determined to indicate that the cable is capable of conducting an elevated power level above the level of a legacy cable (256); and transmitting an offer to a device connected by the cable to provide the power level of a legacy cable if the cable indication is determined to indicate that the cable is not capable of conducting an elevated power level above the level of a legacy cable (258).

No. of Pages : 74 No. of Claims : 24

(12) PATENT APPLICATION PUBLICATION
(19) INDIA
(22) Date of filing of Application :15/11/2013
(21) Application No.9178/CHENP/2013 A
(43) Publication Date : 07/11/2014

(54) Title of the invention : METHOD AND COMPOSITION FOR ENHANCED HYDROCARBON RECOVERY

(51) International classification :C09K8/584
(31) Priority Document No :11163096.8
(32) Priority Date :20/04/2011
(33) Name of priority country :EPO
(86) International Application No :PCT/EP2012/057148
Filing Date :19/04/2012
(87) International Publication No :WO 2012/143433
(61) Patent of Addition to Application Number :NA
Filing Date :NA
(62) Divisional to Application Number :NA
Filing Date :NA

(71)**Name of Applicant :**
1)SHELL INTERNATIONALE RESEARCH MAATSCHAPPIJ B.V.
Address of Applicant :Carel van Bylandtlaan 30 NL 2596 HR The Hague Netherlands
(72)**Name of Inventor :**
1)BARNES Julian Richard
2)ELLISON Robert Hardy
3)FABER Marinus Johannes
4)GROEN Khrystyna
5)MOENE Robert
6)ON Quoc An

(57) Abstract :
The invention relates to a method of treating a hydrocarbon containing formation comprising: (a) providing a composition to at least a portion of the hydrocarbon containing formation wherein the composition comprises an anionic surfactant based on an alkoxylated primary alcohol having a branched aliphatic group which group has an average carbon number of from 9 to 15 and an average number of branches of from 0.5 to 2.5 and having an average of at least 0.5 mole of alkylene oxide groups per mole of primary alcohol; and (b) allowing the composition to interact with hydrocarbons in the hydrocarbon containing formation. Further the invention relates to the hydrocarbon recovery composition that is used in said method.

No. of Pages : 80 No. of Claims : 20

(12) PATENT APPLICATION PUBLICATION
(19) INDIA
(22) Date of filing of Application :28/11/2013
(21) Application No.9530/CHENP/2013 A
(43) Publication Date : 07/11/2014

(54) Title of the invention : LED BASED LIGHTING FIXTURE WITH TEXTURED LENS

(51) International classification :F21V13/04,F21V13/10,F21V3/04
(31) Priority Document No :61/491676
(32) Priority Date :31/05/2011
(33) Name of priority country :U.S.A.
(86) International Application No :PCT/IB2012/052706
Filing Date :30/05/2012
(87) International Publication No :WO 2012/164500
(61) Patent of Addition to Application Number :NA
Filing Date :NA
(62) Divisional to Application Number :NA
Filing Date :NA

(71)**Name of Applicant :**
1)KONINKLIJKE PHILIPS N.V.
Address of Applicant :High Tech Campus 5 NL 5656 AE Eindhoven Netherlands
(72)**Name of Inventor :**
1)ROTH Eric Anthony
2)LACROIX Luc Guy Louis

(57) Abstract :
Methods and apparatus related to a textured lens(30 130). The textured lens includes a textured portion(40 140)having plurality of unique textures. The lens may be utilized in a LED based lighting fixture (10 110) to for example reduce the presence of color banding and/or color shadows present in the light output of the lighting fixture. The textured portion may extend across all or portions of the lens surface.

No. of Pages : 30 No. of Claims : 20

(12) PATENT APPLICATION PUBLICATION
(19) INDIA
(22) Date of filing of Application :28/11/2013
(21) Application No.9534/CHENP/2013 A
(43) Publication Date : 07/11/2014

(54) Title of the invention : APPARATUS AND METHOD FOR THE DETECTION OF THE BODY POSITION WHILE SLEEPING

(51) International classification :G08B21/06,G06K9/00,A61B5/11
(31) Priority Document No :11305656.8
(32) Priority Date :30/05/2011
(33) Name of priority country :EPO
(86) International Application No :PCT/IB2012/052671
Filing Date :29/05/2012
(87) International Publication No :WO 2012/164482
(61) Patent of Addition to Application Number :NA
Filing Date :NA
(62) Divisional to Application Number :NA
Filing Date :NA

(71)**Name of Applicant :**
1)KONINKLIJKE PHILIPS N.V.
Address of Applicant :High Tech Campus 5 NL 5656 AE Eindhoven Netherlands
(72)**Name of Inventor :**
1)HEINRICH Adrienne
2)VAN VUGT Henriette Christine
3)DERKX Rene Martinus Maria
4)GARCIA MOLINA Gary Nelson
5)DU Jia

(57) Abstract :
The invention relates to a method and an apparatus for the detection of the body position especially while sleeping. More particularly the invention relates to how the main body positions during sleep can be derived from the distribution of the reflection of a projected IR light from a subject s body under a blanket. Additionally the breathing signals can be analyzed to determine the body posture.

No. of Pages : 27 No. of Claims : 15

(12) PATENT APPLICATION PUBLICATION
(19) INDIA
(22) Date of filing of Application :28/11/2013
(21) Application No.9535/CHENP/2013 A
(43) Publication Date : 07/11/2014

(54) Title of the invention : METHOD AND APPARATUS FOR MONITORING MOVEMENT AND BREATHING OF MULTIPLE SUBJECTS IN A COMMON BED

(51) International classification :A61B5/113
(31) Priority Document No :11305655.0
(32) Priority Date :30/05/2011
(33) Name of priority country :EPO
(86) International Application No :PCT/IB2012/052605
Filing Date :24/05/2012
(87) International Publication No :WO 2012/164453
(61) Patent of Addition to Application Number :NA
Filing Date :NA
(62) Divisional to Application Number :NA
Filing Date :NA

(71)**Name of Applicant :**
1)KONINKLIJKE PHILIPS N.V.
Address of Applicant :High Tech Campus 5 NL 5656 AE Eindhoven Netherlands
(72)**Name of Inventor :**
1)VAN VUGT Henriette Christine
2)HEINRICH Adrienne

(57) Abstract :
The invention relates to methods and apparatus for monitoring movement and breathing of two or more subjects occupying common bedding. Particularly the invention relates to a method for monitoring movement of subjects located in a common bedding the method comprising the steps of: imaging the bedding by an optical sensor; performing a motion estimation by producing motion vectors indicating the local displacement of corresponding image blocks between consecutive images or images that are several frames apart received from said optical sensor; calculating motion clusters by measuring spatial and temporal correlations of the motion vectors; segmenting the calculated motion clusters by assignment of each motion cluster to a corresponding subject wherein the assignment of the motion clusters to the corresponding subject is based on the spatial and/or temporal similarity of the motion clusters among each other and on previous segmentation results.

No. of Pages : 23 No. of Claims : 13

(12) PATENT APPLICATION PUBLICATION
(19) INDIA
(22) Date of filing of Application :28/11/2013
(21) Application No.9536/CHENP/2013 A
(43) Publication Date : 07/11/2014

(54) Title of the invention : HAIR TREATMENT DEVICE HAVING A LIGHT BASED HAIR DETECTOR

(51) International classification :G01N21/21,G01N21/23
(31) Priority Document No :11168115.1
(32) Priority Date :30/05/2011
(33) Name of priority country :EPO
(86) International Application No :PCT/IB2012/052573
Filing Date :23/05/2012
(87) International Publication No :WO 2012/164441
(61) Patent of Addition to Application Number :NA
Filing Date :NA
(62) Divisional to Application Number :NA
Filing Date :NA

(71)**Name of Applicant :**
1)KONINKLIJKE PHILIPS N.V.
Address of Applicant :High Tech Campus 5 NL 5656 AE Eindhoven Netherlands
(72)**Name of Inventor :**
1)HEINRICH Adrienne
2)VAN HEESCH Franciscus Hendrikus
3)VARGHESE Babu
4)UZUNBAJAKAVA Natallia Eduardauna

(57) Abstract :
A hair treatment device is provided comprising alight based detector (10) for detecting a hair (11) near a skin (12) surface. The light based detector comprises a light source (13) for emitting optical radiation of at least a first wavelength and with an incident polarization towards the skin surface. A light sensor (14a 14b) is provided for detecting light reflected at the skin surface. The light sensor (14a 14b) is capable of separately detecting the reflected light with the incident polarization and with a different polarization and for providing a PP value representing the detected light with the incident polarization and a CP value representing the detected light with the different polarization. A processor (15) is operative to scale the CP value and the PP value to respective dynamic ranges to determine a Minimum Intensity Projection (MIP) value by selecting the lowest value of the scaled CP value and the scaled PP value and to discriminate between the skin surface (12) and the hair (11) based on the minimum intensity projection.

No. of Pages : 27 No. of Claims : 14

(12) PATENT APPLICATION PUBLICATION
(19) INDIA
(22) Date of filing of Application :26/11/2013
(21) Application No.9454/CHENP/2013 A
(43) Publication Date : 07/11/2014

(54) Title of the invention : DETECTING METHOD OF LIFE ACTIVITY CONTROLLING METHOD OF LIFE ACTIVITY AND TRANSMISSION METHOD OF INFORMATION CONCERNING LIFE ACTIVITY

(51) International classification :G01N21/35,A61B5/05,A61B10/00
(31) Priority Document No :2011248115
(32) Priority Date :11/11/2011
(33) Name of priority country :Japan
(86) International Application No :PCT/JP2012/079874
Filing Date :09/11/2012
(87) International Publication No :WO 2013/069820
(61) Patent of Addition to Application Number :NA
Filing Date :NA
(62) Divisional to Application Number :NA
Filing Date :NA

(71)**Name of Applicant :**
1)ANDO Hideo
Address of Applicant :890 1 Arai Hino shi Tokyo 1910022 Japan
(72)**Name of Inventor :**
1)ANDO Hideo

(57) Abstract :
According to a measuring method or a control method of life activity a life object is illuminated with an electromagnetic wave including a wavelength in a designated waveband and a characteristic in a local area of the life object is detected or a life activity thereof is controlled. This local area is an area constituted by one or more cells. The designated waveband is defined based on any one of the following phenomena: [1] transition energy between a ground state of a vibration mode newly occurring between atoms in a constituent molecule of a cell membrane and a plurality of excited states; [2] transition energy between vibration modes occurring between specific atoms in a molecule corresponding to the activity of the life object or the change thereof; and [3] a specific chemical shift value in Nuclear Magnetic Resonance.

No. of Pages : 164 No. of Claims : 5

(12) PATENT APPLICATION PUBLICATION
(19) INDIA
(22) Date of filing of Application :28/11/2013
(21) Application No.9526/CHENP/2013 A
(43) Publication Date : 07/11/2014

(54) Title of the invention : METHOD FOR PRODUCING CYCLOPENTANONE COMPOUND AND INTERMEDIATE COMPOUND

(51) International classification :C07C69/757,C07C45/67,C07C49/697
(31) Priority Document No :2011127764
(32) Priority Date :07/06/2011
(33) Name of priority country :Japan
(86) International Application No :PCT/JP2012/064406
Filing Date :04/06/2012
(87) International Publication No :WO 2012/169468
(61) Patent of Addition to Application Number :NA
Filing Date :NA
(62) Divisional to Application Number :NA
Filing Date :NA

(71)**Name of Applicant :**
1)KUREHA CORPORATION
Address of Applicant :3 3 2 Nihonbashi Hamacho Chuo ku Tokyo 1038552 Japan
(72)**Name of Inventor :**
1)KANNO Hisashi

(57) Abstract :
Provided is a novel method for producing a cyclopentanone compound. The present invention is a method for producing a cyclopentanone compound represented by formula (I) comprising the steps of: reacting a compound represented by formula (III) or an intermediate compound produced from the compound with a catalyst or a halogenating agent thereby substituting a group represented by Y in the compound or the intermediate compound by a hydrogen atom; and reducing the compound represented by formula (III) or the intermediate compound produced from the compound thereby substituting each of groups or atoms represented by Z and Z in the compound or the intermediate compound by a hydrogen atom.

No. of Pages : 82 No. of Claims : 13

(12) PATENT APPLICATION PUBLICATION
(19) INDIA
(22) Date of filing of Application :28/11/2013
(21) Application No.9527/CHENP/2013 A
(43) Publication Date : 07/11/2014

(54) Title of the invention : METHODS AND APPARATUS FOR DEPLOYMENT AND CONTROL OF BASE STATIONS

(51) International classification :H04W52/24
(31) Priority Document No :61/499036
(32) Priority Date :20/06/2011
(33) Name of priority country :U.S.A.
(86) International Application No :PCT/US2012/043400
Filing Date :20/06/2012
(87) International Publication No :WO 2012/177800
(61) Patent of Addition to Application Number :NA
Filing Date :NA
(62) Divisional to Application Number :NA
Filing Date :NA

(71)**Name of Applicant :**
1)QUALCOMM Incorporated
Address of Applicant :Attn: International IP Administration 5775 Morehouse Drive San Diego California 92121 U.S.A.
(72)**Name of Inventor :**
1)KHAITAN Varun
2)YAVUZ Mehmet

(57) Abstract :
Methods and apparatuses are provided for performing power control for a femto node deployed in a wireless network that include adjusting a transmission parameter of the femto node based on one or more signal energy parameters such as a received signal strength indicator (RSSI). A comparison between the signal energy a noise floor and a threshold signal energy can be determined and a transmission parameter of the femto node is accordingly adjusted based on the comparison.

No. of Pages : 52 No. of Claims : 52

(12) PATENT APPLICATION PUBLICATION
(19) INDIA
(22) Date of filing of Application :19/11/2013
(21) Application No.9271/CHENP/2013 A
(43) Publication Date : 07/11/2014

(54) Title of the invention : SCREENING DEVICE FOR SCREENING PLANT SPECIMENS

(51) International classification :A01H1/04,A01G1/00,G01N21/84
(31) Priority Document No :61/501297
(32) Priority Date :27/06/2011
(33) Name of priority country :U.S.A.
(86) International Application No :PCT/IB2012/053194
Filing Date :25/06/2012
(87) International Publication No :WO 2013/001436
(61) Patent of Addition to Application Number :NA
Filing Date :NA
(62) Divisional to Application Number :NA
Filing Date :NA

(71)**Name of Applicant :**
1)BASF Plant Science Company GmbH
Address of Applicant :67056 Ludwigshafen Germany
(72)**Name of Inventor :**
1)LEYNS Frederik
2)VANDAELE Cedrick
3)LEJEUNE Pierre
4)BAERT Jeroen
5)FIORANI Fabio

(57) Abstract :
A screening device (110) for screening at least one plant specimen (112) in a plurality of plant specimens (114) is disclosed. The screening device (110) comprises a detector (116) adapted for acquiring spatially resolved images (117). The screening device (110) further comprises at least one selection device (118) adapted for selecting a single plant specimen (120) or a group of plant specimens (122) from the plurality of plant specimens (114) for imaging by the detector (116). The selection device (118) comprises a deflection device (124) adapted for deflecting electromagnetic waves propagating between the plant specimens (112) and the detector (116).

No. of Pages : 57 No. of Claims : 14

(12) PATENT APPLICATION PUBLICATION
(19) INDIA
(22) Date of filing of Application :20/11/2013
(21) Application No.9306/CHENP/2013 A
(43) Publication Date : 07/11/2014

(54) Title of the invention : SINGLE BATH AUTODEPOSITION COATING FOR COMBINATION METAL SUBSTRATES AND METHODS THEREFOR

(51) International classification :C08K5/32,C08L101/00,C08L33/04
(31) Priority Document No :61/498285
(32) Priority Date :17/06/2011
(33) Name of priority country :U.S.A.
(86) International Application No :PCT/US2012/042739
Filing Date :15/06/2012
(87) International Publication No :WO 2012/174424
(61) Patent of Addition to Application Number :NA
Filing Date :NA
(62) Divisional to Application Number :NA
Filing Date :NA

(71)**Name of Applicant :**
1)HENKEL AG & CO. KGAA
Address of Applicant :Henkelstrasse 67 40589 Duesseldorf Germany
(72)**Name of Inventor :**
1)KUMAR Girdhari
2)QIU Xueting
3)AHMED Bashir M.
4)ABU SHANAB Omar L.
5)SEKHARAN Manesh Nadupparambil
6)MARVIN Brian

(57) Abstract :
This invention relates to an autodeposition bath composition comprising a nitrogen containing compound said bath being suitable for generating a uniform autodeposition coating on two or more of ferrous aluminum magnesium and zinciferous multi metal substrate surfaces treated either sequentially or simultaneously. The invention also provides autodeposition concentrate compositions for use in the bath methods of making and using the concentrate and bath as well as metal articles comprising an autodeposition coating according to the invention.

No. of Pages : 42 No. of Claims : 16

(12) PATENT APPLICATION PUBLICATION
(19) INDIA
(22) Date of filing of Application :21/11/2013
(21) Application No.9371/CHENP/2013 A
(43) Publication Date : 07/11/2014

(54) Title of the invention : PERSONALIZED RF COIL ARRAY FOR MR IMAGING GUIDED INTERVENTIONS

(51) International classification :G01R33/34
(31) Priority Document No :11166210.2
(32) Priority Date :16/05/2011
(33) Name of priority country :EPO
(86) International Application No :PCT/IB2012/052309
Filing Date :09/05/2012
(87) International Publication No :WO 2012/156866
(61) Patent of Addition to Application Number :NA
Filing Date :NA
(62) Divisional to Application Number :NA
Filing Date :NA

(71)**Name of Applicant :**
1)KONINKLIJKE PHILIPS N.V.
Address of Applicant :High Tech Campus 5 NL 5656 AE Eindhoven Netherlands
(72)**Name of Inventor :**
1)MARTENS Hubert Ccile Fran§ois
2)MOORE Elizabeth Anne
3)POSSANZINI Cecilia
4)NIJENHUIS Marco Hubertus Johannes
5)PARDOEL Michel Gerardus
6)BOS Clemens
7)ELEVELT Aaldert Jan
8)WIRTZ Daniel

(57) Abstract :
The invention relates to a method of manufacturing a personalized RF coil array for MR imaging guided interventions. The method comprises the steps of: acquiring diagnostic image data reflecting the anatomy of a portion of a patient s body (10); planning an intervention on the basis of the diagnostic image data wherein a field of the intervention within the patient s body (10) portion is determined; arranging one or more RF antennae (11 12 13) on a substrate (19) which is adapted to the patient s anatomy in such a manner that the signal to noise ratio of MR signal acquisition via the one or more RF antennae (11 12 13) from the field of the intervention is optimized. Moreover the invention relates to a computer program and to a computer workstation.

No. of Pages : 15 No. of Claims : 12

(12) PATENT APPLICATION PUBLICATION
(19) INDIA
(22) Date of filing of Application :21/11/2013
(21) Application No.9372/CHENP/2013 A
(43) Publication Date : 07/11/2014

(54) Title of the invention : FASTENING ELEMENT FOR CLAMPING SHEETS

(51) International classification :F16B5/00,F16B5/06,F16B5/12
(31) Priority Document No :11165963.7
(32) Priority Date :13/05/2011
(33) Name of priority country :EPO
(86) International Application No :PCT/IB2012/052322
Filing Date :10/05/2012
(87) International Publication No :WO 2012/156870
(61) Patent of Addition to Application Number :NA
Filing Date :NA
(62) Divisional to Application Number :NA
Filing Date :NA

(71)**Name of Applicant :**
1)KONINKLIJKE PHILIPS N.V.
Address of Applicant :High Tech Campus 5 NL 5656 AE Eindhoven Netherlands
(72)**Name of Inventor :**
1)VAN GOMPEL Waltherus Emericus Johannes
2)DE KONING Niels

(57) Abstract :
A fastening element (100) for clamping together a stack of sheets (410) (411) comprising at least two sheets. The fastening element comprises at least one base portion (101) extending along the stack of sheets and perpendicular to the planes of the sheets. Further the fastening element comprises a flange portion (102) which extends substantially perpendicular from the base portion and a pointed element (103) which extends in an acute angle with respect to the base portion. The flexible fastening element generates a spring force which clamps the sheets of the stack of sheets together between the at least one flange portion and the at least one pointed element. In this grip position the at least one pointed element grips at least one edge of a bottom sheet of the stack of sheets and a top sheet of the stack of sheets is allowed to move in relation to the at least one flange portion.

No. of Pages : 23 No. of Claims : 14

(12) PATENT APPLICATION PUBLICATION
(19) INDIA
(22) Date of filing of Application :21/11/2013
(21) Application No.9373/CHENP/2013 A
(43) Publication Date : 07/11/2014

(54) Title of the invention : PATIENT INTERFACE DEVICE INCLUDING AN ADJUSTABLE FOREHEAD SUPPORT HAVING A VERTICAL WHEEL DRIVE MECHANISM

(51) International classification :A61M16/06
(31) Priority Document No :61/485798
(32) Priority Date :13/05/2011
(33) Name of priority country :U.S.A.
(86) International Application No :PCT/IB2012/052310
Filing Date :09/05/2012
(87) International Publication No :WO 2012/156867
(61) Patent of Addition to Application Number :NA
Filing Date :NA
(62) Divisional to Application Number :NA
Filing Date :NA

(71)**Name of Applicant :**
1)KONINKLIJKE PHILIPS N.V.
Address of Applicant :High Tech Campus 5 NL 5656 AE Eindhoven Netherlands
(72)**Name of Inventor :**
1)ROTHERMEL Justin Edward
2)ZEDIKER Chad
3)HAIBACH Richard Thomas
4)HIEBER IV Robert Earl
5)STEGMAN Steven Charles
6)BEITZEL Karl Herbert
7)BELTON Jason Anthony

(57) Abstract :
A patient interface device (10) includes a patient sealing assembly (60) including a cushion (70) and a frame member (80) coupled to the cushion and an adjustable forehead support assembly (200) provided at the distal end (120) of the frame member. The adjustable forehead support assembly includes an adjustment mechanism (202) coupled to a forehead cushion (204) wherein the adjustment mechanism includes a forehead cushion support member (212) having a base portion (216) coupled to the forehead cushion and an vertical/upright rotatable wheel member (214). Rotation of the wheel member causes movement of the frame member and the cushion relative to the forehead cushion.

No. of Pages : 20 No. of Claims : 16

(12) PATENT APPLICATION PUBLICATION
(19) INDIA
(22) Date of filing of Application :21/11/2013

(21) Application No.9374/CHENP/2013 A
(43) Publication Date : 07/11/2014

(54) Title of the invention : GENERATING A SLICING SCHEME FOR SLICING A SPECIMEN

(51) International classification :G01N1/06,A61B10/00,G06F9/30
(31) Priority Document No :11166080.9
(32) Priority Date :13/05/2011
(33) Name of priority country :EPO
(86) International Application No :PCT/IB2012/052276
Filing Date :08/05/2012
(87) International Publication No :WO 2012/156862
(61) Patent of Addition to Application Number :NA
Filing Date :NA
(62) Divisional to Application Number :NA
Filing Date :NA

(71)**Name of Applicant :**
1)KONINKLIJKE PHILIPS N.V.
Address of Applicant :High Tech Campus 5 NL 5656 AE Eindhoven Netherlands
(72)**Name of Inventor :**
1)MEETZ Kirsten
2)BERGTHOLDT Martin
3)BUELOW Thomas
4)CARLSEN Ingwer Curt
5)WIEMKER Rafael

(57) Abstract :
A system for generating a slicing scheme for slicing a specimen is disclosed. A parameter unit (1) is arranged for determining at least one parameter of a lesion in a specimen based on an image dataset (14) representing at least part of the specimen. A slicing scheme unit (2) is arranged for determining a slicing scheme (15) for pathologic examination of the specimen based on the at least one parameter. A specimen preparation unit (3) is arranged for determining a slicing preparation protocol based on the image dataset wherein the slicing preparation protocol comprises a representation of preparation steps relating to the specimen. A segmentation unit (5) is arranged for segmenting the lesion in the image dataset (14) wherein the parameter unit (1) is arranged for determining the at least one parameter based on the segmented lesion.

No. of Pages : 18 No. of Claims : 15

(12) PATENT APPLICATION PUBLICATION
(19) INDIA
(22) Date of filing of Application :28/11/2013
(21) Application No.9544/CHENP/2013 A
(43) Publication Date : 07/11/2014

(54) Title of the invention : METHOD FOR DETERMINING A PLASMA VOLUME VARIATION AND DEVICES FOR IMPLEMENTING THE METHOD

(51) International classification	:G01N33/72,G01N33/49,A61B5/1455
(31) Priority Document No	:11305764.0
(32) Priority Date	:17/06/2011
(33) Name of priority country	:EPO
(86) International Application No	:PCT/EP2012/061532
Filing Date	:15/06/2012
(87) International Publication No	:WO 2012/172097
(61) Patent of Addition to Application Number	:NA
Filing Date	:NA
(62) Divisional to Application Number	:NA
Filing Date	:NA

(71)**Name of Applicant :**
1)INSERM (Institut National de la Sant et de la Recherche Mdicale)
Address of Applicant :101 rue de Tolbiac F 75013 Paris France
2)UNIVERSITE DE LORRAINE
3)CENTRE HOSPITALIER UNIVERSITAIRE DE NANCY (CHU)
(72)**Name of Inventor :**
1)ZANNAD Faiez
2)ROSSIGNOL Patrick

(57) Abstract :
Method for monitoring the evolution of heart failure in a patient comprising determining in vitro a physiological human parameter in a patient comprising the steps consisting of: i) measuring values of two or more human parameters (P P ..P) at time t1 wherein one or more of the human parameters (P P ..P) is obtained from a human physiological fluid sample ii) measuring values of the same two or more parameters (P P ..P) at time t2 different from time t1 and iii) determining the physiological human parameter wherein the physiological human parameter is a plasma volume variation V between time t2 and time t1 from the values (P P ..P P P ..P) obtained at times t1 and t2 and devices for implementing said method.

No. of Pages : 28 No. of Claims : 20

(12) PATENT APPLICATION PUBLICATION
(19) INDIA
(22) Date of filing of Application :21/11/2013
(21) Application No.9375/CHENP/2013 A
(43) Publication Date : 07/11/2014

(54) Title of the invention : ORIENTATION REFERENCE SYSTEM FOR MEDICAL IMAGING

(51) International classification :A61B6/04,A61B1/005,A61B1/00
(31) Priority Document No :11166065.0
(32) Priority Date :13/05/2011
(33) Name of priority country :EPO
(86) International Application No :PCT/IB2012/052259
Filing Date :07/05/2012
(87) International Publication No :WO 2012/156861
(61) Patent of Addition to Application Number :NA
Filing Date :NA
(62) Divisional to Application Number :NA
Filing Date :NA

(71)**Name of Applicant :**
1)KONINKLIJKE PHILIPS N.V.
Address of Applicant :High Tech Campus 5 NL 5656 AE Eindhoven Netherlands
(72)**Name of Inventor :**
1)BELEI Peter
2)CARELSEN Bart

(57) Abstract :
The present invention relates to positioning a medical imaging system in relation to an object. In order to provide improved positioning possibilities which facilitate the workflow during an intervention a medical imaging apparatus (10) is provided with an image acquisition arrangement (12) which is positionable in relation to an object (16) to acquire image data (18) of the object from different directions. An output unit (14) is arranged to provide the image data. According to the invention first movement direction indicators (22) are provided to indicate possible movement directions of the image acquisition arrangement in relation to the object. Further a display apparatus (24) comprising a display area (26) to display image data (30) of an object provided by an image acquisition arrangement and a movement direction indication (28) may be provided wherein the movement direction indication is configured to provide second movement direction indicators (32) in relation to the displayed image data of the object to indicate possible movement directions of the image acquisition arrangement in relation to the object. The first movement direction indicators and the second movement direction indicators are equivalent.

No. of Pages : 31 No. of Claims : 15

(12) PATENT APPLICATION PUBLICATION
(19) INDIA
(22) Date of filing of Application :21/11/2013
(21) Application No.9376/CHENP/2013 A
(43) Publication Date : 07/11/2014

(54) Title of the invention : SENSOR AND VALVE INTEGRATED INTO A PATIENT INTERFACE

(51) International classification :A61M16/00
(31) Priority Document No :61/485789
(32) Priority Date :13/05/2011
(33) Name of priority country :U.S.A.
(86) International Application No :PCT/IB2012/052361
Filing Date :11/05/2012
(87) International Publication No :WO 2012/156885
(61) Patent of Addition to Application Number :NA
Filing Date :NA
(62) Divisional to Application Number :NA
Filing Date :NA

(71)**Name of Applicant :**
1)KONINKLIJKE PHILIPS N.V.
Address of Applicant :High Tech Campus 5 NL 5656 AE Eindhoven Netherlands
(72)**Name of Inventor :**
1)LUCCI Christopher Scott
2)LOCKHART Harold Allen
3)SMITH David W.
4)OCONNOR Nathan Francis
5)GRASHOW Jonathan Sayer

(57) Abstract :
An improved patient interface assembly and pressure support system integrate a pressure sensor and a valve into the patient interface assembly and employs closed loop control between the sensor and the valve in order to limit delay between the time at which a condition indicative of abnormal breathing or flow load during normal breathing is experienced by a patient and the time at which altered pressure support is received by the patient.

No. of Pages : 38 No. of Claims : 24

(12) PATENT APPLICATION PUBLICATION
(19) INDIA
(22) Date of filing of Application :21/11/2013
(21) Application No.9377/CHENP/2013 A
(43) Publication Date : 07/11/2014

(54) Title of the invention : LIST MODE DYNAMIC IMAGE RECONSTRUCTION

(51) International classification :G06T11/00
(31) Priority Document No :61/485135
(32) Priority Date :12/05/2011
(33) Name of priority country :U.S.A.
(86) International Application No :PCT/IB2012/052273
Filing Date :08/05/2012
(87) International Publication No :WO 2012/153262
(61) Patent of Addition to Application Number :NA
Filing Date :NA
(62) Divisional to Application Number :NA
Filing Date :NA

(71)**Name of Applicant :**
1)KONINKLIJKE PHILIPS N.V.
Address of Applicant :High Tech Campus 5 NL 5656 AE Eindhoven Netherlands
(72)**Name of Inventor :**
1)PREVRHAL Sven
2)BREDNO Joerg
3)PERKINS Amy
4)OLIVIER Patrick

(57) Abstract :
DA nuclear imaging apparatus (8) acquires nuclear imaging data comprising events wherein each event records at least spatial localization information and a timestamp for a nuclear decay event. An event preserving image reconstruction module (22) reconstructs the nuclear imaging data using an event preserving reconstruction algorithm to generate an image represented as an event preserving reconstructed image dataset (I) comprising for each event the timestamp and at least one spatial voxel assignment. One or more structures are identified in the image and independent motion compensation is performed for each structure. In one approach an events group is identified corresponding to the structure comprising events assigned to the structure by the event preserving reconstructed image dataset; a time binning of the events of each events group is optimized based on a motion profile for the structure; time bin images are generated; and the structure is spatially registered in the time bin images.

No. of Pages : 40 No. of Claims : 26

(12) PATENT APPLICATION PUBLICATION
(19) INDIA
(22) Date of filing of Application :21/11/2013
(21) Application No.9378/CHENP/2013 A
(43) Publication Date : 07/11/2014

(54) Title of the invention : PATIENT INTERFACE DEVICE INCLUDING A PNEUMATICALLY ADJUSTING FOREHEAD SUPPORT

(51) International classification :A61M16/06
(31) Priority Document No :61/485234
(32) Priority Date :12/05/2011
(33) Name of priority country :U.S.A.
(86) International Application No :PCT/IB2012/052325
Filing Date :10/05/2012
(87) International Publication No :WO 2012/153289
(61) Patent of Addition to Application Number :NA
Filing Date :NA
(62) Divisional to Application Number :NA
Filing Date :NA

(71)**Name of Applicant :**
1)KONINKLIJKE PHILIPS N.V.
Address of Applicant :High Tech Campus 5 NL 5656 AE Eindhoven Netherlands
(72)**Name of Inventor :**
1)ROTHERMEL Justin Edward
2)ZEDIKER Chad
3)HIEBER IV Robert Earl
4)KADAMUS Christopher James
5)HAIBACH Richard Thomas
6)GRIDER Keith Aaron
7)ABADILLA Arvin

(57) Abstract :
A patient interface device (8) includes a patient sealing assembly (12) adapted to communicate a flow of breathing gas within an airway of a patient the patient sealing assembly including a cushion (14) a frame member (16) coupled to the cushion and an adjustable forehead support assembly (26) coupled to the frame member. The adjustable forehead support assembly includes a forehead cushion (30) and an inflatable and deflatable bladder (48) coupled to the forehead cushion wherein inflation and deflation of the bladder causes the distal end (24) of the frame member to move relative to the forehead cushion in a manner wherein a pressure applied to a bridge of a nose of the patient by the cushion is adjusted.

No. of Pages : 23 No. of Claims : 15

(12) PATENT APPLICATION PUBLICATION
(19) INDIA
(22) Date of filing of Application :21/11/2013
(21) Application No.9379/CHENP/2013 A
(43) Publication Date : 07/11/2014

(54) Title of the invention : WAKE UP ALARM PROVIDING DEVICE

(51) International classification :G04G13/02
(31) Priority Document No :11165862.1
(32) Priority Date :12/05/2011
(33) Name of priority country :EPO
(86) International Application No :PCT/IB2012/052215
Filing Date :03/05/2012
(87) International Publication No :WO 2012/153241
(61) Patent of Addition to Application Number :NA
Filing Date :NA
(62) Divisional to Application Number :NA
Filing Date :NA

(71)**Name of Applicant :**
1)KONINKLIJKE PHILIPS N.V.
Address of Applicant :High Tech Campus 5 NL 5656 AE Eindhoven Netherlands
(72)**Name of Inventor :**
1)TRIKI Mahdi

(57) Abstract :
A wake up alarm providing device (10) is provided comprising a sound producing unit (11) and a control unit (12) coupled to the sound producing unit (11). The sound producing unit (11) is arranged to provide an audible wake up signal during an alert period. The control unit (12) controls the wake up signal to comprise a diffuse sound during a first part of the alert period and to comprise a localized sound during a subsequent part of the alert period.

No. of Pages : 18 No. of Claims : 11

(12) PATENT APPLICATION PUBLICATION
(19) INDIA
(22) Date of filing of Application :06/08/2014

(21) Application No.1644/KOLNP/2014 A
(43) Publication Date : 07/11/2014

(54) Title of the invention : RAIL RESTRAINING METHOD AND RAIL RESTRAINING DEVICE

(51) International classification :C21D9/04
(31) Priority Document No :NA
(32) Priority Date :NA
(33) Name of priority country :NA
(86) International Application No :PCT/JP2012/052613
Filing Date :06/02/2012
(87) International Publication No :WO 2013/118242
(61) Patent of Addition to Application Number :NA
Filing Date :NA
(62) Divisional to Application Number :NA
Filing Date :NA

(71)**Name of Applicant :**
1)JFE STEEL CORPORATION
Address of Applicant :2-3, Uchisaiwai-cho 2-chome, Chiyoda-ku, Tokyo 100-0011, Japan
(72)**Name of Inventor :**
1)KOJO, Rinya
2)OKUSHIRO, Kenji
3)KATAOKA, Yuzuru
4)YOSHIDA, Yoshikazu
5)TAKAHASHI, Hideki
6)MATSUOKA, Ryo

(57) Abstract :
When forcibly cooling the head (11) and the foot (13) of a hot-rolled rail (10), prescribed positions within 2m of both end surfaces of the rail (10) in the lengthwise direction of the rail (10) are set as first restraining positions, prescribed positions 3-10m from the first restraining positions in the direction of the center of the rail (10) in the lengthwise direction of the rail (10) are set as second restraining positions, and vertical movement of the rail (10) is restrained at the first and second restraining positions using a restraining force (F; kN) that satisfies prescribed conditions.

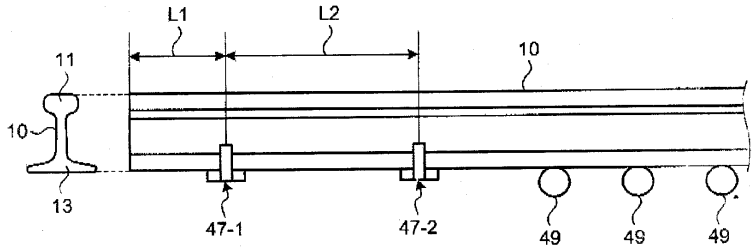

No. of Pages : 27 No. of Claims : 2

(12) PATENT APPLICATION PUBLICATION
(19) INDIA
(22) Date of filing of Application :07/08/2014

(21) Application No.1647/KOLNP/2014 A
(43) Publication Date : 07/11/2014

(54) Title of the invention : VISUALLY INSPECTING OPTICAL FIBERS

(51) International classification	:G01N21/896,G01M11/00,G01N21/952
(31) Priority Document No	:61/596,038
(32) Priority Date	:07/02/2012
(33) Name of priority country	:U.S.A.
(86) International Application No	:PCT/EP2013/052032
Filing Date	:01/02/2013
(87) International Publication No	:WO 2013/117497
(61) Patent of Addition to Application Number	:NA
Filing Date	:NA
(62) Divisional to Application Number	:NA
Filing Date	:NA

(71)**Name of Applicant :**
1)TYCO ELECTRONICS RAYCHEM BVBA
Address of Applicant :Diestsesteenweg 692, B-3010 Kessel-Lo, BELGIUM
(72)**Name of Inventor :**
1)KLEIN, Marvin
2)MAKSIMOVIC, Milan
3)VAN DEN EIJKEL, Gerard Cornelis

(57) Abstract :
A visual inspection system (100, 200) for optical fibers (150) includes at least a pattern source (120, 220A, 220B, 220C, 520); at least a first illumination source (130, 230A, 230B, 230C, 510, 522) to direct light towards an optical fiber (150); and at least a first camera (140, 240A, 240B, 240C, 40) positioned at an opposite side of the fiber (150) from the pattern source (120, 220A, 220B, 220C, 520). At least one image (170, 180, 190) of the optical fiber (150) is taken and a pattern visible through the optical fiber (150) in the image (170, 180, 190) may be analyzed to detect distortions in the pattern.

No. of Pages : 53 No. of Claims : 44

(12) PATENT APPLICATION PUBLICATION
(19) INDIA
(22) Date of filing of Application :18/08/2014
(21) Application No.1720/KOLNP/2014 A
(43) Publication Date : 07/11/2014

(54) Title of the invention : BIOSENSOR

(51) International classification :G01N27/327,G01N27/416
(31) Priority Document No :2012-058430
(32) Priority Date :15/03/2012
(33) Name of priority country :Japan
(86) International Application No :PCT/JP2013/056594
Filing Date :11/03/2013
(87) International Publication No :WO 2013/137172
(61) Patent of Addition to Application Number :NA
Filing Date :NA
(62) Divisional to Application Number :NA
Filing Date :NA

(71)**Name of Applicant :**
1)MURATA MANUFACTURING CO., LTD.
Address of Applicant :10-1, Higashikotari 1-chome, Nagaokakyo-shi, Kyoto 6178555, Japan
(72)**Name of Inventor :**
1)TAKAGI, Jun
2)OOE, Hideaki
3)YOKOYAMA, Kenji
4)HIRATSUKA, Atsunori
5)SASAKI, Noriko

(57) Abstract :
Provided is a technique by which reduction of a mediator during storage can be suppressed. In a reagent layer (an enzyme layer (106b) and a mediator layer (106c)), which is separately laminated on a hydrophilic layer (106a) that contains a hydrophilic polymer having a double bond of oxygen atoms, contains an enzyme, a mediator and a hydrophilic polymer having no double bond of oxygen atoms. Consequently, the mediator is surrounded by the hydrophilic polymer having no double bond of oxygen atoms, and thus it becomes possible to prevent the mediator contained in the mediator layer (106c) from coming into contact with CMC, which is the hydrophilic polymer of the hydrophilic layer (106a), during storage. As a result, reduction of the mediator by the hydrophilic polymer having a double bond of oxygen atoms in the hydrophilic layer (106a) can be suppressed.

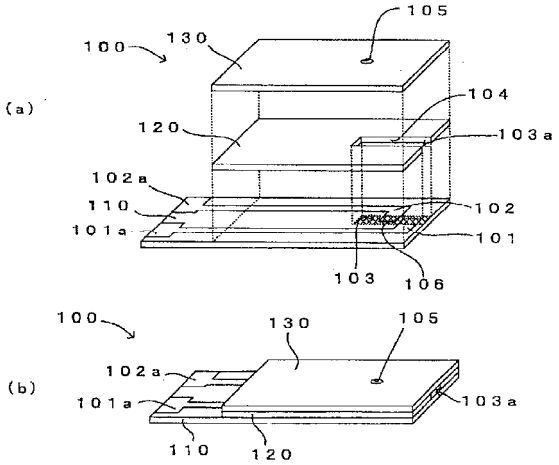

No. of Pages : 28 No. of Claims : 6

(12) PATENT APPLICATION PUBLICATION
(19) INDIA
(22) Date of filing of Application :18/08/2014

(21) Application No.1721/KOLNP/2014 A
(43) Publication Date : 07/11/2014

(54) Title of the invention : SYSTEM AND METHOD FOR CONTROLLING MOTION USING TIME SYNCHRONIZATION BETWEEN PICTURE AND MOTION

(51) International classification :H04N5/222
(31) Priority Document No :10-2012-0016888
(32) Priority Date :20/02/2012
(33) Name of priority country :Republic of Korea
(86) International Application No :PCT/KR2012/010501
Filing Date :06/12/2012
(87) International Publication No :WO 2013/125773
(61) Patent of Addition to Application Number :NA
Filing Date :NA
(62) Divisional to Application Number :NA
Filing Date :NA

(71)**Name of Applicant :**
1)CJ 4DPLEX CO., LTD
Address of Applicant :325, Jeungsan-ro, Eunpyeong-gu, Seoul 122-935 REPUBLIC OF KOREA
(72)**Name of Inventor :**
1)CHOI, Jae Sung
2)PARK, Jin Yong

(57) Abstract :
Provided are a system and a method for controlling a motion using time synchronization between a picture and the motion, and more particularly, a motion code corresponding to a time code is prestored before showing the picture and the motion is controlled according to the prestored motion code when the picture showing starts while a current motion driving time is compared with a picture reference time and then synchronized to provide a high-resolution precision motion to a user while achieving accurate synchronization with the picture.

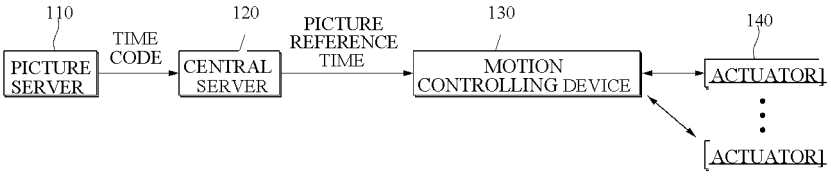

No. of Pages : 14 No. of Claims : 8

(12) PATENT APPLICATION PUBLICATION
(19) INDIA
(22) Date of filing of Application :18/08/2014
(21) Application No.1722/KOLNP/2014 A
(43) Publication Date : 07/11/2014

(54) Title of the invention : FORMULATIONS OF 3-(6-(1-(2.2-DIFLUOROBENZO[D][1, 3]DIOXOL-5-YL) CYCLOPROPANECARBOXAMIDO)-3-METHYLPYRIDIN-2-YL)BENZOIC ACID

(51) International classification :A61K9/16,A61K9/20,A61K9/28
(31) Priority Document No :61/590,479
(32) Priority Date :25/01/2012
(33) Name of priority country :U.S.A.
(86) International Application No :PCT/US2013/023100
Filing Date :25/01/2013
(87) International Publication No:WO 2013/112804
(61) Patent of Addition to Application Number :NA
Filing Date :NA
(62) Divisional to Application Number :NA
Filing Date :NA

(71)**Name of Applicant :**
1)VERTEX PHARMACEUTICALS INCORPORATED
Address of Applicant :130 Waverly Street, Cambridge, MA 02138 U.S.A.
(72)**Name of Inventor :**
1)VERWIJIS, Marinus, Jacobus

(57) Abstract :
A pharmaceutical composition comprising Compound 1, (3-(6-(1-(2,2- difluorobenzo [d] [1,3] dioxol-5 -yl) cyclopropanecarboxamido)-3 -methylpyridin-2-yl)benzoic acid), and at least one excipient selected from: a filler, a disintegrant, a surfactant, a binder, and a lubricant, the composition being suitable for oral administration to a patient in need thereof to treat a CFTR mediated disease such as Cystic Fibrosis. Processes of preparing pharmaceutical compositions comprising Compound 1 are also disclosed.

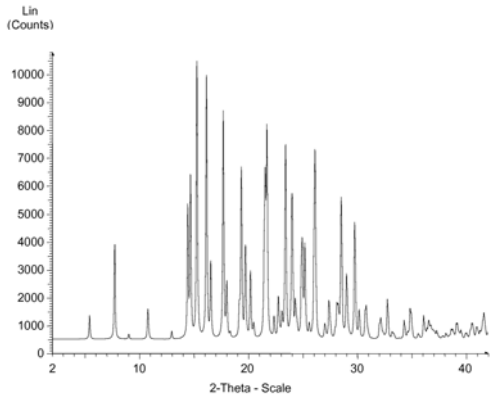

No. of Pages : 169 No. of Claims : 54

(12) PATENT APPLICATION PUBLICATION
(19) INDIA
(22) Date of filing of Application :07/08/2014
(21) Application No.1648/KOLNP/2014 A
(43) Publication Date : 07/11/2014

(54) Title of the invention : OPTICAL FIBER CONNECTION SYSTEM INCLUDING OPTICAL FIBER ALIGNMENT DEVICE

(51) International classification :G02B6/38,G02B6/36
(31) Priority Document No :61/596,035
(32) Priority Date :07/02/2012
(33) Name of priority country :U.S.A.
(86) International Application No :PCT/EP2013/052345
Filing Date :06/02/2013
(87) International Publication No :WO 2013/117598
(61) Patent of Addition to Application Number :NA
Filing Date :NA
(62) Divisional to Application Number :NA
Filing Date :NA

(71)**Name of Applicant :**
1)TYCO ELECTRONICS CORPORATION
Address of Applicant :1050 Westlakes Drive, Berwyn, Pennsylvania 19312 U.S.A.
2)TYCO ELECTRONICS RAYCHEM BVBA
(72)**Name of Inventor :**
1)Michael GURRERI
2)Robert Charles FLAIG
3)Randall Bobby PAUL
4)Danny Willy August VERHEYDEN
5)David Donald ERDMAN
6) Dwight A. BRETZ

(57) Abstract :
The present disclosure relates to an optical fiber alignment device that has an alignment housing that includes first and second ends. The alignment housing defines a fiber insertion axis that extends through the alignment housing between the first and second ends. The alignment housing includes a fiber alignment region at an intermediate location between the first and second ends. First and second fiber alignment rods are positioned within the alignment housing. The first and second fiber alignment rods cooperate to define a fiber alignment groove that extends along the fiber insertion axis. The first and second fiber alignment rods each having rounded ends positioned at the first and second ends of the alignment housing.

No. of Pages : 72 No. of Claims : 62

(12) PATENT APPLICATION PUBLICATION
(19) INDIA
(22) Date of filing of Application :18/08/2014
(21) Application No.1724/KOLNP/2014 A
(43) Publication Date : 07/11/2014

(54) Title of the invention : ASYNCHRONOUS VIDEO INTERVIEW SYSTEM

(51) International classification :H04N7/15,H04L12/18
(31) Priority Document No :61/602,566
(32) Priority Date :23/02/2012
(33) Name of priority country :U.S.A.
(86) International Application No :PCT/US2013/027491
Filing Date :22/02/2013
(87) International Publication No :WO 2013/126823
(61) Patent of Addition to Application Number :NA
Filing Date :NA
(62) Divisional to Application Number :NA
Filing Date :NA

(71)**Name of Applicant :**
1)COLLEGENET, INC.
Address of Applicant :805 SW Broadway, Suite 1600, Portland, OR 97205 U.S.A.
(72)**Name of Inventor :**
1)BOLTON, Jeff, M.
2)WOLFSTON, James, H.

(57) Abstract :
Aspects of an asynchronous video interview system and related techniques include a server that receives a plurality of pre-recorded video prompts, generates an interview script, transmits a video prompt from the interview script to be displayed at a client computing device, and receives a streamed video response from the client computing device. The server can perform algorithmic analysis on content of the video response. In another aspect, a server obtains response preference data indicating a timing parameter for a response. In another aspect, a video prompt and an information supplement (e.g., a news item) that relates to the content of the video prompt are transmitted. In another aspect, a server automatically selects a video prompt (e.g., a follow-up question) to be displayed at the client computing device (e.g., based on a response or information about an interviewee).

No. of Pages : 53 No. of Claims : 40

(12) PATENT APPLICATION PUBLICATION
(19) INDIA
(22) Date of filing of Application :18/08/2014
(21) Application No.1725/KOLNP/2014 A
(43) Publication Date : 07/11/2014

(54) Title of the invention : METHOD FOR MANUFACTURING BIOSENSOR

(51) International classification :G01N27/327,G01N27/416
(31) Priority Document No :2012-058431
(32) Priority Date :15/03/2012
(33) Name of priority country :Japan
(86) International Application No :PCT/JP2013/056595
Filing Date :11/03/2013
(87) International Publication No :WO 2013/137173
(61) Patent of Addition to Application Number :NA
Filing Date :NA
(62) Divisional to Application Number :NA
Filing Date :NA

(71)**Name of Applicant :**
1)MURATA MANUFACTURING CO., LTD.
Address of Applicant :10-1, Higashikotari 1-chome, Nagaokakyo-shi, Kyoto 6178555 Japan
(72)**Name of Inventor :**
1)TAKAGI, Jun
2)OOE, Hideaki
3)YOKOYAMA, Kenji
4)HIRATSUKA, Atsunori
5)SASAKI, Noriko

(57) Abstract :
Provided is a technique by which a biosensor that is able to be stored for a long period of time can be easily manufactured by having an enzyme layer and a mediator layer contain a hydrophilic polymer having no double bond of oxygen atoms. Since an enzyme layer (106b) and a mediator layer (106c) are formed together as a reaction layer (106), it is not necessary to individually form the enzyme layer (106b) and the mediator layer (106c) on a cover layer (130) and on an electrode layer (110) respectively as in the case of conventional biosensors, and thus the reaction layer (106) can be formed easily. Since the enzyme layer (106b) and the mediator layer (106c) respectively contain a hydrophilic polymer having no double bond of oxygen atoms, reaction between the enzyme and the mediator is suppressed and reduction of the mediator in the mediator layer (106c) is also suppressed during storage. Consequently, a biosensor (100) that is able to be stored for a long period of time can be easily manufactured.

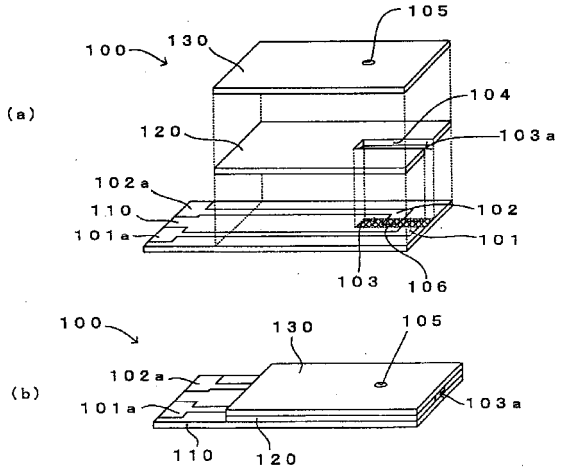

No. of Pages : 30 No. of Claims : 6

(12) PATENT APPLICATION PUBLICATION
(19) INDIA
(22) Date of filing of Application :18/08/2014
(21) Application No.1726/KOLNP/2014 A
(43) Publication Date : 07/11/2014

(54) Title of the invention : HEAT TREATING OIL COMPOSITION

(51) International classification :C21D1/58,C10M143/00,C10M169/04
(31) Priority Document No :2012-060842
(32) Priority Date :16/03/2012
(33) Name of priority country :Japan
(86) International Application No :PCT/JP2013/057142
Filing Date :14/03/2013
(87) International Publication No :WO 2013/137376
(61) Patent of Addition to Application Number :NA
Filing Date :NA
(62) Divisional to Application Number :NA
Filing Date :NA

(71)**Name of Applicant :**
1)IDEMITSU KOSAN CO.,LTD.
Address of Applicant :1-1, Marunouchi 3-chome, Chiyoda-ku, Tokyo 1008321 Japan
(72)**Name of Inventor :**
1)NOGUCHI Kenro
2)KATO Masayuki
3)ICHITANI Katsumi
4)KOBESSHO Masahiro
5)YAMADA Masahiro
6)TAKASAKI Norihiro

(57) Abstract :
This heat treating oil composition is obtained by blending (A) 50 to 95 mass% of a base oil which exhibits a kinematic viscosity of 5 to 60mm2/s at 40°C, (B) 5 to 50 mass% of another base oil which exhibits a kinematic viscosity of 300mm2/s or more at 40°C and (C) an α-olefin copolymer, each mass% being relative to the composition. The heat treating oil composition can reduce the dispersions of stress and hardness in group hardening.

No. of Pages : 16 No. of Claims : 5

(12) PATENT APPLICATION PUBLICATION
(19) INDIA
(22) Date of filing of Application :17/01/2012
(21) Application No.109/KOLNP/2012 A
(43) Publication Date : 07/11/2014

(54) Title of the invention : GALVANIC CELL

(51) International classification :H01M 10/28
(31) Priority Document No :10 2009 033 932.9
(32) Priority Date :20/07/2009
(33) Name of priority country :Germany
(86) International Application No :PCT/EP2010/004438
Filing Date :20/07/2010
(87) International Publication No :WO/2011/009595
(61) Patent of Addition to Application Number :NA
Filing Date :NA
(62) Divisional to Application Number :NA
Filing Date :NA

(71)**Name of Applicant :**
1)LI-TEC BATTERY GmbH
Address of Applicant :Am Wiesengrund 7 01917 Kamenz Germany
(72)**Name of Inventor :**
1)HOHENTHANNER Claus-Rupert;
2)BRASSE rer. nat. Claudia;
3)SCHMIDT Torsten;
4)SCHOENE Heike;
5)MEINTSCHEL Jens;

(57) Abstract :
According to the invention, electric arresters (302, 303, 402, 403) with opposite electric polarity extend from a housing of a galvanic cell (301, 401) at several points for dissipating energy stored in the galvanic cell. At other points, the housing comprises a design (304, 305, 306, 307) supporting the space-saving fastening of the storage cell or a space-saving arrangement of fastening elements (408, 409, 410, 411) for fastening the storage cell within an installation.

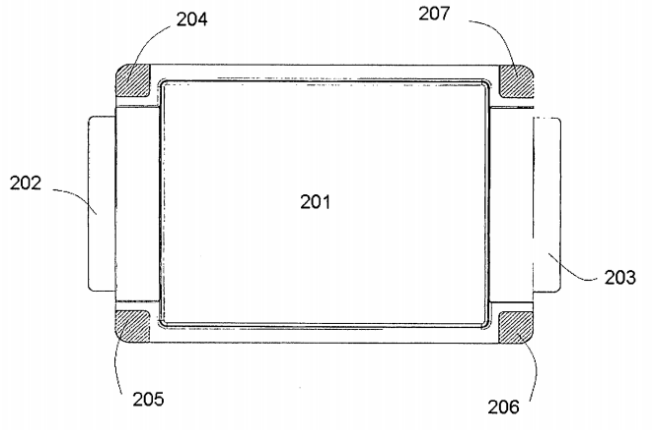

No. of Pages : 16 No. of Claims : 5

(12) PATENT APPLICATION PUBLICATION
(19) INDIA
(22) Date of filing of Application :11/08/2014
(21) Application No.1661/KOLNP/2014 A
(43) Publication Date : 07/11/2014

(54) Title of the invention : TRANSMISSION TESTING DEVICE

(51) International classification :G01M13/02
(31) Priority Document No :2012-010687
(32) Priority Date :23/01/2012
(33) Name of priority country :Japan
(86) International Application No :PCT/JP2013/050963
Filing Date :18/01/2013
(87) International Publication No :WO 2013/111685
(61) Patent of Addition to Application Number :NA
Filing Date :NA
(62) Divisional to Application Number :NA
Filing Date :NA

(71)**Name of Applicant :**
1)MEIDENSHA CORPORATION
Address of Applicant :1-1, Osaki 2-chome, Shinagawa-ku, Tokyo 141-6029 Japan
(72)**Name of Inventor :**
1)Takahiro NAKAGAWA

(57) Abstract :
The interposing of an intermediate shaft and a torque meter between the test piece and the dynamometer in transmission testing devices in which the test piece was disposed in a controlled environment chamber not only made the axial direction long and a large floor contact area necessary but also caused twisting of the shaft and poor rigidity. The present invention is configured by providing a hollow spacer between the face plate of the controlled environment chamber and the test piece attachment holder to which the test piece is attached. A flange with an H shaped side surface is disposed in the hollow section of the spacer and one end of the flange is connected to an adaptor flange that is fixed to the test piece. The other end of the flange is connected to the rotating shaft of the dynamometer via the torque meter.

No. of Pages : 28 No. of Claims : 9

(12) PATENT APPLICATION PUBLICATION
(19) INDIA
(22) Date of filing of Application :11/08/2014

(21) Application No.1662/KOLNP/2014 A
(43) Publication Date : 07/11/2014

(54) Title of the invention : REUSABLE AEROSOL ACTUATOR DEVICES

(51) International classification :B67D5/60
(31) Priority Document No :61/602,762
(32) Priority Date :24/02/2012
(33) Name of priority country :U.S.A.
(86) International Application No :PCT/US2013/027404
Filing Date :22/02/2013
(87) International Publication No :WO 2013/126755
(61) Patent of Addition to Application Number :NA
Filing Date :NA
(62) Divisional to Application Number :NA
Filing Date :NA

(71)**Name of Applicant :**
1)MEADWESTVACO CALMAR, INC.
Address of Applicant :501 South 5th Street, Richmond, Virginia 23219-0501 U.S.A.
(72)**Name of Inventor :**
1)Steven A. SELL

(57) Abstract :
According to certain embodiments of the invention, an aerosol trigger actuator may be removably connected to an aerosol container. In some instances, an attachment adapter may be fixed to an aerosol container and a trigger actuator may be configured to snap onto, twist onto, or otherwise attach to the attachment adapter so that the trigger actuator is attached to the container. In other embodiments, an attachment adapter and trigger actuator may be assembled together and then assembled to a container.

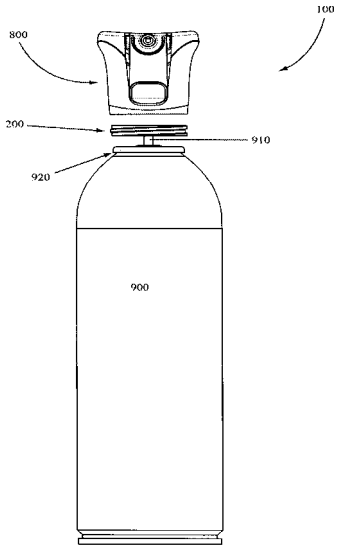

No. of Pages : 13 No. of Claims : 13

(12) PATENT APPLICATION PUBLICATION
(19) INDIA
(22) Date of filing of Application :19/08/2014
(21) Application No.1735/KOLNP/2014 A
(43) Publication Date : 07/11/2014

(54) Title of the invention : BLADE OF AXIAL FLOW IMPELLER AND AXIAL FLOW IMPELLER

(51) International classification	:B01F 7/00, B01F 7/18
(31) Priority Document No	:20125193
(32) Priority Date	:20/02/2012
(33) Name of priority country	:Finland
(86) International Application No	:PCT/FI2013/050185
Filing Date	:18/02/2013
(87) International Publication No	:WO 2013/124539
(61) Patent of Addition to Application Number	:NA
Filing Date	:NA
(62) Divisional to Application Number	:NA
Filing Date	:NA

(71)**Name of Applicant :**
1)OUTOTEC (FINLAND) OY
Address of Applicant :PUOLIKKOTIE 10 FI-02230 ESPOO FINLAND
(72)**Name of Inventor :**
1)XIA, JILIANG
2)TYLLI, NICLAS
3)HIRSI, TUOMAS

(57) Abstract :
The invention relates to a blade (4) of an axial flow impeller (1). Dimensioning rules for the blade (4) are presented: A = 0,2R; B = 0,2Wb; C = 0,2R; D = 0,2Wb;E = 0,5R; F = (0,1...0,2)R; G = 0,2Wb; H = 0,25R; I = 0,1R; J = 0,4R; K = 0,1Wb. The first angle α = 6º ± 1º, the second angle α2 = 8º ± 1º and the third angle α 3 = 19º to 25º. R is the lengthwise dimension from the axis of rotation (x) of the impeller to the tip (7) of the blade (4). Width Wb is the widthwise dimension of the blade perpendicularly to the lengthwise direction. The invention also relates to an axial flow impeller (1) having said blades (4).

No. of Pages : 25 No. of Claims : 6

(12) PATENT APPLICATION PUBLICATION
(19) INDIA
(22) Date of filing of Application :19/08/2014
(21) Application No.1736/KOLNP/2014 A
(43) Publication Date : 07/11/2014

(54) Title of the invention : CARBON NANOTUBE PRODUCTION METHOD TO STIMULATE SOIL MICROORGANISMS AND PLANT GROWTH PRODUCED FROM THE EMISSIONS OF INTERNAL COMBUSTION

(51) International classification	:A01G7/02,B01D53/46,C01B31/00
(31) Priority Document No	:61/591,437
(32) Priority Date	:27/01/2012
(33) Name of priority country	:U.S.A.
(86) International Application No	:PCT/CA2013/050058
Filing Date	:28/01/2013
(87) International Publication No	:WO 2013/110202
(61) Patent of Addition to Application Number	:NA
Filing Date	:NA
(62) Divisional to Application Number	:NA
Filing Date	:NA

(71)**Name of Applicant :**
1)N/C QUEST INC.
Address of Applicant :Box 2410, Pincher Creek, Alberta T0K 1W0 CANADA
(72)**Name of Inventor :**
1)LEWIS, Gary

(57) Abstract :
A carbon nanotube production system is used for improving plant growth characteristics for a plant growing medium, for example soil in an agricultural field. The system includes an internal combustion engine, for example a tractor engine, which is arranged to combust a fuel mixture therein which includes a blend of fuels and additives including a carbon nanotube seeding material. The engine is operated in pyrolysis to produce exhaust emissions containing black carbon ultrafine and nano soot, for example by towing an agricultural implement across the agricultural field. At least a portion of the exhaust emissions is captured and conditioned to process the carbon soot into carbon nanotubes. The conditioned exhaust emissions and carbon nanotubes therein are then applied to the plant growing medium, for example by using the agricultural implement to incorporate the conditioned exhaust into the soil.

No. of Pages : 34 No. of Claims : 45

(12) PATENT APPLICATION PUBLICATION
(19) INDIA
(22) Date of filing of Application :12/08/2014

(21) Application No.1675/KOLNP/2014 A
(43) Publication Date : 07/11/2014

(54) Title of the invention : A REAR WHEEL SUSPENSION,AND A MOTOR VEHICLE

(51) International classification :B60G 21/05
(31) Priority Document No :1250185.4
(32) Priority Date :29/02/2012
(33) Name of priority country :Sweden
(86) International Application No :PCT/EP/2013/052935
Filing Date :14/02/2013
(87) International Publication No :WO 2013/127635
(61) Patent of Addition to Application Number :NA
Filing Date :NA
(62) Divisional to Application Number :NA
Filing Date :NA

(71)**Name of Applicant :**
1)SWEDISH ADVANCED AUTOMOTIVE BUSINESS AB
Address of Applicant :STRÖMGATAN 5 S-462 41 VÄNERSBORG, SWEDEN
2)BENTELER AUTOMOBILTECHNIK GMBH
(72)**Name of Inventor :**
1)ROLAND, MAGNUS
2)BURÅNIUS, GUNNAR

(57) Abstract :
A rear wheel suspension for a motor vehicle comprises first and second suspension devices (8a, 8b) carrying a right and left, respectively, rear wheel rotating in a wheel plane forming a toe angle (δ) with respect to a longitudinal axis (X) and a camber angle with respect to a vertical axis (Z). A transversal beam (10) connects the first suspension device (8a) and the second suspension device (8b). Each suspension device comprises a wheel spindle housing (11a, 11b), defining a wheel centre, and a leading link (14a, 14b) and a trailing link (15a, 15b) connected to the vehicle body. The transversal beam permits bending for vertical loads to provide the suspension devices a deflection to adjust the toe and camber angles such that the changes of the camber angles when the wheel planes converge towards an upper point above the wheel centre connect to a controlled adjustment of the toe angles such that the wheel planes converge directionally towards a rear point located rearwards of the wheel centre.

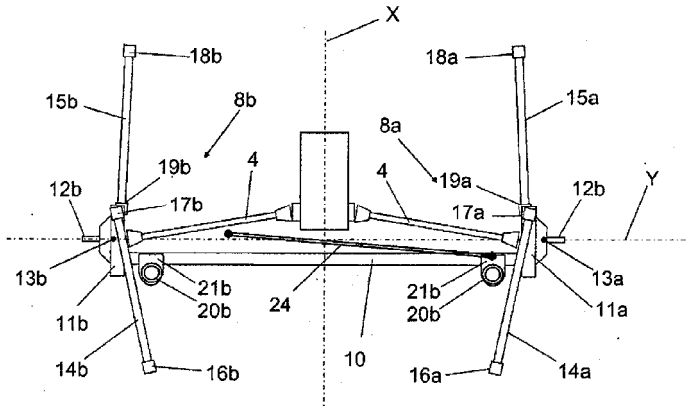

No. of Pages : 29 No. of Claims : 15

(12) PATENT APPLICATION PUBLICATION
(19) INDIA
(22) Date of filing of Application :20/08/2014
(21) Application No.1746/KOLNP/2014 A
(43) Publication Date : 07/11/2014

(54) Title of the invention : STRUCTURE COMPONENT SHAPE OPTIMIZATION ANALYSIS DEVICE

(51) International classification :G06F 17/50
(31) Priority Document No :2012-058088
(32) Priority Date :15/03/2012
(33) Name of priority country :Japan
(86) International Application No :PCT/JP2013/055659
Filing Date :01/03/2013
(87) International Publication No :WO 2013/137022
(61) Patent of Addition to Application Number :NA
Filing Date :NA
(62) Divisional to Application Number :NA
Filing Date :NA

(71)**Name of Applicant :**
1)JFE STEEL CORPORATION
Address of Applicant :2-3, UCHISAIWAI-CHO 2-CHOME, CHIYODA-KU, TOKYO 1000011 Japan
(72)**Name of Inventor :**
1)SAITO, TAKANOBU

(57) Abstract :
An optimization analyzing apparatus, configured of a computer, includes: a part shape pattern setting device that divides a part of a structural body including a two- dimensional element and/or a three-dimensional element into a plurality of segments in an axis direction, changes a height or width of a cross section of each of the segments divided, and sets a part shape pattern; a rigidity analyzing device that performs plural kinds of rigidity analyses of the structural body in a state in which the part for which the part shape pattern has been set by the part shape pattern setting device is incorporated in the structural body and obtains any of rigidity, improvement rate of rigidity, and improvement rate of rigidity per increased unit weight of the structural body for each kind of the rigidity analyses; a multivariate analyzing device that performs a multivariate analysis for each kind of the rigidity analyses where any of the rigidity, the improvement rate of rigidity, and the improvement rate of rigidity per increased unit weight of the structural body that have been obtained by the rigidity analyzing device is a response variable and any of the height, the width, and a section modulus of each of the segments divided is an explanatory variable, and obtains a multiple regression coefficient, and a coefficient of determination or an adjusted R-square; a rigidity analysis selection device that selects, based on any of the coefficient of determination and the adjusted R-square, any having strong correlation from among the rigidity analyses of the plural kinds; and a cross-sectional shape determination device that determines, based on the multiple regression coefficient calculated by the multivariate analyzing device in a rigidity analysis selected by the rigidity analysis selection device, a cross-sectional shape of each of the segments divided.

No. of Pages : 65 No. of Claims : 3

(12) PATENT APPLICATION PUBLICATION
(19) INDIA
(22) Date of filing of Application :20/08/2014
(21) Application No.1747/KOLNP/2014 A
(43) Publication Date : 07/11/2014

(54) Title of the invention : METHOD FOR FRICTION-STIR WELDING OF STEEL SHEET

(51) International classification :B23K20/12,C22C38/00
(31) Priority Document No :2012-086924
(32) Priority Date :06/04/2012
(33) Name of priority country :Japan
(86) International Application No :PCT/JP2013/002349
Filing Date :04/04/2013
(87) International Publication No :WO 2013/150801
(61) Patent of Addition to Application Number :NA
Filing Date :NA
(62) Divisional to Application Number :NA
Filing Date :NA

(71)**Name of Applicant :**
1)JFE STEEL CORPORATION
Address of Applicant :2-3,UCHISAIWAI-CHO 2-CHOME, CHIYODA-KU, TOKYO 1000011 Japan
(72)**Name of Inventor :**
1)MATSUSHITA, MUNEO
2)IKEDA, RINSEI
3)KITANI, YASUSHI

(57) Abstract :
When friction-stir welding steel sheets, for the rotating tool, rotation speed RS is set 100-1000 rpm, rotational torque RT 50-500 Nm, and travel speed TS 10-1000 mm/min, and HIPT (kJ/mm2) is controlled to be in a range of 0.3-1.5. The steel sheets that are used have a composition including 0.01-0.2 mass% of C, 0.5-2.0 mass% of Mn, 0.6 mass% or less of Si, 0.030 mass% or less of P, 0.015 mass% or less of S, and 0.0060 mass% or less of O, with a content of Ti [%Ti] and a content of N [%N] being restricted in relation to the HIPT, Ceq being 0.5 mass% or less, and the balance being Fe and incidental impurities. As a result, local change in the frictional heat and plastic flow generated by friction can be prevented, yielding a weld portion with uniform and good toughness.

No. of Pages : 27 No. of Claims : 3

(12) PATENT APPLICATION PUBLICATION
(19) INDIA
(22) Date of filing of Application :18/10/2012

(21) Application No.1181/KOL/2012 A
(43) Publication Date : 07/11/2014

(54) Title of the invention : TWO NOVEL PENTACYCLIC TRITERPENOIDS FROM THE LEAVES OF TERMINALIA ARJUNA

(51) International classification	:C07J 53/00	
(31) Priority Document No	:NA	
(32) Priority Date	:NA	
(33) Name of priority country	:NA	
(86) International Application No	:NA	
Filing Date	:NA	
(87) International Publication No	: NA	
(61) Patent of Addition to Application Number	:NA	
Filing Date	:NA	
(62) Divisional to Application Number	:NA	
Filing Date	:NA	

(71)**Name of Applicant :**
1)BISWAS MOULISHA
Address of Applicant :P-199, LAKE TOWN, BLOCK-A, FLAT-2, KOLKATA-700089 WEST BENGAL,INDIA
2)PALLAB KANTI HALDER
(72)**Name of Inventor :**
1)BISWAS MOULISHA
2)PALLAB KANTI HALDER

(57) Abstract :
Terminalia arjuna Roxb. (Combretaceae), commonly known as Arjuna, is a large tree, often with buttressed trunk, smooth grey bark and about 20-25 m in height. The invention deals with the extraction, isolation, characterization and structure elucidation of the pure compounds isolated from the methanol extract of the leaves of the Terminalia arjuna. The leaves of T. arjuna were collected during January 2008 from Nadia, West Bengal, India. The dried leaves of Terminalia arjuna (5 kgs) were successively extracted with petroleum ether (60-80°C), chloroform and methanol by percolation method. The solvent was evaporated under reduced pressure to get semisolid mass of each extract. Preliminary phytochemical studies of methanol extract of plant revealed the presence of alkaloids, triterpenoids, tannins and flavonoids. Isolation of compounds was performed using the Column Chromatography Techniques. Total crude extract was chromatographed over the silica Gel packed column (Mesh size 100-200). Graded elution was carried out with the various solvent mixture e.g. petroleum ether, pet ether - chloroform mixture, chloroform, chloroform - methanol mixture. Repeated chromatographic purifications of the fractions and preparative thin layer chromatography led to isolation of one new triterpenoid acid that is 3B, 16B, 27 Trihydroxy olean 12-en 28 oic acid (Anjanoic acid) and one new triterpenoid glycoside that is 3-O-B-D-glucopyranosyl-2a, 3B, 19a - trihydroxy urs -12 en- 28-oic acid (Anjanoside) and the characterization was done by IR, NMR, 2D, MASS Spectroscopy. The compounds were screened for their Cytotoxic potentials against Ehrlich Ascites Carcinoma cell lines by MTT Assay. It had been observed that 100 ug/ml Compound I and Compound II showed 70.28% and 75.82% cytotoxicity accordingly (Table 3 & 4). The IC50 values were found to be 35.14 ug/ml and 37.91 ug/ml for Compound I & II accordingly. The death of the cells caused by the test drug under study might be due to the loss of mitochondria which is one of the hallmarks of the apoptosis pathway.

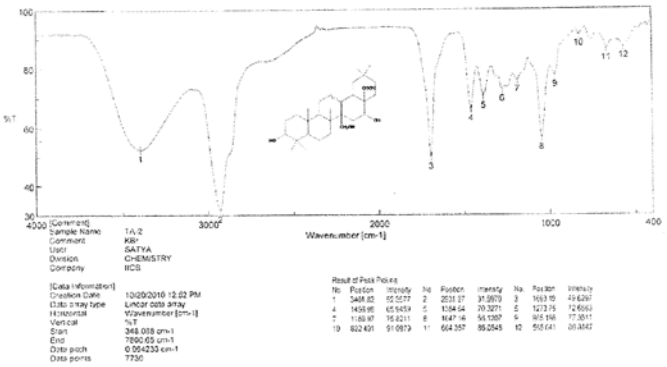

No. of Pages : 27 No. of Claims : 4

(12) PATENT APPLICATION PUBLICATION
(19) INDIA
(22) Date of filing of Application :22/08/2014
(21) Application No.1774/KOLNP/2014 A
(43) Publication Date : 07/11/2014

(54) Title of the invention : METHODS AND COMPOSITIONS FOR TREATING HUNTINGTON'S DISEASE

(51) International classification :C12Q1/68
(31) Priority Document No :61/605,028
(32) Priority Date :29/02/2012
(33) Name of priority country :U.S.A.
(86) International Application No :PCT/US2013/028348
Filing Date :28/02/2013
(87) International Publication No :WO 2013/130824
(61) Patent of Addition to Application Number :NA
Filing Date :NA
(62) Divisional to Application Number :NA
Filing Date :NA

(71)**Name of Applicant :**
1)SANGAMO BIOSCIENCES, INC.
Address of Applicant :Point Richmond Tech Center, 501 Canal Blvd., Suite A100, Richmond, CA 94804 U.S.A.
(72)**Name of Inventor :**
1)MILLER, Jeffrey, C.
2)REBAR, Edward, J.
3)ZHANG, H., Steve

(57) Abstract :
Disclosed herein are methods and compositions for treating or preventing Huntingtons Disease.

No. of Pages : 116 No. of Claims : 19

(12) PATENT APPLICATION PUBLICATION
(19) INDIA
(22) Date of filing of Application :22/08/2014
(21) Application No.1775/KOLNP/2014 A
(43) Publication Date : 07/11/2014

(54) Title of the invention : CONTACT MATERIAL

(51) International classification :C22C5/06,H01B1/02,H01H1/02
(31) Priority Document No :12161247.7
(32) Priority Date :26/03/2012
(33) Name of priority country :EPO
(86) International Application No:PCT/EP2013/056345
Filing Date :26/03/2013
(87) International Publication No :WO 2013/144112
(61) Patent of Addition to Application Number :NA
Filing Date :NA
(62) Divisional to Application Number :NA
Filing Date :NA

(71)**Name of Applicant :**
1)UMICORE AG & CO. KG
Address of Applicant :Rodenbacher Chaussee 4, 63457 Hanau-Wolfgang Germany
(72)**Name of Inventor :**
1)BENDER, Michael

(57) Abstract :
The present application relates to a new contact material methods for the production of said contact material and the use of said contact material.

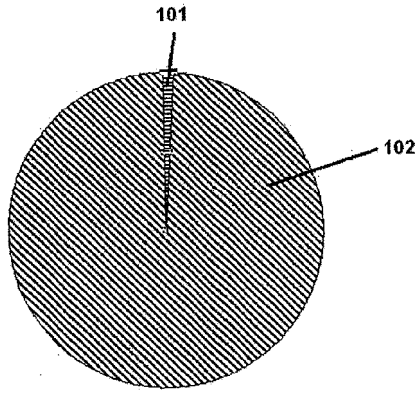

No. of Pages : 16 No. of Claims : 16

(12) PATENT APPLICATION PUBLICATION
(19) INDIA
(22) Date of filing of Application :17/04/2014
(21) Application No.468/KOL/2014 A
(43) Publication Date : 07/11/2014

(54) Title of the invention : DEVICE AND METHOD FOR ASCERTAINING AND MONITORING AN ASSEMBLED COUNTER WEIGHT ON A CRANE

(51) International classification	:B66C 23/00
(31) Priority Document No	:13 166 348.6-1705
(32) Priority Date	:03/05/2013
(33) Name of priority country	:EPO
(86) International Application No	:NA
Filing Date	:NA
(87) International Publication No	: NA
(61) Patent of Addition to Application Number	:NA
Filing Date	:NA
(62) Divisional to Application Number	:NA
Filing Date	:NA

(71)**Name of Applicant :**
1)MANITOWOC CRANE GROUP FRANCE SAS
Address of Applicant :66 CHEMIN DU MOULIN CARRON-C60236, 69574 DARDILLY CEDEX, FRANCE
(72)**Name of Inventor :**
1)ROEBEN DIETER
2)MOHR WALDEMAR
3)TITSCH OLIVER

(57) Abstract :
A device for detecting and monitoring an assembled counterweight on a crane, comprising: a turntable steelwork construction (1) comprising a counterweight cylinder (2); a sensor (7) which is arranged in the region of a connection between the counterweight cylinder (2) and the turntable steelwork construction (1); and a computational unit (8), wherein the sensor (7) is connected to the computational unit (8), and the computational unit (8) comprises a logic which determines a weight of a counterweight which can be connected to the turntable steelwork construction (1) from data which are captured by the sensor (7) and transmitted to the computational unit (8).

No. of Pages : 16 No. of Claims : 15

(12) PATENT APPLICATION PUBLICATION
(19) INDIA
(22) Date of filing of Application :04/08/2014

(21) Application No.1631/KOLNP/2014 A
(43) Publication Date : 07/11/2014

(54) Title of the invention : METHOD FOR CALIBRATING A CURRENT TRANSDUCER OF THE ROGOWSKI TYPE

(51) International classification :G01R15/18
(31) Priority Document No :12002766.9
(32) Priority Date :20/04/2012
(33) Name of priority country :EPO
(86) International Application No :PCT/EP2013/001133
Filing Date :17/04/2013
(87) International Publication No :WO 2013/156153
(61) Patent of Addition to Application Number :NA
Filing Date :NA
(62) Divisional to Application Number :NA
Filing Date :NA

(71)**Name of Applicant :**
1)ABB TECHNOLOGY AG
Address of Applicant :Affolternstr. 44, CH-8050 ZÜrich, SWITZERLAND
(72)**Name of Inventor :**
1)PASCAL, Joris
2)DISSELNKÖTTER, Rolf
3)ZURFLUH, Franz
4)DECK, Bernhard

(57) Abstract :
The invention is about a method for calibrating a current transducer of the Rogowski type, comprising a Rogowski coil sensor and an electronic device, by determining and correcting the sensitivity of the current transducer of the Rogowski type through the measurement of the self-inductance LRCCT of the coil using the electronic device.

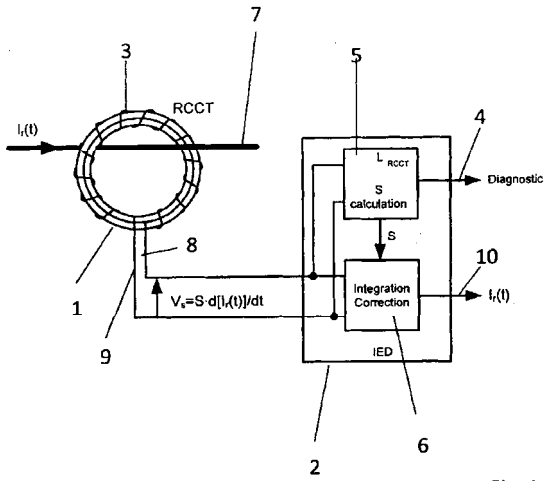

No. of Pages : 18 No. of Claims : 10

(12) PATENT APPLICATION PUBLICATION
(19) INDIA
(22) Date of filing of Application :04/08/2014
(21) Application No.1632/KOLNP/2014 A
(43) Publication Date : 07/11/2014

(54) Title of the invention : DUAL STAGE, ZONE-DELINEATED PYROLYSIS APPARATUS

(51) International classification :C10G1/00
(31) Priority Document No :61/599,206
(32) Priority Date :15/02/2012
(33) Name of priority country :U.S.A.
(86) International Application No :PCT/US2013/026412
Filing Date :15/02/2013
(87) International Publication No :WO 2013/123377
(61) Patent of Addition to Application Number :NA
Filing Date :NA
(62) Divisional to Application Number :NA
Filing Date :NA

(71)**Name of Applicant :**
1)VADXX ENERGY LLC
Address of Applicant :1768 E. 25th Street Cleveland, OH 44114, U.S.A.
(72)**Name of Inventor :**
1)ULLOM, William

(57) Abstract :
An apparatus for continuous conversion of hydro carbonaceous materials to condensable, non-condensable and solid hydrocarbon products, comprising at least one extruder capable of providing shear force and heat and having three or more treatment zones, a continuous process thermal kiln reactor, said extruder and said kiln reactor being in fluid communication, means for transporting hydro carbonaceous materials through the apparatus, and between said extruder and said kiln reactor, means for feeding said hydrocarbonaceous materials to the apparatus, means for heating said hydrocarbonaceous materials, means for removing vapor products from said apparatus, means for removing solid products from said apparatus, and means whereby said hydrocarbonaceous materials are maintained within the zones for a range of defined temperature and residence times, wherein said extruder has at least three zones, and said kiln reactor comprises at least two zones, whereby said hydrocarbonaceous material is subjected to a plurality of defined temperature ranges and residence times.

No. of Pages : 53 No. of Claims : 33

(12) PATENT APPLICATION PUBLICATION
(19) INDIA
(22) Date of filing of Application :14/08/2014
(21) Application No.1706/KOLNP/2014 A
(43) Publication Date : 07/11/2014

(54) Title of the invention : METHODS AND APPARATUS FOR ADAPTIVE RECEIVER DIVERSITY IN A WIRELESS NETWORK

(51) International classification :H04B7/08,H04W52/02
(31) Priority Document No :61/606,311
(32) Priority Date :02/03/2012
(33) Name of priority country :U.S.A.
(86) International Application No :PCT/US2013/028434
Filing Date :28/02/2013
(87) International Publication No :WO 2013/130889
(61) Patent of Addition to Application Number :NA
Filing Date :NA
(62) Divisional to Application Number :NA
Filing Date :NA

(71)**Name of Applicant :**
1)APPLE INC.
Address of Applicant :1 Infinite Loop, Cupertino, CA 95014 U.S.A.
(72)**Name of Inventor :**
1)MUJTABA, Syed, Aon
2)WANG, Xiaowen
3)TABET, Tarik
4)SONG, Kee-bong
5)KIM, Youngjae
6)KIM, Yuchul

(57) Abstract :
Apparatus and methods for implementing intelligent receive diversity management in e.g., a mobile device.. In one implementation, the mobile device includes an LTE-enabied UE, and the intelligent diversity management includes selectively disabling receive diversity (RxD) in that device upon meeting a plurality of criteria including (i) a capacity criterion and (it) a connectivity criterion. In one variant, the capacity criterion includes ensuring that an achievable data rate associated with a single Rx (receive) chain is comparable to that with RxD.

No. of Pages : 57 No. of Claims : 20

(12) PATENT APPLICATION PUBLICATION
(19) INDIA
(22) Date of filing of Application :14/08/2014
(21) Application No.1707/KOLNP/2014 A
(43) Publication Date : 07/11/2014

(54) Title of the invention : APPARATUS AND METHODS FOR A BANDWIDTH EFFICIENT SCHEDULER

(51) International classification :G06F9/50
(31) Priority Document No :13/432,719
(32) Priority Date :28/03/2012
(33) Name of priority country :U.S.A.
(86) International Application No :PCT/US2013/033895
Filing Date :26/03/2013
(87) International Publication No :WO 2013/148698
(61) Patent of Addition to Application Number :NA
Filing Date :NA
(62) Divisional to Application Number :NA
Filing Date :NA

(71)**Name of Applicant :**
1)APPLE INC.
Address of Applicant :1 Infinite Loop, Cupertino, CA 95014 U.S.A.
(72)**Name of Inventor :**
1)MUKHERJEE, Debanjan

(57) Abstract :
Methods and apparatus for scheduling shared time resources. In one embodiment, Bluetooth and IEEE 802.11 interfaces with overlapping frequency ranges are managed by an intelligent scheduler entity or process that schedules time slots for human interaction devices based on predictions on which Bluetooth device is active. By reducing the number of time slots reserved for inactive Bluetooth devices, the scheduler can free up time slots for IEEE 802.11 systems without significant perceptible impact on the Bluetooth devices. The freed time slots can increase in IEEE 802.11 performance by providing additional bandwidth (which can be perceptible by the user), thereby increasing user satisfaction and experience.

No. of Pages : 29 No. of Claims : 27

(12) PATENT APPLICATION PUBLICATION
(19) INDIA
(22) Date of filing of Application :01/05/2013

(21) Application No.496/KOL/2013 A
(43) Publication Date : 07/11/2014

(54) Title of the invention : A VEHICLE MOUNTED SURVEILLANCE SYSTEM FOR TRACKING AND MONITORING THE VEHICLE POSITION AND ITS SURROUNDINGS.

(51) International classification	:A61B 5/00	(71)**Name of Applicant :**
(31) Priority Document No	:NA	**1)INDIAN INSTITUTE OF TECHNOLOGY BHUBANESWAR**
(32) Priority Date	:NA	Address of Applicant :SAMANTAPURI, BHUBANESWAR-751013, ORISSA, INDIA.
(33) Name of priority country	:NA	(72)**Name of Inventor :**
(86) International Application No	:NA	**1)PANIGRAHI, SATYA NARAYAN**
Filing Date	:NA	**2)GHOSH, PARTHA**
(87) International Publication No	: NA	**3)GUPTA, PRAVIR SINGH**
(61) Patent of Addition to Application Number	:NA	
Filing Date	:NA	
(62) Divisional to Application Number	:NA	
Filing Date	:NA	

(57) Abstract :
a vehicle mounted surveillance and reporting system for tracking, monitoring and reporting the vehicle position and condition comprising atleast one imaging device selectively in and/or around the vehicles for capturing vehicle image, a vehicle condition intercepting sensory network comprising plurality of sensors for continuously sensing vehicle condition, a microcontroller unit operatively connected with the sensors for receiving the sensory data and comparing the sensory data with preset threshold value corresponds to a sensory data for a particular vehicle condition to determine the vehicle conditional state, vehicle tracking module for continuously tracking location coordinates of path traveled by the vehicle and communication module for sending selectively the captured vehicle images or videos, the vehicle location and vehicle condition data to a remote data center.

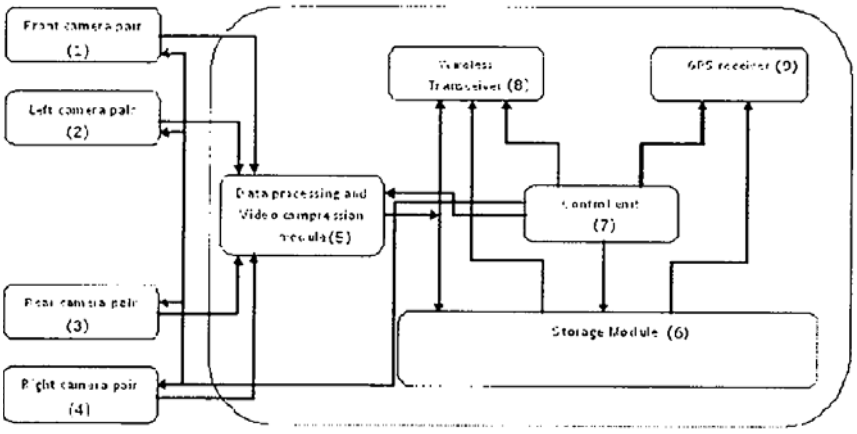

No. of Pages : 33 No. of Claims : 13

(12) PATENT APPLICATION PUBLICATION
(19) INDIA
(22) Date of filing of Application :13/08/2014
(21) Application No.1687/KOLNP/2014 A
(43) Publication Date : 07/11/2014

(54) Title of the invention : WELDING TORCH FOR FIRST ELECTRODE FOR MULTI-ELECTRODE SUBMERGED ARC WELDING AND WELDING METHOD USING SAME

(51) International classification :B23K 9/18
(31) Priority Document No :2012-051090
(32) Priority Date :08/03/2012
(33) Name of priority country :Japan
(86) International Application No :PCT/JP2013/001428
Filing Date :07/03/2013
(87) International Publication No :WO 2013/132855
(61) Patent of Addition to Application Number :NA
Filing Date :NA
(62) Divisional to Application Number :NA
Filing Date :NA

(71)**Name of Applicant :**
1)JFE STEEL CORPORATION
Address of Applicant :2-3,UCHISAIWAI-CHO 2-CHOME, CHIYODA-KU,TOKYO 1000011 Japan
(72)**Name of Inventor :**
1)YOKOTA,TOMOYUKI
2)HAYAKAWA, NAOYA
3)KAWAI, KEIJI
4)YANO,KOJI
5)

(57) Abstract :
The present invention provides a welding technology that allows stable welding even if a thin wire is used as a leading electrode in multiple-electrode submerged arc welding, particularly if welding is performed under welding conditions involving high wire feeding speed, or even if a flux-cored wire is used in which large winding remains after straightening. Provided are a welding torch, for use with a leading electrode in multiple-electrode submerged arc welding, that includes a contact tip, a connector for a power cable, a tube-shaped conductor disposed there between, and means for insulating the tube-shaped conductor from an electrode wire, and a multiple-electrode submerged arc welding method using such a welding torch.

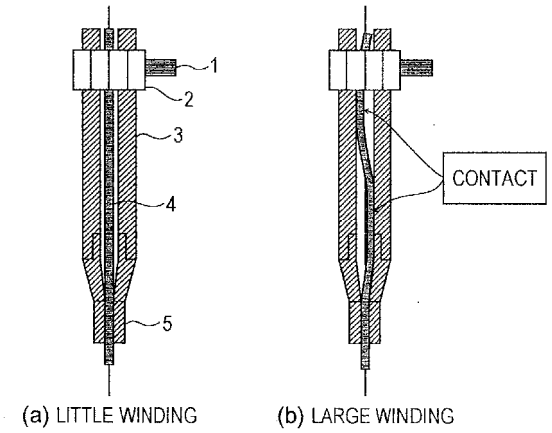

No. of Pages : 26 No. of Claims : 6

(12) PATENT APPLICATION PUBLICATION
(19) INDIA
(22) Date of filing of Application :13/08/2014
(21) Application No.1688/KOLNP/2014 A
(43) Publication Date : 07/11/2014

(54) Title of the invention : ACETOACETYL THERMOSETTING RESIN FOR ZERO VOC GEL COAT

(51) International classification :C09D4/00,C09D133/00
(31) Priority Document No :61/608,760
(32) Priority Date :09/03/2012
(33) Name of priority country :U.S.A.
(86) International Application No :PCT/EP2013/054774
Filing Date :08/03/2013
(87) International Publication No :WO 2013/132077
(61) Patent of Addition to Application Number :NA
Filing Date :NA
(62) Divisional to Application Number :NA
Filing Date :NA

(71)**Name of Applicant :**
1)CCP COMPOSITES US
Address of Applicant :820 East 14th Avenue, North Kansas City, Missouri 64114 U.S.A.
(72)**Name of Inventor :**
1)ZHAO, Ming Yang
2)HSU, Chih-Pin
3)VOEKS, Steven L.
4)LANDTISER, Richard

(57) Abstract :
Zero VOC thermosetting gel coat and laminating resin compositions, and composites and articles, are produced using a multifunctional Michael acceptor, a multifunctional Michael donor and a base catalyst. The obtained low viscosity resin is useful for producing zero VOC gel coats and laminates having excellent curability at ambient temperatures.

No. of Pages : 31 No. of Claims : 30

(12) PATENT APPLICATION PUBLICATION
(19) INDIA
(22) Date of filing of Application :21/08/2014

(21) Application No.1761/KOLNP/2014 A
(43) Publication Date : 07/11/2014

(54) Title of the invention : SYSTEMS AND METHODS FOR REINFORCING A PIPE USING FIBER BUNDLES AND FIBER BUNDLE RIBBON

(51) International classification :F16L55/1645,F16L55/18
(31) Priority Document No :61/600,433
(32) Priority Date :17/02/2012
(33) Name of priority country :U.S.A.
(86) International Application No :PCT/US2013/026308
Filing Date :15/02/2013
(87) International Publication No :WO 2013/123303
(61) Patent of Addition to Application Number :NA
Filing Date :NA
(62) Divisional to Application Number :NA
Filing Date :NA

(71)**Name of Applicant :**
1)FYFE CO. LLC
Address of Applicant :8380 Miralani Drive, San Diego, CA 92126 U.S.A.
(72)**Name of Inventor :**
1)GOODELL, Ryan
2)WISOTZKEY, Sean
3)CARR, Heath
4)FYFE, Edward

(57) Abstract :
Systems and methods for reinforcing a pipe. A robot is adapted for rotating in a pipe to apply resin and/or fiber to an inner surface of a pipe in a generally helical pattern. Application of resin and/or fiber to the pipe may be actively adjusted to achieve desired application. A rate at which the robot moves along the pipe per revolution of the robot can be may be adjustable. A rate at which fiber is advanced toward the inner surface of the pipe may be adjustable for application of the fiber to the inner surface of the pipe in a generally non tensioned state.

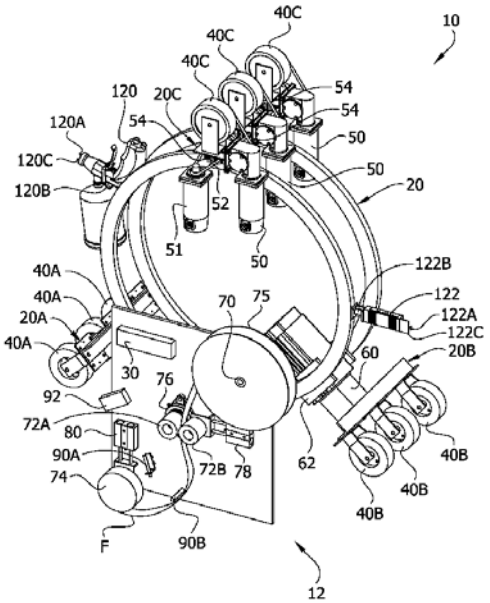

No. of Pages : 22 No. of Claims : 18

(12) PATENT APPLICATION PUBLICATION
(19) INDIA
(22) Date of filing of Application :28/02/2013
(21) Application No.232/KOL/2013 A
(43) Publication Date : 07/11/2014

(54) Title of the invention : PIRFENIDONE COMPOSITIONS FOR EYE DISEASES

(51) International classification :A61K31/44
(31) Priority Document No :NA
(32) Priority Date :NA
(33) Name of priority country :NA
(86) International Application No :NA
Filing Date :NA
(87) International Publication No : NA
(61) Patent of Addition to Application Number :NA
Filing Date :NA
(62) Divisional to Application Number :NA
Filing Date :NA

(71)**Name of Applicant :**
1) WEST BENGAL UNIVERSITY OF ANIMAL & FISHERY SCIENCE
Address of Applicant :37 & 68 KSHUDIRAM BOSE SARANI, KOLKATA-700037, West Bengal India
(72)**Name of Inventor :**
1)DR. SARBANI HAZRA
2)DR. UDAY B. KOMPELLA
3)RUCHIT TRIVEDI

(57) Abstract :
This invention relates to a Pirfenidone composition includingpirfenidone loaded polymeric (e.g., poly lactide-co-glycolide(PLGA) nanoparticles), pirfenidonenano emulsion, and pirfenidonenano suspensionsfor eye drop administration. This invention also relates to a Pirfenidone composition in which pirfenidone nanoparticles but not free pirfenidone significantly ($P<0.05$) reduced corneal haze as well as the time for corneal re-epithelialization following alkali burn, thereby improving corneal wound healing. More particularly, this present invention relates to Pirfenidone composition containing Pirfenidonenano dosage form toprevent fibrosis and Pirfenidone nanoparticles are of potential therapeutic value in treating corneal injuries, other corneal fibrotic diseases, as well as other ocular diseases associated with injury, inflammation, and firbrosis.

No. of Pages : 32 No. of Claims : 16

(12) PATENT APPLICATION PUBLICATION
(19) INDIA
(22) Date of filing of Application :03/05/2013

(21) Application No.509/KOL/2013 A
(43) Publication Date : 07/11/2014

(54) Title of the invention : A PROCESS FOR ENZYMATIC HYDROLYSIS OF CELLULOSIC BIOMASS FOR BIOETHANOL PRODUCTION

(51) International classification	:C12P 7/00	
(31) Priority Document No	:NA	
(32) Priority Date	:NA	
(33) Name of priority country	:NA	
(86) International Application No	:NA	
Filing Date	:NA	
(87) International Publication No	: NA	
(61) Patent of Addition to Application Number	:NA	
Filing Date	:NA	
(62) Divisional to Application Number	:NA	
Filing Date	:NA	

(71)**Name of Applicant :**
1)INDIAN INSTITUTE OF TECHNOLOGY,KHARAGPUR
Address of Applicant :SPONSORED RESEARCH & INDUSTRIAL CONSULTANCY, INDIAN INSTITUTE OF TECHNOLOGY,KHARAGPUR-721302,WEST BENGAL,INDIA
(72)**Name of Inventor :**
1)CHAKRABORTY,DR SAIKAT
2)PAL,RAMENDRA KISHOR

(57) Abstract :
A process for enzymatic hydrolysis of non-edible lignocellulosic biomass including cellulose for bioethanol production is provided wherein mixing the ingredients for selective time, involving mixing for an initial period followed by no mixing for the rest of the reaction period, is surprisingly found to maximize the yields of sugars selected from glucose and reducing sugars from said cellulosic biomass while minimizing energy costs.

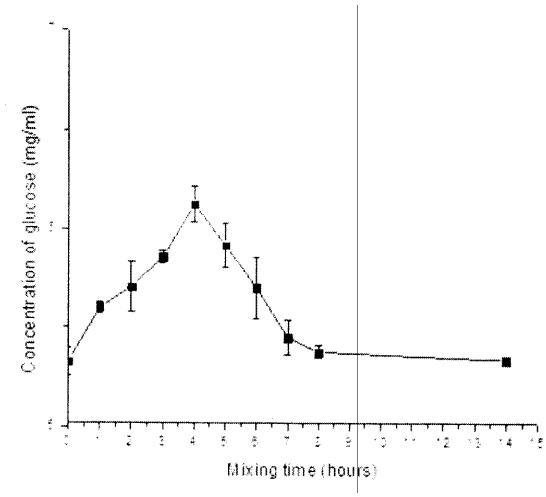

No. of Pages : 13 No. of Claims : 7

(12) PATENT APPLICATION PUBLICATION
(19) INDIA
(22) Date of filing of Application :06/08/2014

(21) Application No.1642/KOLNP/2014 A
(43) Publication Date : 07/11/2014

(54) Title of the invention : PENTOSE FERMENTING MICROORGANISMS

(51) International classification :C12N9/90,C12P7/06,C12P19/24
(31) Priority Document No :12000783.6
(32) Priority Date :07/02/2012
(33) Name of priority country :EPO
(86) International Application No :PCT/EP2013/052407
Filing Date :07/02/2013
(87) International Publication No:WO 2013/117631
(61) Patent of Addition to Application Number :NA
Filing Date :NA
(62) Divisional to Application Number :NA
Filing Date :NA

(71)**Name of Applicant :**
1)CLARIANT PRODUKTE (DEUTSCHLAND) GMBH
Address of Applicant :Brüningstrasse 50, 65929 Frankfurt am Main, Germany
(72)**Name of Inventor :**
1)DRAGOVIC, Zdravko
2)GAMAUF, Christian
3)REISINGER, Christoph
4)KETTLING, Ulrich

(57) Abstract :
The invention provides a microbial eukaryotic cell capable of utilizing C5 sugars, in particular xylose. Another objective of the invention is to provide an improved protein sequence to enable eukaryotic cells to degrade C5 sugars. The present invention thus provides protein comprising an amino acid sequence having at least 75% identity, preferably 80% identity, most preferably 90 % identity, most highly preferably 95 % identity to SEQ ID NO. 2 or SEQ ID NO. 8 and having xylose-isomerase activity in a eukaryotic cell.

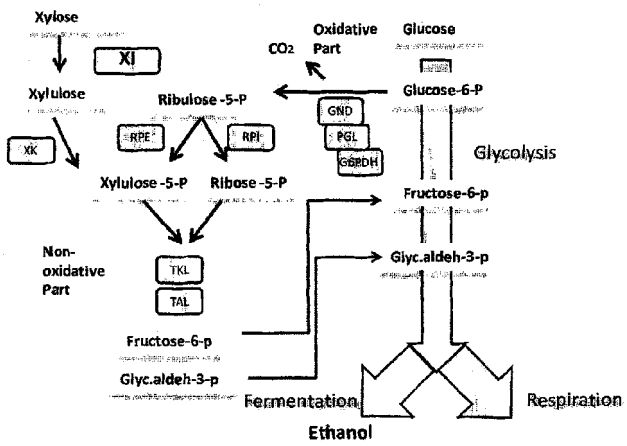

No. of Pages : 43 No. of Claims : 22

(12) PATENT APPLICATION PUBLICATION
(19) INDIA
(22) Date of filing of Application :06/08/2014
(21) Application No.1643/KOLNP/2014 A
(43) Publication Date : 07/11/2014

(54) Title of the invention : SCREWDRIVING TOOL AND TOOL HOLDER FOR SUCH A SCREWDRIVING TOOL

(51) International classification :B23B31/11
(31) Priority Document No :10 2012 100 976.7
(32) Priority Date :07/02/2012
(33) Name of priority country :Germany
(86) International Application No :PCT/EP2013/051243
Filing Date :23/01/2013
(87) International Publication No :WO 2013/117431
(61) Patent of Addition to Application Number :NA
Filing Date :NA
(62) Divisional to Application Number :NA
Filing Date :NA

(71)**Name of Applicant :**
1)FRANZ HAIMER MASCHINENBAU KG
Address of Applicant :Weiherstrasse 21, 86568 Igenhausen, Germany
(72)**Name of Inventor :**
1)Franz HAIMER

(57) Abstract :
The invention relates to a screwdriving tool (1) and to a tool holder (2) for such a screwdriving tool. The screwdriving tool (1) contains a tool head (3) and a tool shank (4) having an outer thread (5) and a supporting region arranged between the tool head (3) and the outer thread (5). According to the invention, the supporting region is formed by two conical bearing faces (6, 8) having different cone angles.

No. of Pages : 20 No. of Claims : 23

(12) PATENT APPLICATION PUBLICATION
(19) INDIA
(22) Date of filing of Application :18/08/2014

(21) Application No.1718/KOLNP/2014 A
(43) Publication Date : 07/11/2014

(54) Title of the invention : REDUCING CARBON DIOXIDE TO PRODUCTS

(51) International classification :C25B3/04
(31) Priority Document No :61/607,240
(32) Priority Date :06/03/2012
(33) Name of priority country :U.S.A.
(86) International Application No :PCT/US2013/029425
Filing Date :06/03/2013
(87) International Publication No :WO 2013/134418
(61) Patent of Addition to Application Number :NA
Filing Date :NA
(62) Divisional to Application Number :NA
Filing Date :NA

(71)**Name of Applicant :**
1)LIQUID LIGHT, INC.
Address of Applicant :11 Deer Park Drive, Suite 121, Monmouth Junction, NJ 08852 U.S.A.
(72)**Name of Inventor :**
1)COLE, Emily, Barton
2)SIVASANKAR, Narayanappa
3)PARAJULI, Rishi
4)KEETS, Kate A.
5)KEYSHAR, Kunttal

(57) Abstract :
A method reducing carbon dioxide to one or more products may include steps (A) to (C). Step (A) may bubble said carbon dioxide into a solution of an electrolyte and a catalyst in a divided electrochemical cell. The divided electrochemical cell may include an anode in a first cell compartment and a cathode in a second cell compartment. The cathode may reduce said carbon dioxide into said products. Step (B) may adjust one or more of (a) a cathode material, (b) a surface morphology of said cathode, (c) said electrolyte, (d) a manner in which said carbon dioxide is bubbled, (e), a pH level of said solution, and (f) an electrical potential of said divided electrochemical cell, to vary at least one of (i) which of said products is produced and (ii) a faradaic yield of said products. Step (C) may separate said products from said solution.

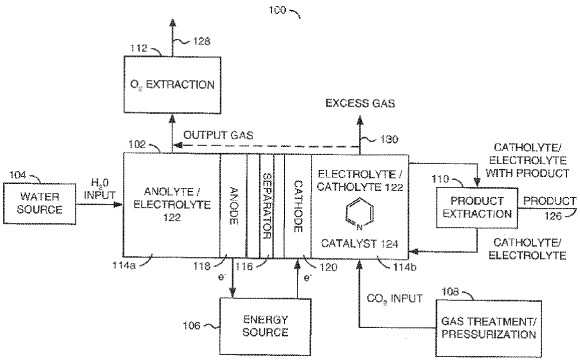

No. of Pages : 51 No. of Claims : 45

(12) PATENT APPLICATION PUBLICATION
(19) INDIA
(22) Date of filing of Application :18/08/2014
(21) Application No.1719/KOLNP/2014 A
(43) Publication Date : 07/11/2014

(54) Title of the invention : METHOD OF VACCINATION AGAINST HUMAN PAPILLOMAVIRUS

(51) International classification :A61K39/12,A61K39/39,A61P31/20
(31) Priority Document No :61/612,345
(32) Priority Date :18/03/2012
(33) Name of priority country:U.S.A.
(86) International Application No :PCT/EP2013/055582
Filing Date :18/03/2013
(87) International Publication No :WO 2013/139744
(61) Patent of Addition to Application Number :NA
Filing Date :NA
(62) Divisional to Application Number :NA
Filing Date :NA

(71)**Name of Applicant :**
1)GLAXOSMITHKLINE BIOLOGICALS S.A.
Address of Applicant :rue de L'Institut 89, B-1330 Rixensart BELGIUM
(72)**Name of Inventor :**
1)COLAU, Brigitte, Desiree, Alberte
2)GIANNINI, Sandra
3)LOCKMAN, Laurence

(57) Abstract :
The disclosure provides immunogenic compositions comprising HPV VLPs from one or more HPV types in combination with an adjuvant comprising a TLR agonist for use in a method for the prevention of HPV infection or disease in an individual, wherein a first dose of the immunogenic composition comprising HPV VLPs and a TLR agonist, is administered followed by a second dose of an immunogenic composition comprising HPV VLPs from one or more HPV types but which does not comprise a TLR agonist.

No. of Pages : 70 No. of Claims : 34

(12) PATENT APPLICATION PUBLICATION
(19) INDIA
(22) Date of filing of Application :13/01/2012

(21) Application No.83/KOLNP/2012 A
(43) Publication Date : 07/11/2014

(54) Title of the invention : CRYPTOGRAPHY ON A ELLIPTICAL CURVE

(51) International classification :H04L9
(31) Priority Document No :09 54053
(32) Priority Date :16/06/2009
(33) Name of priority country :France
(86) International Application No :PCT/FR2010/05190
Filing Date :15/06/2010
(87) International Publication No :WO/2010/146302
(61) Patent of Addition to Application Number :NA
Filing Date :NA
(62) Divisional to Application Number :NA
Filing Date :NA

(71)**Name of Applicant :**
1)MORPHO
Address of Applicant :27 rue Leblanc F-75015 Paris FRANCE
(72)**Name of Inventor :**
1)ICART Thomas
2)CORON Jean-Sébastien

(57) Abstract :
A cryptographic calculation is performed in an electronic component comprising the step of obtaining a point P(X Y) from a parameter t on an elliptical curve of equation: Y2 = f(X); and from polynomials X1(t) X2(t) X3(t) and U(t) satisfying the equality: f(X1(t)).f(X2(t)).f(X3(t))=U(t)2 in Fq with q = 3 mod 4. Firstly a value of the parameter t is obtained. Next the point P is determined by carrying out the following substeps: (i) X1= X1(t) X2= X2(t) X3= X3(t) and U=U(t) are calculated; (ii) if the term f(X1).f(X2) is a square then it is tested whether the term f(X3) is a square in Fq and if so the square root of f(X3) is calculated in order to obtain the point P(X3); (iii) otherwise it is tested whether the term $f(X_1)$ is a square and, if so, the square root of $f(X_1)$ is calculated, in order to obtain the point $P(X_{1,})$; (iv) otherwise, the square root of $f(X_2)$ is calculated in order to obtain the point $P(X_2)$. This point P can then be used in a cryptographic application..

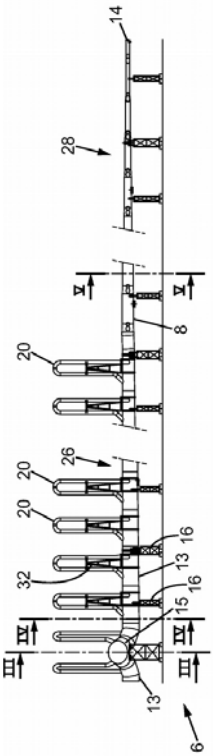

No. of Pages : 28 No. of Claims : 8

(12) PATENT APPLICATION PUBLICATION
(19) INDIA
(22) Date of filing of Application :11/01/2012
(21) Application No.63/KOLNP/2012 A
(43) Publication Date : 07/11/2014

(54) Title of the invention : UPLINK HYBRID AUTOMATIC REPEAT REQUEST METHOD AND DEVICE IN A TRANSPARENT RELAY NETWORK

(51) International classification :H04W24/04
(31) Priority Document No :200910110719.X
(32) Priority Date :29/09/2009
(33) Name of priority country :China
(86) International Application No :PCT/CN2010/077132
Filing Date :20/09/2010
(87) International Publication No :WO/2011/038648
(61) Patent of Addition to Application Number :NA
Filing Date :NA
(62) Divisional to Application Number :NA
Filing Date :NA

(71)**Name of Applicant :**
1)HUAWEI TECHNOLOGIES CO. LTD.
Address of Applicant :Huawei Administration Building Bantian Longgang District Shenzhen Guangdong 518129 P.R. China
(72)**Name of Inventor :**
1)QIAN Li;

(57) Abstract :
An uplink Hybrid Automatic Repeat reQuest (HARQ) method in a transparent relay network is provided according to embodiments of the present invention, which includes: a relay station intercepts and decodes uplink data sent from a mobile terminal to a base station; the relay station judges whether decoding of the uplink data is successful; when the relay station judges that the decoding of the uplink data is successful, the relay station sends acknowledgment response information to the base station to notify the base station that the relay station has received the uplink data successfully, and sends the acknowledgment response information to the mobile terminal when the base station does not decode the uplink data successfully; when the relay station judges that the decoding of the uplink data is successful and receives negative-acknowledgment information returned by the base station to the relay station, the relay station sends the intercepted uplink data to the base station, where the negative-acknowledgment information represents that the base station does not successfully decode the uplink data sent from the mobile terminal to the base station. Therefore, embodiments of the present invention can reduce power consumption of the mobile terminal.

No. of Pages : 30 No. of Claims : 13

(12) PATENT APPLICATION PUBLICATION
(19) INDIA
(22) Date of filing of Application :29/03/2012
(21) Application No.777/KOLNP/2012 A
(43) Publication Date : 07/11/2014

(54) Title of the invention : CONTROLLED SEED WETTING

(51) International classification :A01C1/02
(31) Priority Document No :09169547.8
(32) Priority Date :04/09/2009
(33) Name of priority country :EPO
(86) International Application No :PCT/NL2010/050554
Filing Date :03/09/2010
(87) International Publication No :WO/2011/028115
(61) Patent of Addition to Application Number :NA
Filing Date :NA
(62) Divisional to Application Number :NA
Filing Date :NA

(71)**Name of Applicant :**
1)INCOTEC INTERNATIONAL B.V.
Address of Applicant :Westeinde 107 1601 BL Enkhuizen The Netherlands
(72)**Name of Inventor :**
1)LEGRO Robert Jean
2)TETTEROO Fransiscus Abraham Antonius
3)KLEMANN Paulus Ludovicus Servatius

(57) Abstract :
The invention is directed to a method for preparing a coated seed and to a coated seed obtainable by said method. The method of the invention comprises providing a non-germinated seed and a) coating said seed with a coating composition comprising one or more binders and one or more active ingredients; and b) wetting said seed in a liquid, said liquid comprising an amount of water sufficient to induce germination, wherein said amount of water is such that essentially all the water is absorbed by the seed prior to germination of said seed.

No. of Pages : 22 No. of Claims : 15

(12) PATENT APPLICATION PUBLICATION
(19) INDIA
(22) Date of filing of Application :08/08/2014
(21) Application No.1653/KOLNP/2014 A
(43) Publication Date : 07/11/2014

(54) Title of the invention : METHOD AND APPARATUS FOR GENERATING AND TRANSMITTING CODE SEQUENCE IN A WIRELESS COMMUNICATION SYSTEM

(51) International classification :H04L 27/26
(31) Priority Document No :10-2005-0114306
(32) Priority Date :28/11/2005
(33) Name of priority country :Republic of Korea
(86) International Application No :PCT/KR2006/005060
Filing Date :28/11/2006
(87) International Publication No :WO 2007/061272
(61) Patent of Addition to Application Number :NA
Filing Date :NA
(62) Divisional to Application Number :1896/KOLNP/2008
Filed on :12/05/2008

(71)**Name of Applicant :**
1)TQ LAMBDA LLC
Address of Applicant :805 LAS CIMAS PARKWAY, SUITE 240, AUSTIN, TX 78746 U.S.A.
(72)**Name of Inventor :**
1)HAN, Seung Hee
2)NOH, Min Seok
3)KWON, Yeon Hyeon
4)PARK, Hyun Hwa
5)LEE, Hyun Woo
6)KIM, Dong Cheol

(57) Abstract :
A method of generating a code sequence in a wireless communication system is disclosed. More specifically, the method includes recognizing a desired length of the code sequence, generating a code sequence having a length different from the desired length, and modifying the length of the generated code sequence to equal the desired length. Here, the step of modifying includes discarding at least one element of the generated code sequence or inserting at least one null element to the generated code sequence.

No. of Pages : 57 No. of Claims : 23

(12) PATENT APPLICATION PUBLICATION
(19) INDIA
(22) Date of filing of Application :08/08/2014
(21) Application No.1654/KOLNP/2014 A
(43) Publication Date : 07/11/2014

(54) Title of the invention : FERRITIC STAINLESS STEEL

(51) International classification :C22C38/00,C22C38/50,C22C38/60
(31) Priority Document No :2012-055308
(32) Priority Date :13/03/2012
(33) Name of priority country :Japan
(86) International Application No :PCT/JP2013/001462
Filing Date :07/03/2013
(87) International Publication No :WO 2013/136736
(61) Patent of Addition to Application Number :NA
Filing Date :NA
(62) Divisional to Application Number :NA
Filing Date :NA

(71)**Name of Applicant :**
1)JFE STEEL CORPORATION
Address of Applicant :2-3, Uchisaiwai-cho 2-chome, Chiyoda-ku, Tokyo 100-0011 Japan
(72)**Name of Inventor :**
1)Takashi SAMUKAWA
2)Kunio FUKUDA
3)Masataka YOSHINO
4)Hiroki OTA
5)Hiroyuki OGATA

(57) Abstract :
A ferritic stainless steel having excellent surface properties and corrosion resistance in welds with austenitic stainless steel is provided. The ferritic stainless steel is characterized by containing, in mass%, 0.003 to 0.015% carbon, 0.05 to 0.30% silicon, 0.10 to 0.35% manganese, not more than 0.06% phosphorus, not more than 0.02% sulfur, 17.0 to 19.0% chromium, more than 0.10% to 0.30% nickel, 0.10 to 0.40% titanium, 0.005% to less than 0.050% niobium, less than 0.20% molybdenum, 0.005 to 0.015% nitrogen, 0.30 to 0.50% copper, and less than 0.0005% magnesium, with the remainder comprising iron and incidental impurities.

No. of Pages : 51 No. of Claims : 5

(12) PATENT APPLICATION PUBLICATION
(19) INDIA
(22) Date of filing of Application :13/01/2012
(21) Application No.69/KOLNP/2012 A
(43) Publication Date : 07/11/2014

(54) Title of the invention : DIELECTRIC RESONATOR ROD AND METHOD IN A RADIO FREQUENCY FILTER

(51) International classification :H01P1/20
(31) Priority Document No :NA
(32) Priority Date :NA
(33) Name of priority country :NA
(86) International Application No :PCT/SE2009/050760
Filing Date :17/06/2009
(87) International Publication No :WO/2010/147523
(61) Patent of Addition to Application Number :NA
Filing Date :NA
(62) Divisional to Application Number :NA
Filing Date :NA

(71)**Name of Applicant :**
1)TELEFONAKTIEBOLAGET LM ERICSSON (publ)
Address of Applicant :SE-164 83 Stockholm SWEDEN
(72)**Name of Inventor :**
1)ZHU Mafeng;
2)ZHANG Yan;

(57) Abstract :
The invention relates to a dielectric resonator rod in a transverse magnetic mode radio frequency filter comprising a first cylindrical end part (10) of a first diameter (D1) and a second cylindrical end part (20) of a second diameter (D2). The first diameter is different than the second diameter and the first cylindrical end part (10) is connected via a third intermediate part (30) to the second cylindrical end part (20). The third intermediate part (30) comprises a tapered outer circumferential surface connecting the first cylindrical end part (10) to the second cylindrical end part (20).

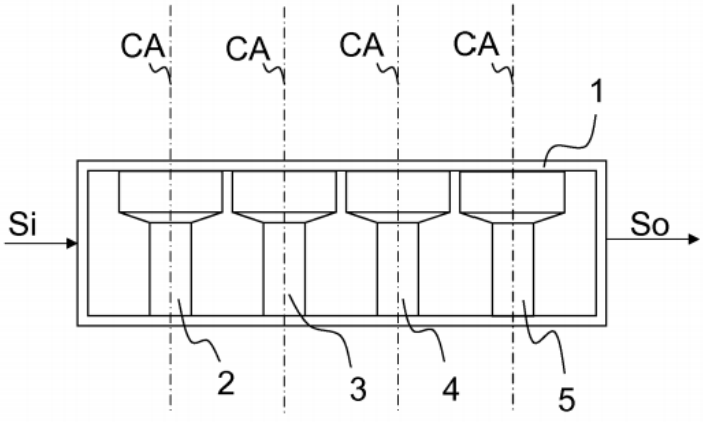

No. of Pages : 18 No. of Claims : 10

(12) PATENT APPLICATION PUBLICATION
(19) INDIA
(22) Date of filing of Application :19/08/2014
(21) Application No.1737/KOLNP/2014 A
(43) Publication Date : 07/11/2014

(54) Title of the invention : MULTI-STAGE AERATION APPARATUS

(51) International classification :B01F3/04,B01F5/00,C02F1/74
(31) Priority Document No :61/592,689
(32) Priority Date :31/01/2012
(33) Name of priority country :U.S.A.
(86) International Application No :PCT/CA2013/050077
Filing Date :31/01/2013
(87) International Publication No :WO 2013/113123
(61) Patent of Addition to Application Number :NA
Filing Date :NA
(62) Divisional to Application Number :NA
Filing Date :NA

(71)**Name of Applicant :**
1)SEAIR INC.
Address of Applicant :PO Box 3329 Stn Main, Spruce Grove, Alberta T7X 3A6 CANADA
(72)**Name of Inventor :**
1)GREENE, Kyle
2)WEBB, Todd

(57) Abstract :
A multi-stage aeration apparatus includes at least two vertically oriented aeration modules. Each aeration module defines a vertically elongated aeration chamber having a top inlet and a bottom outlet. The bottom outlet of each of the aeration modules feeds a fluid stream comprising liquid and gas into the top inlet of an underlying one of the aeration modules. Each aeration module has an aeration head connected to the top inlet, such that the fluid stream passing through the top inlet into the aeration chamber must pass through the aeration head, the aeration head aerating the liquid with the gas in the fluid stream.

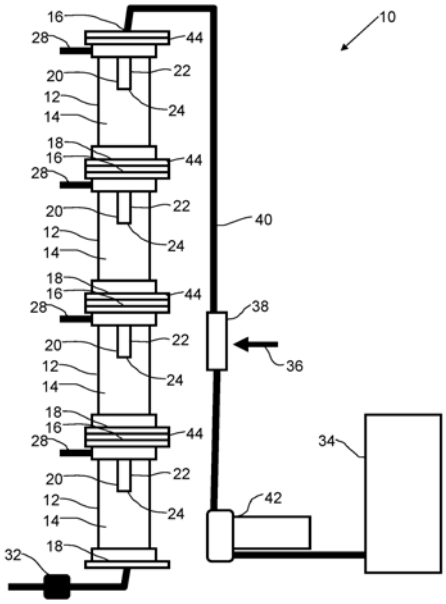

No. of Pages : 15 No. of Claims : 15

(12) PATENT APPLICATION PUBLICATION
(19) INDIA
(22) Date of filing of Application :19/08/2014

(21) Application No.1738/KOLNP/2014 A
(43) Publication Date : 07/11/2014

(54) Title of the invention : USING BAR-CODES IN AN ASSET STORAGE AND TRANSFER SYSTEM

(51) International classification :G06Q20/08,G06K9/18,G06Q20/20
(31) Priority Document No :61/612,770
(32) Priority Date :19/03/2012
(33) Name of priority country :U.S.A.
(86) International Application No :PCT/CA2013/050222
Filing Date :18/03/2013
(87) International Publication No :WO 2013/138932
(61) Patent of Addition to Application Number :NA
Filing Date :NA
(62) Divisional to Application Number :NA
Filing Date :NA

(71)**Name of Applicant :**
1)ROYAL CANADIAN MINT/ MONNAIE ROYALE CANADIENNE
Address of Applicant :320 Sussex Drive, Ottawa, Ontario K1A 0G8 CANADA
(72)**Name of Inventor :**
1)EVERETT, David

(57) Abstract :
A secure asset storage and transfer system. A first display displays a first bar code encoding a request message including an asset value amount to be transferred. A first camera-equipped device is configured for: reading the first bar code, decoding the first bar code to recover the request message; generating a value transfer message for transferring asset value amount to be transferred from a storage medium associated with the camera-equipped device; encoding the value transfer message to generate a corresponding second bar code; and displaying the second bar code on a second display. A second camera-equipped device is configured for reading the second bar code, and decoding the second bar code to recover the value transfer message.

No. of Pages : 16 No. of Claims : 13

(12) PATENT APPLICATION PUBLICATION
(19) INDIA
(22) Date of filing of Application :12/01/2012
(21) Application No.68/KOLNP/2012 A
(43) Publication Date : 07/11/2014

(54) Title of the invention : SHEAR RESISTANT EXCAVATION COMPONENT

(51) International classification :B65G15
(31) Priority Document No :61/225,132
(32) Priority Date :13/07/2009
(33) Name of priority country :U.S.A.
(86) International Application No :PCT/US2010/041703
Filing Date :12/07/2010
(87) International Publication No :WO/2011/008694
(61) Patent of Addition to Application Number :NA
Filing Date :NA
(62) Divisional to Application Number :NA
Filing Date :NA

(71)**Name of Applicant :**
1)VERMEER MANUFACTURING COMPANY
Address of Applicant :1210 Vermeer Road East Pella Iowa 50219-0200 U.S.A.
(72)**Name of Inventor :**
1)COOPER Mark
2)DESCHAMP Derrick
3)FLAHIVE Jeff
4)HAWKS Dan
5)MEINDERS Glenn
6)VANDER HART Michael

(57) Abstract :
An excavation component is disclosed herein. The excavation component includes a cutter structure carrier and a cutter structure carried by the cutter structure carrier. The excavation component also includes a fastener for securing the cutter structure to the cutter structure carrier. The cutter structure carrier and the cutter structure have an interlocking geometry for transferring shear between the cutter structure carrier and the cutter structure so as to reduce an amount of shear applied to the fastener during excavation operations.

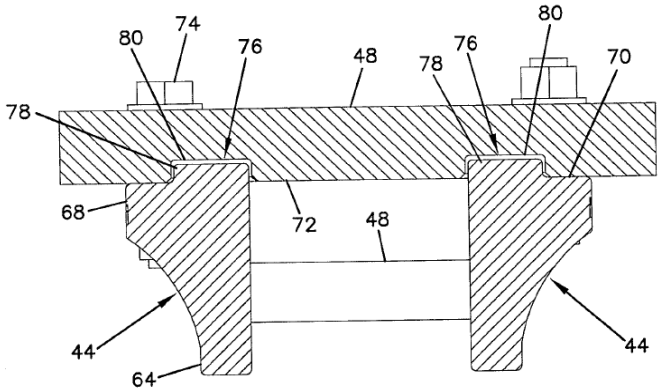

No. of Pages : 24 No. of Claims : 17

(12) PATENT APPLICATION PUBLICATION
(19) INDIA
(22) Date of filing of Application :19/08/2014

(21) Application No.1732/KOLNP/2014 A
(43) Publication Date : 07/11/2014

(54) Title of the invention : EXTERNAL LOG STORAGE IN AN ASSET STORAGE AND TRANSFER SYSTEM

(51) International classification :G06Q20/10,G06F21/78
(31) Priority Document No :61/612,783
(32) Priority Date :19/03/2012
(33) Name of priority country :U.S.A.
(86) International Application No :PCT/CA2013/050224
Filing Date :18/03/2013
(87) International Publication No :WO 2013/138934
(61) Patent of Addition to Application Number :NA
Filing Date :NA
(62) Divisional to Application Number :NA
Filing Date :NA

(71)**Name of Applicant :**
1)ROYAL CANADIAN MINT/MONNAIE ROYALE CANADIENNE
Address of Applicant :320 Sussex Drive, Ottawa, Ontario K1A 0G8 CANADA
(72)**Name of Inventor :**
1)EVERETT, David

(57) Abstract :
A secure asset storage media. A secure module includes a memory storing at least a DuplicateCounter and a Hash-Log, the HashLog comprising a respective hash of each value transfer message sent or received by the secure asset storage media, the DuplicateCounter storing a count of duplicate hash values in the HashLog. A non-volatile memory is disposed external to the secure module. The non-volatile memory stores a transaction log comprising a copy of each value transfer message sent or received by the secure asset storage media and its respective hash value. A controller is configured to control communication between the secure module and the non-volatile memory to record information of a received value transfer message in the secure module and the transaction log.

No. of Pages : 15 No. of Claims : 5

(12) PATENT APPLICATION PUBLICATION
(19) INDIA
(22) Date of filing of Application :19/08/2014

(21) Application No.1733/KOLNP/2014 A
(43) Publication Date : 07/11/2014

(54) Title of the invention : AUTOMATED FOREX FUNCTION IN AN ASSET STORAGE AND TRANSFER SYSTEM

(51) International classification	:G06Q20/08,G06Q20/10,G06Q40/04
(31) Priority Document No	:61/612,779
(32) Priority Date	:19/03/2012
(33) Name of priority country	:U.S.A.
(86) International Application No	:PCT/CA2013/050223
Filing Date	:18/03/2013
(87) International Publication No	:WO 2013/138933
(61) Patent of Addition to Application Number	:NA
Filing Date	:NA
(62) Divisional to Application Number	:NA
Filing Date	:NA

(71)**Name of Applicant :**
1)ROYAL CANADIAN MINT/MONNAIE ROYALE CANADIENNE
Address of Applicant :320 Sussex Drive, Ottawa, Ontario K1A 0G8 CANADA
(72)**Name of Inventor :**
1)EVERETT, David

(57) Abstract :
A method of transferring asset value between a first storage media for storing and transferring asset value denominated in a first currency and a second storage media for storing and transferring asset value denominated in a second currency. A FOREX system includes a third storage media for storing and transferring asset value denominated in the first currency and a fourth storage media for storing and transferring asset value denominated in the second currency. A first asset value amount, denominated in the second currency, to be transferred to the second storage media is determined. The FOREX system determines a third asset value amount denominated in the first currency, based on a second asset value amount denominated in the second currency. The first storage media transfers the third asset value amount to the third storage media, and the fourth storage media transfers the second asset value amount to the second storage media.

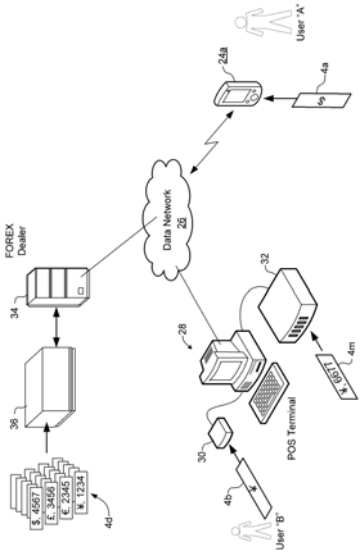

No. of Pages : 22 No. of Claims : 14

(12) PATENT APPLICATION PUBLICATION
(19) INDIA
(22) Date of filing of Application :19/08/2014
(21) Application No.1734/KOLNP/2014 A
(43) Publication Date : 07/11/2014

(54) Title of the invention : SYSTEM AND METHOD FOR EFFICIENT OPERATION OF CELLULAR COMMUNICATION NETWORKS

(51) International classification :H04M11/04,H04W4/00,H04W24/00
(31) Priority Document No :61/612,889
(32) Priority Date :19/03/2012
(33) Name of priority country :U.S.A.
(86) International Application No :PCT/US2013/030001
Filing Date :08/03/2013
(87) International Publication No :WO 2013/142103
(61) Patent of Addition to Application Number :NA
Filing Date :NA
(62) Divisional to Application Number :NA
Filing Date :NA

(71)**Name of Applicant :**
1)SINGHAL, Tara, Chand
Address of Applicant :P.O. Box 5075, Torrance, CA 90510 U.S.A.
(72)**Name of Inventor :**
1)SINGHAL, Tara, Chand

(57) Abstract :
A cellular communication network has a mobile switching center (MSC) that maintains a GPS location data of a mobile handset referenced by a mobile identification number (MIN) and an electronic serial number (ESN) in addition to a geographic cell number in an HLR database for handsets operating in the network. The GPS location data of the handset may be used for efficient paging to a specific cell to route incoming calls to the handset, route emergency responder calls with the physical location of the handset and to program the handset with the handset transmission strength to the nearest cell tower In lieu of using triangulation algorithm.

No. of Pages : 52 No. of Claims : 20

(12) PATENT APPLICATION PUBLICATION
(19) INDIA
(22) Date of filing of Application :03/05/2013
(21) Application No.508/KOL/2013 A
(43) Publication Date : 07/11/2014

(54) Title of the invention : PYRROLE-BASED DIPHOSPHINES AND THEIR OXIDIZED PRODUCTS

(51) International classification	:C07F15/00, B01J31/00
(31) Priority Document No	:NA
(32) Priority Date	:NA
(33) Name of priority country	:NA
(86) International Application No	:NA
Filing Date	:NA
(87) International Publication No	: NA
(61) Patent of Addition to Application Number	:NA
Filing Date	:NA
(62) Divisional to Application Number	:NA
Filing Date	:NA

(71)**Name of Applicant :**
1)INDIAN INSTITUTE OF TECHNOLOGY,KHARAGPUR
Address of Applicant :SPONSORED RESEARCH & INDUSTRIAL CONSULTANCY, INDIAN INSTITUTE OF TECHNOLOGY, KHARAGPUR-721302, WEST BENGAL, INDIA.
(72)**Name of Inventor :**
1)MANI,GANESAN
2)KUMAR,SHANISH

(57) Abstract :
Pincer/multidentate ligands are provided comprising pyrrole based ligands involving N and/or P donor atoms of the types NNN, NNNN, PNP, PNNNP and a process for the synthesis thereof comprising pyrrole ring based central atom that are further phosphoryl or thiophosphoryl derivatized favouring O or S as donor atoms and the pincer/multidentate ligand of the types ONO, SNS, ONNO, SNNS. The process of synthesis to achieve said compounds from amine compounds are also provided advantageously involving minimum steps while giving maximum yields and free of any air sensitive reagents.

No. of Pages : 22 No. of Claims : 12

(12) PATENT APPLICATION PUBLICATION
(19) INDIA
(22) Date of filing of Application :14/08/2014

(21) Application No.1698/KOLNP/2014 A
(43) Publication Date : 07/11/2014

(54) Title of the invention : CALIPER BRAKE APPARATUS

(51) International classification :F16D 65/18
(31) Priority Document No :2012-22693
(32) Priority Date :06/02/2012
(33) Name of priority country :Japan
(86) International Application No :PCT/JP2012/080890
Filing Date :29/11/2012
(87) International Publication No :WO 2013/118375
(61) Patent of Addition to Application Number :NA
Filing Date :NA
(62) Divisional to Application Number :NA
Filing Date :NA

(71)**Name of Applicant :**
1)KAYABA INDUSTRY CO., LTD.
Address of Applicant :WORLD TRADE CENTER BLDG., 4-1, HAMAMATSU-CHO 2-CHOME, MINATO-KU,TOKYO 1056111 Japan
(72)**Name of Inventor :**
1)TSUTOMU SUZUKI
2)YOSHIYUKI OOKAWARA

(57) Abstract :
A caliper brake apparatus includes a brake lining that advances/retreats relative to a caliper main body supported on a vehicle body and can apply a frictional force by slidingly contacting a disc, an anchor pin that supports a guide plate supporting the brake lining on the caliper main body such that it can freely advance/retreat, a piston that advances/retreats relative to the caliper main body and can press the brake lining via the guide plate, a diaphragm that abuts a rear surface of the piston and defines a pressure chamber within the caliper main body and elastically deforms due to pressure of compressed air within the pressure chamber so as to move the piston, and a piston plate that supports the piston on the anchor pin such that the piston can freely slide. The piston includes a plurality of thermal insulation members whose distal ends protrude toward the guide plate.

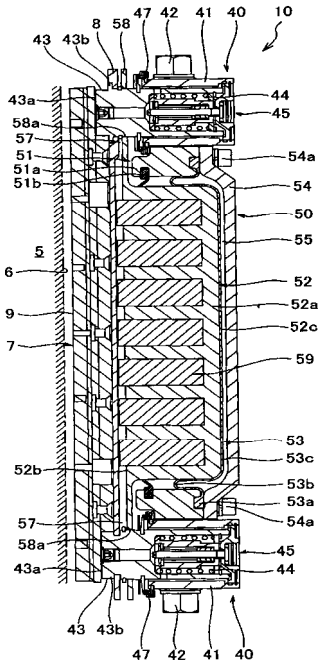

No. of Pages : 25 No. of Claims : 10

(12) PATENT APPLICATION PUBLICATION
(19) INDIA
(22) Date of filing of Application :22/08/2014
(21) Application No.1778/KOLNP/2014 A
(43) Publication Date : 07/11/2014

(54) Title of the invention : DAMPENING ASSEMBLY AND RELATED METHOD OF MAKING SAME

(51) International classification :F16F15/14,F16F1/38
(31) Priority Document No :61/637,438
(32) Priority Date :24/04/2012
(33) Name of priority country :U.S.A.
(86) International Application No :PCT/US2013/037761
Filing Date :23/04/2013
(87) International Publication No :WO 2013/163156
(61) Patent of Addition to Application Number :NA
Filing Date :NA
(62) Divisional to Application Number :NA
Filing Date :NA

(71)**Name of Applicant :**
1)GKN SINTER METALS, LLC
Address of Applicant :3300 University Drive, Auburn Hills, MI 48326 U.S.A.
(72)**Name of Inventor :**
1)MANDEL, Joel, H.
2)COOPER, Donald, P.
3)MOHR, John, P.

(57) Abstract :
An assembly comprising: a powder metal outer part (22) having a radially inward facing cylindrical surface (54) with a plurality of facets (52) formed thereon that, in an alternating fashion, extend in an axial direction from an axial side of the powder metal outer part toward an opposite axial side of the powder metal outer part to a position between the opposing axial sides of the powder metal outer part; a powder metal inner part (20) having a radially outward facing cylindrical surface with a plurality of facets formed thereon that, in an alternating fashion, extend in an axial direction from an axial side of the powder metal inner part toward an opposite axial side of the powder metal inner part to a position between the opposing axial sides of the powder metal inner part; and an intermediate component (26) disposed between the cylindrical surfaces of the powder metal outer part and the powder metal inner part that connects the powder metal outer part and the powder metal inner part together.

No. of Pages : 35 No. of Claims : 36

(12) PATENT APPLICATION PUBLICATION
(19) INDIA
(22) Date of filing of Application :22/08/2014

(21) Application No.1779/KOLNP/2014 A
(43) Publication Date : 07/11/2014

(54) Title of the invention : ADJUVANTED FORMULATIONS OF RABIES VIRUS IMMUNOGENS

(51) International classification :A61K39/395,C07D471/04,C07D487/04
(31) Priority Document No :61/607,975
(32) Priority Date :07/03/2012
(33) Name of priority country :U.S.A.
(86) International Application No :PCT/EP2013/054547
Filing Date :07/03/2013
(87) International Publication No :WO 2013/131984
(61) Patent of Addition to Application Number :NA
Filing Date :NA
(62) Divisional to Application Number :NA
Filing Date :NA

(71)**Name of Applicant :**
1)NOVARTIS AG
Address of Applicant :Lichtstrasse 35, CH-4056 Basel SWITZERLAND
(72)**Name of Inventor :**
1)JAIN, Siddhartha
2)O'HAGAN, Derek
3)SINGH, Manmohan

(57) Abstract :
The efficacy of rabies vaccines can be enhanced by adjuvanting rabies virus immunogens with a mixture of a TLR agonist (preferably a TLR7 agonist) and an insoluble metal salt (preferably an aluminium salt). The TLR agonist is typically adsorbed to the metal salt. The rabies virus immunogen can also be adsorbed to the metal salt.

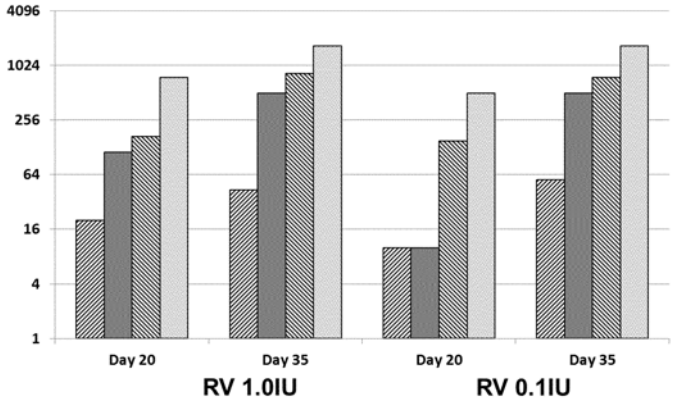

No. of Pages : 47 No. of Claims : 32

(12) PATENT APPLICATION PUBLICATION
(19) INDIA
(22) Date of filing of Application :14/08/2014
(21) Application No.1704/KOLNP/2014 A
(43) Publication Date : 07/11/2014

(54) Title of the invention : ELECTRIC APPARATUS USING EDDY CURRENT GENERATION FOR TRANSMITTING TORQUE BETWEEN TWO ADJACENT ROTORS

(51) International classification :H02K16/02,H02K1/27
(31) Priority Document No :61/588,777
(32) Priority Date :20/01/2012
(33) Name of priority country :U.S.A.
(86) International Application No :PCT/CA2013/000052
Filing Date :18/01/2013
(87) International Publication No :WO 2013/106919
(61) Patent of Addition to Application Number :NA
Filing Date :NA
(62) Divisional to Application Number :NA
Filing Date :NA

(71)**Name of Applicant :**
1)IDÅNERGIE INC.
Address of Applicant :Bureau C-1260, 400 rue Montfort, Montréal, Québec H3C 4J9 CANADA
(72)**Name of Inventor :**
1)BLANCHET, Pierre
2)TROTTIER, Gilles

(57) Abstract :
An electric apparatus comprises a stator having an array of coils positioned within its periphery and a first rotor having an array of magnet pairs positioned within its periphery. The first rotor has one face adjacent to the stator. A second rotor made of conductive material is positioned adjacent to another face of the first rotor. A coupling mechanism may be connected to the second rotor. The electric apparatus may be connected to an electric power source and act as a motor for driving a mechanical load attached to the coupling mechanism. The electric apparatus may alternatively be connected to an electric load, a turbine being attached to the coupling mechanism for generating electric power. An enclosure may protect components of the electric apparatus against external elements, for example to allow underwater operation.

No. of Pages : 45 No. of Claims : 29

(12) PATENT APPLICATION PUBLICATION
(19) INDIA
(22) Date of filing of Application :14/08/2014
(21) Application No.1705/KOLNP/2014 A
(43) Publication Date : 07/11/2014

(54) Title of the invention : PARTIALLY DEPOLYMERIZED GLYCOSAMINOGLYCAN SILVER AND GOLD SALTS

(51) International classification :C08B37/00
(31) Priority Document No :P 201230247
(32) Priority Date :17/02/2012
(33) Name of priority country :Spain
(86) International Application No :PCT/EP2013/053087
Filing Date :15/02/2013
(87) International Publication No :WO 2013/121001
(61) Patent of Addition to Application Number :NA
Filing Date :NA
(62) Divisional to Application Number :NA
Filing Date :NA

(71)**Name of Applicant :**
1)KIMFLEXOR, S.L.
Address of Applicant :Avda. Puig i Cadafalch, 48, ca24, E-08303 Mataró SPAIN
(72)**Name of Inventor :**
1)FLORES I SALGADO, Francesc
2)BENÍTEZ JIMÉNEZ, Antonio Francisco
3)COSTA I RIEROLA, Margarita
4)FLORES I COSTA, Roger
5)FLORES I COSTA, Laia

(57) Abstract :
It relates to a process for the preparation of partially depolymerized glycosaminoglycan metal salts, wherein the metal is gold or silver, which comprises the steps of: a) depolymerization of a high molecular weight glycosaminoglycan metal salt; wherein the metal is different from gold or silver with a depolymerizing agent selected from the group consisting of potassium permanganate, sodium hydroxide; and hydrogen peroxide; b) bleaching with hydrogen peroxide; and c) metal ion exchange. It also relates to the partially depolymerized glycosaminoglycan gold or silver salts obtainable by said process, to their oral or topical pharmaceutical or cosmetic compositions, to their pharmaceutical uses for the treatment and/or prevention of wounds, scars, burns, microbial infections and inflammatory processes of the skin; and to their cosmetic uses for skin care.

No. of Pages : 33 No. of Claims : 29

(12) PATENT APPLICATION PUBLICATION
(19) INDIA
(22) Date of filing of Application :25/11/2013

(21) Application No.3452/KOLNP/2013 A
(43) Publication Date : 07/11/2014

(54) Title of the invention : COMPUTER SYSTEM, METHOD FOR ACCESSING PERIPHERAL COMPONENT INTERCONNECT EXPRESS ENDPOINT DEVICE, AND APPARATUS.

(51) International classification :G06F 13/00
(31) Priority Document No :NA
(32) Priority Date :NA
(33) Name of priority country :NA
(86) International Application No :PCT/CN2013/075088
Filing Date :02/05/2013
(87) International Publication No :WO/2014/176775
(61) Patent of Addition to Application Number :NA
Filing Date :NA
(62) Divisional to Application Number :NA
Filing Date :NA

(71)**Name of Applicant :**
1)HUAWEI TECHNOLOGIES CO.,LTD.
Address of Applicant :HUAWEI ADMINISTRATION BUILDING, BANTIAN, LONGGANG DISTRICT, SHENZHEN, GUANGDONG 518129 P.R.China
(72)**Name of Inventor :**
1)DU,GE

(57) Abstract :
Embodiments of the present invention provide a computer system and a method for accessing a peripheral component interconnect express PCIe endpoint device. The computer system includes: a processor, a PCIe bus, and an access proxy. The access proxy connects to the processor and the PCIe endpoint device; the processor is configured to acquire an operation instruction, where the operation instruction instructs the processor to access the PCIe endpoint device by using the access proxy, and send an access request to the access proxy according to the operation instruction, where the access request instructs the access proxy to access the PCIe endpoint device; and the access proxy is configured to send a response message of the access request to the processor after receiving the access request sent by the processor. Because the processor does not directly access the PCIe endpoint device to be accessed but completes access by using the access proxy, the access proxy is capable of returning the response message of the access request to the processor, thereby avoiding an MCE reset for the processor.

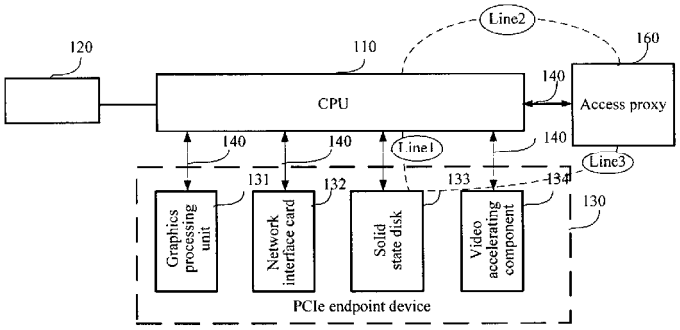

No. of Pages : 59 No. of Claims : 46

(12) PATENT APPLICATION PUBLICATION
(19) INDIA
(22) Date of filing of Application :13/08/2014

(21) Application No.1683/KOLNP/2014 A
(43) Publication Date : 07/11/2014

(54) Title of the invention : CALIPER BRAKE APPARATUS

(51) International classification :F16D 65/18
(31) Priority Document No :2012-22692
(32) Priority Date :06/02/2012
(33) Name of priority country :Japan
(86) International Application No :PCT/JP2012/080889
Filing Date :29/11/2012
(87) International Publication No :WO 2013/118374
(61) Patent of Addition to Application Number :NA
Filing Date :NA
(62) Divisional to Application Number :NA
Filing Date :NA

(71)**Name of Applicant :**
1)KAYABA INDUSTRY CO., LTD.
Address of Applicant :WORLD TRADE CENTER BLDG.,4-1, HAMAMATSU-CHO 2-CHOME, MINATO-KU,TOKYO 1056111, Japan
(72)**Name of Inventor :**
1)TSUTOMU SUZUKI
2)YOSHIYUKI OOKAWARA

(57) Abstract :
A caliper brake apparatus includes a caliper main body that is supported on a vehicle body, a brake lining that advances/retreats relative to the caliper main body and can apply a frictional force by slidingly contacting a disc, a guide plate that supports the brake lining, an anchor pin that supports the guide plate on the caliper main body such that it can freely advance/retreat, a piston that advances/retreats relative to the caliper main body and can press against the brake lining via the guide plate, a diaphragm that abuts a rear surface of the piston and defines a pressure chamber within the caliper main body and elastically deforms due to pressure of compressed air within the pressure chamber so as to move the piston, and a piston plate that supports the piston on the anchor pin such that the piston can freely slide.

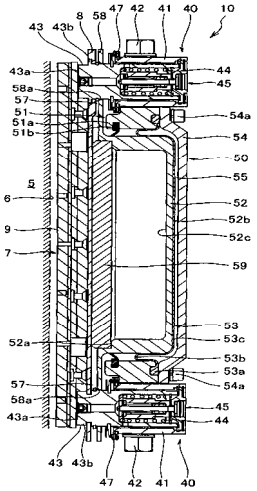

No. of Pages : 19 No. of Claims : 6

(12) PATENT APPLICATION PUBLICATION
(19) INDIA
(22) Date of filing of Application :01/05/2013

(21) Application No.500/KOL/2013 A
(43) Publication Date : 07/11/2014

(54) Title of the invention : A LOW COST, PORTABLE AND DRIFT CORRECTED SEMI-CONDUCTING METAL OXIDE GAS SENSOR DEVICE AND PROCESS FOR DOMESTIC AND INDUSTRIAL APPLICATIONS

(51) International classification	:H01L 29/00
(31) Priority Document No	:NA
(32) Priority Date	:NA
(33) Name of priority country	:NA
(86) International Application No	:NA
Filing Date	:NA
(87) International Publication No	: NA
(61) Patent of Addition to Application Number	:NA
Filing Date	:NA
(62) Divisional to Application Number	:NA
Filing Date	:NA

(71)**Name of Applicant :**
1)INDIAN INSTITUTE OF TECHNOLOGY
Address of Applicant :KHARAGPUR, PIN- 721302, DIST-MIDNAPORE, WEST BENGAL, INDIA.
(72)**Name of Inventor :**
1)MAJUMDER, SUBHASISH, BASU;
2)MAITY, ARNAB

(57) Abstract :
A low cost, portable and drift corrected gas sensor device and process for the compensation of drift in a semiconductor gas sensor with slope and standard deviation variation is disclosed. The gas sensing device (100) comprises of at least one sensor (102), a microprocessor (104), and a feedback circuitry (106). The at least one sensor (102) is exposed to the harsh gas environment to sense the gas and to generate at least on signal. The microprocessor has at least one sensor embedded in it. The microprocessor is configured to monitor a baseline of the at least one sensor based on the at least on signal for feature extraction. It also estimates a slope of the baseline and a standard deviation of the baseline. Further, it measures a voltage transient in a predefined time-span window. The feedback circuitry in the microprocessor provides an alert based on any deviation in the baseline.

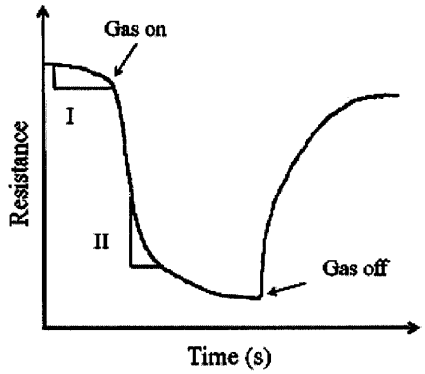

No. of Pages : 27 No. of Claims : 16

(12) PATENT APPLICATION PUBLICATION
(19) INDIA
(22) Date of filing of Application :01/05/2013

(21) Application No.499/KOL/2013 A
(43) Publication Date : 07/11/2014

(54) Title of the invention : SPACER FOR USE IN TAPER ROLLER OR ANGULAR CONTACT BEARINGS.

(51) International classification	:F16C 19/00	(71)**Name of Applicant :**
(31) Priority Document No	:NA	**1)INDIAN INSTITUTE OF TECHONOLOGY, KHARAGPUR**
(32) Priority Date	:NA	Address of Applicant :SPONSORED RESEARCH AND INDUSTRIAL CONSULTANCY, INDIAN INSTITUTE OF TECHNOLOGY, KHARAGPUR 721302, WEST BENGAL, INDIA.
(33) Name of priority country	:NA	
(86) International Application No	:NA	
Filing Date	:NA	
(87) International Publication No	: NA	(72)**Name of Inventor :**
(61) Patent of Addition to Application Number	:NA	**1)RACHERLA, VIKRANTH**
Filing Date	:NA	
(62) Divisional to Application Number	:NA	
Filing Date	:NA	

(57) Abstract :
A spacer for use in taper roller or angular contact bearings which is used to apply predetermined preload on stationary raceways that are relatively insensitive to machining inaccuracies or end play is disclosed. The spacer has a central segment which buckles in so as to limit the maximum load that the spacer can apply. The contact bearing (1) arrangement comprises of two spacers, a hollow cylindrical inner spacer (3) and an outer spacer (4), wherein a width of the inner spacer (3) dictates the length change in outer spacer; a thin central segment (5) with a specific radius is placed in the outer spacer, such that when the outer spacer is subjected to uni-axial compression along its axis, the outer spacer initially offers a force-displacement response; and when a critical load is reached the thin central segment buckle and results in a sharp knee in spacer in the force-displacement response.

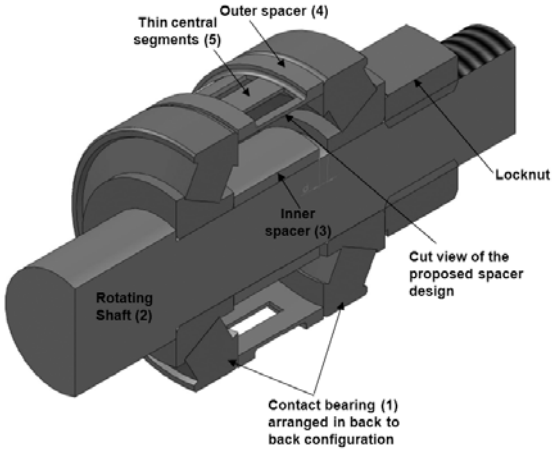

No. of Pages : 17 No. of Claims : 15

(12) PATENT APPLICATION PUBLICATION
(19) INDIA
(22) Date of filing of Application :12/08/2014
(21) Application No.1676/KOLNP/2014 A
(43) Publication Date : 07/11/2014

(54) Title of the invention : DEVICE FOR CONTROLLING A RAIL SWITCH

(51) International classification :B61L 5/02,B61L 15/00
(31) Priority Document No :A 171/2012
(32) Priority Date :09/02/2012
(33) Name of priority country :Austria
(86) International Application No :PCT/AT2013/000021
Filing Date :07/02/2013
(87) International Publication No :WO 2013/116882
(61) Patent of Addition to Application Number :NA
Filing Date :NA
(62) Divisional to Application Number :NA
Filing Date :NA

(71)**Name of Applicant :**
1)VOESTALPINE HYTRONICS GMBH
Address of Applicant :ALPINESTRAE 1, A-8740 ZELTWEG, AUSTRIA
(72)**Name of Inventor :**
1)LEITNER, JOSEF
2)KOPILOVITSCH, HARALD

(57) Abstract :
In a device for setting a rail switch that comprises a tongue device with two stock rails (1, 2) and tongue rails (3, 4) assigned to the stock rails (1, 2), in which a plurality of setting devices, particularly at least three setting devices (9, 10), are arranged offset in the longitudinal rail direction and in which the setting devices (9, 10) are mechanically coupled to one another by means of a coupling rod assembly (16) in such a way that they are driven equidirectionally, the coupling rod assembly respectively comprises between two adjacent setting devices (9, 10) a separate double rod assembly consisting of two parallel and longitudinally moveable coupling rods (19, 20) that mechanically couple the two adjacent setting devices (9, 10) to one another and extend between the two stock rails (1, 2).

No. of Pages : 19 No. of Claims : 13

(12) PATENT APPLICATION PUBLICATION
(19) INDIA
(22) Date of filing of Application :12/08/2014
(21) Application No.1677/KOLNP/2014 A
(43) Publication Date : 07/11/2014

(54) Title of the invention : BINDER COMPOSITIONS AND METHODS FOR MAKING AND USING SAME

(51) International classification :C08L77/00,C08L101/00
(31) Priority Document No :13/350,481
(32) Priority Date :13/01/2012
(33) Name of priority country :U.S.A.
(86) International Application No :PCT/US2013/021094
Filing Date :11/01/2013
(87) International Publication No :WO 2013/106613
(61) Patent of Addition to Application Number :NA
Filing Date :NA
(62) Divisional to Application Number :NA
Filing Date :NA

(71)**Name of Applicant :**
1)GEORGIA-PACIFIC CHEMICALS LLC
Address of Applicant :133 Peacthtree Street NE, Atlanta, Georgia 30303 U.S.A.
(72)**Name of Inventor :**
1)SRINIVISAN, Ramji
2)GAPUD, Benjamin D.
3)SHOEMAKE, Kelly A.

(57) Abstract :
Binder compositions and methods for making and using same are provided. The binder composition can include at least one polyamidoamine prepolymer and at least one copolymer. The copolymer can include one or more vinyl aromatic derived units, and one or more unsaturated carboxylic acids, one or more unsaturated carboxylic anhydrides, or a combination thereof. The copolymer can be modified by reaction with one or more base compounds.

No. of Pages : 62 No. of Claims : 20

(12) PATENT APPLICATION PUBLICATION
(19) INDIA
(22) Date of filing of Application :20/08/2014
(21) Application No.1750/KOLNP/2014 A
(43) Publication Date : 07/11/2014

(54) Title of the invention : TOWER STRUCTURE AND METHOD OF ASSEMBLING

(51) International classification :E04H12/00
(31) Priority Document No :61/603,728
(32) Priority Date :27/02/2012
(33) Name of priority country :U.S.A.
(86) International Application No :PCT/US2013/027939
Filing Date :27/02/2013
(87) International Publication No :WO 2013/130544
(61) Patent of Addition to Application Number :NA
Filing Date :NA
(62) Divisional to Application Number :NA
Filing Date :NA

(71)**Name of Applicant :**
1)NORTHSTAR ENDEAVORS, LLC
Address of Applicant :P.O. Box 452, Blair, Nebraska 68008 U.S.A.
(72)**Name of Inventor :**
1)WILLIS, Jeffrey O.
2)MENICHETTI, John

(57) Abstract :
A modular tower structure is described herein. The modular tower uses a cost-effective, efficient design that reduces the amount of steel necessary for tower structures for wind turbines. The modular tower is constructed from sections. The sections are constructed from panels. The panels comprise a curved or arcuate shape. The panels include vertical edges and horizontal edges. A vertical connection connects or secures the panels at the vertical edges of the panels and forms the sections. The sections have a generally circular shape. The vertical connection includes an interior vertical friction plate positioned over a seam or gap between adjacent panels and an exterior vertical friction plate positioned over the seam or gap between adjacent panels.

No. of Pages : 49 No. of Claims : 25

(12) PATENT APPLICATION PUBLICATION
(19) INDIA
(22) Date of filing of Application :20/08/2014
(21) Application No.1751/KOLNP/2014 A
(43) Publication Date : 07/11/2014

(54) Title of the invention : WATER-BASED COOLANT

(51) International classification :C21D1/60
(31) Priority Document No :2012-046191
(32) Priority Date :02/03/2012
(33) Name of priority country :Japan
(86) International Application No :PCT/JP2013/055111
Filing Date :27/02/2013
(87) International Publication No :WO 2013/129467
(61) Patent of Addition to Application Number :NA
Filing Date :NA
(62) Divisional to Application Number :NA
Filing Date :NA

(71)**Name of Applicant :**
1)IDEMITSU KOSAN CO.,LTD.
Address of Applicant :1-1, Marunouchi 3-chome, Chiyoda-ku, Tokyo 1008321 Japan
(72)**Name of Inventor :**
1)HASEGAWA Mayu
2)GOTO Masahisa
3)ICHITANI Katsumi
4)NOGUCHI Kenro

(57) Abstract :
This water based coolant is characterized by being obtained by mixing at least one of each of the following inorganic acid salts: phosphate phosphite sulphate sulphite borate molybdate tungstate carbonate hydrogen carbonate and sesquicarbonate. This water based coolant exhibits excellent cooling performance and excellent anti corrosion properties towards metal materials to be cooled therewith and thus is suitable for use as a cutting fluid and a quenching fluid for metal materials.

No. of Pages : 11 No. of Claims : 6

(12) PATENT APPLICATION PUBLICATION
(19) INDIA
(22) Date of filing of Application :30/07/2011
(21) Application No.3228/KOLNP/2011 A
(43) Publication Date : 07/11/2014

(54) Title of the invention : STAINLESS AUSTENITIC LOW NI STEEL ALLOY

(51) International classification :C21D 9/02
(31) Priority Document No :0900108-2
(32) Priority Date :30/01/2009
(33) Name of priority country :Sweden
(86) International Application No :PCT/SE2010/050086
Filing Date :28/01/2010
(87) International Publication No :WO/2010/087766
(61) Patent of Addition to Application Number :NA
Filing Date :NA
(62) Divisional to Application Number :NA
Filing Date :NA

(71)**Name of Applicant :**
1)SANDVIK INTELLECTUAL PROPERTY AB
Address of Applicant :S-811 81Sandviken SWEDEN
(72)**Name of Inventor :**
1)NYLÖF Lars;
2)SÖDERMAN Anders;

(57) Abstract :
See Attachment
An austenitic stainless steel alloy having the following composition in percent of weight (wt%): 0.02 ≤ C ≤ 0.06 Si <1.0 2.0 ≤Mn ≤ 6.0 2.0 ≤ Ni ≤ 4.5 17 ≤Cr ≤ 19 2.0 ≤ Cu ≤ 4.0 0.15 ≤N ≤ 0.25 O ≤ Mo ≤ 1.0 0≤ W ≤0.3 0 ≤ V≤0.3 0 < Ti≤ 0.5 O ≤AI ≤ LO O ≤ Nb≤ O.5 0 ≤ Co ≤ 1.0 the balance Fe and normally occurring impurities, characterized in that the contents of the alloying elements are balanced so that the following conditions are fulfilled: Ni_{eqv} -1.42Cr_{eqv} ≤ -13.42; and Ni_{eqv} + 0.85Cr_{eqv} ≥ 29.00 wherein Cr_{eqv}=[%Cr]+2[%Si]+1.5[%Mo]+5[%V]+5.5[%AI]+1.75[%Nb]+ 1.5[%Ti]+0.75[%W] Ni_{eqv}= [%Ni]+[%Co]+0.5[%Mn]+0.3[%Cu]+25[%N]+30[%C]; and -70 °C < MD30 < -25 °C,wherein MD30 = (551 -462([%C]+ [%N]) -9.2[%Si] -8.1 [%Mn] -13.7[%Cr] -29([%Ni]+ [%Cu]) -68[%Nb] -18.5[%Mo]) 0C.

No. of Pages : 30 No. of Claims : 14

(12) PATENT APPLICATION PUBLICATION
(19) INDIA
(22) Date of filing of Application :03/01/2012
(21) Application No.24/KOLNP/2012 A
(43) Publication Date : 07/11/2014

(54) Title of the invention : 1 2 4-THIAZOLIDIN-3-ONE DERIVATIVES AND THEIR USE IN THE TREATMENT OF CANCER

(51) International classification :C07D 277/20
(31) Priority Document No :61/213,735
(32) Priority Date :08/07/2009
(33) Name of priority country :U.S.A.
(86) International Application No :PCT/GB2010/001315
Filing Date :08/07/2010
(87) International Publication No :WO/2011/004162
(61) Patent of Addition to Application Number :NA
Filing Date :NA
(62) Divisional to Application Number :NA
Filing Date :NA

(71)**Name of Applicant :**
1)BALTIC BIO AB
Address of Applicant :Sufflörgränd 14 Box 489 S-90109 Umeå SWEDEN
(72)**Name of Inventor :**
1)WESTMAN Jacob
2)HALLETT Allan
3)VAGBERG Jan

(57) Abstract :
According to the invention there is provided a compound of formula I, wherein, X, W, A1 to A5 and D have meanings given in the description, which compounds are useful in the treatment of cancer.

No. of Pages : 97 No. of Claims : 34

(12) PATENT APPLICATION PUBLICATION
(19) INDIA
(22) Date of filing of Application :01/11/2011
(21) Application No.4466/KOLNP/2011 A
(43) Publication Date : 07/11/2014

(54) Title of the invention : INFORMATION MEDIUM HAVING ANTIVIRAL PROPERTIES AND METHOD FOR MAKING SAME

(51) International classification :A01N 25/34
(31) Priority Document No :0953053
(32) Priority Date :07/05/2009
(33) Name of priority country :France
(86) International Application No :PCT/IB2010/052028
Filing Date :07/05/2010
(87) International Publication No :WO/2010/128487
(61) Patent of Addition to Application Number :NA
Filing Date :NA
(62) Divisional to Application Number :NA
Filing Date :NA

(71)**Name of Applicant :**
1)ARJOWIGGINS SECURITY
Address of Applicant :21-23 Boulevard Haussmann F-75009 Paris FRANCE
(72)**Name of Inventor :**
1)ROSSET Henri

(57) Abstract :
The present invention relates to an information medium to be handled by a large number of users, such as a banknote, and having antiviral properties, and to a method for making same.

No. of Pages : 35 No. of Claims : 30

(12) PATENT APPLICATION PUBLICATION
(19) INDIA
(22) Date of filing of Application :16/01/2012
(21) Application No.99/KOLNP/2012 A
(43) Publication Date : 07/11/2014

(54) Title of the invention : AN AMPHIBIOUS FIGHTING VEHICLE RUNNING ON LAND AND WATER SURFACES

(51) International classification :B60F3
(31) Priority Document No :10-2009-0073759
(32) Priority Date :11/08/2009
(33) Name of priority country :Republic of Korea
(86) International Application No :PCT/KR2010/005241
Filing Date :10/08/2010
(87) International Publication No :WO/2011/019190
(61) Patent of Addition to Application Number :NA
Filing Date :NA
(62) Divisional to Application Number :NA
Filing Date :NA

(71)**Name of Applicant :**
1)LEE Jong Soo
Address of Applicant :Keumgang Mansion Suite 201 #76-4 Hongji-dong Chongro-gu Seoul 110-020 (KR) Republic of Korea
(72)**Name of Inventor :**
1)LEE Jong Soo

(57) Abstract :
An amphibious fighting vehicle capable of moving on a water surface including a front planning tracked belt disposed on a front portion of the amphibious fighting vehicle, a rear driving tracked belt, side buoys disposed on lateral sides of the amphibious fighting vehicle, a rear buoy disposed on a rear end of the amphibious fighting vehicle, the buoys assisting in setting an immersion line of the amphibious fighting vehicle at a predetermined value, and a set of identical engines that propel the amphibious fighting vehicle at a speed sufficient for movement on the water surface and a land surface.

No. of Pages : 18 No. of Claims : 6

(12) PATENT APPLICATION PUBLICATION
(19) INDIA
(22) Date of filing of Application :13/08/2014
(21) Application No.1693/KOLNP/2014 A
(43) Publication Date : 07/11/2014

(54) Title of the invention : DIES FOR SHAPING CONTAINERS AND METHODS FOR MAKING SAME

(51) International classification :B21D37/20,B21D41/00,B24B39/00
(31) Priority Document No :61/600,373
(32) Priority Date :17/02/2012
(33) Name of priority country :U.S.A.
(86) International Application No :PCT/US2013/026439
Filing Date :15/02/2013
(87) International Publication No :WO 2013/123396
(61) Patent of Addition to Application Number :NA
Filing Date :NA
(62) Divisional to Application Number :NA
Filing Date :NA

(71)**Name of Applicant :**
1)ALCOA INC.
Address of Applicant :Alcoa Corporate Center, 201 Isabella Street, Pittsburgh, PA 15212-5858 U.S.A.
(72)**Name of Inventor :**
1)DICK, Robert, E.
2)FEDUSA, Anthony, J.
3)MYERS, Gary, L.

(57) Abstract :
A method of manufacturing a die (10) for shaping metal containers comprises providing an expansion die (10) for manufacturing metal containers and peening at least a portion of the work surface (12) of the expansion die. Another method of manufacturing a die (30) for shaping metal containers comprises providing a die (30) for narrowing a diameter of metal containers and peening at least a portion of the work surface (32) of the die.

No. of Pages : 38 No. of Claims : 18

(12) PATENT APPLICATION PUBLICATION
(19) INDIA
(22) Date of filing of Application :18/08/2014
(21) Application No.1723/KOLNP/2014 A
(43) Publication Date : 07/11/2014

(54) Title of the invention : IMAGE GENERATION SYSTEMS AND IMAGE GENERATION METHODS

(51) International classification :G02B27/01
(31) Priority Document No :13/367,261
(32) Priority Date :06/02/2012
(33) Name of priority country :U.S.A.
(86) International Application No :PCT/US2013/024785
Filing Date :05/02/2013
(87) International Publication No :WO 2013/119576
(61) Patent of Addition to Application Number :NA
Filing Date :NA
(62) Divisional to Application Number :NA
Filing Date :NA

(71)**Name of Applicant :**
1)BATTELLE MEMORIAL INSTITUTE
Address of Applicant :902 Battelle Boulevard, P.O. Box 999, Richland, WA 99352 U.S.A.
(72)**Name of Inventor :**
1)EVANS, Allan, T.
2)BERNACKI, Bruce, E.

(57) Abstract :
Image generation systems and image generation methods are described. I n one aspect, an image generation system includes an attachment system configured to secure the image generation system to a head of a user in a position to be observed by the user; an illumination system having an exit pupil located at infinity and configured to emit light; a light modulator configured to receive the light from the illumination system and to selectively reflect at least some of the received light which corresponds to an image; a control system coupled with the light modulator and configured to access data content regarding the image, to generate a plurality of control signals according to the accessed data content, and to output the control signals to the light modulator to control the selective reflection of at least some of the received light; and an output optical system configured to direct the selectively reflected light towards an observer's eye to be observed by the observer.

No. of Pages : 52 No. of Claims : 45

(12) PATENT APPLICATION PUBLICATION
(19) INDIA
(22) Date of filing of Application :13/08/2014
(21) Application No.1690/KOLNP/2014 A
(43) Publication Date : 07/11/2014

(54) Title of the invention : TRANSMITTER, RECEIVER, MOBILE COMMUNICATION SYSTEM AND SYNCHRONIZATION CHANNEL TRANSMISSION METHOD

(51) International classification :H04L29/06
(31) Priority Document No :2005-174391
(32) Priority Date :14/06/2005
(33) Name of priority country :Japan
(86) International Application No :PCT/JP2006/311543
Filing Date :08/06/2006
(87) International Publication No :WO/2006/134829
(61) Patent of Addition to Application Number :NA
Filing Date :NA
(62) Divisional to Application Number :4818/KOLNP/2007
Filed on :11/12/2007

(71)**Name of Applicant :**
1)NTT DOCOMO,INC
Address of Applicant :11-1,NAGATACHO 2-CHOME, CHIYODA-KU, TOKYO 100-6150 Japan
(72)**Name of Inventor :**
1)TANNO, MOTOHIRO
2)HIGUCHII, KENICHI
3)SAWAHASHI, MAMORU
4)KISHIYAMA, YOSHIHISA

(57) Abstract :
A transmitter (10), receiver (20), mobile communication system and transmitting/receiving methods are disclosed. The transmitter (10) comprises a generation unit generating a frame including a plurality of OFDM symbols; and a transmission unit transmitting the generated frame. The transmitter (10) comprises multiple data channel generators (100.1-100.x). In each data channel generator (100), a sequence of transmitted data supplied from a generator (101) is encoded in an encoder (102) and the resulting data modulated in a modulator (103).

No. of Pages : 125 No. of Claims : 4

(12) PATENT APPLICATION PUBLICATION
(19) INDIA
(22) Date of filing of Application :13/08/2014
(21) Application No.1691/KOLNP/2014 A
(43) Publication Date : 07/11/2014

(54) Title of the invention : URETHANE-TYPE CURABLE ORGANIC BINDER FOR MOLD, AND MOLDING SAND COMPOSITION AND MOLD OBTAINED USING SAME

(51) International classification	:B22C1/22,C08G18/00,C08G18/54
(31) Priority Document No	:2012-066659
(32) Priority Date	:23/03/2012
(33) Name of priority country	:Japan
(86) International Application No	:PCT/JP2013/055950
Filing Date	:05/03/2013
(87) International Publication No	:WO 2013/141012
(61) Patent of Addition to Application Number	:NA
Filing Date	:NA
(62) Divisional to Application Number	:NA
Filing Date	:NA

(71)**Name of Applicant :**
1)ASAHI ORGANIC CHEMICALS INDUSTRY CO., LTD.
Address of Applicant :5955, Nakanose-cho 2-chome, Nobeoka-shi, Miyazaki 8828688 Japan
(72)**Name of Inventor :**
1)OKUYAMA, Kenichirou
2)TANAHASHI, Tomofumi

(57) Abstract :
Provided are: an organic binder for a mold, said organic binder being capable of prolonging the pot life of a molding sand composition advantageously without accompanying uneven curing, a lowering in mold strength, or an increase in the amount of a catalyst used; a molding sand composition which is obtained using the organic binder and which exhibits a prolonged pot life; and a mold produced from the molding sand composition through gas hardening. A urethane-type curable organic binder which is for use in the production of a urethane-based mold and which comprises a polyol compound and a polyisocyanate compound and further contains an alkoxysilyl-containing ketimine compound represented by a prescribed general formula.

No. of Pages : 28 No. of Claims : 12

(12) PATENT APPLICATION PUBLICATION
(19) INDIA
(22) Date of filing of Application :13/08/2014
(21) Application No.1692/KOLNP/2014 A
(43) Publication Date : 07/11/2014

(54) Title of the invention : THERMOSENSITIVE NANOPARTICLE FORMULATIONS AND METHOD OF MAKING THE SAME

(51) International classification :A61K9/127
(31) Priority Document No :61/600,418
(32) Priority Date :17/02/2012
(33) Name of priority country :U.S.A.
(86) International Application No :PCT/US2013/026453
Filing Date :15/02/2013
(87) International Publication No :WO 2013/123407
(61) Patent of Addition to Application Number :NA
Filing Date :NA
(62) Divisional to Application Number :NA
Filing Date :NA

(71)**Name of Applicant :**
1)CELSION CORPORATION
Address of Applicant :997 Lenox Drive, Suite 100, Lawrenceville, NJ 08648 U.S.A.
(72)**Name of Inventor :**
1)REED, Robert, A.
2)SU, Daishui

(57) Abstract :
The present invention relates to a formulation of thertnosensiiive liposomes, and more specifically to a formulation of liposomes comprising phospholipids and a surface active agent, wherein the liposomes support long term storage at temperatures less than or equal to about 8 °C, control degradate formation to maximize product potency and release their contents at mild hyperthermic temperatures. Methods of making formulations are also described.

No. of Pages : 44 No. of Claims : 40

(12) PATENT APPLICATION PUBLICATION
(19) INDIA
(22) Date of filing of Application :17/10/2008

(21) Application No.1766/KOL/2008 A
(43) Publication Date : 07/11/2014

(54) Title of the invention : A FAST RESPONSE ENERGY EFFICIENT CURRENT CONTROL SCHEME FOR A DC-DC CONVERTER WITH A FREEWHEELING SWITCH

(51) International classification	:G05F1/00	(71)**Name of Applicant :**
(31) Priority Document No	:NA	**1)INDIAN INSTITUTE OF TECHNOLOGY**
(32) Priority Date	:NA	Address of Applicant :SPONSORED RESEARCH &
(33) Name of priority country	:NA	INDUSTRIAL CONSULTANCY, INDIAN INSTITUTE OF
(86) International Application No	:NA	TECHNOLOGY, KHARAGPUR West Bengal India
Filing Date	:NA	(72)**Name of Inventor :**
(87) International Publication No	: NA	**1)KAPAT, SANTANU**
(61) Patent of Addition to Application Number	:NA	**2)PATRA, AMIT**
Filing Date	:NA	**3)BANERJEE, SOUMITRO**
(62) Divisional to Application Number	:NA	
Filing Date	:NA	

(57) Abstract :
The invention relates to fast response energy efficient DC-DC power converter apparatus with freewheeling switch and method of operation thereof. The converter is having inductor current based control scheme involving two current references, namely Iref+ and Iref-. At the start of a clock period, synchronized with an external clock, MOSFETs51 turns on and 52 turns off. Inductor current rises and continues to rise until it reaches Iref+ when 51 turns off. Then the inductor current starts falling until it reaches Iref- when S2 turns on. Inductor current then remains almost same till the arrival of the next clock pulse. Iref+ is obtained from the feedback loop comprising the output voltage and the reference voltage along with a PI or lag-lead controller. Iref- is obtained from multiple feed-forward paths connected to the input voltage, Vin, the sensed average load current, Is2, the reference voltage, Vref and a manually adjustable voltage source. The apparatus is adapted for wide range of voltage and load current, with tri-state operation and improved load regulation as well as audio susceptability.

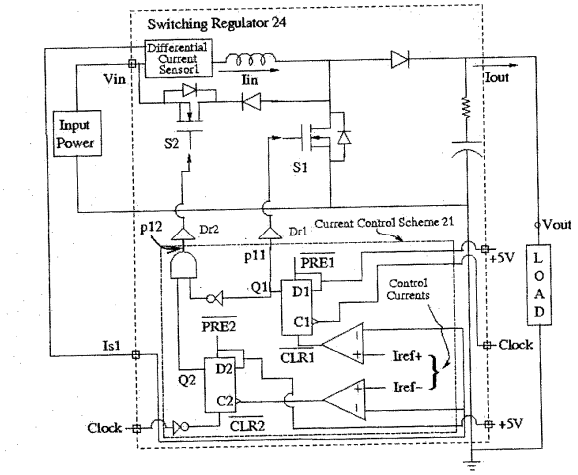

No. of Pages : 27 No. of Claims : 19

(12) PATENT APPLICATION PUBLICATION
(19) INDIA
(22) Date of filing of Application :13/01/2012
(21) Application No.84/KOLNP/2012 A
(43) Publication Date : 07/11/2014

(54) Title of the invention : TELECTOMMUNICATIONS METHOD AND APPARATUS FOR FACILITATING POSITIONING MEASUREMENTS

(51) International classification :H04W64
(31) Priority Document No :12/488,303
(32) Priority Date :19/06/2009
(33) Name of priority country :U.S.A.
(86) International Application No :PCT/SE2009/050789
Filing Date :22/06/2009
(87) International Publication No :WO/2010/147525
(61) Patent of Addition to Application Number :NA
Filing Date :NA
(62) Divisional to Application Number :NA
Filing Date :NA

(71)**Name of Applicant :**
1)TELEFONAKTIEBOLAGET LM ERICSSON (publ)
Address of Applicant :S-164 83 Stockholm SWEDEN
(72)**Name of Inventor :**
1)KAZMI Muhammad;
2)LINDOFF Bengt;
3)MÜLLER Walter;

(57) Abstract :
A wireless terminal (30) capable of operating in a discontinuous mode comprising and method for operating such wireless terminal (30) facilitate measurements pertaining to position of the wireless terminal (30). The method includes receiving a message from the radio access network (20). The measurement request message is configured to indicate that measurements are to be performed by the wireless terminal on downlink signals transmitted by the base station or by the base station on downlink signals transmitted by the base station. The method further comprises, as a result of or after receiving the message, changing operation of the wireless terminal (30) from a discontinuous mode to a modified mode to facilitate performance of the measurements. Relative to the discontinuous mode at least one of following are shortened or eliminated in the modified mode: (i) the non-reception periods, and (ii) the non-transmission periods. Changing from a discontinuous mode … to a modified mode includes one or more of: (1) changing mode of the wireless terminal (e.g., changing from a discontinuous mode [such as discontinuous reception (DRX) or discontinuous transmission (DTX)] to a continuous transmission mode); (2) changing from the discontinuous mode (a first discontinuous mode) to a modified discontinuous mode (a second discontinuous mode).

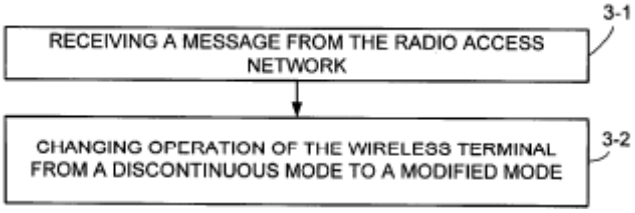

No. of Pages : 55 No. of Claims : 35

(12) PATENT APPLICATION PUBLICATION
(19) INDIA
(22) Date of filing of Application :20/08/2014
(21) Application No.1748/KOLNP/2014 A
(43) Publication Date : 07/11/2014

(54) Title of the invention : METHODS AND APPARATUS FOR PARAMETER ADJUSTMENT

(51) International classification :H04W 56/00
(31) Priority Document No :61/612,884
(32) Priority Date :19/03/2012
(33) Name of priority country :U.S.A.
(86) International Application No :PCT/US2013/033015
Filing Date :19/03/2013
(87) International Publication No :WO 2013/151787
(61) Patent of Addition to Application Number :NA
Filing Date :NA
(62) Divisional to Application Number :NA
Filing Date :NA

(71)**Name of Applicant :**
1)APPLE INC.
Address of Applicant :1 INFINITE LOOP, CUPERTINO, CA 95014 U.S.A.
(72)**Name of Inventor :**
1)NUKALA, GUARAV
2)DEIVASIGAMANI, GIRI, PRASSAD
3)VASUDEVAN, SRINIVASAN
4)ALAM, MUHAMMAD, A.

(57) Abstract :
Methods and apparatus for parameter (e.g., timing) adjustment in a wireless network, in one embodiment, the timing adjustment includes detection and compensation for one or more missed adjustment messages. In one variant, for certain designated events, a client device may ignore a timer expiration, and apply a previously stored timing advance (TA) command. For example, a user equipment (UE) will determine if a TA command has been missed during a measurement gap interval (such as e.g., to perform measurements on an unsynchronized network), and reuse the previous TA command value. Reusing the TA command value introduces negligible error, which can be corrected in existing error correction capabilities (e.g., OFDM cyclic prefixes, etc.).

No. of Pages : 27 No. of Claims : 25

(12) PATENT APPLICATION PUBLICATION
(19) INDIA
(22) Date of filing of Application :20/08/2014
(21) Application No.1749/KOLNP/2014 A
(43) Publication Date : 07/11/2014

(54) Title of the invention : FUNCTIONAL PLA-PEG COPOLYMERS, THE NANOPARTICLES THEREOF, THEIR PREPARATION AND USE FOR TARGETED DRUG DELIVERY AND IMAGING

(51) International classification :C07D 249/04
(31) Priority Document No :12305236.7
(32) Priority Date :28/02/2012
(33) Name of priority country :EPO
(86) International Application No :PCT/EP2013/054085
Filing Date :28/02/2013
(87) International Publication No :WO 2013/127949
(61) Patent of Addition to Application Number :NA
Filing Date :NA
(62) Divisional to Application Number :NA
Filing Date :NA

(71)**Name of Applicant :**
1)SANOFI
Address of Applicant :54, RUE LA BOÅTIE, F-75008 PARIS FRANCE
(72)**Name of Inventor :**
1)BAZILE, DIDIER
2)COUVREUR, PATRICK
3)LAKKIREDDY, HARIVARDHAN REDDY
4)MACKIEWICZ, NICOLAS
5)NICOLAS, JULIEN

(57) Abstract :
Functional PLA-PEG copolymers, the nanoparticles thereof, their preparation and use for targeted drug delivery and imaging The present invention concerns novel functional PEG-PLA containing copolymers, the nanoparticles containing the same, their process of preparation and their use for site specific targeted drug delivery and imaging.

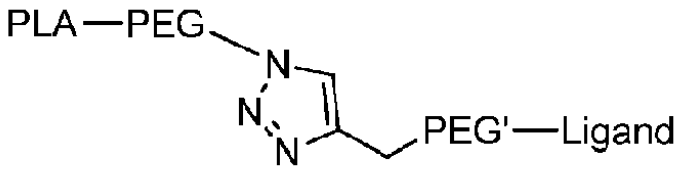

No. of Pages : 62 No. of Claims : 37

(12) PATENT APPLICATION PUBLICATION
(19) INDIA
(22) Date of filing of Application :08/08/2014
(21) Application No.1655/KOLNP/2014 A
(43) Publication Date : 07/11/2014

(54) Title of the invention : ACTUATOR SYSTEM AND METHOD

(51) International classification :B64C13/00
(31) Priority Document No :NA
(32) Priority Date :NA
(33) Name of priority country :NA
(86) International Application No :PCT/US2012/024558
Filing Date :09/02/2012
(87) International Publication No :WO 2013/119242
(61) Patent of Addition to Application Number :NA
Filing Date :NA
(62) Divisional to Application Number :NA
Filing Date :NA

(71)**Name of Applicant :**
1)MOOG INC.
Address of Applicant :Seneca and Jamison Road, East Aurora, NEW YORK 14052, U.S.A.
(72)**Name of Inventor :**
1)KOPP, John

(57) Abstract :
An actuator system comprising a shared link (121) arranged to pivot about a first axis (131) relative to a reference structure, a controlled element (125) arranged to pivot about a second axis (126) relative to the reference structure, a first member (146, 152) arranged to pivot about a third axis (134) relative to the shard link and a fourth axis (136) relative to the controlled member, a first actuator arranged to control a first variable distance (LI) between the third axis and fourth axis, a second member (147, 153) arranged to pivot about a fifth axis (133) relative to the shared link and a sixth axis (135) relative to the controlled element, a second actuator (141) arranged to control a second variable distance between the fifth axis and the sixth axis, the system configured such that a change in the first variable distance causes rotation of the controlled element about the second axis when the second variable distance is constant and vice versa.

No. of Pages : 48 No. of Claims : 55

(12) PATENT APPLICATION PUBLICATION
(19) INDIA
(22) Date of filing of Application :02/05/2013

(21) Application No.504/KOL/2013 A
(43) Publication Date : 07/11/2014

(54) Title of the invention : A NOVEL PROCESS FOR THE PRODUCTION OF ALUMINIUM BASED METAL MATRIX COMPOSITE REINFORCED WITH AL2O3-SIC-C CERAMIC POWDERS PREPARED FROM FLY ASH.

(51) International classification	:C22C1/10, C22C21/00
(31) Priority Document No	:NA
(32) Priority Date	:NA
(33) Name of priority country	:NA
(86) International Application No	:NA
Filing Date	:NA
(87) International Publication No	: NA
(61) Patent of Addition to Application Number	:NA
Filing Date	:NA
(62) Divisional to Application Number	:NA
Filing Date	:NA

(71)**Name of Applicant :**
1)GANDHI INSTITUTE OF ENGINEERING & TECHNOLOGY
Address of Applicant :AT/PO-GUNUPUR,DIST-RAYAGADA(ODISHA), PIN-765022 Orissa India
(72)**Name of Inventor :**
1)R.I.GANGULY
2)R.GOVINDA RAO
3)R.R.DASH

(57) Abstract :
This invention relates to an aluminium based metal matrix composite alumina reinforced with alumina-silicon carbide-carbon (Al2O3-SiC-C) powder from flyash.

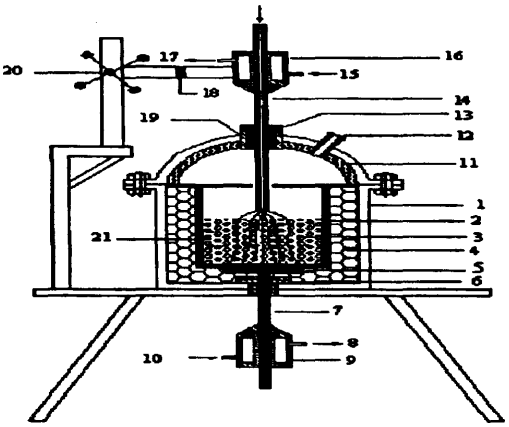

No. of Pages : 19 No. of Claims : 6

(12) PATENT APPLICATION PUBLICATION
(19) INDIA
(22) Date of filing of Application :11/08/2014

(21) Application No.1665/KOLNP/2014 A
(43) Publication Date : 07/11/2014

(54) Title of the invention : STABILISING AND ANALYSING FATTY ACIDS IN A BIOLOGICAL SAMPLE STORED ON SOLID MEDIA

(51) International classification	:G01N30/50,G01N33/48,G01N33/92	
(31) Priority Document No	:2012900110	
(32) Priority Date	:11/01/2012	
(33) Name of priority country	:Australia	
(86) International Application No	:PCT/AU2013/000021	
Filing Date	:11/01/2013	
(87) International Publication No	:WO 2013/104025	
(61) Patent of Addition to Application Number	:NA	
Filing Date	:NA	
(62) Divisional to Application Number	:NA	
Filing Date	:NA	

(71)**Name of Applicant :**
1)ADELAIDE RESEARCH & INNOVATION PTY LTD
Address of Applicant :Level 14 115 Grenfell Street Adelaide, South Australia 5000 Australia
(72)**Name of Inventor :**
1)GIBSON, Robert
2)GE, Liu

(57) Abstract :
The invention relates to a method for stabilising fatty acids present in a sample such as bodily fluids (e.g. blood, saliva, breast milk, urine, semen, blood plasma and serum), using a solid medium (such as paper, a glass-based matrix, a paper-based matrix, a cellulose-based matrix, hydrophilic polymers, polytetrafluoroethylene, fibreglass and porous ceramics) comprising chelating agents (e.g. ethylenediamine-tetraacetic acid, ascorbic acid, citric acid, or salts thereof), antioxidants (e.g. butylated hydroxytoluene, butylated hydroxyanisole or t-butylhydroquinone) and less than than about 2 µg/cm2 of contaminants which is capable of stabilising fatty acids applied thereto, and a method for preparing such media. The invention further relates to a method for determining the fatty acid composition of a sample stored on such a medium.

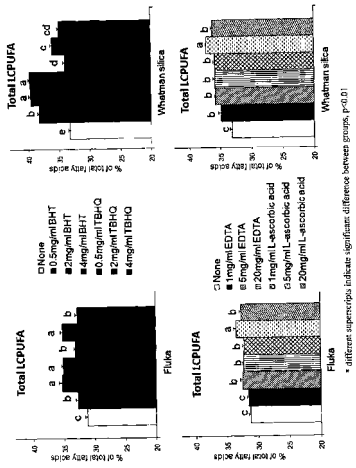

No. of Pages : 53 No. of Claims : 74

(12) PATENT APPLICATION PUBLICATION
(19) INDIA
(22) Date of filing of Application :13/01/2012

(21) Application No.70/KOLNP/2012 A
(43) Publication Date : 07/11/2014

(54) Title of the invention : DEVICE AND METHOD FOR SELECTING AT LEAST ONE MEDIA FOR RECOMMENDATION TO A USER

(51) International classification :G06F13
(31) Priority Document No :12/484,774
(32) Priority Date :15/06/2009
(33) Name of priority country :U.S.A.
(86) International Application No :PCT/IB2010/052595
Filing Date :10/06/2010
(87) International Publication No :WO/2010/146508
(61) Patent of Addition to Application Number :NA
Filing Date :NA
(62) Divisional to Application Number :NA
Filing Date :NA

(71)**Name of Applicant :**
1)TELEFONAKTIEBOLAGET LM ERICSSON (publ)
Address of Applicant :S-164 83 Stockholm SWEDEN
(72)**Name of Inventor :**
1)NICOLOV Eugene;

(57) Abstract :
The invention relates to a method and device for selecting at least one media for recommendation to a user. The device comprises an interface to a users database comprising data relative to users medias consumption and data relative to connections between users. The device further comprises a statistical analyzer receiving data relative to users medias consumption and connections between users in inputs and generating a first list of at least one media for output. The device comprises an interface to a medias library comprising parameters indicative of medias content. The device also comprises an analytical analyzer receiving data relative to users medias consumption and parameters indicative of medias content in inputs and generating a second list of at least one media for output. The device also comprises a recommendation engine receiving the first and second lists of media and selecting at least one media for recommendation to the user.

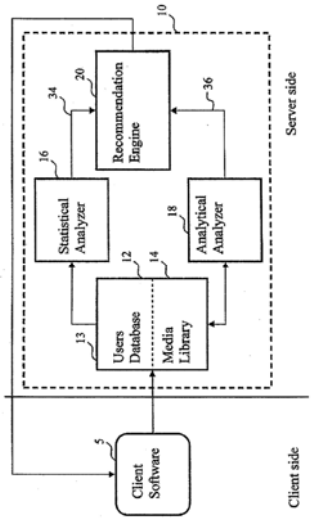

No. of Pages : 38 No. of Claims : 15

(12) PATENT APPLICATION PUBLICATION
(19) INDIA
(22) Date of filing of Application :03/05/2013

(21) Application No.510/KOL/2013 A
(43) Publication Date : 07/11/2014

(54) Title of the invention : A TAMARIND DE-SEEDER MACHINE.

(51) International classification	:A01C 7/00
(31) Priority Document No	:NA
(32) Priority Date	:NA
(33) Name of priority country	:NA
(86) International Application No	:NA
Filing Date	:NA
(87) International Publication No	: NA
(61) Patent of Addition to Application Number	:NA
Filing Date	:NA
(62) Divisional to Application Number	:NA
Filing Date	:NA

(71)**Name of Applicant :**
1)INDIAN INSTITUTE OF TECHNOLOGY,
Address of Applicant :INDIAN INSTITUTE OF KHARAGPUR 721302, WEST BENGAL,INDIA
(72)**Name of Inventor :**
1)PROF.P.B.S.BHADORIA
2)DR.E.V. THOMAS

(57) Abstract :
A tamarind De-seeder machine comprising a frame (8), a pedal (1), a pedal rod (2) connecting the pedal with pinion-gear (3) mounted on a shaft (4), the shaft has a fly wheel (6) at the other end. The motion of pedal is transferred to fly wheel (6) and a drum (5). The drum is attached to the hopper shaft (4) with a key. A concave is fixed to the frame and warps around the drum for 225°. A hopper (7) is fed with tamarind. Tamarind de-seeding exposes the seed while the drum (5) is rotating. The concave surface (11) presses the tamarind berry for exposing the seeds when the set of pegs rotating on a separate drum are disposed for knocking down the seeds for collection.

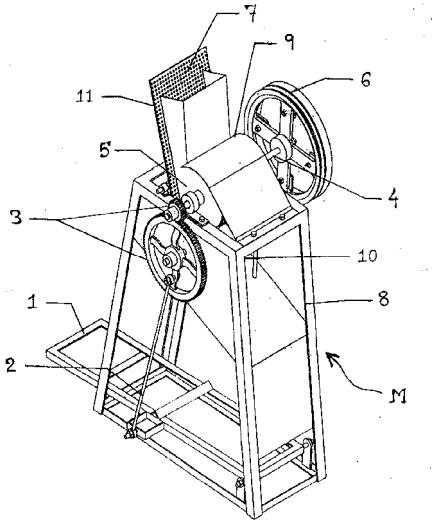

No. of Pages : 10 No. of Claims : 1

AMENDMENT UNDER SEC. 57

An application for change in the name of the Patentee from SAGEM SECURITE to MORPHO in respect of Patent No. 225266 (IN/PCT/2002/01268) was filed. Any person interested may at any time within three months from the date of this publication give notice on Form-14, if any, to the Controller of Patents, at the appropriate office.

Publication Under Section 43(2) in Respect of the Grant

Following Patents have been granted and any person interested in opposing these patents under Section 25(2) may at any time within one year from the date of this issue, give notice to the Controller of Patents at the appropriate office, on the prescribed form-7 along with written statement and evidence, if any.

Serial Number	Patent Number	Application Number	Date of Application	Date of Priority	Title of Invention	Name of Patentee	Date of Publication of Abstract u/s 11(A)	Appropriate Office
1	263531	5744/DELNP/2007	26/01/2006	31/01/2005	METHODS FOR PREPARING 1,1,1-TRIS (4-HYDROXYPHENYL)ALKANES	GENERAL ELECTRIC COMPANY	17/08/2007	DELHI
2	263533	1544/DEL/2008	26/06/2008 15:20:26	27/06/2007	INTEGRATED PROCESSING OF METHANOL TO OLEFINS	UOP LLC	29/08/2008	DELHI
3	263534	5608/DELNP/2008	26/12/2006	28/12/2005	COATING MATERIAL	MITSUI CHEMICALS, INC.	26/09/2008	DELHI
4	263556	9538/DELNP/2007	14/06/2006	30/06/2005	BROMINATED STYRENIC POLYMERS AND THEIR PREPARATION	ALBEMARLE CORPORATION,	27/06/2008	DELHI
5	263561	7791/DELNP/2008	14/03/2007	20/03/2006	HIGH CORROSION RESISTANCE HOT DIP GALVANIZED STEEL MATERIAL	NIPPON STEEL & SUMITOMO METAL CORPORATION	31/10/2008	DELHI
6	263563	2711/DELNP/2008	12/10/2006	12/10/2005	VARIANT NEUTRAL METALLOPROTEASES HAVING IMPROVED THERMOSTABILITY, WASH PERFORMANCE OR AUTOLYTIC STABILITY	GENENCOR INTERNATIONAL , INC.	25/07/2008	DELHI
7	263565	8370/DELNP/2008	02/04/2007	07/04/2006	ACID DYES	CLARIANT FINANCE (BVI) LIMITED,	29/05/2009	DELHI
8	263567	2515/DELNP/2006	05/11/2004	05/11/2003	ZERO INSERTION FORCE HIGH FREQUENCY CONNECTOR.	TENSOLITE COMPANY	10/08/2007	DELHI
9	263572	2075/DEL/2004	21/10/2004		AN IMPROVED PROCESS FOR PRODUCTION OF 2-DEOXY-D-GLUCOSE	THE DIRECTOR GENERAL, DEFENCE RESEARCH AND DEVELOPMENT ORGANIZATION	19/06/2009	DELHI
10	263573	10339/DELNP/2008	22/06/2007	23/06/2006	SURFACE-TREATED METAL MATERIAL AND METAL SURFACE TREATMENT AGENT	NIPPON STEEL CORPORATION,MITSUI CHEMICALS POLYURETHANES, INC	20/03/2009	DELHI

11	263574	2683/DEL/2007	20/12/2007 16:46:35		A METHOD FOR THE PREPARATION OF HYDROTREATING CATALYS	INDIAN OIL CORPORATION LIMITED	10/07/2009	DELHI
12	263575	6803/DELNP/2007	03/03/2006	04/03/2005	SEAL FOR A DISPENSING APPARATUS	BESPAK PLC	05/10/2007	DELHI
13	263578	7397/DELNP/2007	20/03/2006	23/03/2005	POLYSILOXANE COATED METAL OXIDE PARTICLES	DSM IP ASSETS B. V.	02/11/2007	DELHI
14	263581	922/DELNP/2008	02/08/2006	04/08/2005	PRODUCT FOR PREVENTING MARINE BIOFOULING OF A SUBSTRATE	I TECH AB	27/06/2008	DELHI
15	263582	1506/DEL/2003	02/12/2003	11/12/2002	ARTICULATED STRAP WITH LINKS	ROLEX S.A.	30/12/2005	DELHI
16	263584	2116/DEL/2007	09/10/2007 15:11:58	10/10/2006	AIR BAG APPARATUS	TOYODA GOSEI CO., LTD.	06/06/2008	DELHI
17	263587	57/DELNP/2006	20/07/2004	28/07/2003	A PROCESS FOR THE PREPARATION OF A QUINAZOLIN-4-ONE DERIVATIVE	BTG INTERNATIONAL LIMITED	24/08/2007	DELHI
18	263588	10690/DELNP/2008	14/06/2007	27/06/2006	A FEMALE CONTRACEPTIVE FOR TRANSCERVICAL DELIVERY AND A PROCESS FOR PREPARATION THEREOF	SUJOY KUMAR GUHA	20/03/2009	DELHI
19	263589	6881/DELNP/2007	28/02/2006	07/03/2005	A METHOD FOR THE PRODUCTION OF A TRANSDERMAL THERAPEUTIC SYSTEM	LTS LOHMANN THERAPIE-SYSTEME AG	26/10/2007	DELHI
20	263590	5101/DELNP/2006	04/02/2005	05/02/2004	A PARTICULATE WATER ABSORBING AGENT	NIPPON SHOKUBAI CO., LTD.	13/07/2007	DELHI
21	263591	1759/DEL/2007	20/08/2007 12:25:57		A PROCESS FOR THE PREPARATION OF PROTEIN MEDIATED CALCIUM HYDROXYAPATITE (HAP) COATING ON METAL SUBSTRATES	COUNCIL OF SCIENTIFIC & INDUSTRIAL RESEARCH	03/04/2009	DELHI
22	263592	4296/DELNP/2008	23/11/2006	01/12/2005	PROCESS FOR PRODUCING 5-FLUORO-1,3-DIALKYL-1H-PYRAZOL-4-CARBONYL CHLORIDES	BAYER CROPSCIENCE AG	01/08/2008	DELHI
23	263593	5394/DELNP/2009	27/07/2007	07/03/2007	METHOD FOR PRODUCING LIGHT OLEFINS FORM METHANOL OR/AND DIMETHYL ETHER	DALIAN INSTITUTE OF CHEMICAL PHYSICS, CHINESE ACADEMY OF SCIENCES	23/04/2010	DELHI

24	263595	4011/DELNP/2004	04/10/2004	24/12/2003	PROCESS FOR PURIFYING (METH) ACRYLIC ACID AND PROCESS FOR PRODUCING (METH) ACRYLIC ESTERS	MITSUBISHI CHEMICAL CORPORATION	18/12/2009	DELHI

Publication Under Section 43(2) in Respect of the Grant

Following Patents have been granted and any person interested in opposing these patents under Section 25(2) may at any time within one year from the date of this issue, give notice to the Controller of Patents at the appropriate office, on the prescribed form-7 along with written statement and evidence, if any.

Serial Number	Patent Number	Application Number	Date of Application	Date of Priority	Title of Invention	Name of Patentee	Date of Publication of Abstract u/s 11(A)	Appropriate Office
1	263558	31/MUMNP/2011	27/09/2009	24/12/2008	A METHOD FOR PRODUCING CELLULOSIC ETHANOL	ANGELYEAST CO. LTD.	02/12/2011	MUMBAI
2	263560	1808/MUM/2006	30/10/2006		A PROCESS FOR THE PREPARATION OF ERYTHROPOIETIN	GENNOVA BIOPHARMACEUTICALS LTD.	18/07/2008	MUMBAI
3	263604	142/MUM/2009	22/01/2009		PHARMACEUTICAL COMPOSITIONS COMPRISING SEVELAMER CARBONATE	USV LIMITED	27/08/2010	MUMBAI

Publication Under Section 43(2) in Respect of the Grant

Following Patents have been granted and any person interested in opposing these patents under Section 25(2) may at any time within one year from the date of this issue, give notice to the Controller of Patents at the appropriate office, on the prescribed form-7 along with written statement and evidence, if any.

Serial Number	Patent Number	Application Number	Date of Application	Date of Priority	Title of Invention	Name of Patentee	Date of Publication of Abstract u/s 11(A)	Appropriate Office
1	263536	1138/CHE/2009	18/05/2009 14:25:16		NOVEL N-SPIRO SUBSTITUTED COMPOUNDS FOR THE TREATMENT OF EPILEPSY AND NEUROPATHIC PAIN	PERUMAL, YOGEESWARI,DHARMARAJAN, SRIRAM	21/08/2009	CHENNAI
2	263541	2532/CHE/2008	15/10/2008 16:47:35	15/10/2007	REVERSE OPENING TYPE SLIDE FASTENER	YKK CORPORATION	02/04/2010	CHENNAI
3	263542	5241/CHENP/2007	07/06/2006	09/06/2005	CANOPY DEVICE	SENZ TECHNOLOGIES B.V.,HOOGENDOORN, GERRIT	25/01/2008	CHENNAI
4	263543	521/CHE/2006	22/03/2006 15:59:16	22/03/2005	METHOD AND DEVICE FOR THE PRODUCTION OF CORE YARN	MASCHINENFABRIK RIETER AG	22/06/2007	CHENNAI
5	263544	499/CHE/2009	05/03/2009 16:58:46	07/03/2008	OMNIDIRECTIONALLY LOADABLE SYSTEM	TERAOKA SHOJI INC	11/09/2009	CHENNAI
6	263546	205/CHENP/2008	23/06/2006	14/07/2005	PIGMENT DISPERSIONS WITH POLYMERIC DISPERSANTS HAVING PENDING CHROMOPHORE GROUPS	AGFA GRAPHICS NV	19/09/2008	CHENNAI
7	263548	824/CHE/2009	08/04/2009 16:54:00	18/06/2008	FIBERGLASS PIPE-SHAPED INSULATOR AND METHOD OF MANUFACTURING THE SAME	SEWOON T&S CO., LTD.	25/12/2009	CHENNAI
8	263550	110/CHE/2006	24/01/2006		MECHATRONIC TEST RIG FOR ACTUATORS	INDIAN SPACE RESEARCH ORGANISATION	14/12/2007	CHENNAI
9	263552	4044/CHENP/2007	15/03/2006	17/03/2005	COMPOSITIONS OF ETHYLENE/ALPHA-OLEFIN MULTI-BLOCK INTERPOLYMER FOR BLOWN FILMS WITH HIGH HOT TACK	DOW GLOBAL TECHNOLOGIES,LLC	23/11/2007	CHENNAI
10	263553	4153/CHENP/2007	17/02/2006	22/02/2005	CUTTER HEAD FOR DREDGING SOIL AND METHOD FOR DREDGING BY MEANS OF THIS CUTTER HEAD	DREDGING INTERNATIONAL	16/11/2007	CHENNAI

11	263555	2/CHE/2008	01/01/2008		SPRING WIND OFF TOOL FOR A DIAPHRAGM TYPE SPRING BRAKE ACTUATOR OF THE AIR BRAKE SYSTEM OF A MOTOR VEHICLE	WABCO INDIA LIMITED	22/03/2013	CHENNAI
12	263559	1147/CHE/2006	03/07/2006 16:46:00	04/07/2005	PESTICIDAL COMPOSITION	SUMITOMO CHEMICAL COMPANY, LIMITED	22/06/2007	CHENNAI
13	263562	95/CHE/2007	17/01/2007 16:37:16	17/01/2006	HYBRID COMPONENTS CONTAINING REACTIVE HOTMELT ADHESIVES	DEGUSSA GMBH ,EVONIK DEGUSSA GMBH,EVONIK DEGUSSA GMBH	17/04/2009	CHENNAI
14	263566	1537/CHE/2006	28/08/2006 14:33:42		GIDDIED CRANK PIN DESIGN - I C ENGINE	R. PRAKASH URS	15/09/2006	CHENNAI
15	263571	4620/CHENP/2007	30/01/2006	17/03/2005	PSEUDO-BLOCK COPOLYMERS AND PROCESS EMPLOYING CHAIN SHUTTLING AGENT	DOW GLOBAL TECHNOLOGIES LLC	11/01/2008	CHENNAI
16	263576	6065/CHENP/2009	17/04/2008	19/04/2007	METHOD FOR PRODUCTION OF N-(2-AMINO-1,2-DICYANOVINYL) IMIDATES,	NIPPON SODA CO.,LTD	19/02/2010	CHENNAI
17	263577	4802/CHENP/2007	20/04/2006	28/04/2005	A COSMETIC COMPOSITION COMPRISING BENZOTRIAZOLE DERIVATIVES FOR PHOTOSTABILIZATION	CIBA HOLDING INC	25/01/2008	CHENNAI
18	263583	4240/CHENP/2007	03/04/2006	13/04/2005	METHOD OF PREPARING PRINT MEDIA AND PRINT MEDIUM	HEWLETT-PACKARD DEVELOPMENT COMPANY, L.P.	21/12/2007	CHENNAI
19	263586	2996/CHE/2007	14/12/2007	12/01/2007	IMAGE ENCODING DEVICE, IMAGE DECODING DEVICE, IMAGE ENCODING METHOD, AND IMAGE DECODING METHOD	MITSUBISHI ELECTRIC CORPORATION	11/09/2009	CHENNAI
20	263594	356/CHENP/2007	25/04/2005	29/09/2004	SYSTEM AND METHOD FOR SOLICITING FEEDBACK FROM AN AUDIENCE	HEWLETT-PACKARD DEVELOPMENT COMPANY, L.P.	24/08/2007	CHENNAI

Publication Under Section 43(2) in Respect of the Grant

Following Patents have been granted and any person interested in opposing these patents under Section 25(2) may at any time within one year from the date of this issue, give notice to the Controller of Patents at the appropriate office, on the prescribed form-7 along with written statement and evidence, if any.

Serial Number	Patent Number	Application Number	Date of Application	Date of Priority	Title of Invention	Name of Patentee	Date of Publication of Abstract u/s 11(A)	Appropriate Office
1	263530	1556/KOL/2007	16/11/2007	29/08/2007	A PHARMACEUTICAL COMPOSITION AND PROCESS THEREOF FOR THE PREPARATION OF PLANT EXTRACTS FOR TREATING SKIN DISORDERS AND ENHANCING HEALING OF WOUNDS	DEVELOPMENT CENTER FOR BIOTECHNOLOGY	10/04/2009	KOLKATA
2	263532	211/KOL/2007	09/02/2007 15:28:54		A PORTABLE EQUIPMENT FOR QUICK MEASUREMENT OF DIFFUSED REFLECTANCE OF TEXTURED SILICON WAFERS FOR SOLAR CELLS	BHARAT HEAVY ELECTRICALS LIMITED,	22/08/2008	KOLKATA
3	263535	4290/KOLNP/2009	02/06/2008	08/06/2007	FILTER MEDIA FOR FILTERING A FLUID STREAM	GORE ENTERPRISE HOLDINGS, INC.	16/04/2010	KOLKATA
4	263537	4023/KOLNP/2007	18/04/2006	20/04/2005	METHOD AND APPARATUS FOR SIGNALING AN AD-HOC GROUP OF MOBILE UITS	MOTOROLA SOLUTIONS, INC.	27/06/2008	KOLKATA
5	263538	1331/KOL/2008	06/08/2008	17/08/2007	A SOCKET STRUCTURE	SHENG-HSIN LIAO	01/05/2009	KOLKATA
6	263539	148/KOL/2007	01/02/2007 15:46:48	18/10/2006	MOBILE TERMINAL	LG ELECTRONICS INC.	16/05/2008	KOLKATA
7	263540	4722/KOLNP/2007	10/05/2006	10/06/2005	SYSTEM AND METHOD FOR ANALYZING POWER FLOW IN SEMICONDUCTOR PLASMA GENERATION SYSTEMS	BIRD TECHNOLOGIES GROUP INC.	04/07/2008	KOLKATA
8	263545	570/KOL/2008	20/03/2008		A NOVEL DESIGN APPROACH TO OPTIMISE THE MACHINE VENTILATION OF AIR COOLED GENERATOR STATORS	BHARAT HEAVY ELECTRICALS LIMITED	25/09/2009	KOLKATA
9	263547	2121/KOLNP/2007	16/12/2005	17/12/2004	ELECTRODE CATALYST FOR FUEL CELL	LG CHEM, LTD.	07/09/2007	KOLKATA

10	263549	4211/KOLNP/2007	28/04/2006	02/05/2005	BARRIER SYSTEM FOR THE LINE BUSHING OF AN ELECTRICAL INSTALLATION	SIEMENS AKTIENGESELLSCHAFT	04/04/2008	KOLKATA
11	263551	3770/KOLNP/2008	15/03/2007	29/03/2006	BUS TIE	SIEMENS AKTIENGESELLSCHAFT	27/02/2009	KOLKATA
12	263554	2123/KOL/2008	08/12/2008 13:53:49	14/12/2007	METHOD TO MAXIMIZE FUEL CELL VOLTAGE DURING START-UP	GM GLOBAL TECHNOLOGY OPERATIONS, INC.	26/06/2009	KOLKATA
13	263557	2850/KOLNP/2007	27/01/2006	28/01/2005	PROCESS AND APPARATUS FOR SYNTHESIZING A NANOPOWDER	TEKNA PLASMA SYSTEMS INC.	14/09/2007	KOLKATA
14	263564	3767/KOLNP/2008	18/08/2006	29/03/2006	REDUCED NUMBER OF CHANNELS DECODING	DOLBY INTERNATIONAL AB,KONINKLIJKE PHILIPS ELECTRONICS N.V.	27/02/2009	KOLKATA
15	263568	15/KOL/2004	09/01/2004	10/01/2003	CIRCULATING FLUIDIZED BED REACTOR	ALSTOM TECHNOLOGY LTD.	02/06/2006	KOLKATA
16	263569	IN/PCT/2002/00249/KOL	23/08/2000	31/08/1999	ADAPTIVE RF AMPLIFIER PRELIMITER	INTERDIGITAL TECHNOLOGY CORPORATION	03/02/2006	KOLKATA
17	263570	2650/KOLNP/2007	26/12/2005	11/01/2005	TONER, AND DEVELOPER, DEVELOPING APPARATUS, PROCESS CARTRIDGE, IMAGE FORMING APPARATUS AND IMAGE FORMING METHOD	RICOH COMPANY LTD.	31/08/2007	KOLKATA
18	263579	2303/KOLNP/2008	13/12/2006	13/12/2005	A METHOD OF RELAYING DATA IN A COMMUNICATION SYSTEM	LG ELECTRONICS INC.	16/01/2009	KOLKATA
19	263580	991/KOLNP/2007	03/02/2006	07/02/2005	METHOD OF PERFORMING CELL UPDATE PROCEDURE	LG ELECTRONICS, INC.	13/07/2007	KOLKATA
20	263585	3343/KOLNP/2006	17/05/2005	17/05/2004	BOOK HOLDER	BURNETT-EVANS HOLDINGS, INC.	15/06/2007	KOLKATA
21	263596	714/KOLNP/2007	24/08/2005	31/08/2004	MEDICAL EFFECTOR SYSTEM	ETHICON ENDO-SURGERY,INC.	13/07/2007	KOLKATA
22	263598	3672/KOLNP/2009	25/03/2008	26/04/2007	DECORATIVE BOARD	AICA KOGYO CO., LTD.	29/01/2010	KOLKATA
23	263599	3868/KOLNP/2006	27/05/2005	28/05/2004	INJECTION DEVICE	CILAG GMBH INTERNATIONAL,	22/06/2007	KOLKATA
24	263601	2022/KOLNP/2007	15/09/2005	25/11/2004	ELECTROSURGICAL APPARATUS FOR COAGULATIVE TREATMENTS THROUGH RADIOFREQUENCY	LED S.P.A.,CONSORZIO I.P.O.TE.S.I.	10/08/2007	KOLKATA

25	263602	458/KOLNP/2007	12/08/2005	13/08/2004	BEVERAGE DISPENSE FONT	SCOTTISH & NEWCASTLE PLC.	06/07/2007	KOLKATA
26	263608	1197/KOLNP/2007	05/10/2005	05/10/2004	GRIPPER TRANSPORT ELEMENT FOR A WEAVING MACHINE	PICANOL N.V.	20/07/2007	KOLKATA
27	263610	339/KOLNP/2007	30/06/2005	30/06/2004	DOUBLE-FUELLED TUBELESS BOILER WITH TWO COMBUSTION CHAMBERS.	OZCAN, ALI NIZAMI	06/07/2007	KOLKATA
28	263611	439/KOLNP/2007	16/08/2005	19/08/2004	A CONTACT LENS WITH PLURALITY OF CELLS	JOHNSON & JOHNSON VISION CARE, INC.	06/07/2007	KOLKATA

CONTINUED TO PART- 2

CONTINUED FROM PART- 1

INTRODUCTION

In view of the recent amendment made in the Designs (Amendment) Rules, 2008 with effect from 17/06/2008, Publication of the matter relating to Designs is being published in the Official Journal of The Patent Office. This Journal is being published on weekly basis on every Friday covering the various proceedings on Designs as required according to the provisions of under Rule 22, 25, 27 and 39 of the Design (Amendment) Rules, 2008. All the enquiries on this Official Journal and other information as required by the public should be addressed to the Controller General of Patents, Designs & Trade Marks. Suggestions and comments are requested from all quarters so that the content can be enriched.

THE DESIGNS ACT 2000
SECTION 30
DESIGN ASSIGNMENT

(01)

The Design stands in the name of RAKESH BHAVARLAL BAFNA registered under the Designs Act, 2000 has been assigned in the Register of Designs in the name as follows:-

Design No.	Class	Name
257423	07-02	MR. RAKESH BHAVARLAL BAFNA, MRS. KIRTI RAKESH BAFNA (PARTNERS) OF M/S. SUN INDUSTRIES., HAVING ITS OFFICE AT GALA NO. 6/7/8, VIJAY MHATRE INDUSTRIAL ESTATE, OPP. VARUN INDUSTRIES, CHINCHPADA, WALIV, VASAI (EAST), DIST: THANE-401 208

(02)

The Design stands in the name of M/S. NAYASA MULTIPLAST, registered under the Designs Act, 2000 has licensed his right to use and exploit the design in the Register of Designs in the name as follows:-

Design No.	Class	Name
256068	07-02	NAYASA SUPERPLAST, A PARTNERSHIP CONCERNED DULY REGISTERED UNDER THE PARTNERSHIP ACT, 1932 HAVING ADDRESS AT SURVEY NO. 370/2 (7), KACHIGAM, NANI DAMAN, DAMAN-396210 (UT) COMPRISING PARTNERS NAMELY MR. SACHIN SACHDEV AND MRS. MANASI SACHDEV

(03)

The Design stands in the name of SUN INTERNATIONAL registered under the Designs Act, 2000 has been assigned in the Register of Designs in the name as follows:-

Design No.	Class	Name
253121	07-02	MR. RAKESH BHAVARLAL BAFNA, MRS. KIRTI RAKESH BAFNA (PARTNERS) OF M/S. SUN INDUSTRIES., HAVING ITS OFFICE AT GALA NO. 6/7/8, VIJAY MHATRE INDUSTRIAL ESTATE, OPP. VARUN INDUSTRIES, CHINCHPADA, WALIV, VASAI (EAST), DIST: THANE-401 208

(04)

The Design stands in the name of VINOD KUMAR registered under the Designs Act, 2000 has been assigned in the Register of Designs in the name as follows:-

Design No.	Class	Name
238673	23-01	RAJESH KUMAR GUPTA, AN INDIAN NATIONAL, OF THE ADDRESS HOUSE NO. 2591, URBAN ESTATE, DUGRI PHASE-1, LUDHIANA-141006, PUNJAB

(05)

The Design stands in the name of VINOD KUMAR registered under the Designs Act, 2000 has been assigned in the Register of Designs in the name as follows:-

Design No.	Class	Name
240000	23-01	RAJESH KUMAR GUPTA, AN INDIAN NATIONAL, OF THE ADDRESS HOUSE NO. 2591, URBAN ESTATE, DUGRI PHASE-1, LUDHIANA-141006, PUNJAB

COPYRIGHT PUBLICATION

SL NO	REGISTERED DESIGN NUMBERS	RENEWED ON
1.	195738	21.10.2014
2.	182859	19.09.2014
3.	247630	17.10.2014
4.	247631	17.10.2014
5.	247632	17.10.2014
6.	247633	17.10.2014
7.	247634	17.10.2014
8.	247635	17.10.2014
9.	247636	17.10.2014
10.	247637	17.10.2014
11.	248545	17.10.2014
12.	248546	17.10.2014
13.	248547	17.10.2014
14.	248548	17.10.2014
15.	248549	17.10.2014
16.	248550	17.10.2014
17.	248551	17.10.2014
18.	194973	19.09.2014
19.	195108	29.10.2014
20.	195718	21.10.2014
21.	196157	29.10.2014
22.	196805	29.10.2014
23.	192868	21.10.2014
24.	190318	21.10.2014
25.	190541	21.10.2014

REGISTRATION OF DESIGNS

The following designs have been registered. They are now open for public inspection. In the following each entry the Date of Registration is shown. The Priority Number, Priority Date and Priority Country are also shown

DESIGN NUMBER	256642
CLASS	24-03
1)SAHAJANAND MEDICAL TECHNOLOGIES (P) LTD, AN INDIAN COMPANY, REGD. OFFICE AT SAHAJANAND ESTATE, WAKHARIAWADI, NEAR DABHOLI, VED ROAD, SURAT-395004, GUJARAT, INDIA	
DATE OF REGISTRATION	20/09/2013
TITLE	CORONARY STENT
PRIORITY NA	

DESIGN NUMBER	258637
CLASS	24-01
1)DEPUY (IRELAND), OF LOUGHBEG INDUSTRIAL ESTATE, RINGASKIDDY, CO CORK, IRELAND	
DATE OF REGISTRATION	09/12/2013
TITLE	SURGICAL HANDLE
PRIORITY	

PRIORITY NUMBER	DATE	COUNTRY
29/457, 179	07/06/2013	U.S.A.

DESIGN NUMBER	259468
CLASS	08-06
1)(1) MITESHBHAI B. PIPALIYA (2) HITESHBHAI M. PIPALIYA (3) JIGNESHBHAI B. HIRAPARA ALL INDIAN NATIONAL PARTNERS OF PATEL DIE CASTING AN INDIAN PARTNERSHIP FIRM HAVING ITS PRINCIPAL PLACE OF BUSINESS AT PATELNAGAR-4, OPP. SATYANARAYAN MILL, 80 FEET MAIN ROAD, RAJKOT, GUJARAT-INDIA	
DATE OF REGISTRATION	17/01/2014
TITLE	HANDLE
PRIORITY NA	

DESIGN NUMBER	255713
CLASS	24-99
1)DIRECTOR GENERAL DEFENCE RESEARCH & DEVELOPMENT ORGANISATION MINISTRY OF DEFENCE, GOVERNMENT OF INDIA, ROOM NO. 348, B-WING, DRDO BHAWAN, RAJAJI MARG, NEW DELHI-110105, INDIA, AN INDIAN ORGANISATION	
DATE OF REGISTRATION	07/08/2013
TITLE	MICE RESTRAINER
PRIORITY NA	

DESIGN NUMBER	259991
CLASS	12-16
1)TATA MOTORS LIMITED, AN INDIAN COMPANY OF BOMBAY HOUSE, 24 HOMI MODY STREET, HUTATMA CHOWK, MUMBAI 400001, MAHARASHTRA, INDIA	
DATE OF REGISTRATION	31/01/2014
TITLE	REAR BUMPER OF A VEHICLE
PRIORITY NA	

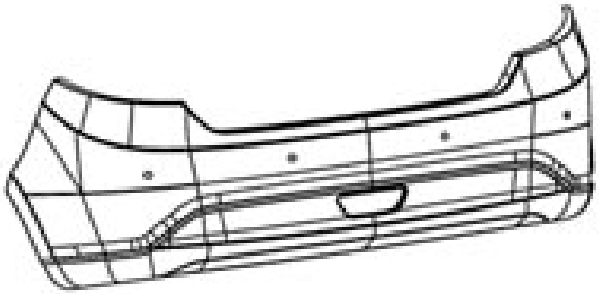

DESIGN NUMBER	262018
CLASS	05-05
1)M/S. BIBA APPARELS PRIVATE LIMITED, AN INDIAN PRIVATE LIMITED COMPANY INCORPORATED UNDER THE PROVISION OF THE COMPANIES ACT, 1956, AND HAVING ITS'S REGISTERED OFFICE AT RELIABLE HOUSE, SITUATED AT HANUMAN SILK MILL COMPOUND, KANJURMARG (WEST), OPP. HUMA MALL, MUMBAI-400 078 MAHARASHTRA, INDIA.	
DATE OF REGISTRATION	25/04/2014
TITLE	TEXTILE FABRIC
PRIORITY NA	

DESIGN NUMBER	258640
CLASS	02-04
1)VALENTINO S.P.A., A CORPORATION ORGANIZED AND EXISTING UNDER THE LAWS OF ITALY, OF VIA TURATI, 16/18, I-20121 MILANO, ITALY	
DATE OF REGISTRATION	09/12/2013
TITLE	SHOE

PRIORITY

PRIORITY NUMBER	DATE	COUNTRY
MI2013O000144	11/06/2013	ITALY

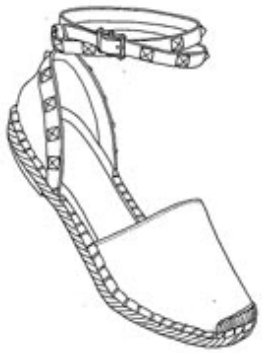

DESIGN NUMBER	259854
CLASS	09-01
1)RAJA FUN-FOODS PVT. LTD., A COMPANY INCORPORATED UNDER THE INDIAN COMPANIES ACT, AT 3/25, HAJI ALI PARK, CLARK ROAD, MUMBAI-400034, INDIA.	
DATE OF REGISTRATION	30/01/2014
TITLE	BOTTLE
PRIORITY NA	

DESIGN NUMBER	258360
CLASS	12-16
1)DAIMLER INDIA COMMERCIAL VEHICLES PRIVATE LIMITED, AN INDIAN COMPANY INCORPORATED UNDER THE LAWS OF INDIA, OF UNIT 201, 2ND FLOOR CAMPUS 3B, RMZ MILLENNIA BUSINESS PARK NO. 143, DR. MGR ROAD, PERUNGUDI, CHENNAI-600096, INDIA	
DATE OF REGISTRATION	25/11/2013
TITLE	PANEL FOR BUMPER OF VEHICLE

PRIORITY

PRIORITY NUMBER	DATE	COUNTRY
002244459-0003	27/05/2013	OHIM

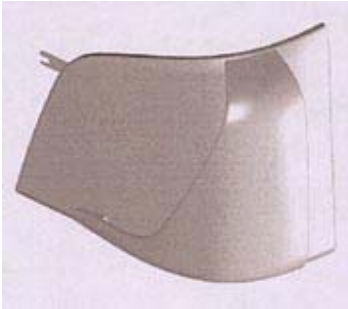

DESIGN NUMBER	256447	
CLASS	13-03	
1)AEROLITE INDUSTRIES OF GALA NO. 5, SATI INDUSTRIAL ESTATE, I.B.PATEL RAOD, GOREGAON (EAST), MUMBAI-400063, MAHARASHTRA, INDIA, INDIAN PARTNERSHIP FIRM, WHOSE PARTNERS ARE MANISH HANSRAJ GADA & HEENA MANOJ GADA, ALL INDIAN NATIONALS		
DATE OF REGISTRATION	13/09/2013	
TITLE	REGULATOR	
PRIORITY NA		

DESIGN NUMBER	259922	
CLASS	12-16	
1)TATA MOTORS LIMITED, AN INDIAN COMPANY OF BOMBAY HOUSE, 24 HOMI MODY STREET, HUTATMA CHOWK, MUMBAI 400001, MAHARASHTRA, INDIA		
DATE OF REGISTRATION	31/01/2014	
TITLE	SPOILER OF A VEHICLE	
PRIORITY NA		

DESIGN NUMBER	256658	
CLASS	24-02	
1)PFIZER LIMITED, A COMPANY INCORPORATED UNDER THE LAWS OF UNITED KINGDOM OF THE ADDRESS RAMSGATE ROAD, SANDWICH, KENT CT13 9NJ, UNITED KINGDOM		
DATE OF REGISTRATION	20/09/2013	
TITLE	INJECTOR USED FOR MEDICINAL/COSMETIC PURPOSES	

PRIORITY

PRIORITY NUMBER	DATE	COUNTRY
002211219-0001	28/03/2013	OHIM

DESIGN NUMBER	262019
CLASS	05-05
1)M/S. BIBA APPARELS PRIVATE LIMITED, AN INDIAN PRIVATE LIMITED COMPANY INCORPORATED UNDER THE PROVISION OF THE COMPANIES ACT, 1956, AND HAVING ITS'S REGISTERED OFFICE AT RELIABLE HOUSE, SITUATED AT HANUMAN SILK MILL COMPOUND, KANJURMARG (WEST), OPP. HUMA MALL, MUMBAI-400 078 MAHARASHTRA, INDIA.	
DATE OF REGISTRATION	25/04/2014
TITLE	TEXTILE FABRIC
PRIORITY NA	

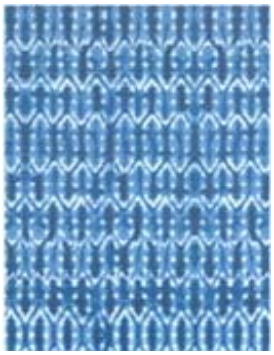

DESIGN NUMBER	256154
CLASS	07-04
1)MIRAMBICA ENTERPRISE, AN INDIAN PARTNERSHIP FIRM OF SURVEY NO. 85, PLOT NO. 4, B/H. PATEL COMPLEX, MAVDI BY PASS, MAVDI, RAJKOT-360004, GUJARAT, INDIA, WHOSE PARTNERS ARE (I) HARSUKHBHAI LILADHARBHAI TIMBADIYA, (II) VIMALBHAI MANJIBHAI CHOVATIYA, AND (III) RAMESHBHAI RAVJIBHAI VARSANI OF THE SAME ADDRESS, AN INDIAN NATIONAL	
DATE OF REGISTRATION	02/09/2013
TITLE	VEGETABLE CUTTER
PRIORITY NA	

DESIGN NUMBER	259477
CLASS	23-02
1)GEBERIT INTERNATIONAL AG SCHACHENSTRASSE 77, 8645 JONA, SWITZERLAND, A COMPANY OF SWITZERLAND	
DATE OF REGISTRATION	17/01/2014
TITLE	WATER CLOSET

PRIORITY

PRIORITY NUMBER	DATE	COUNTRY
750968201	19/07/2013	WIPO

DESIGN NUMBER	258196
CLASS	23-01
1)VICTAULIC COMPANY, A CORPORATION OF THE STATE OF NEW JERSEY, HAVING A PLACE OF BUSINESS AT 4901 KESSLERSVILLE ROAD, EASTON, PENNSYLVANIA 18040, UNITED STATES OF AMERICA	
DATE OF REGISTRATION	18/11/2013
TITLE	PIPE COUPLING SEGMENT

PRIORITY

PRIORITY NUMBER	DATE	COUNTRY
29/459,522	01/07/2013	U.S.A.

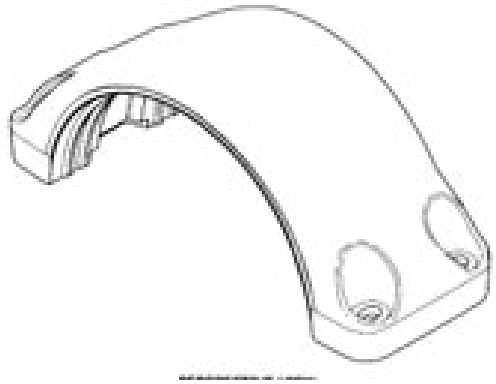

DESIGN NUMBER	254156
CLASS	24-02
1)DR. SATISH SRINIVAS KITAMBI AND DR. GAYATHRI CHANDRASHEKHAR, OF THE ADDRESS 10-2-311, PLOT 187, RD7, WESTMARREDPALLY, SECUNDERABAD-500026, ANDHRA PRADESH, INDIA	
DATE OF REGISTRATION	29/05/2013
TITLE	MICROINJECTION MOLD
PRIORITY NA	

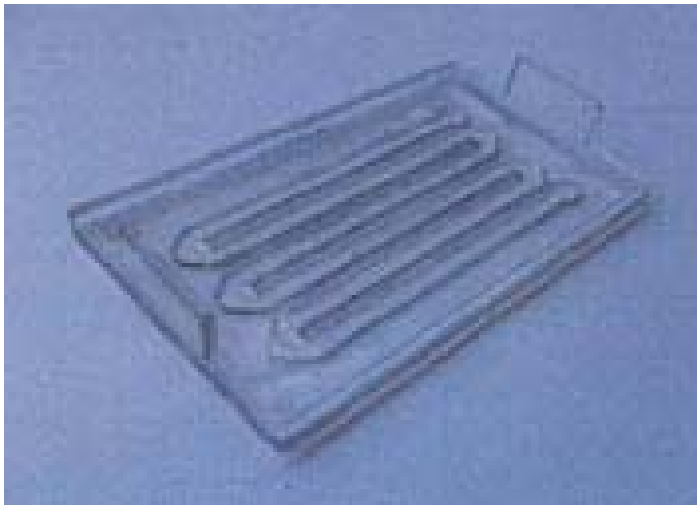

DESIGN NUMBER	259929
CLASS	12-16
1)TATA MOTORS LIMITED, AN INDIAN COMPANY OF BOMBAY HOUSE, 24 HOMI MODY STREET, HUTATMA CHOWK, MUMBAI 400 001, MAHARASHTRA, INDIA	
DATE OF REGISTRATION	31/01/2014
TITLE	TAILGATE PULL CAP OF A VEHICLE
PRIORITY NA	

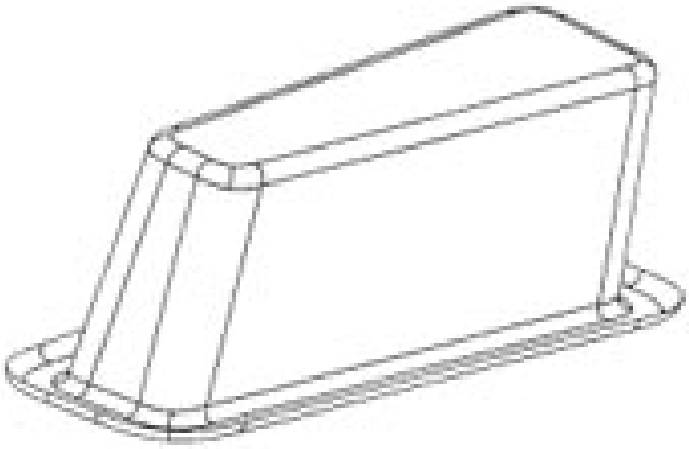

DESIGN NUMBER	259996	
CLASS	12-16	
1)TATA MOTORS LIMITED, AN INDIAN COMPANY OF BOMBAY HOUSE, 24 HOMI MODY STREET, HUTATMA CHOWK, MUMBAI 400 001, MAHARASHTRA, INDIA		
DATE OF REGISTRATION	31/01/2014	
TITLE	HEADLINER OF A VEHICLE	
PRIORITY NA		
DESIGN NUMBER	262021	
CLASS	05-05	
1)M/S. BIBA APPARELS PRIVATE LIMITED, AN INDIAN PRIVATE LIMITED COMPANY INCORPORATED UNDER THE PROVISION OF THE COMPANIES ACT, 1956, AND HAVING ITS'S REGISTERED OFFICE AT RELIABLE HOUSE, SITUATED AT HANUMAN SILK MILL COMPOUND, KANJURMARG (WEST), OPP. HUMA MALL, MUMBAI-400 078 MAHARASHTRA, INDIA.		
DATE OF REGISTRATION	25/04/2014	
TITLE	TEXTILE FABRIC	
PRIORITY NA		
DESIGN NUMBER	262088	
CLASS	28-03	
1)SATNAM SINGH NATIONALITY INDIAN TRADING AS TEXON INDUSTRIES (INDIAN) WHOES ADDRESS IS 150, SHAHZADA BAGH EXTN., INDUSTRIAL AREA, DELHI-110035 (INDIA)		
DATE OF REGISTRATION	28/04/2014	
TITLE	MASSAGER	
PRIORITY NA		

DESIGN NUMBER	258587
CLASS	24-02
1)DEPUY (IRELAND), OF LOUGHBEG INDUSTRIAL ESTATE, RINGASKIDDY, CO CORK, IRELAND	
DATE OF REGISTRATION	06/12/2013
TITLE	NOTCH CUTTING BLOCK FOR KNEE ARTHROPLASTY

PRIORITY

PRIORITY NUMBER	DATE	COUNTRY
29/457,173	07/06/2013	U.S.A.

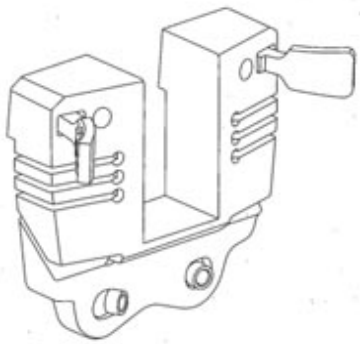

DESIGN NUMBER	258871
CLASS	13-01
1)INI POWER SYSTEMS, INC., OF 175, SOUTHPORT DRIVE, SUITE 100, MORRISVILLE NC 27560, UNITED STATES OF AMERICA, A US COMPANY	
DATE OF REGISTRATION	19/12/2013
TITLE	GAS ADAPTOR FOR ELECTRIC GENERATOR

PRIORITY

PRIORITY NUMBER	DATE	COUNTRY
29/462,050	30/07/2013	U.S.A.

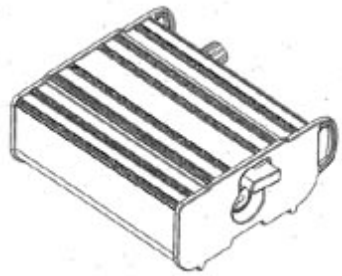

DESIGN NUMBER	259868
CLASS	15-99
1)SEJONG PHARMATECH CO., LTD., (CHEONGCHEON-DONG) 63, ANNAM-RO 402 BEONGIL, BUPYEONG-GU, INCHEON, 403-031 REPUBLIC OF KOREA, NATIONALITY: REPUBLIC OF KOREA	
DATE OF REGISTRATION	30/01/2014
TITLE	COMPRESSION MOLDING MACHINE FOR TABLETS

PRIORITY

PRIORITY NUMBER	DATE	COUNTRY
30-2013-0039922	01/08/2013	REPUBLIC OF KOREA

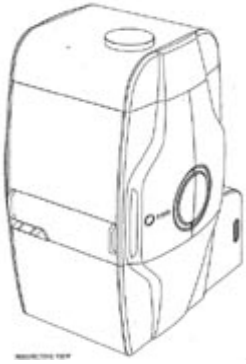

DESIGN NUMBER	259923	
CLASS	12-16	
1)TATA MOTORS LIMITED, AN INDIAN COMPANY OF BOMBAY HOUSE, 24 HOMI MODY STREET, HUTATMA CHOWK, MUMBAI 400001, MAHARASHTRA, INDIA		
DATE OF REGISTRATION	31/01/2014	
TITLE	SPOILER OF A VEHICLE	
PRIORITY NA		

DESIGN NUMBER	257680	
CLASS	12-16	
1)MITSUBA CORPORATION, A JAPANESE CORPORATION, WHOSE ADDRESS IS 2681, HIROSAWACHO 1-CHOME, KIRYU-SHI, GUNMA 376-85555, JAPAN		
DATE OF REGISTRATION	23/10/2013	
TITLE	WINDSHIELD WIPER FOR VEHICLE	
PRIORITY		

PRIORITY NUMBER	DATE	COUNTRY
2012-009335	25/04/2013	JAPAN

DESIGN NUMBER	262020	
CLASS	05-05	
1)M/S. BIBA APPARELS PRIVATE LIMITED, AN INDIAN PRIVATE LIMITED COMPANY INCORPORATED UNDER THE PROVISION OF THE COMPANIES ACT, 1956, AND HAVING ITS'S REGISTERED OFFICE AT RELIABLE HOUSE, SITUATED AT HANUMAN SILK MILL COMPOUND, KANJURMARG (WEST), OPP. HUMA MALL, MUMBAI-400 078 MAHARASHTRA, INDIA.		
DATE OF REGISTRATION	25/04/2014	
TITLE	TEXTILE FABRIC	
PRIORITY NA		

DESIGN NUMBER	256182
CLASS	26-04

1)PANASONIC CORPORATION,
OF 1006, OAZA KADOMA, KADOMA-SHI, OSAKA 571-8501, JAPAN

DATE OF REGISTRATION	03/09/2013
TITLE	LIGHT-EMITTING DIODE LAMP

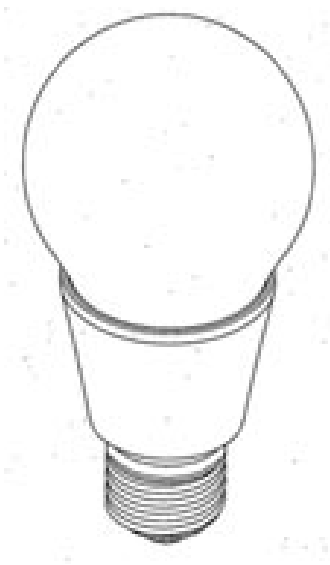

PRIORITY

PRIORITY NUMBER	DATE	COUNTRY
201330051981.9	04/03/2013	CHINA

DESIGN NUMBER	260944
CLASS	09-03

1)M/S. JIVO WELLNESS PVT. LTD., J-3/190, NEHRU MARKET, RAJOURI GARDEN, NEW DELHI-110027
THROUGH SH. GURPREET SINGH, SON OF SH. BAHADUR SINGH, AUTHORISED DIRECTOR

DATE OF REGISTRATION	13/03/2014
TITLE	CONTAINER

PRIORITY NA

DESIGN NUMBER	258870
CLASS	15-03

1)ISEKI & CO., LTD. A JAPANESE COMPANY
OF THE ADDRESS: 700 UMAKI-CHO, MATSUYAMA-SHI, EHIME-KEN, JAPAN

DATE OF REGISTRATION	19/12/2013
TITLE	COMBINE

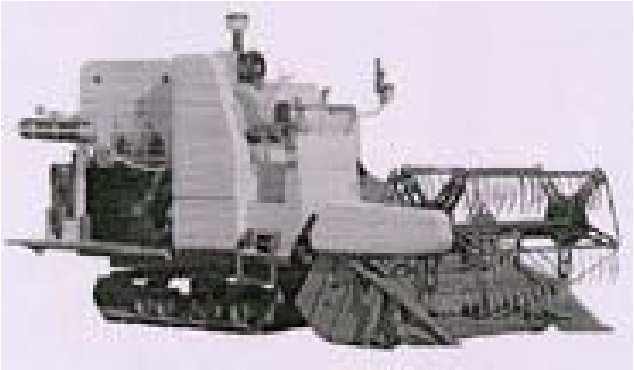

PRIORITY

PRIORITY NUMBER	DATE	COUNTRY
2013-023635	09/10/2013	JAPAN

DESIGN NUMBER	260740
CLASS	13-03
1)M/S GM MODULAR PVT. LTD., (A COMPANY INCORPORATED UNDER INDIAN COMPANIES ACT), 14/15, BOKADIA IND. ESTATE, SATIVALI ROAD, VASAI (EAST)-401208, DISTRICT-THANE, MAHARASHTRA (INDIA)	
DATE OF REGISTRATION	03/03/2014
TITLE	SWITCH BOARD PLATE
PRIORITY NA	

DESIGN NUMBER	254172
CLASS	20-02
1)DELAWARE CAPITAL FORMATION, INC., A COMPANY INCORPORATED IN USA HAVING ADDRESS AS 501 SILVERSIDE ROAD, SUITE 5 WILMINGTON, DELAWARE 19809, USA	
DATE OF REGISTRATION	29/05/2013
TITLE	FUEL DISPENSING NOZZLE

PRIORITY

PRIORITY NUMBER	DATE	COUNTRY
002145748-0002	30/11/2012	OHIM

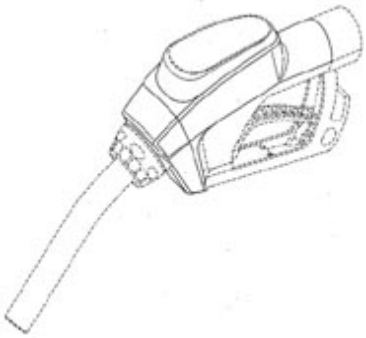

DESIGN NUMBER	260000
CLASS	12-11
1)HONDA MOTOR CO., LTD., A JAPANESE CORPORATION, OF 1-1, MINAMI-AOYAMA 2-CHOME, MINATO-KU, TOKYO, 107-8556 JAPAN	
DATE OF REGISTRATION	03/02/2014
TITLE	MOTOR SCOOTER

PRIORITY

PRIORITY NUMBER	DATE	COUNTRY
2013-018248	08/08/2013	JAPAN

DESIGN NUMBER	256662
CLASS	24-02
1)PFIZER LIMITED, A COMPANY INCORPORATED UNDER THE LAWS OF UNITED KINGDOM OF THE ADDRESS RAMSGATE ROAD, SANDWICH, KENT CT13 9NJ, UNITED KINGDOM	
DATE OF REGISTRATION	20/09/2013
TITLE	INJECTOR USED FOR MEDICINAL/COSMETIC PURPOSES
PRIORITY	

PRIORITY NUMBER	DATE	COUNTRY
002211219-0005	28/03/2013	OHIM

DESIGN NUMBER	262023
CLASS	05-05
1)M/S. BIBA APPARELS PRIVATE LIMITED, AN INDIAN PRIVATE LIMITED COMPANY INCORPORATED UNDER THE PROVISION OF THE COMPANIES ACT, 1956, AND HAVING ITS'S REGISTERED OFFICE AT RELIABLE HOUSE, SITUATED AT HANUMAN SILK MILL COMPOUND, KANJURMARG (WEST), OPP. HUMA MALL, MUMBAI-400 078 MAHARASHTRA, INDIA.	
DATE OF REGISTRATION	25/04/2014
TITLE	TEXTILE FABRIC
PRIORITY NA	

DESIGN NUMBER	262091
CLASS	06-11
1)JAIPUR RUGS COMPANY PVT. LTD., AN INDIAN COMPANY OF G-250, MANSAROVAR INDUSTRIAL AREA, JAIPUR-302020, RAJASTHAN, INDIA	
DATE OF REGISTRATION	28/04/2014
TITLE	CARPET
PRIORITY NA	

DESIGN NUMBER	258483
CLASS	12-16
1)NISSAN JIDOSHA KABUSHIKI KAISHA (ALSO TRADING AS NISSAN MOTOR CO., LTD.), A JAPANESE COMPANY, ORGANIZED AND EXISTING UNDER THE LAWS OF JAPAN OF NO. 2 TAKARACHO, KANAGAWA-KU, YOKOHAMA-SHI, KANAGAWA-KEN, JAPAN	
DATE OF REGISTRATION	29/11/2013
TITLE	BONNET FOR AUTOMOBILE

PRIORITY

PRIORITY NUMBER	DATE	COUNTRY
2013-012372	03/06/2013	JAPAN

DESIGN NUMBER	258589
CLASS	24-01
1)DEPUY (IRELAND), OF LOUGHBEG INDUSTRIAL ESTATE, RINGASKIDDY, CO CORK, IRELAND	
DATE OF REGISTRATION	06/12/2013
TITLE	FEMORAL CUTTING BLOCK FOR KNEE ARTHROPLASTY

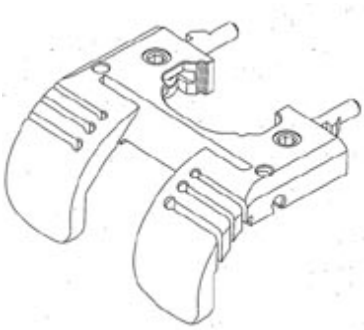

PRIORITY

PRIORITY NUMBER	DATE	COUNTRY
29/457,162	07/06/2013	U.S.A.

DESIGN NUMBER	258725
CLASS	09-07
1)MEADWESTVACO CALMAR NETHERLANDS B.V., OF ALBERT EINSTEINWEG 10, 5151 DL DRUNEN, THE NETHERLANDS	
DATE OF REGISTRATION	13/12/2013
TITLE	PUMP FOR POUCH TO DISPENSE LIQUID

PRIORITY

PRIORITY NUMBER	DATE	COUNTRY
29/457,911	13/06/2013	U.S.A.

DESIGN NUMBER	260744	
CLASS	13-03	
1)M/S GM MODULAR PVT. LTD., (A COMPANY INCORPORATED UNDER INDIAN COMPANIES ACT), 14/15, BOKADIA IND. ESTATE, SATIVALI ROAD, VASAI (EAST)-401208, DISTRICT-THANE, MAHARASHTRA (INDIA)		
DATE OF REGISTRATION	03/03/2014	
TITLE	MINIATURE CIRCUIT BREAKER SWITCH	
PRIORITY NA		

DESIGN NUMBER	255776	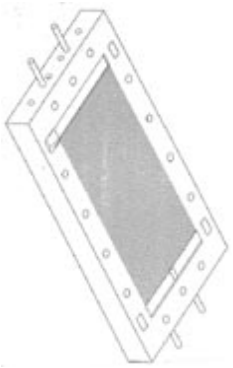
CLASS	13-02	
1)BHARAT HEAVY ELECTRICALS LIMITED, WITH ONE OF ITS REGIONAL OFFICES AT REGIONAL OPERATIONS DIVISION (ROD), PLOT NO. 9/1, DJ BLOCK, 3RD FLOOR, KARUNAMOYEE, SLAT LAKE CITY, KOLKATA-700091, HAVING ITS REGISTERED OFFICE AT BHEL HOUSE SIRI FORT, NEW DELHI-110049, INDIA, AN INDIAN COMPANY		
DATE OF REGISTRATION	12/08/2013	
TITLE	PRE-HEATING PLATE FOR PEM (PROTON EXCHANGE MEMBRANE) FUEL CELL	
PRIORITY NA		

DESIGN NUMBER	257632	
CLASS	09-03	
1)(1). DHAVAL H. PATEL, (2). BHUMIKA D. PATEL, (3). PRAKASH P. VARMORA AND (4). KALPESH A. PATEL., ALL INDIAN NATIONAL DIRECTORS OF VARMORA PLASTECH PVT. LTD., A COMPANY INCORPORATED UNDER THE COMPANIES ACT, 1956., HAVING ITS PRINCIPLE PLACE OF BUSINESS AT, PLOT NO. 3, SURVEY/BLOCK NO. 86, PO. VASNA CHACHARVADI, NR. DIVYA BHASKAR PRESS, BAVLA-CHANGODAR-AHMEDABAD HIGHWAY, TAL: SANAND, DIST: AHMEDABAD-382213. GUJARAT-INDIA		
DATE OF REGISTRATION	22/10/2013	
TITLE	CONTAINER	
PRIORITY NA		

DESIGN NUMBER	262022	
CLASS	05-05	
1)M/S. BIBA APPARELS PRIVATE LIMITED, AN INDIAN PRIVATE LIMITED COMPANY INCORPORATED UNDER THE PROVISION OF THE COMPANIES ACT, 1956, AND HAVING ITS'S REGISTERED OFFICE AT RELIABLE HOUSE, SITUATED AT HANUMAN SILK MILL COMPOUND, KANJURMARG (WEST), OPP. HUMA MALL, MUMBAI-400 078 MAHARASHTRA, INDIA.		
DATE OF REGISTRATION	25/04/2014	
TITLE	TEXTILE FABRIC	
PRIORITY NA		

DESIGN NUMBER	262090	
CLASS	06-11	
1)JAIPUR RUGS COMPANY PVT. LTD., AN INDIAN COMPANY OF G-250, MANSAROVAR INDUSTRIAL AREA, JAIPUR-302020, RAJASTHAN, INDIA		
DATE OF REGISTRATION	28/04/2014	
TITLE	CARPET	
PRIORITY NA		

DESIGN NUMBER	258588	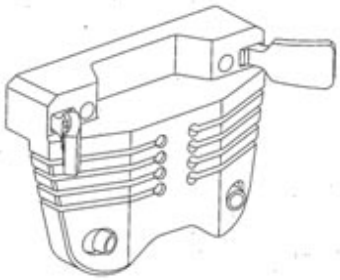
CLASS	24-02	
1)DEPUY (IRELAND), OF LOUGHBEG INDUSTRIAL ESTATE, RINGASKIDDY, CO CORK, IRELAND		
DATE OF REGISTRATION	06/12/2013	
TITLE	DISTAL CUTTING BLOCK FOR KNEE ARTHROPLASTY	

PRIORITY

PRIORITY NUMBER	DATE	COUNTRY
29/457,182	07/06/2013	U.S.A.

DESIGN NUMBER	258724
CLASS	09-07
1)MEADWESTVACO CALMAR NETHERLANDS B.V., OF ALBERT EINSTEINWEG 10, 5151 DL DRUNEN, THE NETHERLANDS	
DATE OF REGISTRATION	13/12/2013
TITLE	PUMP FOR POUCH TO DISPENSE LIQUID

PRIORITY

PRIORITY NUMBER	DATE	COUNTRY
29/457,911	13/06/2013	U.S.A.

DESIGN NUMBER	258592
CLASS	24-02
1)DEPUY (IRELAND), OF LOUGHBEG INDUSTRIAL ESTATE, RINGASKIDDY, CO CORK, IRELAND	
DATE OF REGISTRATION	06/12/2013
TITLE	ORTHOPAEDIC SURGICAL BROACH

PRIORITY

PRIORITY NUMBER	DATE	COUNTRY
29/457,174	07/06/2013	U.S.A.

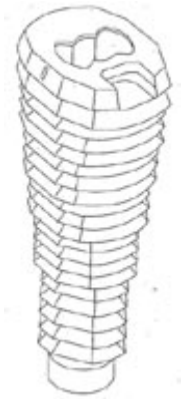

DESIGN NUMBER	262474
CLASS	19-06
1)FLAIR PENS LIMITED, AN INDIAN PARTNERSHIP FIRM OF 63, B/C, GOVT. INDUSTRIAL ESTATE, CHARKOP, KANDIVALI (W), MUMBAI - 400067, [MAHARASHTRA] INDIA	
DATE OF REGISTRATION	09/05/2014
TITLE	PEN
PRIORITY NA	

DESIGN NUMBER	255818
CLASS	11-01
1)CORE JEWELLERY PRIVATE LIMITED., (AN INDIAN PRIVATE LIMITED COMPANY REGISTERED UNDER THE INDIAN COMPANIES ACT, 1956), AT GJ-4, SDF-VII, SEEPZ, M.I.D.C., ANDHERI (EAST), MUMBAI-400096, MAHARASHTRA, INDIA	
DATE OF REGISTRATION	14/08/2013
TITLE	JEWELLERY
PRIORITY NA	

DESIGN NUMBER	244804
CLASS	23-99
1)CHANGWON ENVIRONMENT INDUSTRY CO. LTD. 416-2 EUJEUN-RI, JINYEONG-EUP, GIMHAE, GYEONGNAM 621-800, REPUBLIC OF KOREA	
DATE OF REGISTRATION	25/04/2012
TITLE	ELECTRO CELL FOR SEWAGE TREATMENT PLANT

PRIORITY

PRIORITY NUMBER	DATE	COUNTRY
30-2011-0046020	02/11/2011	REPUBLIC OF KOREA

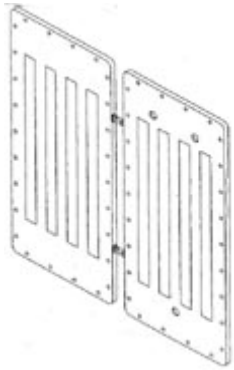

DESIGN NUMBER	260549
CLASS	11-01
1)KULTHIAA JEWEL PRIVATE LIMITED, AN INDIAN COMPANY OF 10, SAHA LANE, KOLKATA-700007, WEST BENGAL, INDIA	
DATE OF REGISTRATION	21/02/2014
TITLE	NECKLACE WITH EARRING ATTACHED SET
PRIORITY NA	

DESIGN NUMBER	258593
CLASS	24-01
1)DEPUY (IRELAND), OF LOUGHBEG INDUSTRIAL ESTATE, RINGASKIDDY, CO CORK, IRELAND	
DATE OF REGISTRATION	06/12/2013
TITLE	INTRAMEDULLARY SURGICAL INSTRUMENT

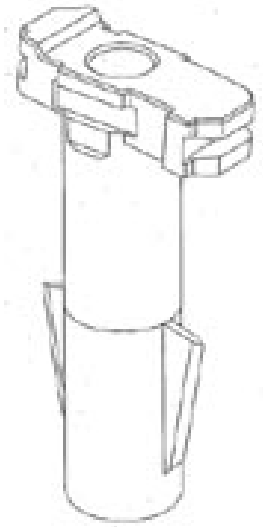

PRIORITY

PRIORITY NUMBER	DATE	COUNTRY
29/457,177	07/06/2013	U.S.A.

DESIGN NUMBER	260793
CLASS	12-11
1)ADVANCE PLASTIC INDUSTRIES, STATION ROAD, DHANDARI KALAN, LUDHIANA (PB.) INDIA, AN INDIAN NATIONAL	
DATE OF REGISTRATION	05/03/2014
TITLE	PADDLE FOR CYCLES

PRIORITY NA

DESIGN NUMBER	256531
CLASS	15-06
1)HAPPY 2 INNOVATE SOLUTIONS., (A LTD., LIABILITY PARTNERSHIP FIRM), AT 14 A, NISAR BHUVAN SLEATER ROAD, GRANT ROAD (WEST), MUMBAI-400007. MAHARASHTRA, INDIA. WHOSE PARTNERS ARE (1) RIDDHI CHOKHAWALA. (INDIAN NATIONAL) & (2) ANUJ CHAUDHARY (INDIAN NATIONAL) ALL ARE HAVING ABOVE ADDRESS	
DATE OF REGISTRATION	17/09/2013
TITLE	CUTTING MACHINE
PRIORITY NA	

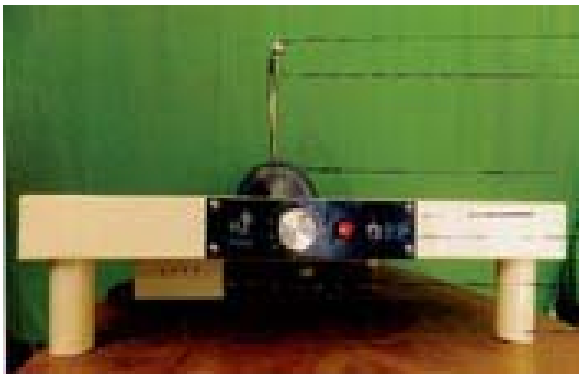

DESIGN NUMBER	259294
CLASS	26-02
1)EVEREADY INDUSTRIES INDIA LTD. 1, MIDDLETON STREET, KOLKATA-700 071, WEST BENGAL, INDIA, AN INDIAN COMPANY	
DATE OF REGISTRATION	07/01/2014
TITLE	LANTERN
PRIORITY NA	

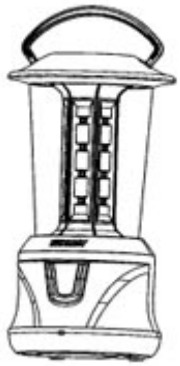

DESIGN NUMBER	262096
CLASS	06-11
1)JAIPUR RUGS COMPANY PVT. LTD., AN INDIAN COMPANY OF G-250, MANSAROVAR INDUSTRIAL AREA, JAIPUR-302020, RAJASTHAN, INDIA	
DATE OF REGISTRATION	28/04/2014
TITLE	CARPET
PRIORITY NA	

DESIGN NUMBER	254455
CLASS	24-01
1)KONINKLIJKE PHILIPS N.V., A COMPANY ORGANIZED AND EXISTING UNDER THE LAWS OF THE KINGDOM OF THE NETHERLANDS, RESIDING AT EINDHOVEN, WHOSE POST-OFFICE ADDRESS IS HIGH TECH CAMPUS 5, 5656 AE EINDHOVEN, THE NETHERLANDS	
DATE OF REGISTRATION	12/06/2013
TITLE	MEDICAL SCANNER ASSEMBLY

PRIORITY

PRIORITY NUMBER	DATE	COUNTRY
002155341-0001	18/12/2012	OHIM

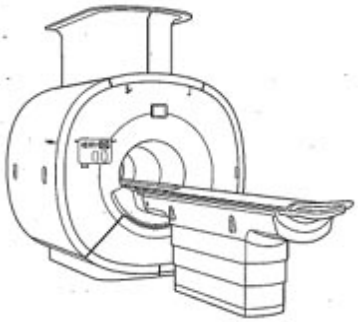

DESIGN NUMBER	259875
CLASS	23-04
1)PRADEEPKUMAR NANDLAL DHOOT, INDIAN NATIONAL OF GANGAPURWALA, 2275 ADAT BAZAR, AHMEDNAGAR-414001, MAHARASHTRA, INDIA	
DATE OF REGISTRATION	31/01/2014
TITLE	COOLER
PRIORITY NA	

DESIGN NUMBER	262093
CLASS	06-11
1)JAIPUR RUGS COMPANY PVT. LTD., AN INDIAN COMPANY OF G-250, MANSAROVAR INDUSTRIAL AREA, JAIPUR-302020, RAJASTHAN, INDIA	
DATE OF REGISTRATION	28/04/2014
TITLE	CARPET
PRIORITY NA	

DESIGN NUMBER	258744
CLASS	06-01
1)ETIHAD AIRWAYS, A PRIVATE JOINT STOCK COMPANY ORGANIZED UNDER THE LAWS OF THE UAE, PO BOX 35566, NEW AIRPORT ROAD, ABU DHABI, UNITED ARAB EMIRATES	
DATE OF REGISTRATION	16/12/2013
TITLE	HEADREST FOR VEHICLE SEATS

PRIORITY

PRIORITY NUMBER	DATE	COUNTRY
002270918-0001	09/07/2013	EUROPEAN UNION

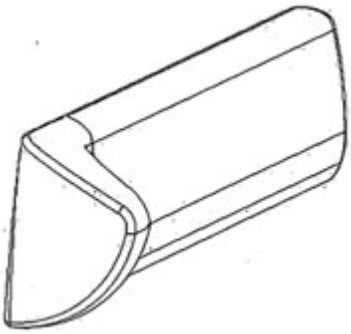

DESIGN NUMBER	260747
CLASS	13-03
1)M/S GM MODULAR PVT. LTD., (A COMPANY INCORPORATED UNDER INDIAN COMPANIES ACT), 14/15, BOKADIA IND. ESTATE, SATIVALI ROAD, VASAI (EAST)-401208, DISTRICT-THANE, MAHARASHTRA (INDIA)	
DATE OF REGISTRATION	03/03/2014
TITLE	DISTRIBUTION BOX
PRIORITY NA	

DESIGN NUMBER	260791
CLASS	12-11
1)ADVANCE PLASTIC INDUSTRIES, STATION ROAD, DHANDARI KALAN, LUDHIANA (PB.) INDIA, AN INDIAN NATIONAL	
DATE OF REGISTRATION	05/03/2014
TITLE	PADDLE FOR CYCLES
PRIORITY NA	

DESIGN NUMBER	259364
CLASS	09-03
1)PEPSICO, INC., INCORPORATED IN NORTH CAROLINA OF 700 ANDERSON HILL ROAD, PURCHASE, NEW YORK 10577, UNITED STATES OF AMERICA	
DATE OF REGISTRATION	13/01/2014
TITLE	POD

PRIORITY

PRIORITY NUMBER	DATE	COUNTRY
29/460,539	11/07/2013	U.S.A.

DESIGN NUMBER	262472
CLASS	19-06
1)FLAIR PENS LIMITED, AN INDIAN PARTNERSHIP FIRM OF 63, B/C, GOVT. INDUSTRIAL ESTATE, CHARKOP, KANDIVALI (W), MUMBAI - 400067, [MAHARASHTRA] INDIA	
DATE OF REGISTRATION	09/05/2014
TITLE	PEN
PRIORITY NA	

DESIGN NUMBER	256538
CLASS	12-11
1)TVS MOTOR COMPANY LIMITED, AN INDIAN COMPANY INCORPORATED UNDER THE COMPANIES ACT, 1956, HAVING ITS REGISTERED OFFICE AT JAYALAKSHMI ESTATES 29 (OLD NO. 8) HADDOWS ROAD, CHENNAI 600006, TAMIL NADU, INDIA	
DATE OF REGISTRATION	17/09/2013
TITLE	UTILITY BOX FOR SCOOTER
PRIORITY NA	

DESIGN NUMBER	253465
CLASS	28-03
1)RELIANCE RETAIL LIMITED, 3RD FLOOOR, COURT HOUSE, DHOBI TALAO, L. T. MARG, MUMBAI- 400 002, INDIA, AN INDIAN COMPANY	
DATE OF REGISTRATION	26/04/2013
TITLE	MACHINE FOR LIQUID VAPORIZER
PRIORITY NA	

DESIGN NUMBER	252907
CLASS	15-03
1)JAN VIKAS SANSTHAN (CHIRBATIYA), OFFICE & P.O. CHIRBATIYA, VIA TILWADA-246475 DISTT, TEHRI GARHWAL, UTTARANCHAL	
DATE OF REGISTRATION	04/04/2013
TITLE	PLOUGH
PRIORITY NA	

DESIGN NUMBER	259295
CLASS	26-02
1)EVEREADY INDUSTRIES INDIA LTD. 1, MIDDLETON STREET, KOLKATA-700071, WEST BENGAL, INDIA, AN INDIAN COMPANY	
DATE OF REGISTRATION	07/01/2014
TITLE	LAMP
PRIORITY NA	

DESIGN NUMBER	258492
CLASS	24-02
1)HTL-STREFA SPÓLKA AKCYJNA, ADAMÓWEK 7, PL 95-035 OZORKÓW, POLAND, NATIONALITY-POLAND	
DATE OF REGISTRATION	29/11/2013
TITLE	LANCET

PRIORITY

PRIORITY NUMBER	DATE	COUNTRY
002283275-0003	30/07/2013	OHIM

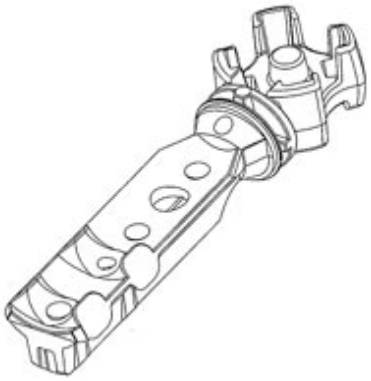

DESIGN NUMBER	258982	
CLASS	10-05	
1)UNIVERSAL DESIGNOVATION LAB LLP, (LIMITED LIABILITY PARTNERSHIP FIRM OF MR. BHAVIN R. DABHI AND MR. BHAGVANJI M. SONAGRA) OF THE ADDRESS 27-AJANTA PARK, UNIVERSITY ROAD, RAJKOT-360005, GUJARAT, INDIA AND INSTRUMEX, (PROPRIETORSHIP FIRM, OF MR. R. G. KUMAWAT) OF THE ADDRESS 106, ASHISH UDHYOG BHAVAN, OPP SNDT COLLEGE, LIBERTY GARDEN, MALAD WEST, MUMBAI-400064, INDIA		
DATE OF REGISTRATION	24/12/2013	
TITLE	AIR MONITORING EQUIPMENT	
PRIORITY NA		
DESIGN NUMBER	259543	
CLASS	26-04	
1)SHEHZAD ALI AN INDIAN NATIONAL, TRADING AS M/S. S. A. PRODUCTS, HAKEEM JI HOUSE, KACHCHA BAGH, MORADABAD, U.P.		
DATE OF REGISTRATION	20/01/2014	
TITLE	OIL LAMP	
PRIORITY NA		
DESIGN NUMBER	259962	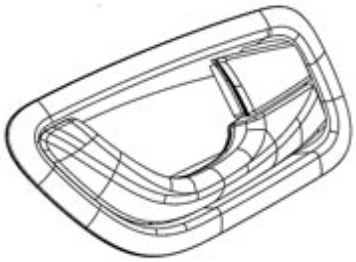
CLASS	12-16	
1)TATA MOTORS LIMITED, AN INDIAN COMPANY OF BOMBAY HOUSE, 24 HOMI MODY STREET, HUTATMA CHOWK, MUMBAI 400001, MAHARASHTRA, INDIA		
DATE OF REGISTRATION	31/01/2014	
TITLE	DOOR HANDLE OF A VEHICLE	
PRIORITY NA		

DESIGN NUMBER	256280
CLASS	09-01

1)GLAXO GROUP LIMITED,
980 GREAT WEST ROAD, BRENTFORD, MIDDLESEX, TW89GS, UNITED KINGDOM

DATE OF REGISTRATION	06/09/2013
TITLE	BOTTLE

PRIORITY

PRIORITY NUMBER	DATE	COUNTRY
4030029	22/05/2013	U.K.

DESIGN NUMBER	259724
CLASS	26-06

1)FORD GLOBAL TECHNOLOGIES, LLC A COMPANY ORGANIZED AND EXISTING UNDER THE LAWS OF UNITED STATES OF AMERICA, HAVING ITS OFFICE AT
330 TOWN CENTER DRIVE, SUITE 800, DEARBORN MICHIGAN-48126, UNITED STATES OF AMERICA

DATE OF REGISTRATION	27/01/2014
TITLE	VEHICLE HEAD LAMP LENS

PRIORITY

PRIORITY NUMBER	DATE	COUNTRY
201330380557.9	09/08/2013	CHINA

DESIGN NUMBER	255897
CLASS	09-01

1)PEPSICO, INC., INCORPORATED IN NORTH CAROLINA OF
700 ANDERSON HILL ROAD, PURCHASE, NEW YORK 10577, UNITED STATES OF AMERICA

DATE OF REGISTRATION	19/08/2013
TITLE	DISPENSER

PRIORITY

PRIORITY NUMBER	DATE	COUNTRY
29/446,006	19/02/2013	U.S.A.

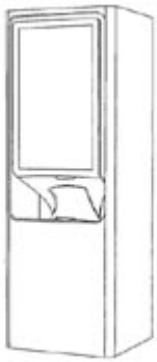

DESIGN NUMBER	237806
CLASS	14-01

1)APPLE INC.,
1 INFINITE LOOP, CUPERTINO, CALIFORNIA 95014, USA.

DATE OF REGISTRATION	04/07/2011
TITLE	PORTABLE DISPLAY DEVICE

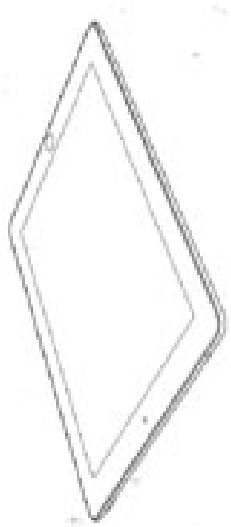

PRIORITY

PRIORITY NUMBER	DATE	COUNTRY
29/382, 846	07/01/2011	U.S.A.

DESIGN NUMBER	256325
CLASS	29-02

1)MAVIG GMBH, A COMPANY ORGANIZED AND EXISTING UNDER THE LAWS OF GERMANY, OF THE ADDRESS
STAHLGRUBERRING 5, 81829 MÜNCHEN, GERMANY

DATE OF REGISTRATION	09/09/2013
TITLE	DEVICE FOR PROTECTION AGAINST X-RAYS

PRIORITY

PRIORITY NUMBER	DATE	COUNTRY
002201202-0005	12/03/2013	EUROPEAN UNION

DESIGN NUMBER	258609
CLASS	06-01

1)HERMAN MILLER, INC., A CORPORATION ORGANIZED AND EXISTING UNDER THE LAWS OF THE STATE OF MICHIGAN, UNITED STATES OF AMERICA,
OF 855 EAST MAIN AVENUE, ZEELAND, MICHIGAN 49464, UNITED STATES OF AMERICA

DATE OF REGISTRATION	06/12/2013
TITLE	CHAIR

PRIORITY

PRIORITY NUMBER	DATE	COUNTRY
29/457,262	07/06/2013	U.S.A.

DESIGN NUMBER	258799
CLASS	07-02
1)LA TERMOPLASTIC F.B.M. S.R.L., A COMPANY ORGANIZED UNDER LAW OF THE ITALIAN REPUBLIC OF VIA DEL TORNAGO Z.I.-21010 ARSAGO SEPRIO, (VA), ITALY	
DATE OF REGISTRATION	17/12/2013
TITLE	COOKWARE HANDLE
PRIORITY	

PRIORITY NUMBER	DATE	COUNTRY
002258483	19/06/2013	OHIM

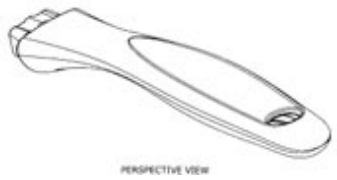

DESIGN NUMBER	258894
CLASS	12-08
1)HONDA MOTOR CO. LTD., A JAPANESE CORPORATION, OF 1-1, MINAMI-AOYAMA 2-CHOME, MINATO-KU, TOKYO, 107-8556 JAPAN	
DATE OF REGISTRATION	20/12/2013
TITLE	CAR
PRIORITY	

PRIORITY NUMBER	DATE	COUNTRY
2013-014747	28/06/2013	JAPAN

DESIGN NUMBER	259727
CLASS	12-16
1)FORD GLOBAL TECHNOLOGIES, LLC A COMPANY ORGANIZED AND EXISTING UNDER THE LAWS OF UNITED STATES OF AMERICA, HAVING ITS OFFICE AT 330 TOWN CENTER DRIVE, SUITE 800, DEARBORN MICHIGAN-48126, UNITED STATES OF AMERICA	
DATE OF REGISTRATION	27/01/2014
TITLE	VEHICLE FENDER
PRIORITY	

PRIORITY NUMBER	DATE	COUNTRY
201330380413.3	09/08/2013	CHINA

DESIGN NUMBER	250859
CLASS	12-16

1)FORD GLOBAL TECHNOLOGIES, LLC A COMPANY ORGANIZED AND EXISTING UNDER THE LAWS OF UNITED STATES OF AMERICA, HAVING ITS OFFICE AT
SUITE 800, 330 TOWN CENTER DRIVE, DEARBORN MICHIGAN-48126, UNITED STATES OF AMERICA

DATE OF REGISTRATION	08/01/2013
TITLE	VEHICLE FRONT LOWER GRILLE

PRIORITY

PRIORITY NUMBER	DATE	COUNTRY
402012100596.0	02/08/2012	GERMANY

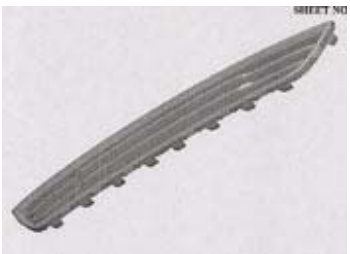

DESIGN NUMBER	256011
CLASS	13-99

1)FIRST SOLAR, INC. A CORPORATION ORGANIZED UNDER THE LAWS OF THE STATE OF DELAWARE OF
28101 CEDAR PARK BOULEVARD, PERRYSBURG, OHIO 43551, UNITED STATES OF AMERICA

DATE OF REGISTRATION	23/08/2013
TITLE	PHOTOVOLTAIC DEVICE

PRIORITY

PRIORITY NUMBER	DATE	COUNTRY
29/448,533	13/03/2013	U.S.A.

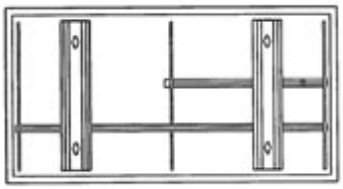

DESIGN NUMBER	258610
CLASS	06-01

1)HERMAN MILLER, INC., A CORPORATION ORGANIZED AND EXISTING UNDER THE LAWS OF THE STATE OF MICHIGAN, UNITED STATES OF AMERICA,
OF 855 EAST MAIN AVENUE, ZEELAND, MICHIGAN 49464, UNITED STATES OF AMERICA

DATE OF REGISTRATION	06/12/2013
TITLE	CHAIR

PRIORITY

PRIORITY NUMBER	DATE	COUNTRY
29/457,262	07/06/2013	U.S.A.

DESIGN NUMBER	258683
CLASS	23-99
1)COUNCIL OF SCIENTIFIC AND INDUSTRIAL RESEARCH, RAFI MARG, NEW DELHI-110001, INDIA, AN INDIAN REGISTERED BODY INCORPORATED UNDER THE REGISTRATION OF SOCIETIES ACT (ACT XXI OF 1860)	
DATE OF REGISTRATION	11/12/2013
TITLE	REACTOR FOR INTENSIFICATION OF FAST & EXOTHERMIC CHEMICAL REACTIONS
PRIORITY NA	

DESIGN NUMBER	258910
CLASS	19-06
1)TSUKASA FELT SHOJI CO., LTD., OF 11-8 SHIMBASHI, 3-CHOME, MINATO-KU, TOKYO, JAPAN	
DATE OF REGISTRATION	23/12/2013
TITLE	PEN NIB

PRIORITY

PRIORITY NUMBER	DATE	COUNTRY
2013-014213	24/06/2013	JAPAN

DESIGN NUMBER	258990
CLASS	24-04
1)THE PROCTER & GAMBLE COMPANY, A BODY CORPORATE INCORPORATED UNDER THE LAWS OF UNITED STATES OF AMERICA HAVING ITS REGISTERED OFFICE AT ONE PROCTER & GAMBLE PLAZA, CINCINNATI, OHIO - 45202, UNITED STATES OF AMERICA	
DATE OF REGISTRATION	24/12/2013
TITLE	SANITARY NAPKIN

PRIORITY

PRIORITY NUMBER	DATE	COUNTRY
29/458,939	25/06/2013	U.S.A.

DESIGN NUMBER	259547
CLASS	05-06

1)LG HAUSYS, LTD., A COMPANY DULY ORGANIZED AND EXISTING UNDER THE LAWS OF RUPUBLIC OF KOREA OF
ONE IFC BUILDING, 10 GUKJEGEUMYUNG-RO, YEONGDEUNGPO-GU, SEOUL, REPUBLIC OF KOREA

DATE OF REGISTRATION	20/01/2014
TITLE	FILM FOR DECORATION PURPOSES

PRIORITY

PRIORITY NUMBER	DATE	COUNTRY
30-2013-0038770	26/07/2013	REPUBLIC OF KOREA

DESIGN NUMBER	259825
CLASS	12-11

1)BAJAJ AUTO LIMITED, AN INDIAN COMPANY, INCORPORATED UNDER THE COMPANIES ACT OF 1956, HAVING ITS PRINCIPAL PLACE OF BUSINESS AT NEW 2ND & 3RD FLOOR, KHIVRAJ BUILDING, NO. 616, ANNASALAI, CHENNAI - 600006, STATE OF TAMIL NADU, INDIA, AND REGISTERED OFFICE AT
AKURDI, PUNE-411035, STATE OF MAHARASHTRA, INDIA

DATE OF REGISTRATION	29/01/2014
TITLE	MOTORCYCLE

PRIORITY NA

DESIGN NUMBER	250956
CLASS	12-08

1)FORD GLOBAL TECHNOLOGIES, LLC A COMPANY ORGANIZED AND EXISTING UNDER THE LAWS OF UNITED STATES OF AMERICA, HAVING ITS OFFICE AT
SUITE 800, 330 TOWN CENTER DRIVE, DEARBORN MICHIGAN-48126, UNITED STATES OF AMERICA

DATE OF REGISTRATION	11/01/2013
TITLE	VEHICLE

PRIORITY

PRIORITY NUMBER	DATE	COUNTRY
402012100598.7	02/08/2012	GERMANY

DESIGN NUMBER	254969
CLASS	15-03
1)ISEKI & CO., LTD. A JAPANESE COMPANY OF THE ADDRESS: 700 UMAKI-CHO, MATSUYAMA-SHI, EHIME-KEN, JAPAN	
DATE OF REGISTRATION	03/07/2013
TITLE	COMBINE HARVESTER

PRIORITY

PRIORITY NUMBER	DATE	COUNTRY
2013-000328	10/01/2013	JAPAN

DESIGN NUMBER	252207
CLASS	15-05
1)SATA GMBH & CO. KG, OF DOMERTALSTRASSE 20, 70806 KORNWESTHEIM, DEUTSCHLAND, GERMANY, GERMAN COMPANY	
DATE OF REGISTRATION	07/03/2013
TITLE	CLEANSING INSTRUMENT

PRIORITY

PRIORITY NUMBER	DATE	COUNTRY
002099069-0001	07/09/2012	OHIM

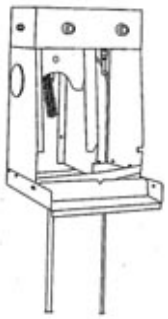

DESIGN NUMBER	261095
CLASS	14-01
1)BANG & OLUFSEN A/S, A DANISH PUBLIC LIMITED COMPANY OF THE ADDRESS PETER BANGS VEJ 15, 7600 STRUER, DENMARK	
DATE OF REGISTRATION	19/03/2014
TITLE	LOUDSPEAKER

PRIORITY

PRIORITY NUMBER	DATE	COUNTRY
DA 2013 00066	20/09/2013	DENMARK

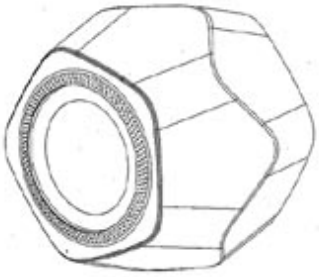

DESIGN NUMBER	259753	
CLASS	12-16	
1)HERO MOTOCORP LIMITED, AN INDIAN COMPANY INCORPORATED UNDER THE COMPANIES ACT, HAVING ITS OFFICE AT 34, COMMUNITY CENTRE, BASANT LOK, VASANT VIHAR, NEW DELHI-110057		
DATE OF REGISTRATION	28/01/2014	
TITLE	HEAD LIGHT LENS FOR A TWO WHEELED VEHICLE	
PRIORITY NA		

DESIGN NUMBER	256407	
CLASS	03-01	
1)DHARAMPAL SATYAPAL SONS PVT. LTD A COMPANY INCORPORATED UNDER THE INDIAN COMPANIES ACT, 1956, INDIAN COMPANY, A-85/86, SECTOR-02, NOIDA-201301, U.P.		
DATE OF REGISTRATION	13/09/2013	
TITLE	LIGHTER CASE	
PRIORITY NA		

DESIGN NUMBER	252208	
CLASS	15-05	
1)SATA GMBH & CO. KG, OF DOMERTALSTRASSE 20, 70806 KORNWESTHEIM, DEUTSCHLAND, GERMANY, GERMAN COMPANY		
DATE OF REGISTRATION	07/03/2013	
TITLE	CLEANSING INSTRUMENT	
PRIORITY		

PRIORITY NUMBER	DATE	COUNTRY
002098962-0001	07/09/2012	OHIM

DESIGN NUMBER	259112
CLASS	15-99
1)1. KYB-YS CO., LTD. 9165, SAKAKI, SAKAKI-MACHI, HANISHINA-GUN, NAGANO 3890688, JAPAN, NATIONALITY: JAPANESE, 2. KAYABA INDUSTRY CO., LTD. WORLD TRADE CENTER BLDG., 4-1, HAMAMATSU-CHO 2-CHOME, MINATO-KU, TOKYO 1056111, JAPAN, NATIONALITY: JAPANESE	
DATE OF REGISTRATION	30/12/2013
TITLE	FLUID PRESSURE ACTUATOR

PRIORITY

PRIORITY NUMBER	DATE	COUNTRY
2013-15449	05/07/2013	JAPAN

DESIGN NUMBER	259551
CLASS	13-02
1)SUBODH GUPTA, OKAYA POWER LTD., D-7, UDYOG NAGAR, ROHTAK ROAD, NEW DELHI-110041, (INDIAN)	
DATE OF REGISTRATION	21/01/2014
TITLE	BATTERY TERMINAL CAP
PRIORITY NA	

DESIGN NUMBER	250955
CLASS	12-08
1)FORD GLOBAL TECHNOLOGIES, LLC A COMPANY ORGANIZED AND EXISTING UNDER THE LAWS OF UNITED STATES OF AMERICA, HAVING ITS OFFICE AT SUITE 800, 330 TOWN CENTER DRIVE, DEARBORN MICHIGAN-48126, UNITED STATES OF AMERICA	
DATE OF REGISTRATION	11/01/2013
TITLE	VEHICLE

PRIORITY

PRIORITY NUMBER	DATE	COUNTRY
402012100598.7	02/08/2012	GERMANY

DESIGN NUMBER	260560
CLASS	09-01

1)PEARL POLYMERS LIMITED, OF
A-97/2, OKHLA INDUSTRIAL AREA, PHASE 2, NEW DELHI-110020, INDIA, A COMPANY INCORPORATED UNDER THE COMPANIES ACT, 1956, OF THE ABOVE ADDRESS

DATE OF REGISTRATION	21/02/2014
TITLE	BOTTLE

PRIORITY NA

DESIGN NUMBER	259164
CLASS	14-03

1)AUDI AG,
A JOINT STOCK COMPANY ESTABLISHED UNDER GERMAN LAW, OF 85045 INGOLSTADT, GERMANY

DATE OF REGISTRATION	31/12/2013
TITLE	CASING FOR REMOTE CONTROLS

PRIORITY

PRIORITY NUMBER	DATE	COUNTRY
002272211	10/07/2013	OHIM

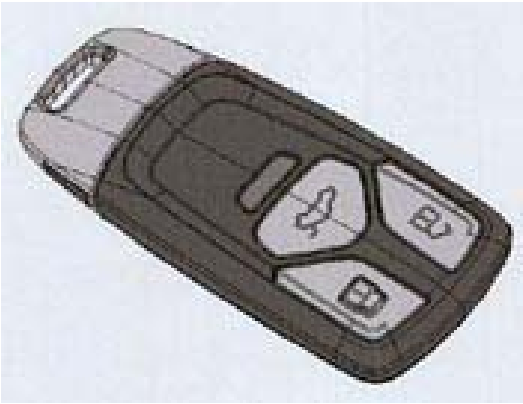

DESIGN NUMBER	256017
CLASS	14-03

1)SAMSUNG ELECTRONICS CO., LTD., A KOREAN COMPANY,
OF 129, SAMSUNG-RO, YEONGTONG-GU, SUWON-SI, GYEONGGI-DO, 443-742 REPUBLIC OF KOREA

DATE OF REGISTRATION	23/08/2013
TITLE	PORTABLE ELECTRONIC DEVICE

PRIORITY

PRIORITY NUMBER	DATE	COUNTRY
30-2013-0009582	23/02/2013	KOREA(SOUTH)

DESIGN NUMBER	258511
CLASS	15-06
1)DÜRKOPP ADLER AG, A COMPANY INCORPORATED UNDER THE LAWS OF GERMANY, OF POTSDAMER STRASSE 190, 33719 BIELEFELD, GERMANY	
DATE OF REGISTRATION	02/12/2013
TITLE	ROTATING HOOK FOR A SEWING MACHINE

PRIORITY

PRIORITY NUMBER	DATE	COUNTRY
742 215 801	05/06/2013	WIPO

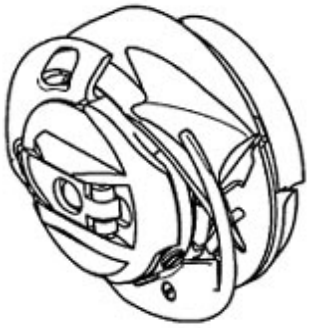

DESIGN NUMBER	258612
CLASS	06-04
1)HERMAN MILLER, INC., A CORPORATION ORGANIZED AND EXISTING UNDER THE LAWS OF THE STATE OF MICHIGAN, UNITED STATES OF AMERICA, OF MS 0440, 855 EAST MAIN AVENUE, P.O. BOX 302, ZEELAND, MICHIGAN 49464-0302, UNITED STATES OF AMERICA	
DATE OF REGISTRATION	06/12/2013
TITLE	STORAGE COMPONENT

PRIORITY

PRIORITY NUMBER	DATE	COUNTRY
29/457,260	07/06/2013	U.S.A.

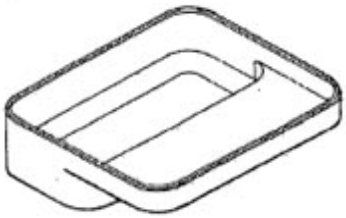

DESIGN NUMBER	258819
CLASS	09-09
1)COMPAGNIE PLASTIC OMNIUM, A FRENCH COMPANY OF 19 AVENUE JULES CARTERET-69007 LYON, FRANCE	
DATE OF REGISTRATION	18/12/2013
TITLE	CONTAINER FOR COLLECTION OF WASTE

PRIORITY

PRIORITY NUMBER	DATE	COUNTRY
DM/081848	11/09/2013	WIPO

DESIGN NUMBER	258911
CLASS	19-06
1)TSUKASA FELT SHOJI CO., LTD., OF 11-8 SHIMBASHI, 3-CHOME, MINATO-KU, TOKYO, JAPAN	
DATE OF REGISTRATION	23/12/2013
TITLE	PEN NIB

PRIORITY

PRIORITY NUMBER	DATE	COUNTRY
2013-014214	24/06/2013	JAPAN

DESIGN NUMBER	259738
CLASS	12-11
1)HERO MOTOCORP LIMITED, A COMPANY INCORPORATED UNDER THE INDIAN COMPANIES ACT, HAVING ITS OFFICE AT 34, COMMUNITY CENTRE, BASANT LOK, VASANT VIHAR, NEW DELHI-110058	
DATE OF REGISTRATION	28/01/2014
TITLE	VEHICLE FOR DIFFERENTLY ABLED PERSON
PRIORITY NA	

DESIGN NUMBER	255665
CLASS	09-03
1)RELIANCE RETAIL LIMITED, AN INDIAN COMPANY HAVING ITS REGISTERED OFFICE ADDRESS AT 3RD FLOOR, COURT HOUSE, LOKMANYA TILAK MARG, DHOBI TALAO, MUMBAI 400 002, MAHARASHTRA, INDIA	
DATE OF REGISTRATION	06/08/2013
TITLE	TALC CONTAINER
PRIORITY NA	

DESIGN NUMBER	252276
CLASS	14-02
1)ROCKWELL AUTOMATION ASIA PACIFIC BUSINESS CTR. PTE., LTD., 2 CORPORATION ROAD, CORPORATION PLACE, SINGAPORE 618494 SG	
DATE OF REGISTRATION	13/03/2013
TITLE	INDUSTRIAL AUTOMATION DRIVE CONTROLLER

PRIORITY

PRIORITY NUMBER	DATE	COUNTRY
29/432,413	14/09/2012	U.S.A.

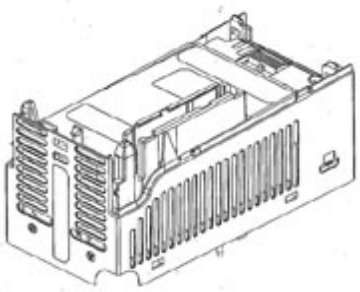

DESIGN NUMBER	251353
CLASS	24-01
1)COVIDIEN LP, 15 HAMPSHIRE STREET, MANSFIELD MA 02048, UNITED STATES OF AMERICA, NATIONALITY: UNITED STATES OF AMERICA	
DATE OF REGISTRATION	31/01/2013
TITLE	TRACHEOSTOMY TUBE

PRIORITY

PRIORITY NUMBER	DATE	COUNTRY
29/428,481	31/07/2012	U.S.A.

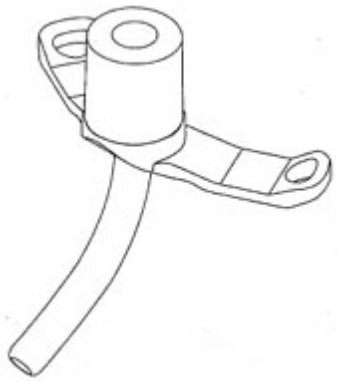

DESIGN NUMBER	256045
CLASS	09-01
1)ORBEL HEALTH LIMITED OF 1 ST. ANDREW'S HILL, LONDON EC4V 5BY, GREAT BRITAIN	
DATE OF REGISTRATION	26/08/2013
TITLE	DISPENSER

PRIORITY

PRIORITY NUMBER	DATE	COUNTRY
002203687-0002	15/03/2013	OHIM

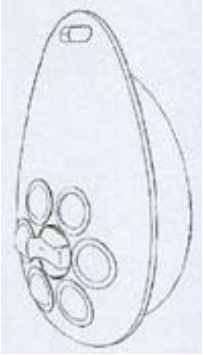

DESIGN NUMBER	258573
CLASS	09-03

1)TETRA LAVAL HOLDINGS & FINANCE S.A.,
OF AVENUE GÉNÉRAL-GUISAN 70, CH-1009 PULLY, 1009 SWITZERLAND

DATE OF REGISTRATION	05/12/2013
TITLE	PACKAGING

PRIORITY

PRIORITY NUMBER	DATE	COUNTRY
002282137-0015	26/07/2013	OHIM

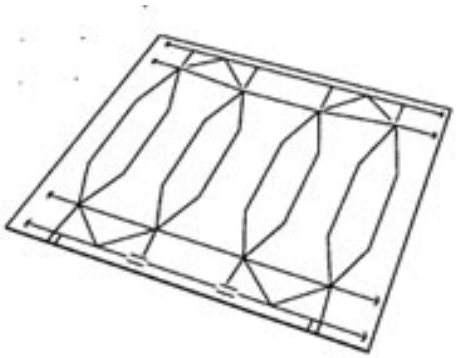

DESIGN NUMBER	258833
CLASS	28-03

1)THE GILLETTE COMPANY, A COMPANY INCORPORATED UNDER THE LAWS OF UNITED STATES OF AMERICA HAVING ITS OFFICE AT
IP/LEGAL PATENT DEPARTMENT - 3E, ONE GILLETTE PARK, BOSTON, MASSACHUSETTS 02127, UNITED STATES OF AMERICA

DATE OF REGISTRATION	18/12/2013
TITLE	LUBRICATING STRIP FOR A RAZOR CARTRIDGE

PRIORITY

PRIORITY NUMBER	DATE	COUNTRY
29/459034	25/06/2013	U.S.A.

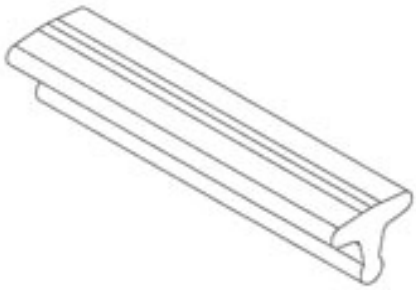

DESIGN NUMBER	259114
CLASS	15-99

1)1. KYB-YS CO., LTD. 9165, SAKAKI, SAKAKI-MACHI, HANISHINA-GUN, NAGANO 3890688, JAPAN, NATIONALITY: JAPANESE,
2. KAYABA INDUSTRY CO., LTD. WORLD TRADE CENTER BLDG., 4-1, HAMAMATSU-CHO 2-CHOME, MINATO-KU, TOKYO 1056111, JAPAN, NATIONALITY: JAPANESE

DATE OF REGISTRATION	30/12/2013
TITLE	FLUID PRESSURE ACTUATOR

PRIORITY

PRIORITY NUMBER	DATE	COUNTRY
2013-15451	05/07/2013	JAPAN

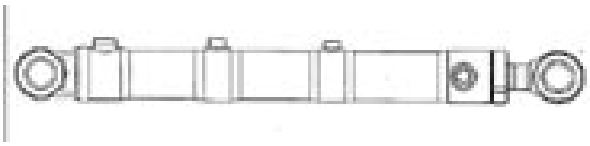

DESIGN NUMBER	259767	
CLASS	24-04	
1)LUPIN LIMITED., AN INDIAN COMPANY REGISTERED UNDER THE COMPANIES ACT, 1956, AND HAVING ITS OFFICE AT 159 CST ROAD, KALINA, SANTACRUZ (EAST), MUMBAI, 400098, STATE OF MAHARASHTRA, INDIA		
DATE OF REGISTRATION	28/01/2014	
TITLE	INHALER	
PRIORITY NA		

DESIGN NUMBER	257117	
CLASS	09-03	
1)PIDILITE INDUSTRIES LIMITED, A COMPANY INCORPORATED UNDER THE COMPANIES ACT, 1956 HAVING ITS OFFICE AT REGENT CHAMBERS, 7TH FLOOR, JAMNALAL BAJAJ MARG, 208, NARIMAN POINT, MUMBAI 400021, MAHARASHTRA, INDIA, INDIAN NATIONAL		
DATE OF REGISTRATION	30/09/2013	
TITLE	CONTAINER	
PRIORITY NA		

DESIGN NUMBER	259983	
CLASS	12-16	
1)TATA MOTORS LIMITED, AN INDIAN COMPANY OF BOMBAY HOUSE, 24 HOMI MODY STREET, HUTATMA CHOWK, MUMBAI 400001, MAHARASHTRA, INDIA		
DATE OF REGISTRATION	31/01/2014	
TITLE	DOOR TRIM OF A VEHICLE	
PRIORITY NA		

DESIGN NUMBER	256046
CLASS	09-01
1)ORBEL HEALTH LIMITED OF 1 ST. ANDREW'S HILL, LONDON EC4V 5BY, GREAT BRITAIN	
DATE OF REGISTRATION	26/08/2013
TITLE	DISPENSER

PRIORITY

PRIORITY NUMBER	DATE	COUNTRY
002203687-0001	15/03/2013	EUROPEAN UNION

DESIGN NUMBER	261023
CLASS	08-06
1)SH. RAJNEESH GODANI, PROPRIETOR M/S GODANI METAL CO., B-14, INDUSTRIAL ESTATE, ALIGARH-202001 (UTTAR PRADESH) (INDIAN NATIONAL)	
DATE OF REGISTRATION	18/03/2014
TITLE	HANDLE
PRIORITY NA	

DESIGN NUMBER	259121
CLASS	13-03
1)ABB TECHNOLOGY LTD., A SWISS COMPANY OF AFFOLTERNSTRASSE 44, ZURICH, CH-8050, SWITZERLAND	
DATE OF REGISTRATION	30/12/2013
TITLE	ELECTRICAL FREQUENCY CONVERTER CABINET

PRIORITY

PRIORITY NUMBER	DATE	COUNTRY
201330352246.1	25/07/2013	CHINA

DESIGN NUMBER	248991
CLASS	03-01
1)M/S. NEW LEAF SYSTEMS, LLC; A LIMITED LIABILITY COMPANY INCORPORATED AND EXISTING IN UNITED STATES OF AMERICA OF THE ADDRESS: 468 N. CAMDEN DRIVE, BEVERLY HILLS, CA 90210, UNITED STATES OF AMERICA	
DATE OF REGISTRATION	25/10/2012
TITLE	CIGARETTE CARRYING CASE
PRIORITY	

PRIORITY NUMBER	DATE	COUNTRY
29/419,168	25/04/2012	U.S.A.

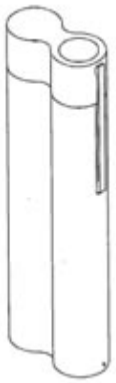

DESIGN NUMBER	259846
CLASS	23-03
1)M/S. V-GUARD INDUSTRIES LTD., AN INDIAN COMPANY INCORPORATED UNDER THE COMPANIES ACT OF 1956 WHOSE ADDRESS IS 33/2905 F, VENNALA HIGH SCHOOL ROAD, VENNALA, KOCHI - 682028, KERALA STATE, INDIA	
DATE OF REGISTRATION	30/01/2014
TITLE	WATER HEATER
PRIORITY NA	

DESIGN NUMBER	259984
CLASS	12-16
1)TATA MOTORS LIMITED, AN INDIAN COMPANY OF BOMBAY HOUSE, 24 HOMI MODY STREET, HUTATMA CHOWK, MUMBAI 400001, MAHARASHTRA, INDIA	
DATE OF REGISTRATION	31/01/2014
TITLE	DOOR TRIM OF A VEHICLE
PRIORITY NA	

DESIGN NUMBER	256640
CLASS	10-04
1)FREEMANS MEASURES PVT. LTD, AN INDIAN COMPANY, G. T. ROAD, JUGIANA, LUDHIANA - 141117, PUNJAB, INDIA, AN INDIAN COMPANY	
DATE OF REGISTRATION	20/09/2013
TITLE	MEASURING TAPE
PRIORITY NA	

DESIGN NUMBER	258575
CLASS	24-04
1)ALFRED VON SCHUCKMANN, OF WINNEKENDONKER STRASSE 52, KEVELAER, 47627 GERMANY	
DATE OF REGISTRATION	05/12/2013
TITLE	INHALER

PRIORITY

PRIORITY NUMBER	DATE	COUNTRY
001373658	06/06/2013	OHIM

DESIGN NUMBER	259141
CLASS	15-09
1)GRIND MASTER MACHINES PVT. LTD., AN INDIAN COMPANY HAVING ADDRESS AS B-10/B-11/B-14, RAILWAY STATION MIDC, AURANGABAD-431005 MAHARASHTRA, INDIA	
DATE OF REGISTRATION	30/12/2013
TITLE	ROBOTIC DEBURRING MACHINE
PRIORITY NA	

DESIGN NUMBER	259769	
CLASS	24-04	
1)LUPIN LIMITED., AN INDIAN COMPANY REGISTERED UNDER THE COMPANIES ACT, 1956, AND HAVING ITS OFFICE AT 159 CST ROAD, KALINA, SANTACRUZ (EAST), MUMBAI, 400098, STATE OF MAHARASHTRA, INDIA		
DATE OF REGISTRATION	28/01/2014	
TITLE	INHALER	
PRIORITY NA		
DESIGN NUMBER	257892	
CLASS	10-05	
1)DAYAL CHAND TRADING AS M/S. SIGMA REFRIGERATION WORKS, 3745, SHOP NO. 1 & 7, KUCHA PARMANAND, NETAJI SUBHASH MARG, DARYA GANJ, NEW DELHI-1100 02, INDIA (A SOLE PROPRIETORSHIP FIRM)		
DATE OF REGISTRATION	31/10/2013	
TITLE	REFRIGERANT SIGHT GLASS	
PRIORITY NA		
DESIGN NUMBER	251352	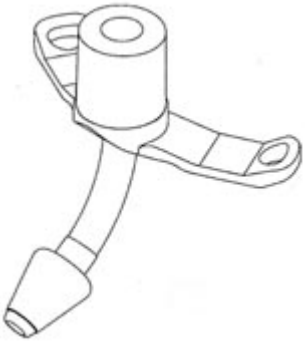
CLASS	24-01	
1)COVIDIEN LP, 15 HAMPSHIRE STREET, MANSFIELD MA 02048, UNITED STATES OF AMERICA, NATIONALITY: UNITED STATES OF AMERICA		
DATE OF REGISTRATION	31/01/2013	
TITLE	TRACHEOSTOMY TUBE	

PRIORITY

PRIORITY NUMBER	DATE	COUNTRY
29/428,460	31/07/2012	U.S.A.

DESIGN NUMBER	258618
CLASS	08-06
1)(1) RUPESHBHAI MANSUKHBHAI MANSARA (2) JAYESHBHAI GOBARBHAI SHEKHALIYA (3) CHETANBHAI LAVJIBHAI SINGHALA (ALL THE PARTNERS ARE ADULT & INDIAN NATIONAL) PARTNERS OF JAY SOMNATH METAL (INDIAN PARTNERSHIP FIRM) HAVING PLACE OF BUSINESS AT: 3, MARUTI INDUSTRIAL AREA, KOTHARIYA RING ROAD, B/H. MURLIDHAR WAYBRIDGE, N.H. 8B, RAJKOT-360003-GUJARAT-(INDIA)	
DATE OF REGISTRATION	09/12/2013
TITLE	HANDLE
PRIORITY NA	

DESIGN NUMBER	259113
CLASS	15-99
1)1. KYB-YS CO., LTD. 9165, SAKAKI, SAKAKI-MACHI, HANISHINA-GUN, NAGANO 3890688, JAPAN, NATIONALITY: JAPANESE, 2. KAYABA INDUSTRY CO., LTD. WORLD TRADE CENTER BLDG., 4-1, HAMAMATSU-CHO 2-CHOME, MINATO-KU, TOKYO 1056111, JAPAN, NATIONALITY: JAPANESE	
DATE OF REGISTRATION	30/12/2013
TITLE	FLUID PRESSURE ACTUATOR
PRIORITY	

PRIORITY NUMBER	DATE	COUNTRY
2013-15450	05/07/2013	JAPAN

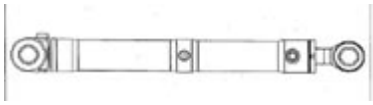

DESIGN NUMBER	255815
CLASS	11-01
1)CORE JEWELLERY PRIVATE LIMITED., (AN INDIAN PRIVATE LIMITED COMPANY REGISTERED UNDER THE INDIAN COMPANIES ACT, 1956), AT GJ-4, SDF-VII, SEEPZ, M.I.D.C., ANDHERI (EAST), MUMBAI-400096, MAHARASHTRA, INDIA	
DATE OF REGISTRATION	14/08/2013
TITLE	JEWELLERY
PRIORITY NA	

DESIGN NUMBER	260001
CLASS	12-16
1)HONDA MOTOR CO., LTD., A JAPANESE CORPORATION, OF 1-1, MINAMI-AOYAMA 2-CHOME, MINATO-KU, TOKYO, 107-8556 JAPAN	
DATE OF REGISTRATION	03/02/2014
TITLE	REAR COVER FOR MOTOR SCOOTER
PRIORITY	

PRIORITY NUMBER	DATE	COUNTRY
2013-018249	08/08/2013	JAPAN

DESIGN NUMBER	256663
CLASS	24-02
1)PFIZER LIMITED, A COMPANY INCORPORATED UNDER THE LAWS OF UNITED KINGDOM OF THE ADDRESS RAMSGATE ROAD, SANDWICH, KENT CT13 9NJ, UNITED KINGDOM	
DATE OF REGISTRATION	20/09/2013
TITLE	INJECTOR USED FOR MEDICINAL/COSMETIC PURPOSES
PRIORITY	

PRIORITY NUMBER	DATE	COUNTRY
002211219-0006	28/03/2013	OHIM

DESIGN NUMBER	262024
CLASS	05-05
1)M/S. BIBA APPARELS PRIVATE LIMITED, AN INDIAN PRIVATE LIMITED COMPANY INCORPORATED UNDER THE PROVISION OF THE COMPANIES ACT, 1956, AND HAVING ITS'S REGISTERED OFFICE AT RELIABLE HOUSE, SITUATED AT HANUMAN SILK MILL COMPOUND, KANJURMARG (WEST), OPP. HUMA MALL, MUMBAI-400 078 MAHARASHTRA, INDIA.	
DATE OF REGISTRATION	25/04/2014
TITLE	TEXTILE FABRIC
PRIORITY NA	

DESIGN NUMBER	262092
CLASS	06-11
1)JAIPUR RUGS COMPANY PVT. LTD., AN INDIAN COMPANY OF G-250, MANSAROVAR INDUSTRIAL AREA, JAIPUR-302020, RAJASTHAN, INDIA	
DATE OF REGISTRATION	28/04/2014
TITLE	CARPET
PRIORITY NA	

DESIGN NUMBER	258661
CLASS	06-01
1)NAYASA WORLD OF SURVEY NO. 655/IC NEAR SOMNANATH CO.OP.SOCIETY, DABHEL NANI DAMAN, DAMAN-396310, (UNION TERRITORIES) DAMAN, INDIA, INDIAN PARTNERSHIP FIRM, WHOSE PARTNERS ARE RUPA SACHDEV, MANASI SACHDEV & KISHOR MALIK, ALL INDIAN NATIONALS	
DATE OF REGISTRATION	11/12/2013
TITLE	STOOL
PRIORITY NA	

DESIGN NUMBER	258726
CLASS	09-07
1)MEADWESTVACO CALMAR NETHERLANDS B.V., OF ALBERT EINSTEINWEG 10, 5151 DL DRUNEN, THE NETHERLANDS	
DATE OF REGISTRATION	13/12/2013
TITLE	PUMP BODY FOR LIQUID DISPENSING PUMP
PRIORITY NA	

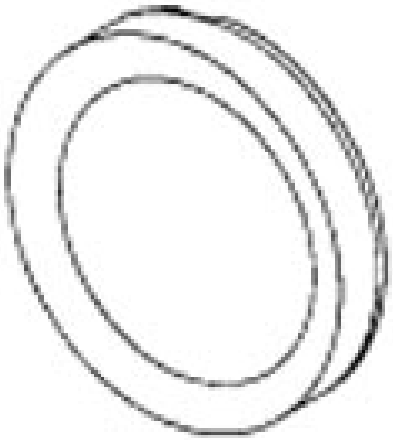

DESIGN NUMBER	228962
CLASS	29-02
1)SCOTT HEALTH & SAFETY LTD., A BRITISH CO. OF, PIMBO ROAD, WEST PIMBO, SKELMERSDALE, LANCASHIRE, WN8 9RA, GREAT BRITAIN	
DATE OF REGISTRATION	29/04/2010
TITLE	BLOWER UNIT FOR BREATHING MASK

PRIORITY

PRIORITY NUMBER	DATE	COUNTRY
001176051-0002	02/11/2009	OHIM

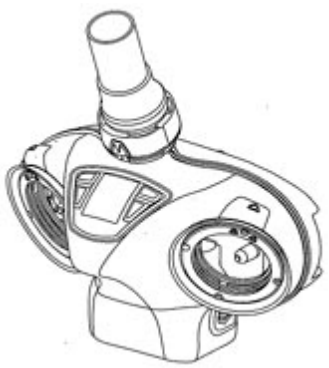

DESIGN NUMBER	260745
CLASS	13-03
1)M/S GM MODULAR PVT. LTD., (A COMPANY INCORPORATED UNDER INDIAN COMPANIES ACT), 14/15, BOKADIA IND. ESTATE, SATIVALI ROAD, VASAI (EAST)-401208, DISTRICT-THANE, MAHARASHTRA (INDIA)	
DATE OF REGISTRATION	03/03/2014
TITLE	SWITCH

PRIORITY NA

DESIGN NUMBER	257968
CLASS	12-05
1)KONECRANES PLC, A COMPANY ORGANIZED AND EXISTING UNDER THE LAWS OF FINLAND, OF THE ADDRESS KONEENKATU 8, 05830 HYVINKÄÄ, FINLAND	
DATE OF REGISTRATION	05/11/2013
TITLE	CONTROL DEVICE FOR CRANES

PRIORITY

PRIORITY NUMBER	DATE	COUNTRY
002233213-0003	07/05/2013	OHIM

DESIGN NUMBER	256416
CLASS	06-01
1)HERMAN MILLER, INC., OF 855 EAST MAIN AVENUE, ZEELAND, MICHIGAN 49464, UNITED STATES OF AMERICA	
DATE OF REGISTRATION	13/09/2013
TITLE	FURNITURE

PRIORITY

PRIORITY NUMBER	DATE	COUNTRY
29/450,168	15/03/2013	U.S.A.

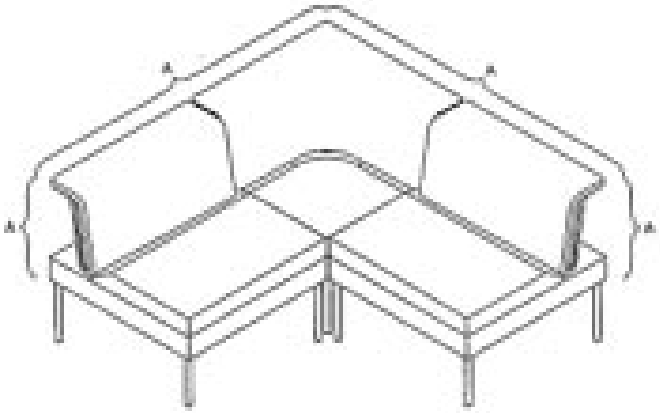

DESIGN NUMBER	256641
CLASS	24-03
1)SAHAJANAND MEDICAL TECHNOLOGIES (P) LTD, AN INDIAN COMPANY, REGD. OFFICE AT SAHAJANAND ESTATE, WAKHARIAWADI, NEAR DABHOLI, VED ROAD, SURAT-395004, GUJARAT, INDIA	
DATE OF REGISTRATION	20/09/2013
TITLE	CORONARY STENT
PRIORITY NA