# पेटेंट कार्यालय
# शासकीय जर्नल

# OFFICIAL JOURNAL
# OF
# THE PATENT OFFICE


| | | |
|---|---|---|
| निर्गमन सं. 29/2015 | शुक्रवार | दिनांक: 17/07/2015 |
| ISSUE NO. 29/2015 | FRIDAY | DATE: 17/07/2015 |

**पेटेंट कार्यालय का एक प्रकाशन**

PUBLICATION OF THE PATENT OFFICE

# INTRODUCTION

In view of the recent amendment made in the Patents Act, 1970 by the Patents (Amendment) Act, 2005 effective from 01st January 2005, the Official Journal of The Patent Office is required to be published under the Statute. This Journal is being published on weekly basis on every Friday covering the various proceedings on Patents as required according to the provision of Section 145 of the Patents Act 1970. All the enquiries on this Official Journal and other information as required by the public should be addressed to the Controller General of Patents, Designs & Trade Marks. Suggestions and comments are requested from all quarters so that the content can be enriched.

**( Rajiv Aggarwal )**
**CONTROLLER GENERAL OF PATENTS, DESIGNS & TRADE MARKS**

17TH JULY, 2015

# CONTENTS

**THE PATENT OFFICE**
**KOLKATA, 17/07/2015**
**Address of the Patent Offices/Jurisdictions**
**The following are addresses of all the Patent Offices located at different places having their Territorial Jurisdiction on a Zonal basis as shown below:-**

| | | | |
|---|---|---|---|
| 1 | Office of the Controller General of Patents,<br>Designs & Trade Marks,<br>Boudhik Sampada Bhavan,<br>Near Antop Hill Post Office,S.M.Road,Antop Hill,<br>Mumbai – 400 037<br><br>Phone: (91)(22) 24123311,<br>Fax : (91)(22) 24123322<br>E-mail: cgpdtm@nic.in | 4 | The Patent Office,<br>Government of India,<br>Intellectual Property Rights Building,<br>G.S.T. Road, Guindy,<br>Chennai – 600 032.<br><br>Phone: (91)(44) 2250 2081-84<br>Fax : (91)(44) 2250 2066<br>E-mail: chennai-patent@nic.in<br>❖ The States of Andhra Pradesh, Telangana, Karnataka, Kerala, Tamil Nadu and the Union Territories of Puducherry and Lakshadweep. |
| 2 | The Patent Office,<br>Government of India,<br>Boudhik Sampada Bhavan,<br>Near Antop Hill Post Office,S.M.Road,Antop Hill,<br>Mumbai – 400 037<br>Phone: (91)(22) 24137701<br>Fax: (91)(22) 24130387<br>E-mail: mumbai-patent@nic.in<br>❖ The States of Gujarat, Maharashtra, Madhya Pradesh, Goa and Chhattisgarh and the Union Territories of Daman and Diu & Dadra and Nagar Haveli | 5 | The Patent Office (Head Office),<br>Government of India,<br>Boudhik Sampada Bhavan,<br>CP-2, Sector –V, Salt Lake City,<br>Kolkata- 700 091<br><br>Phone: (91)(33) 2367 1943/44/45/46/87<br>Fax: (91)(33) 2367 1988<br>E-Mail: kolkata-patent@nic.in<br><br>❖ Rest of India |
| 3 | The Patent Office,<br>Government of India,<br>Boudhik Sampada Bhavan,<br>Plot No. 32., Sector-14, Dwarka,<br>New Delhi – 110075<br>Phone: (91)(11) 2808 1921 – 25<br>Fax: (91)(11) 2808 1920 & 2808 1940<br>E.mail: delhi-patent@nic.in<br>❖ The States of Haryana, Himachal Pradesh, Jammu and Kashmir, Punjab, Rajasthan, Uttar Pradesh, Uttaranchal, Delhi and the Union Territory of Chandigarh. | | |

**Website: www.ipindia.nic.in**
**www.patentoffice.nic.in**

**All applications, notices, statements or other documents or any fees required by the Patents Act, 1970 and The Patents (Amendment) Act, 2005 or by the Patents (Amendment) Rules, 2006 will be received only at the appropriate offices of the Patent Office.**

**Fees: The Fees may either be paid in cash or may be sent by Bank Draft or Cheques payable to the Controller of Patents drawn on a scheduled Bank at the place where the appropriate office is situated.**

## पेटेंट कार्यालय

## कोलकाता, दिनांक 17/07/2015

### • कार्यालयों के क्षेत्राधिकार के पते

**विभिन्न जगहों पर स्थित पेटेंट कार्यालय के पते आंचलिक आधार पर दर्शित उनके प्रादेशिक अधिकार क्षेत्र के साथ नीचे दिए गए है:-**

| | | | |
|---|---|---|---|
| 1 | कार्यालय : महानियंत्रक, एकस्व, अभिकल्प<br>तथा व्यापार चिहन,<br>एंटोप हिल डाकघर के समीप,<br>एस. एम. रोड, एंटोप हिल, मुम्बई- 400 037, भारत,<br>फोन: (91) (22) 24123311<br>फ़ैक्स: (91) (22) 24123322<br>ई. मेल: cgpdtm@nic.in | 4 | पेटेंट कार्यालय, भारत सरकार<br>इंटेलेक्चुअल प्रॉपर्टी राइट्स बिल्डिंग, इंडस्ट्रियल इस्टेट<br>एसआईडीसीओ आरएमडी गोडाउन एरिया<br>एडजसेन्ट टु ईगल फ्लास्क, जी. एस. टी. रोड, गायन्डी<br>चेन्नई - 600 032.<br>फोन: (91)(44) 2250 2081-84<br>फ़ैक्स: (91)(44) 2250-2066<br>ई. मेल: chennai-patent@nic.in<br>❖ आन्ध्र प्रदेश, तेलंगाना, कर्नाटक, केरल, तमिलनाडु तथा पुडुचेरी राज्य क्षेत्र एवं संघ शासित क्षेत्र, लक्षदीप |
| 2 | पेटेंट कार्यालय, भारत सरकार<br>बौद्धिक संपदा भवन,<br>एंटोप हिल डाकघर के समीप,<br>एस. एम. रोड, एंटोप हिल, मुम्बई- 400 037,<br>फोन: (91) (22) 24137701<br>फ़ैक्स: (91) (22) 24130387<br>ई. मेल: Mumbai-patent@nic.in<br>❖ गुजरात, महाराष्ट्र, मध्य प्रदेश, गोवा तथा छत्तीसगढ़ राज्य क्षेत्र एवं संघ शासित क्षेत्र, दमन तथा दीव, दादर और नगर हवेली• | 5 | पेटेंट कार्यालय, भारत सरकार<br>कोलकाता, (प्रधान कार्यालय)<br>बौद्धिक संपदा भवन,<br>सीपी-2, सेक्टर- V, साल्ट लेक सिटी,<br>कोलकाता-700 091, भारत.<br>फोन: (91)(33) 2367 1943/44/45/46/87<br>फ़ैक्स:/Fax: (91)(33) 2367 1988<br>ई. मेल: kolkata-patent@nic.in<br>❖ भारत का अवशेष क्षेत्र |
| 3 | पेटेंट कार्यालय, भारत सरकार<br>बौद्धिक संपदा भवन,<br>प्लॉट सं. 32, सेक्टर- 14, द्वारका, नई दिल्ली- 110 075.<br>फोन: (91)(11) 2808 1921-25<br>फ़ैक्स: (91)(11) 2808 1920, 2808 1940<br>ई. मेल: delhi-patent@nic.in<br>हरियाणा, हिमाचल प्रदेश, जम्मू तथा कश्मीर, पंजाब,राजस्थान, उत्तर प्रदेश, दिल्ली तथा उत्तरांचल राज्य क्षेत्रों, एवं संघ शासित क्षेत्र चंडीगढ़ | | |

वेबसाइट: http://www.ipindia.nic.in

www.patentoffice.nic.in

पेटेंट अधिनियम, 1970 तथा पेटेंट (संशोधन) अधिनियम, 2005 अथवा पेटेंट (संशोधन) नियम, 2006 द्वारा वांछित सभी आवेदन, सूचनाए, विवरण या अन्य दस्तावेज़ या कोई शुल्क पेटेंट कार्यालय के केवल उपयुक्त कार्यालय में स्वीकृत होंगे।

शुल्क: शुल्क या तो नगद रूप में या Controller of Patents के नाम में देय बैंक ड्राफ्ट या चेक के द्वारा भेजी जा सकती है जो उसी स्थान के किसी अनुसूचित बैंक में प्रदत्त हो जहाँ उपयुक्त कार्यालय स्थित है ।

# SPECIAL NOTICE

## 18 Months publication as required under Section 11A of the Patents Act, 1970 as amended by the Patents (Amendment) Act, 2005.

Notice is hereby given that any person at any time before the grant of Patent may give representation by way of opposition to the Controller of Patents at appropriate office on the ground and in a manner specified under section 25(1) of the Patents (Amendment) Act, 2005 read with Rule 55 of the Patents (Amendment) Rules, 2006.

Notice is also given that if any interested person requests for copies of the complete specification, drawing and abstract of any application already published, the photocopy of the same can be supplied by the Patent Office as per the jurisdiction on payment of prescribed fees of Rs.8/- per page. If any further details are required to be obtained, the same can be provided by the respective Patent Offices on request.

**( Rajiv Aggarwal )**
**CONTROLLER GENERAL OF PATENTS, DESIGNS & TRADE MARKS**

# SPECIAL NOTICE

Under the new provision of the Patents Act, 1970 as amended by the Patents (Amendment) Act, 2005 and Rules there under, Publication of the matter relating to Patents in the Official Gazette of India Part III, Section 2 has been discontinued and instead The Official Journal of the Patent Office is being published containing all the activities of The Patent Office such as publication of all the patent applications after 18th months , grant of patents & all other information in respect of the proceedings as required under the provisions of the Patents (Amendment) Act, 2005 and Rules thereunder on weekly basis on every **Friday**.

The Journal is uploaded in the website every Friday. So Paper form and CD-ROM form of the Journal are discontinued from 01/01/2009.

# SPECIAL NOTICE

Every effort is being taken to publish all the patent applications under section 11(A) of the Patents Act. However, if duplication of publication of any application is found, then earlier date of publication will be taken for the purpose of provisional protection for applicant and Patent Office will grant Patent not before six months from the date of second publication, provided that there is there is no third party representation.

# Early Publication:

**The following patent applications have been published under section 11A (2) of The Patents (Amendment) Act 2005 and rule 24A of The Patents (Amendment) Rules, 2006. Any person may file representation by way of opposition to the Controller of Patents at the appropriate office against the grant of the patent in the prescribed manner under section 25(1) of the Patents (Amendment) Act 2005 read with the rule 55 of The Patents (Amendment) Rules, 2006:**


(12) PATENT APPLICATION PUBLICATION

(21) Application No.4733/DELNP/2015 A

(19) INDIA

(22) Date of filing of Application :01/06/2015

(43) Publication Date : 17/07/2015


(54) Title of the invention : REDUCING AGENT TANK AND UTILITY VEHICLE


| | |
|---|---|
| (51) International classification | :F01N3/08,B01D53/94,B01D53/56 |
| (31) Priority Document No | :NA |
| (32) Priority Date | :NA |
| (33) Name of priority country | :NA |
| (86) International Application No | :PCT/JP2014/050119 |
| Filing Date | :08/01/2014 |
| (87) International Publication No | :WO 2014/199649 |
| (61) Patent of Addition to Application Number | :NA |
| Filing Date | :NA |
| (62) Divisional to Application Number | :NA |
| Filing Date | :NA |



(71)**Name of Applicant :**

**1)KOMATSU LTD.**

Address of Applicant :2 3 6 Akasaka Minato ku Tokyo 1078414 Japan

(72)**Name of Inventor :**

**1)OGAWA Satoshi**

**2)KUSABA Taisuke**

**3)KUSE Yasutaka**



(57) Abstract :

Provided is a reducing agent tank with which it is possible to improve the heat transfer coefficient for the transfer of heat to the reducing agent and with which it is possible to transfer heat to the reducing agent uniformly in the height direction of the reducing agent tank. The reducing agent tank is equipped with: a container body having a top surface and a bottom surface thereby constituting a space in which a reducing agent is stored between the top surface and the bottom surface; and a heat exchanger (40) that performs heat exchange with the reducing agent. The heat exchanger (40) has through sections (51, 61) an inclined part (52) and an inclined part (62). The through sections (51, 61) pass through the upper surface of the container body extending into the space. The inclined part (52) is inclined with respect to the through sections (51, 61) and extends towards the bottom surface side. The inclined part (62) extends towards the bottom surface side with respect to the through sections (51, 61) at a different position to the inclined part (52) in the direction in which the through sections (51, 61) extend.


No. of Pages : 46 No. of Claims : 6

(12) PATENT APPLICATION PUBLICATION
(21) Application No.4734/DELNP/2015 A
(19) INDIA
(22) Date of filing of Application :01/06/2015
(43) Publication Date : 17/07/2015

(54) Title of the invention : REDUCING AGENT TANK AND WORK VEHICLE

(51) International classification :F01N3/08,B01D53/94,B01D53/56
(31) Priority Document No :NA
(32) Priority Date :NA
(33) Name of priority country :NA
(86) International Application No :PCT/JP2014/050120
Filing Date :08/01/2014
(87) International Publication No :WO 2014/192318
(61) Patent of Addition to Application Number :NA
Filing Date :NA
(62) Divisional to Application Number :NA
Filing Date :NA

(71)**Name of Applicant :**
**1)KOMATSU LTD.**
Address of Applicant :2 3 6 Akasaka Minato ku Tokyo 1078414 Japan
(72)**Name of Inventor :**
**1)OGAWA Satoshi**
**2)KUSABA Taisuke**
**3)KUSE Yasutaka**

(57) Abstract :
Provided is a reducing agent tank that allows a top lid and a heat exchanger to be removed while keeping the path length of the heat exchanger inside the reducing agent tank long. A first pipeline (50) and a second pipeline (60) that constitute a heat exchanger (40) each comprise: an extended part (54, 64) that extends along a bottom surface (36) from the lower end of a hanging part (41) toward a side surface (35a) of a container body (33); and a rising part (55, 65) that extends along the side surface (35a) from the tip end of the extended part (54, 64) toward the upper surface (34) of the container body (33) up to a fold back part (59). The dimension L1 indicating the length of the extended part (54, 64) along the bottom surface (36) is greater than the dimension LD indicating the maximum inner measurement length of an opening (31). The rising part (55, 65) and the fold back part (59) form a tip end bent part (45) of the heat exchanger (40) and the rising length of the tip end bent part (45) is shorter than the dimension SD indicating the minimum inner measurement length that passes through the center of the opening (31).

No. of Pages : 49 No. of Claims : 7

(12) PATENT APPLICATION PUBLICATION
(21) Application No.4735/DELNP/2015 A
(19) INDIA
(22) Date of filing of Application :01/06/2015
(43) Publication Date : 17/07/2015

(54) Title of the invention : REDUCING AGENT TANK AND WORK VEHICLE

(51) International classification :F01N3/08,B01D53/94,B01D53/56
(31) Priority Document No :NA
(32) Priority Date :NA
(33) Name of priority country :NA
(86) International Application No :PCT/JP2014/050121
Filing Date :08/01/2014
(87) International Publication No :WO 2014/192319
(61) Patent of Addition to Application Number :NA
Filing Date :NA
(62) Divisional to Application Number :NA
Filing Date :NA

(71)**Name of Applicant :**
**1)KOMATSU LTD.**
Address of Applicant :2-3-6, Akasaka Minato-ku Tokyo 1078414 Japan
(72)**Name of Inventor :**
**1)OGAWA Satoshi**
**2)KUSABA Taisuke**
**3)KAJIYA Masatoshi**

(57) Abstract :
A container body (33) of a reducing agent tank (20) is for storing a reducing agent (90). A suck out pipe (70) has a suck in opening (70a) located inside the container body (33) and is for guiding the reducing agent (90) from the suck in opening (70a) to the outside of the container body (33). A filter (100) is provided to the suck in opening (70a) of the suck out pipe (70). The filter (100) includes a surrounding part (110) and an opposing part (120). The surrounding part (110) separates an outside space of the filter (100) and an inside space (105) by surrounding the inside space (105) and has a filter part (101a) through which the reducing agent (90) permeates between the inside space (105) and the outside space. The opposing part (120) extends into the inside space (105) of the surrounding part (110) and thereby the opposing part opposes the filter part (101a) within the inside space (105) with a clearance space (106) provided therebetween the clearance space being in communication with the suck in opening (70a) and also the opposing part separates the clearance space (106) and the outside space.

No. of Pages : 42 No. of Claims : 7

(12) PATENT APPLICATION PUBLICATION
(21) Application No.1709/DEL/2015 A
(19) INDIA
(22) Date of filing of Application :08/06/2015
(43) Publication Date : 17/07/2015

(54) Title of the invention : OIL RECOVERY FROM EFFLUENT WATER USING SOLVENT •

| | | |
|---|---|---|
| (51) International classification | :A23D7/00, C10L1/00 | (71)**Name of Applicant :** **1)Rajan Skhariya** Address of Applicant :610, Som Datt Chambers II, Bhikaji Cama Place, New Delhi-110066, India |
| (31) Priority Document No | :NA | |
| (32) Priority Date | :NA | |
| (33) Name of priority country | :NA | (72)**Name of Inventor :** **1)Rajan Skhariya** |
| (86) International Application No | :NA | |
| Filing Date | :NA | |
| (87) International Publication No | : NA | |
| (61) Patent of Addition to Application Number | :NA | |
| Filing Date | :NA | |
| (62) Divisional to Application Number | :NA | |
| Filing Date | :NA | |

(57) Abstract :
The present invention is a novel process of extraction of emulsified or nonemulsified form of oil from effluent water. More specifically, the present invention relates to a novel process for recovery of oil from emulsified form or non-emulsified form of effluent water to reduce the generation of palm oil mill effluent alongside recovering an increased amount of oil in edible oil stream with the use of flammable or non-flammable solvents namely n-hexane, tri-chloro ethylene from the effluent stream or clarifier stage before it get mixed with the other effluent streams. The palm oil mill effluent coming out from process streams is at a temperature above the boiling point of the solvent used in the process. This would minimize the freshwater consumption in floatation step and consequently the effluent treatment cost significantly reduced.

No. of Pages : 14 No. of Claims : 13

(12) PATENT APPLICATION PUBLICATION
(19) INDIA
(22) Date of filing of Application :03/06/2015

(21) Application No.1595/DEL/2015 A
(43) Publication Date : 17/07/2015

(54) Title of the invention : MULTI-COLOR POINTER FOR VEHICLE INFORMATION DISPLAY INSTRUMENT

| | |
|---|---|
| (51) International classification | :G08B7/00, G01D11/28, |
| (31) Priority Document No | :NA |
| (32) Priority Date | :NA |
| (33) Name of priority country | :NA |
| (86) International Application No | :NA |
| Filing Date | :NA |
| (87) International Publication No | : NA |
| (61) Patent of Addition to Application Number | :NA |
| Filing Date | :NA |
| (62) Divisional to Application Number | :NA |
| Filing Date | :NA |

(71)**Name of Applicant :**
**1)JNS INSTRUMENTS LIMITED**
Address of Applicant :PLOT NO.-4, SECTOR-3, IMT MANESAR, GURGAON, Haryana India
(72)**Name of Inventor :**
**1)RAJESH SINGH**
**2)ARUN KUMAR SHARMA**
**3)DEEPAK KUMAWAT**
**4)ALOK KUMAR**

(57) Abstract :
The present subject matter relates to a vehicle information display instrument with a variable color pointer that includes an actuator positioned on a rear side of a printed circuit board having an actuator shaft rotatble with the rotation of the wheels of the vehicle. The subject matter is also provided with the pointer fixedly attached to the actuator shaft on the front side of the printed circuit board wherein the pointer is adapted to be internally illuminated. The vehicle information display instrument is uniquely provided with an RGB light emitting diode positioned on the rear side of the printed circuit board to produce a plurality of colors. Further, the structure is also provided with a U-shaped passage provided within the actuator to transfer the plurality of colors produced from the RGB (RED, GREEN, BLUE) light emitting diode through first end of the U-shaped passage to internally illuminate the pointer through the second end of the U-shaped passage, wherein the color of the pointer changes according to the instantaneous speed of the vehicle.

No. of Pages : 16 No. of Claims : 10

(12) PATENT APPLICATION PUBLICATION
(21) Application No.876/DEL/2015 A
(19) INDIA
(22) Date of filing of Application :30/03/2015
(43) Publication Date : 17/07/2015

(54) Title of the invention : AUTO DOUBLE ACTION HINGE-CUM-DOOR CLOSER-CUM-DOOR STOPPER SET

(51) International classification :E05D11/10
(31) Priority Document No :NA
(32) Priority Date :NA
(33) Name of priority country :NA
(86) International Application No :NA
Filing Date :NA
(87) International Publication No : NA
(61) Patent of Addition to Application Number :NA
Filing Date :NA
(62) Divisional to Application Number :NA
Filing Date :NA

(71)**Name of Applicant :**
**1)PANKAJ KAUSHAL**
Address of Applicant :89-C, GH/10, SUNDER APARTMENTS, PASCHIM VIHAR, OUTER RING ROAD NEW DELHI.-110087 India
(72)**Name of Inventor :**
**1)PANKAJ KAUSHAL**

(57) Abstract :
An invention to do away with items i)door closers ii)double action movement iii)hinge iv)door stopper used separately for four tier functions on a door, All the four requirements of these products have been clubbed in one item as enumerated above. This four-in-one product serves the purpose of i)hydraulic door closer ii)double action movement (RH & LH), iii)butt hinges and. iv) door stopper; can be easily installed on all type of door and frame combinations and can be handled by consumers with great ease. Has longer life than these items.

No. of Pages : 21 No. of Claims : 4

(12) PATENT APPLICATION PUBLICATION
(21) Application No.1756/DEL/2015 A
(19) INDIA
(22) Date of filing of Application :11/06/2015
(43) Publication Date : 17/07/2015

(54) Title of the invention : AN AGILE BASED METHOD TO VALIDATE SECURITY METRIC SUITE

(51) International classification :H04L29/06
(31) Priority Document No :NA
(32) Priority Date :NA
(33) Name of priority country :NA
(86) International Application No :NA
Filing Date :NA
(87) International Publication No : NA
(61) Patent of Addition to Application Number :NA
Filing Date :NA
(62) Divisional to Application Number :NA
Filing Date :NA

(71)**Name of Applicant :**
**1)DR.SHALINI CHANDRA**
Address of Applicant :BBA UNIVERSITY, LUCKNOW Uttar Pradesh India
**2)DR.RAEES AHMAD KHAN**
(72)**Name of Inventor :**
**1)DR.SHALINI CHANRA**
**2)DR.RAEES AHMAD KHAN**

(57) Abstract :
The discipline of metrics validation is increasing as the importance of metrics is increases. Validation of security metrics depends on the performance of metrics according to various set standards and criteria. An agile based approach has been designed to answer whether developed security metric is really performs according to compliance or not. Validation approach checks the robustness of security metric, to deal with security considerations. In addition, this approach will also help to identify weak points of newly developed metric.

No. of Pages : 8 No. of Claims : 3

(12) PATENT APPLICATION PUBLICATION
(21) Application No.1851/DEL/2015 A
(19) INDIA
(22) Date of filing of Application :22/06/2015
(43) Publication Date : 17/07/2015

(54) Title of the invention : SYSTEM AND METHOD FOR CLASSIFICATION OF TEXT MESSAGE

(51) International classification :G06Q10/10
(31) Priority Document No :NA
(32) Priority Date :NA
(33) Name of priority country :NA
(86) International Application No :NA
Filing Date :NA
(87) International Publication No : NA
(61) Patent of Addition to Application Number :NA
Filing Date :NA
(62) Divisional to Application Number :NA
Filing Date :NA

(71)**Name of Applicant :**
**1)HCL Technologies Limited**
Address of Applicant :B-39, Sector 1, Noida 201 301, Uttar Pradesh, India
(72)**Name of Inventor :**
**1)SINGH, Daljeet**
**2)DEY, Sourav**

(57) Abstract :
The present disclosure relates to system(s) and method(s) for classification of text message. In one or more implementation, type of text message is monitored based on the one or activities performed on an input means of the transmitting device. Based on the type of activity performed the text message is embedded with tag which is unique to a type of message. The embedded text message is transmitted to a receiving device. The receiving device further processes the text message to identify the tag embedded within the text message. Once processed the text message is rendered on the receiving device with a different background or notification tone based on the tag to identify category of text message received.

No. of Pages : 17 No. of Claims : 9

(12) PATENT APPLICATION PUBLICATION
(21) Application No.2135/DEL/2014 A
(19) INDIA
(22) Date of filing of Application :29/07/2014
(43) Publication Date : 17/07/2015

(54) Title of the invention : A SYSTEM FOR PROVIDING NEST ID BASED IDENTIFICATION OF A GEOGRAPHICAL LOCATION AND METHOD THEREOF

| | | |
|---|---|---|
| (51) International classification | :H04L29/06, G09B29/10, | (71)**Name of Applicant :** |
| (31) Priority Document No | :NA | **1)SINGH, Jasdeep** |
| (32) Priority Date | :NA | Address of Applicant :279-A, SURYA ENCLAVE, JALANDHAR CITY, PUNJAB, INDIA |
| (33) Name of priority country | :NA | **2)SHARMA, Rakesh Kumar** |
| (86) International Application No | :NA | **3)KUMAR, Ashish** |
| Filing Date | :NA | **4)BEHERA, Kshitish** |
| (87) International Publication No | : NA | (72)**Name of Inventor :** |
| (61) Patent of Addition to Application Number | :NA | **1)SINGH, Jasdeep** |
| Filing Date | :NA | **2)SHARMA, Rakesh Kumar** |
| (62) Divisional to Application Number | :NA | **3)KUMAR, Ashish** |
| Filing Date | :NA | **4)BEHERA, Kshitish** |

(57) Abstract :
The present invention discloses system and method for providing nest ID based identification of Geographical location. The system comprises a user device, a transceiving unit, and a remote server. The user device determines one or more location coordinates of one or more geographical locations. The user device is configured to assign a nest ID to the determined location coordinate. The transceiving unit is configured in the user device for providing wireless communication. The remote server is wirelessly connected to the user device through the transceiving unit for executing at least one instruction. The present invention also discloses a method of providing nest ID based identification of a Geographical Location. The method comprises determining at least one location coordinate of at least one geographical location, assigning a nest ID to the at least one determined location coordinate, and storing the at least one location coordinate with assigned nest ID in at least one of a user device and a remote server.

No. of Pages : 19 No. of Claims : 20

(12) PATENT APPLICATION PUBLICATION
(21) Application No.1525/DEL/2015 A
(19) INDIA
(22) Date of filing of Application :28/05/2015
(43) Publication Date : 17/07/2015

(54) Title of the invention : INTEGRATED STEERING LOCK CUM IGNITION SWITCH WITH FUEL TANK CAP & SEAT LATCH ACTUATOR

(51) International classification :B60R25/04
(31) Priority Document No :NA
(32) Priority Date :NA
(33) Name of priority country :NA
(86) International Application No :NA
Filing Date :NA
(87) International Publication No : NA
(61) Patent of Addition to Application Number :NA
Filing Date :NA
(62) Divisional to Application Number :NA
Filing Date :NA

(71)**Name of Applicant :**
**1)SANDHAR CENTRE FOR INNOVATION & DEVELOPMENT**
Address of Applicant :3, HSIIDC INDUSTRIAL AREA, SECTOR-18, GURGAON, HARYANA-122015 India
(72)**Name of Inventor :**
**1)NAIK D.K**
**2)DESWAL PRADEEP**
**3)SHARMA GOVIND**
**4)MITTAL ADITYA**

(57) Abstract :
An anti-theft device used in two wheeled motor vehicles to selectively activate / immobilize vehicle electrical system, lock the front steering column, also the unlocking of seat lock and fuel tank cap lock by switching between different pre-defined positions or angles with the key being engaged into the lock assembly. The present invention proposes a multi-functional combination lock that integrates the provisions of selectively accessing electrical system of vehicle, immobilizing the front steering fork of vehicle, accessing the seat lock and fuel tank cap lock into one single lock assembly thereby eliminating the need of separate lock assemblies for operating various locking units in the two wheeled motor vehicle.

No. of Pages : 26 No. of Claims : 9

(12) PATENT APPLICATION PUBLICATION
(21) Application No.1692/DEL/2015 A
(19) INDIA
(22) Date of filing of Application :08/06/2015
(43) Publication Date : 17/07/2015

(54) Title of the invention : A PRESSURE COOKER BASED GENERATION OF ELECTRICAL ENERGY

(51) International classification :H02N11/00
(31) Priority Document No :NA
(32) Priority Date :NA
(33) Name of priority country :NA
(86) International Application No :NA
Filing Date :NA
(87) International Publication No : NA
(61) Patent of Addition to Application Number :NA
Filing Date :NA
(62) Divisional to Application Number :NA
Filing Date :NA

(71)**Name of Applicant :**
**1)NIDAL RAFIUDDIN**
Address of Applicant :DEPARTMENT OF ELECTRICAL ENGINEERING, ALIGARH MUSLIM UNIVERSITY, ALIGARH-202002, U.P., INDIA.
(72)**Name of Inventor :**
**1)NIDAL RAFIUDDIN**

(57) Abstract :
The present invention relates to the generation of electrical energy on small scale using a pressure cooker. The pressure cooker is used as a boiler to produce steam. This steam evacuated through vent tube with an orifice when expanded through turbine coupled with one or many dc generators produces electrical energy which is used to supply load or charge batteries.

No. of Pages : 11 No. of Claims : 6

(12) PATENT APPLICATION PUBLICATION
(21) Application No.1009/DEL/2015 A
(19) INDIA
(22) Date of filing of Application :10/04/2015
(43) Publication Date : 17/07/2015

(54) Title of the invention : METRO INTERMITTENT STOPPING SYSTEM

| | |
|---|---|
| (51) International classification | :B61L27/00, B61B1/00 |
| (31) Priority Document No | :NA |
| (32) Priority Date | :NA |
| (33) Name of priority country | :NA |
| (86) International Application No | :NA |
| Filing Date | :NA |
| (87) International Publication No | : NA |
| (61) Patent of Addition to Application Number | :NA |
| Filing Date | :NA |
| (62) Divisional to Application Number | :NA |
| Filing Date | :NA |

(71)**Name of Applicant :**
**1)RAVI KUMAR**
Address of Applicant :VILL-HALDAHERI, P.O-SAMBHALKI, DISTT.- KURUKSHETRA, STATE - HARYANA, PIN COAD 136118. Haryana India
(72)**Name of Inventor :**
**1)RAVI KUMAR**

(57) Abstract :
Metro Intermittent Stopping System is a process by which we get increase in kilometer for hour, speed of the train due to continuous run on long distance, passenger transfer capacity of any single flow rapid transit systems. Finally we increase rapid transit system efficiency & transfer comfort better by this system. In this system we follow a special flow of trains. In which trains or metros stop at their decided stations and leave many stations while left stations cover by other decided or dedicated trains. Leaving of station could be increase or decrease defends on condition of station numbers and people crowd or passenger numbers. But efficiency will normally increase in increase of leaving station. In this system we also cover special or important station where we get every trains stop. Along with this important or none important number of station can be increased or minimize with balancing of both tracks with special one gap leaving from the both tracks from stopping stations and could be done by providing link in both tracks for interchange the station by passengers.

No. of Pages : 27 No. of Claims : 5

(12) PATENT APPLICATION PUBLICATION
(21) Application No.1792/DEL/2015 A
(19) INDIA
(22) Date of filing of Application :16/06/2015
(43) Publication Date : 17/07/2015

(54) Title of the invention : METHOD AND SYSTEM TO PROVIDE MOBILE APPLICATIONS.

(51) International classification :G06F15/16
(31) Priority Document No :NA
(32) Priority Date :NA
(33) Name of priority country :NA
(86) International Application No :NA
Filing Date :NA
(87) International Publication No : NA
(61) Patent of Addition to Application Number :NA
Filing Date :NA
(62) Divisional to Application Number :NA
Filing Date :NA

(71)**Name of Applicant :**
**1)JAIN, NIMISH**
Address of Applicant :4378/4B, ANSARI ROAD, DARYA GANJ, NEW DELHI-110002 India
**2)RANA, SHASHANK**
(72)**Name of Inventor :**
**1)JAIN, NIMISH**
**2)RANA, SHASHANK**

(57) Abstract :
A method to provide applications is disclosed. The method includes receiving, via the processor, a request from a user at a mobile application platform to redeem points for at least one paid application. Further, the method includes executing, via the processor, one of providing.a list comprising a plurality of paid applications available in the mobile application platform; and obtaining name of the at least one paid application from the user. Further, the method includes performing, via the processor, one of selection the at least one paid application from the plurality of paid applications; and searching the at least one paid application on the application store. Moreover, the method. includes purchasing, via the processor, the at least one paid application using an email address. Finally, the method includes sending, via the processor, instructions to the user to install the at least one purchased paid application.

No. of Pages : 23 No. of Claims : 22

(12) PATENT APPLICATION PUBLICATION
(21) Application No.1867/DEL/2015 A
(19) INDIA
(22) Date of filing of Application :23/06/2015
(43) Publication Date : 17/07/2015

(54) Title of the invention : SOLAR THERMAL ENERGY STORAGE DEVICE

| | |
|---|---|
| (51) International classification | :F24J2/00, F24J2/34 |
| (31) Priority Document No | :NA |
| (32) Priority Date | :NA |
| (33) Name of priority country | :NA |
| (86) International Application No | :NA |
| Filing Date | :NA |
| (87) International Publication No | : NA |
| (61) Patent of Addition to Application Number | :NA |
| Filing Date | :NA |
| (62) Divisional to Application Number | :NA |
| Filing Date | :NA |

(71)**Name of Applicant :**
**1)Gattani, Manoj Kumar**
Address of Applicant :Post Office - Himmatsar (334802), District - Bikaner, Rajasthan, India
(72)**Name of Inventor :**
**1)Gattani, Manoj Kumar**

(57) Abstract :
A solar thermal energy storage device is proposed that has a multilayered concave structure wherein the multi-layered structure forms energy storage chambers. The said device includes a narrow mouth opening that travels from outer chamber to inner chamber and allows a solar radiation to fall upon a reflector. The said reflector reflects the solar radiations on the inner chamber and heats the filler material present inside the inner storage chamber. A plurality of fins is provided on the outer surface of the inner chamber to transfer the thermal energy to outer chamber. A plurality of heat extraction outlets present in the outer chamber allow stored thermal energy to be used for various applications.

No. of Pages : 14 No. of Claims : 9

(12) PATENT APPLICATION PUBLICATION
(21) Application No.1641/DEL/2014 A
(19) INDIA
(22) Date of filing of Application :18/06/2014
(43) Publication Date : 17/07/2015

(54) Title of the invention : METHOD FOR MAKING PACKAGE WITH INTEGRATED HANDLE ON SIDE GUSSET AND PACKAGE THEREOF

| | |
|---|---|
| (51) International classification | :B65D30/18, B65D75/56, |
| (31) Priority Document No | :NA |
| (32) Priority Date | :NA |
| (33) Name of priority country | :NA |
| (86) International Application No | :NA |
| Filing Date | :NA |
| (87) International Publication No | : NA |
| (61) Patent of Addition to Application Number | :NA |
| Filing Date | :NA |
| (62) Divisional to Application Number | :NA |
| Filing Date | :NA |

(71)**Name of Applicant :**
**1)CHATURVEDI, ASHOK**
Address of Applicant :305, III FLOOR, BHANOT CORNER, PAMPOSH ENCLAVE, GK-1, NEW DELHI-110048 India
(72)**Name of Inventor :**
**1)CHATURVEDI, ASHOK**

(57) Abstract :
A. method (100) of making an integrated handle (304) on at least one side gusset (308) of a flexible package (300) is provided. The method (100) includes steps of sealing a handle patch (222) on at least one half width of the side gusset laminate (218). Further, the method (100) provides parallel openings on the handle patch (222) such that a centre line of the two parallel openings coincides with centre lines of each half of the side gusset laminate (218). A cover patch (226) is sealed over the handle patch (222) overlapping the edges of the handle patch (222) and simultaneously with the side gusset laminate (218) all around, such that a predefined area is left unsealed between the two parallel openings. The longitudinal edges of the side gusset laminate (218) are folded such that the handle patch (222) comes on the outer surface of the continuous open tube (242) being formed. The continuous open tube (242) is thereby used for manufacturing the flexible package (300).

No. of Pages : 19 No. of Claims : 12

(12) PATENT APPLICATION PUBLICATION
(21) Application No.1718/DEL/2015 A
(19) INDIA
(22) Date of filing of Application :09/06/2015
(43) Publication Date : 17/07/2015

(54) Title of the invention : ELECTRIC GENERATOR THAT DOES NOT REQUIRE FUEL

| | |
|---|---|
| (51) International classification | :F03G7/08, H02K7/18 |
| (31) Priority Document No | :NA |
| (32) Priority Date | :NA |
| (33) Name of priority country | :NA |
| (86) International Application No | :NA |
| Filing Date | :NA |
| (87) International Publication No | : NA |
| (61) Patent of Addition to Application Number | :NA |
| Filing Date | :NA |
| (62) Divisional to Application Number | :NA |
| Filing Date | :NA |

(71)**Name of Applicant :**
**1)SATYAM RAJ**
Address of Applicant :M-98 CANNAUGHT PLACE WESTERN INDIA BUILDING OPPOSITE TO HALDIRAM NEW DELHI-110001, INDIA
(72)**Name of Inventor :**
**1)SATYAM RAJ**

(57) Abstract :
This invention deals how to produce desired amount electricity without using any type of fuel. It consist of a belt in which highly charged blocks are fixed and that belt is tied to rim with tight brakes. There are also a combination of conducting blocks in which one end is insulator and has some charge to that of the blocks in the belt. This charge is small. Due to the arrangement of blocks and belt automatically force will be created which will increase the amount of current per unit time. The amount can be controlled by the brakes in the rim. To create total vacuum in the chamber of arrangement heating and cooling method will be used as described in the description. Rectifier is used to join all small branches of current into a big source of current with the help of circular metal disk with insulator along diameter direct current is converted into alternating current.

No. of Pages : 20 No. of Claims : 7

(12) PATENT APPLICATION PUBLICATION
(21) Application No.1848/DEL/2015 A
(19) INDIA
(22) Date of filing of Application :22/06/2015
(43) Publication Date : 17/07/2015

(54) Title of the invention : AGENT BASED SECURE ROUTING SYSTEM FOR COMPLETE PRIVACY

| | |
|---|---|
| (51) International classification | :H04M3/00, H04M5/00 |
| (31) Priority Document No | :NA |
| (32) Priority Date | :NA |
| (33) Name of priority country | :NA |
| (86) International Application No | :NA |
| Filing Date | :NA |
| (87) International Publication No | : NA |
| (61) Patent of Addition to Application Number | :NA |
| Filing Date | :NA |
| (62) Divisional to Application Number | :NA |
| Filing Date | :NA |

(71)**Name of Applicant :**
**1)SAJJAD AHMED**
Address of Applicant :HOUSE NO. 14, WARD 7, RAJOURI, JAMMU & KASHMIR, 185131, INDIA.
(72)**Name of Inventor :**
**1)SAJJAD AHMED**
**2)M.AHSAN CHISHTI**

(57) Abstract :
Computer networks are present everywhere now a day. A major hardware component of these networks is router. A router helps in finding the path to destination. It does so by checking packet headers which contain Internet protocol (IP) address of the destination. In some networks such as mobile adhoc networks, Wireless Mesh networks etc the node itself can act as a router as well making the transient packets in the network more vulnerable to snooping. In such networks, source and destination privacy becomes a major concern. More over when data is transported over internet, the router can see the source and destination leading to privacy violations. The major reason of privacy violation, whether over internet or adhoc networks, is presence of source and destination IP addresses in packet header. In present techniques data present in the packet can be encrypted but the headers cannot be encrypted as headers are needed by router to perform routing. If headers are encrypted to perform routing, router needs encryption keys which again is not a secure technique. The claimed method removes need of such unencrypted headers. Instead a code is moved to the router called agent, which handles the encrypted packets as well as knows the destination of the packet. This Agent can be trusted with encryption keys by which packets are encrypted. These keys are meant for the destination agent. The destination agent decrypts the packets with the key and forwards the packets to the above networking layers. As a result, not only a secure channel is created between source and destination of traffic but a secure routing is performed at router as well revealing nothing about the source and destination to the intermediate devices.

No. of Pages : 5 No. of Claims : 3

(12) PATENT APPLICATION PUBLICATION
(21) Application No.1801/DEL/2014 A
(19) INDIA
(22) Date of filing of Application :03/07/2014
(43) Publication Date : 17/07/2015

(54) Title of the invention : A SYSTEM AND METHOD FOR CREATING A PLATFORM TO DELIVER AND SHARE CUTOMIZED BUSINESS INSIGHTS

| | |
|---|---|
| (51) International classification | :G06Q30/02, H04L29/08 |
| (31) Priority Document No | :NA |
| (32) Priority Date | :NA |
| (33) Name of priority country | :NA |
| (86) International Application No | :NA |
| Filing Date | :NA |
| (87) International Publication No | : NA |
| (61) Patent of Addition to Application Number | :NA |
| Filing Date | :NA |
| (62) Divisional to Application Number | :NA |
| Filing Date | :NA |

(71)**Name of Applicant :**
**1)EVALUESERVE.COM PVT. LTD.**
Address of Applicant :TOWER A, SECOND FLOOR, UNITECH WORLD, CYBER PARK, JHARSA, SECTOR -39, GURGAON-122002, HARYANA, INDIA.
(72)**Name of Inventor :**
**1)MARC VOLLENWEIDER**

(57) Abstract :
Various aspects of a system and a method for creating a platform to deliver and share customized business insights are disclosed herein. The system comprises one or more processors to implement reusable knowledge objects and knowledge models at the backend of the system, to create the platform that delivers and shares customized business insights. The one or more processors further implement multiple application programming interfaces (APIs) that automate form builders, rendered at the frontend of the system.

No. of Pages : 124 No. of Claims : 30

(12) PATENT APPLICATION PUBLICATION
(21) Application No.1640/DEL/2014 A
(19) INDIA
(22) Date of filing of Application :18/06/2014
(43) Publication Date : 17/07/2015

(54) Title of the invention : INTELLIGENT POWER SAVING LED DEVICE (I PSLD) FOR INDIVIDUAL STREET & OUTDOOR LIGHTS.

| | |
|---|---|
| (51) International classification | :F21S2/00, G02B6/26, |
| (31) Priority Document No | :NA |
| (32) Priority Date | :NA |
| (33) Name of priority country | :NA |
| (86) International Application No | :NA |
| Filing Date | :NA |
| (87) International Publication No | : NA |
| (61) Patent of Addition to Application Number | :NA |
| Filing Date | :NA |
| (62) Divisional to Application Number | :NA |
| Filing Date | :NA |

(71)**Name of Applicant :**
**1)ONIL BHATNAGAR**
Address of Applicant :12, NAVIN PARK, JINDAL ROAD, SAHIBABAD, GHAZIABAD-201005, Uttar Pradesh India
(72)**Name of Inventor :**
**1)ONIL BHATNAGAR**

(57) Abstract :
a) Using an Astronomical timer or photocell or both as combination and microprocessor to phase a pre-set timing derived or sensed on 24- hour cycle to local solar events. b) Consisting of an electrical circuit containing a cost-effective microprocessor, to phase a pre-set 24-hour cycle to local solar events.

No. of Pages : 14 No. of Claims : 6

(12) PATENT APPLICATION PUBLICATION
(21) Application No.1713/DEL/2014 A
(19) INDIA
(22) Date of filing of Application :26/06/2014
(43) Publication Date : 17/07/2015

(54) Title of the invention : SYSTEM AND METHOD FOR SERVICE BROADCAST BETWEEN USERS

| | | |
|---|---|---|
| (51) International classification | :G06Q30/06 | (71)**Name of Applicant :** |
| (31) Priority Document No | :NA | **1)RAHUL LEEKHA** |
| (32) Priority Date | :NA | Address of Applicant :THE SHIVALIKA RUGS RISALU ROAD, PANIPAT HARYANA-132103 India |
| (33) Name of priority country | :NA | (72)**Name of Inventor :** |
| (86) International Application No | :NA | **1)RAHUL LEEKHA** |
| Filing Date | :NA | |
| (87) International Publication No | : NA | |
| (61) Patent of Addition to Application Number | :NA | |
| Filing Date | :NA | |
| (62) Divisional to Application Number | :NA | |
| Filing Date | :NA | |

(57) Abstract :
The present invention is generally related to systems and methods for broadcasting multiple coordinated subject line message and a method to an emergency aid. A systems and methods for determining the location of a one user and depending on the basis of request for service line made by the one user.

No. of Pages : 13 No. of Claims : 8

(12) PATENT APPLICATION PUBLICATION
(21) Application No.1868/DEL/2015 A
(19) INDIA
(22) Date of filing of Application :23/06/2015
(43) Publication Date : 17/07/2015

(54) Title of the invention : SOLAR HYBRID AIR CONDITIONING SYSTEM

(51) International classification :F25D23/00
(31) Priority Document No :NA
(32) Priority Date :NA
(33) Name of priority country :NA
(86) International Application No :NA
Filing Date :NA
(87) International Publication No : NA
(61) Patent of Addition to Application Number :NA
Filing Date :NA
(62) Divisional to Application Number :NA
Filing Date :NA

(71)**Name of Applicant :**
**1)Gattani, Manoj Kumar**
Address of Applicant :Post Office - Himmatsar (334802), District - Bikaner, Rajasthan, India
(72)**Name of Inventor :**
**1)Gattani, Manoj Kumar**

(57) Abstract :
A solar hybrid air conditioning system adapted for converting waste heat energy into useful heat energy. The system includes a plurality of heat absorbing units, a heat exchange unit, a coolant, a condenser, an expansion valve, a control unit and an evaporator. The plurality of heat absorbing units is adapted to absorb the waste heat energy from the environment. The heat exchange unit is adapted to exchange the said absorbed heat energy to the compressor unit. The said compressor unit utilizes the said absorbed heat energy for increasing the temperature and pressure of the coolant. The condenser is adapted to condense the said high temperature and pressure coolant into a liquid. The expansion valve is adapted to reduce the pressure and temperature of the said liquid coolant. The evaporator is adapted to evaporate the said coolant from a liquid state into a gaseous state.

No. of Pages : 17 No. of Claims : 11

(12) PATENT APPLICATION PUBLICATION
(21) Application No.4784/DELNP/2015 A
(19) INDIA
(22) Date of filing of Application :02/06/2015
(43) Publication Date : 17/07/2015

(54) Title of the invention : METHOD FOR MEASURING THICKNESS OF BOILER WATER TUBE

(51) International classification :F22B37/02,G01B17/02,G01N29/04
(31) Priority Document No :2013138994
(32) Priority Date :02/07/2013
(33) Name of priority country :Japan
(86) International Application No :PCT/JP2014/052746
Filing Date :06/02/2014
(87) International Publication No :WO 2015/001812
(61) Patent of Addition to Application Number :NA
Filing Date :NA
(62) Divisional to Application Number :NA
Filing Date :NA

(71)**Name of Applicant :**
**1)MITSUBISHI MATERIALS CORPORATION**
Address of Applicant :3 2 Otemachi 1 chome Chiyoda ku Tokyo 1008117 Japan
(72)**Name of Inventor :**
**1)OGUMA Nobuhiro**
**2)HIROSE Shimpei**
**3)SYOJI Kazuya**
**4)NAKAMURA Masatoshi**
**5)YASUDA Yasuo**

(57) Abstract :
In the present invention an inspection hole (17) is formed at the longitudinal direction lateral surface of a boiler water tube (10a) the base side of a guide pipe (16) is connected to the inspection hole (17) and a closing member (24) is continuously attached to the guide pipe (16). When the thickness of the boiler water tube (10a) is measured the closing member (24) is detached from the guide pipe (16) an ultrasound probe (18) is inserted from the tip side of the guide pipe (16) into the boiler water tube (10a) and the ultrasound probe (18) is caused to move within the boiler water tube (10a).

No. of Pages : 27 No. of Claims : 7

(12) PATENT APPLICATION PUBLICATION
(21) Application No.1809/DEL/2015 A
(19) INDIA
(22) Date of filing of Application :17/06/2015
(43) Publication Date : 17/07/2015

(54) Title of the invention : A SYSTEM AND METHOD FOR CONTROLLING AN ELECTRICAL POWER DISTRIBUTION SYSTEM

| | | |
|---|---|---|
| (51) International classification | :H02J13/00, H02J3/00 | (71)**Name of Applicant :** |
| (31) Priority Document No | :NA | **1)HCL Technologies Limited** |
| (32) Priority Date | :NA | Address of Applicant :B-39, Sector 1, Noida 201301, Uttar Pradesh, India |
| (33) Name of priority country | :NA | (72)**Name of Inventor :** |
| (86) International Application No | :NA | **1)DAS, Nilay Kanti** |
| Filing Date | :NA | |
| (87) International Publication No | : NA | |
| (61) Patent of Addition to Application Number | :NA | |
| Filing Date | :NA | |
| (62) Divisional to Application Number | :NA | |
| Filing Date | :NA | |

(57) Abstract :
Disclosed is a method and system for controlling electrical power distribution system based on a neural network schema. In one aspect, the method comprises measuring a plurality of electric parameters of an electrical power distribution system, wherein the plurality of electric parameters are measured by the network based upon a neural network schema. The method further comprises generating one or more patterns by analyzing the plurality of electric parameters based on a machine learning methodology. The method further comprises communicating the plurality of electric parameters and the one or more patterns to one or more other systems in the network over a power line communication channel. Furthermore, the method comprises executing one or more decisive actions based on the plurality of electric parameters, the one or more patterns and a predefined criterion.

No. of Pages : 22 No. of Claims : 12

(12) PATENT APPLICATION PUBLICATION
(21) Application No.2539/MUM/2015 A
(19) INDIA
(22) Date of filing of Application :02/07/2015
(43) Publication Date : 17/07/2015

(54) Title of the invention : POWER FLAME: TO CONVERT POTENTIAL HEAD INTO USEFUL HIGH KINETIC HEAD IN OPEN FLOW WAYS (OPEN CHANNELS)

| | | |
|---|---|---|
| (51) International classification | :G01F 1/00, G01F 15/00 | (71)**Name of Applicant :**<br>**1)KALBHOR MANGESH VASANT**<br>Address of Applicant :A/P-PANDARE, TAL-BARAMATI, DIST-PUNE, PIN-413110 Maharashtra India |
| (31) Priority Document No | :NA | (72)**Name of Inventor :** |
| (32) Priority Date | :NA | **1)KALBHOR MANGESH VASANT** |
| (33) Name of priority country | :NA | |
| (86) International Application No | :NA | |
| Filing Date | :NA | |
| (87) International Publication No | : NA | |
| (61) Patent of Addition to Application Number | :NA | |
| Filing Date | :NA | |
| (62) Divisional to Application Number | :NA | |
| Filing Date | :NA | |

(57) Abstract :
Power Flume is a construction in an open flow way (open channel) where the bed slope of the flow way is very low, and it converts potential head at entry of the flume into high useful kinetic head at the throat portion then converts it back into potential head at exit of the flume. This type of construction is made to increase the velocity of water in open flow way from subcritical velocity to supercritical velocity at throat i.e. velocity of water can be increased about 5 to 7 times of subcritical flow (flow at entry of the flume). Various types of constructions are used for various sizes of open flow ways for minimum afflux at entry side of the power flume. The hump adjustment mechanism is provided to maintain the constant supercritical velocity at any one section of throat portion of the flume. In overflow conditions bypass gates are provided to bypass excess water and maintain the supercritical velocity constant. Hump adjustment mechanism and bypass gates are operated by electric motor and motor is controlled by electronic controller or PLC controller, by sensing water level at entry of the flume and the supercritical velocity of water at any one section of throat where the velocity is kept constant.

No. of Pages : 10 No. of Claims : 10

(12) PATENT APPLICATION PUBLICATION
(21) Application No.3291/MUM/2014 A
(19) INDIA
(22) Date of filing of Application :15/10/2014
(43) Publication Date : 17/07/2015

(54) Title of the invention : PRODUCTION OF ELECTRICITY BY EXPANSION AND CONTRACTION IN VOLUME OF SOLVENT USING SOLAR ENERGY

| | |
|---|---|
| (51) International classification | :B60L8/00, F03G6/00, F24J 2/00 |
| (31) Priority Document No | :NA |
| (32) Priority Date | :NA |
| (33) Name of priority country | :NA |
| (86) International Application No | :NA |
| Filing Date | :NA |
| (87) International Publication No | : NA |
| (61) Patent of Addition to Application Number | :NA |
| Filing Date | :NA |
| (62) Divisional to Application Number | :NA |
| Filing Date | :NA |

(71)**Name of Applicant :**
**1)DIPAKKUMAR RASIKLAL DADHANIYA**
Address of Applicant :VRAJ SUDAMA NAGAR, BH. PANCHSHEEL SOCITY., JETPUR. DIST : RAJKOT Gujarat India
(72)**Name of Inventor :**
**1)DIPAKKUMAR RASIKLAL DADHANIYA**

(57) Abstract :
Sunlight is abundant source of energy. Solar energy is used for heating water. Controlled flow of this hot water along with normal water would regulate temperature of solvent contained in closed chambers. Expansion and contraction in the volume of solvent can be achieved by varying its temperature in controlled way. This controlled increase and decrease in volume of solvent is used for mechanical rotation of crank shaft which is further connected with gear box and generator. This set up is used for production of electricity. Solar energy is available in many countries round the year. Hot water can be stored in insulated water tanks and hence this process can be continued for production of electricity on 24 hour basis. This process is free from pollution and cheaper as compared to other methods of electricity production. No input material is required once production process is started.

No. of Pages : 17 No. of Claims : 8

(12) PATENT APPLICATION PUBLICATION
(21) Application No.2573/MUM/2015 A
(19) INDIA
(22) Date of filing of Application :04/07/2015
(43) Publication Date : 17/07/2015

(54) Title of the invention : A MOUNTING STRUCTURE FOR MAGNETS

| | |
|---|---|
| (51) International classification | :B62J11/00, F16B2/06 |
| (31) Priority Document No | :NA |
| (32) Priority Date | :NA |
| (33) Name of priority country | :NA |
| (86) International Application No | :NA |
| Filing Date | :NA |
| (87) International Publication No | : NA |
| (61) Patent of Addition to Application Number | :NA |
| Filing Date | :NA |
| (62) Divisional to Application Number | :NA |
| Filing Date | :NA |

(71)**Name of Applicant :**
**1)Tipole Pralhad**
Address of Applicant :Flat No.5,S.NO.161/3/3,Suyog Society,Jadhav Nagar,Raykar mala,Dhayari,Pune Maharashtra India
**2)Bhojwani Virendra**
**3)Babar Harshal**
**4)Deshmukh Suhas**
(72)**Name of Inventor :**
**1)Tipole Pralhad**
**2)Bhojwani Virendra**
**3)Babar Harshal**
**4)Deshmukh Suhas**

(57) Abstract :
A mounting structure for magnets comprises a first mounting element and a second mounting element having a profile identical to the first mounting element. The second mounting element is coupled with the first mounting element to define the mounting structure. The mounting structure further comprises at least one support plate engagable with each of the mounting elements, wherein, in an engaged configuration, the support plates and the mounting elements define an enclosure to accommodate at least one magnet. A passageway is configured operatively between the support plates and is adapted to allow a passage of a conduit therethrough.

No. of Pages : 18 No. of Claims : 7

(12) PATENT APPLICATION PUBLICATION
(21) Application No.2108/MUM/2015 A
(19) INDIA
(22) Date of filing of Application :31/05/2015
(43) Publication Date : 17/07/2015

(54) Title of the invention : A SYSTEM AND METHOD FOR MARATHI TEXT-TO-SPEECH WITH NATURAL SPEECH OUTPUT

(51) International classification :G10L13/00
(31) Priority Document No :NA
(32) Priority Date :NA
(33) Name of priority country :NA
(86) International Application No :PCT// /
Filing Date :01/01/1900
(87) International Publication No : NA
(61) Patent of Addition to Application Number :NA
Filing Date :NA
(62) Divisional to Application Number :NA
Filing Date :NA

(71)**Name of Applicant :**
**1)Manjare Chandraprabha Anil**
Address of Applicant :C-202, Laxmi Vilas, Mukundnagar, Pune-411037, MAHARASHTRA, INDIA
(72)**Name of Inventor :**
**1)Manjare Chandraprabha Anil**
**2)Shirbahadurkar Suresh Damodar**
**3)Manjare Anil Shripati**
**4)Manjare Akshay Anil**

(57) Abstract :
A system for Marathi text to speech conversion with natural speech, with respect to consideration of place of Anuswar, said system comprising identifiers and rule enginers in order to determine pornounciation of text components based on placement of Anuswar.

No. of Pages : 22 No. of Claims : 9

(12) PATENT APPLICATION PUBLICATION
(21) Application No.2542/MUM/2015 A
(19) INDIA
(22) Date of filing of Application :02/07/2015
(43) Publication Date : 17/07/2015

(54) Title of the invention : LIPOSOMAL DRY POWDER INHALER (LDPI) OF AZITHROMYCIN

| | |
|---|---|
| (51) International classification | :A61P11/00,, A61K31/00 |
| (31) Priority Document No | :NA |
| (32) Priority Date | :NA |
| (33) Name of priority country | :NA |
| (86) International Application No | :NA |
| Filing Date | :NA |
| (87) International Publication No | : NA |
| (61) Patent of Addition to Application Number | :NA |
| Filing Date | :NA |
| (62) Divisional to Application Number | :NA |
| Filing Date | :NA |

(71)**Name of Applicant :**
**1)Dr. Hetal Paresh Thakkar**
Address of Applicant :Pharmacy Department, Faculty of Technology & Engineering, The M.S. University of Baroda, Kala Bhawan, Vadodara -390001 Gujarat India
**2)THAKOR, Sunilkumar Pratapsinh**
**3)SHRIVASTAVA, Praveen Kumar**
(72)**Name of Inventor :**
**1)Dr. Hetal Paresh Thakkar**
**2)THAKOR, Sunilkumar Pratapsinh**
**3)SHRIVASTAVA, Praveen Kumar**

(57) Abstract :
The invention relates to a stable liposomal dry powder inhaler (LDPI) formulation of Azithromycin for pulmonary delivery which provides prolonged and site specific release. The present invention also relates to the LDPI formulation of Azithromycin which make it possible to reduce the dose of Azithromycin, exposure to systemic circulation and site specific side effects.

No. of Pages : 30 No. of Claims : 6

(12) PATENT APPLICATION PUBLICATION
(21) Application No.3563/MUM/2014 A
(19) INDIA
(22) Date of filing of Application :12/11/2014
(43) Publication Date : 17/07/2015

(54) Title of the invention : A PROGRAMMABLE REGULATOR RECTIFIER FOR AUTOMOTIVE BATTERY CHARGING APPLICATIONS OF A TWO WHEELED VEHICLE.

(51) International classification :G05F1/62
(31) Priority Document No :NA
(32) Priority Date :NA
(33) Name of priority country :NA
(86) International Application No :NA
Filing Date :NA
(87) International Publication No : NA
(61) Patent of Addition to Application Number :NA
Filing Date :NA
(62) Divisional to Application Number :NA
Filing Date :NA

(71)**Name of Applicant :**
**1)STAR ENGINEERS (I) PVT LTD**
Address of Applicant :GATE NO 67/68, JYOTIBA NAGAR, TALAWADE, PUNE-412 114 Maharashtra India
(72)**Name of Inventor :**
**1)DIVYA RAMRAIKA**

(57) Abstract :
A programmable regulator rectifier for automotive battery charging applications of a two wheeled vehicle having a few discrete components and providing programmable feedback control for improved efficiency in battery charging applications is disclosed.

No. of Pages : 35 No. of Claims : 6

(12) PATENT APPLICATION PUBLICATION
(21) Application No.2569/MUM/2015 A
(19) INDIA
(22) Date of filing of Application :04/07/2015
(43) Publication Date : 17/07/2015

(54) Title of the invention : METHOD AND SYSTEM FOR ENABLING MOBILE BASED FINANCIAL TRANSACTIONS USING QR CODE AND FACIAL BIOMETRICS

(51) International classification :G06F19/00
(31) Priority Document No :NA
(32) Priority Date :NA
(33) Name of priority country :NA
(86) International Application No :NA
Filing Date :NA
(87) International Publication No : NA
(61) Patent of Addition to Application Number :NA
Filing Date :NA
(62) Divisional to Application Number :NA
Filing Date :NA

(71)**Name of Applicant :**
**1)Naresh Laxminarayan Grover**
Address of Applicant :245H, Raj Laxmi Marg, Civil Lines, Nagpur. Maharashtra India
(72)**Name of Inventor :**
**1)Naresh Laxminarayan Grover**

(57) Abstract :
The present disclosure relates to a system and method for ensuring safe and secure method for financial transaction without having presented a physical card to a merchant. The invention employs processing of payments based on QR code and user authentication means like facial biometrics or voice pattern recognition. The invention is a safer way to substitute the use of plastic cards.

No. of Pages : 21 No. of Claims : 11

(12) PATENT APPLICATION PUBLICATION
(21) Application No.2599/MUM/2015 A
(19) INDIA
(22) Date of filing of Application :07/07/2015
(43) Publication Date : 17/07/2015

(54) Title of the invention : A SYSTEM AND METHOD FOR GAINING ACCESS USING FACE DETECTION

| | |
|---|---|
| (51) International classification | :G07C9/00, G06K9/00 |
| (31) Priority Document No | :NA |
| (32) Priority Date | :NA |
| (33) Name of priority country | :NA |
| (86) International Application No | :NA |
| Filing Date | :NA |
| (87) International Publication No | : NA |
| (61) Patent of Addition to Application Number | :NA |
| Filing Date | :NA |
| (62) Divisional to Application Number | :NA |
| Filing Date | :NA |

(71)**Name of Applicant :**
**1)NARESH LAXMINARAYAN GROVER**
Address of Applicant :245H, Raj Laxmi Marg, Civil Lines, Nagpur- Maharashtra India
(72)**Name of Inventor :**
**1)NARESH LAXMINARAYAN GROVER**

(57) Abstract :
A system and method for gaining access using face detection comprises an application which executes as an assistive technique in managing Hotel related services by face recognition and detection method examined by a face detection device. The said application provides access to services such as room booking, check-in, check-out, paid services, and the like by face recognition and detection techniques. Image of user is used as an authentication media for all face recognition and detection techniques.

No. of Pages : 26 No. of Claims : 13

(12) PATENT APPLICATION PUBLICATION
(21) Application No.3675/MUM/2014 A
(19) INDIA
(22) Date of filing of Application :20/11/2014
(43) Publication Date : 17/07/2015

(54) Title of the invention : A THREE PHASE REGULATOR RECTIFIER FOR AUTOMOTIVE BATTERY CHARGING AND CONTROL APPLICATION SUITABLE FOR OF A TWO WHEELED VEHICLE

| | |
|---|---|
| (51) International classification | :H02P9/00, G05F 5/00 |
| (31) Priority Document No | :NA |
| (32) Priority Date | :NA |
| (33) Name of priority country | :NA |
| (86) International Application No | :NA |
| Filing Date | :NA |
| (87) International Publication No | : NA |
| (61) Patent of Addition to Application Number | :NA |
| Filing Date | :NA |
| (62) Divisional to Application Number | :NA |
| Filing Date | :NA |

(71)**Name of Applicant :**
**1)Star Engineers (I) Pvt Ltd**
Address of Applicant :Gate No 67/68, Jyotiba Nagar, Talawade. Pune-412 I14 Maharashtra India
(72)**Name of Inventor :**
**1)DIVYA RAMRAIKA**

(57) Abstract :
A three phase regulator rectifier for automotive battery charging applications of a two wheeled vehicle having a few discrete components and providing programmable feedback control for improved efficiency in battery charging applications is disclosed.

No. of Pages : 36 No. of Claims : 6

(12) PATENT APPLICATION PUBLICATION
(21) Application No.2494/MUM/2015 A
(19) INDIA
(22) Date of filing of Application :30/06/2015
(43) Publication Date : 17/07/2015

(54) Title of the invention : DESIGN OF AUTOMATIC FIVE FAULTS INDUCTION MOTOR PROTECTION PANEL.

| | |
|---|---|
| (51) International classification | :H02H 7/00,H02H9/00 |
| (31) Priority Document No | :NA |
| (32) Priority Date | :NA |
| (33) Name of priority country | :NA |
| (86) International Application No | :NA |
| Filing Date | :NA |
| (87) International Publication No | : NA |
| (61) Patent of Addition to Application Number | :NA |
| Filing Date | :NA |
| (62) Divisional to Application Number | :NA |
| Filing Date | :NA |

(71)**Name of Applicant :**
**1)NITIN K. DHOTE**
Address of Applicant :25, SWAPNAKALA, GANESH G.N.SOCIETY, PANNASE LAYOUT, NAGPUR-440022 Maharashtra India
**2)VERONICA RAJESH CHAVAN**
**3)NEEL HARAKCHAND GALA**
(72)**Name of Inventor :**
**1)NITIN K. DHOTE**
**2)VERONICA RAJESH CHAVAN**
**3)NEEL HARAKCHAND GALA**

(57) Abstract :
Induction motors account half of the electric power consumed across the world. They are very important component of industry. Although, these electromechanical devices are highly reliable, they are susceptible to many types of faults. It is therefore necessary to design suitable motor protection panel for protection of motor. Loss of motor means loss of production of goods, which in turn causes financial losses. The faults can be minimized by improving the system design, reducing the number of faults, improving the quality of protection system and employing a reliable protection system. However the faults cannot be eliminated completely by obsolete protective devices therefore there is an urgent need of reliable and automatic fault clearing system. The main motivation behind the project was to prepare automatic motor protection panel with minimum cost, as the panels which are present in industries are very costly and do not include all major faults in single panel. Beside industrial use the panel can be used to give hands on experience on the industrial equipments to engineering students, as virtual fault clearing system has also been included in the motor protection panel. The designed motor protection panel has employed multifunction meter which measures several electrical quantities which facilitates the performance of several practicals based on induction motor protection faults for the demonstrations to the engineering students.)

No. of Pages : 28 No. of Claims : 2

(12) PATENT APPLICATION PUBLICATION
(21) Application No.2511/MUM/2015 A
(19) INDIA
(22) Date of filing of Application :01/07/2015
(43) Publication Date : 17/07/2015

(54) Title of the invention : A METHOD OF DETECTION AND IDENTIFICATION OF FUNGAL PATHOGENS USING 5.8S GENE SEQUENCING

| | | |
|---|---|---|
| (51) International classification | :G01N33/48, C12Q1/68 | (71)**Name of Applicant :** |
| (31) Priority Document No | :NA | **1)VISHWESH RAJENDRA POTKAR** |
| (32) Priority Date | :NA | Address of Applicant :4/45, B.I.T. BLOCK, DR. AMBEDKAR ROAD, PAREL, MUMBAI-400 012, MAHARASHTRA, INDIA. |
| (33) Name of priority country | :NA | **2)DR. PRATIMA SHARAD JADHAV** |
| (86) International Application No | :NA | (72)**Name of Inventor :** |
| Filing Date | :NA | **1)VISHWESH RAJENDRA POTKAR** |
| (87) International Publication No | : NA | **2)DR. PRATIMA SHARAD JADHAV** |
| (61) Patent of Addition to Application Number | :NA | |
| Filing Date | :NA | |
| (62) Divisional to Application Number | :NA | |
| Filing Date | :NA | |

(57) Abstract :
This invention involves combining polymerase chain reaction (PCR) with genetic sequencing to produce a genetic sequence unique to an individual organism, amplifying DNA material using universal fungal primers and PCR techniques,

No. of Pages : 17 No. of Claims : 9

(12) PATENT APPLICATION PUBLICATION
(21) Application No.2507/MUM/2015 A
(19) INDIA
(22) Date of filing of Application :01/07/2015
(43) Publication Date : 17/07/2015

(54) Title of the invention : INTRA VAGINAL RING (IVR) BEARING DEHYDRATED REHYDRATED VESICLES (DRV) LOADED WITH RALOXIFENE HYDROCHLORIDE AND LEUPROLIDE ACETATE

| | |
|---|---|
| (51) International classification | :A61K9/00, A61K31/57 |
| (31) Priority Document No | :NA |
| (32) Priority Date | :NA |
| (33) Name of priority country | :NA |
| (86) International Application No | :NA |
| Filing Date | :NA |
| (87) International Publication No | : NA |
| (61) Patent of Addition to Application Number | :NA |
| Filing Date | :NA |
| (62) Divisional to Application Number | :NA |
| Filing Date | :NA |

(71)**Name of Applicant :**
**1)DR. HETAL PARESH THAKKAR**
Address of Applicant :Pharmacy Department, Faculty of Technology & Engineering, The M.S. University of Baroda, Kala Bhawan, Vadodara -390001 Gujarat India
**2)PATEL ARPITA ASHOKBHAI**
(72)**Name of Inventor :**
**1)DR. HETAL PARESH THAKKAR**
**2)PATEL ARPITA ASHOKBHAI**

(57) Abstract :
The invention relates to Intra Vaginal Ring (IVR) which contains dehydrated rehydrated vesicles (DRV) dispersion comprising dual active ingredients, one is from Selective Estrogen Receptor Modulator (SERM) and another is from Gonadotropin Releasing Hormone Analogue (GnRH). The present invention also relates to the site specific release at uterus through vaginal route. The present invention also relates to the IVR comprising dehydrated rehydrated vesicles (DRV) dispersion which makes it possible to achieve sustained release, increase patient compliance as well bioavailability of active ingredients.

No. of Pages : 28 No. of Claims : 8

(12) PATENT APPLICATION PUBLICATION
(21) Application No.4564/CHE/2014 A
(19) INDIA
(22) Date of filing of Application :19/09/2014
(43) Publication Date : 17/07/2015

(54) Title of the invention : SUBWAY AUTOMATION SYSTEM

(51) International classification :G08G
(31) Priority Document No :NA
(32) Priority Date :NA
(33) Name of priority country :NA
(86) International Application No :NA
Filing Date :NA
(87) International Publication No : NA
(61) Patent of Addition to Application Number :NA
Filing Date :NA
(62) Divisional to Application Number :NA
Filing Date :NA

(71)**Name of Applicant :**
**1)PROF. J. KATHIRVELAN**
Address of Applicant :S. NO: 464/1H, 1ST MAIN ROAD, BALAJI NAGAR, DARAPADAVEDU, KATPADI - 632 007 Tamil Nadu India
**2)ADITYA PRATEEK**
**3)PARTHIBHAN. S**
**4)VIBHAV VISHWANATHSHINDE**
(72)**Name of Inventor :**
**1)PROF. J. KATHIRVELAN**
**2)ADITYA PRATEEK**
**3)PARTHIBHAN.S**
**4)VIBHAV VISHWANATHSHINDE**

(57) Abstract :
The amount of vehicles present in a city is increasing exponentially due to which the city management is not able to incorporate wide roads in the city. Since, the roads are not of desired dimensions that can incorporate the increased traffic, this leads to rise in amount of accidents or traffic jams. This project implements a solution that can be used reduced to traffic chaos across any One-way Subway/Road present in the country by efficiently reducing the human effort if deployed for controlling the chaos. This project also shows its reliability when the subway consists of blind curves at both the ends increasing the chaos drastically. In order to create an efficient system that can be used for the Traffic Automation along that road we employ various subsystems (AMR Sensor, PLC Controller, Boom Barriers, Countdown Timer and Traffic Lights) for obtaining the overall efficiency of the system. We utilize the Anisotropic Magneto-Resistive (AMR) sensors as a field device that is used for detecting the vehicle and the kind of vehicle if it is present on the subway. The output of the sensor is provided to the Controller that utilizes it for running an efficient algorithm and takes the necessary decisions instantly to monitor the traffic control inside the subway. The Boom barriers are used to constraint the users from entering the subway without the authorization provided by the controller. The countdown timer is used to increase the efficiency and safety of the system by constraining the time to close the boom barrier once the vehicle has left. The traffic lights are used for providing a visual aid to the users that when to utilize the subway and give them glance that it is right now utilized by the other side user. By incorporating this system, we can enhance the efficiency of One-way/Subway to the maximum by allowing the traffic flow of vehicles from one side at a timeleading to reduce the traffic chaos. This project helps in obtaining the safety measures to the maximum by providing the safety to the pedestrian walkers in the subway, bicycle users, and various other vehicles users that utilize for the transportation.

No. of Pages : 9 No. of Claims : 5

(12) PATENT APPLICATION PUBLICATION
(21) Application No.2762/CHE/2015 A
(19) INDIA
(22) Date of filing of Application :01/06/2015
(43) Publication Date : 17/07/2015

(54) Title of the invention : METHOD FOR UPDATING FIRMWARE AND CONFIGURATION FILE AND A FIRMWARE-CONFIGURATION FILE MANAGEMENT SYSTEM THEREFOR

| | | |
|---|---|---|
| (51) International classification | :G06F | (71)**Name of Applicant :** |
| (31) Priority Document No | :NA | **1)WIPRO LIMITED** |
| (32) Priority Date | :NA | Address of Applicant :Doddakannelli, Sarjapur Road, |
| (33) Name of priority country | :NA | Bangalore 560035, Karnataka, India. |
| (86) International Application No | :NA | (72)**Name of Inventor :** |
| Filing Date | :NA | **1)NILADRI DAS MAHAPATRA** |
| (87) International Publication No | : NA | **2)RAJESH THIRUVENKATAM** |
| (61) Patent of Addition to Application Number | :NA | **3)NITHIN KHILEDAAR** |
| Filing Date | :NA | |
| (62) Divisional to Application Number | :NA | |
| Filing Date | :NA | |

(57) Abstract :
The present disclosure relates to a method and a firmware and configuration file management system (FCMS) for automatically updating firmware and configuration file of a device manager. In one embodiment, the firmware management system receives one or more inputs associated with configuration data of one or more devices coupled with the device manager. Based on the inputs, a new firmware comprising a Modbus library and new configuration file is generated. The device manager periodically requests the FCMS for availability of update in the firmware and configuration file. If the availability of update is determined, the new firmware and new configuration file is downloaded into the device manager. Thus, the system periodically checks for update and download the updated firmware and configuration file automatically.

No. of Pages : 28 No. of Claims : 13

(12) PATENT APPLICATION PUBLICATION
(21) Application No.3368/CHE/2015 A
(19) INDIA
(22) Date of filing of Application :02/07/2015
(43) Publication Date : 17/07/2015

(54) Title of the invention : CELLULOSIC ETHANOL PRODUCTION FROM TERMITES BY USING BIOPROCESS-TECHNOLOGIES

(51) International classification :C12N
(31) Priority Document No :NA
(32) Priority Date :NA
(33) Name of priority country :NA
(86) International Application No :NA
Filing Date :NA
(87) International Publication No : NA
(61) Patent of Addition to Application Number :NA
Filing Date :NA
(62) Divisional to Application Number :NA
Filing Date :NA

(71)**Name of Applicant :**
**1)Dr. RAMESH MALOTHU**
Address of Applicant :Assistant Professor & Head, School of Biotechnology, Institute of Science and Technology, J.N.T. University, Kakinada, AndhraPradesh-533003, India.
(72)**Name of Inventor :**
**1)Dr. RAMESH MALOTHU**
**2)BINAYAK RAJ PANDEY**
**3)R.S.SANDEEP HENI**

(57) Abstract :
Exemplary embodiments of the present disclosure are directed towards a method for producing ethanol from a cellulosic substrate, wherein the method comprises the following steps of: isolating and culturing of a cellulolytic bacteria from a termite hindgut; screening of the cellulolytic bacteria to identify an isolate of cellulolytic bacterium with optimum cellulase activity; culturing the isolate of cellulolytic bacteria with optimum cellulase activity in an culture broth comprising a cellulosic substrate to initiate a saccharification process of the cellulosic substrate for a predetermined incubation period at a predetermined temperature and a predetermined rpm; Co-culturing a fermentation microorganism in the culture broth comprising the cellulosic substrate along with the isolate of cellulolytic bacteria for a predetermined incubation period at a predetermined temperature for ethanol production and obtaining ethanol as a desirable end product.

No. of Pages : 16 No. of Claims : 10

(12) PATENT APPLICATION PUBLICATION
(21) Application No.2758/CHE/2015 A
(19) INDIA
(22) Date of filing of Application :01/06/2015
(43) Publication Date : 17/07/2015

(54) Title of the invention : METHOD AND DEVICE FOR MANAGING COMPLIANCE OF ONE OR MORE NETWORK DEVICES

(51) International classification :G06Q
(31) Priority Document No :NA
(32) Priority Date :NA
(33) Name of priority country :NA
(86) International Application No :NA
Filing Date :NA
(87) International Publication No : NA
(61) Patent of Addition to Application Number :NA
Filing Date :NA
(62) Divisional to Application Number :NA
Filing Date :NA

(71)**Name of Applicant :**
**1)WIPRO LIMITED**
Address of Applicant :Doddakannelli, Sarjapur Road, Bangalore 560035, Karnataka, India.
(72)**Name of Inventor :**
**1)ANASUYA DEVI KOMPELLA**
**2)ASIF HUSAINSAHEB JAMADAR**
**3)ANAND RAJ JHA**

(57) Abstract :
Embodiments of the present disclosure disclose a method and a device for managing compliance of one or more network devices. The method comprises receiving one or more configuration changes of the one or more network devices. Also, the method comprises identifying each configuration change as one of a compliant configuration change and a non-compliant configuration change by correlating, the one or more configuration changes using a first set of parameters. Further, the method generating an impact value of the one or more configuration changes and generating a recommendation for the one or more network devices based on the impact value.

No. of Pages : 30 No. of Claims : 19

(12) PATENT APPLICATION PUBLICATION
(21) Application No.2808/CHE/2015 A
(19) INDIA
(22) Date of filing of Application :04/06/2015
(43) Publication Date : 17/07/2015

(54) Title of the invention : A METHOD FOR PREPARING INSECT REPELLING INCENSE

(51) International classification :C09D
(31) Priority Document No :NA
(32) Priority Date :NA
(33) Name of priority country :NA
(86) International Application No :NA
Filing Date :NA
(87) International Publication No : NA
(61) Patent of Addition to Application Number :NA
Filing Date :NA
(62) Divisional to Application Number :NA
Filing Date :NA

(71)**Name of Applicant :**
**1)SONTI SUBBARAO**
Address of Applicant :14-334, Edepalli, Machilipatnam, Krishna District, Andhra Pradesh India
**2)SONTI TARAKA SAI RAM**
(72)**Name of Inventor :**
**1)SONTI SUBBARAO**
**2)SONTI TARAKA SAI RAM**

(57) Abstract :
Exemplary embodiments of the present disclosure are directed towards a method for preparing a method for preparing a composition for insect repelling incense, by preparing a composition of ingredients comprising, Datura powder, Gum powder, Dust powder, Coal powder and Raallam powder. The method further comprising adding water to the composition for making a paste and moulding the paste to form a predetermined shape.

No. of Pages : 7 No. of Claims : 8

(12) PATENT APPLICATION PUBLICATION
(21) Application No.3327/CHE/2015 A
(19) INDIA
(22) Date of filing of Application :30/06/2015
(43) Publication Date : 17/07/2015

(54) Title of the invention : SYSTEM AND METHOD FOR MONITORING PERFORMANCE OF APPLICATIONS FOR AN ENTITY

(51) International classification :G06F
(31) Priority Document No :NA
(32) Priority Date :NA
(33) Name of priority country :NA
(86) International Application No :NA
Filing Date :NA
(87) International Publication No : NA
(61) Patent of Addition to Application Number :NA
Filing Date :NA
(62) Divisional to Application Number :NA
Filing Date :NA

(71)**Name of Applicant :**
**1)WIPRO LIMITED**
Address of Applicant :Doddakannelli, Sarjapur Road, Bangalore 560035, Karnataka, India.
(72)**Name of Inventor :**
**1)ROHIT SHARMA**
**2)AMIT KUMAR SINGH**

(57) Abstract :
Embodiments of present disclosure disclose a method for monitoring performance of applications for an entity. The method comprises retrieving performance information associated with an application from one or more sources. Then, performance of the application is analyzed using the retrieved performance information. Then, the method comprises identifying one or more entity variables affecting the performance of the application from the analyzed performance of the application. Then, at least one of trends of the performance of the application, deviations in the performance of the application, performance data related to the performance of the application and prediction data related to predicted performance of the application is determined based on the identification for monitoring the performance of the application for the entity.

No. of Pages : 49 No. of Claims : 19

(12) PATENT APPLICATION PUBLICATION
(21) Application No.3329/CHE/2015 A
(19) INDIA
(22) Date of filing of Application :30/06/2015
(43) Publication Date : 17/07/2015

(54) Title of the invention : SYSTEMS AND METHODS FOR MANAGING PERFORMANCE OF IDENTITY MANAGEMENT SERVICES

(51) International classification :G06F
(31) Priority Document No :NA
(32) Priority Date :NA
(33) Name of priority country :NA
(86) International Application No :NA
Filing Date :NA
(87) International Publication No : NA
(61) Patent of Addition to Application Number :NA
Filing Date :NA
(62) Divisional to Application Number :NA
Filing Date :NA

(71)**Name of Applicant :**
**1)WIPRO LIMITED**
Address of Applicant :Doddakannelli, Sarjapur Road, Bangalore 560035, Karnataka, India.
(72)**Name of Inventor :**
**1)SHANKAR SUNDARAM**

(57) Abstract :
This disclosure relates generally to identity management, and more particularly to systems and methods for managing performance of identity mamangement services. In one embodiment, a processor-implemented identity management performance control method is disclosed. The method may include receiving, via one or more hardware processors, an identity management architecture specification. The method may also include identifying, via the one or more hardware processors, a plurality of identity management attributes for the identity management architecture specification. The method may include selecting, via the one or more hardware processors, measurement criteria based on a target environment for implementing the identity management architecture. The method may include calculating, via the one or more hardware processors, an attribute measurement quotient for the plurality of identified identity management attributes using the selected measurement criteria.

No. of Pages : 41 No. of Claims : 20

(12) PATENT APPLICATION PUBLICATION
(21) Application No.2694/CHE/2015 A
(19) INDIA
(22) Date of filing of Application :28/05/2015
(43) Publication Date : 17/07/2015

(54) Title of the invention : COMPACT AND SIMPLE MULTI-YEAR CALENDAR

(51) International classification :B42D
(31) Priority Document No :NA
(32) Priority Date :NA
(33) Name of priority country :NA
(86) International Application No :NA
Filing Date :NA
(87) International Publication No : NA
(61) Patent of Addition to Application Number :NA
Filing Date :NA
(62) Divisional to Application Number :NA
Filing Date :NA

(71)**Name of Applicant :**
**1)Vemula Lakshmi Narayana**
Address of Applicant :VEMULA LAKSHMI NARAYANA Door No. 16-655, Nandalapadu, Tadipatri 515 411, Anantapur Dt, Andhra Pradesh India
(72)**Name of Inventor :**
**1)Vemula Lakshmi Narayana**

(57) Abstract :
The multi-year calendar device that can display all twelve months of any predetermined year with year number. The calendar device having two sheaves of leaves, which are year leaves and month leaves. Said all leaves are having holes to hang to a frame with the help of rings. Said all leaves are rotatable along an edge seam to expose another leaf below. Year leaves and month leaves are having same two colour-marks. Said each year leaf comprises a year number, seven days of a week and a colour-mark. Month leaves are two sets, said each set having twelve months of a year with dates. Said two sets are one regular year set and another one is leap year set. Said each set having a colour-mark. Said colour-marks of two sheaves are correlated to set the calendar.

No. of Pages : 27 No. of Claims : 9

(12) PATENT APPLICATION PUBLICATION
(21) Application No.2866/CHE/2015 A
(19) INDIA
(22) Date of filing of Application :09/06/2015
(43) Publication Date : 17/07/2015

(54) Title of the invention : METHOD AND DEVICE FOR DYNAMICALLY CONTROLLING QUALITY OF A VIDEO

| | | |
|---|---|---|
| (51) International classification | :A61B | (71)**Name of Applicant :** |
| (31) Priority Document No | :NA | **1)WIPRO LIMITED** |
| (32) Priority Date | :NA | Address of Applicant :Doddakannelli, Sarjapur Road, |
| (33) Name of priority country | :NA | Bangalore 560035, Karnataka, India. |
| (86) International Application No | :NA | (72)**Name of Inventor :** |
| Filing Date | :NA | **1)MANJUNATH RAMACHANDRA IYER** |
| (87) International Publication No | : NA | **2)JIJITH NADUMURI RAVI** |
| (61) Patent of Addition to Application Number | :NA | **3)VIJAY GARG** |
| Filing Date | :NA | |
| (62) Divisional to Application Number | :NA | |
| Filing Date | :NA | |

(57) Abstract :
Embodiments of the present disclosure disclose a method and a device for dynamically controlling quality of a video displaying on a display associated to an electronic device is provided. The method comprises detecting current eye position of a user and identifying at least one region of interest (ROI) on a display screen of the display device based on the current eye position of the user. Then, the method comprises predicting next position of the eye based on at least one of the current eye position of the user or the at least one ROI. Also, the method comprises converting the SD video in to a high definition (HD) video displayed on the ROI on the display screen associated with the current and next position of the eye. Further, the method comprises displaying the HD video on the ROI of the display screen.

No. of Pages : 30 No. of Claims : 20

(12) PATENT APPLICATION PUBLICATION
(21) Application No.2869/CHE/2015 A
(19) INDIA
(22) Date of filing of Application :09/06/2015
(43) Publication Date : 17/07/2015

(54) Title of the invention : SYSTEMS AND METHODS FOR INTERACTIVE SURFACE USING CUSTOM-BUILT TRANSLUCENT MODELS FOR IMMERSIVE EXPERIENCE

(51) International classification :G06F
(31) Priority Document No :NA
(32) Priority Date :NA
(33) Name of priority country :NA
(86) International Application No :NA
Filing Date :NA
(87) International Publication No : NA
(61) Patent of Addition to Application Number :NA
Filing Date :NA
(62) Divisional to Application Number :NA
Filing Date :NA

(71)**Name of Applicant :**
**1)WIPRO LIMITED**
Address of Applicant :Doddakannelli, Sarjapur Road, Bangalore 560035, Karnataka, India.
(72)**Name of Inventor :**
**1)SARAYU KOSANAM**

(57) Abstract :
The disclosure related generally to systems and methods for simple and affordable interactive translucent surface using custom-built translucent models for immersive experience. A first content is projected on the interactive translucent surface. An object is placed on at least one mounting means. The object is detected by an imaging device. Further, a second content is retrieved from a database, wherein the second content is mapped to the detected object. The first content is updated to the second content on the interactive translucent surface.

No. of Pages : 13 No. of Claims : 19

(12) PATENT APPLICATION PUBLICATION
(21) Application No.2870/CHE/2015 A
(19) INDIA
(22) Date of filing of Application :09/06/2015
(43) Publication Date : 17/07/2015

(54) Title of the invention : HEALTH READING BY PULSE IMAGE CHECK

(51) International classification :A61B
(31) Priority Document No :NA
(32) Priority Date :NA
(33) Name of priority country :NA
(86) International Application No :NA
Filing Date :NA
(87) International Publication No : NA
(61) Patent of Addition to Application Number :NA
Filing Date :NA
(62) Divisional to Application Number :NA
Filing Date :NA

(71)**Name of Applicant :**
**1)Mana Sanjari Parizi**
Address of Applicant :F - 303, Adarsh Residency, 47th Cross, Jayanagar 8th Block, Bangalore - 560 070, Karnataka, India
(72)**Name of Inventor :**
**1)Mana Sanjari Parizi**

(57) Abstract :
In this method, by imagining an Organ™s Image on the respective position of Traditional Chinese Pulse on the radial artery above the wrist, the organ can be felt and details like texture and function of the organ and related tissues can be identified. On some pulses, the entire system can be felt and on some, the surrounding tissues related to the same organ or system™s function can be felt. This is similar to a Live Dissection with more sensitivity that enables us to collect information about the whole system, organ and tissues till cellular and sometimes molecular level easily. By using these results and the data provided from Traditional Pulse Diagnosis which the practitioner is already familiar with, we can have excellent information about the past, present and future functioning of each part of the body. Therefore, we can suggest how a person can maintain their health till death.

No. of Pages : 19 No. of Claims : 3

## Publication After 18 Months:

**The following Patent Applications have been published under Section 11A (3) of The Patents (Amendment) Act, 2005. Any Person may file representation by way of opposition to the Controller of Patents at the appropriate office against the grant of the patent in the prescribed manner under section 25(1) of the Patents (Amendment) Act, 2005 read with the rule 55 of The Patents (Amendment) Rules, 2006:**


(12) PATENT APPLICATION PUBLICATION

(21) Application No.123/DEL/2014 A

(19) INDIA

(22) Date of filing of Application :16/01/2014

(43) Publication Date : 17/07/2015


(54) Title of the invention : A HERBAL PRODUCT TO AMELIORATE FLUOROSIS IN ANIMALS


| | |
|---|---|
| (51) International classification | :A61K |
| (31) Priority Document No | :NA |
| (32) Priority Date | :NA |
| (33) Name of priority country | :NA |
| (86) International Application No | :NA |
| Filing Date | :NA |
| (87) International Publication No | : NA |
| (61) Patent of Addition to Application Number | :NA |
| Filing Date | :NA |
| (62) Divisional to Application Number | :NA |
| Filing Date | :NA |



(71)**Name of Applicant :**

**1)INDIAN COUNCIL OF AGRICULTURAL RESEARCH**

Address of Applicant :KRISHI BHAWAN, DR. RAJENDRA PRASAD ROAD, NEW DELHI - 110001 India

(72)**Name of Inventor :**

**1)DR. DEY, SAHADEB**

**2)DR. SWARUP DEVENDRA**

**3)BRIJESH TYAGI**

**4)DR. SUMER SINGH RAWAT**



(57) Abstract :

A herbal formulation to ameliorate Fluoride toxicity in animals was developed by mixing Tamarind (Tamarindus indica) fruit pulp, drum stick (Moringa oleifera) unripe pods and whole oat grain powder in the ratio of 20:4:1 and molasses was used as vehicle to make it into pallet. The product was tested in experimental condition for its potential to reduce body fluoride burden by estimating fluoride concentration in serum, urine and bone. The safety of the formulation was ascertained after scientific validation of acute and chronic toxicity in rat model. There after the toxic effect of this formulation was studied in healthy calves @ 200mgl kg b.wt, daily for 90 days. Various parameters such as haematological changes, vital organ functions like heart, liver, kidney etc were evaluated. No evidence of toxicity could be detected at dosage 200 mg/kg orally for 90 days. There after the product was tried for its ameliorative potential in the field clinical cases of fluorosis in cattle and buffalo at the dose rate of 200 mg / Kg b. wt daily for 90 days. A total of Forty eight cattle and buffaloes having visible clinical lesions and elevated fluoride levels in serum (10.40ppm) and urine ((26.0 ppm) were selected for this study. The product significantly ($p<0.001$) reduced serum fluoride burden and increased excretion of Fluoride in urine. There was significant improvement of general health, production and performance of animals of treatment group. No adverse effect of the formulation could be detected during 3 months observation period. The cross validation studies of the formulation were performed at two fluoride endemic areas of Rajasthan viz. Singpur and Chittaurgargh areas of Rajasthan. The cross validation report of this product documented 58.81% reduction of serum fluoride concentration in cattle and buffaloes at day 90 post treatment along with marked improvement in clinical score and other parameters. More ever, the administration of this herbal product to cattle and buffalo for 90 days did not reveal any toxic effect of the formulation on the vital organs especially liver and kidney.


No. of Pages : 30 No. of Claims : 2

(12) PATENT APPLICATION PUBLICATION
(21) Application No.2201/DEL/2011 A
(19) INDIA
(22) Date of filing of Application :03/08/2011
(43) Publication Date : 17/07/2015

(54) Title of the invention : AN IMPROVED WATER PURIFICATION SYSTEM/UNIT AND PROCESS FOR PURIFICATION/REMOVAL OF IRON, ARSENIC, MANGANESE, FLUORIDE AND BACTERIA CONTAMINATED WATER

(51) International classification :C07C
(31) Priority Document No :NA
(32) Priority Date :NA
(33) Name of priority country :NA
(86) International Application No :NA
Filing Date :NA
(87) International Publication No : NA
(61) Patent of Addition to Application Number :NA
Filing Date :NA
(62) Divisional to Application Number :NA
Filing Date :NA

(71)**Name of Applicant :**
**1)DIRECTOR GENERAL DEFENCE RESEARCH & DEVELOPMENT ORGANISATION**
Address of Applicant :Ministry of Defence Govt of India Room No 348 B-Wing DRDO Bhawan Rajaji Marg New Delhi 110105 India
(72)**Name of Inventor :**
**1)BANERJEE SAUMEN;**
**2)DEVI RASHMI REKHA;**
**3)AGNIHOTRI GOURAV;**
**4)UMLONG LOHBORLANG MYLLIEM**
**5)RAUL PRASANT KUMAR;**
**6)KALITA HIRAN;**
**7)BORAH KUSUM;**
**8)SAIKIA LAKHSHYA BIJOY;**
**9)DAS BODHADITYA;**
**10)SINGH LOKENDRA;**

(57) Abstract :
The present invention relates to an improved water purification system and process adapted for the simultaneous removal/purification of contaminants iron, arsenic, manganese, fluoride and bacteria. The system comprises cylindrical main body having a first chamber and second chamber, an inlet comprising an air tight cap covering the said cylindrical main body substantially located above the first chamber adapted to avoid entrance of air inside the said system and an outlet for the tapping through of the final purified/clear water. The second chamber comprises a filtration unit having plurality of filtration columns. The columns are arranged in a predefined sequential manner adapted for removal/purification of iron, arsenic, manganese, fluoride and bacteria contaminated water.

No. of Pages : 30 No. of Claims : 20

(12) PATENT APPLICATION PUBLICATION
(19) INDIA
(22) Date of filing of Application :01/03/2012
(21) Application No.579/DEL/2012 A
(43) Publication Date : 17/07/2015

(54) Title of the invention : DOUBLE-DECK ELEVATOR AND INTER-CAGE DISTANCE ADJUSTMENT METHOD THEREFOR

(51) International classification :B23B
(31) Priority Document No :2011-050912
(32) Priority Date :09/03/2011
(33) Name of priority country :Japan
(86) International Application No :NA
Filing Date :NA
(87) International Publication No :NA
(61) Patent of Addition to Application Number :NA
Filing Date :NA
(62) Divisional to Application Number :NA
Filing Date :NA

(71)**Name of Applicant :**
**1)HITACH LTD.**
Address of Applicant :6-6, MARUNOUCHI 1-CHOME, CHIYODA-KU, TOKYO 100-8280, JAPAN.
(72)**Name of Inventor :**
**1)KANETH HIRONORI**
**2)FURUHASHI MASAYA**
**3)TORIYABE JUN**
**4)SUGIYAMA YOHEI**
**5)FUKATA HIRONORI**
**6)NAKAGAWA KOTO**
**7)ASHIKAWA SHINICHI**
**8)TATEYAMA HIROYUKI**

(57) Abstract :
A double-deck elevator comprises a distance adjustment mechanism of adjusting a distance between an upper cage and lower cage by moving a rope hanging the upper cage and the lower cage. The distance adjustment mechanism has a configuration that moves the rope beyond an ordinary distance adjustment range upon no passengers in the elevator.

No. of Pages : 24 No. of Claims : 10

(12) PATENT APPLICATION PUBLICATION
(21) Application No.143/DEL/2009 A
(19) INDIA
(22) Date of filing of Application :23/01/2009
(43) Publication Date : 17/07/2015

(54) Title of the invention : PARALLEL ADJUSTING DEVICE FOR SEWING MACHINE FEED

(51) International classification :D05B27/02
(31) Priority Document No :NA
(32) Priority Date :NA
(33) Name of priority country :NA
(86) International Application No :NA
Filing Date :NA
(87) International Publication No :NA
(61) Patent of Addition to Application Number :NA
Filing Date :NA
(62) Divisional to Application Number :NA
Filing Date :NA

(71)**Name of Applicant :**
**1)KAULIN MFG. CO., LTD**
Address of Applicant :11F, NO. 128, SEC. 3, MIN-SHEN E. RD., TAIPEI, TAIWAN (R.O.C) Taiwan
(72)**Name of Inventor :**
**1)LIN, PEI-CHAI**

(57) Abstract :
A parallel adjusting device for a sewing machine feed includes a rear feed gear adjusting mechanism and a front feed gear adjusting mechanism installed parallel to the rear feed gear adjusting mechanism. The feed gear adjusting mechanisms include a bushing, a feed gear push rod passed through the bushing and installed at a position corresponding to a feed gear run-out block, and a feed gear screw rod coupled to the feed gear push rod for driving the feed gear push rod to perform linear movements. With a rotary adjustment of each feed gear screw rod, each feed gear push rod drives each feed gear run-out block for an angular run-out to control the moving path of each feed gear, so as to enhance the convenience and precise fine-tune effect of user operations.

No. of Pages : 24 No. of Claims : 14

(12) PATENT APPLICATION PUBLICATION
(21) Application No.205/DELNP/2011 A
(19) INDIA
(22) Date of filing of Application :11/01/2011
(43) Publication Date : 17/07/2015

(54) Title of the invention : INFLATABLE SPHERICAL COVERING PROTECTION AGAINST SINKING IN WATER AND BURIAL BY AVALANCHE

(51) International classification :B63C 9/125
(31) Priority Document No :08/03266
(32) Priority Date :12/06/2008
(33) Name of priority country :France
(86) International Application No :PCT/FR2008/000909
Filing Date :26/06/2008
(87) International Publication No :NA
(61) Patent of Addition to Application Number :NA
Filing Date :NA
(62) Divisional to Application Number :NA
Filing Date :NA

(71)**Name of Applicant :**
**1)SENE IDRISSA NDIAYE CESAIRE**
Address of Applicant :9, RUE ANDRE BRECHET, ESCALIER 20, 75017 PARIS (FRANCE)
(72)**Name of Inventor :**
**1)SENE IDRISSA NDIAYE CESAIRE**

(57) Abstract :
The invention relates to a portable device (1) consisting of inner cavities (3) that, when inflated, balloon out around the carrier (6), who is tied in by straps and harnesses (7, 8, and 9) . Released by the lever (20) of the mechanism (22) , the fastener (23) , led by a carriage (26) subject to the tensile strength of the springs (27), pulls on the strings (28 and 29) of the percussion caps (10) for the gas bottles (12) . Then, under the tensile strength of a spring (25) , the fastener is raised, releasing the cords, the unfastening of which is facilitated by an abutment strip (30). By the drawback thereof, the two brackets of the axis of the carriage (31) then release the clasps (35) of the straps (34) . The device according to the invention is particularly intended to prevent the sinking of a shipwrecked person in the water and the burial by an avalanche in the mountains

No. of Pages : 18 No. of Claims : 10

(12) PATENT APPLICATION PUBLICATION
(21) Application No.637/DEL/2012 A
(19) INDIA
(22) Date of filing of Application :05/03/2012
(43) Publication Date : 17/07/2015

(54) Title of the invention : ELECTRONIC CIRCUIT FOR SPEED MEASUREMENT OF ELECTRIC MOTORS

(51) International classification :G09D
(31) Priority Document No :NA
(32) Priority Date :NA
(33) Name of priority country :NA
(86) International Application No :NA
Filing Date :NA
(87) International Publication No :NA
(61) Patent of Addition to Application Number :NA
Filing Date :NA
(62) Divisional to Application Number :NA
Filing Date :NA

(71)**Name of Applicant :**
**1)DIRECTOR GENERAL, DEFENCE RESEARCH & DEVELOPMENT ORGANISATION**
Address of Applicant :MINISTRY OF DEFENCE, GOVT OF INDIA, ROOM NO 343, B - WING, DRDO BHAWAN, RAJAJI MARG, NEW DELHI 110105 India
(72)**Name of Inventor :**
**1)BASAM VENKATA RAO**
**2)ASWANI UPPADA**
**3)PERAVALI TRIMURTHULU**
**4)AMITAVA DAS**
**5)SRINIVASA VENKATA RANGA RAJAN**

(57) Abstract :
The invention relates to an electronic circuit for speed measurement of electric motors. The electronic circuit logic to measure duration of each of the input voltage pulses during the 'HIGH' time of the pulse period and calculate a frequency of the pulse voltage during 'LOW time of the pulse period. The electronic circuit logic to reset (discharge) the charged capacitors at appropriate time during the process of frequency to voltage conversion in each period of the pulse waveform, the electronic circuit logic to 'HOLD' the calculated frequency value by appropriate Sample & Hold circuit (S/H) logic. The invention may be used in many applications specifically requiring frequency to voltage conversion during each period of the input pulse waveform.

No. of Pages : 25 No. of Claims : 10

(12) PATENT APPLICATION PUBLICATION
(21) Application No.74/DEL/2015 A
(19) INDIA
(22) Date of filing of Application :08/01/2015
(43) Publication Date : 17/07/2015

(54) Title of the invention : SYSTEMS AND METHODS FOR TREATMENT OF PERFORATOR VEINS FOR VENOUS INSUFFICIENCY

(51) International classification :a61m
(31) Priority Document No :61/925478
(32) Priority Date :09/01/2014
(33) Name of priority country :U.S.A.
(86) International Application No :NA
Filing Date :NA
(87) International Publication No : NA
(61) Patent of Addition to Application Number :NA
Filing Date :NA
(62) Divisional to Application Number :NA
Filing Date :NA

(71)**Name of Applicant :**
**1)COVIDIEN LP**
Address of Applicant :15 Hampshire Street Mansfield, Massachusetts 02048, United States of America
(72)**Name of Inventor :**
**1)MADSEN, Monte**
**2)LICHTY ll, Robert C.**
**3)CHOI, Bruce**

(57) Abstract :
Systems and methods for the treatment of perforator veins for venous insufficiency are described. The systems can include a catheter assembly comprising a proximal hub, a spin lock on the proximal hub, a elongate body overmolded to the proximal hub, and a distal end, the catheter, the elongate body configured to be placed within a perforator vein; an extension tubing having a proximal female hub, a distal male hub, and an elongate body therebetween, the distal male hub having a spin lock thereon, the distal male hub configured to be attached to the proximal hub of the catheter assembly; a syringe filled with a volume of media including cyanoacrylate; and an injector configured to automatically dispense a bolus of the media sufficient to coapt the perforator vein from the syringe upon actuation of a control on the injector. Methods are also disclosed.

No. of Pages : 108 No. of Claims : 24

(12) PATENT APPLICATION PUBLICATION
(21) Application No.3235/DEL/2014 A
(19) INDIA
(22) Date of filing of Application :08/11/2014
(43) Publication Date : 17/07/2015

(54) Title of the invention : METHOD FOR REGULATING THE CONTROL OF AN ELECTRICAL WASTE GATE ACTUATOR BY MEASURING THE CURRENT PASSING THROUGH THE ELECTRICAL ACTUATOR

(51) International classification :f02b
(31) Priority Document No :1362126
(32) Priority Date :05/12/2013
(33) Name of priority country :France
(86) International Application No :NA
Filing Date :NA
(87) International Publication No : NA
(61) Patent of Addition to Application Number :NA
Filing Date :NA
(62) Divisional to Application Number :NA
Filing Date :NA

(71)**Name of Applicant :**
**1)CONTINENTAL AUTOMOTIVE FRANCE**
Address of Applicant :1, Avenue Paul Ourliac - 31100 Toulouse - FRANCE
**2)CONTINENTAL AUTOMOTIVE GmbH**
(72)**Name of Inventor :**
**1)AVIAN, Philippe**
**2)ROCHER, Jacques**
**3)CUVELIER, Laurent**

(57) Abstract :
The object of the present invention is a method for regulating the control of an electrical wastegate actuator controlled by means of an H bridge in order to permit a displacement of the wastegate in the direction of its closure and in the direction of its opening according to whether the current passes through the electrical actuator in one direction or in the opposing direction, the method comprising the following steps: determining a set position (Pc) which the wastegate has to reach, and an activation time of said electrical actuator defining a monitoring time (tp), applying a control signal to the electrical actuator via said H bridge during the monitoring time (tp) to displace the valve into the set position (Pc), measuring the electrical current [i(t)] which passes through the H bridge during the monitoring time (tp) and applying a correction factor (Km) to the electrical current [i(t)] so as to obtain the motor torque (Cm) delivered by the electrical actuator during the monitoring time (tp), obtaining the speed [w(t)] of displacement of the wastegate during the monitoring time (tp) by the integration of the motor torque (Cm), obtaining the position reached (Ptp) by the wastegate at the end of the monitoring time (tp) by the integration of the speed [w(t)], comparing the position reached (Ptp) with the set position(Pc), repeating the method until the set position (Pc) is reached.

No. of Pages : 23 No. of Claims : 4

(12) PATENT APPLICATION PUBLICATION
(21) Application No.7/DEL/2015 A
(19) INDIA
(22) Date of filing of Application :01/01/2015
(43) Publication Date : 17/07/2015

(54) Title of the invention : OPTICAL SENSOR AND ELECTRONIC DEVICE WITH THE SAME

| | |
|---|---|
| (51) International classification | :H01J40/14 |
| (31) Priority Document No | :10-2014-0004879 |
| (32) Priority Date | :15/01/2014 |
| (33) Name of priority country | :Republic of Korea |
| (86) International Application No | :NA |
| Filing Date | :NA |
| (87) International Publication No | : NA |
| (61) Patent of Addition to Application Number | :NA |
| Filing Date | :NA |
| (62) Divisional to Application Number | :NA |
| Filing Date | :NA |

(71)**Name of Applicant :**
**1)SAMSUNG ELECTRONICS CO., LTD.**
Address of Applicant :129, Samsung-ro, Yeongtong-gu, Suwon-si, Gyeonggi-do, 443-742, Republic of Korea.
(72)**Name of Inventor :**
**1)Seong-Je CHO**
**2)Kwang-Bok KIM**
**3)Jae-Geol CHO**
**4)Jae-Hong KIM**
**5)Sun-Tae JUNG**
**6)Chul-Ho CHO**

(57) Abstract :
An optical sensor and an electronic device having an optical sensor. The optical sensor includes: an optical waveguide containing a photochromic material; a light emitter that emits visible light to be incident on the optical waveguide; and a light receiver that detects the visible light emitted from the light emitter 5 itter and progressing through the optical waveguide. A transmittance of the optical waveguide in relation to the visible light may be changed by the photochromic material as the optical waveguide is exposed to UV light. The optical sensor and the electronic device having the same may be variously implemented according to exemplary embodiments.

No. of Pages : 48 No. of Claims : 20

(12) PATENT APPLICATION PUBLICATION
(21) Application No.70/DEL/2014 A
(19) INDIA
(22) Date of filing of Application :09/01/2014
(43) Publication Date : 17/07/2015

(54) Title of the invention : THREAD-CLAMPING DEVICE OF SEWING MACHINE

(51) International classification :D05B
(31) Priority Document No :NA
(32) Priority Date :NA
(33) Name of priority country :NA
(86) International Application No :NA
Filing Date :NA
(87) International Publication No : NA
(61) Patent of Addition to Application Number :NA
Filing Date :NA
(62) Divisional to Application Number :NA
Filing Date :NA

(71)**Name of Applicant :**
**1)Kaulin Mfg. Co., Ltd.**
Address of Applicant :11F., No. 128, Sec. 3, Minsheng E. Rd., Songshan District, Taipei City, Taiwan (R.O.C) Taiwan
(72)**Name of Inventor :**
**1)Pei-Chia LIN**

(57) Abstract :
The Invention The present invention is related to a thread-clamping device for a sewing machine used for clamping a thread and comprising a fixation assembly, a moveable assembly and a thread limiter. The fixation assembly comprises a solenoid valve and a first clamping arm connected to the solenoid valve. The moveable assembly comprises a solenoid core and a second clamping arm connected to the solenoid core; the solenoid core is moveably attached to the solenoid valve. The second clamping arm is configured corresponding to the first clamping arm and a thread-clamping region is formed between the first and second clamping arms. The thread limiter is arranged corresponding to the thread-clamping region to limit the movement range of the thread. Accordingly, the thread can be prevented from slipping out of the thread-clamping region during sewing such that the stability of the sewing is increased.

No. of Pages : 17 No. of Claims : 10

(12) PATENT APPLICATION PUBLICATION
(21) Application No.84/DEL/2015 A
(19) INDIA
(22) Date of filing of Application :10/01/2015
(43) Publication Date : 17/07/2015

(54) Title of the invention : VALVE FOR AEROSOL CONTAINER

| | |
|---|---|
| (51) International classification | :b05b |
| (31) Priority Document No | :10 2014 100 280.6 |
| (32) Priority Date | :13/01/2014 |
| (33) Name of priority country | :Germany |
| (86) International Application No | :NA |
| Filing Date | :NA |
| (87) International Publication No | : NA |
| (61) Patent of Addition to Application Number | :NA |
| Filing Date | :NA |
| (62) Divisional to Application Number | :NA |
| Filing Date | :NA |

(71)**Name of Applicant :**
**1)Thomas GmbH**
Address of Applicant :Industriestrasse 6, 63505 Langenselbold, Germany
(72)**Name of Inventor :**
**1)Kerstin Seling**
**2)Walter Franz**

(57) Abstract :
A valve for an aerosol container has a valve plate adapted to close an axial end of the container, a valve subassembly having at least one dispensing element, a seal ring, and a compression spring, and a valve holder containing the valve subassembly and having an axially open assembly hole through which the valve subassembly can pass. A cover closes the assembly hole and is formed with an axially throughgoing cover hole through which the dispensing element projects and with which the dispensing element forms an annular and axially extending passage. A seal ring surrounds the dispensing element and is engaged between the holder and the cover. A spring biases the dispensing element axially outward against the seal ring and presses an axial outer face of the seal ring against the axially inner face of the cover. Passages extend axially between an interior of the container and the seal ring.

No. of Pages : 30 No. of Claims : 17

(12) PATENT APPLICATION PUBLICATION
(19) INDIA
(22) Date of filing of Application :10/05/2012
(21) Application No.1450/DEL/2012 A
(43) Publication Date : 17/07/2015

(54) Title of the invention : AN AEROSTAT AND A FEEDTUBE TETHER THEREFORE •

(51) International classification :G01N
(31) Priority Document No :NA
(32) Priority Date :NA
(33) Name of priority country :NA
(86) International Application No :NA
Filing Date :NA
(87) International Publication No : NA
(61) Patent of Addition to Application Number :NA
Filing Date :NA
(62) Divisional to Application Number :NA
Filing Date :NA

(71)**Name of Applicant :**
**1)DIRECTOR GENERAL DEFENCE RESEARCH & DEVELOPMENT ORGANISATION**
Address of Applicant :Ministry of Defence Govt of India Room No 348 B-Wing DRDO Bhawan Rajaji Marg New Delhi 110105 India
(72)**Name of Inventor :**
**1)P. BALASUBRAMANIAN**
**2)A. PAL**
**3)S.C. SATI**

(57) Abstract :
The present invention relates to a feedtube tether assembly comprising an outer jacket a plurality of lightening conductors multitude of strengthening members mylar tape a plurality of electrical conductors or wires a plurality of optical fibers and a helium feedtube. The helium feedtube is embedded within the tether and is bifurcated into multiple paths for increasing/enhancing the endurance of an aerostat. Also the present invention relates to an aerostat having the feedtube tether assembly.

No. of Pages : 27 No. of Claims : 14

(12) PATENT APPLICATION PUBLICATION
(19) INDIA
(22) Date of filing of Application :01/03/2012
(21) Application No.1863/DELNP/2012 A
(43) Publication Date : 17/07/2015

(54) Title of the invention : COMPOSITION FOR LOWERING BLOOD URIC ACID LEVEL

(51) International classification :A61K 31/185
(31) Priority Document No :2009-215092
(32) Priority Date :17/09/2009
(33) Name of priority country :Japan
(86) International Application No :PCT/JP2010/065627
Filing Date :10/09/2010
(87) International Publication No :WO 2011/034006
(61) Patent of Addition to Application Number :NA
Filing Date :NA
(62) Divisional to Application Number :NA
Filing Date :NA

(71)**Name of Applicant :**
**1)TAISHO PHARMACEUTICAL CO., LTD.**
Address of Applicant :24-1, TAKADA 3-CHOME, TOSHIMA-KU, TOKYO 170-8633 JAPAN.
(72)**Name of Inventor :**
**1)KIMURA FUMINORI**
**2)KITAJIMA HIDEAKI**
**3)TANAKA TAKAO**
**4)NISHIKAWA TORU**

(57) Abstract :
A composition for lowering a blood uric acid level is characterized by comprising taurine as an active ingredient.

No. of Pages : 34 No. of Claims : 3

(12) PATENT APPLICATION PUBLICATION
(21) Application No.1865/DEL/2012 A
(19) INDIA
(22) Date of filing of Application :18/06/2012
(43) Publication Date : 17/07/2015

(54) Title of the invention : ELASTOMER NANOCOMPOSITE FOR HEAVY DYNAMIC LOAD BEARING RUBBER TO METAL BONDED BUSHES

(51) International classification :C08F
(31) Priority Document No :NA
(32) Priority Date :NA
(33) Name of priority country :NA
(86) International Application No :NA
Filing Date :NA
(87) International Publication No : NA
(61) Patent of Addition to Application Number :NA
Filing Date :NA
(62) Divisional to Application Number :NA
Filing Date :NA

(71)**Name of Applicant :**
**1)DIRECTOR GENERAL, DEFENCE RESEARCH & DEVELOPMENT ORGANISATION**
Address of Applicant :MINISTRY OF DEFENCE, GOVT OF INDIA, ROOM NO 348, B-WING, DRDO BHAWAN, RAJAJI MARG, NEW DELHI 110 011 India
(72)**Name of Inventor :**
**1)DEBDATTA RATNA**
**2)PRAVEEN SREENIVASAN**
**3)PRADEESH ALBERT**
**4)ROHIDAS DASHARATH RAUT**
**5)JAYENDRAN SOMASEKHARAN NAIR**
**6)BIKASH CHANDRA CHAKRABORTY**
**7)JANARDHANAN PILLAI NARAYANA DAS**

(57) Abstract :
The present invention relates to elastomer nanocomposite for heavy dynamic load bearing rubber to metal bonded bushes. More particularly it relates to novel high performance layered silicate (nanoclay) reinforced elastomeric nanocomposite composition characterized by excellent wear and abrasion resistance, thermo mechanical stability, enhanced high temperature tear strength and stiffness, superior rubber to metal bond strength with excellent dynamic endurance properties.

No. of Pages : 28 No. of Claims : 8

(12) PATENT APPLICATION PUBLICATION
(21) Application No.869/DEL/2012 A
(19) INDIA
(22) Date of filing of Application :24/03/2012
(43) Publication Date : 17/07/2015

(54) Title of the invention : ADAPTIVE HELICAL MIRROR FOR OPTICAL VORTEX GENERATION •

(51) International classification :G01B
(31) Priority Document No :NA
(32) Priority Date :NA
(33) Name of priority country :NA
(86) International Application No :NA
Filing Date :NA
(87) International Publication No : NA
(61) Patent of Addition to Application Number :NA
Filing Date :NA
(62) Divisional to Application Number :NA
Filing Date :NA

(71)**Name of Applicant :**
**1)DIRECTOR GENERAL DEFENCE RESEARCH & DEVELOPMENT ORGANISATION**
Address of Applicant :Ministry of Defence Govt. of India Room No 348 B-Wing DRDO Bhawan Rajaji Marg New Delhi 110105 India
(72)**Name of Inventor :**
**1)Devinder Pal Ghai**
**2)Anil Kumar Maini**

(57) Abstract :
This invention relates to an adaptive helical mirror (AHM) that can be used to generate an optical vortex of desired topological charge. The device uses a thin flat mirror with a narrow hole at the centre and a radial cut. The mirror is driven with a novel piezoelectric tubular actuator. The shape of electrodes on the inner and outer side of the piezoelectric tube is such that, on actuation, the tube undergoes azimuthally varying expansion, thereby transforming the thin flat mirror into the shape of a single turn helix. An optical plane wave after reflection from such a mirror would acquire helical shape, thereby generating an optical vortex. By varying the excitation voltage, helicity of the optical wave front can be altered, both in magnitude and sign. The AHM can be used as one of the resonator mirrors in a laser cavity, thereby enabling the generation of a vortex beam without the insertion of a phase element or a non-linear device inside the laser cavity. The real time control on the topological charge by the AHM makes it attractive from the point of view of adaptive optics, quantum computing, optical switching and communication.

No. of Pages : 22 No. of Claims : 11

(12) PATENT APPLICATION PUBLICATION
(21) Application No.89/DEL/2015 A
(19) INDIA
(22) Date of filing of Application :12/01/2015
(43) Publication Date : 17/07/2015

(54) Title of the invention : RIVET FOR BLIND FASTENERS, ASSOCIATED SETTING TOOL AND METHOD FOR SETTING SUCH A RIVET

(51) International classification :b21j
(31) Priority Document No :14 50281
(32) Priority Date :14/01/2014
(33) Name of priority country :France
(86) International Application No :NA
Filing Date :NA
(87) International Publication No : NA
(61) Patent of Addition to Application Number :NA
Filing Date :NA
(62) Divisional to Application Number :NA
Filing Date :NA

(71)**Name of Applicant :**
**1)LISI AEROSPACE**
Address of Applicant :46/50 Quai De La Rapee, 75012 Paris, France,
(72)**Name of Inventor :**
**1)FREDERIC BIGOT**
**2)OLIVIER GAY**
**3)JEROME COUDERC**
**4)GUY PAILHORIES**

(57) Abstract :
The invention concerns a rivet for blind fastening, comprising a screw with a handling element, a break groove, a head separated from the handling element by the break groove, and a threaded part; a sleeve with a collar and a tubular shank comprising an internal thread intended to come into engagement with the threaded part of the screw. The handling element comprises a first handling portion able to guide the introduction of the rivet in a setting tool, and a second handling portion able to transmit a torque, the two handling portions being separated by blocking portion able to limit an axial movement of the rivet in a setting tool. The invention also concerns a setting nose for installing such a rivet, and a setting method. The invention is in particular applicable to the assembly of aircraft structures.

No. of Pages : 29 No. of Claims : 15

(12) PATENT APPLICATION PUBLICATION
(21) Application No.2686/DEL/2011 A
(19) INDIA
(22) Date of filing of Application :16/09/2011
(43) Publication Date : 17/07/2015

(54) Title of the invention : PEELABLE COATING FOR TEMPORARY PROTECTION OF METAL STRUCTURES AGAINST MARINE CORROSION

(51) International classification :H01J
(31) Priority Document No :NA
(32) Priority Date :NA
(33) Name of priority country :NA
(86) International Application No :NA
Filing Date :NA
(87) International Publication No :NA
(61) Patent of Addition to Application Number :NA
Filing Date :NA
(62) Divisional to Application Number :NA
Filing Date :NA

(71)**Name of Applicant :**
**1)DIRECTOR GENERAL, DEFENCE RESEARCH & DEVELOPMENT ORGANISATION**
Address of Applicant :MINISTRY OF DEFENCE, GOVT OF INDIA, ROOM NO. 348, B-WING, DRDO BHAWAN, RAJAJI MARG, NEW DELHI 110 011 India
(72)**Name of Inventor :**
**1)CHILAMALA SURYANARAYANA**
**2)SUSHIL SHANTARAM PAWAR**
**3)RUPESH SAGUN NAIL**
**4)AMIT MANOHAR RATNAKAR**
**5)PHILLIP VICTOR RODRIGUES**

(57) Abstract :
This invention relates to peelable protective coating compositions, and, more specifically, to anticorrosive peelable polymeric coating compositions which forms a protective and/or decorative coating on a variety of substrates, including marine structures, ships, automotive paints more specifically on metals. The film protects the metallic structures from corrosion especially marine corrosion and can be removed by peeling with hand.

No. of Pages : 29 No. of Claims : 27

(12) PATENT APPLICATION PUBLICATION
(19) INDIA
(22) Date of filing of Application :07/11/2014
(21) Application No.9351/DELNP/2014 A
(43) Publication Date : 17/07/2015

(54) Title of the invention : FILOVIRUS CONSENSUS ANTIGENS NUCLEIC ACID CONSTRUCTS AND VACCINES MADE THEREFROM AND METHODS OF USING SAME

(51) International classification :A61K39/12
(31) Priority Document No :61/623428
(32) Priority Date :12/04/2012
(33) Name of priority country :U.S.A.
(86) International Application No :PCT/US2013/036413
Filing Date :12/04/2013
(87) International Publication No :WO 2013/155441
(61) Patent of Addition to Application Number :NA
Filing Date :NA
(62) Divisional to Application Number :NA
Filing Date :NA

(71)**Name of Applicant :**
**1)THE TRUSTEES OF THE UNIVERSITY OF PENNSYLVANIA**
Address of Applicant :3160 Chestnut Street Suite 200 Philadelphia Pennsylvania 19104 U.S.A.
(72)**Name of Inventor :**
**1)WEINER David B**
**2)SHEDLOCK Devon**

(57) Abstract :
Nucleic acid molecules and compositions comprising one or more nucleic acid sequences that encode a consensus filovirus immunogen including a consensus Marburgvirus filovirus glycoprotein MARV GP immunogen a consensus Ebolavirus Sudan filovirus glycoprotein SEBOV GP immunogen and a consensus Ebolavirus Zaire glycoprotein ZEBOV GP immunogen are disclosed. The coding sequences optionally include operable linked coding sequence that encode a signal peptide. Immunomodulatory methods and methods of inducing an immune response against filovirus particularly Marburgvirus Ebolavirus Sudan and Ebolavirus Zaire are disclosed. Method of preventing filovirus infection particularly infection by Marburgvirus Ebolavirus Sudan and Ebolavirus Zaire and methods of treating individuals infected with filovirus infection particularly infection by Marburgvirus Ebolavirus Sudan and Ebolavirus Zaire are disclosed. Consensus filovirus proteins are disclosed.

No. of Pages : 163 No. of Claims : 41

(12) PATENT APPLICATION PUBLICATION
(19) INDIA
(22) Date of filing of Application :07/11/2014
(21) Application No.9352/DELNP/2014 A
(43) Publication Date : 17/07/2015

(54) Title of the invention : N -ARYLTRIAZOLE COMPOUNDS AS LPAR ANTAGONISTS

(51) International classification :C07D249/06,C07D249/14,A61K31/4192
(31) Priority Document No :61/661953
(32) Priority Date :20/06/2012
(33) Name of priority country :U.S.A.
(86) International Application No :PCT/EP2013/062463
Filing Date :17/06/2013
(87) International Publication No :WO 2013/189865
(61) Patent of Addition to Application Number :NA
Filing Date :NA
(62) Divisional to Application Number :NA
Filing Date :NA

(71)**Name of Applicant :**
**1)F. HOFFMANN LA ROCHE AG**
Address of Applicant :Grenzacherstrasse 124, CH-4070 Basel Switzerland
(72)**Name of Inventor :**
**1)GABRIEL, Stephen Deems**
**2)HAMILTON, Matthew Michael**
**3)QIAN, Yimin**
**4)SIDDURI, Achyutharao**

(57) Abstract :
Provided herein are compounds of the formula (I): as well as pharmaceutically acceptable salts thereof wherein the substituents are as those disclosed in the specification. These compounds and the pharmaceutical compositions containing them are useful for the treatment of inflammatory diseases and disorders such as for example pulmonary fibrosis.

No. of Pages : 106 No. of Claims : 34

(12) PATENT APPLICATION PUBLICATION
(19) INDIA
(22) Date of filing of Application :07/11/2014
(21) Application No.9354/DELNP/2014 A
(43) Publication Date : 17/07/2015

(54) Title of the invention : A FORCED REVERSAL COMBUSTION CHAMBER

(51) International classification :F23R3/02
(31) Priority Document No :201410121259.1
(32) Priority Date :28/03/2014
(33) Name of priority country :China
(86) International Application No :NA
Filing Date :NA
(87) International Publication No : NA
(61) Patent of Addition to Application Number :NA
Filing Date :NA
(62) Divisional to Application Number :NA
Filing Date :NA

(71)**Name of Applicant :**
**1)LI Yanxin**
Address of Applicant :Room A 1603, Boya International Center, No.1, Wangjing Lizezhongyi Road, Chaoyang district, Beijing 100102, China
(72)**Name of Inventor :**
**1)LI Yanxin**

(57) Abstract :
Burners, such as .all kinds of fuel oil, gas and powdered coal, have combustion chambers for stabilizing combustion and air distribution. The invention discloses a forced reversal combustion chamber, which comprises a combustion chamber body, configured as a hollow cavity which ,is similar to a arcing shape formed by folding fingers towards palm and symmetrically configured around center of palm; a plurality of swirl vanes for delivering combustion air into the combustion. chamber, correspondingly provided on interior side of flame outlet end of the combustion chamber; in the middle of inner end of the combustion chamber, a fuel nozzle is provided, which inserts into interior wall of the combustion chamber and outlet of which extends through the interior wall of the combustion chamber; outlet end of the combustion chamber alter mixing air and fuel: is flame outlet. The forced reversal combustion chamber of the invention could overcome defects in the prior art, such as bad flame stabilization, low, bum-off rate of fuel and poor environmental protection . property, and achieve advantages of good flame stabilization, high bum-off rate of fuel and good environmental protection property.

No. of Pages : 11 No. of Claims : 4

(12) PATENT APPLICATION PUBLICATION
(19) INDIA
(22) Date of filing of Application :26/06/2008
(21) Application No.1536/DEL/2008 A
(43) Publication Date : 17/07/2015

(54) Title of the invention : FORMULATIONS AND METHODS THEREOF FOR MAKING RADIOLABELED DRY POWDER INHALATION PREPARATION CONTAINING MICRONIZED SALBUTAMOL OR SALBUTAMOL SULPHATE

| | |
|---|---|
| (51) International classification | :A61K9/00, A61K9/14 |
| (31) Priority Document No | :NA |
| (32) Priority Date | :NA |
| (33) Name of priority country | :NA |
| (86) International Application No | :NA |
| Filing Date | :NA |
| (87) International Publication No | :NA |
| (61) Patent of Addition to Application Number | :NA |
| Filing Date | :NA |
| (62) Divisional to Application Number | :NA |
| Filing Date | :NA |

(71)**Name of Applicant :**
**1)DIRECTOR GENERAL, DEFENCE RESEARCH & DEVELOPMENT ORGANISATION**
Address of Applicant :MINISTRY OF DEFENCE, GOVT OF INDIA, WEST BLOCK-VII, WING 1 SEC-1 R K PURAM, NEW DELHI-110 066 India
(72)**Name of Inventor :**
**1)GAURAV MITTAL**
**2)THAKURI SINGH**
**3)NARESH CHANDER GOOMER**
**4)ASEEM BHATNAGAR**
**5)AMAR LULLA**
**6)GEENA MALHOTRA**
**7)RAVI KASHYAP**
**8)RAJENDRA PRASHAD TRIPATHI**

(57) Abstract :
The invention discloses a more stable scinigraphic agent a process for radiolabeled scintigraphic imaging agent wherein the labeling is through chemical chelation. It also discloses a formulation containing the said more efficacious imaging agent as therapeutically active substance.

No. of Pages : 17 No. of Claims : 13

(12) PATENT APPLICATION PUBLICATION
(21) Application No.1882/DELNP/2012 A
(19) INDIA
(22) Date of filing of Application :01/03/2012
(43) Publication Date : 17/07/2015

(54) Title of the invention : CONTAINER STORAGE AND RETRIEVAL SYSTEM AND METHOD

(51) International classification :B65G 1/137
(31) Priority Document No :2009904222
(32) Priority Date :04/09/2009
(33) Name of priority country :Australia
(86) International Application No :PCT/NZ2010/000175
Filing Date :03/09/2010
(87) International Publication No :WO 2011/028136
(61) Patent of Addition to Application Number :NA
Filing Date :NA
(62) Divisional to Application Number :NA
Filing Date :NA

(71)**Name of Applicant :**
**1)SODIUM LIMITED**
Address of Applicant :C/-THE OFFICE OF FRASER POWRIE, SOLICITOR, 5 FENTON STREET, EDEN TERRACE, AUCKLAND 1024, NEW ZEALAND.
(72)**Name of Inventor :**
**1)BAKER, JOHN RUSSELL**

(57) Abstract :
A system for storing and retrieving containers (108) comprises a first conveying means (1) operable to move stacks of containers between a loading position (2) and a discharge position (4), a container store (5), a container store dispatch conveyor (28) and a container store delivery conveyor (26). A first transfer means transfers containers from the container store dispatch conveyor (28) to the first conveying means (1) and a second transfer means transfers containers from the first conveying means (1) to the container store delivery conveyor (26). A container store storage/retrieval means (9) moves containers from the container store (5) to the container store dispatch conveyor (28) and from the container store delivery conveyor (26) to the container store (5). The system has stack destacking means (30) which are capable of destacking full stacks into at least two partial stacks, the stack destacking means positioned to allow containers which have passed through the destacking means to be delivered to the container store (5) by the container store delivery conveyor (26).

No. of Pages : 47 No. of Claims : 50

(12) PATENT APPLICATION PUBLICATION
(19) INDIA
(22) Date of filing of Application :25/04/2012
(21) Application No.3648/DELNP/2012 A
(43) Publication Date : 17/07/2015

(54) Title of the invention : SUB SEA GREASE SYSTEM AND METHOD OF OPERATING SAID SYSTEMS

(51) International classification :E21B 33/068
(31) Priority Document No :61/255051
(32) Priority Date :26/10/2009
(33) Name of priority country :U.S.A.
(86) International Application No :PCT/US2010/027468
Filing Date :16/03/2010
(87) International Publication No :WO 2011/053370
(61) Patent of Addition to Application Number :NA
Filing Date :NA
(62) Divisional to Application Number :NA
Filing Date :NA

(71)**Name of Applicant :**
**1)NEIL CRAWFORD**
Address of Applicant :3000 RESEARCH FOREST, SUITE 220, THE WOODLANDS, TEXAS 77381, USA
(72)**Name of Inventor :**
**1)NEIL CRAWFORD**

(57) Abstract :
The present invention is a method and system for supplying grease to maintain a sealed well during deployment of line, in particular braided electrical wire. The subsea grease cartridge system (100) includes a subsea assembly (102); first and second grease containers (104 and 106) filled with grease; a pump (108); a switch (110); and a restoring device (128) to replenish grease containers. The method of operating the grease cartridge system (100) includes: attaching first and second grease containers (104 and 106) to the subsea assembly (102); applying hydraulic pressure to the first grease container (104); pumping the grease of the first grease container (104) to a grease head; switching hydraulic pressure from the first grease container (104) to the second grease container (106) instantaneously when the first grease container (104) becomes unable to supply grease properly; and pumping the grease of the second grease container (106) to the grease head. The method includes replenishing containers from cartridges and switching back and forth between the filled grease containers.

No. of Pages : 35 No. of Claims : 27

(12) PATENT APPLICATION PUBLICATION
(19) INDIA
(22) Date of filing of Application :21/03/2012
(21) Application No.822/DEL/2012 A
(43) Publication Date : 17/07/2015

(54) Title of the invention : HIGH STRENGTH STEEL FOR NAVAL APPLICATIONS

(51) International classification :B22C
(31) Priority Document No :NA
(32) Priority Date :NA
(33) Name of priority country :NA
(86) International Application No :NA
Filing Date :NA
(87) International Publication No :NA
(61) Patent of Addition to Application Number :NA
Filing Date :NA
(62) Divisional to Application Number :NA
Filing Date :NA

(71)**Name of Applicant :**
**1)DIRECTOR GENERAL, DEFENCE RESEARCH & DEVELOPMENT ORGANIZATION**
Address of Applicant :MINISTRY OF DEFENCE, GOVT OF INDIA, ROOM NO 348, B - WING, DRDO BHAWAN, RAJAJI MARG, NEW DELHI 110 011 India
(72)**Name of Inventor :**
**1)KUTTANELLORE MURALEEDHARAN**
**2)RAMALINGAM BALAMURALIKRISHNAN**
**3)SETTIVARI NAGARJUNA**
**4)NIRMALYA RARHI**
**5)ROWTHU VEERABABU**
**6)BANDARUPALLI GOPALAKRISHNA**
**7)HILLOL KUMAR NANDI**

(57) Abstract :
The present invention relates to high strength steel alloy composition developing yield strengths in the range of 700 to 1000MPa and has impact toughness 80 to 100J at low temperatures -20 to -40°C. This high strength steel alloy composition is developed more particularly for naval structures such as hull and other structural applications.

No. of Pages : 19 No. of Claims : 8

(12) PATENT APPLICATION PUBLICATION
(19) INDIA
(22) Date of filing of Application :07/11/2014
(21) Application No.9370/DELNP/2014 A
(43) Publication Date : 17/07/2015

(54) Title of the invention : PROCESS FOR PREPARING INHIBITED NON PREGELATINIZED GRANULAR STARCHES

(51) International classification :C08B30/12
(31) Priority Document No :61/647146
(32) Priority Date :15/05/2012
(33) Name of priority country :U.S.A.
(86) International Application No :PCT/US2013/040311
Filing Date :09/05/2013
(87) International Publication No :WO 2013/173161
(61) Patent of Addition to Application Number :NA
Filing Date :NA
(62) Divisional to Application Number :NA
Filing Date :NA

(71)**Name of Applicant :**
**1)TATE & LYLE INGREDIENTS AMERICAS LLC**
Address of Applicant :5450 Prairie Stone Parkway, Hoffman Estates IL 60192 U.S.A.
(72)**Name of Inventor :**
**1)HAN, Xian- Zhong**
**2)HUTTON, Thomas, K.**

(57) Abstract :
An inhibited non- pregelatinized granular starch suitable for use as a food ingredient in substitution for a chemically modified starch may be prepared by heating non -pregelatinized granular starch in an alcoholic medium in the presence of a base and/or a salt. Steam treatment may be used to enhance the extent of inhibition.

No. of Pages : 64 No. of Claims : 55

(12) PATENT APPLICATION PUBLICATION
(21) Application No.1493/DEL/2012 A
(19) INDIA
(22) Date of filing of Application :15/05/2012
(43) Publication Date : 17/07/2015

(54) Title of the invention : AN ALOE VERA BASED COMPOSITION AND A PROCESS FOR PREPARATION THEREOF

| | | |
|---|---|---|
| (51) International classification | :A61K | |
| (31) Priority Document No | :NA | |
| (32) Priority Date | :NA | |
| (33) Name of priority country | :NA | |
| (86) International Application No | :NA | |
| Filing Date | :NA | |
| (87) International Publication No | :NA | |
| (61) Patent of Addition to Application Number | :NA | |
| Filing Date | :NA | |
| (62) Divisional to Application Number | :NA | |
| Filing Date | :NA | |

(71)**Name of Applicant :**
**1)DIRECTOR GENERAL, DEFENCE RESEARCH & DEVELOPMENT ORGANIZATION**
Address of Applicant :MINISTRY OF DEFENCE, GOVT OF INDIA, ROOM NO 348, B-WING, DRDO BHAWAN, RAJAJI MARG, NEW DELHI - 110105 India
(72)**Name of Inventor :**
**1)KANDANGATH RAGHAVAN ANILAKUMAR**
**2)VIJAYAN SARITHA**
**3)FARHATH KHANUM**
**4)AMARINDER SINGH BAWA**

(57) Abstract :
The present invention provides an Aloe vera based fruit spread composition comprising Aloe vera gel, fruit pulp and partially purified extract of Aloe vera in specific proportions along with sugar and pectin. Said composition is shelf stable, cost effective and exhibits anti-ulcer activity.

No. of Pages : 14 No. of Claims : 4

(12) PATENT APPLICATION PUBLICATION
(21) Application No.3241/DEL/2014 A
(19) INDIA
(22) Date of filing of Application :10/11/2014
(43) Publication Date : 17/07/2015

(54) Title of the invention : COMPACTING DEVICE ON A SPINNING MACHINE

(51) International classification :d01h
(31) Priority Document No :10 2013 112 345.7
(32) Priority Date :11/11/2013
(33) Name of priority country :Germany
(86) International Application No :NA
Filing Date :NA
(87) International Publication No : NA
(61) Patent of Addition to Application Number :NA
Filing Date :NA
(62) Divisional to Application Number :NA
Filing Date :NA

(71)**Name of Applicant :**
**1)Maschinenfabrik Rieter AG**
Address of Applicant :Klosterstrasse 20, 8406 Winterthur, Switzerland
(72)**Name of Inventor :**
**1)Peter Blankenhorn**
**2)Wolfgang Lehner**
**3)Michael M¼ller**

(57) Abstract :
The invention relates to a compacting device (2) on a spinning machine for compacting a fiber strand in a compacting zone downstream of a discharge roller pair of a drafting system and comprising a circulating air-permeable transport belt (5) transporting the fiber strand through the compacting zone. A suction tube (3) guiding the transport belt (5) along a segment of the circulating path thereof and having a suction slit disposed in the suction tube (3) and having a deflecting guide (4) guiding the transport belt (5) spaced apart from the suction tube (3) are associated with the compacting zone. A spacer (10) is disposed between the suction tube (3) and the deflecting guide - (4) and comprises a first spacing surface (12) by means of which the deflecting guide (4) is held at a distance from the suction tube-(3) at which the transport belt (5) is tightened. The spacer (10) is displaceably mounted between the suction tube (3) and the deflecting guide (4) in order to be able to disengage the first spacing surface (12) and to be able to modify the spacing between the suction tube (3) and the deflecting guide (4). A spacer of a compacting device (2) comprises at least one first, and preferably also one second spacing surface (12, 13) and one sliding device (11, 21).

No. of Pages : 17 No. of Claims : 15

(12) PATENT APPLICATION PUBLICATION
(19) INDIA
(22) Date of filing of Application :07/11/2014
(21) Application No.9377/DELNP/2014 A
(43) Publication Date : 17/07/2015

(54) Title of the invention : SPRAY EJECTOR MECHANISMS AND DEVICES PROVIDING CHARGE ISOLATION AND CONTROLLABLE DROPLET CHARGE AND LOW DOSAGE VOLUME OPTHALMIC ADMINISTRATION

(51) International classification :B05B1/02
(31) Priority Document No :61/622148
(32) Priority Date :10/04/2012
(33) Name of priority country :U.S.A.
(86) International Application No :PCT/US2013/036002
Filing Date :10/04/2013
(87) International Publication No :WO 2013/155201
(61) Patent of Addition to Application Number :NA
Filing Date :NA
(62) Divisional to Application Number :NA
Filing Date :NA

(71)**Name of Applicant :**
**1)CORINTHIAN OPHTHALMIC INC.**
Address of Applicant :148 Hwy 105 Extension Suite 103, Boone, North Carolina 28607 U.S.A.
(72)**Name of Inventor :**
**1)HUNTER, Charles Eric**
**2)BROWN, Joshua Richard**
**3)BALLOU, Bernard L. Jr.**
**4)WILKERSON, Jonathan Ryan**
**5)LYNCH, Iyam**
**6)WILKENS, Lucien S.**
**7)LAM, Peter**
**8)HAMILTON, Coleman**
**9)CLEMENTS, J. Sid**

(57) Abstract :
The present disclosure relates to ejector mechanisms and devices for generating a directed stream of droplets, as well as improved methods for delivering an ejected stream of droplets to a target. The device and methods may be useful for the delivery of fluid for ophthalmic, topical, oral, nasal, or pulmonary use, more particularly ,for use in the delivery of ophthalmic fluid to the eye. Certain aspects of the disclosure relate to devices and methods for the delivery of a therapeutically effective low dosage volume medicament composition to a target e.g. by controlling charge droplet size and/or droplet deposit parameters of the medicament composition.

No. of Pages : 106 No. of Claims : 34

(12) PATENT APPLICATION PUBLICATION
(21) Application No.9378/DELNP/2014 A
(19) INDIA
(22) Date of filing of Application :07/11/2014
(43) Publication Date : 17/07/2015

(54) Title of the invention : METHOD AND SYSTEM TO HANDLE MANUAL BOLUSES OR MEAL EVENTS IN CLOSED LOOP CONTROLLERS

(51) International classification :A61M5/14
(31) Priority Document No :13/539056
(32) Priority Date :29/06/2012
(33) Name of priority country :U.S.A.
(86) International Application No :PCT/US2013/046260
Filing Date :18/06/2013
(87) International Publication No :WO 2014/004159
(61) Patent of Addition to Application Number :NA
Filing Date :NA
(62) Divisional to Application Number :NA
Filing Date :NA

(71)**Name of Applicant :**
**1)ANIMAS CORPORATION**
Address of Applicant :200 Lawrence Drive, West Chester, Pennsylvania 19380 U.S.A.
(72)**Name of Inventor :**
**1)FINAN, Daniel**

(57) Abstract :
Described and illustrated is a diabetes management system that includes an infusion pump, glucose sensor and controller with a method programmed into the controller. The infusion pump is configured to deliver insulin to a subject. The glucose sensor is configured to sense glucose levels in the subject and provide output signals representative of the glucose levels in the subject. The controller is programmed receives signals from at least one of the glucose sensor and the pump and configured to issue signals to the pump to deliver an amount of insulin determined by a feedback controller that utilizes a model predictive control of the subject.

No. of Pages : 24 No. of Claims : 10

(12) PATENT APPLICATION PUBLICATION
(21) Application No.3218/DEL/2014 A
(19) INDIA
(22) Date of filing of Application :07/11/2014
(43) Publication Date : 17/07/2015

(54) Title of the invention : MAGNETIC CONTACTOR

| | |
|---|---|
| (51) International classification | :h01h |
| (31) Priority Document No | :10-2013-0135789 |
| (32) Priority Date | :08/11/2013 |
| (33) Name of priority country | :Republic of Korea |
| (86) International Application No | :NA |
| Filing Date | :NA |
| (87) International Publication No | : NA |
| (61) Patent of Addition to Application Number | :NA |
| Filing Date | :NA |
| (62) Divisional to Application Number | :NA |
| Filing Date | :NA |

(71)**Name of Applicant :**
**1)LSIS CO., LTD.**
Address of Applicant :127, LS-ro, Dongan-gu, Anyang-si, Gyeonggi-do 431-848, Republic of Korea
(72)**Name of Inventor :**
**1)Hyun Il JANG**

(57) Abstract :
Disclosed is a magnetic contactor. A free space in which a DC converting circuit is provided is in a product can be secured by changing shapes of the movable core and the fixed core, and thus, in association with a low-capacity product, external AC power may be converted into DC power even without enlarging a size of a product. Also, a normal position member may be included in a movable core, and may induce the movable core to the original position, and thus, a mechanical mechanism relationship between the switch manipulating part included in the movable core and the other element is maintained.

No. of Pages : 41 No. of Claims : 14

(12) PATENT APPLICATION PUBLICATION
(19) INDIA
(22) Date of filing of Application :07/11/2014
(21) Application No.9364/DELNP/2014 A
(43) Publication Date : 17/07/2015

(54) Title of the invention : HYBRID VEHICLE DRIVE IDLE REDUCTION SYSTEM AND METHOD

(51) International classification :B60W20/00,B60W10/08,B60W10/04
(31) Priority Document No :61/624118
(32) Priority Date :13/04/2012
(33) Name of priority country :U.S.A.
(86) International Application No :PCT/US2013/036431
Filing Date :12/04/2013
(87) International Publication No :WO 2013/155451
(61) Patent of Addition to Application Number :NA
Filing Date :NA
(62) Divisional to Application Number :NA
Filing Date :NA

(71)**Name of Applicant :**
**1)DALUM, Joseph T.**
Address of Applicant :N4 W22610 Bluemound Rd. Waukesha, WI 53186 U.S.A.
(72)**Name of Inventor :**
**1)DALUM, Joseph T.**

(57) Abstract :
A vehicle drive system for a vehicle includes a first prime mover a first prime mover driven transmission, and a rechargeable power source. The vehicle drive system includes an electric motor and direct or indirect mechanical communication with the first prime mover. Wherein the electric motor can receive power from the first prime mover driven transmission and can receive power from the first prime mover. The vehicle drive system also includes a control system that causes the electric motor to rotate the first prime mover at a speed higher than an idle set point of the first prime mover while the vehicle is stopped thereby reducing fuel consumption at idle per the vehicle.

No. of Pages : 50 No. of Claims : 15

(12) PATENT APPLICATION PUBLICATION
(19) INDIA
(22) Date of filing of Application :07/11/2014
(21) Application No.9365/DELNP/2014 A
(43) Publication Date : 17/07/2015

(54) Title of the invention : SELF REGULATING GAS GENERATOR AND METHOD

(51) International classification :B01J19/18,B01J23/40,B01J7/02
(31) Priority Document No :13/464881
(32) Priority Date :04/05/2012
(33) Name of priority country :U.S.A.
(86) International Application No:PCT/US2013/039521
Filing Date :03/05/2013
(87) International Publication No :WO 2013/166424
(61) Patent of Addition to Application Number :NA
Filing Date :NA
(62) Divisional to Application Number :NA
Filing Date :NA

(71)**Name of Applicant :**
**1)ENCITE LLC**
Address of Applicant :41 Second Avenue, Burlington, MA 01803 U.S.A.
(72)**Name of Inventor :**
**1)MARSH, Stephen A.**
**2)PARKER, Donald, M.**
**3)PINTAURO, Peter, N.**

(57) Abstract :
A self-regulating gas generator that, in response to gas demand supplies and automatically adjusts the amount of gas (e.g. hydrogen or oxygen) catalytically generated in a chemical supply chamber from an appropriate chemical supply such as a chemical solution, gas dissolved in liquid, or mixture. In some embodiments, the gas generator may employ a piston, rotating rod, or other element(s) to expose the chemical supply to the catalyst in controlled amounts. In another embodiment, the self- regulating gas generator uses bang-bang control, with the element(s) exposing a catalyst, contained within the chemical supply chamber, to the chemical supply in ON and OFF states according to a self-adjusting duty cycle, thereby generating and outputting the gas in an orientation- independent manner. The gas generator may be used to provide gas for various gas consuming devices, such as a fuel cell, torch, or oxygen respiratory devices.

No. of Pages : 64 No. of Claims : 26

(12) PATENT APPLICATION PUBLICATION
(19) INDIA
(22) Date of filing of Application :07/11/2014
(21) Application No.9366/DELNP/2014 A
(43) Publication Date : 17/07/2015

(54) Title of the invention : ELASTOMER PRECURSOR COMPRISING THERMOPLASTIC VULCANIZATE OR RUBBER PARTICLES INCORPORATED INTO A THERMOPLASTIC POLYMER IN A RUBBER MATRIX

(51) International classification :C08J3/24
(31) Priority Document No :61/624447
(32) Priority Date :16/04/2012
(33) Name of priority country :U.S.A.
(86) International Application No :PCT/IL2013/050323
Filing Date :14/04/2013
(87) International Publication No :WO 2013/156996
(61) Patent of Addition to Application Number :NA
Filing Date :NA
(62) Divisional to Application Number :NA
Filing Date :NA

(71)**Name of Applicant :**
**1)ENRAD LTD**
Address of Applicant :P.O. Box 64, 79335 Shahar Israel
(72)**Name of Inventor :**
**1)ELIYAHU, Nitzan**
**2)PELLEGRINI, Mirco**

(57) Abstract :
A precursor to an elastomeric composition with improved properties is disclosed. The precursor comprises a cross linkable rubber, a thermoplastic vulcanizate, and a cross-linking agent. An elastomeric composition produced by cross-linking of the rubber in the precursor and methods for manufacture of the precursor and the elastomeric composition are disclosed as well.

No. of Pages : 58 No. of Claims : 186

(12) PATENT APPLICATION PUBLICATION
(21) Application No.9367/DELNP/2014 A
(19) INDIA
(22) Date of filing of Application :07/11/2014
(43) Publication Date : 17/07/2015

(54) Title of the invention : HYDROCHLORIDE SALT OF PEPTIDE AND ITS USE IN COMBINATION WITH OTHER PEPTIDES FOR IMMUNOTHERAPY

(51) International classification :C07K7/08,A61K39/35
(31) Priority Document No :1208293.9
(32) Priority Date :11/05/2012
(33) Name of priority country :U.K.
(86) International Application No :PCT/GB2013/051201
Filing Date :09/05/2013
(87) International Publication No :WO 2013/167897
(61) Patent of Addition to Application Number :NA
Filing Date :NA
(62) Divisional to Application Number :NA
Filing Date :NA

(71)**Name of Applicant :**
**1)CIRCASSIA LIMITED**
Address of Applicant :The Oxford Science Park, Oxford, Oxfordshire OX4 4GA U.K.
(72)**Name of Inventor :**
**1)LAD3LER, Paul**
**2)FARKAS, Imre**

(57) Abstract :
The present invention relates to a hydrochloride salt of a peptide consisting of the sequence of CPAVKRDVDLFLT (SEQ ID NO: 1) as well as its combinations with other peptides for immunosuppressive purposes.

No. of Pages : 32 No. of Claims : 17

(12) PATENT APPLICATION PUBLICATION
(21) Application No.3192/DEL/2014 A
(19) INDIA
(22) Date of filing of Application :05/11/2014
(43) Publication Date : 17/07/2015

(54) Title of the invention : INTERNALLY STIFFENED EXTENDED SERVICE HEAT RECOVERY STEAM GENERATOR APPARATUS

(51) International classification :F22B1/18
(31) Priority Document No :14/081,365
(32) Priority Date :15/11/2013
(33) Name of priority country :U.S.A.
(86) International Application No :NA
Filing Date :NA
(87) International Publication No : NA
(61) Patent of Addition to Application Number :NA
Filing Date :NA
(62) Divisional to Application Number :NA
Filing Date :NA

(71)**Name of Applicant :**
**1)ALSTOM TECHNOLOGY LTD**
Address of Applicant :BROWN BOVERI STRASSE 7, 5400 BADEN, SWITZERLAND
(72)**Name of Inventor :**
**1)DONALD RICHARD PALMER**
**2)RICHARD F. MOORE**
**3)ASHOK PRABHU**

(57) Abstract :
A heat recovery steam generator (HRSG) includes a first casing having an interiot enclosing at least one duct for gas to flow therein along a gas flow axis. Each duct is defined by duct defining members that are spaced apart from each other and extend ink the interior of the first casing. A plurality of stiffening members are elongated along the gas flow axis. Each of the . stiffening members are positioned between two of the duct defining members. The stiffening members and.duct defining members have a substantially similar coefficient of thermal expansion.

No. of Pages : 27 No. of Claims : 20

(12) PATENT APPLICATION PUBLICATION
(21) Application No.622/DEL/2012 A
(19) INDIA
(22) Date of filing of Application :02/03/2012
(43) Publication Date : 17/07/2015

(54) Title of the invention : MUTANT MICROORGANISMS AND USES THEREOF

(51) International classification :C12N
(31) Priority Document No :NA
(32) Priority Date :NA
(33) Name of priority country :NA
(86) International Application No :NA
Filing Date :NA
(87) International Publication No : NA
(61) Patent of Addition to Application Number :NA
Filing Date :NA
(62) Divisional to Application Number :NA
Filing Date :NA

(71)**Name of Applicant :**
**1)DATTA Asis**
Address of Applicant :National Institute of Plant Genome Research (NIPGR) Aruna Asaf Ali Marg JNU Campus New Delhi 110067 India
(72)**Name of Inventor :**
**1)DATTA Asis**
**2)GHOSH Sumit**
**3)GHOSH Swagata**
**4)KONGARA Hanumantha Rao**
**5)KAMTHAN Mohan**

(57) Abstract :
The present invention provides recombinant microorganism incapable of utilizing the aminosugar, N-acetylglucosamine (GlcNAc). The recombinant microorganism show impaired colonization in the host as compared to a wild type microorganism strain. The present invention also provides compositions comprising the recombinant microorganism.

No. of Pages : 74 No. of Claims : 16

(12) PATENT APPLICATION PUBLICATION
(21) Application No.9359/DELNP/2014 A
(19) INDIA
(22) Date of filing of Application :07/11/2014
(43) Publication Date : 17/07/2015

(54) Title of the invention : BIOAVAILABILITY OF ORAL METHYLNALTREXONE INCREASES WITH A PHOSPHATIDYLCHOLINE-BASED FORMULATION

(51) International classification :A01N43/42,A61K31/44
(31) Priority Document No :61/642837
(32) Priority Date :04/05/2012
(33) Name of priority country :U.S.A.
(86) International Application No :PCT/US2013/031078
Filing Date :13/03/2013
(87) International Publication No :WO 2013/165577
(61) Patent of Addition to Application Number :NA
Filing Date :NA
(62) Divisional to Application Number :NA
Filing Date :NA

(71)**Name of Applicant :**
**1)UNIVERISTY OF CHICAGO**
Address of Applicant :5801 S. Ellis, Chicago IL 60637 U.S.A.
(72)**Name of Inventor :**
**1)YUAN Chun Su**
**2)WANG, Chong- Zhi**
**3)GU, Maojian**
**4)LIN, Dong- Hai**

(57) Abstract :
A pharmaceutical composition comprising a phosphatidylcholine-based opioid receptor antagonist formulation as well as methods of their use and methods of their preparation are provided herein. Such pharmaceutical composition may be used for treating and preventing opioid- induced side effects in patients, and may be provided to chronic opioid users as well.

No. of Pages : 54 No. of Claims : 87

(12) PATENT APPLICATION PUBLICATION
(19) INDIA
(22) Date of filing of Application :07/11/2014
(21) Application No.9360/DELNP/2014 A
(43) Publication Date : 17/07/2015

(54) Title of the invention : COMPOSITION FOR THE PRODUCTION OF HYDROPHILIC POLYSTYRENE

(51) International classification :C08L25/06,B65D81/26,C08J3/22
(31) Priority Document No :12003706.4
(32) Priority Date :09/05/2012
(33) Name of priority country :EPO
(86) International Application No :PCT/EP2013/001139
Filing Date :17/04/2013
(87) International Publication No :WO 2013/167230
(61) Patent of Addition to Application Number :NA
Filing Date :NA
(62) Divisional to Application Number :NA
Filing Date :NA

(71)**Name of Applicant :**
**1)CLARIANT FINANCE (BVI) LIMITED**
Address of Applicant :Rothausstrasse 61, CH-4132 Muttenz VIRGIN ISLANDS
(72)**Name of Inventor :**
**1)KOLDITZ, Pirko**
**2)LIEBEHENTSCHEL, Lutz**

(57) Abstract :
The invention relates to a composition Z comprising a component B, a component C, a component D, a component E and a component P, wherein the component B is a polyethylene glycol the component C is a polyglycerol, ester the component D is an earth alkali carbonate the component E is a phyllosilicate, and the component P is a polystyrene and/or an alloy thereof. Composition Z is suitable to increase the hydrophilic properties of processed solid or foamed polystyrene material especially for making a film sheet or food tray.

No. of Pages : 23 No. of Claims : 15

(12) PATENT APPLICATION PUBLICATION
(19) INDIA
(22) Date of filing of Application :07/11/2014
(21) Application No.9361/DELNP/2014 A
(43) Publication Date : 17/07/2015

(54) Title of the invention : BATTERY PACK

(51) International classification :H01M2/10
(31) Priority Document No :2012111421
(32) Priority Date :15/05/2012
(33) Name of priority country :Japan
(86) International Application No :PCT/JP2012/005186
Filing Date :17/08/2012
(87) International Publication No :WO 2013/171813
(61) Patent of Addition to Application Number :NA
Filing Date :NA
(62) Divisional to Application Number :NA
Filing Date :NA

(71)**Name of Applicant :**
**1)SONY CORPORATION**
Address of Applicant :1-7-1, Konan, Minato-ku Tokyo 1080075 Japan
(72)**Name of Inventor :**
**1)KUMAGAI Atsuhiro**
**2)YONISHI Kiyoshi**
**3)IKEDA Shigeji**

(57) Abstract :
A battery pack according to one embodiment of the present technology is provided with a pack main body and a plurality of terminals. The pack main body has: first and second main surfaces that face each other in the direction of a first axis; first and second end surfaces that face each other in the direction of a second axis orthogonal to the direction of the first axis; and first and second side surfaces that face each other in the direction of a third axis orthogonal to the directions of the first and second axes. The plurality of terminals include a positive terminal a negative terminal a temperature detection terminal and a control terminal each disposed on the first end surface in the direction of the third axis. The negative terminal is disposed between the temperature detection terminal and control terminal more toward the control terminal side than the temperature detection terminal side.

No. of Pages : 66 No. of Claims : 10

(12) PATENT APPLICATION PUBLICATION
(21) Application No.9362/DELNP/2014 A
(19) INDIA
(22) Date of filing of Application :07/11/2014
(43) Publication Date : 17/07/2015

(54) Title of the invention : METHOD FOR DE INTERLEAVING RECEIVED RADAR PULSES USING DYNAMICALLY UPDATED WEIGHTS

(51) International classification :G01S7/02,G01S7/292,G01S7/40
(31) Priority Document No :13/487044
(32) Priority Date :01/06/2012
(33) Name of priority country :U.S.A.
(86) International Application No :PCT/US2013/033387
Filing Date :21/03/2013
(87) International Publication No:WO 2014/011248
(61) Patent of Addition to Application Number :NA
Filing Date :NA
(62) Divisional to Application Number :NA
Filing Date :NA

(71)**Name of Applicant :**
**1)RAYTHEON COMPANY**
Address of Applicant :870 Winter Street, Waltham MA 02451 U.S.A.
(72)**Name of Inventor :**
**1)HAMMACK, George D.**

(57) Abstract :
The present invention provides a method for separating, or de-interleaving, a stream of radar pulses, interleaved in time, received by a receiving antenna (10) and receiver (12) from several radar sources. De-interleaving the stream of received pulses may include forming clusters of pulses having similar parameter values around anchor points, where each cluster is defined by a window around its anchor point. The dimensions of each window may be determined by a weighted distance , i.e., a measure of dissimilarity calculated using weights. Each weight may depend inversely on the measurement error in the parameter with which the weight is associated. Each anchor point may have a set of weights adjusted to its parameter values, and which may change as operating conditions change. The weights may be determined using a method including a calibration step, which may include injecting pulses with known parameters into the receiver (12).

No. of Pages : 20 No. of Claims : 19

(12) PATENT APPLICATION PUBLICATION
(19) INDIA
(22) Date of filing of Application :07/11/2014
(21) Application No.9379/DELNP/2014 A
(43) Publication Date : 17/07/2015

(54) Title of the invention : CONVEYING INSTALLATION WITH IMPROVED ENERGY REQUIREMENTS

(51) International classification :B65G15/42
(31) Priority Document No :10 2012 103 963.1
(32) Priority Date :07/05/2012
(33) Name of priority country :Germany
(86) International Application No :PCT/EP2013/059096
Filing Date :02/05/2013
(87) International Publication No :WO 2013/167449
(61) Patent of Addition to Application Number :NA
Filing Date :NA
(62) Divisional to Application Number :NA
Filing Date :NA

(71)**Name of Applicant :**
**1)CONTITECH TRANSPORTBANDSYSTEME GMBH**
Address of Applicant :Vahrenwalder Str. 9, 30165 Hannover Germany
(72)**Name of Inventor :**
**1)KANTOREK, Frank**
**2)THOMCZYK, Andrea**

(57) Abstract :
The invention relates to a conveying installation having a conveying belt comprising at least one side wall, constructed from in each case one polymer material with elastic properties, and/or at least one cleat constructed from in each case one polymer material with elastic properties and also having drums load -bearing rollers and load bearing frameworks wherein the conveying installation forms a material conveying upper strand with a supply location for the conveying material and an at least material free lower strand. The conveying installation according to the invention is distinguished in that at least one side wall and/or at least one cleat of the conveying belt contain/contains at least one foamed polymer mix.

No. of Pages : 12 No. of Claims : 5

(12) PATENT APPLICATION PUBLICATION
(21) Application No.9380/DELNP/2014 A
(19) INDIA
(22) Date of filing of Application :07/11/2014
(43) Publication Date : 17/07/2015

(54) Title of the invention : WIDEBAND LOW LATENCY REPEATER AND METHODS

(51) International classification :G01S7/02,G01S7/38
(31) Priority Document No :13/492625
(32) Priority Date :08/06/2012
(33) Name of priority country :U.S.A.
(86) International Application No :PCT/US2013/034644
Filing Date :29/03/2013
(87) International Publication No :WO 2013/184232
(61) Patent of Addition to Application Number :NA
Filing Date :NA
(62) Divisional to Application Number :NA
Filing Date :NA

(71)**Name of Applicant :**
**1)RAYTHEON COMPANY**
Address of Applicant :870 Winter Street, Waltham, MA 02451 U.S.A.
(72)**Name of Inventor :**
**1)SAVAGE, Lee M.**
**2)HENRY, James E.**
**3)BECKER, Jeffrey J.**
**4)WILSON, David Brent**

(57) Abstract :
A signal repeater (200) includes a signal processing part (202) and a signal repeating part (204). The signal processing part includes a converter (300) configured to receive an input signal and to convert the input signal into quadrature signals and a processor (302,304, 306) configured to process the quadrature signals to determine one or more characteristics of the input signal , and to compare the one or more characteristics of the input signal and a plurality of predetermined characteristics to generate a comparison result. The signal repeating part (204) is configured to selectively repeat the input signal as a repeated signal in accordance with the comparison result.

No. of Pages : 16 No. of Claims : 20

(12) PATENT APPLICATION PUBLICATION
(21) Application No.9381/DELNP/2014 A
(19) INDIA
(22) Date of filing of Application :07/11/2014
(43) Publication Date : 17/07/2015

(54) Title of the invention : COMPOSITIONS COMPRISING A BIOLOGICAL CONTROL AGENT AND AN INSECTICIDE

| | |
|---|---|
| (51) International classification | :A01N41/10,A01N43/56,A01N63/00 |
| (31) Priority Document No | :12169936.7 |
| (32) Priority Date | :30/05/2012 |
| (33) Name of priority country | :EPO |
| (86) International Application No | :PCT/EP2013/061036 |
| Filing Date | :29/05/2013 |
| (87) International Publication No | :WO 2013/178664 |
| (61) Patent of Addition to Application Number | :NA |
| Filing Date | :NA |
| (62) Divisional to Application Number | :NA |
| Filing Date | :NA |

(71)**Name of Applicant :**
**1)BAYER, CROPSCIENCE AG**
Address of Applicant :Alfred -Nobel -Strasse 50, 40789 Monheim Germany
(72)**Name of Inventor :**
**1)HELLWEGE, Elke**
**2)ANDERSCH, Wolfram**
**3)STENZEL, Klaus**
**4)SPRINGER, Bernd**

(57) Abstract :
The present invention relates to a composition comprising at least one biological control agent selected from the group consisting of Bacillus chitinosporus AQ746 (NRRL Accession No. B-21618) Bacillus mycoldes AQ726 (NRRL Accession No. B- 21664) Bacillus pumilus (NRRL Accession No. B 30087) Bacillus pumilus AQ717 (NRRL Accession No. B- 21662) Bacillus sp. AQ175 (ATCC Accession No. 55608) Bacillus sp AQ177 (ATCC Accession No. 55609) Bacillus sp. AQ178 (ATCC Accession No. 53522) Bacillus subtilis AQ743 (NRRL Accession No. B-21665) Bacillus subtilis AQ713 (NRRL Accession No. B- 21661 ) Bacillus subtilis AQ153 (ATCC Accession No. 55614) Bacillus thuringiensis BD 32 (NRRL Accession No. B 21530) Bacillus thuringiensis AQ52 (NRRL Accession No. B 21619) Muscodor albus 620 (NRRL Accession No. 30547) Muscodor roseus A3 5 (NRRL Accession No. 30548) Rhodococcus globerulus AQ719 (NRRL Accession No. B-21663) Streptomyces galbus (NRRL Accession No. 30232) Streptomyces sp. (NRRL Accession No. B- 30145) Bacillus thuringiensis subspec. kurstaki BMP 123 Bacillus subtilis AQ30002 (NRRL Accession No. B-50421) and Bacillus subtilis AQ 30004 (NRRL Accession No. B 50455) and/or a mutant of these strains having all the identifying characteristics of the respective strain and/or a metabolite produced by the respective strain that exhibits activity against insects mites, nematodes and/or phytopathogens and at least one insecticide selected from the group consisting of ryanodine receptor modulators in a synergistically effective amount. Furthermore the present invention relates to the use of this composition as well as a method for reducing overall damage of plants and plant parts.

No. of Pages : 88 No. of Claims : 15

(12) PATENT APPLICATION PUBLICATION
(21) Application No.9382/DELNP/2014 A
(19) INDIA
(22) Date of filing of Application :07/11/2014
(43) Publication Date : 17/07/2015

(54) Title of the invention : FIELD EFFECT TRANSISTOR DEVICE INCLUDING THE TRANSISTOR AND METHODS OF FORMING AND USING SAME

(51) International classification :G01N27/414,G01N33/487
(31) Priority Document No :61/621966
(32) Priority Date :09/04/2012
(33) Name of priority country :U.S.A.
(86) International Application No :PCT/US2013/035852
Filing Date :09/04/2013
(87) International Publication No :WO 2013/155116
(61) Patent of Addition to Application Number :NA
Filing Date :NA
(62) Divisional to Application Number :NA
Filing Date :NA

(71)**Name of Applicant :**
**1)TAKULAPALLI, Bharath**
Address of Applicant :863 East Sheffield Avenue, Chandler, AZ 85225 U.S.A.
(72)**Name of Inventor :**
**1)TAKULAPALLI, Bharath**

(57) Abstract :
The present disclosure provides an improved field effect transistor and device that can be used to sense and characterize a variety of materials. The field effect transistor and/or device including the transistor may be used for a variety of applications, including genome sequencing protein sequencing, biomolecular sequencing, and detection of ions molecules, chemicals biomolecules, metal atoms, polymers, nanoparticles and the like.

No. of Pages : 42 No. of Claims : 41

(12) PATENT APPLICATION PUBLICATION
(19) INDIA
(22) Date of filing of Application :07/11/2014
(21) Application No.9383/DELNP/2014 A
(43) Publication Date : 17/07/2015

(54) Title of the invention : MODULATION OF OXIDATIVE STRESS INFLAMMATION AND IMPAIRED INSULIN SENSITIVITY WITH GRAPE SEED EXTRACT

(51) International classification :A61K36/87
(31) Priority Document No :61/622339
(32) Priority Date :10/04/2012
(33) Name of priority country :U.S.A.
(86) International Application No :PCT/US2013/035944
Filing Date :10/04/2013
(87) International Publication No :WO 2013/155166
(61) Patent of Addition to Application Number :NA
Filing Date :NA
(62) Divisional to Application Number :NA
Filing Date :NA

(71)**Name of Applicant :**
**1)THE REGENTS OF THE UNIVERSITY OF CALIFORNIA**
Address of Applicant :1111 Franklin Street, Oakland, CA-94607 5200 U.S.A.
(72)**Name of Inventor :**
**1)KAPPAGODA, Chulani**
**2)BURTON- FREEMAN, Britt**
**3)EDIRISINGUE, Indika**

(57) Abstract :
Method for modulating oxidative stress, inflammation, and impaired insulin sensitivity in a subject by using a grape seed extract, the method being useful in modulating post- prandial oxidative stress, inflammation and impaired insulin sensitivity in patients suffering from Metabolic Syndrome (MetS). The method comprising administering a therapeutically effective amount of a grape seed extract and a pharmaceutically acceptable excipient. The grape seed extract is a polyphenolic extract comprising pro anthocyanidins and anthocyanidins.

No. of Pages : 33 No. of Claims : 26

(12) PATENT APPLICATION PUBLICATION
(19) INDIA
(22) Date of filing of Application :07/11/2014
(21) Application No.9384/DELNP/2014 A
(43) Publication Date : 17/07/2015

(54) Title of the invention : GUIDING A USER TO SAFETY FROM THE PREMISES OF AN INDUSTRIAL PLANT

(51) International classification :G08B27/00,G08B7/06
(31) Priority Document No :NA
(32) Priority Date : -
(33) Name of priority country :
(86) International Application No :PCT/EP2012/059820
Filing Date :25/05/2012
(87) International Publication No :WO 2013/174441
(61) Patent of Addition to Application Number :NA
Filing Date :NA
(62) Divisional to Application Number :NA
Filing Date :NA

(71)**Name of Applicant :**
**1)ABB RESEARCH LTD**
Address of Applicant :Affolternstrasse 44, CH- 8050 Z¼rich Switzerland
(72)**Name of Inventor :**
**1)VARTIAINEN, Elina**
**2)OLAUSSON, Martin**
**3)BR–NMARK, Jonas**

(57) Abstract :
The invention relates to a method safety route guiding device and a computer program product enabling users in the premises (45) of an industrial plant (10) to reach safety in case of an emergency where said users are equipped with mobile terminals (32,34,36,38) where the safety route guiding device comprises a guiding unit (41) that receives alarm data concerning an emergency in a clearance zone (CZ) of the premises, the alarm data being relevant for a user of a mobile terminal (32) obtains data of a set of other users affected by the emergency, guides the user from the clearance zone (CZ) to a security zone (SZ) outside the premises, obtains status data concerning the other users in the set, and presents the status data to the user via the mobile terminal (32).

No. of Pages : 37 No. of Claims : 16

(12) PATENT APPLICATION PUBLICATION
(19) INDIA
(22) Date of filing of Application :07/11/2014
(21) Application No.9385/DELNP/2014 A
(43) Publication Date : 17/07/2015

(54) Title of the invention : THREE STAGE FOLDED CLOS OPTIMIZATION FOR 802.1AQ

(51) International classification :H04L12/721,H04L12/937
(31) Priority Document No :13/458675
(32) Priority Date :27/04/2012
(33) Name of priority country :U.S.A.
(86) International Application No :PCT/IB2013/052862
Filing Date :11/04/2013
(87) International Publication No :WO 2013/160786
(61) Patent of Addition to Application Number :NA
Filing Date :NA
(62) Divisional to Application Number :NA
Filing Date :NA

(71)**Name of Applicant :**
**1)TELEFONAKTIEBOLAGET L M ERICSSON (PUBL)**
Address of Applicant :S- 164 83 Stockholm Sweden
(72)**Name of Inventor :**
**1)ALLAN, David Ian**

(57) Abstract :
A three stage folded Clos network is used for Ethernet routing with improved efficiency for computational complexity, network administration, multicast addressing and load redistribution upon failure. The network includes an array of root nodes coupled to an array of edge nodes. Forwarding states are computed and installed for spanning trees rooted on the root nodes. When an edge node is identified as having a failed connection to a root node a shortest path first (SPF) tree rooted on that edge node is constructed for each Backbone VLAN identifier (B VID) for the spanning trees rooted on that root node and use the failed connection. A filtering database in each node is populated for edge node pairs having a common service identifier and unicast and multicast data are forwarded between the edge node pairs according to the filtering database via the SPF trees using a hybrid multicast addressing.

No. of Pages : 46 No. of Claims : 27

(12) PATENT APPLICATION PUBLICATION
(19) INDIA
(22) Date of filing of Application :07/11/2014
(21) Application No.9386/DELNP/2014 A
(43) Publication Date : 17/07/2015

(54) Title of the invention : TIRE TREAD GEOREINFORCING ELEMENTS AND SYSTEMS

(51) International classification :E02D17/20
(31) Priority Document No :61/621932
(32) Priority Date :09/04/2012
(33) Name of priority country :U.S.A.
(86) International Application No :PCT/US2013/035677
Filing Date :08/04/2013
(87) International Publication No :WO 2013/155018
(61) Patent of Addition to Application Number :NA
Filing Date :NA
(62) Divisional to Application Number :NA
Filing Date :NA

(71)**Name of Applicant :**
**1)ARMATERRA INC**
Address of Applicant :3495 Lakeside Drive #220 Reno NV 89509 U.S.A.
**2)MERRILL Michael J**
(72)**Name of Inventor :**
**1)MERRILL, Michael J.**

(57) Abstract :
The present disclosure provides embodiments directed to earth reinforcement. The present embodiments can be made from used tire threads or equivalent new material. Used tires are particularly advantageous as they are relatively inexpensive materials and results in the added collateral benefit of repurposing materials that would otherwise be destined for disposal in landfills. The embodiments are easily constructed, can be made from non corrosive materials, and can be assembled at the site of deployment.

No. of Pages : 29 No. of Claims : 20

(12) PATENT APPLICATION PUBLICATION
(19) INDIA
(22) Date of filing of Application :07/11/2014
(21) Application No.3230/DEL/2014 A
(43) Publication Date : 17/07/2015

(54) Title of the invention : ACCESSORY DRIVE WITH FRICTION CLUTCH AND ELECTRIC MOTOR

(51) International classification :F16D
(31) Priority Document No :14/135,280
(32) Priority Date :19/12/2013
(33) Name of priority country :U.S.A.
(86) International Application No :NA
Filing Date :NA
(87) International Publication No : NA
(61) Patent of Addition to Application Number :NA
Filing Date :NA
(62) Divisional to Application Number :NA
Filing Date :NA

(71)**Name of Applicant :**
**1)BORGWARNER INC.**
Address of Applicant :3850 Hamlin Road, Auburn Hills, MI 48326-2872 (US) U.S.A.
(72)**Name of Inventor :**
**1)QIN, Shiwei**

(57) Abstract :
A friction clutch assembly for a vehicle accessory, particularly to drive a vehicle cooling pump, and more particularly as part of a dual mode drive for a cooling pump, together with an electric motor. The friction clutch assembly includes a friction plate member connected to a central rotatable shaft member used for operating the vehicle accessory. A biased armature member is adapted to force a friction plate member with friction linings thereon against a housing or cover which is rotating at input speed. A solenoid assembly is used to overcome the spring bias and pull the armature and friction plate member away from the housing.

No. of Pages : 21 No. of Claims : 15

(12) PATENT APPLICATION PUBLICATION
(19) INDIA
(22) Date of filing of Application :07/11/2014

(21) Application No.3231/DEL/2014 A
(43) Publication Date : 17/07/2015

(54) Title of the invention : ACTUATOR WITH VALVE RETURN

(51) International classification :f16k
(31) Priority Document No :61/914,639
(32) Priority Date :11/12/2013
(33) Name of priority country :U.S.A.
(86) International Application No :NA
Filing Date :NA
(87) International Publication No : NA
(61) Patent of Addition to Application Number :NA
Filing Date :NA
(62) Divisional to Application Number :NA
Filing Date :NA

(71)**Name of Applicant :**
**1)BORGWARNER INC.**
Address of Applicant :3850 Hamlin Road, Auburn Hills, MI 48326 (US) U.S.A.
(72)**Name of Inventor :**
**1)KEEFOVER, Robert**
**2)FEINER, Aaron**

(57) Abstract :
A number of variations may include a product, which may include an actuator including a rotatory portion for moving a valve from a first position to a second position and a biasing spring for retuning the valve to the first position.

No. of Pages : 43 No. of Claims : 10

(12) PATENT APPLICATION PUBLICATION
(21) Application No.3232/DEL/2014 A
(19) INDIA
(22) Date of filing of Application :07/11/2014
(43) Publication Date : 17/07/2015

(54) Title of the invention : ACCESSORY ON-OFF DRIVE WITH FRICTION CLUTCH

(51) International classification :F16D
(31) Priority Document No :14/135,280
(32) Priority Date :19/12/2013
(33) Name of priority country :U.S.A.
(86) International Application No :NA
Filing Date :NA
(87) International Publication No : NA
(61) Patent of Addition to Application Number :NA
Filing Date :NA
(62) Divisional to Application Number :NA
Filing Date :NA

(71)**Name of Applicant :**
**1)BORGWARNER INC.**
Address of Applicant :3850 Hamlin Road, Auburn Hills, MI 48326-2872 (US) U.S.A.
(72)**Name of Inventor :**
**1)QIN, Shiwei**

(57) Abstract :
An ON-OFF vehicle accessory for driving vehicle cooling pump or cooling fan. The accessory having a friction clutch assembly with a friction plate member connected to a central rotatable shaft member. A biased armature member is adapted to force a friction plate member with friction linings thereon against a housing or cover which is rotating at input speed. A solenoid assembly is used to overcome the spring bias and pull the armature and friction plate member away from the housing.

No. of Pages : 19 No. of Claims : 15

(12) PATENT APPLICATION PUBLICATION
(19) INDIA
(22) Date of filing of Application :07/11/2014
(21) Application No.9396/DELNP/2014 A
(43) Publication Date : 17/07/2015

(54) Title of the invention : A PORTABLE WATERPROOF SOLAR POWERED CHARGER

(51) International classification :H02J7/35,H01L31/048
(31) Priority Document No :
(32) Priority Date : -
(33) Name of priority country :
(86) International Application No :PCT/US2013/040225
Filing Date :08/05/2013
(87) International Publication No :WO 2013/169959
(61) Patent of Addition to Application Number :NA
Filing Date :NA
(62) Divisional to Application Number :NA
Filing Date :NA

(71)**Name of Applicant :**
**1)WORLD PANEL, INC.**
Address of Applicant :300 Center Drive, Ste. G -278, Boulder, Colorado 80027 U.S.A.
(72)**Name of Inventor :**
**1)ANDERSON, John A.**

(57) Abstract :
A stand -alone solar power charger that may be configured for direct coupling to a plurality of portable electronic devices. The solar power charger is particularized to power and/or charge an intended portable device or a set of intended portable devices having direct current (DC) load requirements. The solar power charger discharges energy without the use of an internal battery or ancillary electronic circuit boards, and facilitates fast charging modes. More specifically, the solar power charger incorporates a variety of features that make the design rugged, compact, waterproof, and durable.

No. of Pages : 83 No. of Claims : 20

(12) PATENT APPLICATION PUBLICATION
(19) INDIA
(22) Date of filing of Application :07/11/2014
(21) Application No.9397/DELNP/2014 A
(43) Publication Date : 17/07/2015

(54) Title of the invention : A DIRECTLY COUPLED POWER CONDITIONED SOLAR CHARGER

(51) International classification :H02J7/00,H01L31/18
(31) Priority Document No :61/644432
(32) Priority Date :09/05/2012
(33) Name of priority country :U.S.A.
(86) International Application No :PCT/US2013/040223
Filing Date :08/05/2013
(87) International Publication No :WO 2013/169958
(61) Patent of Addition to Application Number :NA
Filing Date :NA
(62) Divisional to Application Number :NA
Filing Date :NA

(71)**Name of Applicant :**
**1)WORLD, PANEL, INC.**
Address of Applicant :300 Center Drive, Ste. G- 278 Boulder, Colorado 80027 U.S.A.
(72)**Name of Inventor :**
**1)ANDERSON, John, A.**

(57) Abstract :
The present invention relates to methods tools and systems for manufacturing a durable and portable power conditioned personal solar system charging apparatus. Various voltage and amperage matching algorithms are manipulated to particularize the personal solar system to power and/or charge an intended portable device or a set of intended portable devices having direct current (DC) load requirements. The optimized personal solar system that is matched to an intended device allows direct coupling to the intended device without the use of an internal battery or ancillary electronic circuit boards to distract the personal solar system output, and facilitates fast charging modes.

No. of Pages : 83 No. of Claims : 20

(12) PATENT APPLICATION PUBLICATION
(19) INDIA
(22) Date of filing of Application :07/11/2014
(21) Application No.9398/DELNP/2014 A
(43) Publication Date : 17/07/2015

(54) Title of the invention : PUMP UNIT PUMP UNIT CONFIGURATION SYSTEM AND METHOD

| | |
|---|---|
| (51) International classification | :F04B49/06,F04D27/00,F04C14/00 |
| (31) Priority Document No | :10 2012 104 214.4 |
| (32) Priority Date | :15/05/2012 |
| (33) Name of priority country | :Germany |
| (86) International Application No | :PCT/EP2013/059997 |
| Filing Date | :15/05/2013 |
| (87) International Publication No | :WO 2013/171245 |
| (61) Patent of Addition to Application Number | :NA |
| Filing Date | :NA |
| (62) Divisional to Application Number | :NA |
| Filing Date | :NA |

(71)**Name of Applicant :**
**1)XYLEM IP HOLDINGS LLC**
Address of Applicant :1133 Westchester Avenue, White Plains, New York 10604 U.S.A.
(72)**Name of Inventor :**
**1)LAING, Karsten**

(57) Abstract :
The invention relates to a pump unit comprising a pump and an inverter drive said inverter drive, comprising a motor for driving the pump, a control unit, for controlling the motor and a storage unit operatively connected to the control unit, said storage unit having stored therein a control program which determines the range of functions and/or the mode of functioning of the pump unit and wherein the motor is controllable by the control unit depending on the control program. In order to provide such a pump unit, which allows for more versatile use the invention proposes that the pump unit comprise a communication unit which is configured for establishing a contactless communication link with an external configuration device and that configuration data be transmittable, via the communication link, from the configuration device to the pump unit and that the control program stored in the storage unit be modifiable for changing the range, of functions and/or the mode of functioning of the pump unit depending on the configuration data transmitted. The invention further relates to a pump unit configuration system and a method.

No. of Pages : 42 No. of Claims : 32

(12) PATENT APPLICATION PUBLICATION
(21) Application No.111/DEL/2014 A
(19) INDIA
(22) Date of filing of Application :15/01/2014
(43) Publication Date : 17/07/2015

(54) Title of the invention : LAMINATED BAG FOR PHARMACEUTICALS

(51) International classification :B65D
(31) Priority Document No :NA
(32) Priority Date :NA
(33) Name of priority country :NA
(86) International Application No :NA
Filing Date :NA
(87) International Publication No : NA
(61) Patent of Addition to Application Number :NA
Filing Date :NA
(62) Divisional to Application Number :NA
Filing Date :NA

(71)**Name of Applicant :**
**1)DSM SINOCHEM PHARMACEUTICALS NETHERLANDS B.V.**
Address of Applicant :ALEXANDER FLEMINGLAAN 1, NL-2613 AX DELFT, THE NETHERLANDS
(72)**Name of Inventor :**
**1)SRIDHARAN, PRANESH**
**2)KUMAR, ARVIND**

(57) Abstract :
The present invention relates to a laminated bag containing an active pharmaceutical ingredient, a method for packaging an active pharmaceutical ingredient and the use of a laminated bag for packaging an active pharmaceutical ingredient.

No. of Pages : 15 No. of Claims : 15

(12) PATENT APPLICATION PUBLICATION
(19) INDIA
(22) Date of filing of Application :07/05/2012
(21) Application No.1393/DEL/2012 A
(43) Publication Date : 17/07/2015

(54) Title of the invention : AIR-BLOWING TYPE POSITIONING DEVICE FOR BUTTON CONVEYER

(51) International classification :B65B25/06
(31) Priority Document No :NA
(32) Priority Date :NA
(33) Name of priority country :NA
(86) International Application No :NA
Filing Date :NA
(87) International Publication No :NA
(61) Patent of Addition to Application Number :NA
Filing Date :NA
(62) Divisional to Application Number :NA
Filing Date :NA

(71)**Name of Applicant :**
**1)KAULIN MFG. CO. LIMITED**
Address of Applicant :11F, NO. 128, SEC. 3, MIN-SHENG E. RD., SONG-SHAN DISTRICT, TAIPEI CITY, TAIWAN (R.O.C.).
(72)**Name of Inventor :**
**1)LIN, PEI-CHIA**

(57) Abstract :
The button positioning device includes a support, a pair of side blockers, an air supplier and an upper blocker. The support has a mount plate with a flat surface. The side blockers are disposed on the flat surface of the mount plate. A guiding trough is formed between the side blockers. The air supplier has an outlet formed in the mount plate and passing through the flat surface. An internal angle formed between an extending line of the outlet and the flat surface is less than 90 degrees. The upper blocker has a blocker rod disposed on the mount plate and corresponding to the guiding trough in position.

No. of Pages : 14 No. of Claims : 12

(12) PATENT APPLICATION PUBLICATION
(21) Application No.658/DEL/2012 A
(19) INDIA
(22) Date of filing of Application :07/03/2012
(43) Publication Date : 17/07/2015

(54) Title of the invention : LOW LOAD LOW FREQUENCY PIEZO-ELECTRIC POWER GENERATOR •

(51) International classification :H02J
(31) Priority Document No :NA
(32) Priority Date :NA
(33) Name of priority country :NA
(86) International Application No :NA
Filing Date :NA
(87) International Publication No : NA
(61) Patent of Addition to Application Number :NA
Filing Date :NA
(62) Divisional to Application Number :NA
Filing Date :NA

(71)**Name of Applicant :**
**1)DIRECTOR GENERAL DEFENCE RESEARCH & DEVELOPMENT ORGANISATION**
Address of Applicant :Ministry of Defence Govt. of India Room No. 348 B-Wing DRDO Bhawan Rajaji Marg New Delhi 110011 India
(72)**Name of Inventor :**
**1)AJIT RAYMOND JAMES**

(57) Abstract :
The present invention relates to piezoelectric power generators. In one embodiment the piezoelectric power generator comprises a piezoelectric module for generating electrical energy from a mechanical stimulus. Further the power generator comprises a PCB coupled with the piezoelectric module configured to receive the electrical energy of low potential and converting the same into high potential voltage via a power conditioning circuit embedded within the PCB. The power conditioning circuit comprises a rectifier for rectifying the input voltage and a voltage step-up converter for stepping the voltage from low potential to a high potential. The voltage step-up converter operates in a discontinuous mode resulting in resistive impedance matching. The power generator can be personnel wearable due to its compact size and less weight.

No. of Pages : 20 No. of Claims : 14

(12) PATENT APPLICATION PUBLICATION
(19) INDIA
(22) Date of filing of Application :10/11/2014
(21) Application No.9412/DELNP/2014 A
(43) Publication Date : 17/07/2015

(54) Title of the invention : USE OF SEAPROSE TO REMOVE BACTERIAL BIOFILM

(51) International classification :A61K38/48,A61L27/54,A61L29/16
(31) Priority Document No :61/645815
(32) Priority Date :11/05/2012
(33) Name of priority country :U.S.A.
(86) International Application No :PCT/US2013/040514
Filing Date :10/05/2013
(87) International Publication No :WO 2013/170128
(61) Patent of Addition to Application Number :NA
Filing Date :NA
(62) Divisional to Application Number :NA
Filing Date :NA

(71)**Name of Applicant :**
**1)SMITH & NEPHEW INC.**
Address of Applicant :1450 Brooks Road, Memphis, TN 38116 U.S.A.
(72)**Name of Inventor :**
**1)SHI, Lei**
**2)JOVANOVIC, Aleksa**
**3)VAN DER KAR, Catherine**
**4)ROCHE, Eric**

(57) Abstract :
Disclosed are compositions and methods for their use in disrupting a bacterial biofilm present on a surface, comprising applying a composition that includes Seaprose to the bacterial biofilm, wherein application of the composition to the bacterial biofilm disrupts the matrix of the bacterial biofilm.

No. of Pages : 30 No. of Claims : 47

(12) PATENT APPLICATION PUBLICATION
(21) Application No.9413/DELNP/2014 A
(19) INDIA
(22) Date of filing of Application :10/11/2014
(43) Publication Date : 17/07/2015

(54) Title of the invention : VEHICLE AIR CONDITIONER

(51) International classification :B60H1/00,B60H1/32
(31) Priority Document No :2012109746
(32) Priority Date :11/05/2012
(33) Name of priority country :Japan
(86) International Application No :PCT/JP2013/002601
Filing Date :17/04/2013
(87) International Publication No :WO 2013/168369
(61) Patent of Addition to Application Number :NA
Filing Date :NA
(62) Divisional to Application Number :NA
Filing Date :NA

(71)**Name of Applicant :**
**1)DENSO CORPORATION**
Address of Applicant :1 1 Showa cho Kariya city Aichi 4488661 Japan
(72)**Name of Inventor :**
**1)NAKAMURA Takahito**
**2)KOBAYASHI Ryo**

(57) Abstract :
An indoor unit (1) is provided with: a drainage passage (34) that forms a first space through which water inside an air conditioning case (2) which has dropped from a source opening section (32) flows down and communicates with a drain port (3a); and an upright wall section (33) and a hanging wall section (43) that constitute a partition wall separating the drainage passage and a second space (44) which is adjacent to the drainage passage in such a manner that the water that has dropped into the drainage passage does not flow into the second space. Prevention walls (37, 47, 50) which extend upward from a bottom wall are disposed inside the second space, and the upper ends of the prevention walls are higher than the position of a fitting section (20) where a first case member (3) and a second case member (4) fit together. According to this configuration, water inside the air conditioning case can be discharged to the outside from the drain port, which communicates with one of the drainage passages, and water leakages from the fitting area of the plurality of case members can be prevented.

No. of Pages : 28 No. of Claims : 9

(12) PATENT APPLICATION PUBLICATION
(21) Application No.1013/DEL/2012 A
(19) INDIA
(22) Date of filing of Application :02/04/2012
(43) Publication Date : 17/07/2015

(54) Title of the invention : K.E.S.D

(51) International classification :F02c
(31) Priority Document No :NA
(32) Priority Date :NA
(33) Name of priority country :NA
(86) International Application No :NA
Filing Date :NA
(87) International Publication No :NA
(61) Patent of Addition to Application Number :NA
Filing Date :NA
(62) Divisional to Application Number :NA
Filing Date :NA

(71)**Name of Applicant :**
**1)LALIT KAUSHIK**
Address of Applicant :C-6, RATTAN PARK, NANGLOI, DELHI-110041. India
(72)**Name of Inventor :**
**1)LALIT KAUSHIK**

(57) Abstract :
The KINETIC ENERGY storing device is the new innovation in this word. Its can capable to change the current look of automobile industries about braking and accelerating system. In this innovation the waste kinetic energy of the vehicle is store after applied the brakes and during accelerator we can uses of this same store kinetic energy. Now with the use of this innovation all the automobile industries increase the millage of their vehicles and reduces the fuel consumption during idle acceleration time and also reduce the distance of vehicle after applied the brakes and the life of the brakes pads are automatically increase when we use this innovation technology in all the vehicles of the automobile industries.

No. of Pages : 18 No. of Claims : 9

(12) PATENT APPLICATION PUBLICATION
(21) Application No.3914/DEL/2012 A
(19) INDIA
(22) Date of filing of Application :19/12/2012
(43) Publication Date : 17/07/2015

(54) Title of the invention : A METHOD AND SYSTEM FOR COMMUNICATING DIGITAL DATA OVER VOICE CHANNEL OF CELLULAR COMMUNICATION NETWORK

(51) International classification :H04N
(31) Priority Document No :NA
(32) Priority Date :NA
(33) Name of priority country :NA
(86) International Application No :NA
Filing Date :NA
(87) International Publication No : NA
(61) Patent of Addition to Application Number :NA
Filing Date :NA
(62) Divisional to Application Number :NA
Filing Date :NA

(71)**Name of Applicant :**
**1)DIRECTOR GENERAL DEFENCE RESEARCH & DEVELOPMENT ORGANISATION (DRDO)**
Address of Applicant :Ministry of Defence Govt. of India Room No. 348 B-wing DRDO Bhawan Rajaji Marg New Delhi 110 105 India
(72)**Name of Inventor :**
**1)RITURAJ KUMAR**
**2)UMESH MADHAV DATE**

(57) Abstract :
Embodiments of the present disclosure provides a method and system for transmitting and receiving digital data over the voice channel of a cellular communication network by using a prime number modem. The modem at the transmitting side receives the digital data and generates an audio signal corresponding to the received digital data. The frequency of the audio signal is derived from a codebook. The audio signal is transmitted over the voice channel of the communication network. A modem configured at the receiving side converts the received audio signal to the digital data using the codebook and frequency correlation techniques. The encoding mechanism described in this disclosure ensures that the decoding mechanism is agonistic to linear distortions of the communication channel. The encoding mechanism enables transmission of digital data over the voice channel of a cellular network without necessitating any changes to the existing infrastructure.

No. of Pages : 22 No. of Claims : 11

(12) PATENT APPLICATION PUBLICATION
(21) Application No.9407/DELNP/2014 A
(19) INDIA
(22) Date of filing of Application :08/11/2014
(43) Publication Date : 17/07/2015

(54) Title of the invention : DOHERTY AMPLIFIER

(51) International classification :H03F1/07
(31) Priority Document No :NA
(32) Priority Date :NA
(33) Name of priority country :NA
(86) International Application No :PCT/CN2012/000862
Filing Date :21/06/2012
(87) International Publication No :WO 2013/188994
(61) Patent of Addition to Application Number :NA
Filing Date :NA
(62) Divisional to Application Number :NA
Filing Date :NA

(71)**Name of Applicant :**
**1)TELEFONAKTIEBOLAGET L M ERICSSON (publ)**
Address of Applicant :S 164 83 Stockholm Sweden
(72)**Name of Inventor :**
**1)LIAO, Zhongyu**
**2)XIE, Yuanchun**

(57) Abstract :
A Doherty amplifier (300) is provided, it comprises: a main amplifier (301) and a peak amplifier (302); a first microstrip (303) with /4 electric length connected between the main amplifier and the peak amplifier; a second microstrip (304) with /4 electric length connected between a junction of outputs of the peak amplifier and the main amplifier, and an output terminal (306); at least a tuner (305) for adjusting radius of VSWR circle of the main amplifier and connected in series with the first microstrip (303), between the main amplifier (301) and the peak amplifier (302) based on input signal power. The back -off power level efficiency is increased by enlarge the VSWR radius with the new Doherty structure.

No. of Pages : 20 No. of Claims : 10

(12) PATENT APPLICATION PUBLICATION
(19) INDIA
(22) Date of filing of Application :08/11/2014
(21) Application No.9408/DELNP/2014 A
(43) Publication Date : 17/07/2015

(54) Title of the invention : DEVICES AND METHODS INCLUDING POLYACETYLENES

(51) International classification :H01G11/32,H01G11/48
(31) Priority Document No :61/623887
(32) Priority Date :13/04/2012
(33) Name of priority country :U.S.A.
(86) International Application No :PCT/US2013/030738
Filing Date :13/03/2013
(87) International Publication No :WO 2013/154724
(61) Patent of Addition to Application Number :NA
Filing Date :NA
(62) Divisional to Application Number :NA
Filing Date :NA

(71)**Name of Applicant :**
**1)POLYJOULE, INC.**
Address of Applicant :6 Oakdale Lane, Lincoln, MA 01773 U.S.A.
(72)**Name of Inventor :**
**1)HUNTER, Ian W.**
**2)SWAGER, Timothy M.**
**3)ZHU, Zhengguo**

(57) Abstract :
Embodiments described herein relate to compositions, devices, and methods for storage of energy (e.g. electrical energy) involving polyacetylene containing polymers.

No. of Pages : 43 No. of Claims : 128

(12) PATENT APPLICATION PUBLICATION
(19) INDIA
(22) Date of filing of Application :08/11/2014
(21) Application No.9409/DELNP/2014 A
(43) Publication Date : 17/07/2015

(54) Title of the invention : METHOD FOR IDENTIFYING THE EDGES ON A CAMSHAFT TARGET

(51) International classification :F02D41/00,G01M15/04
(31) Priority Document No :1255482
(32) Priority Date :12/06/2012
(33) Name of priority country :France
(86) International Application No :PCT/EP2013/001631
Filing Date :04/06/2013
(87) International Publication No :WO 2013/185890
(61) Patent of Addition to Application Number :NA
Filing Date :NA
(62) Divisional to Application Number :NA
Filing Date :NA

(71)**Name of Applicant :**
**1)CONTINENTAL AUTOMOTIVE FRANCE**
Address of Applicant :Intellectual Property, 1 Avenue Paul Ourliac, 31100 Toulouse France
**2)CONTINENTAL AUTOMOTIVE GMBH**
(72)**Name of Inventor :**
**1)ZOUBOFF, Pierre**
**2)LACHAIZE, Jr´me**

(57) Abstract :
The invention relates to a method for identifying edges on a camshaft target (30) having a plurality of teeth on the periphery thereof, the plurality of teeth forming a series of M edges when the camshaft makes one revolution wherein said method includes the steps of: for each of the M edges, computing the characteristic P(i) denoting the angular distance between the edge i and the preceding edge; when the camshaft target is moved, computing, upon the detection of an edge an index T(i) indicating the time that has elapsed from the occurrence of the edge i 1 until the edge i; comparing the index CT(k) to each CP(j); and determining the position of the camshaft.

No. of Pages : 26 No. of Claims : 10

(12) PATENT APPLICATION PUBLICATION
(19) INDIA
(22) Date of filing of Application :13/01/2014
(21) Application No.86/DEL/2014 A
(43) Publication Date : 17/07/2015

(54) Title of the invention : AN INORGANIC BLUE COLORANT AND A PROCESS FOR THE PREPARATION THEREOF

(51) International classification :F25J
(31) Priority Document No :NA
(32) Priority Date :NA
(33) Name of priority country :NA
(86) International Application No :NA
Filing Date :NA
(87) International Publication No : NA
(61) Patent of Addition to Application Number :NA
Filing Date :NA
(62) Divisional to Application Number :NA
Filing Date :NA

(71)**Name of Applicant :**
**1)COUNCIL OF SCIENTIFIC & INDUSTRIAL RESEARCH**
Address of Applicant :ANUSANDHAN BHAWAN, RAFI MARG, NEW DELHI - 110001, INDIA.
(72)**Name of Inventor :**
**1)KALARICAL JANARDHANAN SREERAM**
**2)SRI PARASARA RADHIKA**
**3)BALACHANDRAN UNNI NAIR**

(57) Abstract :
The invention provides an inorganic blue colorant represented by formula A1,Co,Nd,O3 where x is an integer in the range of 0.8-2.0, y is an integer in the range of 0.05-0.15 and z is an integer in the range of 0.1-0.6 for industrial applications exhibiting Near Infra Red (NIR) reflectance of 70-80% and solar reflectance of 50-55%. It is essentially a rare earth metal ion based oxide colorant which has the potential to reflect the solar radiation near infrared wavelength region leading to potential application as a cool blue colorant for various surface coating applications. The colorant finds enormous application in coating of building roof, automobile parts, plastics, ceramics and leather as a potential replacement to phthalocyanine colorants.

No. of Pages : 19 No. of Claims : 9

(12) PATENT APPLICATION PUBLICATION
(19) INDIA
(22) Date of filing of Application :07/11/2014
(21) Application No.9390/DELNP/2014 A
(43) Publication Date : 17/07/2015

(54) Title of the invention : INDEXING TAB FOR GRID RUNNER

(51) International classification :E04B9/06,E04B9/24
(31) Priority Document No :13/451654
(32) Priority Date :20/04/2012
(33) Name of priority country :U.S.A.
(86) International Application No :PCT/US2013/035728
Filing Date :09/04/2013
(87) International Publication No :WO 2013/158404
(61) Patent of Addition to Application Number :NA
Filing Date :NA
(62) Divisional to Application Number :NA
Filing Date :NA

(71)**Name of Applicant :**
**1)USG INTERIORS LLC**
Address of Applicant :550 West Adams Street, Chicago, Illinois 60661 3676 U.S.A.
(72)**Name of Inventor :**
**1)LEHANE, James J. Jr.**
**2)LEAHY, Donald J.**
**3)FARLEY, Steven E.**
**4)ROWLAND, Thomas G.**
**5)GULBRANDSEN, Peder J.**

(57) Abstract :
A roll formed sheet metal grid runner, and method of its manufacture, for a suspended ceiling grid having indexing tabs stamped from a central web of the runner profile, the tabs being effective to reliably locate ceiling panels and, when the grid runner is nested with other identical runners in a package, avoid marring of visible surfaces.

No. of Pages : 13 No. of Claims : 4

(12) PATENT APPLICATION PUBLICATION
(19) INDIA
(22) Date of filing of Application :07/11/2014
(21) Application No.9391/DELNP/2014 A
(43) Publication Date : 17/07/2015

(54) Title of the invention : SILICONE TUBING AND METHOD FOR MAKING AND USING SAME

(51) International classification :F16L11/04,A61M1/00,B29D23/00
(31) Priority Document No :61/625998
(32) Priority Date :18/04/2012
(33) Name of priority country :U.S.A.
(86) International Application No :PCT/US2013/037244
Filing Date :18/04/2013
(87) International Publication No :WO 2013/158927
(61) Patent of Addition to Application Number :NA
Filing Date :NA
(62) Divisional to Application Number :NA
Filing Date :NA

(71)**Name of Applicant :**
**1)SAINT GOBAIN PERFORMANCE PLASTICS CORPORATION**
Address of Applicant :1199 South Chillicothe Road, Aurora, Ohio 44202 U.S.A.
(72)**Name of Inventor :**
**1)NADEAU, Adam Paul**
**2)CAHILL, Michael E.**
**3)TZIVANIS, Michael J.**
**4)MOHANTY, Ashok**

(57) Abstract :
Silicone tube structures are formed having a particular dimensional accuracy. In one embodiment a silicone tube structure can include an extruded hollow body having an inner bore. The extruded hollow body can have an inner diameter an outer diameter and a length of at least approximately 20 m. The extruded hollow body can also have a dimensional accuracy that is measured by the standard deviation of the inner diameter being no greater than approximately 0.8% of an average inner diameter of the extruded hollow body over the length. In an embodiment the silicone tube structure can be cut to form a number of silicone tubes.

No. of Pages : 50 No. of Claims : 46

(12) PATENT APPLICATION PUBLICATION
(19) INDIA
(22) Date of filing of Application :07/11/2014
(21) Application No.9392/DELNP/2014 A
(43) Publication Date : 17/07/2015

(54) Title of the invention : DISACCHARIDE SYNTHETIC LIPID COMPOUNDS AND USES THEREOF

(51) International classification :C07H3/04,A61K31/7016,A61K8/14
(31) Priority Document No :61/623393
(32) Priority Date :12/04/2012
(33) Name of priority country :U.S.A.
(86) International Application No :PCT/US2013/036425
Filing Date :12/04/2013
(87) International Publication No :WO 2013/155448
(61) Patent of Addition to Application Number :NA
Filing Date :NA
(62) Divisional to Application Number :NA
Filing Date :NA

(71)**Name of Applicant :**
**1)AVANTI POLAR LIPIDS, INC.**
Address of Applicant :700 Industrial Park Drive, Alabaster, Alabama 35007 U.S.A.
**2)AC IMMUNE SA**
(72)**Name of Inventor :**
**1)SHAW, Walter A.**
**2)BURGESS, Stephen W**
**3)LI, Shengrong**
**4)HICKMAN, David T**
**5)LOPEZ- DEBER, Maria Pilar**

(57) Abstract :
Essentially pure compounds of the formulas (I) to (XXV) are provided. Compositions and methods for enhancing or stimulating an immune response are also provided. The compounds provided are advantageous in that the compounds are essentially pure and free from contaminants encountered when such compounds are purified from natural sources.

No. of Pages : 101 No. of Claims : 30

(12) PATENT APPLICATION PUBLICATION
(19) INDIA
(22) Date of filing of Application :07/11/2014
(21) Application No.9393/DELNP/2014 A
(43) Publication Date : 17/07/2015

(54) Title of the invention : ACRYLIC RUBBER COMPOSITION AND CROSSLINKED PRODUCT THEREOF

(51) International classification :C08L33/04,C08L27/12
(31) Priority Document No :NA
(32) Priority Date :NA
(33) Name of priority country :NA
(86) International Application No :PCT/JP2012/059988
Filing Date :12/04/2012
(87) International Publication No :WO 2013/153649
(61) Patent of Addition to Application Number :NA
Filing Date :NA
(62) Divisional to Application Number :NA
Filing Date :NA

(71)**Name of Applicant :**
**1)ZEON CORPORATION**
Address of Applicant :6 -2 Marunouchi 1 -chome Chiyoda- ku, Tokyo 1008246 Japan
(72)**Name of Inventor :**
**1)NAITOU, Masatsugu**
**2)MOROOKA, Yoshihiro**
**3)TAKEDA, Koji**

(57) Abstract :
The purpose of the present invention is to provide an acrylic rubber composition of which the compression set resistance properties are further improved and to provide a crosslinked product of said acrylic rubber composition. The present invention is an acrylic rubber composition containing 0.4 to 50.0 mass% of a liquid fluorine rubber (a2) relative to 100 parts by mass of an acrylic rubber (a1) obtained by copolymerizing 0.1 to 10 mass% of a monomer containing a crosslinking group. The present invention is also a crosslinked product of said acrylic rubber composition.

No. of Pages : 34 No. of Claims : 4

(12) PATENT APPLICATION PUBLICATION
(21) Application No.9394/DELNP/2014 A
(19) INDIA
(22) Date of filing of Application :07/11/2014
(43) Publication Date : 17/07/2015

(54) Title of the invention : METHOD FOR PRODUCING SULFUR CONTAINING EPOXY COMPOUND

(51) International classification :C07D301/26,C07D303/34
(31) Priority Document No :2012093196
(32) Priority Date :16/04/2012
(33) Name of priority country :Japan
(86) International Application No :PCT/JP2013/061017
Filing Date :12/04/2013
(87) International Publication No :WO 2013/157490
(61) Patent of Addition to Application Number :NA
Filing Date :NA
(62) Divisional to Application Number :NA
Filing Date :NA

(71)**Name of Applicant :**
**1)MITSUBISHI GAS CHEMICAL COMPANY INC.**
Address of Applicant :MITSUBISHI Building 5 2 Marunouchi 2 chome Chiyoda ku Tokyo 1008324 Japan
(72)**Name of Inventor :**
**1)AOKI ,Takashi**
**2)HORIKOSHI ,Hiroshi**

(57) Abstract :
An object of the present invention is to provide a method for producing a sulfur containing epoxy compound producing no scum like insoluble matter. According to the present invention a sulfur containing halohydrins compound is dripped onto and reacted with a mixed solvent containing an organic solvent and a basic compound to provide the method for producing the sulfur containing epoxy compound. According to aspects of the present invention, the organic solvent is at least one type of compound selected from toluene and benzene, the basic compound is at least one type of compound selected from sodium hydroxide potassium hydroxide, and calcium hydroxide and the reaction temperature is between -5°C and 30°C.

No. of Pages : 21 No. of Claims : 5

(12) PATENT APPLICATION PUBLICATION
(21) Application No.883/DEL/2012 A
(19) INDIA
(22) Date of filing of Application :26/03/2012
(43) Publication Date : 17/07/2015

(54) Title of the invention : A METHOD FOR DIRECTIONAL CLONING OF PCR PRODUCTS

(51) International classification :C12N
(31) Priority Document No :NA
(32) Priority Date :NA
(33) Name of priority country :NA
(86) International Application No :NA
Filing Date :NA
(87) International Publication No : NA
(61) Patent of Addition to Application Number :NA
Filing Date :NA
(62) Divisional to Application Number :NA
Filing Date :NA

(71)**Name of Applicant :**
**1)Director General Defence Research and Development Organization**
Address of Applicant :Ministry of Defence Govt. of India Room No 348 B-Wing DRDO Bhawan Rajaji Marg New Delhi 110105 India
(72)**Name of Inventor :**
**1)KUDUMALA Prakash Narayana Reddy**
**2)RAMLAL Shylaja**
**3)MURALI Harishchandra Sripathy**
**4)BATRA Harsh Vardhan**
**5)AMARINDER SINGH BAWA**

(57) Abstract :
The present invention provides a cloning method for directional cloning of PCR fragments with preformed sticky ends. Said PCR fragments can then be directly cloned into a compatible pre-digested vector with corresponding restriction overhangs that are complimentary to the overhangs in the PCR product. The invention also provides for inframe fusion of PCR fragments from two or more distinct genes by generating PCR fragments with sticky ends ligating them and cloning the PCR product into a pre-digested vector.

No. of Pages : 23 No. of Claims : 8

(12) PATENT APPLICATION PUBLICATION
(21) Application No.9420/DELNP/2014 A
(19) INDIA
(22) Date of filing of Application :10/11/2014
(43) Publication Date : 17/07/2015

(54) Title of the invention : STRUCTURE FOR IMPROVING STRENGTH OF PLATE LIKE SECTION AND SUBSTANTIALLY CUBOID MEMBER

| | |
|---|---|
| (51) International classification | :H05K5/02,F02F7/00 |
| (31) Priority Document No | :2012116938 |
| (32) Priority Date | :22/05/2012 |
| (33) Name of priority country | :Japan |
| (86) International Application No | :PCT/JP2012/074444 |
| Filing Date | :24/09/2012 |
| (87) International Publication No | :WO 2013/175651 |
| (61) Patent of Addition to Application Number | :NA |
| Filing Date | :NA |
| (62) Divisional to Application Number | :NA |
| Filing Date | :NA |

(71)**Name of Applicant :**
**1)Asahi Kasei Chemicals Corporation**
Address of Applicant :1- 105, Kanda Jinbocho, Chiyoda- ku Tokyo 1018101 Japan
(72)**Name of Inventor :**
**1)INABA, Hideyuki**
**2)VU MANH, Cuong**

(57) Abstract :
A polygonal shape of a plate -like section has first and second symmetric axes that are substantially orthogonal to each other. The upper surface of the plate -like section has a protruded section (13), and the outline of the protruded section is line- symmetric with respect to the first and second symmetric axes. A convex short -side peak section (21A) that extends toward the polygonal outline in the direction of the first symmetric axis, concave corner side valley sections (22A,22B) that connect to respective ends of the short side peak section (21A), and convex long- side peak sections (23A , 23B) that connect to the respective corner -side valley sections (22A, 22B) and extend toward the polygonal outline are formed in a lateral half of the outline of the protruded section. At least a pair of lateral ribs (31A , 31B) or a pair of longitudinal ribs (32A , 32B), which extend across the protruded section and open up toward the polygonal outline, are formed either on the upper surface or on the lower surface of the protruded section. Thereby a structure that mechanically and effectively improves the strength of a substantially polygonal (four or more corners) plastic plate- like section is provided.

No. of Pages : 51 No. of Claims : 26

(12) PATENT APPLICATION PUBLICATION
(21) Application No.9421/DELNP/2014 A
(19) INDIA
(22) Date of filing of Application :10/11/2014
(43) Publication Date : 17/07/2015

(54) Title of the invention : METHODS FOR MEASURING POLYMERASE ACTIVITY USEFUL FOR SENSITIVE , QUANTITATIVE MEASUREMENTS OF ANY POLYMERASE EXTENSION ACTIVITY AND FOR DETERMINING THE PRESENCE OF VIABLE CELLS

(51) International classification :C12Q1/68
(31) Priority Document No :61/623114
(32) Priority Date :12/04/2012
(33) Name of priority country :U.S.A.
(86) International Application No :PCT/US2013/036264
Filing Date :12/04/2013
(87) International Publication No :WO 2013/155361
(61) Patent of Addition to Application Number :NA
Filing Date :NA
(62) Divisional to Application Number :NA
Filing Date :NA

(71)**Name of Applicant :**
**1)ZEUS SCIENTIFIC, INC.**
Address of Applicant :P.O. Box 38, Raritan, NJ 08869- 0038 U.S.A.
(72)**Name of Inventor :**
**1)O'HARA, Shawn, Mark**
**2)ZWEITZIG, Daniel**

(57) Abstract :
A novel, highly sensitive , quantitative and rapid DPE- PCR assay is disclosed that can be used to enumerate prokaryotic cells when presenting a purified or selected cell type and that has the capability to reproducibly measure DNA polymerase extension activity from less than 10 of bacteria via coupling to bead lysis. Also disclosed is the potential for the DPE- PCR assay of the invention to universally detect microbes by testing a panel of microorganisms comprised of gram negative bacteria gram positive bacteria, and species. Furthermore, it is disclosed that the DPE PCR assay of the invention can be used to assess bacterial cell viability, provided via the reproducibly strong correlation between DNA polymerase extension activity and proliferation as indicated by the presence of . It is believed that the disclosed assay of the invention can be a useful quantitative tool for a wide range of testing applications within pharmaceutical, environmental food and clinical settings.

No. of Pages : 39 No. of Claims : 12

(12) PATENT APPLICATION PUBLICATION
(21) Application No.9422/DELNP/2014 A
(19) INDIA
(22) Date of filing of Application :10/11/2014
(43) Publication Date : 17/07/2015

(54) Title of the invention : ROTOR BLADE FOR A WIND POWER PLANT

(51) International classification :F03D1/06
(31) Priority Document No :10 2012 206 109.6
(32) Priority Date :13/04/2012
(33) Name of priority country :Germany
(86) International Application No :PCT/EP2013/057262
Filing Date :05/04/2013
(87) International Publication No :WO 2013/153009
(61) Patent of Addition to Application Number :NA
Filing Date :NA
(62) Divisional to Application Number :NA
Filing Date :NA

(71)**Name of Applicant :**
**1)WOBBEN PROPERTIES GMBH**
Address of Applicant :Dreekamp 5, 26605 Aurich Germany
(72)**Name of Inventor :**
**1)BOHLEN, Thomas**

(57) Abstract :
The invention relates to a rotor blade (1) for a wind power plant, comprising a rotor blade root (4) for the connection of the rotor blade (1) to a rotor hub and a rotor blade tip arranged on the side facing away from the rotor blade root (4), as well as a wind power plant comprising such rotor blades. A relative profile thickness (2), which is defined as a ratio of profile thickness (2) to profile depth (3), has a local maximum in a centre region (6) between the rotor blade root and rotor blade tip.

No. of Pages : 22 No. of Claims : 9

(12) PATENT APPLICATION PUBLICATION
(19) INDIA
(22) Date of filing of Application :10/11/2014
(21) Application No.9414/DELNP/2014 A
(43) Publication Date : 17/07/2015

(54) Title of the invention : COMBINATION OF A NON STEROIDAL ANTI -INFLAMMATORY DRUG WITH AN ANTI-HISTAMINIC DRUG INTENDED FOR OPHTHALMIC USE

| | |
|---|---|
| (51) International classification | :A61K9/00,A61K31/407,A61K31/55 |
| (31) Priority Document No | :61/635506 |
| (32) Priority Date | :19/04/2012 |
| (33) Name of priority country | :U.S.A. |
| (86) International Application No | :PCT/US2013/037314 |
| Filing Date | :19/04/2013 |
| (87) International Publication No | :WO 2013/158961 |
| (61) Patent of Addition to Application Number | :NA |
| Filing Date | :NA |
| (62) Divisional to Application Number | :NA |
| Filing Date | :NA |

(71)**Name of Applicant :**
**1)ALLERGAN, INC.**
Address of Applicant :2525 Dupont Drive, Irvine, California 92612 U.S.A.
(72)**Name of Inventor :**
**1)RAJAN Kothanda Raman Thyaga**

(57) Abstract :
The present invention is directed to a stable formulation of a combination of ketorolac (non steroidal anti inflammatory drug) with olopatadine (anti- histaminic drug) intended for ophthalmic use. This pharmaceutical composition is used for treatment of ophthalmic diseases and conditions particularly seasonal ocular surface allergy.

No. of Pages : 28 No. of Claims : 15

(12) PATENT APPLICATION PUBLICATION
(19) INDIA
(22) Date of filing of Application :10/11/2014
(21) Application No.9415/DELNP/2014 A
(43) Publication Date : 17/07/2015

(54) Title of the invention : PROGRAMMABLE GAIN AMPLIFIER

(51) International classification :H03F3/45,H03G1/00,H03G3/00
(31) Priority Document No :61/645300
(32) Priority Date :10/05/2012
(33) Name of priority country :U.S.A.
(86) International Application No:PCT/US2013/039948
Filing Date :07/05/2013
(87) International Publication No :WO 2013/169777
(61) Patent of Addition to Application Number :NA
Filing Date :NA
(62) Divisional to Application Number :NA
Filing Date :NA

(71)**Name of Applicant :**
**1)THAT CORPORATION**
Address of Applicant :45 Summer Street, Milford, Massachusetts 01757 -1656 U.S.A.
(72)**Name of Inventor :**
**1)HEBERT, Gary K.**

(57) Abstract :
An integrated circuit (IC) includes a programmable gain amplifier. The programmable gain amplifier comprises a first- stage amplifier configured to operate with at least one relatively high power supply voltage in order to accommodate at the input of the first- stage amplifier a relatively large range of input signals, the first- stage amplifier having a gain setting that is adjustable from a set of predetermined gain settings separated in relatively coarse increments so as to minimize the number of analog switches that must be implemented with high- voltage active devices in order to set each gain setting. The programmable gain amplifier also includes a second stage amplifier configured to operate with at least one relatively low power supply voltage lower than the high power supply voltage in order to minimize the required IC area for the second -stage amplifier- wherein the gain of the second- stage amplifier is adjustable from a set of gain settings separated in relatively small increments between the coarse increments in order to achieve a combined predetermined gain resolution. The gain of the programmable gain amplifier is programmable by adjusting the gain of each of the first- stage and second- stage amplifiers.

No. of Pages : 29 No. of Claims : 21

(12) PATENT APPLICATION PUBLICATION
(19) INDIA
(22) Date of filing of Application :10/11/2014
(21) Application No.9416/DELNP/2014 A
(43) Publication Date : 17/07/2015

(54) Title of the invention : CRYSTALLINE MICROSPHERES AND THE PROCESS FOR MANUFACTURING THE SAME

(51) International classification :A61K9/14
(31) Priority Document No :61/638073
(32) Priority Date :25/04/2012
(33) Name of priority country :U.S.A.
(86) International Application No :PCT/US2013/038257
Filing Date :25/04/2013
(87) International Publication No :WO 2013/163453
(61) Patent of Addition to Application Number :NA
Filing Date :NA
(62) Divisional to Application Number :NA
Filing Date :NA

(71)**Name of Applicant :**
**1)SPI PHARMA, INC.**
Address of Applicant :503 Carr Road, Suite 210 Wilmington, DE 19809 U.S.A.
(72)**Name of Inventor :**
**1)PROPST, Cecil W.**
**2)MEADOWS, Marc, W.**
**3)TODD, Michael, S.**

(57) Abstract :
The present invention relates to microspheres and compositions comprising a plurality of microspheres, wherein the microspheres are perfectly spherical and have a moisture content less than 1% and the method of manufacturing the same. The present invention is useful in the manufacture of sustained and modified release active pharmaceutical ingredient (API) microspheres, as a free flowing excipient for mini -tablets and in the manufacture of API dispersions.

No. of Pages : 95 No. of Claims : 29

(12) PATENT APPLICATION PUBLICATION
(19) INDIA
(22) Date of filing of Application :10/11/2014
(21) Application No.9417/DELNP/2014 A
(43) Publication Date : 17/07/2015

(54) Title of the invention : MULTI -SPECIFIC MONOCLONAL ANTIBODIES

(51) International classification :C07K16/46,C07K16/18,G01N33/53
(31) Priority Document No :61/645302
(32) Priority Date :10/05/2012
(33) Name of priority country :U.S.A.
(86) International Application No :PCT/US2013/040575
Filing Date :10/05/2013
(87) International Publication No :WO 2013/170168
(61) Patent of Addition to Application Number :NA
Filing Date :NA
(62) Divisional to Application Number :NA
Filing Date :NA

(71)**Name of Applicant :**
**1)BIOATLA LLC**
Address of Applicant :11011 Torreyana Road, San Diego, CA 92121 U.S.A.
(72)**Name of Inventor :**
**1)FREY, Gerhard**
**2)CHANG, Hwai, Wen**
**3)SHORT, Jay, M.**

(57) Abstract :
The present invention is relevant to the generation of multi- specific antibodies, antibodies that are distinguished by their ability to bind to multiple antigens with specificity and with affinity. In particular, the present invention is related to bi -specific antibodies.

No. of Pages : 59 No. of Claims : 23

(12) PATENT APPLICATION PUBLICATION
(19) INDIA
(22) Date of filing of Application :10/11/2014
(21) Application No.9418/DELNP/2014 A
(43) Publication Date : 17/07/2015

(54) Title of the invention : CONJUGATE OF A PHOTOSENSITISER AND CHITOSAN AND USES THEREOF

(51) International classification :A61K41/00,A61K47/48,A61P35/00
(31) Priority Document No :1208548.6
(32) Priority Date :15/05/2012
(33) Name of priority country :U.K.
(86) International Application No :PCT/EP2013/059968
Filing Date :14/05/2013
(87) International Publication No :WO 2013/189663
(61) Patent of Addition to Application Number :NA
Filing Date :NA
(62) Divisional to Application Number :NA
Filing Date :NA

(71)**Name of Applicant :**
**1)PCI BIOTECH AS**
Address of Applicant :Strandveien 55, N- 1366 Lysaker Norway
(72)**Name of Inventor :**
**1)BERG, Kristian**
**2)H˜GSET, Anders**
**3)M • SSON, M¡r**
**4)GAWARE, Vivek S.**

(57) Abstract :
The present invention relates to novel chitosan based conjugates, e.g. nanocarriers, comprising a derivative of the biocompatible polymer chitosan conjugated to a photosensitising agent, and uses thereof in photochemical internalisation (PCI) and photodynamic therapy (PDT). The invention also relates to the use of the novel conjugates of the invention in treatment or prevention of diseases, particularly cancer, and for vaccination purposes.

No. of Pages : 131 No. of Claims : 24

(12) PATENT APPLICATION PUBLICATION
(19) INDIA
(22) Date of filing of Application :07/11/2014
(21) Application No.9400/DELNP/2014 A
(43) Publication Date : 17/07/2015

(54) Title of the invention : PROCESS FOR MAKING HIGH VI LUBRICATING OILS

(51) International classification :C10G65/12,C10G1/10
(31) Priority Document No :13/467567
(32) Priority Date :09/05/2012
(33) Name of priority country :U.S.A.
(86) International Application No :PCT/US2013/031428
Filing Date :14/03/2013
(87) International Publication No :WO 2013/169367
(61) Patent of Addition to Application Number :NA
Filing Date :NA
(62) Divisional to Application Number :NA
Filing Date :NA

(71)**Name of Applicant :**
**1)CHEVRON U.S.A. INC.**
Address of Applicant :6001 Bollinger Canyon Road, San Ramon, California 94583 U.S.A.
(72)**Name of Inventor :**
**1)MILLER, Stephen Joseph**

(57) Abstract :
A process for making a high VI lubricating base oil from a blend of (1) a heavy wax derived from pyrolyzing a plastic feed and (2) a lube oil feedstock is disclosed. The process comprises the steps of hydrocracking the blend and dewaxing at least a portion of the hydrocracked stream under hydroisomerization conditions to produce a lubricating base oil.

No. of Pages : 15 No. of Claims : 15

(12) PATENT APPLICATION PUBLICATION
(19) INDIA
(22) Date of filing of Application :07/11/2014
(21) Application No.9401/DELNP/2014 A
(43) Publication Date : 17/07/2015

(54) Title of the invention : COUPLING OF SHAFTS USING VARIABLE PROFILE SPLINES

(51) International classification :F01D5/02,F16D1/10
(31) Priority Document No :1253432
(32) Priority Date :13/04/2012
(33) Name of priority country :France
(86) International Application No :PCT/FR2013/050795
Filing Date :12/04/2013
(87) International Publication No :WO 2013/153339
(61) Patent of Addition to Application Number :NA
Filing Date :NA
(62) Divisional to Application Number :NA
Filing Date :NA

(71)**Name of Applicant :**
**1)SNECMA**
Address of Applicant :2 Boulevard du Gnral Martial Valin, F - 75015 Paris France
(72)**Name of Inventor :**
**1)BOIS, Stphane**
**2)PATIN, Guillaume**

(57) Abstract :
The invention relates to a device for coupling shafts, comprising a coupling part intended to be fitted concentrically into a complementary coupling part said coupling part, comprising two centring zones between which a plurality of splines extend, in which device the splines have a profile which is constant along a median zone, of the coupling part and which in a zone running in the continuation of said median zone, has a smaller thickness by comparison with that in the same spline in the median zone and in which device the splines of said coupling part continue, beyond the zone in which they have a smaller thickness as far as the centring zone which is on the same side of the median zone as said first zone said splines and the spline bottoms, having, in the coupling zone, a profile that continuously couples said splines and the spline bottom to the surface of said centring zone. The invention also relates to a shaft and to a turbo machine comprising such a coupling device.

No. of Pages : 24 No. of Claims : 12

(12) PATENT APPLICATION PUBLICATION
(19) INDIA
(22) Date of filing of Application :08/11/2014
(21) Application No.9402/DELNP/2014 A
(43) Publication Date : 17/07/2015

(54) Title of the invention : OFFSHORE AQUACULTURE SYSTEM

(51) International classification :A01K61/00
(31) Priority Document No :1207999.2
(32) Priority Date :08/05/2012
(33) Name of priority country :U.K.
(86) International Application No :PCT/IL2013/050381
Filing Date :06/05/2013
(87) International Publication No :WO 2013/168147
(61) Patent of Addition to Application Number :NA
Filing Date :NA
(62) Divisional to Application Number :NA
Filing Date :NA

(71)**Name of Applicant :**
**1)SEA CONTROL HOLDINGS LTD.**
Address of Applicant :4 Hagidonim Street, 3094104 Zikhron Yaakov Israel
(72)**Name of Inventor :**
**1)BROSH, Shay**

(57) Abstract :
An offshore aquaculture system based on a semisubmersible platform having storage and maintenance facilities for supporting aquaculture with an attached framework to which net covered rigid aquaculture cages are movably connected and controllably positioned according to sea conditions. The cages may be sunk or raised to protect the aquaculture products, and all maintenance and feeding is carried out by crew onboard the platform.

No. of Pages : 18 No. of Claims : 16

(12) PATENT APPLICATION PUBLICATION
(19) INDIA
(22) Date of filing of Application :08/11/2014
(21) Application No.9403/DELNP/2014 A
(43) Publication Date : 17/07/2015

(54) Title of the invention : CONGESTION CONTROL IN PACKET DATA NETWORKING

(51) International classification :H04L12/24,H04L12/815,H04L12/891
(31) Priority Document No :13/464182
(32) Priority Date :04/05/2012
(33) Name of priority country :U.S.A.
(86) International Application No :PCT/IB2013/053504
Filing Date :02/05/2013
(87) International Publication No :WO 2013/164795
(61) Patent of Addition to Application Number :NA
Filing Date :NA
(62) Divisional to Application Number :NA
Filing Date :NA

(71)**Name of Applicant :**
**1)TELEFONAKTIEBOLAGET L M ERICSSON (PUBL)**
Address of Applicant :S- 164 83 Stockholm Sweden
(72)**Name of Inventor :**
**1)BEHESHTI- ZAVAREH, Neda**
**2)ZHANG, Ying**

(57) Abstract :
A network element controls congestion in a link of a packet data network. A congested link is identified and a throttle rate is determined for one or more of the traffic groups traversing the congested link. The central controller determines the throttle rates using a weight of the group and the current traffic rate of the group through the link. The throttle rates are sent to switches to throttle traffic for each affected group.

No. of Pages : 31 No. of Claims : 20

(12) PATENT APPLICATION PUBLICATION
(21) Application No.9404/DELNP/2014 A
(19) INDIA
(22) Date of filing of Application :08/11/2014
(43) Publication Date : 17/07/2015

(54) Title of the invention : FREE SPACE POINTING DEVICES WITH TILT COMPENSATION AND IMPROVED USABILITY

(51) International classification :G09G5/08
(31) Priority Document No :60/566,444
(32) Priority Date :30/04/2004
(33) Name of priority country :U.S.A.
(86) International Application No :PCT/US2005/015096
Filing Date :02/05/2005
(87) International Publication No :WO 2005/108119
(61) Patent of Addition to Application Number :NA
Filing Date :NA
(62) Divisional to Application Number :6379/DELNP/2006
Filed on :30/10/2006

(71)**Name of Applicant :**
**1)Hillcrest Laboratories, Inc.**
Address of Applicant :15245 Shady Grove Road, Rockville, MD 20850, U.S.A.
(72)**Name of Inventor :**
**1)LIBERTY, Matthew, G.**

(57) Abstract :
Systems and methods according to the present invention describe free space pointing devices (400) which enhance usability by transforming sensed motion data from a first frame of reference (e.g., the body of the free space pointing device (400)) into a second frame of reference (e.g., a user™s frame of reference). One exemplary embodiment of the present invention removes effects associated with a tilt orientation in which the free space pointing device (400) is held by a user.

No. of Pages : 54 No. of Claims : 10

(12) PATENT APPLICATION PUBLICATION
(19) INDIA
(22) Date of filing of Application :08/11/2014
(21) Application No.9405/DELNP/2014 A
(43) Publication Date : 17/07/2015

(54) Title of the invention : SYSTEMS AND METHODS OF MEMBRANE SEPARATION

(51) International classification :B01D63/10,B01D61/14
(31) Priority Document No :61/623088
(32) Priority Date :12/04/2012
(33) Name of priority country :U.S.A.
(86) International Application No :PCT/US2013/032456
Filing Date :15/03/2013
(87) International Publication No :WO 2013/154777
(61) Patent of Addition to Application Number :NA
Filing Date :NA
(62) Divisional to Application Number :NA
Filing Date :NA

(71)**Name of Applicant :**
**1)DXV WATER TECHNOLOGIES, LLC**
Address of Applicant :P.O. Box 647, Orange, CA 92856 U.S.A.
(72)**Name of Inventor :**
**1)MOTHERWAY, Michael, Sean**
**2)VUONG, Diem, Xuan**
**3)ROTH, Curtis**

(57) Abstract :
Water treatment systems and methods are provided to minimize membrane fouling and the required maintenance that results therefrom. A water treatment system includes a pressure vessel with a plurality of spaced -apart membranes circularly disposed therein, and an impeller or other means for circulating feed water through the interior of the vessel and past the membranes. Antifouling particles (such as diatomaceous earth or activated carbon) and/or pellets can be added to the feed water inhibit membrane fouling and extend the useful life of the membranes. A feed spacer element having a window- pane pattern can be disposed between adjacent membrane leaves to reduce membrane fouling.

No. of Pages : 73 No. of Claims : 35

(12) PATENT APPLICATION PUBLICATION
(19) INDIA
(22) Date of filing of Application :15/01/2014
(21) Application No.107/DEL/2014 A
(43) Publication Date : 17/07/2015

(54) Title of the invention : SMART HELMET

(51) International classification :A42B
(31) Priority Document No :NA
(32) Priority Date :NA
(33) Name of priority country :NA
(86) International Application No :NA
Filing Date :NA
(87) International Publication No : NA
(61) Patent of Addition to Application Number :NA
Filing Date :NA
(62) Divisional to Application Number :NA
Filing Date :NA

(71)**Name of Applicant :**
**1)TANVEER ALI KHAN**
Address of Applicant :86, BASANT VIHAR, IZZATNAGAR, BAREILLY. Uttar Pradesh India
(72)**Name of Inventor :**
**1)TANVEER ALI KHAN**
**2)SHAHZAIB ALI**
**3)NAZIM KHAN**

(57) Abstract :
This helmet is quite useful in reducing the death rate in the accidents as it makes the helmet compulsory for every rider through its effective features. This method is simple and economic and can be implemented in all the helmets without much modification in the previous designs of the helmets.

No. of Pages : 8 No. of Claims : 5

(12) PATENT APPLICATION PUBLICATION
(19) INDIA
(22) Date of filing of Application :07/11/2014
(21) Application No.3228/DEL/2014 A
(43) Publication Date : 17/07/2015

(54) Title of the invention : AXIAL TURBINE

(51) International classification :f02g
(31) Priority Document No :2013-232039
(32) Priority Date :08/11/2013
(33) Name of priority country :Japan
(86) International Application No :NA
Filing Date :NA
(87) International Publication No : NA
(61) Patent of Addition to Application Number :NA
Filing Date :NA
(62) Divisional to Application Number :NA
Filing Date :NA

(71)**Name of Applicant :**
**1)MITSUBISHI HITACHI POWER SYSTEMS, LTD.**
Address of Applicant :3-1, Minatomirai 3-chome, Nishi-ku, Yokohama, Kanagawa 220-8401, Japan
(72)**Name of Inventor :**
**1)FUKUSHIMA Hisataka**
**2)SHIBATA Takanori**
**3)SEGAWA Kiyoshi**
**4)LEE Goingwon**

(57) Abstract :
An axial turbine includes a plurality of ribs provided in such a way as to be sandwiched between the diaphragm outer ring and the axial seal fin in the gap between the shroud and the diaphragm outer ring, the ribs being extended from the diaphragm outer ring toward the shroud in the radial direction of the rotor and in the direction of the rotation axis thereof, and a guide plate provided in such a way as to be present along the axial seal fin and a face of the diaphragm outer ring, opposed to the rotor, so as to be extended in the rotation radial direction of the rotor.

No. of Pages : 38 No. of Claims : 10

(12) PATENT APPLICATION PUBLICATION
(19) INDIA
(22) Date of filing of Application :07/11/2014
(21) Application No.3229/DEL/2014 A
(43) Publication Date : 17/07/2015

(54) Title of the invention : METAL PULLEY WITH NONMAGNETIC INSERT

(51) International classification :f16h
(31) Priority Document No :14/135,280
(32) Priority Date :19/12/2013
(33) Name of priority country :U.S.A.
(86) International Application No :NA
Filing Date :NA
(87) International Publication No : NA
(61) Patent of Addition to Application Number :NA
Filing Date :NA
(62) Divisional to Application Number :NA
Filing Date :NA

(71)**Name of Applicant :**
**1)BORGWARNER INC.**
Address of Applicant :3850 Hamlin Road, Auburn Hills, MI 48326-2872 (US) U.S.A.
(72)**Name of Inventor :**
**1)QIN, Shiwei**
**2)IGNATOVICH, James**

(57) Abstract :
A pulley member, particularly for an electromagnetically controlled friction clutch in an accessory drive assembly. The pulley member has two mating metal cup members bonded together with a central hub member. Through-hole slots or openings are provided in each of the cup members to provide a break in magnetic flux. A non-magnetic insert member is positioned between the cup members covering the through-holes and sealing them from contamination from environmental factors. The pulley member can be used with vehicle engine accessories such as water pumps and cooling fans.

No. of Pages : 28 No. of Claims : 15

(12) PATENT APPLICATION PUBLICATION
(21) Application No.9431/DELNP/2014 A
(19) INDIA
(22) Date of filing of Application :10/11/2014
(43) Publication Date : 17/07/2015

(54) Title of the invention : DEVICE FOR ATTACHMENT OF REPLACEABLE WEARING PART

(51) International classification :A01B23/02,E02F9/28
(31) Priority Document No :20120603
(32) Priority Date :23/05/2012
(33) Name of priority country :Norway
(86) International Application No :PCT/NO2013/050089
Filing Date :21/05/2013
(87) International Publication No :WO 2013/176551
(61) Patent of Addition to Application Number :NA
Filing Date :NA
(62) Divisional to Application Number :NA
Filing Date :NA

(71)**Name of Applicant :**
**1)KVERNELAND GROUP OPERATIONS NORWAY AS**
Address of Applicant :Kverneland Klepp, N -4355 Kvernaland Norway
(72)**Name of Inventor :**
**1)SKJ†VELAND Magne**

(57) Abstract :
A device for the attachment of a replaceable wearing part (4) to be attached at a leading edge (22) of an implement (1) is described, wherein, at the leading edge (22), a supporting surface (21) is formed which is arranged to receive and fix a wearing- part holder (3), one of the wearing part holder (3) and the wearing- part (4) forming an attachment projection (31) and the other of the wearing part holder (3) and the wearing part (4) forming a corresponding socket (43) the attachment projection (31) and the socket (43,) being provided with corresponding- cooperating guide portions (32, 431) the guide portions (32) of the wearing part holder (3) being formed as guide faces (32a, 32c, 32e) facing the supporting surface (21) and being slanted relative to the supporting surfaces (21), falling in a direction away from the leading edge (22).

No. of Pages : 14 No. of Claims : 6

(12) PATENT APPLICATION PUBLICATION
(19) INDIA
(22) Date of filing of Application :10/11/2014
(21) Application No.9432/DELNP/2014 A
(43) Publication Date : 17/07/2015

(54) Title of the invention : ADHESIVE COMPOSITIONS CONTAINING GRAPHENIC CARBON PARTICLES

(51) International classification :C09J11/04
(31) Priority Document No :13/463105
(32) Priority Date :03/05/2012
(33) Name of priority country :U.S.A.
(86) International Application No :PCT/US2013/039509
Filing Date :03/05/2013
(87) International Publication No :WO 2013/166414
(61) Patent of Addition to Application Number :NA
Filing Date :NA
(62) Divisional to Application Number :NA
Filing Date :NA

(71)**Name of Applicant :**
**1)PPG INDUSTRIES OHIO, INC.**
Address of Applicant :3800 West 143rd Street, Cleveland, Ohio 44111 U.S.A.
(72)**Name of Inventor :**
**1)ASAY David B.**
**2)CHAO, Tien- Chieh**
**3)DESAI, Umesh C.**
**4)HUNG ,Cheng- Hung**
**5)NAKAJIMA, Masayuki**
**6)VANIER, Noel R,.**

(57) Abstract :
Disclosed herein are adhesive compositions comprising (a) a first component; (b) a second component that chemically reacts with said first component; and (c) graphenic carbon particles having a compressed density of 0.9 or less. Disclosed herein are associated methods for forming the adhesive compositions and applying the adhesive compositions to a substrate to form a bonded substrate.

No. of Pages : 44 No. of Claims : 22

(12) PATENT APPLICATION PUBLICATION
(21) Application No.9433/DELNP/2014 A
(19) INDIA
(22) Date of filing of Application :10/11/2014
(43) Publication Date : 17/07/2015

(54) Title of the invention : NEEDLE EQUIPPED CONNECTING MEMBER AND DRUG DISSOLUTION KIT

(51) International classification :A61J1/05,A61J1/10,A61J3/00
(31) Priority Document No :2012113517
(32) Priority Date :17/05/2012
(33) Name of priority country :Japan
(86) International Application No :PCT/JP2013/063788
Filing Date :17/05/2013
(87) International Publication No :WO 2013/172449
(61) Patent of Addition to Application Number :NA
Filing Date :NA
(62) Divisional to Application Number :NA
Filing Date :NA

(71)**Name of Applicant :**
**1)AJINOMOTO CO. INC.**
Address of Applicant :15- 1, Kyobashi 1 -Chome, Chuo- ku, Tokyo 1048315 Japan
(72)**Name of Inventor :**
**1)IWAHORI Hiroya**

(57) Abstract :
Provided is a needle equipped connecting member (1), and a drug dissolution kit (35) using same comprising a member body (3) on which a hollow needle (2) is erected, and an elastic sheath (4) for covering the hollow needle (2), and having a drug solution container connection section (12) which is disposed on a side opposite the side of the member body (3) where the hollow needle (2) is erected and which can be connected to a drug solution container (22). The needle equipped connecting member (1) is characterized in that the elastic sheath (4) covers the hollow needle (2) in a state of close contact so as to allow at least an outer surface thereof to be removed. According to the present invention, during use as the drug dissolution kit (35) a sterilization process can be easily carried out.

No. of Pages : 52 No. of Claims : 14

(12) PATENT APPLICATION PUBLICATION
(21) Application No.2545/DELNP/2012 A
(19) INDIA
(22) Date of filing of Application :23/03/2012
(43) Publication Date : 17/07/2015

(54) Title of the invention : PHOSPORUS COMPOUNDS OF FORMULA IIIA2

(51) International classification :C07F 9/40
(31) Priority Document No :03029730.3
(32) Priority Date :23/12/2003
(33) Name of priority country :EUROPEAN UNION
(86) International Application No :PCT/EP2004/014590
Filing Date :22/12/2004
(87) International Publication No :WO 2005/063780
(61) Patent of Addition to Application Number :NA
Filing Date :NA
(62) Divisional to Application Number :3604/DELNP/2006
Filed on :22/06/2006

(71)**Name of Applicant :**
**1)DOW AGROSCIENCES LLC**
Address of Applicant :9330 ZIONSVILLE ROAD, INDIANAPOLIS, IN 46268-1054, UNITED STATES OF AMERICA
(72)**Name of Inventor :**
**1)JOACHIM GEBHARDT**
**2)NORBERT GOTZ**
**3)HAGEN JAEDICKE**
**4)GULDO MAYER**
**5)RACK MICHAEL**

(57) Abstract :
Phosporus compounds of formula IIIa2 in which R = is equal or different independently means C1-20 alkyl, branched or straight or cyclic, or C6-20 aryl EnR6m = in which if n = m = 1 than E = S and R6 = C1-20-alkyl (branched or straight chain or cyclic); C6-20-aryl - which each of those may be substituted with one or more of the following groups: F, CI, Br, I, C1-20-alkoxy, C6-20-aryloxy, amino; F; CI; Br; I; Y = - CN; -C(O)NH2;-C(O)OR7 with R7= C1-20-alkyl (branched or straight chain or cyclic); C6-20-aryl - which each of those may be substituted with one or more of the following groups: F, CI, Br, I, C1-20-alkoxy, C6-20-aryloxy, amino; F; CI; Br; I.

No. of Pages : 19 No. of Claims : 1

(12) PATENT APPLICATION PUBLICATION
(21) Application No.3239/DEL/2014 A
(19) INDIA
(22) Date of filing of Application :10/11/2014
(43) Publication Date : 17/07/2015

(54) Title of the invention : GRANULATED COMPOSITE, RAPID RELEASE TABLET AND METHOD FOR PRODUCING SAME

| | |
|---|---|
| (51) International classification | :A61K 9/00 |
| (31) Priority Document No | :2013-237000 |
| (32) Priority Date | :15/11/2013 |
| (33) Name of priority country | :Japan |
| (86) International Application No | :NA |
| Filing Date | :NA |
| (87) International Publication No | : NA |
| (61) Patent of Addition to Application Number | :NA |
| Filing Date | :NA |
| (62) Divisional to Application Number | :NA |
| Filing Date | :NA |

(71)**Name of Applicant :**
**1)SHIN-ETSU CHEMICAL CO., LTD.**
Address of Applicant :6-1, Otemachi 2-chome, Chiyoda-ku, Tokyo, JAPAN
(72)**Name of Inventor :**
**1)HIRAMA, Yasuyuki**
**2)MARUYAMA, Naosuke**

(57) Abstract :
Provided is a rapid release tablet excellent in binding capability and disintegrability and also excellent in storage stability and the like. More specifically, provided are a granulated composite comprising low-substituted hydroxypropyl cellulose having a degree of hydroxypropoxy substitution of from 5 to 16% by weight and D-mannitol, wherein the D-mannitol contains 0.9% by weight or less of D-sorbitol; a rapid release tablet comprising the granulated composite and a drug; and a method for producing a granulated composite comprising the steps of: mixing low-substituted hydroxypropyl cellulose having a degree of hydroxypropoxy substitution of from 5 to 16% by weight, first D-mannitol, and water to obtain an aqueous dispersion, and granulating while adding the aqueous dispersion to second D-mannitol, wherein the first D-mannitol and the second D-mannitol contain 0.9% by weight or less of D-sorbitol in total.

No. of Pages : 30 No. of Claims : 6

(12) PATENT APPLICATION PUBLICATION
(19) INDIA
(22) Date of filing of Application :08/01/2015
(21) Application No.69/DEL/2015 A
(43) Publication Date : 17/07/2015

(54) Title of the invention : PORTABLE COMPOUND BATTERY SYSTEM

(51) International classification :G01R31/36
(31) Priority Document No :103100869
(32) Priority Date :09/01/2014
(33) Name of priority country :Taiwan
(86) International Application No :NA
Filing Date :NA
(87) International Publication No : NA
(61) Patent of Addition to Application Number :NA
Filing Date :NA
(62) Divisional to Application Number :NA
Filing Date :NA

(71)**Name of Applicant :**
**1)FARADAY MOTOR CORPORATION**
Address of Applicant :6F., No. 9, Sec. 2, Beitou Rd., Beitou Dist., Taipei City, Taiwan, Republic of China,
(72)**Name of Inventor :**
**1)BIN-YEN MA**

(57) Abstract :
A portable compound battery system comprises at least one or more portable high energy battery sets, a load information center, a fixed high power battery set and a variable output power compound battery management module, wherein the portable high energy battery sets convert the output voltage by means of the variable output power compound battery management module including a variable output power DCJDC converter and then parallel with the fixed high power batteiy set. The system according to the present invention can determine the output power based on load requirements and overall battery system conditions so as to appropriately provide the electric energy that the load needs or replenish electric energy of the high power battery set. In addition, the portable high energy battery sets according to the present invention enable features in convenience and compactness, so it is possible to recharge using a battery recharger anytime and anywhere.

No. of Pages : 22 No. of Claims : 9

(12) PATENT APPLICATION PUBLICATION
(19) INDIA
(22) Date of filing of Application :11/11/2014
(21) Application No.9455/DELNP/2014 A
(43) Publication Date : 17/07/2015

(54) Title of the invention : RADIANCE COMPOSITIONS AND METHODS OF USE

(51) International classification :A61K8/18,A61Q1/00
(31) Priority Document No :NA
(32) Priority Date :NA
(33) Name of priority country :NA
(86) International Application No :PCT/CN2012/075439
Filing Date :14/05/2012
(87) International Publication No :WO 2013/170416
(61) Patent of Addition to Application Number :NA
Filing Date :NA
(62) Divisional to Application Number :NA
Filing Date :NA

(71)**Name of Applicant :**
**1)JOHNSON & JOHNSON CONSUMER COMPANIES INC.**
Address of Applicant :199 Grandview Road, Skillman, New Jersey 08558 9418 U.S.A.
(72)**Name of Inventor :**
**1)HUANG, Samuel**
**2)ZENG, Lydia**
**3)GU, Amigo**
**4)ZHANG, Linda**
**5)WU, Jiang**

(57) Abstract :
Provided are compositions comprising a gloss agent having a refractive index of 1.4 or greater, an emollient film facilitator having a viscosity of 300 c Ps or greater, and a film -forming polymer , wherein the composition comprises a greater amount, on a weight percent basis, of emollient film facilitator than gloss agent. Also provided are methods of providing radiance to the skin by applying to the skin a composition of the present invention.

No. of Pages : 24 No. of Claims : 20

(12) PATENT APPLICATION PUBLICATION
(21) Application No.12/DEL/2015 A
(19) INDIA
(22) Date of filing of Application :02/01/2015
(43) Publication Date : 17/07/2015

(54) Title of the invention : CARBURETOR AIR VENT TUBE PIPING STRUCTURE FOR SADDLE RIDING TYPE VEHICLE

(51) International classification :F02B1/00
(31) Priority Document No :2014-003851
(32) Priority Date :14/01/2014
(33) Name of priority country :Japan
(86) International Application No :NA
Filing Date :NA
(87) International Publication No : NA
(61) Patent of Addition to Application Number :NA
Filing Date :NA
(62) Divisional to Application Number :NA
Filing Date :NA

(71)**Name of Applicant :**
**1)HONDA MOTOR CO., LTD.**
Address of Applicant :1-1, Minami-Aoyama 2-chome, Minato-ku, Tokyo 107-8556, Japan,
(72)**Name of Inventor :**
**1)NOBUYUKI SHIMOMURA**

(57) Abstract :
A carburetor air vent tube piping structure for a I saddle ,riding type vehicle, the saddle riding type vehicle 1 having an internal combustion engine 3 and an air cleaner case 7 arranged longitudinally be1ow.a fuel tank 16, and having an intake air passage formed by an upstream side intake pipe 62 and a downstream side intake pipe 61 with a carburetor 5 interposed between the upstream side intake pipe 62and the downstream side .intake pipe 61, wherein a detouring portion top portion 80 of an air vent tube 8 connected to a side portion of one of a left and a right of the carburetor 5, the air vent tube 8 detouring above,the upstream side intake pipe. 62 and extending to a side of the other of the left and the right of the carburetor 5, is supported at a higher 42 position than an upper portion of the upstream side intake pipe 62 by a supporting rib 71 provided to the air cleaner case 7,upstream of the carburetor 5.

No. of Pages : 52 No. of Claims : 6

(12) PATENT APPLICATION PUBLICATION
(21) Application No.120/DEL/2014 A
(19) INDIA
(22) Date of filing of Application :15/01/2014
(43) Publication Date : 17/07/2015

(54) Title of the invention : MAINTENANCE END POINT DISCOVERY

(51) International classification :H04L
(31) Priority Document No :NA
(32) Priority Date :NA
(33) Name of priority country :NA
(86) International Application No :NA
Filing Date :NA
(87) International Publication No : NA
(61) Patent of Addition to Application Number :NA
Filing Date :NA
(62) Divisional to Application Number :NA
Filing Date :NA

(71)**Name of Applicant :**
**1)ALCATEL LUCENT**
Address of Applicant :3, avenue Octave Grard, 75007 Paris France
(72)**Name of Inventor :**
**1)PADMANABHAN, Sowrirajan**
**2)RAJAMANICKAM, Thirumurthy**

(57) Abstract :
Method for discovering MEPs in a communication network for CFM comprises a first MEP (106) generating a loopback message having a MAID corresponding to a MA to which the first MEP (106-1) belongs. The first MEP (106-1) multicasts the loopback message to one or more other MEPs (106) registered with a MD level with which the first MEP (106-1) is registered. The first MEP (106-1) receives a LBR message from at least one other MEP (106-2) from among the one or more other MEPs (106). The at least one other MEP (106-2) has same MAID as the first MEP (106-1). The first MEP (106-1) determines that the at least one other MEP (106-2) belongs to same maintenance association to which the first MEP (106-1) belongs. The at least one other MEP (106-2) is ascertained as a remote MEP with which the first MEP (106-1) exchanges CFM messages for CFM.

No. of Pages : 28 No. of Claims : 15

(12) PATENT APPLICATION PUBLICATION
(21) Application No.54/DEL/2015 A
(19) INDIA
(22) Date of filing of Application :07/01/2015
(43) Publication Date : 17/07/2015

(54) Title of the invention : COMMUTATOR AND METHOD FOR MANUFACTURING THE SAME

| | |
|---|---|
| (51) International classification | :H01R43/08 |
| (31) Priority Document No | :2014-004040 |
| (32) Priority Date | :14/01/2014 |
| (33) Name of priority country | :Japan |
| (86) International Application No | :NA |
| Filing Date | :NA |
| (87) International Publication No | : NA |
| (61) Patent of Addition to Application Number | :NA |
| Filing Date | :NA |
| (62) Divisional to Application Number | :NA |
| Filing Date | :NA |

(71)**Name of Applicant :**
**1)SUGIYAMA SEISAKUSHO CO., LTD.**
Address of Applicant :15-9, 2-chome, Megurohoncho, Meguro-ku, Tokyo 152-0002, Japan.
(72)**Name of Inventor :**
**1)Tsutomu ISHIWATA**
**2)Hiroyuki KATO**
**3)Hayato SOBUE**
**4)Masahiro MINAMI**

(57) Abstract :
A commutator including: a commutator base member; an insulator that supports the commutator base member; and a plurality of radial slits that divide the commutator base member in a circumferential direction into a plurality of commutator segments, wherein the commutator base member includes: an annular disk-shaped carbon base member having a sliding surface configured to come into sliding contact with a brush, the carbon base member provided with a through hole in a central portion thereof; and a metal base member having a plurality of terminals to which coils are connected, the metal base member being provided in a central portion thereof with a through hole and a cylindrical protrusion provided at a circumferential edge of the through hole, the metal base member being joined to the carbon base member with the cylindrical protrusion press-fitted into the through hole of the carbon base member.

No. of Pages : 34 No. of Claims : 12

(12) PATENT APPLICATION PUBLICATION
(21) Application No.9441/DELNP/2014 A
(19) INDIA
(22) Date of filing of Application :10/11/2014
(43) Publication Date : 17/07/2015

(54) Title of the invention : ARRAGNEMENT OF A SWITCHGEAR IN A TOWER OF A WIND TURBINE

(51) International classification :F03D11/00
(31) Priority Document No :61/657329
(32) Priority Date :08/06/2012
(33) Name of priority country :U.S.A.
(86) International Application No :PCT/DK2013/050181
Filing Date :07/06/2013
(87) International Publication No :WO 2013/182205
(61) Patent of Addition to Application Number :NA
Filing Date :NA
(62) Divisional to Application Number :NA
Filing Date :NA

(71)**Name of Applicant :**
**1)VESTAS WIND SYSTEMS A/S**
Address of Applicant :Hedeager 44, DK -8200 Aarhus N Denmark
(72)**Name of Inventor :**
**1)NIELSEN, Jesper**

(57) Abstract :
A wind turbine comprising a novel switchgear arrangement is described. The wind turbine includes a tower, a rotor supported at an upper end of the tower, a generator, a transformer for increasing the voltage output of the generator prior to supplying a collector grid, and switchgear arranged between the transformer and the collector grid. The switchgear includes a first switching device associated with the transformer, and a second switching device associated with one or more cables connecting the wind turbine to another wind turbine in the collector grid. The first switching device is connected to but located remotely from , the second switching device.

No. of Pages : 22 No. of Claims : 22

(12) PATENT APPLICATION PUBLICATION
(21) Application No.105/DEL/2015 A
(19) INDIA
(22) Date of filing of Application :13/01/2015
(43) Publication Date : 17/07/2015

(54) Title of the invention : AIR CLEANER OF ENGINE FOR SADDLE-TYPE VEHICLE

| | |
|---|---|
| (51) International classification | :f02M |
| (31) Priority Document No | :2014-005039 |
| (32) Priority Date | :15/01/2014 |
| (33) Name of priority country | :Japan |
| (86) International Application No | :NA |
| Filing Date | :NA |
| (87) International Publication No | : NA |
| (61) Patent of Addition to Application Number | :NA |
| Filing Date | :NA |
| (62) Divisional to Application Number | :NA |
| Filing Date | :NA |

(71)**Name of Applicant :**
**1)HONDA MOTOR CO., LTD.**
Address of Applicant :1-1, Minami-Aoyama 2-chome, Minato-ku, Tokyo 107-8556, Japan,
(72)**Name of Inventor :**
**1)TOSHIHIRO KUBO**
**2)TORU UESAKA**

(57) Abstract :
An intake duct 65 for introducing air into an uncleaned air chamber 49 is attached to a maintenance lid 59 in such a manner as to penetrate the maintenance lid 59.

No. of Pages : 31 No. of Claims : 5

(12) PATENT APPLICATION PUBLICATION
(21) Application No.81/DEL/2014 A
(19) INDIA
(22) Date of filing of Application :10/01/2014
(43) Publication Date : 17/07/2015

(54) Title of the invention : HYBRID HEAT EXCHANGERS AND METHOD OF MANUFACTURE THEREOF

(51) International classification :C02F
(31) Priority Document No :NA
(32) Priority Date :NA
(33) Name of priority country :NA
(86) International Application No :NA
Filing Date :NA
(87) International Publication No : NA
(61) Patent of Addition to Application Number :NA
Filing Date :NA
(62) Divisional to Application Number :NA
Filing Date :NA

(71)**Name of Applicant :**
**1)BRY-AIR [ASIA] PVT. LTD.**
Address of Applicant :20, RAJPUR ROAD, DELHI 110051, INDIA.
(72)**Name of Inventor :**
**1)DEEPAK PAHWA**
**2)BIDYUT BARAN SAHA**
**3)ANIL KUMAR CHOUDHARY**
**4)RANJAN SACHDEV**
**5)KULDEEP SINGH MALIK**

(57) Abstract :
The present invention provides a hybrid adsorption heat exchanging device comprising: at least one tubular or micro channel structure for carrying a heat transfer fluid; the external surface of said structure being provided with extensions in at least two locations; said extensions forming a bed therebetween for providing one or more adsorbent materials; a coating of adsorbent material being provided on at least a part of said extensions.

No. of Pages : 51 No. of Claims : 43

(12) PATENT APPLICATION PUBLICATION
(21) Application No.81/DEL/2015 A
(19) INDIA
(22) Date of filing of Application :09/01/2015
(43) Publication Date : 17/07/2015

(54) Title of the invention : MOBILE ACCESS CONTROL SYSTEM AND METHOD

(51) International classification :g06f
(31) Priority Document No :14/152342
(32) Priority Date :10/01/2014
(33) Name of priority country :U.S.A.
(86) International Application No :NA
Filing Date :NA
(87) International Publication No : NA
(61) Patent of Addition to Application Number :NA
Filing Date :NA
(62) Divisional to Application Number :NA
Filing Date :NA

(71)**Name of Applicant :**
**1)HONEYWELL INTERNATIONAL INC.**
Address of Applicant :101 Columbia Road, POB 2245, Morristown, N.J. 07962-2245, USA
(72)**Name of Inventor :**
**1)LI OUYANG**
**2)SHENG YI**
**3)CHEN CHEN**

(57) Abstract :
An apparatus including an access door of a secured area, a lock that controls access into the secured area through the door, a controller coupled to the lock, a portable wireless device proximate the door, the portable wireless device wirelessly retrieves an identifier from the door, wirelessly transfers the identifier of the door and a personal identifier of a person carrying the portable wireless device to the controller, the controller compares the received personal identifier with a list of identifiers of persons authorized to enter the secured area, determines that the received personal identifier matches an identifier of the list of identifiers and activates the lock allowing physical entry by the person into the secured area.

No. of Pages : 13 No. of Claims : 15

(12) PATENT APPLICATION PUBLICATION
(19) INDIA
(22) Date of filing of Application :11/11/2014
(21) Application No.9463/DELNP/2014 A
(43) Publication Date : 17/07/2015

(54) Title of the invention : CIRCUIT INTERRUPTER AND INDICATOR APPARATUS

(51) International classification :H01H71/04,H01H9/16
(31) Priority Document No :13/548862
(32) Priority Date :13/07/2012
(33) Name of priority country :U.S.A.
(86) International Application No :PCT/US2013/038365
Filing Date :26/04/2013
(87) International Publication No :WO 2014/011305
(61) Patent of Addition to Application Number :NA
Filing Date :NA
(62) Divisional to Application Number :NA
Filing Date :NA

(71)**Name of Applicant :**
**1)EATON CORPORATION**
Address of Applicant :1000 Eaton Boulevard, Cleveland, Ohio 44122 U.S.A.
(72)**Name of Inventor :**
**1)GOTTSCHALK, Andrew Lawrence**
**2)SCHALTENBRAND, Brian John**

(57) Abstract :
A circuit interrupter (2) includes an indicator apparatus (4) having a pair of movable elements (16, 20) and a connection apparatus (24) that enables the pair of movable elements to be cooperable. One of the movable elements is connected with an indicator element (28) that indicates an OPEN and/or a CLOSED condition of the circuit interrupter. A pair of engagement structures (48, 88) are situated on the pair of movable elements and enable the pair of movable elements to be engageable with one another. A biasing element (90) extends between the pair of movable elements and is configured to absorb some of the kinetic energy of a trip event which resists breakage of the indicator apparatus. The indicator element changes states when the set of separable contacts are at a relatively small amount of separation and does not require the set of separable contacts to reach the end of their travel before changing state.

No. of Pages : 26 No. of Claims : 14

(12) PATENT APPLICATION PUBLICATION
(19) INDIA
(22) Date of filing of Application :11/11/2014
(21) Application No.9464/DELNP/2014 A
(43) Publication Date : 17/07/2015

(54) Title of the invention : FLAVOURED RODS FOR USE IN AEROSOL GENERATING ARTICLES

(51) International classification :A24C5/18,A24B3/14,A24D1/00
(31) Priority Document No :12170358.1
(32) Priority Date :31/05/2012
(33) Name of priority country :EPO
(86) International Application No :PCT/EP2013/061209
Filing Date :30/05/2013
(87) International Publication No :WO 2013/178767
(61) Patent of Addition to Application Number :NA
Filing Date :NA
(62) Divisional to Application Number :NA
Filing Date :NA

(71)**Name of Applicant :**
**1)PHILIP MORRIS PRODUCTS S.A.**
Address of Applicant :Quai Jeanrenaud 3, CH- 2000 Neuchtel Switzerland
(72)**Name of Inventor :**
**1)METRANGOLO, Alessandro**
**2)GINDRAT, Pierre- Yves**
**3)FAULKNER, John**
**4)SCHALLER, Jean- Pierre**
**5)SCHNEIDER, Jean- Claude**

(57) Abstract :
A rod is formed from a first sheet comprising a tobacco material (2) and a second sheet (3) comprising a non- tobacco flavourant the first and second sheets being gathered together and circumscribed by a wrapper (12). The rod may be used as a component part of an aerosol- generating article.

No. of Pages : 21 No. of Claims : 15

(12) PATENT APPLICATION PUBLICATION
(19) INDIA
(22) Date of filing of Application :11/11/2014
(21) Application No.9465/DELNP/2014 A
(43) Publication Date : 17/07/2015

(54) Title of the invention : ENHANCED SECURE VIRTUAL MACHINE PROVISIONING

(51) International classification :G06F21/57
(31) Priority Document No :NA
(32) Priority Date :NA
(33) Name of priority country :NA
(86) International Application No :PCT/EP2012/059768
Filing Date :24/05/2012
(87) International Publication No :WO 2013/174437
(61) Patent of Addition to Application Number :NA
Filing Date :NA
(62) Divisional to Application Number :NA
Filing Date :NA

(71)**Name of Applicant :**
**1)TELEFONAKTIEBOLAGET L M ERICSSON (PUBL)**
Address of Applicant :Torshamnsgatan 21 23 S 164 83 Stockholm Sweden
(72)**Name of Inventor :**
**1)MORENIUS, Fredric**
**2)M‰HES, Andr¡s**
**3)GEHRMANN, Christian**

(57) Abstract :
In a method of provisioning a virtual machine (VM) to a computing network (401), a VM manager or provisioner (403, 408) encrypts a virtual machine using a key bound to at least one security profile indicative of one or more security requirements that a computing resource (402) of the computing network (401) must satisfy in order to be able to decrypt the VM. A key for use in decrypting the VM has previously been sealed into multiple (and preferably into all) computing resources (402) in the network into which the VM is to be provisioned, and has been sealed such that a computing resource can obtain the key only if it is in a state that satisfies the security profile, or at least one security, profile to which the key is bound The VM manager or provisioner (403, 408) creates a VM launch package that includes the encrypted VM and that also includes a key that may be used in decrypting the encrypted VM. When the VM launch package is received at a computing resource (402), the computing resource will not be able to recover the key for use in decrypting the VM- and hence will be unable to decrypt the VM- unless the computing resource satisfies the security requirements indicated by the security profile. The VM manager or provisioner can thus be sure that the VM will not be launched on a computing resource that does not meet the desired security profile. Alternatively the VM manager or provisioner (403 , 408) may send a token corresponding to a desired security profile with an encrypted VM. A computing resource uses the token to obtain a key to decrypt the VM but the computing resource will not be able to recover the key unless the computing resource satisfies the security requirements indicated by the token.

No. of Pages : 52 No. of Claims : 38

(12) PATENT APPLICATION PUBLICATION
(19) INDIA
(22) Date of filing of Application :10/11/2014
(21) Application No.9434/DELNP/2014 A
(43) Publication Date : 17/07/2015

(54) Title of the invention : NUCLEAR TRANSPORT MODULATORS AND USES THEREOF

(51) International classification :C07D403/12,C07D413/12,C07D249/08
(31) Priority Document No :61/644802
(32) Priority Date :09/05/2012
(33) Name of priority country :U.S.A.
(86) International Application No :PCT/US2013/040404
Filing Date :09/05/2013
(87) International Publication No :WO 2013/170068
(61) Patent of Addition to Application Number :NA
Filing Date :NA
(62) Divisional to Application Number :NA
Filing Date :NA

(71)**Name of Applicant :**
**1)KARYOPHARM THERAPEUTICS ,INC.**
Address of Applicant :2 Mercer Road, Natick, MA 01760 U.S.A.
(72)**Name of Inventor :**
**1)SANDANAYAKA, Vincent, P.**
**2)SHECHTER, Sharon**
**3)SHACHAM, Sharon**
**4)MCCAULEY, Dilara**
**5)BALOGLU, Erkan**

(57) Abstract :
The present invention relates to compounds of formula I: and pharmaceutically acceptable salts thereof pharmaceutical compositions comprising the compounds of formula I, and methods of using said compounds, salts and compositions in the treatment of various disorders associated with CRM1 activity.

No. of Pages : 171 No. of Claims : 31

(12) PATENT APPLICATION PUBLICATION
(19) INDIA
(22) Date of filing of Application :10/11/2014
(21) Application No.9435/DELNP/2014 A
(43) Publication Date : 17/07/2015

(54) Title of the invention : OPTICAL DATA TRANSMISSION DEVICE USING OPTICAL TIME DOMAIN REFLECTROMETRY

(51) International classification :G01M11/00,H04B10/071
(31) Priority Document No :12305591.5
(32) Priority Date :29/05/2012
(33) Name of priority country :EPO
(86) International Application No :PCT/EP2013/058132
Filing Date :19/04/2013
(87) International Publication No :WO 2013/178403
(61) Patent of Addition to Application Number :NA
Filing Date :NA
(62) Divisional to Application Number :NA
Filing Date :NA

(71)**Name of Applicant :**
**1)ALCATEL LUCENT**
Address of Applicant :3, avenue Octave Greard, F-75007 Paris France
(72)**Name of Inventor :**
**1)STRAUB, Michael**
**2)HEHMANN, Joerg**
**3)VANKEIRSBILCK, Rudi**
**4)MEERSMAN, Stijn**
**5)CLYBOUW Yannick**

(57) Abstract :
Proposed is an optical data transmission device for an optical access network that comprises a laser transmission unit which generates an optical transmission signal and a driving unit, which controls the laser transmission unit for modulating the transmission signal. The device comprises an optical reception unit that converts the received optical signal into an electrical measurement signal. For this the reception unit contains a photo -diode and an electrical amplifier. The optical reception unit is separate from the laser transmission unit. A control unit controls the laser transmission unit, such that the optical transmission signal is modulated in dependence on a measurement signal. The control unit measures multiple electrical measurement signals during a measurement interval and determines an averaged received electrical measurement signal. Even furthermore, the control unit controls the electrical amplifier, such that the electrical amplifier is turned off during a time interval prior to the measurement interval.

No. of Pages : 17 No. of Claims : 14

(12) PATENT APPLICATION PUBLICATION
(19) INDIA
(22) Date of filing of Application :10/11/2014
(21) Application No.9437/DELNP/2014 A
(43) Publication Date : 17/07/2015

(54) Title of the invention : STEROL DERIVATIVES AND USE THEREOF FOR TREATING DISEASES INVOLVING TRANSFORMED ASTROCYTE CELLS OR FOR TREATING MALIGNANT HAEMOPATHIES

(51) International classification :C07J9/00,C07J41/00,C07J75/00
(31) Priority Document No :12305518.8
(32) Priority Date :10/05/2012
(33) Name of priority country :EPO
(86) International Application No:PCT/IB2013/053669
Filing Date :07/05/2013
(87) International Publication No :WO 2013/168096
(61) Patent of Addition to Application Number :NA
Filing Date :NA
(62) Divisional to Application Number :NA
Filing Date :NA

(71)**Name of Applicant :**
**1)BETA INNOV**
Address of Applicant :49 rue Rouelle F- 75015 Paris France
(72)**Name of Inventor :**
**1)CLARION, Ludovic**
**2)MERSEL, Marcel**
**3)PETITE, Didier**

(57) Abstract :
The invention relates to novel sterol derivatives the preparation method thereof pharmaceutical compositions containing them and use thereof for treating diseases involving transformed astrocyte cells or for treating malignant haemopathies. The invention in particular relates to the treatment of glioblastoma multiforme, as well as of other cancers such as lymphomas neuroblastomas and melanomas.

No. of Pages : 71 No. of Claims : 22

(12) PATENT APPLICATION PUBLICATION
(21) Application No.9438/DELNP/2014 A
(19) INDIA
(22) Date of filing of Application :10/11/2014
(43) Publication Date : 17/07/2015

(54) Title of the invention : METHOD FOR ESTIMATING THE ROTATIONAL SPEED OF A TOOL MOUNTED ON A ROTATING SPINDLE OF A MACHINE TOOL AND SUCH A MACHINE TOOL

(51) International classification :G01P3/38,G01P21/02,B23Q15/08
(31) Priority Document No :BO2012A000289
(32) Priority Date :25/05/2012
(33) Name of priority country :Italy
(86) International Application No :PCT/EP2013/060127
Filing Date :16/05/2013
(87) International Publication No :WO 2013/174707
(61) Patent of Addition to Application Number :NA
Filing Date :NA
(62) Divisional to Application Number :NA
Filing Date :NA

(71)**Name of Applicant :**
**1)MARPOSS SOCIETA PER AZIONI**
Address of Applicant :Via Saliceto 13, 1- 40010 Bentivoglio (BO) Italy
(72)**Name of Inventor :**
**1)PASSINI, Stefano**
**2)MALPEZZI, Domenico**

(57) Abstract :
In a machine tool (1) comprising a rotating spindle (2) and a vision system (7) for acquiring images of a tool (3) mounted on the spindle, for each value (VC) of an interval (ICN) of preselected rotational speed values centred on a nominal rotational speed value (VN) of the spindle, an image acquisition period (TA) is determined, that is a multiple of the rotational period (TR) of the spindle calculated for that preselected speed value and compatible with the vision system and, while the spindle is rotating at the nominal rotational speed, a representative couple of tool images that are temporally spaced apart from one another of the image acquisition period is obtained in order to obtain an estimated speed value (VS), associated to the nominal speed value, by selecting that preselected speed value to which the representative couple of images that are the most similar to each other on the basis of a similarity rule corresponds.

No. of Pages : 20 No. of Claims : 13

(12) PATENT APPLICATION PUBLICATION
(19) INDIA
(22) Date of filing of Application :10/11/2014
(21) Application No.9439/DELNP/2014 A
(43) Publication Date : 17/07/2015

(54) Title of the invention : THERMALLY CONDUCTING RODS FOR USE IN AEROSOL GENERATING ARTICLES

(51) International classification :A24B3/14,A24C5/18,A24F47/00
(31) Priority Document No :12170359.9
(32) Priority Date :31/05/2012
(33) Name of priority country :EPO
(86) International Application No :PCT/EP2013/061210
Filing Date :30/05/2013
(87) International Publication No :WO 2013/178768
(61) Patent of Addition to Application Number :NA
Filing Date :NA
(62) Divisional to Application Number :NA
Filing Date :NA

(71)**Name of Applicant :**
**1)PHILIP MORRIS PRODUCTS S.A.**
Address of Applicant :Quai Jeanrenaud 3, CH -2000 Neuchatel Switzerland
(72)**Name of Inventor :**
**1)METRANGOLO, Alessandro**
**2)GINDRAT, Pierre- Yves**
**3)FAULKNER ,John**

(57) Abstract :
A rod is formed from a first sheet comprising an aerosol -forming material (2) and a second sheet comprising a thermally- conductive material (3), the first and second sheets being gathered together and circumscribed by a wrapper (12). The rod may be used as a component part of an aerosol generating article.

No. of Pages : 22 No. of Claims : 14

(12) PATENT APPLICATION PUBLICATION
(21) Application No.3216/DEL/2014 A
(19) INDIA
(22) Date of filing of Application :07/11/2014
(43) Publication Date : 17/07/2015

(54) Title of the invention : MOLDED CASE CIRCUIT BREAKER

| | |
|---|---|
| (51) International classification | :h01h |
| (31) Priority Document No | :10-2013-0135801 |
| (32) Priority Date | :08/11/2013 |
| (33) Name of priority country | :Republic of Korea |
| (86) International Application No | :NA |
| Filing Date | :NA |
| (87) International Publication No | : NA |
| (61) Patent of Addition to Application Number | :NA |
| Filing Date | :NA |
| (62) Divisional to Application Number | :NA |
| Filing Date | :NA |

(71)**Name of Applicant :**
**1)LSIS CO., LTD.**
Address of Applicant :127, LS-ro, Dongan-gu, Anyang-si, Gyeonggi-do 431-848, Republic of Korea
(72)**Name of Inventor :**
**1)Bong Yun JANG**

(57) Abstract :
Disclosed is a molded case circuit breaker. The molded case circuit breaker includes a case; an interrupter assembly installed in the case, and provided with an arc gas outlet for discharging arc gas generated from inside of the interrupter assembly to outside; an exhaustion guiding portion disposed between the interrupter assembly and the terminal portion, and provided with a discharge chamber therein, to thus provide an arc gas passage between the arc gas outlet and a vent chute of the terminal portion; and an exhaustion cover mounted to the case with a structure to cover the exhaustion guiding portion, to thus block the arc gas passage.

No. of Pages : 31 No. of Claims : 12

(12) PATENT APPLICATION PUBLICATION
(21) Application No.3217/DEL/2014 A
(19) INDIA
(22) Date of filing of Application :07/11/2014
(43) Publication Date : 17/07/2015

(54) Title of the invention : MOLDED CASE CIRCUIT BREAKER

| | |
|---|---|
| (51) International classification | :h01h |
| (31) Priority Document No | :10-2013-0135800 |
| (32) Priority Date | :08/11/2013 |
| (33) Name of priority country | :Republic of Korea |
| (86) International Application No | :NA |
| Filing Date | :NA |
| (87) International Publication No | : NA |
| (61) Patent of Addition to Application Number | :NA |
| Filing Date | :NA |
| (62) Divisional to Application Number | :NA |
| Filing Date | :NA |

(71)**Name of Applicant :**
**1)LSIS CO., LTD.**
Address of Applicant :127, LS-ro, Dongan-gu, Anyang-si, Gyeonggi-do 431-848, Republic of Korea
(72)**Name of Inventor :**
**1)Bong Yun JANG**

(57) Abstract :
A molded case circuit breaker (MCCB) includes a case, an interrupter assembly, an exhaust guide part, an exhaust cover, a sealing groove and a sealing projection. Ihe interrupter assembly is mounted inside the case, and has an arc gas exhaust port to exhaust an arc gas generated inside the case. The exhaust guide part is disposed between the interrupter assembly and the terminal part, and has an exhaust chamber therein to provide an arc gas passage between the arc gas exhaust port and a vent chute of the terminal part. The exhaust cover is mounted to the case in a structure covering the exhaust guide part, to seal the arc gas passage. The sealing groove is formed in an inner surface of the exhaust cover. The sealing projection is formed on the arc gas exhaust port of the interrupter assembly, to be inserted and coupled into the sealing groove.

No. of Pages : 29 No. of Claims : 5

(12) PATENT APPLICATION PUBLICATION
(21) Application No.552/DEL/2009 A
(19) INDIA
(22) Date of filing of Application :23/03/2009
(43) Publication Date : 17/07/2015

(54) Title of the invention : A DEGRADABLE BRAN BASED COMPOSITION AND USES THEREOF

(51) International classification :A23L1/10
(31) Priority Document No :NA
(32) Priority Date :NA
(33) Name of priority country :NA
(86) International Application No :NA
Filing Date :NA
(87) International Publication No :NA
(61) Patent of Addition to Application Number :NA
Filing Date :NA
(62) Divisional to Application Number :NA
Filing Date :NA

(71)**Name of Applicant :**
**1)DIRECTOR GENERAL, DEFENCE RESEARCH & DEVELOPMENT ORGANISATION**
Address of Applicant :MINISTRY OF DEFENCE, DEFENCE R & D ORGANISATION DTE OF ER & IPR GROUP ROOM NO. 348, B- WING, DRDO BHAWAN, RAJAJI MARG, NEW DELHI - 110011 (INDIA).
(72)**Name of Inventor :**
**1)JOHNSY, GEORGE**
**2)RANGANATHAN, KUMAR**
**3)VALLAYIL APPUKUTTAN, SAJEEV KUMAR**
**4)JAVOORU HANUMANTHAPA LAXMANA**
**5)RAMALINGAM, RAJAMANICKAM**
**6)CHELLAPPA, JAYAPRAHASH**
**7)SHANMUGAM, NADANASABAPATHI**
**8)AMARINDER SINGH, BAWA**

(57) Abstract :
A degradable bran based composition is disclosed in the present disclosure which comprises of 5 to 20 parts by weight of bran, 0.01 to 1 parts by weight of a photosensitizer, 1 to 10 parts by weight of a plasticizer, 80 to 100 parts by weight of a low density polyethylene resin and optionally 5 to 20 parts by weight of linear low density polyethylene is provided.

No. of Pages : 12 No. of Claims : 9

(12) PATENT APPLICATION PUBLICATION
(19) INDIA
(22) Date of filing of Application :13/01/2014
(21) Application No.85/DEL/2014 A
(43) Publication Date : 17/07/2015

(54) Title of the invention : A NOVEL COMPOSITION

(51) International classification :D01H
(31) Priority Document No :NA
(32) Priority Date :NA
(33) Name of priority country :NA
(86) International Application No :NA
Filing Date :NA
(87) International Publication No : NA
(61) Patent of Addition to Application Number :NA
Filing Date :NA
(62) Divisional to Application Number :NA
Filing Date :NA

(71)**Name of Applicant :**
**1)COUNCIL OF SCIENTIFIC & INDUSTRIAL RESEARCH**
Address of Applicant :ANUSANDHAN BHAWAN, RAFI MARG, NEW DELHI-110001, INDIA
(72)**Name of Inventor :**
**1)CHELLAPPA MURALIDHARAN**

(57) Abstract :
The present invention provides a composition for water free, pickle free chrome tanning of hides/skins comprising of Basic chrome sulphate, alkali metal salt of organic acid and polyhydric alcohol for chrome tanning of hides and/or skins. The chrome tanning process ensures avoiding use of water and the conventional pickling operation. It is envisaged to have tremendous application potential in the tanning industry to ensure eco-benign leather processing that does not add to environmental pollution. The invention is therefore envisaged to play a crucial role in enhancing the economic and environmental benefits associated with chrome tanning.

No. of Pages : 9 No. of Claims : 6

(12) PATENT APPLICATION PUBLICATION
(19) INDIA
(22) Date of filing of Application :11/11/2014
(21) Application No.9484/DELNP/2014 A
(43) Publication Date : 17/07/2015

(54) Title of the invention : TURBOCHARGER BLADE WITH CONTOUR EDGE RELIEF AND TURBOCHARGER INCORPORATING THE SAME

(51) International classification :F02B37/00,F02B39/00,F01D5/14
(31) Priority Document No :61/637161
(32) Priority Date :23/04/2012
(33) Name of priority country :U.S.A.
(86) International Application No :PCT/US2013/035745
Filing Date :09/04/2013
(87) International Publication No :WO 2013/162874
(61) Patent of Addition to Application Number :NA
Filing Date :NA
(62) Divisional to Application Number :NA
Filing Date :NA

(71)**Name of Applicant :**
**1)BORGWARNER INC.**
Address of Applicant :Patent Department, 3850 Hamlin Road, Auburn Hills ,Michigan 48326 U.S.A.
(72)**Name of Inventor :**
**1)DEXTRAZE, Stephanie**
**2)GRABOWSKA ,David G.**

(57) Abstract :
A turbocharger (5) comprising a housing (10) including a compressor shroud (14) and a turbine shroud (12). The turbocharger (5) further comprises compressor wheel (18) and a turbine wheel (16). The compressor wheel (18) includes a compressor hub (44) and a plurality of compressor blades (45 , 46) extending radially from the compressor hub (44). Each compressor blade (45, 46) includes a leading edge (50 , 51), a trailing edge (52 ,53,) and a compressor shroud contour edge (54, 55) extending therebetween. The turbine wheel (16) includes a turbine hub (24) and a plurality of turbine blades (26) extending radially from the turbine hub (24). Each turbine blade (26) including a leading edge (30), a trailing edge (32), and a turbine shroud contour edge (34) extending therebetween. At least one of the compressor and turbine blades includes an edge relief (40 , 60, 61) formed along at least a portion of the corresponding compressor or turbine shroud contour edge.

No. of Pages : 23 No. of Claims : 15

(12) PATENT APPLICATION PUBLICATION
(19) INDIA
(22) Date of filing of Application :11/11/2014
(21) Application No.9448/DELNP/2014 A
(43) Publication Date : 17/07/2015

(54) Title of the invention : ELEVATOR SECURITY SYSTEM

(51) International classification :B66B1/34
(31) Priority Document No :NA
(32) Priority Date :NA
(33) Name of priority country :NA
(86) International Application No :PCT/US2012/043663
Filing Date :22/06/2012
(87) International Publication No :WO 2013/191703
(61) Patent of Addition to Application Number :NA
Filing Date :NA
(62) Divisional to Application Number :NA
Filing Date :NA

(71)**Name of Applicant :**
**1)OTIS ELEVATOR COMPANY**
Address of Applicant :10 Farm Springs Farmington Connecticut 06032 U.S.A.
(72)**Name of Inventor :**
**1)MIYAJIMA, Natsuki**
**2)HOOTSMANS Norbert Antony Murray**
**3)IKEDA Muneo**

(57) Abstract :
An elevator security system for a building includes data relating to a floor that a user may access in the building a device in which the data is stored, a credential containing the data in a machine readable format and created by the user, and a first machine reader reading the credential and sending data therein to the device for querying whether the user may access the floor, the device allowing access to an elevator car for transport to the floor if the credential is in sync with the data stored in the device.

No. of Pages : 16 No. of Claims : 23

(12) PATENT APPLICATION PUBLICATION
(19) INDIA
(22) Date of filing of Application :11/11/2014
(21) Application No.9449/DELNP/2014 A
(43) Publication Date : 17/07/2015

(54) Title of the invention : CARTILAGE REPAIR, PRESERVATION AND GROWTH BY STIMULATION OF BONE-CHONDRAL INTERPHASE AND DELIVERY SYSTEM AND RELATED METHODS THEREFOR

| | |
|---|---|
| (51) International classification | :A61B17/56,A61M25/01,A61B17/34 |
| (31) Priority Document No | :61/686835 |
| (32) Priority Date | :11/04/2012 |
| (33) Name of priority country | :U.S.A. |
| (86) International Application No | :PCT/US2013/036259 |
| Filing Date | :11/04/2013 |
| (87) International Publication No | :WO 2013/155359 |
| (61) Patent of Addition to Application Number | :NA |
| Filing Date | :NA |
| (62) Divisional to Application Number | :NA |
| Filing Date | :NA |

(71)**Name of Applicant :**
**1)VAD, Vijay**
Address of Applicant :220 East 65th Street #4C, New York, NY 10065 U.S.A.
(72)**Name of Inventor :**
**1)VAD, Vijay**

(57) Abstract :
Therapeutics and methods of treatment to repair, preserve and grow cartilage are presented. In addition systems and methods for delivering a therapeutic to a hard to reach anatomical area, such as , for example, the BCI, are presented. A cannulated delivery device provided with a cutting tip, cutting flutes and threads on its distal end can be provided. Using such an exemplary device, various novel therapies for joint and cartilage repair, preservation and generation can be implemented. Alternatively, for disc repair, a delivery device directed to percutaneous intradiscal annular repair, or PIARES device can be used to introduce therapeutics intradiscally. The device may have two needles, with a first cannula/needle, with a finger grip at its distal end, and a longer inner needle to penetrate through the outer needle into the disc, and introduce therapeutics, for example, via a syringe. When provided with a septum at the inner needles proximal end, the PIARES device is a completely closed system, and its use minimizes trauma.

No. of Pages : 84 No. of Claims : 22

(12) PATENT APPLICATION PUBLICATION
(19) INDIA
(22) Date of filing of Application :11/11/2014

(21) Application No.9450/DELNP/2014 A
(43) Publication Date : 17/07/2015

(54) Title of the invention : PROCESS FOR THE PREPARATION OF RIVAROXABAN AND INTERMEDIATES THEREOF

| | |
|---|---|
| (51) International classification | :C07D413/14,C07D333/38,C07D409/12 |
| (31) Priority Document No | :1174/DEL/2012 |
| (32) Priority Date | :16/04/2012 |
| (33) Name of priority country | :India |
| (86) International Application No | :PCT/IB2013/053025 |
| Filing Date | :16/04/2013 |
| (87) International Publication No | :WO 2013/156936 |
| (61) Patent of Addition to Application Number | :NA |
| Filing Date | :NA |
| (62) Divisional to Application Number | :NA |
| Filing Date | :NA |

(71)**Name of Applicant :**
**1)RANBAXY LABORATORIES LIMITED**
Address of Applicant :Head Office: 12th Floor, Devika Tower, 06 Nehru Place, New Delhi 110019 India
(72)**Name of Inventor :**
**1)SINGH, Pankaj, Kumar**
**2)HASHMI, Mohammed, Salman**
**3)SACHDEVA, Yoginder Pal**
**4)KHANDURI, Chandra, Has**

(57) Abstract :
The present invention provides processes for the preparation of rivaroxaban and its intermediates.

No. of Pages : 24 No. of Claims : 13

(12) PATENT APPLICATION PUBLICATION
(19) INDIA
(22) Date of filing of Application :11/11/2014
(21) Application No.9451/DELNP/2014 A
(43) Publication Date : 17/07/2015

(54) Title of the invention : PROCESS FOR THE PREPARATION OF CRYSTALLINE VILAZODONE HYDROCHLORIDE

(51) International classification :C07D405/12
(31) Priority Document No :1173/DEL/2012
(32) Priority Date :16/04/2012
(33) Name of priority country :India
(86) International Application No :PCT/IB2013/053024
Filing Date :16/04/2013
(87) International Publication No :WO 2013/156935
(61) Patent of Addition to Application Number :NA
Filing Date :NA
(62) Divisional to Application Number :NA
Filing Date :NA

(71)**Name of Applicant :**
**1)RANBAXY LABORATORIES LIMITED**
Address of Applicant :Head Office: 12th Floor, Devika Tower, 06 Nehru Place, New Delhi, 110019 India
(72)**Name of Inventor :**
**1)DAS, Prasenjit**
**2)SRIVASTAVA, Bindu**
**3)MAHESHWARI, Nitin**
**4)MEERAN, Hashim, Nizar, Poovanathil, Nagoor**
**5)PRASAD, Mohan**
**6)ARORA, Sudershan, Kumar**

(57) Abstract :
The present invention relates to a process for the preparation of crystalline vilazodone hydrochloride.

No. of Pages : 10 No. of Claims : 9

(12) PATENT APPLICATION PUBLICATION
(19) INDIA
(22) Date of filing of Application :11/11/2014
(21) Application No.9453/DELNP/2014 A
(43) Publication Date : 17/07/2015

(54) Title of the invention : COUPLING ARRANGEMENT FOR A TELESCOPIC DEVICE

(51) International classification :A61M25/00,A61M25/01
(31) Priority Document No :PA 2012 70275
(32) Priority Date :23/05/2012
(33) Name of priority country :Denmark
(86) International Application No :PCT/DK2013/050149
Filing Date :17/05/2013
(87) International Publication No :WO 2013/174381
(61) Patent of Addition to Application Number :NA
Filing Date :NA
(62) Divisional to Application Number :NA
Filing Date :NA

(71)**Name of Applicant :**
**1)COLOPLAST A/S**
Address of Applicant :Holtedam 1, DK- 3050 Humlebaek Denmark
(72)**Name of Inventor :**
**1)SCHERTIGER, Lars Olav**

(57) Abstract :
According to the invention, there is provided a telescopic device 20 comprising a first tubular element 1 and an extension member 2, where the extension member 2 is displaceably arranged in an axial direction within the first tubular element 1 and wherein a coupling member 3 is provided movably on the extension member 2 and is positionable in first, second and third axial positions.

No. of Pages : 23 No. of Claims : 15

(12) PATENT APPLICATION PUBLICATION
(19) INDIA
(22) Date of filing of Application :11/11/2014
(21) Application No.9454/DELNP/2014 A
(43) Publication Date : 17/07/2015

(54) Title of the invention : COLLISION AVOIDANCE SYSTEM FOR GROUND CREW USING SENSORS

(51) International classification :G08G5/04,G08G5/00
(31) Priority Document No :61/653297
(32) Priority Date :30/05/2012
(33) Name of priority country :U.S.A.
(86) International Application No :PCT/US2013/043257
Filing Date :30/05/2013
(87) International Publication No :WO 2013/181334
(61) Patent of Addition to Application Number :NA
Filing Date :NA
(62) Divisional to Application Number :NA
Filing Date :NA

(71)**Name of Applicant :**
**1)HONEYWELL INTERNATIONAL INC.**
Address of Applicant :Patent Services M/S AB/2B, 101 Columbia Road, P. O. Box 2245, Morristown, New Jersey 07962 2245 U.S.A.
(72)**Name of Inventor :**
**1)LAMKIN, Andrew Fannon**
**2)STARR, Jeffrey W.**
**3)BUSTER, Duke**

(57) Abstract :
A ground obstacle collision- avoidance system includes a plurality of radar sensor modules that each receive at a radar detector radar return signals corresponding to reflections of the emitted signal from a ground obstacle, and transmits radar information associated with the received radar signal reflections reflected from the ground obstacle wherein each of the plurality of radar sensor modules are uniquely located on a surface of an aircraft that is at risk for collision with a ground obstacle, if the aircraft is moving; a gateway unit that receives the radar information transmitted from the radar sensor module and transmits information associated with the received radar information; a processing system configured to determine a distance from the installation aircraft to a detected ground object detected; and a display configured to present a plan view indicating an aircraft icon and a graphical ground obstacle ,icon that is associated with the detected ground obstacle.

No. of Pages : 36 No. of Claims : 20

(12) PATENT APPLICATION PUBLICATION
(21) Application No.1865/DELNP/2012 A
(19) INDIA
(22) Date of filing of Application :01/03/2012
(43) Publication Date : 17/07/2015

(54) Title of the invention : CONTROL DEVICE FOR VEHICLE

(51) International classification :F01P 7/16
(31) Priority Document No :NA
(32) Priority Date :NA
(33) Name of priority country :NA
(86) International Application No :PCT/JP2009/070427
Filing Date :04/12/2009
(87) International Publication No :WO 2011/067861
(61) Patent of Addition to Application Number :NA
Filing Date :NA
(62) Divisional to Application Number :NA
Filing Date :NA

(71)**Name of Applicant :**
**1)TOYOTA JIDOSHA KABUSHIKI KAISHA**
Address of Applicant :1, TOYOTA-CHO, TOYOTA-SHI, AICHI-KEN, 471-8571, JAPAN.
(72)**Name of Inventor :**
**1)KINOMURA SHIGEKI**
**2)SHINTANI OSAMU**
**3)FURUKOSHI TARO**
**4)KOMADA ATSUSHI**

(57) Abstract :
An electronic control unit (12) calculates the heat receiving quantity of a thermo wax to estimate the temperature of the thermo wax on the basis of the calculated heat receiving quantity and the heat capacity of the thermo wax, and controls a heater so that the temperature of the thermo wax reaches a predetermined target value. Further, the electronic control unit (12) changes the value of the heat capacity used to estimate the temperature of the thermo wax depending on the variation of the estimated temperature of the thermo wax across the phase transition point of the thermo wax so as to preferably control a switching valve which is operated by heating the thermo wax.

No. of Pages : 46 No. of Claims : 11

(12) PATENT APPLICATION PUBLICATION
(21) Application No.2212/DEL/2010 A
(19) INDIA
(22) Date of filing of Application :16/09/2010
(43) Publication Date : 17/07/2015

(54) Title of the invention : A POLYCHLOROPRENE ADHESIVE COMPOSITION AND A PROCESS FOR PREPARATION THEREOF

(51) International classification :C08F36/18
(31) Priority Document No :NA
(32) Priority Date :NA
(33) Name of priority country :NA
(86) International Application No :NA
Filing Date :NA
(87) International Publication No : NA
(61) Patent of Addition to Application Number :NA
Filing Date :NA
(62) Divisional to Application Number :NA
Filing Date :NA

(71)**Name of Applicant :**
**1)Director General Defence Research and Development Organization**
Address of Applicant :Ministry of Defence Govt. of India Room No 348 B-Wing DRDO Bhawan Rajaji Marg New Delhi 110011 India
(72)**Name of Inventor :**
**1)Annadurai Ponnuchamy**
**2)Padmakumar Chirattakattu Gopalakrishakurup**
**3)Jayesh Prabhakaran**

(57) Abstract :
The present invention provides a novel polychloroprene based adhesive composition for adhering rubber and metal/ceramic substrates for underwater rubber encapsulation application exhibiting high insulation resistance, comprising: a) 11-15% by weight of a polychloroprene compound mix; b) 1.8-4% by weight of a resole type resin; and c) 68-83% by weight of one or more organic solvents. The present invention also provides a process for preparing the polychloroprene adhesive composition.

No. of Pages : 13 No. of Claims : 12

(12) PATENT APPLICATION PUBLICATION
(21) Application No.3194/DEL/2014 A
(19) INDIA
(22) Date of filing of Application :05/11/2014
(43) Publication Date : 17/07/2015

(54) Title of the invention : AUXILIARY STEAM SUPPLY SYSTEM IN SOLAR POWER PLANTS

(51) International classification :f01k
(31) Priority Document No :14/074,889
(32) Priority Date :08/11/2013
(33) Name of priority country :U.S.A.
(86) International Application No :NA
Filing Date :NA
(87) International Publication No : NA
(61) Patent of Addition to Application Number :NA
Filing Date :NA
(62) Divisional to Application Number :NA
Filing Date :NA

(71)**Name of Applicant :**
**1)ALSTOM TECHNOLOGY LTD**
Address of Applicant :BROWN BOVERI STRASSE 7, 5400 BADEN, SWITZERLAND
(72)**Name of Inventor :**
**1)TERDALKAR, RAHUL J**
**2)GIRARD, ROMANIN**

(57) Abstract :
An auxiliary steam supply system in a solar power plant includes a solar receiver having a super heater section, a turbine, a steam circuit, a thermal energy storage arrangement and an auxiliary steam circuit. The thermal energy storage arrangement, including a thermal energy storage medium, is configured for the steam circuit to receive a portion of the steam to heat the thermal energy storage medium. The thermal energy storage arrangement may receive the steam from any location across the super heater section. Moreover, the auxiliary steam circuit generating auxiliary steam flow, which thermally communicates with the thermal energy storage arrangement to be heated, is introduced to any location across the super heater section. Capacity of the thermal energy storage arrangement may be relatively small as compared to the solar . receiver and may be compact for placement on top of a tower.

No. of Pages : 34 No. of Claims : 19

(12) PATENT APPLICATION PUBLICATION
(19) INDIA
(22) Date of filing of Application :11/11/2014
(21) Application No.9477/DELNP/2014 A
(43) Publication Date : 17/07/2015

(54) Title of the invention : APPARATUS FOR GENERATING DEDICATED DATA CHANNELS IN BACKSCATTER RFID SYSTEM USING LOW PASS DELTA SYGMA MODULATOR

(51) International classification :H04B1/59,H03M7/32,H04B7/005
(31) Priority Document No :13/470709
(32) Priority Date :14/05/2012
(33) Name of priority country :U.S.A.
(86) International Application No :PCT/CA2012/000567
Filing Date :11/06/2012
(87) International Publication No :WO 2013/170337
(61) Patent of Addition to Application Number :NA
Filing Date :NA
(62) Divisional to Application Number :NA
Filing Date :NA

(71)**Name of Applicant :**
**1)TAG- COMM INC.**
Address of Applicant :263 Lion's Court, Waterloo, Ontario N2L 1S3 Canada
(72)**Name of Inventor :**
**1)MANKU ,Tajinder**

(57) Abstract :
A communication apparatus comprising an antenna for backscattering an incoming RF signal in accordance with a reflection coefficient of the antenna. The communication apparatus comprises at least one low pass delta sigma modulator which modulates the signal at its input and digitally controls the output of a variable impedance circuit, wherein the reflection coefficient of the antenna is varied based on the output of the variable impedance circuit. This communication device can be used in applications such as RFID tags.

No. of Pages : 27 No. of Claims : 21

(12) PATENT APPLICATION PUBLICATION
(19) INDIA
(22) Date of filing of Application :11/11/2014
(21) Application No.9480/DELNP/2014 A
(43) Publication Date : 17/07/2015

(54) Title of the invention : REVERSING DOUBLE FLOW GEARBOX ARRANGEMENT MAINLY FOR MOTOR VEHICLES AND CONSTRUCTION MACHINES WITH TWO BRANCHES OF OUTPUT FLOW

(51) International classification :F16H3/00,F16H37/04
(31) Priority Document No :PV 2012313
(32) Priority Date :11/05/2012
(33) Name of priority country :Czech Republic
(86) International Application No :PCT/CZ2013/000038
Filing Date :18/03/2013
(87) International Publication No :WO 2013/167095
(61) Patent of Addition to Application Number :NA
Filing Date :NA
(62) Divisional to Application Number :NA
Filing Date :NA

(71)**Name of Applicant :**
**1)ZETOR TRACTORS A.S.**
Address of Applicant :Trnkova 111 628 00 Brno Czech Republic
(72)**Name of Inventor :**
**1)LUKEÅ , Miroslav**
**2)LUK • Å , Jan**
**3)SLEZ • K, Martin**

(57) Abstract :
Arrangement of reversing double- flow gearbox for motor vehicles and construction machines, with two branches of output flow, consisting of an input shaft (13) equipped with a tooth wheel engaged with a tooth wheel, of a first disc clutch (1) and with a tooth wheel of a second disc clutch (2), wherein an output shaft (11) of the first disc clutch (1) houses a first set (3) of tooth wheels and a third set (5) of tooth wheels that are engaged through a first synchronisation clutch (61) and a second synchronisation clutch (62) with a set of tooth wheels arranged on the output shaft (10) of the gearbox, while an output shaft (12) of the second disc clutch (2) houses a second set (4) of tooth wheels and a fourth set (7) of tooth wheels that are engaged through a third synchronisation clutch (63) and a fourth synchronisation clutch (64) with a set of tooth wheels arranged on the output shaft (10) of the gearbox wherein the output shaft (11) of the first disc clutch (1) and the output shaft (12) of the second disc clutch (2) are inter- connected by an inserted set of gears (8) with a gearing synchronisation clutch (9) arranged on the output shaft (12) of the second clutch disc (2) or on output shaft (11) of the first disc clutch (1).

No. of Pages : 12 No. of Claims : 2

(12) PATENT APPLICATION PUBLICATION
(21) Application No.3224/DEL/2014 A
(19) INDIA
(22) Date of filing of Application :07/11/2014
(43) Publication Date : 17/07/2015

(54) Title of the invention : CONTACT LENSES WITH IMPROVED OXYGEN TRANSMISSION

(51) International classification :g02c
(31) Priority Document No :14/087,625
(32) Priority Date :22/11/2013
(33) Name of priority country :U.S.A.
(86) International Application No :NA
Filing Date :NA
(87) International Publication No : NA
(61) Patent of Addition to Application Number :NA
Filing Date :NA
(62) Divisional to Application Number :NA
Filing Date :NA

(71)**Name of Applicant :**
**1)JOHNSON & JOHNSON VISION CARE, INC.**
Address of Applicant :7500 Centurion Parkway, Jacksonville, Florida 32256, United States of America
(72)**Name of Inventor :**
**1)PHILIPPE F. JUBIN**
**2)PIERRE-YVES GERLIGAND**
**3)FANG YUAN**
**4)RADHAKRISHNAN DAMODHARAN**
**5)NOEL A. BRENNAN**

(57) Abstract :
Contact lenses may be designed with locally thinned regions to increase oxygen transmissibility to the eye. The locally thinned regions are preferably positioned outside of the optic zone and in the thicker peripheral zone. For a contact lens formed from a specific material, creating local thinner regions, for example, dimples in the back curve surface of the lens, provides an effective and efficient means for increasing oxygen diffusion.

No. of Pages : 25 No. of Claims : 12

(12) PATENT APPLICATION PUBLICATION
(19) INDIA
(22) Date of filing of Application :11/11/2014
(21) Application No.9470/DELNP/2014 A
(43) Publication Date : 17/07/2015

(54) Title of the invention : MECHANICALLY STRONG ABSORBABLE POLYMERIC BLEND COMPOSITIONS OF PRECISELY CONTROLLABLE ABSORPTION RATES PROCESSING METHODS AND PRODUCTS THEREFROM

(51) International classification :C08L67/04,A61B17/06,A61L17/12
(31) Priority Document No :61/651353
(32) Priority Date :24/05/2012
(33) Name of priority country :U.S.A.
(86) International Application No :PCT/US2013/042132
Filing Date :22/05/2013
(87) International Publication No :WO 2013/177236
(61) Patent of Addition to Application Number :NA
Filing Date :NA
(62) Divisional to Application Number :NA
Filing Date :NA

(71)**Name of Applicant :**
**1)ETHICON, INC.**
Address of Applicant :P.O. Box 151, U.S. Route 22, Somerville ,New Jersey 08876 U.S.A.
(72)**Name of Inventor :**
**1)MODESTO, Erneta**
**2)STEIGER, Daniel**
**3)JAMIOLKOWSKI, Dennis D.**

(57) Abstract :
Novel absorbable polymer blends are disclosed. The blends are useful for manufacturing medical devices having engineered degradation and breaking strength retention in vivo. The blends consist of a first absorbable polymeric component and a second absorbable polymeric component. The weight average molecular weight of the first polymeric component is higher than the weight average molecular weight of the second polymeric component. At least at least one of said components is at least partially end capped by a carboxylic acid group. Further aspects are medical devices made therefrom.

No. of Pages : 72 No. of Claims : 135

(12) PATENT APPLICATION PUBLICATION
(19) INDIA
(22) Date of filing of Application :11/11/2014
(21) Application No.9471/DELNP/2014 A
(43) Publication Date : 17/07/2015

(54) Title of the invention : CONTROLLING A SWITCHED MODE POWER SUPPLY WITH MAXIMISED POWER EFFICIENCY

(51) International classification :H02M3/337
(31) Priority Document No :NA
(32) Priority Date :NA
(33) Name of priority country :NA
(86) International Application No :PCT/EP2012/060892
Filing Date :08/06/2012
(87) International Publication No :WO 2013/182249
(61) Patent of Addition to Application Number :NA
Filing Date :NA
(62) Divisional to Application Number :NA
Filing Date :NA

(71)**Name of Applicant :**
**1)TELEFONAKTIEBOLAGET L M ERICSSON (PUBL)**
Address of Applicant :S- 164 83 Stockholm Sweden
(72)**Name of Inventor :**
**1)KARLSSON, Magnus**
**2)PERSSON, Oscar**

(57) Abstract :
A control circuit operable to generate a control signal (D) to control the duty cycle of a switched mode power supply (100), The control circuit comprises an. input terminal (205) for receiving a signal indicative of an input voltage (V) of the switched mode power supply (100), and a reference signal generator (210) operable to generate in dependence upon the received signal a reference signal (VR) that is a function of the input voltage (VIN). The control circuit further comprises an error signal generator (230) arranged to receive a signal indicative of an output voltage (VOUT) of the switched mode power supply (100) and operable to generate an error signal (V) based on the reference signal (VIN) and based on the output voltage (VOUT). The control circuit also includes a low pass filter (225) connected between the input terminal (205) and the error signal generator (230), in series with the reference signal generator (210), and a duty cycle control signal generator (250) operable to generate the control signal (D) to control the duty cycle of the switched mode power supply (100) in dependence upon the error signal (VE).

No. of Pages : 49 No. of Claims : 18

(12) PATENT APPLICATION PUBLICATION
(19) INDIA
(22) Date of filing of Application :11/11/2014
(21) Application No.9472/DELNP/2014 A
(43) Publication Date : 17/07/2015

(54) Title of the invention : CONTROLLING STREAMING OF DATA FROM A STREAMING SERVER TO A USER EQUIPMENT VIA A RADIO ACCESS NETWORK

| | |
|---|---|
| (51) International classification | :H04N21/238,H04L29/06,H04N21/222 |
| (31) Priority Document No | :61/654233 |
| (32) Priority Date | :01/06/2012 |
| (33) Name of priority country | :U.S.A. |
| (86) International Application No | :PCT/SE2013/050601 |
| Filing Date | :27/05/2013 |
| (87) International Publication No | :WO 2013/180629 |
| (61) Patent of Addition to Application Number | :NA |
| Filing Date | :NA |
| (62) Divisional to Application Number | :NA |
| Filing Date | :NA |

(71)**Name of Applicant :**
**1)TELEFONAKTIEBOLAGET L M ERICSSON (PUBL)**
Address of Applicant :S- 164 83 Stockholm Sweden
(72)**Name of Inventor :**
**1)KARLSEN, Johnny**
**2)WILLARS, Per**
**3)LOHMAR ,Thorsten**

(57) Abstract :
A method of controlling streaming of data , such as video , from a streaming server (150) to a User Equipment (UE) via a Radio Access Network (RAN) is provided. The method comprises receiving streaming data (300) from the streaming server, re shaping the received streaming data into bursts (310), and transmitting the bursts to the UE. The bursts are transmitted at a higher bitrates than the bitrates of the received streaming data. By re -shaping the streaming data into bursts streaming can be effected in a more radio-friendly way, since the UE may switch to a less resource consuming radio state in- between reception of data bursts delivered at high bitrates. Further , a corresponding computer program and computer program product , and a proxy unit for controlling streaming of data from a streaming server to a UE via a RAN , are provided.

No. of Pages : 28 No. of Claims : 12

(12) PATENT APPLICATION PUBLICATION
(19) INDIA
(22) Date of filing of Application :11/11/2014
(21) Application No.9466/DELNP/2014 A
(43) Publication Date : 17/07/2015

(54) Title of the invention : GUIDE PLATE FOR FASTENING RAILS FOR RAIL VEHICLES

(51) International classification :E01B9/30
(31) Priority Document No :12170731.9
(32) Priority Date :04/06/2012
(33) Name of priority country :EPO
(86) International Application No :PCT/EP2013/061460
Filing Date :04/06/2013
(87) International Publication No :WO 2013/182550
(61) Patent of Addition to Application Number :NA
Filing Date :NA
(62) Divisional to Application Number :NA
Filing Date :NA

(71)**Name of Applicant :**
**1)VOSSLOH- WERKE GMBH**
Address of Applicant :Vosslohstrae 4, 58791 Werdohl Germany
(72)**Name of Inventor :**
**1)KRIEG, Nikolaj**
**2)GNACZYNSKI, Martin**

(57) Abstract :
The invention concerns a guide plate for fastening rails (S) for rail vehicles comprising: a recess (30, 34) which is formed in the guide plate (3) from the underside (11), on which the guide plate (3) stands in the installed position; a support surface (13), which is formed on the upper side (10) of the guide plate (3) and is intended for a spring element (1, 2) provided for holding down the rail (S) to be fastened; and an abutment surface (9), which is formed on an end face of the guide plate (3) and extends in the longitudinal direction of the guide plate (3) and on which the rail (S) to be fastened is guided laterally in the installed position. Formed on the upper side (10) of the guide plate (3) is at least one reinforcing rib (21) which projects above the support surface (13) and extends transversely to the abutment surface (9). The recess which is formed in the guide plate (3) from the underside (11), extends into that region of the guide plate (3) in which the reinforcing rib (21) is formed.

No. of Pages : 25 No. of Claims : 12

(12) PATENT APPLICATION PUBLICATION
(21) Application No.9467/DELNP/2014 A
(19) INDIA
(22) Date of filing of Application :11/11/2014
(43) Publication Date : 17/07/2015

(54) Title of the invention : RESPIRATORY THERAPY APPARATUS

(51) International classification :A63B23/18,A61B5/087
(31) Priority Document No :1209962.8
(32) Priority Date :06/06/2012
(33) Name of priority country :U.K.
(86) International Application No :PCT/GB2013/000214
Filing Date :14/05/2013
(87) International Publication No :WO 2013/182833
(61) Patent of Addition to Application Number :NA
Filing Date :NA
(62) Divisional to Application Number :NA
Filing Date :NA

(71)**Name of Applicant :**
**1)SMITHS MEDICAL INTERNATIONAL LIMITED**
Address of Applicant :1500 Eureka Park, Lower Pemberton, Ashford, Kent TN25 4BF U.K.
(72)**Name of Inventor :**
**1)PETTITT, Emily**

(57) Abstract :
An inspiratory exerciser apparatus has a loop shape housing with a mouthpiece (1), an air inlet (2), an outlet (3) and a spring- loaded valve 4 that provides a restriction to inhalation through the inlet. The apparatus includes an electronics unit (60) that records use of the apparatus for download to a remote computer, such as via a connector port (65) or by wireless means. The electronics unit (60) also causes lamps (63) in a translucent part of the housing (11) to flash during the prescribed exercise period to encourage the patient to inhale and exhale at a prescribed rate and for a prescribed time.

No. of Pages : 18 No. of Claims : 15

(12) PATENT APPLICATION PUBLICATION
(19) INDIA
(22) Date of filing of Application :11/11/2014
(21) Application No.9468/DELNP/2014 A
(43) Publication Date : 17/07/2015

(54) Title of the invention : SYNTHETIC *BRASSICA* DERIVED CHLOROPLAST TRANSIT PEPTIDES

(51) International classification :A01H5/00,C12N15/29,C07K19/00
(31) Priority Document No :61/625222
(32) Priority Date :17/04/2012
(33) Name of priority country :U.S.A.
(86) International Application No :PCT/US2013/036980
Filing Date :17/04/2013
(87) International Publication No :WO 2013/158766
(61) Patent of Addition to Application Number :NA
Filing Date :NA
(62) Divisional to Application Number :NA
Filing Date :NA

(71)**Name of Applicant :**
**1)DOW AGROSCIENCES LLC**
Address of Applicant :9330 Zionsville Rd. Indianapolis IN 46268 U.S.A.
(72)**Name of Inventor :**
**1)LIRA Justin M.**
**2)CICCHILLO Robert M.**
**3)YERKES Carla**
**4)ROBINSON Andrew E.**

(57) Abstract :
This disclosure concerns compositions and methods for targeting peptides polypeptides and proteins to plastids of plastid containing cells. In some embodiments the disclosure concerns chloroplast transit peptides that may direct a polypeptide to a plastid and nucleic acid molecules encoding the same. In some embodiments the disclosure concerns methods for producing a transgenic plant material (e.g. a transgenic plant) comprising a chloroplast transit peptide as well as plant materials produced by such methods and plant commodity products produced therefrom.

No. of Pages : 212 No. of Claims : 76

(12) PATENT APPLICATION PUBLICATION
(19) INDIA
(22) Date of filing of Application :11/11/2014
(21) Application No.9469/DELNP/2014 A
(43) Publication Date : 17/07/2015

(54) Title of the invention : METHODS AND DEVICES FOR SOFT TISSUE DISSECTION

(51) International classification :A61B17/3209
(31) Priority Document No :61/687587
(32) Priority Date :28/04/2012
(33) Name of priority country :U.S.A.
(86) International Application No :PCT/US2013/038673
Filing Date :29/04/2013
(87) International Publication No :WO 2013/163651
(61) Patent of Addition to Application Number :NA
Filing Date :NA
(62) Divisional to Application Number :NA
Filing Date :NA

(71)**Name of Applicant :**
**1)PHYSCIENT, INC.**
Address of Applicant :112 S. Duke Street, Durham, NC 27701 U.S.A.
(72)**Name of Inventor :**
**1)CRENSHAW ,Hugh Charles**
**2)PELL, Charles, Anthony**
**3)ESPENHAHN, Eric, Torr**
**4)MOODY, Ryan**

(57) Abstract :
A differential dissecting instrument for differentially dissecting complex tissue is disclosed. The differential dissecting instrument comprises a handle and an elongate member having a first end and a second end wherein the first end is connected to the handle. The differential dissecting instrument comprises a differential dissecting member configured to be rotatably attached to the second end and further comprises at least one tissue engaging surface. The differential dissecting instrument comprises a mechanism configured to mechanically rotate the differential dissecting member around an axis of rotation, thereby causing the at least one tissue engaging surface to move in at least one direction against the complex tissue. The at least one tissue engaging surface is configured to selectively engage the complex tissue such that the at least one tissue engaging surface disrupts at least one soft tissue in the complex tissue, but does not disrupt firm tissue in the complex tissue.

No. of Pages : 126 No. of Claims : 58

(12) PATENT APPLICATION PUBLICATION
(19) INDIA
(22) Date of filing of Application :11/11/2014
(21) Application No.9485/DELNP/2014 A
(43) Publication Date : 17/07/2015

(54) Title of the invention : TURBOCHARGER SHROUD WITH CROSS WISE GROOVES AND TURBOCHARGER INCORPORATING THE SAME

(51) International classification :F02B39/00,F02B37/00,F01D5/00
(31) Priority Document No :61/637146
(32) Priority Date :23/04/2012
(33) Name of priority country :U.S.A.
(86) International Application No :PCT/US2013/036089
Filing Date :11/04/2013
(87) International Publication No :WO 2013/162896
(61) Patent of Addition to Application Number :NA
Filing Date :NA
(62) Divisional to Application Number :NA
Filing Date :NA

(71)**Name of Applicant :**
**1)BORGWARNER, INC.**
Address of Applicant :Patent Department, 3850 Hamlin Road, Auburn Hills, Michigan 48326 U.S.A.
(72)**Name of Inventor :**
**1)DEXTRAZE, Stephanie**
**2)GRABOWSKA ,David G.**

(57) Abstract :
A turbocharger (5) comprising a housing (10) including a compressor shroud (14) and a turbine shroud (12). A compressor wheel (18) is disposed in the compressor shroud (14) and includes a plurality of compressor blades (45, 46). Each compressor blade (45 , 46) includes a leading edge (50 , 51) and a compressor shroud contour edge (54 , 55) , wherein each compressor shroud contour edge (54, 55) is in close confronting relation to the compressor shroud (14). A turbine wheel (16) is disposed in the turbine shroud (12) and includes a plurality of turbine blades (26). Each turbine blade (26) includes a leading edge (30) and a turbine shroud contour edge (34), wherein each turbine shroud contour edge (34) is in close confronting relation to the turbine shroud (12). At least one of the compressor shroud (14) and turbine shroud (12) includes a plurality of grooves (70, 72) extending cross wise with respect to the corresponding compressor or turbine shroud contour edges (34 , 54, 55).

No. of Pages : 23 No. of Claims : 15

(12) PATENT APPLICATION PUBLICATION
(19) INDIA
(22) Date of filing of Application :11/11/2014
(21) Application No.9486/DELNP/2014 A
(43) Publication Date : 17/07/2015

(54) Title of the invention : TURBINE HUB WITH SURFACE DISCONTINUITY AND TURBOCHARGER INCORPORATING THE SAME

(51) International classification :F02B39/00,F02B37/00,F01D5/00
(31) Priority Document No :61/637056
(32) Priority Date :23/04/2012
(33) Name of priority country :U.S.A.
(86) International Application No :PCT/US2013/036093
Filing Date :11/04/2013
(87) International Publication No :WO 2013/162897
(61) Patent of Addition to Application Number :NA
Filing Date :NA
(62) Divisional to Application Number :NA
Filing Date :NA

(71)**Name of Applicant :**
**1)BORGWARNER, INC.**
Address of Applicant :Patent Department, 3850 Hamlin Road, Auburn Hills, Michigan 48326 U.S.A.
(72)**Name of Inventor :**
**1)DEXTRAZE, Stephanie**

(57) Abstract :
A turbocharger (5) comprising a housing (10) including a compressor shroud (14) and a turbine shroud (12). The turbocharger (5) also includes a compressor wheel (18) and a turbine wheel (116 , 216 , 316 , 416). The compressor wheel (18) includes a compressor hub (44) and a plurality of circumferentially spaced compressor blades (45, 46) extending radially from the compressor hub (44). The turbine wheel (116 , 216 , 316 , 416) includes a turbine hub (124 ,224 , 324, 424) and a plurality of circumferentially spaced blades (126 , 226 , 326 , 426) extending radially from the turbine hub (124 , 224 ,324 ,424) with a hub surface (125 , 225, 325 , 425) extending between adjacent blades (126, 226, 326 , 426). The turbine wheel (116, 216 , 316 , 416) also includes at least one surface discontinuity (135, 235, 335 ,435) on the turbine hub surface (125, 225 ,325, 425).

No. of Pages : 23 No. of Claims : 15

(12) PATENT APPLICATION PUBLICATION
(19) INDIA
(22) Date of filing of Application :11/11/2014
(21) Application No.9487/DELNP/2014 A
(43) Publication Date : 17/07/2015

(54) Title of the invention : SOLAR THERMOSIPHON SYSTEM

(51) International classification :F24J2/34,F24J2/44
(31) Priority Document No :10 2012 015 984.6
(32) Priority Date :10/08/2012
(33) Name of priority country :Germany
(86) International Application No :PCT/EP2013/066736
Filing Date :09/08/2013
(87) International Publication No :WO 2014/023831
(61) Patent of Addition to Application Number :NA
Filing Date :NA
(62) Divisional to Application Number :NA
Filing Date :NA

(71)**Name of Applicant :**
**1)ROBERT BOSCH GMBH**
Address of Applicant :Postfach 30 02 20, 70442 Stuttgart Germany
(72)**Name of Inventor :**
**1)LUNZ, Karin**
**2)KEMP, Alexander**
**3)GACHIGNARD, Nelly**
**4)CLEMENT, Uwe**

(57) Abstract :
The invention relates to a solar thermosiphon system (1) for heating water, comprising a housing (2), in which a tank volume (3) is formed. The object of the invention is to provide a low- cost and robust thermosiphon system with high efficiency. The thermosiphon system (1) according to the invention is characterized in that in the housing (2) there is arranged a separating element (4), which separates the tank volume (3) into an absorber volume (6) and a reservoir volume (7) wherein the absorber volume (6) is arranged geodetically above the reservoir volume (7) in the operationally ready state of the thermosiphon system (1).

No. of Pages : 18 No. of Claims : 13

(12) PATENT APPLICATION PUBLICATION
(19) INDIA
(22) Date of filing of Application :11/11/2014
(21) Application No.9488/DELNP/2014 A
(43) Publication Date : 17/07/2015

(54) Title of the invention : REFRIGERATION SYSTEM WITH PURGE AND ACID FILTER

(51) International classification :F25B43/04,F25B43/00
(31) Priority Document No :61/640193
(32) Priority Date :30/04/2012
(33) Name of priority country :U.S.A.
(86) International Application No :PCT/US2013/038404
Filing Date :26/04/2013
(87) International Publication No :WO 2013/165843
(61) Patent of Addition to Application Number :NA
Filing Date :NA
(62) Divisional to Application Number :NA
Filing Date :NA

(71)**Name of Applicant :**
**1)TRANE INTERNATIONAL INC.**
Address of Applicant :One Centennial Avenue, Piscataway, NJ 08855 U.S.A.
(72)**Name of Inventor :**
**1)JANDAL Daoud Ali**
**2)MAJURIN, Julie, Ann**
**3)KUJAK, Stephen, Anthony**
**4)SCHAFER, Raymond, Scott**
**5)CIESLINSKI, Paul, Edmond**

(57) Abstract :
Refrigeration systems with a purge for removing non -condensables from the refrigerant and an acid filter for remove acid from the refrigerant are provided. The acid filter can be operatively connected to the purge. Optionally, the purge can include a separating device for separating non -condensable gases from condensable refrigerant gases and an acid filter is provided to remove acid from the condensable refrigerant gases.

No. of Pages : 24 No. of Claims : 21

(12) PATENT APPLICATION PUBLICATION
(19) INDIA
(22) Date of filing of Application :02/04/2012
(21) Application No.1023/DEL/2012 A
(43) Publication Date : 17/07/2015

(54) Title of the invention : ELECTRODE CUFFS

(51) International classification :H02N
(31) Priority Document No :NA
(32) Priority Date :NA
(33) Name of priority country :NA
(86) International Application No :NA
Filing Date :NA
(87) International Publication No :NA
(61) Patent of Addition to Application Number :NA
Filing Date :NA
(62) Divisional to Application Number :NA
Filing Date :NA

(71)**Name of Applicant :**
**1)BIO CONTROL MEDICAL (B.C.M.) LTD.**
Address of Applicant :2 GIRON STREET, YEHUD 56100, ISRAEL
(72)**Name of Inventor :**
**1)BEN-DAVID TAMIR**
**2)GAVISH NOAM**
**3)CZACZKES TSACHI**

(57) Abstract :
An electrode assembly (20) includes electrodes (22) and a cuff (24), shaped so as to define a tubular housing (28) that defines a longitudinal axis (40) therealong, two edges (30A, 30B), and a slit (42) between the two edges (30A, 30B). When the housing (28) is closed, respective contact surfaces (32A, 32B) of the two edges (30A, 30B) touch each other, and the housing (28) defines an inner surface (34) that faces and surrounds the axis (40), to which inner surface (34) the electrodes (22) are fixed. The cuff (24) further defines three or more annular insulating elements (50) that extend toward the axis (40) from the inner surface (34) of the housing (28) at respective longitudinal positions along the housing (28), such that the inner surface (34) of the housing (28) and pairs of the insulating elements (50) define, at respective longitudinal positions along the housing (28), respective chambers (52) open toward the axis (40). The housing (28) is shaped such that the contact surfaces (32A, 32B) of the two edges (30A, 30B) extend toward the axis (40) and protrude into the chambers (52).

No. of Pages : 26 No. of Claims : 26

(12) PATENT APPLICATION PUBLICATION
(21) Application No.1925/DEL/2012 A
(19) INDIA
(22) Date of filing of Application :22/06/2012
(43) Publication Date : 17/07/2015

(54) Title of the invention : POLY (DIMETHYL SILOXANE) BASED HYDROPHOBIC SELF CLEANING COATING WITH EPOXY ANTICORROSIVE COATINGS WITH EPOXY ANTICORROSIVE COATINGS AT SUBSTRATE SURFACE FROM SINGLE COAT APPLICATION

(51) International classification :C08F
(31) Priority Document No :NA
(32) Priority Date :NA
(33) Name of priority country :NA
(86) International Application No :NA
Filing Date :NA
(87) International Publication No : NA
(61) Patent of Addition to Application Number :NA
Filing Date :NA
(62) Divisional to Application Number :NA
Filing Date :NA

(71)**Name of Applicant :**
**1)DIRECTOR GENERAL, DEFENCE RESEARCH & DEVELOPMENT ORGANISATION**
Address of Applicant :MINISTRY OF DEFENCE, GOVT. OF INDIA, ROOM NO. 348, B-WING, DRDO BHAWAN, RAJAJI MARG, NEW DELHI 110 011 India
(72)**Name of Inventor :**
**1)NAIK; RUPESH SAGUN**
**2)PAWAR; SUSHIL SHANTARAM**
**3)MALVANKAR; NANDKISHOR GANPAT**
**4)MAHATO; TAPAN KUMAR**

(57) Abstract :
A self cleaning, self stratifying coating system comprising of pigmented hydroxy terminated poly (dimethyl siloxane) resin and pigmented epoxy resin. cured with a curing agent which on a single application over a given surface separates into desired coating layers so as to provide a self cleaning exterior layer.

No. of Pages : 29 No. of Claims : 10

(12) PATENT APPLICATION PUBLICATION
(21) Application No.2/DEL/2015 A
(19) INDIA
(22) Date of filing of Application :01/01/2015
(43) Publication Date : 17/07/2015

(54) Title of the invention : IMAGING LENS ASSEMBLY, IMAGING DEVICE AND MOBILE TERMINAL

(51) International classification :H04N5/225
(31) Priority Document No :103100925
(32) Priority Date :10/01/2014
(33) Name of priority country :Taiwan
(86) International Application No :NA
Filing Date :NA
(87) International Publication No : NA
(61) Patent of Addition to Application Number :NA
Filing Date :NA
(62) Divisional to Application Number :NA
Filing Date :NA

(71)**Name of Applicant :**
**1)LARGAN PRECISION CO., LTD.**
Address of Applicant :No. 11, Jingke Rd., Nantun District, Taichung City 408, Taiwan (R.O.C.).
(72)**Name of Inventor :**
**1)LIN-YAO LIAO**
**2)TSUNG-HAN TSAI**
**3)WEI-YU CHEN**

(57) Abstract :
An imaging lens assembly includes, in order from an object side to an image side, a first lens element, a second lens element, a third lens element, a fourth lens element, a fifth lens element, and a sixth lens element. The first element has refractive power. The second lens element has refractive power. The third lens element has positive refractive power. The fourth lens element has negative refractive power. The fifth lens element with refractive power has an image-side surface being concave in a paraxial region thereof. sixth lens element with refractive power has an image-side surface being concave in a paraxial region thereof, wherein the image-side surface of the sixth element has at least one convex shape in an off-axis region thereof. The imaging lens assembly has a total of six lens elements with refractive power.

No. of Pages : 79 No. of Claims : 28

(12) PATENT APPLICATION PUBLICATION
(19) INDIA
(22) Date of filing of Application :12/11/2014
(21) Application No.9502/DELNP/2014 A
(43) Publication Date : 17/07/2015

(54) Title of the invention : WATER QUENCH FOR GASIFIER

(51) International classification :F02C7/10,F02C1/06,F02C3/20
(31) Priority Document No :13/459897
(32) Priority Date :30/04/2012
(33) Name of priority country :U.S.A.
(86) International Application No :PCT/US2013/038781
Filing Date :30/04/2013
(87) International Publication No :WO 2013/165960
(61) Patent of Addition to Application Number :NA
Filing Date :NA
(62) Divisional to Application Number :NA
Filing Date :NA

(71)**Name of Applicant :**
**1)KELLOGG BROWN & ROOT LLC**
Address of Applicant :601 Jefferson Avenue, Houston, TX 77002 U.S.A.
(72)**Name of Inventor :**
**1)ABUGAHAZALEH ,John**
**2)SMITH, Peter, V.**
**3)STRAIT, Richard, B.**

(57) Abstract :
Systems and methods for gasifying a feedstock are provided. A feedstock can be introduced to a riser. A first oxidant can be introduced to a first mixing zone within the riser , thereby generating a first high temperature zone within the first mixing zone proximate an entry point of the first oxidant. A first stream of water can be introduced to the first high temperature zone to reduce the temperature therein. A second oxidant can be introduced to a second mixing zone within the riser , thereby generating a second high temperature zone within the second mixing zone proximate an entry point of the second oxidant. A second stream of water can be introduced to the second high temperature zone to reduce the temperature therein. The feedstock and the first and second oxidants can be gasified in a gasification zone within the riser.

No. of Pages : 28 No. of Claims : 20

(12) PATENT APPLICATION PUBLICATION
(21) Application No.2960/DEL/2012 A
(19) INDIA
(22) Date of filing of Application :21/09/2012
(43) Publication Date : 17/07/2015

(54) Title of the invention : FLAME RETARDANT COMPOSITION, FIBERS, PROCESS OF PREPARATON AND APPLICATIONS THEREOF

(51) International classification :C07C
(31) Priority Document No :NA
(32) Priority Date :NA
(33) Name of priority country :NA
(86) International Application No :NA
Filing Date :NA
(87) International Publication No : NA
(61) Patent of Addition to Application Number :NA
Filing Date :NA
(62) Divisional to Application Number :NA
Filing Date :NA

(71)**Name of Applicant :**
**1)DIRECTOR GENERAL, DEFENCE RESEARCH & DEVELOPMENT ORGANISATION**
Address of Applicant :MINISTRY OF DEFENCE, ROOM NO. 348, B-WING, DRDO BHAWAN, RAJAJI MARG, NEW DELHI-110011 (INDIA) India
(72)**Name of Inventor :**
**1)SAXENA, ARVIND KUMAR**
**2)NIGAM, VINEETA**
**3)KUMAR, SANDEEP**
**4)KERKETTA, ANJLINA**

(57) Abstract :
The present disclosure provides a flame retardant composition comprising Ultra High Molecular weight Polyethylene (UHMPE); and Polyphosphazene. The present disclosure also provides a flame retardant fibers comprising Ultra High Molecular weight Polyethylene (UHMPE); and Polyphosphazene. Further the present disclosure provides a process of melt spinning the flame retardant composition of UHMPE-PPZ to obtain flame retardant fibers. The flame retardant fibers of the present disclosure have various industrial and medicinal applications.

No. of Pages : 21 No. of Claims : 10

(12) PATENT APPLICATION PUBLICATION
(19) INDIA
(22) Date of filing of Application :10/11/2014
(21) Application No.3244/DEL/2014 A
(43) Publication Date : 17/07/2015

(54) Title of the invention : EIFS FORMULATIONS WITH ENHANCE RAIN RESISTANCE •

(51) International classification :c04b
(31) Priority Document No :61/914,003
(32) Priority Date :10/12/2013
(33) Name of priority country :U.S.A.
(86) International Application No :NA
Filing Date :NA
(87) International Publication No : NA
(61) Patent of Addition to Application Number :NA
Filing Date :NA
(62) Divisional to Application Number :NA
Filing Date :NA

(71)**Name of Applicant :**
**1)DOW GLOBAL TECHNOLOGIES LLC**
Address of Applicant :2040 Dow Center, Midland, Michigan 48674, USA
**2)ROHM AND HAAS COMPANY**
(72)**Name of Inventor :**
**1)MARGARITA PERELLO**
**2)JEFFREY J. SOBCZAK**
**3)MARK D. WESTMEYER**

(57) Abstract :
The present invention provides shelf-stable, non-cementitious dry mix compositions of inorganic non-cementious materials, such as sand, and water redispersible polymer powder (RDP) containing particles of a multi-stage acrylic copolymer having a calcium methacrylate salt group containing alkali-soluble resin outer stage and one or more inner stage, the particles further containing each of one or more nucleating agent having a boiling point of 150°C to 500°C and a water solubility of 3.5% or less, and one or more colloidal stabilizer, wherein the colloidal stabilizer and the multi-stage acrylic copolymer are contained in the same RDP particle.

No. of Pages : 30 No. of Claims : 9

(12) PATENT APPLICATION PUBLICATION
(21) Application No.3245/DEL/2014 A
(19) INDIA
(22) Date of filing of Application :10/11/2014
(43) Publication Date : 17/07/2015

(54) Title of the invention : DRIVE UNIT ASSEMBLY

(51) International classification :b60k
(31) Priority Document No :13193917.5
(32) Priority Date :21/11/2013
(33) Name of priority country :EUROPEAN UNION
(86) International Application No :NA
Filing Date :NA
(87) International Publication No : NA
(61) Patent of Addition to Application Number :NA
Filing Date :NA
(62) Divisional to Application Number :NA
Filing Date :NA

(71)**Name of Applicant :**
**1)MERITOR HEAVY VEHICLE SYSTEMS CAMERI SpA**
Address of Applicant :Strada Provinciale, Cameri-Bellinzago Km. 5, 28062 Cameri (Novara), Italy,
(72)**Name of Inventor :**
**1)MARCO BASSI**
**2)ROBERTO GIANONE**
**3)EUGENIO TIZIANI**

(57) Abstract :
A drive unit assembly including an input element, a first output element, a second output element and a drive unit housing containing a differential unit, the differential unit drivingly coupling the input element, the first output element and the second output element, the input element having input coupling features positioned externally of the drive unit housing, the first output element having output coupling features positioned externally of the drive unit housing, wherein the drive unit housing includes at least one mounting feature for securing the drive unit housing externally relative to an axle assembly and the second output element is suitable for driving an axle assembly.

No. of Pages : 23 No. of Claims : 18

(12) PATENT APPLICATION PUBLICATION
(21) Application No.621/DEL/2012 A
(19) INDIA
(22) Date of filing of Application :02/03/2012
(43) Publication Date : 17/07/2015

(54) Title of the invention : MICROBIOCIDAL PYRAZOLE DERIVATIVES

(51) International classification :C07C
(31) Priority Document No :NA
(32) Priority Date :NA
(33) Name of priority country :NA
(86) International Application No :NA
Filing Date :NA
(87) International Publication No : NA
(61) Patent of Addition to Application Number :NA
Filing Date :NA
(62) Divisional to Application Number :NA
Filing Date :NA

(71)**Name of Applicant :**
**1)Syngenta Participations AG**
Address of Applicant :Schwarzwaldallee 215 CH-4058 Basel Switzerland.
(72)**Name of Inventor :**
**1)MOSSE-Sulzer Sarah**
**2)LAMBERTH Clemens**
**3)CEDERBAUM Fredrik**
**4)SONAWANE Ravindra**
**5)UMARYE Jayant**

(57) Abstract :
Compounds of the formula I wherein the substituents are as defined in claim 1, are useful as a pesticides

No. of Pages : 62 No. of Claims : 12

(12) PATENT APPLICATION PUBLICATION
(19) INDIA
(22) Date of filing of Application :11/11/2014
(21) Application No.9493/DELNP/2014 A
(43) Publication Date : 17/07/2015

(54) Title of the invention : APPARATUS AND METHODS FOR MICROBIOLOGICAL ANALYSIS

(51) International classification :G01N33/68
(31) Priority Document No :61/687785
(32) Priority Date :01/05/2012
(33) Name of priority country :U.S.A.
(86) International Application No :PCT/US2013/039094
Filing Date :01/05/2013
(87) International Publication No :WO 2013/166169
(61) Patent of Addition to Application Number :NA
Filing Date :NA
(62) Divisional to Application Number :NA
Filing Date :NA

(71)**Name of Applicant :**
**1)STEPHENSON, James, L., Jr.**
Address of Applicant :11941 Straight-A-Way Lane, Raleigh, NC 27613 U.K.
(72)**Name of Inventor :**
**1)STEPHENSON, James L. Jr.**
**2)GVOZDYAK ,Oksana**
**3)GRIST, Roger**
**4)CAMPBELL, Clay**
**5)JARDINE, Ian, D.**
**6)MYLCHREEST, Iain C.**

(57) Abstract :
Methods and systems for identification of microorganisms either after isolation from a culture or directly from a sample. The methods and systems are configured to identify microorganisms based on the characterization of proteins of the microorganisms via high-resolution/mass accuracy single -stage (MS) or multi- stage (MS) mass spectrometry. Included herein are also discussion of targeted detection and evaluation of virulence factors , antibiotic resistance, markers antibiotic, susceptibility markers typing , or other characteristics using, a method applicable to substantially all microorganisms and high- resolution/mass accuracy single -stage (MS) or multi -stage (MS) mass spectrometry.

No. of Pages : 70 No. of Claims : 31

(12) PATENT APPLICATION PUBLICATION
(21) Application No.9494/DELNP/2014 A
(19) INDIA
(22) Date of filing of Application :12/11/2014
(43) Publication Date : 17/07/2015

(54) Title of the invention : THIOETHER FUNCTIONAL OLIGOMERIC POLYTHIOLS AND ARTICLES PREPARED THEREFROM •

| | |
|---|---|
| (51) International classification | :C08G75/04, C09D175/00 |
| (31) Priority Document No | :60/797,985 |
| (32) Priority Date | :05/05/2006 |
| (33) Name of priority country | :U.S.A. |
| (86) International Application No | :PCT/US2007/068205 |
| Filing Date | :04/05/2007 |
| (87) International Publication No | :wo 2007/131149 |
| (61) Patent of Addition to Application Number | :NA |
| Filing Date | :NA |
| (62) Divisional to Application Number | :9055/DELNP/2008 |
| Filed on | :29/10/2008 |

(71)**Name of Applicant :**
**1)PPG INDUSTRIES OHIO, INC.**
Address of Applicant :3800 West 143rd Street, Cleveland, Ohio 44111, United States of America
(72)**Name of Inventor :**
**1)BOJKOVA, Nina, V.**

(57) Abstract :
Provided is a thioether-functional, oligomeric polythiol having pendant hydroxyl functional groups, prepared by reacting together: (a) a compound having at least two thiol functional groups; and (b) a hydroxyl functional compound having triple bond functionality. Also provided are optical articles prepared from the reaction product of: (A) a reactive compound having functional groups that are reactive with active hydrogens; (B) a thioether-functional, oligomeric polythiol; and, optionally, (C) a compound different from (B) containing active hydrogens.

No. of Pages : 74 No. of Claims : 15

(12) PATENT APPLICATION PUBLICATION
(21) Application No.9473/DELNP/2014 A
(19) INDIA
(22) Date of filing of Application :11/11/2014
(43) Publication Date : 17/07/2015

(54) Title of the invention : INTELLIGENT CROSSROAD PARKING MULTICROSS STRAIGHT CHAIN HUB TYPE PENDULUM FLYOVER

| | | |
|---|---|---|
| (51) International classification | :E01C1/04 | (71)**Name of Applicant :** |
| (31) Priority Document No | :201210132315.2 | **1)LEUNG Valiant Yuk Yuen** |
| (32) Priority Date | :28/04/2012 | Address of Applicant :No.33 The First Floor Middle of |
| (33) Name of priority country | :China | Taifeng Industrial Road Xiaolan Town Zhongshan Guangdong |
| (86) International Application No | :PCT/CN2012/076825 | 528415 China |
| Filing Date | :13/06/2012 | (72)**Name of Inventor :** |
| (87) International Publication No | :WO 2013/159434 | **1)LEUNG Valiant Yuk Yuen** |
| (61) Patent of Addition to Application Number | :NA | |
| Filing Date | :NA | |
| (62) Divisional to Application Number | :NA | |
| Filing Date | :NA | |

(57) Abstract :
An intelligent crossroad parking multicross straight chain hub -type pendulum flyover comprises a main road (1) and a subsidiary road (2), which cross at a roundabout (3). The main road (1) and the subsidiary road (2) are provided thereon with a crisscrossing viaduct (10), and the crisscrossing viaduct (10) comprises a two- way bridge (11) and a one- way bridge (12). The outer sides of the main road (1) and the subsidiary road (2) are both provided with a pavement (114), and an overhead bicycle lane (101) is arranged above the pavement (114). An overhead bicycle parking floor (102) is arranged between the roundabout (3) and the crisscrossing viaduct (10). A plurality of bus stations (4) are arranged in the middle of the roundabout (3). An underground first floor is arranged below the main road (1) and the subsidiary road (2), and the underground first floor is provided thereon with a floor consisting of a parking lot (214). The main road (1) is provided thereon with a floor consisting of a main connected driveway, (212) and the subsidiary road (2) is provided thereon with a floor consisting of a subsidiary connected driveway (216). The outer side of the roundabout (3) is provided with a taxi stand (106) and outside pedestrian stairs (107) and the entrance and exit of the outside pedestrian stairs are connected to the ground- level taxi stand (106). It can be achieved to go forwards backwards leftwards and rightwards and not go i.e. park on the flyover, thereby being able to effectively solve the problems of traffic jams and difficult parking of urban developments.

No. of Pages : 23 No. of Claims : 8

(12) PATENT APPLICATION PUBLICATION
(21) Application No.9474/DELNP/2014 A
(19) INDIA
(22) Date of filing of Application :11/11/2014
(43) Publication Date : 17/07/2015

(54) Title of the invention : METHOD AND APPARATUS FOR GENERATING DEDICATED DATA CHANNELS IN INDUCTIVE COUPLED RFID SYSTEMS USING BAND PASS MODULATION

| | |
|---|---|
| (51) International classification | :H04B1/59,G06K7/08,H01F38/14 |
| (31) Priority Document No | :13/482083 |
| (32) Priority Date | :29/05/2012 |
| (33) Name of priority country | :U.S.A. |
| (86) International Application No | :PCT/CA2012/000569 |
| Filing Date | :11/06/2012 |
| (87) International Publication No | :WO 2013/177659 |
| (61) Patent of Addition to Application Number | :NA |
| Filing Date | :NA |
| (62) Divisional to Application Number | :NA |
| Filing Date | :NA |

(71)**Name of Applicant :**
**1)TAG COMM INC.**
Address of Applicant :263 Lion's Court, Waterloo, Ontario N2L 1S3 Canada
(72)**Name of Inventor :**
**1)MANKU, Tajinder**

(57) Abstract :
An inductive coupling apparatus for modifying an incoming radio frequency (RF) signal includes an inductive element. A variable impedance circuit includes an output electrically coupled to the inductive element. A band -pass delta sigma modulator is coupled to the variable impedance circuit and digitally controls the output of the variable impedance circuit. The incoming RF signal is modified as the coupled impedance of the inductive element is adjusted in accordance with the output of the variable impedance circuit.

No. of Pages : 31 No. of Claims : 16

(12) PATENT APPLICATION PUBLICATION
(19) INDIA
(22) Date of filing of Application :11/11/2014
(21) Application No.9475/DELNP/2014 A
(43) Publication Date : 17/07/2015

(54) Title of the invention : APPARATUS FOR GENERATING DEDICATED DATA CHANNELS IN BACKSCATTER RFID SYSTEM USING BAND PASS DELTA SYGMA MODULATOR

(51) International classification :H04B1/59,H03M7/32,H04B7/005
(31) Priority Document No :13/470472
(32) Priority Date :14/05/2012
(33) Name of priority country :U.S.A.
(86) International Application No :PCT/CA2012/000570
Filing Date :11/06/2012
(87) International Publication No :WO 2013/170338
(61) Patent of Addition to Application Number :NA
Filing Date :NA
(62) Divisional to Application Number :NA
Filing Date :NA

(71)**Name of Applicant :**
**1)TAG- COMM INC.**
Address of Applicant :263 Lion's Court, Waterloo, Ontario N2L 1S3 Canada
(72)**Name of Inventor :**
**1)MANKU, Tajinder**

(57) Abstract :
A communication apparatus comprising an antenna for backscattering an incoming RF signal in accordance with a reflection coefficient of the antenna. The communication apparatus comprises at least one band- pass delta sigma modulator which modulates the signal at its input and digitally controls the output of a variable impedance circuit, wherein the reflection coefficient of the antenna is varied based on the output of the variable impedance circuit. This communication device can be used in applications such as RFTD tags.

No. of Pages : 28 No. of Claims : 15

(12) PATENT APPLICATION PUBLICATION
(19) INDIA
(22) Date of filing of Application :11/11/2014
(21) Application No.9476/DELNP/2014 A
(43) Publication Date : 17/07/2015

(54) Title of the invention : APPARATUS FOR GENERATING DEDICATED DATA CHANNELS IN INDUCTIVE COUPLED RFID

(51) International classification :H04B1/59,H01F38/14,H03M7/32
(31) Priority Document No :13/482008
(32) Priority Date :29/05/2012
(33) Name of priority country :U.S.A.
(86) International Application No :PCT/CA2012/000568
Filing Date :11/06/2012
(87) International Publication No :WO 2013/177658
(61) Patent of Addition to Application Number :NA
Filing Date :NA
(62) Divisional to Application Number :NA
Filing Date :NA

(71)**Name of Applicant :**
**1)TAG- COMM INC.**
Address of Applicant :263 Lion's Court, Waterloo, Ontario N2L 1S3 Canada
(72)**Name of Inventor :**
**1)MANKU, Tajinder**

(57) Abstract :
An inductive coupling apparatus for modifying an incoming radio frequency (RF) signal includes an inductive element for modifying the incoming RF signal in accordance with a coupled impedance characteristic of the inductive element. A variable impedance circuit includes an output electrically coupled to the inductive element. A low pass delta sigma modulator is coupled to the variable impedance circuit and digitally controls the output of the variable impedance circuit the coupled impedance of the inductive element being adjusted based on the output of the variable impedance circuit.

No. of Pages : 27 No. of Claims : 21

(12) PATENT APPLICATION PUBLICATION
(19) INDIA
(22) Date of filing of Application :10/11/2014
(21) Application No.9443/DELNP/2014 A
(43) Publication Date : 17/07/2015

(54) Title of the invention : BIOCIDAL COMPOUNDS AND METHODS FOR USING SAME

(51) International classification :C07D403/12,A01N43/50,A01N43/647
(31) Priority Document No:61/648167
(32) Priority Date :17/05/2012
(33) Name of priority country :U.S.A.
(86) International Application No :PCT/CA2013/000491
Filing Date :16/05/2013
(87) International Publication No :WO 2013/173905
(61) Patent of Addition to Application Number :NA
Filing Date :NA
(62) Divisional to Application Number :NA
Filing Date :NA

(71)**Name of Applicant :**
**1)UNIVERSITY OF MANITOBA**
Address of Applicant :Technology Transfer Office, 631 Drake Centre, 181 Freedman Crescent, Winnipeg, Manitoba R3T 5V4 Canada
(72)**Name of Inventor :**
**1)LIU, Song**

(57) Abstract :
Biocidally active cationic analogs of N- halamine having two biocidally active groups covalently bonded together in a single molecule and having general Formula (I). Compounds of Formula (I) and precursurs thereof- can be in solution form immobilized onto a substrate via physical coating or covalent chemical bonding to functionalize surfaces or added into materials as additives so as to render them biocidal. The biocidal solutions and substrates comprising the compounds or precursors of the present invention can then be used to inactivate pathogenic microorganisms. N -halamine L- QUAT (I) wherein: the N- halamine may be a cyclic or acyclic N- halamine; L is C1- C6 alkyl cyclic aromatic or non aromatic ring ether ketone or any other organic linking structures and QUAT has general formula ( II):

No. of Pages : 99 No. of Claims : 38

(12) PATENT APPLICATION PUBLICATION
(19) INDIA
(22) Date of filing of Application :10/11/2014
(21) Application No.9445/DELNP/2014 A
(43) Publication Date : 17/07/2015

(54) Title of the invention : CONFORMATIONALLY SPECIFIC VIRAL IMMUNOGENS

(51) International classification :A61K39/12,A61K39/42,C12N7/01
(31) Priority Document No :61/644830
(32) Priority Date :09/05/2012
(33) Name of priority country :U.S.A.
(86) International Application No :PCT/US2013/040228
Filing Date :09/05/2013
(87) International Publication No :WO 2013/169961
(61) Patent of Addition to Application Number :NA
Filing Date :NA
(62) Divisional to Application Number :NA
Filing Date :NA

(71)**Name of Applicant :**
**1)MARSHALL, Christophe,r Patrick**
Address of Applicant :140 58th Street Building A, Unit 8j, Brooklyn, New York, NY 10023 5850 U.S.A.
(72)**Name of Inventor :**
**1)MARSHALL, Christopher, Patrick**

(57) Abstract :
The present invention provides methods of making engineered viral proteins and protein complexes that are useful as vaccine immunogens, engineered viral proteins and protein complexes made using such methods, and pharmaceutical compositions comprising such engineered viral proteins and protein complexes. Such engineered viral proteins and protein complexes may comprise one or more cross -links that stabilize the conformation of an antibody epitope, such as a quaternary neutralizing antibody, and may exhibit an enhanced ability to elicit a protective immune response when administered to a subject as a component of a vaccine.

No. of Pages : 74 No. of Claims : 22

(12) PATENT APPLICATION PUBLICATION
(21) Application No.9446/DELNP/2014 A
(19) INDIA
(22) Date of filing of Application :10/11/2014
(43) Publication Date : 17/07/2015

(54) Title of the invention : DEVICE AND METHOD FOR ACTIVE CONTROL OF A FORCE FEEDBACK FOR A CONTROL DEVICE

(51) International classification :B64C13/04,B64C13/46,G06F3/01
(31) Priority Document No :1253482
(32) Priority Date :16/04/2012
(33) Name of priority country :France
(86) International Application No :PCT/EP2013/057842
Filing Date :15/04/2013
(87) International Publication No :WO 2013/156451
(61) Patent of Addition to Application Number :NA
Filing Date :NA
(62) Divisional to Application Number :NA
Filing Date :NA

(71)**Name of Applicant :**
**1)SAGEM DEFENSE SECURITE**
Address of Applicant :18 20 Quai du Point du Jour F 92100 Boulogne Billancourt France
(72)**Name of Inventor :**
**1)BEGGIORA, Geoffrey**
**2)PIATON, Jr´me**
**3)MERCIER, Guillaume**
**4)VANDENBAVIERE, Yann**

(57) Abstract :
The invention concerns a device for the active control of a force feedback for a control device comprising a calculator, a position sensor (3) configured to provide the calculator with an effective position signal (Pm) of the control device and an actuator (2) ensuring the displacement of the control device at the command of the calculator the calculator being configured to use the effective position signal and modulate a setpoint current (lc) delivered to the actuator to ensure the position feedback of the displacement of the control device, characterised in that the calculator is further configured to create at least one saturation terminal (Bsat+ Bsat- ) according to a predetermined function of the value of the effective position signal of the position/force law kind , and to saturate the setpoint current using the at least one saturation terminal.

No. of Pages : 20 No. of Claims : 10

(12) PATENT APPLICATION PUBLICATION
(19) INDIA
(22) Date of filing of Application :10/11/2014
(21) Application No.9447/DELNP/2014 A
(43) Publication Date : 17/07/2015

(54) Title of the invention : MEMBRANE FOR A PRESSURE MEASURING DEVICE

(51) International classification :G01L19/06,F23Q7/00,G01L19/14
(31) Priority Document No :10 2012 207 856.8
(32) Priority Date :11/05/2012
(33) Name of priority country :Germany
(86) International Application No :PCT/EP2013/058941
Filing Date :30/04/2013
(87) International Publication No :WO 2013/167421
(61) Patent of Addition to Application Number :NA
Filing Date :NA
(62) Divisional to Application Number :NA
Filing Date :NA

(71)**Name of Applicant :**
**1)ROBERT BOSCH GMBH**
Address of Applicant :Postfach 30 02 20 70442 Stuttgart Germany
(72)**Name of Inventor :**
**1)HAUBER, Thomas**
**2)WOLFF, Janpeter**
**3)GUGEL, Denis**
**4)LEOPOLD, Stefan**
**5)KOETZLE, Wolfgang**

(57) Abstract :
The invention relates to a resilient membrane (1) for a pressure measuring device for determining a pressure in a combustion chamber of an internal combustion engine particularly a self- igniting internal combustion engine, wherein the membrane is received in a housing (2) of the pressure measuring device in order to separate a pressure chamber (3) from a cavity (4) and to seal the housing against the pressure to be measured. The membrane has a pressurised region. In addition the membrane has an annular design and has a U- shape that is open to the cavity in a cross -section wherein the pressurised region of the membrane is geometrically formed by two quarter- circles connected to each other such that the pressurised region has a self- supporting structure against occurring pressure loads.

No. of Pages : 15 No. of Claims : 9

(12) PATENT APPLICATION PUBLICATION
(19) INDIA
(22) Date of filing of Application :28/03/2012
(21) Application No.932/DEL/2012 A
(43) Publication Date : 17/07/2015

(54) Title of the invention : LASER PROXIMITY FUSE •

(51) International classification :G11B
(31) Priority Document No :NA
(32) Priority Date :NA
(33) Name of priority country :NA
(86) International Application No :NA
Filing Date :NA
(87) International Publication No : NA
(61) Patent of Addition to Application Number :NA
Filing Date :NA
(62) Divisional to Application Number :NA
Filing Date :NA

(71)**Name of Applicant :**
**1)DIRECTOR GENERAL DEFENCE RESEARCH & DEVELOPMENT ORGANISATION**
Address of Applicant :Ministry of Defence Govt. of India Room No 531 B-Wing DRDO Bhawan Rajaji Marg New Delhi 110105 India
(72)**Name of Inventor :**
**1)Devinder Pal Ghai**
**2)Anuya Venkatesh**
**3)Anjesh Kumar**
**4)Het Ram Swami**

(57) Abstract :
The present invention relates to a proximity detection system, comprising: a transmitter section for emitting two laser beams towards a target; two receiver sections for simultaneously receiving and detecting light scattered from two different points on the target illuminated by the transmitted beams; and a control unit for processing the said reflected light and detecting the presence of the target.

No. of Pages : 16 No. of Claims : 5

(12) PATENT APPLICATION PUBLICATION
(19) INDIA
(22) Date of filing of Application :12/11/2014
(21) Application No.9525/DELNP/2014 A
(43) Publication Date : 17/07/2015

(54) Title of the invention : HIGH MELT STRENGTH POLYPROPYLENE OF IMPROVED QUALITY

(51) International classification :C08L23/10,C08J5/18,C08F110/06
(31) Priority Document No :12174070.8
(32) Priority Date :28/06/2012
(33) Name of priority country :EPO
(86) International Application No :PCT/EP2013/063400
Filing Date :26/06/2013
(87) International Publication No :WO 2014/001394
(61) Patent of Addition to Application Number :NA
Filing Date :NA
(62) Divisional to Application Number :NA
Filing Date :NA

(71)**Name of Applicant :**
**1)BOREALIS AG**
Address of Applicant :IZD Tower, Wagramerstrae 17- 19, A-1220 Vienna Austria
(72)**Name of Inventor :**
**1)KLIMKE, Katja**
**2)BRAUN ,Hermann**

(57) Abstract :
Use of an additive mixture containing a linear polypropylene and at least one additive in a polypropylene composition comprising said additive mixture and a branched polypropylene to reduce the gel index of said polypropylene composition.

No. of Pages : 36 No. of Claims : 19

(12) PATENT APPLICATION PUBLICATION
(21) Application No.9526/DELNP/2014 A
(19) INDIA
(22) Date of filing of Application :12/11/2014
(43) Publication Date : 17/07/2015

(54) Title of the invention : A METHOD AND COMPUTER PROGRAM PRODUCT FOR TASK MANAGEMENT ON LATE CLINICAL INFORMATION

(51) International classification :G06F19/00
(31) Priority Document No :12170796.2
(32) Priority Date :05/06/2012
(33) Name of priority country :EPO
(86) International Application No :PCT/EP2013/061393
Filing Date :03/06/2013
(87) International Publication No :WO 2013/182526
(61) Patent of Addition to Application Number :NA
Filing Date :NA
(62) Divisional to Application Number :NA
Filing Date :NA

(71)**Name of Applicant :**
**1)AGFA HEALTHCARE**
Address of Applicant :IP Department 3802, Septestraat 27, B-Mortsel 2640 Belgium
(72)**Name of Inventor :**
**1)FELIX, Joost**
**2)DEBELS, Olivier**
**3)KIECKENS, Wannes**

(57) Abstract :
When standardized messages comprising additional clinical information are received (101; 201) by a system for task management on clinical information the system shall use the metadata of the standardized messages to automatically verify (102; 203) if a report already exists for the medical procedure where the additional clinical information belongs to. When a report already exists, a workflow engine is triggered to automatically create (103; 204) in the system a task for the author of the report to verify the existing report in view of the additional clinical information received. Thereby , the sending of manually entered notifications by e mail or sms is avoided.

No. of Pages : 17 No. of Claims : 11

(12) PATENT APPLICATION PUBLICATION
(19) INDIA
(22) Date of filing of Application :12/11/2014
(21) Application No.9527/DELNP/2014 A
(43) Publication Date : 17/07/2015

(54) Title of the invention : ROTARY PISTON ENGINE

(51) International classification :F01C1/28,F01C1/36,F02B53/00
(31) Priority Document No :12/54259
(32) Priority Date :10/05/2012
(33) Name of priority country :France
(86) International Application No:PCT/FR2013/051021
Filing Date :07/05/2013
(87) International Publication No :WO 2013/167843
(61) Patent of Addition to Application Number :NA
Filing Date :NA
(62) Divisional to Application Number :NA
Filing Date :NA

(71)**Name of Applicant :**
**1)GRUET, William**
Address of Applicant :97 rue des Chantiers, F -78880 Versailles, France
(72)**Name of Inventor :**
**1)GRUET, William**

(57) Abstract :
The present invention relates to a so- called rotary piston engine or pump, which includes a shape F that is rotationally symmetrical relative to a delta axis and which is rotatably movable about said delta axis relative to a casing V, wherein n cavities are distributed along the perimeter of F. A rotating roller is accommodated in each cavity , characterized in that the angle formed by at least one roller with the center is determined so as to form the closed spaces defined thereby such that they are as large as possible.

No. of Pages : 29 No. of Claims : 11

(12) PATENT APPLICATION PUBLICATION
(21) Application No.9528/DELNP/2014 A
(19) INDIA
(22) Date of filing of Application :12/11/2014
(43) Publication Date : 17/07/2015

(54) Title of the invention : SEAMLESS STEEL PIPE AND METHOD FOR MANUFACTURING SAME

(51) International classification :C22C38/00,C21D8/10,C21D9/08
(31) Priority Document No :2012103838
(32) Priority Date :27/04/2012
(33) Name of priority country :Japan
(86) International Application No :PCT/JP2013/060828
Filing Date :10/04/2013
(87) International Publication No :WO 2013/161567
(61) Patent of Addition to Application Number :NA
Filing Date :NA
(62) Divisional to Application Number :NA
Filing Date :NA

(71)**Name of Applicant :**
**1)NIPPON STEEL & SUMITOMO METAL CORPORATION**
Address of Applicant :6- 1 Marunouchi 2- chome Chiyoda -ku, Tokyo 100-8071 Japan
(72)**Name of Inventor :**
**1)UEDA, Yukimasa**
**2)ARAI, Yuji**

(57) Abstract :
Provided is a seamless steel pipe having high strength and toughness even with thick walls. This seamless steel pipe contains C in an amount of 0.03 to 0.08% Si in an amount of 0.25% or less, Mn in an amount of 0.3 to 2.0% , P in an amount of 0.05% ,or less S in an amount of 0.005% or less , Al in an amount of 0.001 to 0.10%, Cr in an amount of 0.02 to 1.0% , Ni in an amount of 0.02 to 1.0% , Mo in an amount of 0.02 to 0.8% , N in an amount of 0.002 to 0.008% , Ca in an amount of 0.0005 to 0.005% , and Nb in an amount of 0.01 to 0.1% (amounts given in percent by mass) the remainder comprising Fe and impurities and the wall thickness being 50 mm or more. In a cross section orthogonal to the axial direction of the seamless steel pipe , the average crystal grain size of old austenite grains is less than 80 m in a surface layer section , which is a 500—500 m area centered around a position 2 mm below the surface and there is a difference of less than 50 m between the average crystal grain size of old austenite grains in the surface layer section and the average crystal grain size of old austenite grains in a thick wall center section , which is a 500—500 m area centered around a center position of the thick wall in the cross section.

No. of Pages : 56 No. of Claims : 6

(12) PATENT APPLICATION PUBLICATION
(21) Application No.2158/DEL/2009 A
(19) INDIA
(22) Date of filing of Application :16/10/2009
(43) Publication Date : 17/07/2015

(54) Title of the invention : PH SENSITIVE CONTROLLED RELEASE MICROCAPSULES AND A PROCESS OF PREPARATION OF THE SAME

(51) International classification :A61K9/28
(31) Priority Document No :NA
(32) Priority Date :NA
(33) Name of priority country :NA
(86) International Application No :NA
Filing Date :NA
(87) International Publication No : NA
(61) Patent of Addition to Application Number :NA
Filing Date :NA
(62) Divisional to Application Number :NA
Filing Date :NA

(71)**Name of Applicant :**
**1)Director General Defence Research & Development Organisation**
Address of Applicant :Ministry of Defence Government of India Room No. 348 B-Wing DRDO Bhavan Rajaji Marg New Delhi - 110011 India
(72)**Name of Inventor :**
**1)Chilamala Suryanarayana**
**2)Sushil Shantaram Pawar**
**3)Kasai Chodoji Rao**
**4)Dhirendra Kumar**

(57) Abstract :
The invention relates to pH sensitive controlled release microcapsules which can release when exposed to an alkaline environment. Microcapsules were prepared by solvent evaporation from oil-in-water emulsion using thermoplastic polytner, acid functional compound, organic solvent, emulsifier and core material. Micropores develop on the surface of the microcapsules when exposed to alkaline environment. Pore density and pore size of micropores are directly proportional to the quantity of acid functional compound in the shell of the niicrocapsule. Thus the release rate of core material can be controlled by varying the content of the acid functional compound in the shell of the microcapsules.

No. of Pages : 16 No. of Claims : 15

(12) PATENT APPLICATION PUBLICATION
(19) INDIA
(22) Date of filing of Application :18/12/2012
(21) Application No.3909/DEL/2012 A
(43) Publication Date : 17/07/2015

(54) Title of the invention : NANOMATERIALS BASED DECONTAMINATION FORMULATION

(51) International classification :C07C
(31) Priority Document No :NA
(32) Priority Date :NA
(33) Name of priority country :NA
(86) International Application No :NA
Filing Date :NA
(87) International Publication No : NA
(61) Patent of Addition to Application Number :NA
Filing Date :NA
(62) Divisional to Application Number :NA
Filing Date :NA

(71)**Name of Applicant :**
**1)DIRECTOR GENERAL, DEFENCE RESEARCH & DEVELOPMENT ORGANISATION**
Address of Applicant :MINISTRY OF DEFENCE, GOVT OF INDIA DRDO BHAWAN, RAJAJI MARG, NEW DELHI-110066, INDIA
(72)**Name of Inventor :**
**1)PRASAD, GANGAVARAPU KRISHNA**
**2)GAUTAM, ANSHOO**
**3)SINGH, BEER,**
**4)KAUSHIK, MAHABIR, PARSHAD**

(57) Abstract :
The present invention relates to the field of decontaminating composition effective for the decontamination of any material, equipment or any personnel exposed to toxic chemical agents like chemicals warfare (CW) agents, industrial chemicals, insecticides and the like. More particularly, the present invention provides an adsorbent decontamination formulation comprising nanosized metal oxide for the decontamination of chemical warfare agents such as sulphur mustard. The proposed composition advantageously enables decontamination of an object surface more than about 99% within a minute and simultaneously the composition causes chemical degradation of about 90% of the adsorbed contaminant within 24 hours. The invention further extends to provide a decontamination kit based on the above adsorbent decontamination formulation.

No. of Pages : 21 No. of Claims : 12

(12) PATENT APPLICATION PUBLICATION
(21) Application No.581/DEL/2012 A
(19) INDIA
(22) Date of filing of Application :01/03/2012
(43) Publication Date : 17/07/2015

(54) Title of the invention : METHOD OF INSTALLING BURNER AND / OR INJECTOR PANEL APPARATUS AND METHO OF TREATING METAL USING THE SAME

(51) International classification :B23B
(31) Priority Document No :13/038,315
(32) Priority Date :01/03/2011
(33) Name of priority country :U.S.A.
(86) International Application No :NA
Filing Date :NA
(87) International Publication No :NA
(61) Patent of Addition to Application Number :NA
Filing Date :NA
(62) Divisional to Application Number :NA
Filing Date :NA

(71)**Name of Applicant :**
**1)AIR LIQUIDE ADVANCED TECHNOLOGIES U.S.LLC**
Address of Applicant :200 GBC DR, NEWARK, DE 19702, U.S.A.
(72)**Name of Inventor :**
**1)EYFA YURY**
**2)HIGGINS CHRISTOPHER**

(57) Abstract :
A burner and/or injector panel apparatus includes a main body connected to a flange. The flange rests above a circular opening in a furnace ceiling cooling panel while the main body extends downwardly through the opening. A burner and/or injector is inserted in a chamber within the main body that is adapted to inject at least one of a flame, a jet of oxygen, and a stream of carbon particles into a target area of the furnace. The connected flange and main body is rotatable and tiltable so as to optimally point the burner and/or injector towards the target area.

No. of Pages : 39 No. of Claims : 14

(12) PATENT APPLICATION PUBLICATION
(19) INDIA
(22) Date of filing of Application :12/11/2014
(21) Application No.9530/DELNP/2014 A
(43) Publication Date : 17/07/2015

(54) Title of the invention : RADIATION CURABLE FLUIDS

(51) International classification :C09D11/10,C09D11/00
(31) Priority Document No :12175710.8
(32) Priority Date :10/07/2012
(33) Name of priority country :EPO
(86) International Application No :PCT/EP2013/062510
Filing Date :17/06/2013
(87) International Publication No :WO 2014/009106
(61) Patent of Addition to Application Number :NA
Filing Date :NA
(62) Divisional to Application Number :NA
Filing Date :NA

(71)**Name of Applicant :**
**1)AGFA GRAPHICS NV**
Address of Applicant :IP Department 3622, Septestraat 27, B-2640 Mortsel Belgium
(72)**Name of Inventor :**
**1)ANDRE, Xavier**

(57) Abstract :
A radiation curable fluid including a vinylether (meth)acrylate monomer; a compound having a sulfonic acid group; and a polymeric dispersant with heterocyclic groups having hetero atoms consisting of one or two nitrogen atoms.

No. of Pages : 34 No. of Claims : 15

(12) PATENT APPLICATION PUBLICATION
(19) INDIA
(22) Date of filing of Application :12/11/2014
(21) Application No.9531/DELNP/2014 A
(43) Publication Date : 17/07/2015

(54) Title of the invention : ELECTRO HYDRAULIC ACTUATED SPRAY GUNS

(51) International classification :E01C23/16,A63C19/06
(31) Priority Document No :61/645274
(32) Priority Date :10/05/2012
(33) Name of priority country :U.S.A.
(86) International Application No :PCT/US2013/040386
Filing Date :09/05/2013
(87) International Publication No :WO 2013/170058
(61) Patent of Addition to Application Number :NA
Filing Date :NA
(62) Divisional to Application Number :NA
Filing Date :NA

(71)**Name of Applicant :**
**1)GRACO MINNESOTA INC.**
Address of Applicant :88- 11th Avenue NE, Minneapolis, Minnesota 55413 U.S.A.
(72)**Name of Inventor :**
**1)SCHROEDER, James C.**
**2)LINS ,Christopher A.**
**3)KUCZENSKI ,Steven R.**

(57) Abstract :
An electro- hydraulic actuation system for a sprayer comprises a hydraulic system , a hydraulic actuator , an electric actuator and a sprayer. The hydraulic system is for pressurizing a hydraulic fluid. The hydraulic actuator is powered by the hydraulic system. The electric actuator controls actuation of the hydraulic actuator by the hydraulic system. The sprayer is actuated by the hydraulic actuator.

No. of Pages : 22 No. of Claims : 20

(12) PATENT APPLICATION PUBLICATION
(19) INDIA
(22) Date of filing of Application :12/11/2014
(21) Application No.9532/DELNP/2014 A
(43) Publication Date : 17/07/2015

(54) Title of the invention : METHOD AND SYSTEM FOR PRODUCING A TYRE TREAD WITH LUGS

| | |
|---|---|
| (51) International classification | :B29D30/52,B29D30/58,B29D30/66 |
| (31) Priority Document No | :TO2012A000353 |
| (32) Priority Date | :20/04/2012 |
| (33) Name of priority country | :Italy |
| (86) International Application No | :PCT/IB2013/053118 |
| Filing Date | :19/04/2013 |
| (87) International Publication No | :WO 2013/156982 |
| (61) Patent of Addition to Application Number | :NA |
| Filing Date | :NA |
| (62) Divisional to Application Number | :NA |
| Filing Date | :NA |

(71)**Name of Applicant :**
**1)BRIDGESTONE EUROPE NV**
Address of Applicant :Kleine Kloosterstraat 10, B-1932 Japan
(72)**Name of Inventor :**
**1)MATTOCCI, Roberto**

(57) Abstract :
A method of producing a tyre tread (4) with lugs ( 6 ); the tread having a tread base (5) and a number of lugs (6) projecting upwards from the tread base (5); and the method including the steps of: preparing a green rubber blank tread (13) thinner at the sides and thicker at the centre to define a raised centre portion (21); applying green rubber blocks (15) to the areas of the blank tread (13) where the lugs (6) are to be formed , which blocks rest centrally against the raised centre portion (21); and curing the blank tread (13) , together with the blocks (15) , in a curing mold (17) negatively reproducing the pattern of the tread (4).

No. of Pages : 38 No. of Claims : 21

(12) PATENT APPLICATION PUBLICATION
(21) Application No.1216/DEL/2012 A
(19) INDIA
(22) Date of filing of Application :19/04/2012
(43) Publication Date : 17/07/2015

(54) Title of the invention : SIMULATION BASED INTEGRATED TEST FACILITY

(51) International classification :G06N
(31) Priority Document No :NA
(32) Priority Date :NA
(33) Name of priority country :NA
(86) International Application No :NA
Filing Date :NA
(87) International Publication No :NA
(61) Patent of Addition to Application Number :NA
Filing Date :NA
(62) Divisional to Application Number :NA
Filing Date :NA

(71)**Name of Applicant :**
**1)DIRECTOR GENERAL, DEFENCE RESEARCH & DEVELOPMENT ORGANISATION**
Address of Applicant :MINISTRY OF DEFENCE, DEFENCE, DEFENCE R&D ORGANISATION, DTE OF ER & IPR, IPR GROUP, ROOM NO. 348, B-WING, DRDO BHAWAN, RAJAJI MARG, NEW DELHI 110105 INDIA
(72)**Name of Inventor :**
**1)SANTHANAM, RAMESH**
**2)BALASUBRAMANIAN, ROHINI**
**3)SUNDARAM, JOTHI**

(57) Abstract :
A simulation based integrated test facility (100, 200) for testing performance of a combat military vehicle (CMV) (102, 204) is disclosed. The simulation based test facility (100, 200) includes a test chamber (104) configured to provide a temperature controlled environment to evaluate performance of the CMV (102, 204). The CMV (102, 204) is mounted on a test bed (122, 216) within the test chamber (104). The simulation based test facility (100, 200) also includes an adjustment means (105) coupled to the test bed (122, 216). The adjustment means (105) is configured to position and hold the CMV (102, 204) on the test bed (122, 216). The simulation based test facility (100, 200) includes a plurality of hardware and software simulators associated with the test chamber (104). The plurality of hardware and software simulators are configured to simulate a realistic field environment for testing the CMV (102, 204).

No. of Pages : 26 No. of Claims : 12

(12) PATENT APPLICATION PUBLICATION
(19) INDIA
(22) Date of filing of Application :11/11/2014
(21) Application No.3254/DEL/2014 A
(43) Publication Date : 17/07/2015

(54) Title of the invention : ENCLOSURES AND METHODS FOR THE MASS DELIVERY OF LIVING BIOLOGICAL PEST CONTROL AGENTS AND METHOD OF MAKING THE SAME

(51) International classification :A01N25/22
(31) Priority Document No :14/077,431
(32) Priority Date :12/11/2013
(33) Name of priority country :U.S.A.
(86) International Application No :NA
Filing Date :NA
(87) International Publication No : NA
(61) Patent of Addition to Application Number :NA
Filing Date :NA
(62) Divisional to Application Number :NA
Filing Date :NA

(71)**Name of Applicant :**
**1)EMBRAER S.A.**
Address of Applicant :Av. Brigadeiro Faria Lima, 2.170, S£o Jos dos Campos, SP - 12227-901, Brazil
(72)**Name of Inventor :**
**1)MORETO Jos Roberto**
**2)DE ARAUJO Gabriel Barroso**
**3)ARIAS Caio Borges**

(57) Abstract :
Enclosures for mass delivery of a living biological pest control agent according to the embodiments disclosed herein include a body section having a generally cylindrical wall with opposed ends defining an interior surface, parasitized eggs of a living biological pest control agent (e.g., an endoparasitic insect) adhered to the interior surface of the wall, and at least one egress opening to allow the pest control agent to exit the body section to an exterior environment.

No. of Pages : 16 No. of Claims : 23

(12) PATENT APPLICATION PUBLICATION
(21) Application No.9538/DELNP/2014 A
(19) INDIA
(22) Date of filing of Application :13/11/2014
(43) Publication Date : 17/07/2015

(54) Title of the invention : IMPROVED DEVICE FOR ADJUSTING A DOSAGE WITH A LIMITING MECHANISM FOR A DEVICE FOR ADMINISTERING A PRODUCT

(51) International classification :A61M5/315
(31) Priority Document No :695/12
(32) Priority Date :16/05/2012
(33) Name of priority country :Switzerland
(86) International Application No :PCT/CH2013/000081
Filing Date :13/05/2013
(87) International Publication No :WO 2013/170392
(61) Patent of Addition to Application Number :NA
Filing Date :NA
(62) Divisional to Application Number :NA
Filing Date :NA

(71)**Name of Applicant :**
**1)TECPHARMA LICENSING AG**
Address of Applicant :Brunnmattstrasse 6, CH -3401 Burgdorf Switzerland
(72)**Name of Inventor :**
**1)HIRSCHEL J¼rg**
**2)MOSER ,Ulrich**

(57) Abstract :
Dosing device for an administration device with a limiting mechanism , comprising a first limiting means (50) with a first stop means (52), a second limiting means (30) with a second stop means (32,) wherein the second limiting means follows movements of the first limiting means during dosing movements with a defined transmission ratio, and wherein the first and the second stop, means each describe a path curve by their movements in such a manner that the two path curves intersect in at least one point or come so close together that the stop means, contact one another in a stop position whereby a blocking of the movement of the limiting means relative to each other during dosing movements can be effected in that the respective path curves described by the first and second stop means are closed and can be run through preferably multiple times by the first stop means by the second stop means or by both stop means until the stop means ,contact one another at the stop position.

No. of Pages : 43 No. of Claims : 17

(12) PATENT APPLICATION PUBLICATION
(19) INDIA
(22) Date of filing of Application :13/11/2014
(21) Application No.9539/DELNP/2014 A
(43) Publication Date : 17/07/2015

(54) Title of the invention : HEAT PUMP

(51) International classification :F25B13/00,F25B29/00,F25B49/02
(31) Priority Document No :2012901464
(32) Priority Date :13/04/2012
(33) Name of priority country :Australia
(86) International Application No :PCT/AU2013/000379
Filing Date :15/04/2013
(87) International Publication No :WO 2013/152400
(61) Patent of Addition to Application Number :NA
Filing Date :NA
(62) Divisional to Application Number :NA
Filing Date :NA

(71)**Name of Applicant :**
**1)BENSON GLOBAL PTY LTD**
Address of Applicant :Suite 1522 Railway Road, Subiaco, Western Australia 6008
(72)**Name of Inventor :**
**1)SMITH, Steven Michael**

(57) Abstract :
A heat pump (10) including a fluid circuit (10A) and a control arrangement (8). The fluid circuit includes a first heat exchanger (2) , a second heat exchanger (6), a third heat exchanger (4) and a driver (1) for driving fluid about the fluid circuit. The control arrangement has one or more modes of operation. The first heat exchanger is arranged to exchange heat between the fluid of the fluid circuit and further fluid. The control arrangement is configured to in at least one of the modes of operation control a flow control mechanism (2A) to control a flow rate of the further fluid of the first heat exchanger.

No. of Pages : 18 No. of Claims : 33

(12) PATENT APPLICATION PUBLICATION
(21) Application No.1018/DEL/2012 A
(19) INDIA
(22) Date of filing of Application :02/04/2012
(43) Publication Date : 17/07/2015

(54) Title of the invention : PROCESS FOR REFOLDING OF RECOMBINANT PROTEIN

(51) International classification :C12N
(31) Priority Document No :NA
(32) Priority Date :NA
(33) Name of priority country :NA
(86) International Application No :NA
Filing Date :NA
(87) International Publication No :NA
(61) Patent of Addition to Application Number :NA
Filing Date :NA
(62) Divisional to Application Number :NA
Filing Date :NA

(71)**Name of Applicant :**
**1)INDIAN INSTITUTE OF TECHNOLOGY DELHI**
Address of Applicant :KUSUMA SCHOOL OF BIOLOGICAL SCIENCES, INDIAN INSTITUTE OF TECHN0LOGY DELHI, HAUZ KHAS, NEW DELHI 110016, INDIA
(72)**Name of Inventor :**
**1)CHAUDHURI, TAPAN KUMAR**
**2)DAHIYA, VINAY**

(57) Abstract :
A process for protein refolding is provided herein. The process is particularly useful for recovering large and multi-domain recombinant proteins from their non native and denatured state to the functional form. The present invention further provides a modified refolding buffer for refolding of unfolded recombinant protein. The process for recovering refolded recombinant protein as disclosed in the present invention allows recovery of properly refolded recombinant protein with refolding yield greater than 80%.

No. of Pages : 35 No. of Claims : 10

(12) PATENT APPLICATION PUBLICATION
(21) Application No.3407/DEL/2013 A
(19) INDIA
(22) Date of filing of Application :21/11/2013
(43) Publication Date : 17/07/2015

(54) Title of the invention : A GADGET TO FIND THE DISTANCE OF OBJECTS USING VISION AND CERTAIN MOVEMENTS

(51) International classification :G08F
(31) Priority Document No :NA
(32) Priority Date :NA
(33) Name of priority country :NA
(86) International Application No :NA
Filing Date :NA
(87) International Publication No : NA
(61) Patent of Addition to Application Number :NA
Filing Date :NA
(62) Divisional to Application Number :NA
Filing Date :NA

(71)**Name of Applicant :**
**1)SUNEET KHOKHAR**
Address of Applicant :H.NO. 108, SECTOR-8, POCKET C-7, ROHINI, NEW DELHI-110085. India
(72)**Name of Inventor :**
**1)SUNEET KHOKHAR**

(57) Abstract :
This gadget and technique are meant to find the distance of objects using a camera, a circular rim, a robotic arm that are meant to cover the object completely every time when its distance is to be calculated. or This gadget can consist of a transparent spherical glass made of either some material that can reflect most of light falling on it or it is made of transparent leds really small in size that can glow to cover the object whose distance is to be calculated using a geometrical technique it finds out the distance to the object . The robotic arm is only meant to cover the object whose distance is to be calculated and it does so by adjusting the outer most portion of the arm because it can spread out and fold like a foldable and unfoldable gate with no gap in between them and whose spread is known as a mathematical value. In both the cases it uses two such arrangements of either the rim kind or the transparent spherical glass kind placed one inside the other. Finally it creates the situation where the number of divisions of corresponding circles, divisions of their diameter are same and match in numbers, thus telling us that how many of such objects can be placed between the gadget and the actual object. now a movement towards or away by the gadget from the object can be known and used to calculate the actual distance.

No. of Pages : 23 No. of Claims : 3

(12) PATENT APPLICATION PUBLICATION
(21) Application No.933/DEL/2012 A
(19) INDIA
(22) Date of filing of Application :28/03/2012
(43) Publication Date : 17/07/2015

(54) Title of the invention : SATELLITE BASED REPORTING TERMINAL FOR TORPEDO

(51) International classification :F04B
(31) Priority Document No :NA
(32) Priority Date :NA
(33) Name of priority country :NA
(86) International Application No :NA
Filing Date :NA
(87) International Publication No :NA
(61) Patent of Addition to Application Number :NA
Filing Date :NA
(62) Divisional to Application Number :NA
Filing Date :NA

(71)**Name of Applicant :**
**1)DIRECTOR GENERAL, DEFENCE RESEARCH & DEVELOPMENT ORGANISATION**
Address of Applicant :MINISTRY OF DEFENCE, GOVT OF INDIA, ROOM NO 348, B-WING, DRDO BHAWAN, RAJAJI MARG, NEW DELHI 110 105. India
(72)**Name of Inventor :**
**1)SRINIVASA VENKATA RANGARAJAN**
**2)DEBASISH CHAKRABORTI**
**3)ABRAHAM VARUGHESE**
**4)KONDETHIMMANAHALLI SATYANARAYANA PADMAJA**
**5)ABBURI VIDYASAGAR**

(57) Abstract :
The invention relates to a remote GPS based locator system for reporting an at-ocean torpedo for recovery. The system comprising of a remote tracking base station and on¬board dynamic positioning reporting terminal means which is coupled to two external sources such as Global Positioning System satellite and communication satellite. The system is capable of receiving a positioning signal transmitted from the Global Positioning System satellite and transmit the same to the remote tracking station. The on-board dynamic Positioning Reporting Terminal means further coupled to an transponder-antenna means to communicate with GPS satellite and Communication satellite systems. The system further includes an on-board water-pressure identification means for indicative of the approximate position of the torpedo below the water surface and on-board ejection means for eject and extend an antenna towards the ocean surface, when the pressure identification means identifies a water pressure level falling within a preselected range, thereby activating the antenna to communicate with GPS satellite and Communication satellite systems.

No. of Pages : 26 No. of Claims : 12

(12) PATENT APPLICATION PUBLICATION
(19) INDIA
(22) Date of filing of Application :13/11/2014
(21) Application No.9544/DELNP/2014 A
(43) Publication Date : 17/07/2015

(54) Title of the invention : SPRAY DEVICE FOR ROLLING EQUIPMENT AND METHOD FOR REMOVING/INSERTING SAID SYSTEM FROM/INTO SAID ROLL STAND

(51) International classification :B21B27/10,B21B45/02
(31) Priority Document No :12290204.2
(32) Priority Date :22/06/2012
(33) Name of priority country :EPO
(86) International Application No :PCT/EP2013/059229
Filing Date :03/05/2013
(87) International Publication No :WO 2013/189657
(61) Patent of Addition to Application Number :NA
Filing Date :NA
(62) Divisional to Application Number :NA
Filing Date :NA

(71)**Name of Applicant :**
**1)SIEMENS, VAI METALS TECHNOLOGIES GMBH**
Address of Applicant :Turmstrae 44, A -4031 Linz Austria
(72)**Name of Inventor :**
**1)CHARRE, Francis**
**2)CLAVELLOUX, Patrick**

(57) Abstract :
The present invention relates to a spray device (11 , 11 , 12 , 12 ) for lubricating and cooling the strip (2) and/or the air gap of a roll stand having multiple rolls, as well as to a method for removing/inserting said device from/into the roll stand wherein the spray device (11, 11, 12, 12 ) is characterized in that it includes a fixed spray table (11A, 11 A, 12A, 12 A) having an elongate shape and configured to be rigidly connected to a plurality of mounting plates (7) in a row of bearing rolls (6 , 6 ) of said roll stand said fixed table (11A, 11 A, 12A , 12 A) including a network (112) for dispensing a fluid for lubrication and cooling via a plurality of nozzles (113), a connector for connecting said fluid- dispensing network (112) to a network for supplying said fluid , and an attachment means for rigidly connecting the table to said mounting plates (7).

No. of Pages : 25 No. of Claims : 15

(12) PATENT APPLICATION PUBLICATION
(21) Application No.793/DEL/2012 A
(19) INDIA
(22) Date of filing of Application :19/03/2012
(43) Publication Date : 17/07/2015

(54) Title of the invention : FOOD CONTAINER FOR EXTREMELY LOW TEMPERATURE CONDITIONS

| | | |
|---|---|---|
| (51) International classification | :B23B | |
| (31) Priority Document No | :NA | |
| (32) Priority Date | :NA | |
| (33) Name of priority country | :NA | |
| (86) International Application No | :NA | |
| Filing Date | :NA | |
| (87) International Publication No | :NA | |
| (61) Patent of Addition to Application Number | :NA | |
| Filing Date | :NA | |
| (62) Divisional to Application Number | :NA | |
| Filing Date | :NA | |

(71)**Name of Applicant :**
**1)DIRECTOR GENERAL, DEFENCE RESEARCH & DEVELOPMENT ORGANISATION**
Address of Applicant :MINISTRY OF DEFENCE, ROOM NO. 348, B-WING, DRDO BHAWAN, RAJAJI MARG, NEW DELHI-110011 (INDIA)
(72)**Name of Inventor :**
**1)YADAW, SAMAR BAHADUR**
**2)MISHRA, ARUN KUMAR**
**3)CHAUDHARY, KRISHNA MURARI**
**4)VESH, ADITYA**

(57) Abstract :
Disclosed is a food container. The food container comprises an outer container made of high density polyethylene (HDPE) and an inner container configured within the outer container. The outer container has a first base and a first peripheral wall and the inner container has a second base and a second peripheral wall bounding a chamber. The inner container is made of polypropylene and has a similar configuration and smaller size as compared to the outer container such that the inner container is disposed within the outer container in a spaced apart manner so as to configure a space between the first peripheral wall and the second peripheral wall. The food container also comprises a casing, having a cavity adapted to receive food, disposed within the chamber. An inner lid is provided to to be secured to the casing for covering the cavity and an outer lid is provided to be configured over the outer container for covering the inner lid.

No. of Pages : 23 No. of Claims : 15

(12) PATENT APPLICATION PUBLICATION
(21) Application No.87/DEL/2014 A
(19) INDIA
(22) Date of filing of Application :13/01/2014
(43) Publication Date : 17/07/2015

(54) Title of the invention : NANO PT-CE OXIDE CATALYST FOR ACTIVATION OF METHANE AND A PROCESS FOR THE THE PREPARATION THEREOF.

(51) International classification :A61B
(31) Priority Document No :NA
(32) Priority Date :NA
(33) Name of priority country :NA
(86) International Application No :NA
Filing Date :NA
(87) International Publication No : NA
(61) Patent of Addition to Application Number :NA
Filing Date :NA
(62) Divisional to Application Number :NA
Filing Date :NA

(71)**Name of Applicant :**
**1)COUNCIL OF SCIENTIFIC & INDUSTRIAL RESEARCH**
Address of Applicant :ANUSANDHAN BHAWAN, RAFI MARG, NEW DELHI - 110001, INDIA.
(72)**Name of Inventor :**
**1)BAL RAJARAM**
**2)SINGHA RAJIB KUMAR**
**3)SARKAR BIPUL**
**4)PENDEM CHANDRASHEKAR**
**5)SHANKHA SHUBHRA ACHARYYA**
**6)GHOSH SHILPI**
**7)BORDOLOI ANKUR**
**8)KONATHALA LAXMI NARAYAN SIVAKUMAR**

(57) Abstract :
The present invention provides a process and catalyst for the production of synthesis gas (a mixture of CO and H2) by partial oxidation of methane. The process provides a direct single step selective vapor phase partial oxidation of methane to synthesis gas over Pt-Ce02catalyst between temperature range of 350 C to 800 C at atmospheric pressure. The process provides a methane conversion of 28-95% with H2 to CO mole ratio of 1.6 to 2.

No. of Pages : 30 No. of Claims : 9

(12) PATENT APPLICATION PUBLICATION
(19) INDIA
(22) Date of filing of Application :12/11/2014
(21) Application No.9511/DELNP/2014 A
(43) Publication Date : 17/07/2015

(54) Title of the invention : OPHTHALMIC LENS

(51) International classification :G02C7/10,G02B5/28,G02B1/11
(31) Priority Document No :1254529
(32) Priority Date :16/05/2012
(33) Name of priority country :France
(86) International Application No:PCT/FR2013/051075
Filing Date :16/05/2013
(87) International Publication No :WO 2013/171435
(61) Patent of Addition to Application Number :NA
Filing Date :NA
(62) Divisional to Application Number :NA
Filing Date :NA

(71)**Name of Applicant :**
**1)ESSILOR INTERNATIONAL (COMPAGNIE GENERALE DOPTIQUE)**
Address of Applicant :147 rue de Paris, F- 94220 Charenton le Pont France
(72)**Name of Inventor :**
**1)DE AYGUAVIVES, Francisco**
**2)MAURY ,Hl¨ne**

(57) Abstract :
The invention relates to an ophthalmic lens having a main front face and a main rear face comprising: a means for cutting off ultraviolet (UV) light incident on the main front face of the ophthalmic lens; an anti- reflection coating on the main rear face of the ophthalmic lens, having a weighted average reflection factor in the UV region of less than or equal to 7%; and at least one means for at least partially blocking the blue light in the wavelength region from 400 to 460 nanometres preferably from 420 to 450 nanometres.

No. of Pages : 36 No. of Claims : 13

(12) PATENT APPLICATION PUBLICATION
(19) INDIA
(22) Date of filing of Application :12/11/2014
(21) Application No.9512/DELNP/2014 A
(43) Publication Date : 17/07/2015

(54) Title of the invention : METHOD FOR GENERATING A GEAR TOOTH SYSTEM , AND A GEAR CUTTING MACHINE THAT CAN BE OPERATED USING SAID METHOD

(51) International classification :B23F5/12,B23F5/16
(31) Priority Document No :10 2012 012 617.4
(32) Priority Date :19/06/2012
(33) Name of priority country :Germany
(86) International Application No :PCT/EP2013/001695
Filing Date :10/06/2013
(87) International Publication No :WO 2013/189574
(61) Patent of Addition to Application Number :NA
Filing Date :NA
(62) Divisional to Application Number :NA
Filing Date :NA

(71)**Name of Applicant :**
**1)GLEASON- PFAUTER MASCHINENFABRIK GMBH**
Address of Applicant :Daimlerstrasse 14, 71636 Ludwigsburg Germany
(72)**Name of Inventor :**
**1)KRESCHEL, J¼rgen**
**2)KOBIALKA ,Claus**

(57) Abstract :
The invention relates to a method for generating a gear tooth system wherein a workpiece to be toothed and a chip removing tool are brought together by rolling motion until after several passes of the tool every flank of the gear tooth system has been generated. During each pass a cut surface having at least one flank section is generated on the workpiece wherein an additional motion is superimposed onto the rolling motion by way of which the flank sections generated during at least two directly consecutive passes are connected. The invention further relates to a controlled gear cutting machine for carrying out said method.

No. of Pages : 24 No. of Claims : 14

(12) PATENT APPLICATION PUBLICATION
(21) Application No.9513/DELNP/2014 A
(19) INDIA
(22) Date of filing of Application :12/11/2014
(43) Publication Date : 17/07/2015

(54) Title of the invention : COMPOSITION COMPRISING A BIOLOGICAL CONTROL AGENT AND A FUNGICIDE SELECTED FROM INHIBITORS OF THE ERGOSTEROL BIOSYNTHESIS

(51) International classification :A01N63/00,A01N43/653,A01N37/24
(31) Priority Document No :12004160.3
(32) Priority Date :30/05/2012
(33) Name of priority country :EPO
(86) International Application No :PCT/EP2013/061008
Filing Date :29/05/2013
(87) International Publication No :WO 2013/178648
(61) Patent of Addition to Application Number :NA
Filing Date :NA
(62) Divisional to Application Number :NA
Filing Date :NA

(71)**Name of Applicant :**
**1)BAYER, CROPSCIENCE AG**
Address of Applicant :Alfred Nobel Strasse 50, 40789 Monheim Germany
(72)**Name of Inventor :**
**1)WACHENDORF-, NEUMANN, Ulrike**
**2)ANDERSCH, Wolfram**
**3)STENZEL, Klaus**
**4)SPRINGER ,Bernd**

(57) Abstract :
The present Invention relates to a composition comprising at least one biological control agent selected from the group consisting of Bacillus chitinosporus AQ746 (NRRL Accession No. B 21618) Bacillus mycoides AQ726 (NRRL Accession No. B 21664) Bacillus pumilus (NRRL Accession No. B 30087) Bacillus pumilus AQ717 (NRRL Accession No. B 21662). Bacillus sp. AQ175 (ATCC Accession No. 55608) Bacillus sp. AQ177 (ATCC Accession No. 55609) Bacillus sp. AQ178 (ATCC Accession No. 53522) Bacillus subtllis AQ743 (NRRL Accession No. B 21665) Bacillus subtllis AQ713 (NRRL Accession No. B 21661) Bacillus subtillis AQ153 (ATCC Accession No. 55614) Bacillus thuringiensis BD 32 (NRRL Accession No. B 21530) Bacillus thuringiensis AQ52 (NRRL Accession No. B 21619) Muscodor albus 620 (NRRL Accession No. 30547) Muscodor roseus A3 5 (NRRL Accession No. 30548) Rhodococcus globerulus AQ719 (NRRL Accession No. B 21663) Streptomyces galbus (NRRL Accession No. 30232) Streptomyces sp. (NRRL Accession No. B 30145) Bacillus thuringiensis subspec. kurstaki BMP 123 Bacillus subtilis AQ30002 (NRRL Accession No. B 50421) and Bacillus subtilis AQ 30004 (NRRL Accession No. B 50455) and/or a mutant of these strains having all the identifying characteristics of the respective strain and/or a metabolite produced by the respective strain that exhibits activity against insects mites nematodes and/or phytopathogens and at least one fungicide (I) selected from the group consisting of inhibitors of the ergosterol biosynthesis in a synergisticaily effective amount. Furthermore the present invention relates to the use of this composition as well as a method for reducing overall damage of plants and plant parts.

No. of Pages : 86 No. of Claims : 15

(12) PATENT APPLICATION PUBLICATION
(21) Application No.2358/DEL/2010 A
(19) INDIA
(22) Date of filing of Application :30/09/2010
(43) Publication Date : 17/07/2015

(54) Title of the invention : A CHEMICAL ROUTE FOR THE PRODUCTION OF TUNGSTEN NANOPARTICLES

(51) International classification :B82B1/00
(31) Priority Document No :NA
(32) Priority Date :NA
(33) Name of priority country :NA
(86) International Application No :NA
Filing Date :NA
(87) International Publication No : NA
(61) Patent of Addition to Application Number :NA
Filing Date :NA
(62) Divisional to Application Number :NA
Filing Date :NA

(71)**Name of Applicant :**
**1)Director General Defence Research & Development Organization**
Address of Applicant :Ministry of Defence Government of India Room No. 348 B-Wing DRDO Bhavan Rajaji Marg New Delhi:- 110 011 India
(72)**Name of Inventor :**
**1)Prasanta Kumar Sahoo**
**2)Sarika Srinivas Kalyan Kamal**
**3)Thammana Jagadeesh Kumar**
**4)Loganathan Durai**

(57) Abstract :
The present invention discloses a method for the production of a tungsten nanoparticles with an average particle size of 5-100nm. The method includes providing a tungsten containing component, a carbon containing component, and a stabilizer. Concentration of the tungsten containing solution and the solution containing carbon source and stabilizer are varied to obtained the tungsten nanoparticle of vary size of 5-100nm. Further, the method includes the production of carbon nanoparticle in-situ which in turn reduces the tungsten containing component to form the tungsten nanoparticle.

No. of Pages : 21 No. of Claims : 8

(12) PATENT APPLICATION PUBLICATION
(21) Application No.3260/DEL/2014 A
(19) INDIA
(22) Date of filing of Application :11/11/2014
(43) Publication Date : 17/07/2015

(54) Title of the invention : COVERING MATERIAL FOR PRESS-THROUGH PACK PACKAGE AND METHOD FOR PRODUCING THE SAME, AND PRESS-THROUGH PACK PACKAGE AND METHOD FOR PRODUCING THE SAME

(51) International classification :b65d
(31) Priority Document No :P2013-235822
(32) Priority Date :14/11/2013
(33) Name of priority country :Japan
(86) International Application No :NA
Filing Date :NA
(87) International Publication No : NA
(61) Patent of Addition to Application Number :NA
Filing Date :NA
(62) Divisional to Application Number :NA
Filing Date :NA

(71)**Name of Applicant :**
**1)Asahi Kasei Chemicals Corporation**
Address of Applicant :1-105, Kanda Jinbocho, Chiyoda-ku, Tokyo 101-8101 Japan
(72)**Name of Inventor :**
**1)Tohru OKUDA**
**2)Hideki HAYASHI**

(57) Abstract :
A covering material for a press-through pack package 8 has a covering material film 4A1 and a heat seal layer 3 comprising a heat sealing agent. The heat sealing agent includes a first thermoplastic resin having a glass transition temperature of-70°C or higher and below 20°C, and a second thermoplastic resin having a glass transition temperature that is at least 10°C higher than the glass transition temperature of the first thermoplastic resin.

No. of Pages : 54 No. of Claims : 8

(12) PATENT APPLICATION PUBLICATION
(21) Application No.934/DEL/2012 A
(19) INDIA
(22) Date of filing of Application :28/03/2012
(43) Publication Date : 17/07/2015

(54) Title of the invention : A DC-DC POWER CONVERTER WITH A MULTI-PHASE PULSE WIDTH MODULATION SIGNAL GENERATOR ELECTRONIC CIRCUIT FOR REGULATED OUTPUT VOLTAGE

(51) International classification :G11B
(31) Priority Document No :NA
(32) Priority Date :NA
(33) Name of priority country :NA
(86) International Application No :NA
Filing Date :NA
(87) International Publication No :NA
(61) Patent of Addition to Application Number :NA
Filing Date :NA
(62) Divisional to Application Number :NA
Filing Date :NA

(71)**Name of Applicant :**
**1)DIRECTOR GENERAL, DEFENCE RESEARCH & DEVELOPMENT ORGANISATION**
Address of Applicant :MINISTRY OF DEFENCE, GOVERNMENT OF INDIA, ROOM NO 348, B-WING, DRDO BHAWAN, RAJAJI MARG, NEW DELHI 110 011, INDIA.
(72)**Name of Inventor :**
**1)BASAM VENKATA RAO**
**2)ASWANI UPPADA**
**3)PERAVALI TRIMURTHULU**
**4)AMITAVA DAS**
**5)SRINIVASA VENKATA RANGARAJAN**

(57) Abstract :
The invention relates to a DC-DC power converter with a multi-phase PWM signal generator electronic circuit for regulated output voltage from an input source. The converter comprises of a plurality (n) of parallel semi-conductor devices, a multi-phase PWM signal generator electronic circuit, a control logic module and a plurality (n) of free-wheeling diodes for the generation of variable duty cycle and adjustable frequency multi-phase PWM pulses along with an option to selectively choose the number of phases of operation. The present invention also provides the multi-phase PWM signal generator electronic circuit with 'phase error correction' logic to avoid the problem of possible jitter in the output PWM signals.

No. of Pages : 27 No. of Claims : 11

(12) PATENT APPLICATION PUBLICATION
(19) INDIA
(22) Date of filing of Application :13/11/2014
(21) Application No.9551/DELNP/2014 A
(43) Publication Date : 17/07/2015

(54) Title of the invention : PROCESS FOR PRODUCING VOLATILE ORGANIC COMPOUNDS FROM BIOMASS MATERIAL

(51) International classification :C12P7/06,C12P7/10,B01D1/14
(31) Priority Document No :61/648109
(32) Priority Date :17/05/2012
(33) Name of priority country :U.S.A.
(86) International Application No :PCT/US2013/041309
Filing Date :16/05/2013
(87) International Publication No :WO 2013/173562
(61) Patent of Addition to Application Number :NA
Filing Date :NA
(62) Divisional to Application Number :NA
Filing Date :NA

(71)**Name of Applicant :**
**1)SHELL INTERNATIONALE RESEARCH MAATSCHAPPIJ B.V.**
Address of Applicant :Carel van Bylandtlaan 30, NL- 2596 The Hague Netherlands
(72)**Name of Inventor :**
**1)RADTKE, Corey William**
**2)HAMILTON, Phillip Guy**
**3)KREITMAN, Keith Michael**

(57) Abstract :
Embodiments of the present invention provide for production and recovery of ethanol or other volatile organic compounds, such as acetic, acid from solid biomass material. One embodiment comprises introducing a biomass material to a compartment of a solventless recovery system wherein the biomass material contains one or more volatile organic compounds; contacting the biomass material with a superheated vapor stream in the compartment to vaporize at least a portion of an initial liquid content in the biomass material, said superheated vapor stream comprising at least one volatile organic compound; separating a vapor component and a solid component from the heated biomass material, said vapor component comprising at least one volatile organic compound; and retaining at least a portion of the gas component for use as part of the superheated vapor stream.

No. of Pages : 47 No. of Claims : 16

(12) PATENT APPLICATION PUBLICATION
(19) INDIA
(22) Date of filing of Application :13/11/2014
(21) Application No.9552/DELNP/2014 A
(43) Publication Date : 17/07/2015

(54) Title of the invention : METHODS AND SYSTEMS FOR PROCESSING BIOMASS MATERIAL

(51) International classification :C12F3/10,A23K1/00,C12P7/06
(31) Priority Document No :61/648109
(32) Priority Date :17/05/2012
(33) Name of priority country :U.S.A.
(86) International Application No :PCT/US2013/041327
Filing Date :16/05/2013
(87) International Publication No :WO 2013/173569
(61) Patent of Addition to Application Number :NA
Filing Date :NA
(62) Divisional to Application Number :NA
Filing Date :NA

(71)**Name of Applicant :**
**1)SHELL INTERNATIONALE RESEARCH MAATSCHAPPIJ B.V.**
Address of Applicant :Carel van Bylandtlaan 30, NL -2596 The Hague Netherlands
(72)**Name of Inventor :**
**1)HAMILTON, Phillip Guy**
**2)RADTKE, Corey William**
**3)KREITMAN ,Keith Michael**
**4)WEIDER ,Paul Richard**
**5)BLACKBOURN, Robert Lawrence**

(57) Abstract :
Embodiments of the present invention provide for efficient and economical production and recovery of ethanol or other volatile organic compounds. One embodiment comprises contacting a solid component of a biomass material with a solution adapted to facilitate saccharification. The solid component is generated by a method comprising: introducing a biomass material to a compartment of a solventless recovery system, wherein the biomass material contains one or more volatile organic compounds; contacting the biomass material with a superheated vapor stream in the compartment to vaporize at least a portion of an initial liquid content in the biomass material; separating a vapor component and a solid component from the heated biomass material; and retaining at least a portion of the gas component for use as part of the superheated vapor stream. In one embodiment , the solid component contacted with the solution is further subjected to enzymatic hydrolysis and/or fermentation.

No. of Pages : 79 No. of Claims : 18

(12) PATENT APPLICATION PUBLICATION
(19) INDIA
(22) Date of filing of Application :12/11/2014
(21) Application No.9533/DELNP/2014 A
(43) Publication Date : 17/07/2015

(54) Title of the invention : METHOD AND SYSTEM FOR MANUFACTURING A TYRE TREAD WITH LUGS

(51) International classification :B29D30/52,B29D30/58,B29D30/66
(31) Priority Document No :TO2012A000354
(32) Priority Date :20/04/2012
(33) Name of priority country :Italy
(86) International Application No :PCT/IB2013/053119
Filing Date :19/04/2013
(87) International Publication No :WO 2013/156983
(61) Patent of Addition to Application Number :NA
Filing Date :NA
(62) Divisional to Application Number :NA
Filing Date :NA

(71)**Name of Applicant :**
**1)BRIDGESTONE EURPOE NV**
Address of Applicant :Kleine Lkoosterstraat 10, B-1932 Japan
(72)**Name of Inventor :**
**1)MATTOCCI, Roberto**

(57) Abstract :
A method and system (10) for manufacturing a tyre tread (4) with lugs (6), the tread having a tread base (5), and a number of lugs (6) projecting upwards from the tread base (5); the method having the steps of: preparing a green rubber blank tread (13) of constant thickness; applying rubber blocks (15) to the areas of the blank tread (13) where the lugs (6) are to be formed each block varying lengthwise in cross section , so it is thinner at the centre and thicker at the side; and curing the blank tread (13), together with the blocks (15), in a curing mold (17) negatively reproducing the pattern of the tread (4).

No. of Pages : 34 No. of Claims : 14

(12) PATENT APPLICATION PUBLICATION
(19) INDIA
(22) Date of filing of Application :12/11/2014
(21) Application No.9534/DELNP/2014 A
(43) Publication Date : 17/07/2015

(54) Title of the invention : WAVEGUIDE ASSEMBLY

(51) International classification :H01P1/04
(31) Priority Document No :NA
(32) Priority Date :NA
(33) Name of priority country :NA
(86) International Application No :PCT/GB2012/000437
Filing Date :16/05/2012
(87) International Publication No :WO 2013/171438
(61) Patent of Addition to Application Number :NA
Filing Date :NA
(62) Divisional to Application Number :NA
Filing Date :NA

(71)**Name of Applicant :**
**1)FLEXIGUIDE LTD**
Address of Applicant :Unit 9, Rodgers Industrial Estate, Yalberton Road, Paignton, Devon TQ4 7QG U.K.
(72)**Name of Inventor :**
**1)PRIVETT ,Jason, B.**

(57) Abstract :
A waveguide adapter assembly for coupling a waveguide to an apparatus is provided, the assembly comprising a waveguide adapter having an adapter body , the adapter body having a first end and a second end , the adapter body further having a cavity therein , the cavity having a first opening in the first end for receiving an end portion of a waveguide and a second opening in the second end for communicating with a corresponding opening in the apparatus the second end having a mating face around the second opening for mating with a corresponding surface of the apparatus; and a flange assembly having a first end and a second end for connecting to the apparatus, the flange assembly having a bore therethrough for receiving the waveguide adaptor. In a further arrangement the adapter assembly comprises an adapter body for receiving an end portion of a waveguide and for connecting to the apparatus; and means for biasing the adapter body into contact with a mating surface of the apparatus.

No. of Pages : 32 No. of Claims : 35

(12) PATENT APPLICATION PUBLICATION
(21) Application No.9535/DELNP/2014 A
(19) INDIA
(22) Date of filing of Application :12/11/2014
(43) Publication Date : 17/07/2015

(54) Title of the invention : METHOD AND DEVICE FOR SAMPLING RECYCLED RAW MATERIAL ANALYSIS SAMPLE OF RECYCLED RAW MATERIAL AND METHOD FOR EVALUATING RECYCLED RAW MATERIAL

(51) International classification :G01N1/04,B09B3/00,B09B5/00
(31) Priority Document No :2013094734
(32) Priority Date :26/04/2013
(33) Name of priority country :Japan
(86) International Application No :PCT/JP2013/074845
Filing Date :13/09/2013
(87) International Publication No :WO 2014/174699
(61) Patent of Addition to Application Number :NA
Filing Date :NA
(62) Divisional to Application Number :NA
Filing Date :NA

(71)**Name of Applicant :**
**1)MITSUBISHI MATERIALS CORPORATION**
Address of Applicant :3 -2 Otemachi 1- chome, Chiyoda -ku, Tokyo 1008117 Japan
(72)**Name of Inventor :**
**1)OGUMA, Nobuhiro**
**2)TAKAGI, Makoto**
**3)WAJIMA Eiji**

(57) Abstract :
A method including: a step (S3) in which recycled raw materials are primarily crushed; steps (S4 to S7) in which the primarily crushed raw materials are separated into three kinds, i.e., Fe scraps Al scraps, and recycled raw materials other than Fe and Al scraps and primary reduction is conducted; steps (S8 to S10) in which the recycled raw materials other than Fe and Al scraps after the primary reduction are secondarily crushed to conduct secondary reduction; and a mixing step (S12) in which the Fe scraps, and Al scraps, are mixed with the recycled raw materials other than Fe and Al scraps which have undergone the secondary reduction, in a mixing ratio that corresponds to the weight ratio of the three kinds i.e., Fe scraps Al scraps, and recycled raw materials other than Fe and Al scraps. The mixture obtained in the mixing step is used as a sample to be analyzed.

No. of Pages : 43 No. of Claims : 13

(12) PATENT APPLICATION PUBLICATION
(21) Application No.9536/DELNP/2014 A
(19) INDIA
(22) Date of filing of Application :12/11/2014
(43) Publication Date : 17/07/2015

(54) Title of the invention : METHOD FOR PRODUCING CATALYST FOR FUEL CELLS AND FUEL CELL WHICH COMPRISES CATALYST FOR FUEL CELLS PRODUCED BY SAID PRODUCTION METHOD

(51) International classification :H01M4/88,H01M4/86,H01M4/92
(31) Priority Document No :2012111402
(32) Priority Date :15/05/2012
(33) Name of priority country :Japan
(86) International Application No :PCT/JP2013/051083
Filing Date :21/01/2013
(87) International Publication No :WO 2013/172050
(61) Patent of Addition to Application Number :NA
Filing Date :NA
(62) Divisional to Application Number :NA
Filing Date :NA

(71)**Name of Applicant :**
**1)TOYOTA JIDOSHA KABUSHIKI KAISHA**
Address of Applicant :1, Toyota- cho, Toyota- shi, Aichi 4718571 Japan
**2)BALLARD POWER SYSTEMS INC.**
(72)**Name of Inventor :**
**1)KIMURA, Hiroko**
**2)TAKEHIRO, Naoki**

(57) Abstract :
Provided are: a method for producing a catalyst for fuel cells , said catalyst having excellent durability; and a fuel cell, which comprises a catalyst for fuel cells , said catalyst being produced by the production method. A method for producing a catalyst for fuel cells said catalyst being provided with: fine catalyst particles, each comprising a center particle ,containing palladium and an outermost layer containing platinum and covering the center particle; and a carbon carrier by which the fine catalyst particles are supported. This method for producing a catalyst for fuel cells is characterized by comprising: a step for preparing a carbon carrier on which palladium- containing particles are supported; a step for making the carbon carrier, on which palladium containing particles are supported into fine pieces; and a step for coating the palladium ,containing particles with outermost layers that contain platinum after the step for making the carbon carrier into fine pieces.

No. of Pages : 76 No. of Claims : 12

(12) PATENT APPLICATION PUBLICATION
(21) Application No.2407/DEL/2011 A
(19) INDIA
(22) Date of filing of Application :24/08/2011
(43) Publication Date : 17/07/2015

(54) Title of the invention : A MICE SWIM ENDURANCE TEST APPARATUS AND METHOD THEREOF

(51) International classification :B61H
(31) Priority Document No :NA
(32) Priority Date :NA
(33) Name of priority country :NA
(86) International Application No :NA
Filing Date :NA
(87) International Publication No : NA
(61) Patent of Addition to Application Number :NA
Filing Date :NA
(62) Divisional to Application Number :NA
Filing Date :NA

(71)**Name of Applicant :**
**1)Director General Defence Research and Development Organization**
Address of Applicant :Ministry of Defence Govt. of India Room No 348 B-Wing DRDO Bhawan Rajaji Marg New Delhi 110011 India
(72)**Name of Inventor :**
**1)ALAPPA RAMAKRISHNA**
**2)SRINIVAS RAO NAVEEN**
**3)AMARINDER SINGH BAWA**

(57) Abstract :
The present invention provides a mice swim endurance test apparatus for testing the effect of antidepressant drugs comprising a water tank as the test area along with provisions for: conditioning of the water controlling and monitoring the flow and temperature of water in the tank adjusting the test media back pressure and adjusting the testing area based on the experiment. Additionally the clear viewing area on the front side of the tank and the video camera allow for effective monitoring and tracking of the test animals.

No. of Pages : 13 No. of Claims : 11

(12) PATENT APPLICATION PUBLICATION
(19) INDIA
(22) Date of filing of Application :02/03/2012
(21) Application No.615/DEL/2012 A
(43) Publication Date : 17/07/2015

(54) Title of the invention : INTRAVENOUS FILTER

(51) International classification :B23B
(31) Priority Document No :13/047,124
(32) Priority Date :14/03/2011
(33) Name of priority country :U.S.A.
(86) International Application No :NA
Filing Date :NA
(87) International Publication No :NA
(61) Patent of Addition to Application Number :NA
Filing Date :NA
(62) Divisional to Application Number :NA
Filing Date :NA

(71)**Name of Applicant :**
**1)PALL CORPORATION**
Address of Applicant :25 HARBOR PARK DRIVE, PORT WASHINGTON, NEW YORK 11050, UNITED STATES OF AMERICA
(72)**Name of Inventor :**
**1)MARTIN, CHARLES J.**
**2)TOMA, JEFFREY J.**

(57) Abstract :
Intravenous fluid filter devices including a filter comprising spaced apart first and second filter elements comprising hydrophilic membranes and providing inside-out flow, and methods of using the devices, are disclosed.

No. of Pages : 46 No. of Claims : 10

(12) PATENT APPLICATION PUBLICATION
(19) INDIA
(22) Date of filing of Application :07/11/2014
(21) Application No.9346/DELNP/2014 A
(43) Publication Date : 17/07/2015

(54) Title of the invention : NEW DIAZASPIROCYCLOALKANE AND AZASPIROCYCLOALKANE

(51) International classification :C07D249/18,C07D471/10,C07D487/10
(31) Priority Document No :12171839.9
(32) Priority Date :13/06/2012
(33) Name of priority country :EPO
(86) International Application No :PCT/EP2013/061890
Filing Date :10/06/2013
(87) International Publication No :WO 2013/186159
(61) Patent of Addition to Application Number :NA
Filing Date :NA
(62) Divisional to Application Number :NA
Filing Date :NA

(71)**Name of Applicant :**
**1)F. HOFFMANN- LA ROCHE AG**
Address of Applicant :Grenzacherstrasse 124, CH-4070 Basel Switzerland
(72)**Name of Inventor :**
**1)HUNZIKER, Daniel**
**2)MATTEI, Patrizio**
**3)MAUSER, Harald**
**4)PRUNOTTO, Marco**
**5)ULLMER, Christoph**

(57) Abstract :
The invention provides novel compounds having the general formula (I) wherein R1, R2, Y and W are as described herein compositions including the compounds and methods of using the compounds.

No. of Pages : 114 No. of Claims : 28

(12) PATENT APPLICATION PUBLICATION
(19) INDIA
(22) Date of filing of Application :07/11/2014
(21) Application No.9347/DELNP/2014 A
(43) Publication Date : 17/07/2015

(54) Title of the invention : SUBSTITUTED PYRAZOLE COMPOUNDS AS LPAR ANTAGONISTS

(51) International classification :C07D231/40,A61K31/192,A61P19/04
(31) Priority Document No :61/661958
(32) Priority Date :20/06/2012
(33) Name of priority country :U.S.A.
(86) International Application No :PCT/EP2013/062458
Filing Date :17/06/2013
(87) International Publication No :WO 2013/189862
(61) Patent of Addition to Application Number :NA
Filing Date :NA
(62) Divisional to Application Number :NA
Filing Date :NA

(71)**Name of Applicant :**
**1)F. HOFFMANN LA ROCHE AG**
Address of Applicant :Grenzacherstrasse 124, CH-4070 Basel Switzerland
(72)**Name of Inventor :**
**1)GABRIEL, Stephen Deems**
**2)HAMILTON, Matthew Michael**
**3)QIAN, Yimin**
**4)SIDDURI, Achyutharao**

(57) Abstract :
Provided herein are compounds of the formula (I): as well as pharmaceutically acceptable salts thereof wherein the substituents are as those disclosed in the specification. These compounds, and the pharmaceutical compositions containing them are useful for the treatment of inflammatory diseases and disorders such as, for example, pulmonary fibrosis

No. of Pages : 45 No. of Claims : 15

(12) PATENT APPLICATION PUBLICATION
(19) INDIA
(22) Date of filing of Application :07/11/2014
(21) Application No.9348/DELNP/2014 A
(43) Publication Date : 17/07/2015

(54) Title of the invention : N-ALKYLTRIAZOLE COMPOUNDS AS LPAR ANTAGONISTS

| | |
|---|---|
| (51) International classification | :C07D249/06,A61K31/4192,A61P29/00 |
| (31) Priority Document No | :61/661961 |
| (32) Priority Date | :20/06/2012 |
| (33) Name of priority country | :U.S.A. |
| (86) International Application No | :PCT/EP2013/062461 |
| Filing Date | :17/06/2013 |
| (87) International Publication No | :WO 2013/189864 |
| (61) Patent of Addition to Application Number | :NA |
| Filing Date | :NA |
| (62) Divisional to Application Number | :NA |
| Filing Date | :NA |

(71)**Name of Applicant :**
**1)F. HOFFMANN LA ROCHE AG**
Address of Applicant :Grenzacherstrasse 124, CH-4070 Basel Switzerland
(72)**Name of Inventor :**
**1)GABRIEL, Stephen Deems**
**2)HAMILTON, Matthew Michael**
**3)LUCAS, Matthew C.**
**4)QIAN, Yimin**
**5)SIDDURI, Achyutharao**

(57) Abstract :
Provided herein are compounds of the formula (I): as well as pharmaceutically acceptable salts thereof wherein the substituents are as those disclosed in the specification. These compounds and the pharmaceutical compositions containing them are useful for the treatment of inflammatory diseases and disorders such as for example pulmonary fibrosis...

No. of Pages : 44 No. of Claims : 18

(12) PATENT APPLICATION PUBLICATION
(19) INDIA
(22) Date of filing of Application :07/11/2014

(21) Application No.9349/DELNP/2014 A
(43) Publication Date : 17/07/2015

(54) Title of the invention : CLEANING CLOTH FITTED WITH A RECESS CAPABLE OF BEING JOINED TO A MOP BASE

| | |
|---|---|
| (51) International classification | :A47L13/24,A47L13/256,A47L13/44 |
| (31) Priority Document No | :PD2012A000114 |
| (32) Priority Date | :13/04/2012 |
| (33) Name of priority country | :Italy |
| (86) International Application No | :PCT/IB2012/053893 |
| Filing Date | :30/07/2012 |
| (87) International Publication No | :WO 2013/153426 |
| (61) Patent of Addition to Application Number | :NA |
| Filing Date | :NA |
| (62) Divisional to Application Number | :NA |
| Filing Date | :NA |

(71)**Name of Applicant :**
**1)T.T.S. S.R.L.**
Address of Applicant :Viale dellArtigianato No. 12/14, 1-35010 S.Giustina in Colle (PD) Italy
(72)**Name of Inventor :**
**1)ZORZO, Renato**

(57) Abstract :
A cleaning cloth (2), and in particular a cleaning cloth for floors suitable for being attached to a mop base (9), and fitted with special coupling devices that make it easy to attach it to the mop base and ensure it is held securely.

No. of Pages : 14 No. of Claims : 8

(12) PATENT APPLICATION PUBLICATION
(21) Application No.9350/DELNP/2014 A
(19) INDIA
(22) Date of filing of Application :07/11/2014
(43) Publication Date : 17/07/2015

(54) Title of the invention : CLEANING CLOTH THAT CAN BE JOINED TO A MOP BASE

(51) International classification :A47L13/256,A47L13/16
(31) Priority Document No :PD2012A000113
(32) Priority Date :13/04/2012
(33) Name of priority country :Italy
(86) International Application No :PCT/IB2013/052799
Filing Date :08/04/2013
(87) International Publication No :WO 2013/153503
(61) Patent of Addition to Application Number :NA
Filing Date :NA
(62) Divisional to Application Number :NA
Filing Date :NA

(71)**Name of Applicant :**
**1)T.T.S. S.R.L.**
Address of Applicant :Viale dellArtigianato No.12/14, 1-35010 Santa Giustina in Colle PD Italy
(72)**Name of Inventor :**
**1)ZORZO, Renato**

(57) Abstract :
The invention concerns a cloth equipped along one of its lengthwise edges with a protrusion perpendicular or coplanar to the plane of the cleaning surfaces of said cloth; said protrusion being suitable for being joined to a mop base with a gripper mouth.

No. of Pages : 20 No. of Claims : 15

(12) PATENT APPLICATION PUBLICATION
(19) INDIA
(22) Date of filing of Application :13/11/2014
(21) Application No.9568/DELNP/2014 A
(43) Publication Date : 17/07/2015

(54) Title of the invention : ANTIMICROBIAL CHEMICAL COMPOSITIONS

| | |
|---|---|
| (51) International classification | :A01N59/16,A01N25/08,A01N25/10 |
| (31) Priority Document No | :13/448253 |
| (32) Priority Date | :16/04/2012 |
| (33) Name of priority country | :U.S.A. |
| (86) International Application No | :PCT/US2013/036672 |
| Filing Date | :15/04/2013 |
| (87) International Publication No | :WO 2013/158575 |
| (61) Patent of Addition to Application Number | :NA |
| Filing Date | :NA |
| (62) Divisional to Application Number | :NA |
| Filing Date | :NA |

(71)**Name of Applicant :**
**1)BUNGE AMORPHIC SOLUTIONS LLC**
Address of Applicant :50 Main Street, 7th Floor, White Plains, NY 10606 U.S.A.
(72)**Name of Inventor :**
**1)FOSCANTE, Raymond, E.**

(57) Abstract :
Antimicrobial chemical compositions comprise an aluminum phosphate (AlP) solid dispersed within a binding polymer, wherein one or more bioactive materials are disposed within AlP forming a bioactive AlP complex. The complex may comprise the bioactive material chemically bonded with the AlP , physically combined with the AlP , or a combination of both. The complex may be formed according to precipitation , condensation and sol- gel methods of forming. The complex is engineered to provide a controlled delivery of the bioactive material or a constituent thereof upon exposure to moisture to give a desired level of antimicrobial resistance to a film or composite formed from the composition of at least about 30 µg/m2, and may also provide a desired degree of corrosion resistance through the release of passivating phosphate anion. Such antimicrobial chemical compositions provide an improved degree of active, long- term resistance to a broad range of micro -organisms when compared to known antimicrobial chemical compositions.

No. of Pages : 83 No. of Claims : 126

(12) PATENT APPLICATION PUBLICATION
(19) INDIA
(22) Date of filing of Application :07/11/2014
(21) Application No.9355/DELNP/2014 A
(43) Publication Date : 17/07/2015

(54) Title of the invention : ROLLING BOOT WITH TRANSITION REGION

(51) International classification :F16D3/84
(31) Priority Document No :NA
(32) Priority Date :NA
(33) Name of priority country :NA
(86) International Application No :PCT/EP2012/002108
Filing Date :16/05/2012
(87) International Publication No :WO 2013/170867
(61) Patent of Addition to Application Number :NA
Filing Date :NA
(62) Divisional to Application Number :NA
Filing Date :NA

(71)**Name of Applicant :**
**1)GKN DRIVELINE INTERNATIONAL GMBH**
Address of Applicant :Hauptstrae 130, 53797 Lohmar Germany
(72)**Name of Inventor :**
**1)SCHUMACHER, Ralf**
**2)BUSCH, Winfried**
**3)DEISINGER, Markus**
**4)WETTE, Joachim**
**5)HILDEBRANDT, Wolfgang**
**6)SCHAFFERUS, Thomas**
**7)SCHMEINK, Achim**

(57) Abstract :
In order to provide for a rolling boot showing increased form stability compared to rolling boots known from the state of the art such a rolling boot is suggested comprising a first fastening region (12) for fastening the boot to a joint casing (82), a second fastening region (14) for fastening the boot to a shaft (74) and a fold region (16) between the first and the second fastening region with a first fold (22) near to the first fastening region (12) and a second fold (24) near to the second fastening region (14), wherein it comprises further between the first fastening region (12) and the first fold (22) a first transition region (18) comprising a first flange (26) neighbouring the first fastening region (12) with a bottom (38), wherein a ratio between a first minimal diameter Dj, defined by the bottom (38) of the first flange of the first transition region and a second maximal diameter D2, defined by the first fold (22), both if viewed in a longitudinal section direction along the main axis is between approximately 1:1.01 to approximately 1:1.25.

No. of Pages : 34 No. of Claims : 18

(12) PATENT APPLICATION PUBLICATION
(19) INDIA
(22) Date of filing of Application :07/11/2014
(21) Application No.9357/DELNP/2014 A
(43) Publication Date : 17/07/2015

(54) Title of the invention : ROLLER HEMMING DEVICE AND ROLLER HEMMING METHOD

(51) International classification :B21D39/02,B21D19/04
(31) Priority Document No :2012106870
(32) Priority Date :08/05/2012
(33) Name of priority country :Japan
(86) International Application No :PCT/JP2013/062944
Filing Date :08/05/2013
(87) International Publication No :WO 2013/168743
(61) Patent of Addition to Application Number :NA
Filing Date :NA
(62) Divisional to Application Number :NA
Filing Date :NA

(71)**Name of Applicant :**
**1)HONDA MOTOR CO. LTD.**
Address of Applicant :1 1 Minami Aoyama 2 chome Minato ku Tokyo 1078556 Japan
(72)**Name of Inventor :**
**1)YOSHIMICHI Hitoshi**
**2)MIWA Hiroshi**
**3)HIROSE Kazuya**

(57) Abstract :
A roller hemming device (1) is provided with: a large diameter roller (11) having a large tapered surface (111); and a small diameter roller (12) having a small cylindrical surface (123). The small diameter roller (12) is arranged on the same axis as the large diameter roller (11). The small diameter roller (12) and the large diameter roller (11) can be relatively displaced in the axial direction. The external diameter of the small cylindrical surface (123) is smaller than the minimum external diameter of the large tapered surface (111).

No. of Pages : 29 No. of Claims : 5

(12) PATENT APPLICATION PUBLICATION
(19) INDIA
(22) Date of filing of Application :07/11/2014
(21) Application No.9358/DELNP/2014 A
(43) Publication Date : 17/07/2015

(54) Title of the invention : COMPOSITIONS COMPRISING A BIOLOGICAL CONTROL AGENT AND AN INSECTICIDE

| | |
|---|---|
| (51) International classification | :A01N43/12,A01N47/06,A01N63/00 |
| (31) Priority Document No | :12169936.7 |
| (32) Priority Date | :30/05/2012 |
| (33) Name of priority country | :EPO |
| (86) International Application No | :PCT/EP2013/061033 |
| Filing Date | :29/05/2013 |
| (87) International Publication No | :WO 2013/178663 |
| (61) Patent of Addition to Application Number | :NA |
| Filing Date | :NA |
| (62) Divisional to Application Number | :NA |
| Filing Date | :NA |

(71)**Name of Applicant :**
**1)BAYER CROPSCIENCE AG**
Address of Applicant :Alfred Nobel- Strasse 50, 40789 Monheim Germany
(72)**Name of Inventor :**
**1)HELLWEGE, Elke**
**2)ANDERSCH, Wolfram**
**3)SPRINGER, Bernd**
**4)STENZEL, Klaus**

(57) Abstract :
The present invention relates to a composition comprising at least one biological control agent selected from the group consisting of AQ746 (NRRL Accession No. B-21 618) AQ726 (NRRL Accession No B-21664) (NRRL Accession No. B-30087) AQ717 (NRRL Accession No. B-21662) AQ175 (ATCC Accession No. 55608) AQ177 (ATCC Accession No. 55609) AQ178 (ATCC Accession No. 53522) AQ743 (NRRL Accession No. B-21 665) AQ713 (NRRL Accession No. B-21661) AQ153 (ATCC Accession No. 55614) BD 32 (NRRL Accession No. B-21530) AQ52 (NRRL Accession No. B-21619) 620 (NRRL Accession No 30547) A3-5 (NRRL Accession No. 30548) AQ719 (NRRL Accession No. B-21663) (NRRL Accession No 30232) (NRRL Accession No. B-30145) BMP 123 AQ30002 (NRRL Accession No. B-50421) and AQ 30004 (NRRL Accession No. B -50455) and/or a mutant of these strains having all the identifying characteristics of the respective strain and/or a metabolite produced by the respective strain that exhibits activity against insects mites nematodes and/or phytopathogens and at least one insecticide selected from the group consisting of inhibitors of acetyl CoA carboxylase in a synergistlcally effective amount. Furthermore the present invention relates to the use of this composition as well as a method for reducing overall damage of plants and plant parts.

No. of Pages : 84 No. of Claims : 15

(12) PATENT APPLICATION PUBLICATION
(21) Application No.9561/DELNP/2014 A
(19) INDIA
(22) Date of filing of Application :13/11/2014
(43) Publication Date : 17/07/2015

(54) Title of the invention : NI BASED ALLOY

(51) International classification :C22C19/05,C22C30/00
(31) Priority Document No :2012129649
(32) Priority Date :07/06/2012
(33) Name of priority country :Japan
(86) International Application No :PCT/JP2013/065588
Filing Date :05/06/2013
(87) International Publication No :WO 2013/183670
(61) Patent of Addition to Application Number :NA
Filing Date :NA
(62) Divisional to Application Number :NA
Filing Date :NA

(71)**Name of Applicant :**
**1)NIPPON STEEL & SUMITOMO METAL CORPORATION**
Address of Applicant :6- 1 Marunouchi 2- chome, Chiyoda- ku ,Tokyo 1008071 Japan
(72)**Name of Inventor :**
**1)HAMAGUCHI Tomoaki**
**2)SEMBA Hiroyuki**
**3)OKADA Hirokazu**

(57) Abstract :
This Ni-based alloy i s constituted o f chemical components which comprise C , Si, Mn, Cr, Mo, Co, Al, Ti, B , P , S, and, as the remainder, Ni and impurities. If the average crystal grain diameter, in unit of mpi , of the g phase containea m the metallo - graphic structure of this Ni-based alloy is expressed by d , the average crystal grain diameter d, is 10-300 mpi . This metallographic structure has no precipitate grains that have a major-axis length of 100 n m or larger. If the grain boundary coverage index represen - ted by the average crystal grain diameter d and by the contents, in mass%, of some elements among the chemical components is ex pressed by p, this grain boundary coverage index p is equal to or greater than the value of 2 which is represented by the average crystal grain diameter d and by the contents, in mass%, of some elements among the chemical components.

No. of Pages : 48 No. of Claims : 5

(12) PATENT APPLICATION PUBLICATION
(21) Application No.9553/DELNP/2014 A
(19) INDIA
(22) Date of filing of Application :13/11/2014
(43) Publication Date : 17/07/2015

(54) Title of the invention : CONNECTION STRUCTURE CONNECTING HIGH FREQUENCY CIRCUIT AND WAVEGUIDE AND MANUFACTURING METHOD FOR SAME

(51) International classification :H01P5/107,H01P1/04
(31) Priority Document No :2012099655
(32) Priority Date :25/04/2012
(33) Name of priority country :Japan
(86) International Application No :PCT/JP2013/002730
Filing Date :23/04/2013
(87) International Publication No :WO 2013/161279
(61) Patent of Addition to Application Number :NA
Filing Date :NA
(62) Divisional to Application Number :NA
Filing Date :NA

(71)**Name of Applicant :**
**1)NEC CORPORATION**
Address of Applicant :7- 1 Shiba 5, chome, Minato- ku, Tokyo 1088001 Japan
(72)**Name of Inventor :**
**1)KAWATA Muneyasu**

(57) Abstract :
a new connection structure that connects a high frequency circuit and a waveguide, and enables standardization of a board aperture size without causing deterioration of a transmission path conversion characteristic; and a manufacturing method for said connection structure. [Solution] The invention comprises: a module board (1) on which the high frequency circuit (11) is mounted and that is provided with means (9 , 7) of conversion of a transmission path to the waveguide (3); a waveguide conductor (8) in which the waveguide is formed; and a parent board (2) that is provided on the waveguide conductor and comprises an aperture of a size larger than an aperture size (d) of the waveguide. The module board is affixed to the parent board so as to cover the aperture of the parent board, and a choke is formed using a space among the module board the parent board and the waveguide conductor.

No. of Pages : 18 No. of Claims : 8

(12) PATENT APPLICATION PUBLICATION
(19) INDIA
(22) Date of filing of Application :13/11/2014
(21) Application No.9554/DELNP/2014 A
(43) Publication Date : 17/07/2015

(54) Title of the invention : GLUCOKINASE ACTIVATOR COMPOSITIONS FOR THE TREATMENT OF DIABETES

(51) International classification :A61K38/26,A61K45/06,A61K31/426
(31) Priority Document No :61/648110
(32) Priority Date :17/05/2012
(33) Name of priority country :U.S.A.
(86) International Application No :PCT/US2013/041076
Filing Date :15/05/2013
(87) International Publication No :WO 2013/173417
(61) Patent of Addition to Application Number :NA
Filing Date :NA
(62) Divisional to Application Number :NA
Filing Date :NA

(71)**Name of Applicant :**
**1)TRANSTECH, PHARMA LLC**
Address of Applicant :4170 Mendenhall Oaks Parkway, High Point ,North Carolina 27265 U.S.A.
(72)**Name of Inventor :**
**1)VALCARCE LOPEZ, Maria Carmen**
**2)FONG ,Tung**

(57) Abstract :
The present invention relates to pharmaceutical compositions comprising {2- [3- cyclohexyl -3 (trans- 4- propoxy- cyclohexyl)- ureido]- thiazol- 5- ylsulfanyl}- acetic acid (FRI- 1) in combination with an anti- diabetic drug selected from the group consisting of metformin, sitagliptin or exenatide. The present invention also relates to the use of the pharmaceutical compositions in restoring insulin sensitivity and treating type II diabetes, including reducing body weight in subjects undergoing type II diabetes treatment.

No. of Pages : 36 No. of Claims : 23

(12) PATENT APPLICATION PUBLICATION
(19) INDIA
(22) Date of filing of Application :13/11/2014
(21) Application No.9555/DELNP/2014 A
(43) Publication Date : 17/07/2015

(54) Title of the invention : CONTROL DEVICE FOR SOLAR BATTERY

(51) International classification :G05F1/67
(31) Priority Document No :2012112308
(32) Priority Date :16/05/2012
(33) Name of priority country :Japan
(86) International Application No :PCT/JP2013/051309
Filing Date :23/01/2013
(87) International Publication No :WO 2013/172053
(61) Patent of Addition to Application Number :NA
Filing Date :NA
(62) Divisional to Application Number :NA
Filing Date :NA

(71)**Name of Applicant :**
**1)HITACHI INDUSTRIAL EQUIPMENT SYSTEMS CO.LTD**
Address of Applicant :3- Kanda Neribei- cho, Chiyoda- ku, Tokyo 1010022 Japan
(72)**Name of Inventor :**
**1)NAKAMURA, Akihiro**
**2)KOHNO, Tohru**
**3)MATSUNAGA, Shunsuke**
**4)SHOU Ken**

(57) Abstract :
The present invention is a control device for a solar battery which is capable of setting search points for which power loss accompanying variation in amount of solar radiation is reduced more. A power conditioner (2) has: a current sensor (11) which detects an output current of a solar battery; an extreme value monitoring unit (6) which, with a current value obtained from the current sensor (11) as input, assesses whether or not an operating power value of the solar battery is an extreme value, and on the basis of the assessment result, stores a voltage value and a current value which have been assessed to be extreme values; and a fluctuation determination unit (17a) which, on the basis of the ratio of the current value obtained from the current sensor (11) to an output current value of the solar battery when assessed to be an extreme value, sets a voltage width when performing an extreme value search of voltage- power characteristics of the solar battery.

No. of Pages : 65 No. of Claims : 12

(12) PATENT APPLICATION PUBLICATION
(19) INDIA
(22) Date of filing of Application :13/11/2014
(21) Application No.9556/DELNP/2014 A
(43) Publication Date : 17/07/2015

(54) Title of the invention : ALUMINUM PHOSPHATES COMPOSITIONS COMPRISING ALUMINUM PHOSPHATE AND METHODS MAKING THE FOR SAME

(51) International classification :C09C1/40,C01B25/36,C01B25/40
(31) Priority Document No :13/448271
(32) Priority Date :16/04/2012
(33) Name of priority country :U.S.A.
(86) International Application No :PCT/US2013/035770
Filing Date :09/04/2013
(87) International Publication No :WO 2013/158409
(61) Patent of Addition to Application Number :NA
Filing Date :NA
(62) Divisional to Application Number :NA
Filing Date :NA

(71)**Name of Applicant :**
**1)BUNGE AMORPHIC SOLUTIONS LLC**
Address of Applicant :50 Main Street 7th Floor, White Plains ,New York 10606 U.S.A.
(72)**Name of Inventor :**
**1)FOSCANTE, Raymond E.**
**2)JOHNSON, Neil Maynard**
**3)TAVOLARA, Yucel Burdurlu**
**4)HARLESS, Douglas Malcolm**
**5)MICHA- SCHAMA Melanie Astrid**

(57) Abstract :
APs are made by binary condensation via base to acid or acid to base routes. In the base to acid route an aluminum hydroxide slurry is added to phosphoric acid that reacts to produce an aluminum phosphate condensate. In the acid to base route phosphoric acid is added to an aluminum hydroxide slurry that reacts to produce an aluminum phosphate condensate. In an alternative base- to- acid route an acidic aluminum phosphate is first made by adding phosphoric acid to a first amount of aluminum hydroxide slurry, and such acidic aluminum phosphate is added to a remaining amount of aluminum hydroxide slurry to react and produce an aluminum phosphate condensate. The reactions can be controlled to form an- in- situ layered aluminum phosphate. Soformed APs can be amorphous, crystalline, or a combination thereof , and have low oil absorption and surface area making them particularly useful in such end- use applications as extender pigments in coating compositions replacing up to 70wt% of TiO2.

No. of Pages : 30 No. of Claims : 78

(12) PATENT APPLICATION PUBLICATION
(19) INDIA
(22) Date of filing of Application :13/11/2014
(21) Application No.9569/DELNP/2014 A
(43) Publication Date : 17/07/2015

(54) Title of the invention : METHOD FOR CONTROLLING THE PITCH ANGLE OF AT LEAST ONE WIND TURBINE BLADE

(51) International classification :F03D7/02
(31) Priority Document No :12168478.1
(32) Priority Date :18/05/2012
(33) Name of priority country :EPO
(86) International Application No :PCT/EP2013/059800
Filing Date :13/05/2013
(87) International Publication No :WO 2013/171154
(61) Patent of Addition to Application Number :NA
Filing Date :NA
(62) Divisional to Application Number :NA
Filing Date :NA

(71)**Name of Applicant :**
**1)ROMO WIND AG**
Address of Applicant :Baarerstrasse 80, CH -6300 Zug Switzerland
(72)**Name of Inventor :**
**1)HANSEN, Jesper Kj¦r**
**2)H˜JSTRUP J¸rgen**

(57) Abstract :
The invention regards a method for controlling the pitch angle of at least one wind turbine blade in a rotor connected to a main shaft on a wind turbine, the method comprises the steps, of determining; a first component of the wind vector which is upwind horizontal and aligned with the main shaft direction and ,a second component of the wind vector which is upwind , perpendicular to the first component of the wind vector , wherein the first component of the wind vector and the second component of the wind vector are determined by use of at least one ultrasonic sensor mounted on the rotor , whereby the pitch angle is controlled based on the first component of the wind vector and the second component of the wind vector.

No. of Pages : 20 No. of Claims : 15

(12) PATENT APPLICATION PUBLICATION
(19) INDIA
(22) Date of filing of Application :13/11/2014
(21) Application No.9570/DELNP/2014 A
(43) Publication Date : 17/07/2015

(54) Title of the invention : SYSTEM AND METHOD FOR SUPPORTING SAME NUMBER USING SRVCC

(51) International classification :H04W36/14
(31) Priority Document No :201210281802.5
(32) Priority Date :09/08/2012
(33) Name of priority country :China
(86) International Application No :PCT/CN2013/077940
Filing Date :25/06/2013
(87) International Publication No :WO 2014/023139
(61) Patent of Addition to Application Number :NA
Filing Date :NA
(62) Divisional to Application Number :NA
Filing Date :NA

(71)**Name of Applicant :**
**1)ZTE CORPORATION**
Address of Applicant :ZTE Plaza, Keji Road South, Hi- Tech Industrial Park, Nanshan, Shenzhen ,Guangdong ,518057 China
(72)**Name of Inventor :**
**1)GAO Yang**

(57) Abstract :
Provided are a system and method for supporting the same number using SRVCC. The system for supporting the same number using SRVCC of the present invention comprises: an IMS network , a CS network a first terminal device and a second terminal device , wherein the first terminal device is used for establishing a session between the IMS network and the second terminal device using a subscriber number , and is also used for establishing a session between the CS network ,and the second terminal device using the subscriber number when being switched from the IMS network to the CS network while it is a calling party. The method can support an SRVCC system to establish sessions among different networks using the same number during domain switching , improve the operating efficiency of the SRVCC system , and facilitate the use by users.

No. of Pages : 27 No. of Claims : 10

(12) PATENT APPLICATION PUBLICATION
(21) Application No.9571/DELNP/2014 A
(19) INDIA
(22) Date of filing of Application :13/11/2014
(43) Publication Date : 17/07/2015

(54) Title of the invention : ORALLY AVAILABLE PHARMACEUTICAL FORMULATION SUITABLE FOR IMPROVED MANAGEMENT OF MOVEMENT DISORDERS

(51) International classification :A61K9/22,A61K9/52,A61K45/06
(31) Priority Document No :PA 2012 70196
(32) Priority Date :18/04/2012
(33) Name of priority country :Denmark
(86) International Application No :PCT/DK2013/050111
Filing Date :18/04/2013
(87) International Publication No :WO 2013/156035
(61) Patent of Addition to Application Number :NA
Filing Date :NA
(62) Divisional to Application Number :NA
Filing Date :NA

(71)**Name of Applicant :**
**1)CONTERA PHARMA APS**
Address of Applicant :Kv¦sthusgade 5C 4., DK -1251 K¸benhavn K Denmark
(72)**Name of Inventor :**
**1)HANSEN John Bondo**
**2)THOMSEN Mikael S.**
**3)MIKKELSEN Jens D.**
**4)NIELSEN Peter Gudmund**
**5)KREILGAARD Mads**

(57) Abstract :
The present invention provides a pharmaceutical formulation for oral administration comprising an agonist of two or more of the 5-HT1B , 5- HT1D and 5- HT1F receptors, such as a triptan , e.g. zolmitriptan , in a matrix constituent with extended release characteristics , and further comprising a 5 -HT1A- R agonist , such as buspirone , in a constituent with immediate release characteristics. The special formulation is particularly well -suited for use in the treatment of movement disorders by combining the two active ingredients in a manner that achieves synergy from both the combination per se and the special release parameters of the pharmaceutical formulation , allowing for ease of administration and reducing the risk of adverse effects of each of the two active ingredients.

No. of Pages : 79 No. of Claims : 47

(12) PATENT APPLICATION PUBLICATION
(19) INDIA
(22) Date of filing of Application :13/11/2014
(21) Application No.9572/DELNP/2014 A
(43) Publication Date : 17/07/2015

(54) Title of the invention : CONTROL DEVICE FOR VEHICLE TRANSMISSION

(51) International classification :F16D48/02,F02D29/00,F16H37/02
(31) Priority Document No :NA
(32) Priority Date :NA
(33) Name of priority country :NA
(86) International Application No :PCT/JP2013/061249
Filing Date :16/04/2013
(87) International Publication No :WO 2014/170950
(61) Patent of Addition to Application Number :NA
Filing Date :NA
(62) Divisional to Application Number :NA
Filing Date :NA

(71)**Name of Applicant :**
**1)TOYOTA JIDOSHA KABUSHIKI KAISHA**
Address of Applicant :1, Toyota- cho ,Toyota- shi, Aichi, 4718571 Japan
(72)**Name of Inventor :**
**1)MATSUO Kenji**
**2)NAKADA Hirofumi**
**3)YOSHIDA Michio**
**4)INOUE Daisuke**
**5)AYABE Atsushi**
**6)KIMURA Motonori**
**7)ISHIKAWA Shuhei**
**8)HINO Akira**
**9)KONDO Hiroki**

(57) Abstract :
A control device for a vehicle transmission equipped with: a friction engagement mechanism for selectively transmitting torque from an input shaft to a power train, and having a continuously variable transmission mechanism capable of continuously changing the gear ratio and a power train having a fixed gear ratio which are provided in parallel between an input shaft to which torque is transmitted from a drive- power source and an output shaft for outputting torque to the drive wheels; and a meshing- type engagement mechanism which makes the power train capable of selectively transmitting torque between the input shaft and the output shaft and is arranged in series with the friction engagement mechanism on the downstream side of the friction engagement mechanism in the direction of transmission of torque heading from the input shaft to the output shaft. The control device for the vehicle transmission is configured in a manner such that when transitioning from a state in which the friction engagement mechanism and the meshing- type engagement mechanism are both open and the power train is not capable of transmitting torque to a state in which the meshing- type engagement mechanism is engaged and the power train is capable of transmitting torque to the output shaft , the torque capacity of the friction engagement mechanism is increased to a torque capacity of a level at which the power train rotates , without delaying the start of the engagement of the meshing type engagement mechanism.

No. of Pages : 63 No. of Claims : 13

(12) PATENT APPLICATION PUBLICATION
(19) INDIA
(22) Date of filing of Application :13/11/2014
(21) Application No.9562/DELNP/2014 A
(43) Publication Date : 17/07/2015

(54) Title of the invention : METHOD OF MANUFACTURING AN ARTICLE

(51) International classification :A61C13/00,C25F3/26,C25F3/22
(31) Priority Document No :12167523.5
(32) Priority Date :10/05/2012
(33) Name of priority country :EPO
(86) International Application No :PCT/GB2013/051208
Filing Date :10/05/2013
(87) International Publication No:WO 2013/167903
(61) Patent of Addition to Application Number :NA
Filing Date :NA
(62) Divisional to Application Number :NA
Filing Date :NA

(71)**Name of Applicant :**
**1)RENISHAW PLC**
Address of Applicant :New Mills, Gloucestershire, Wotton-under- Edge ,Gloucestershire GL12 8JR U.K.
(72)**Name of Inventor :**
**1)BEEBY, David**
**2)FORMAN, Mark**

(57) Abstract :
A method of manufacturing an article, comprising taking an article formed in an initial state via an additive manufacturing process and performing a second manufacturing process to transform the article into a second state , which comprises mounting the article in a holding device , processing at least one first feature on the article , which comprises processing at least one set of mounting features on the article , re -mounting the article via the at least one set of mounting features , and then processing at least one second feature on the article.

No. of Pages : 39 No. of Claims : 17

(12) PATENT APPLICATION PUBLICATION
(19) INDIA
(22) Date of filing of Application :13/11/2014
(21) Application No.9563/DELNP/2014 A
(43) Publication Date : 17/07/2015

(54) Title of the invention : NOVEL POLYMERIC PHOTOINITIATORS AND PHOTOINITIATOR MONOMERS

(51) International classification :C08F2/50,C08G71/00
(31) Priority Document No :PA 2012 70263
(32) Priority Date :16/05/2012
(33) Name of priority country :Denmark
(86) International Application No :PCT/DK2013/050145
Filing Date :14/05/2013
(87) International Publication No :WO 2013/170859
(61) Patent of Addition to Application Number :NA
Filing Date :NA
(62) Divisional to Application Number :NA
Filing Date :NA

(71)**Name of Applicant :**
**1)COLOPLAST A/S**
Address of Applicant :Holtedam 1, DK- 3050 Humlebaek Denmark
(72)**Name of Inventor :**
**1)MADSEN Niels J¸rgen**
**2)SEHNAL Petr**
**3)ANDERSON David George**
**4)NIELSEN Bo Rud**

(57) Abstract :
The present invention provides polymeric photoinitiators being co polymers of photoinitiator monomers and at least one further monomer as well as the photoinitiator monomers being intermediates in the preparation of such polymeric photoinitiators. Additionally there is provided polyacrylate obtained by radical polymerization of at least one acrylate monomer (Ac) in the presence of such polymeric photoinitiators. In the photoinitiator monomers and polymeric photoinitiators a photoinitiator moiety and a tertiary amine are incorporated into the photoinitiator structure.

No. of Pages : 104 No. of Claims : 50

(12) PATENT APPLICATION PUBLICATION
(19) INDIA
(22) Date of filing of Application :13/11/2014
(21) Application No.9565/DELNP/2014 A
(43) Publication Date : 17/07/2015

(54) Title of the invention : CHIP CARD DEVICE AND METHOD FOR MANUFACTURE THEREOF

(51) International classification :G06K19/04,G06K19/077
(31) Priority Document No :2008844
(32) Priority Date :18/05/2012
(33) Name of priority country :Netherlands
(86) International Application No :PCT/NL2013/050370
Filing Date :21/05/2013
(87) International Publication No :WO 2013/172715
(61) Patent of Addition to Application Number :NA
Filing Date :NA
(62) Divisional to Application Number :NA
Filing Date :NA

(71)**Name of Applicant :**
**1)WILLEMSEN, Louis Rinze Henricus Adrianus**
Address of Applicant :B4 L6 Spinola Portofino, Las Pinas City ,Almanza 2 Phillipines
(72)**Name of Inventor :**
**1)WILLEMSEN ,Louis Rinze Henricus Adrianus**

(57) Abstract :
The invention relates to a chip card device. This comprises a card like carrier having received therein a semiconductor substrate in the form of a chip. The semiconductor substrate comprises at least a memory element and is provided with contact surfaces which are accessible on the surface of the card- like carrier to enable reading of the memory element therewith. The card like carrier comprises a linear fold line configured for placing on or close to a card part comprising the contact surfaces, a further card part situated on the side of the fold line remote from the card part.

No. of Pages : 17 No. of Claims : 16

(12) PATENT APPLICATION PUBLICATION
(21) Application No.9566/DELNP/2014 A
(19) INDIA
(22) Date of filing of Application :13/11/2014
(43) Publication Date : 17/07/2015

(54) Title of the invention : FOLDABLE TYRE METHOD AND USE

(51) International classification :B60C3/08
(31) Priority Document No :1254735
(32) Priority Date :24/05/2012
(33) Name of priority country :France
(86) International Application No :PCT/EP2013/060008
Filing Date :15/05/2013
(87) International Publication No :WO 2013/174687
(61) Patent of Addition to Application Number :NA
Filing Date :NA
(62) Divisional to Application Number :NA
Filing Date :NA

(71)**Name of Applicant :**
**1)COMPAGNIE GENERALE DES ETABLISSEMENTS MICHELIN**
Address of Applicant :12 Cours Sablon, F- 63000 Clermont, Ferrand France
**2)MICHELIN RECHERCHE ET TECHNIQUE S.A.**
(72)**Name of Inventor :**
**1)BESTGEN, Luc**
**2)VILCOT ,Florian**

(57) Abstract :
The invention relates to a foldable tyre for a passenger vehicle, comprising at least one casing ply and at least one inextensible bracing ply radially inside a tread (2), two bead fillers (4) and two sidewalls (3), said bead fillers (4) including a bead wire defining , in a completely stress- free state , a mean line forming a substantially circular closed curve in a circumferential plane. The bead wire of each bead filler is flexible, and once the tyre has been folded , the mean line of the bead wire simultaneously defines a first curvature and a second curvature (5 , 6) that are interconnected by a third connecting curvature (7), the projection of said first, second and third curvatures of the folded tyre in an axial plane defining the two- dimensional volume of the folded tyre by a total perimeter P =[3x(2H+A)] H being the height of the sidewall and A being the width of the tyre. The invention also relates to a folding method.

No. of Pages : 16 No. of Claims : 9

(12) PATENT APPLICATION PUBLICATION
(19) INDIA
(22) Date of filing of Application :13/11/2014
(21) Application No.9567/DELNP/2014 A
(43) Publication Date : 17/07/2015

(54) Title of the invention : RESCUE PERFORMANCE METRIC

(51) International classification :G06F19/00
(31) Priority Document No :61/643540
(32) Priority Date :07/05/2012
(33) Name of priority country :U.S.A.
(86) International Application No :PCT/US2013/030664
Filing Date :13/03/2013
(87) International Publication No :WO 2013/169346
(61) Patent of Addition to Application Number :NA
Filing Date :NA
(62) Divisional to Application Number :NA
Filing Date :NA

(71)**Name of Applicant :**
**1)ZOLL MEDICAL CORPORATION**
Address of Applicant :269 Mill Road, Chelmsford, Massachusetts 01824- 4105 U.S.A.
(72)**Name of Inventor :**
**1)PACKER, Richard A.**
**2)FREEMAN, Gary A.**
**3)SILVER ,Annemarie**

(57) Abstract :
A computer- implemented method for providing summary information for lifesaving activities is disclosed.

No. of Pages : 77 No. of Claims : 14

(12) PATENT APPLICATION PUBLICATION
(19) INDIA
(22) Date of filing of Application :07/11/2014
(21) Application No.9373/DELNP/2014 A
(43) Publication Date : 17/07/2015

(54) Title of the invention : INTEGRATED ICE AND BEVERAGE DISPENSER

(51) International classification :F25C5/00
(31) Priority Document No :61/688238
(32) Priority Date :10/05/2012
(33) Name of priority country :U.S.A.
(86) International Application No :PCT/US2013/039882
Filing Date :07/05/2013
(87) International Publication No :WO 2013/169732
(61) Patent of Addition to Application Number :NA
Filing Date :NA
(62) Divisional to Application Number :NA
Filing Date :NA

(71)**Name of Applicant :**
**1)LANCER CORPORATION**
Address of Applicant :6655 Lancer Blvd., San Antonio, TX 78219 U.S.A.
(72)**Name of Inventor :**
**1)BAMBERGER, Dodge**
**2)GONZALEZ, Mauro**
**3)PEREZ, Carlos**
**4)GOOD, Merrill**

(57) Abstract :
An automated ice dispenser (30) decouples the action of agitating ice stored in an ice bin (69) and the action of dispensing the ice and additionally uses a controlled action to dispense the ice. Agitation is achieved with a horizontally mounted agitator (91). Ice is dispensed with a horizontally mounted auger (124). The ice dispenser (30) uses the force created by the auger (124) to push the ice through an opening (71) and out of the bin (69), making the dispensing more consistent and providing the ability to overcome clumping. By making the agitation action independent of the dispensing action the incidence of clumping is reduced. Agitation is controlled by software whereunder the agitator (91) turns on based on the cumulative run time of the auger (124). Auger run time and agitation time (as well as other configurable parameters) are adjustable by DIP switches (134) on a control board (133).

No. of Pages : 46 No. of Claims : 26

(12) PATENT APPLICATION PUBLICATION
(19) INDIA
(22) Date of filing of Application :07/11/2014
(21) Application No.9374/DELNP/2014 A
(43) Publication Date : 17/07/2015

(54) Title of the invention : MODULAR WIRELESS POWER LIGHT AND AUTOMATION CONTROL

(51) International classification :G06F13/12,G08C17/02,G06F13/00
(31) Priority Document No :61/641166
(32) Priority Date :01/05/2012
(33) Name of priority country :U.S.A.
(86) International Application No :PCT/AU2013/000260
Filing Date :15/03/2013
(87) International Publication No :WO 2013/163674
(61) Patent of Addition to Application Number :NA
Filing Date :NA
(62) Divisional to Application Number :NA
Filing Date :NA

(71)**Name of Applicant :**
**1)XITEL PTY LIMITED**
Address of Applicant :5436 Bay Hill Terrace, Sanctuary Cove,Queensland 4212 Australia
(72)**Name of Inventor :**
**1)DAVIS, Barrie**
**2)DAVIS, Benjamin**
**3)DAVIS, Matthew**

(57) Abstract :
A device and method for controlling a host apparatus (300) through a wireless link with a personal controller (10). The device includes a wireless communications module (202) configured to communicate with personal controller (10) via a peer-to-peer communications standard. The device connects to host apparatus (300) via a plug and receptacle interface (206) which includes power and signal pins. The device simulates an actuation signal using a reed relay (216) to cause host apparatus (300) to perform a function.

No. of Pages : 34 No. of Claims : 46

(12) PATENT APPLICATION PUBLICATION
(19) INDIA
(22) Date of filing of Application :07/11/2014
(21) Application No.9376/DELNP/2014 A
(43) Publication Date : 17/07/2015

(54) Title of the invention : COMPOSITION FOR THE PRODUCTION OF HYDROPHILIC POLYSTYRENE MATERIAL

(51) International classification :C08L25/06,C08L71/02,B65D81/26
(31) Priority Document No :12003707.2
(32) Priority Date :09/05/2012
(33) Name of priority country :EPO
(86) International Application No :PCT/EP2013/001138
Filing Date :17/04/2013
(87) International Publication No :WO 2013/167229
(61) Patent of Addition to Application Number :NA
Filing Date :NA
(62) Divisional to Application Number :NA
Filing Date :NA

(71)**Name of Applicant :**
**1)CLARIANT INTERNATIONAL LTD**
Address of Applicant :Rothausstrasse 61, CH-4132 Muttenz VIRGIN ISLANDS
(72)**Name of Inventor :**
**1)KOLDITZ, Pirko**
**2)LIEBEHENTSCHEL, Lutz**

(57) Abstract :
The invention relates to a composition Z comprising a component B1, a component B2, a component D a component E and a component P, wherein the component B1 is a polyethylene glycol having a hydroxyl number of from 25 to 600 mg KOH/g and an average molecular weight of 200 to 4000 g/mol; the component B2 is a polyethylene glycol having a hydroxyl number of from 0.1 to 24 mg KOH/g and an average molecular weight of higher than 4000 to about 10 000 000 g/mol; the component D is an earth alkali carbonate, the component E is a phyllosilicate, and the component P is a polystyrene and/or an alloy thereof. Composition Z is suitable to increase the hydrophilic properties of processed solid or foamed polystyrene material, especially for making a film sheet or food tray.

No. of Pages : 22 No. of Claims : 15

(12) PATENT APPLICATION PUBLICATION
(19) INDIA
(22) Date of filing of Application :13/11/2014
(21) Application No.9582/DELNP/2014 A
(43) Publication Date : 17/07/2015

(54) Title of the invention : TUMOR CELL ISOLATION/PURIFICATION PROCESS AND METHODS FOR USE THEREOF

(51) International classification :G01N33/574,G01N33/15,C12N5/07
(31) Priority Document No :61/647248
(32) Priority Date :15/05/2012
(33) Name of priority country :U.S.A.
(86) International Application No :PCT/US2013/031300
Filing Date :14/03/2013
(87) International Publication No :WO 2013/172955
(61) Patent of Addition to Application Number :NA
Filing Date :NA
(62) Divisional to Application Number :NA
Filing Date :NA

(71)**Name of Applicant :**
**1)DIATECH ONCOLOGY, LLC**
Address of Applicant :9208 Heritage Drive, Brentwood, TN 37027 U.S.A.
(72)**Name of Inventor :**
**1)PRESANT Cary**
**2)PERREE Mathieu**
**3)HALLQUIST Allan**

(57) Abstract :
Methods of isolating and purifying hematologic or non hernatologic tumor cells useful a variety of assays and procedures including tumor drug efficacy screening such as Microcuiture Kinetic assays are disclosed herein. Further Microcuiture Kinetic assays and methods suitable for comparing the relative efficacy of generic versus proprietary anti cancer drugs are also disclosed.

No. of Pages : 71 No. of Claims : 26

(12) PATENT APPLICATION PUBLICATION
(19) INDIA
(22) Date of filing of Application :13/11/2014
(21) Application No.9583/DELNP/2014 A
(43) Publication Date : 17/07/2015

(54) Title of the invention : KERNEL LEVEL SECURITY AGENT

(51) International classification :G06F21/50,G06F15/16,G06F9/22
(31) Priority Document No :13/492672
(32) Priority Date :08/06/2012
(33) Name of priority country :U.S.A.
(86) International Application No :PCT/US2013/040420
Filing Date :09/05/2013
(87) International Publication No :WO 2013/184281
(61) Patent of Addition to Application Number :NA
Filing Date :NA
(62) Divisional to Application Number :NA
Filing Date :NA

(71)**Name of Applicant :**
**1)CROWDSTRIKE, INC.,**
Address of Applicant :15440 Laguna Canyon Road Ste 250, Irvine, CA 92618 U.S.A.
(72)**Name of Inventor :**
**1)DIEHL, David F.**
**2)ALPEROVITCH, Dmitri**
**3)IONESCU, Ion0 Alexandru**
**4)KURTZ, George, Robert**

(57) Abstract :
A kernel- level security agent is described herein. The kernel -level security agent is configured to observe events, filter the observed events using configurable filters , route the filtered events to one or more event consumers , and utilize the one or more event consumers to take action based at least on one of the filtered events. In some implementations, the kernel- level security agent detects a first action associated with malicious code, gathers data about the malicious code, and in response to detecting subsequent action(s) of the malicious code ,performs a preventative action. The kernel- level security agent may also deceive an adversary associated with malicious code. Further, the kernel -level security agent may utilize a model representing chains of execution activities and may take action based on those chains of execution activities.

No. of Pages : 45 No. of Claims : 33

(12) PATENT APPLICATION PUBLICATION
(19) INDIA
(22) Date of filing of Application :07/11/2014
(21) Application No.9363/DELNP/2014 A
(43) Publication Date : 17/07/2015

(54) Title of the invention : METHOD FOR CLASSIFICATION OF A SAMPLE ON THE BASIS OF SPECTRAL DATA METHOD FOR CREATING A DATABASE AND METHOD FOR USING THIS DATABASE AND CORRESPONDING COMPUTER PROGRAM DATA STORAGE MEDIUM AND SYSTEM

(51) International classification :G06K9/00
(31) Priority Document No :2008620
(32) Priority Date :10/04/2012
(33) Name of priority country :Netherlands
(86) International Application No :PCT/NL2013/050260
Filing Date :10/04/2013
(87) International Publication No :WO 2013/154425
(61) Patent of Addition to Application Number :NA
Filing Date :NA
(62) Divisional to Application Number :NA
Filing Date :NA

(71)**Name of Applicant :**
**1)BIOSPARQ B.V.**
Address of Applicant :Galileiweg 8, NL-2333 BD Leiden Netherlands
(72)**Name of Inventor :**
**1)PARCHEN, Ren Raymond**
**2)VAN WUIJCKHUIJSE, Arjan Laurens**
**3)BOS, Adrianus**

(57) Abstract :
The invention relates to a method for classification of a sample on the basis of spectral data a method for creating a database and a method for using this database, and corresponding computer program data storage medium and system. The method comprises: a) obtaining at least two sets of first spectra for use as reference spectra, each set comprising spectra of reference samples belonging to the same class; b) determining for each of the reference spectra the value of the same at least one quantity related to a spectral feature; c) associating a probability to different values of the quantity on the basis of the determined values; d) obtaining a spectrum from the sample and determining the value of the same at least one quantity of this spectrum; and e) calculating on the basis of the probabilities and the value of the quantity for the obtained spectrum for each of said at least two classes a probability that the sample belongs to that class.

No. of Pages : 64 No. of Claims : 24

(12) PATENT APPLICATION PUBLICATION
(19) INDIA
(22) Date of filing of Application :13/11/2014
(21) Application No.9575/DELNP/2014 A
(43) Publication Date : 17/07/2015

(54) Title of the invention : A FERMENTATION AND SIMULATED MOVING BED PROCESS

(51) International classification :C12P7/06,C12P7/54,C12P7/16
(31) Priority Document No :61/650655
(32) Priority Date :23/05/2012
(33) Name of priority country :U.S.A.
(86) International Application No :PCT/US2013/042528
Filing Date :23/05/2013
(87) International Publication No :WO 2013/177466
(61) Patent of Addition to Application Number :NA
Filing Date :NA
(62) Divisional to Application Number :NA
Filing Date :NA

(71)**Name of Applicant :**
**1)LANZATECH NEW ZEALAND LIMITED**
Address of Applicant :24 Balfour Road, Parnell, Auckland 1052 New Zealand
**2)SCHULTZ, Michael Anthony**
(72)**Name of Inventor :**
**1)SCHULTZ, Michael Anthony**
**2)HAVILL, ALICE**
**3)OROSKAR, ANIL**

(57) Abstract :
The invention provides an improved method for the production , separation and recovery of one or more fermentation products from a fermentation broth. Further, the invention provides a method for increasing efficiency of a fermentation reaction. In particular, the invention relates to a fermentation system which incorporates a simulated moving bed for separation of fermentation products from a fermentation broth , and a corresponding method.

No. of Pages : 47 No. of Claims : 24

(12) PATENT APPLICATION PUBLICATION
(19) INDIA
(22) Date of filing of Application :13/11/2014
(21) Application No.9576/DELNP/2014 A
(43) Publication Date : 17/07/2015

(54) Title of the invention : LOW DENSITY HOT OR COLD ROLLED STEEL METHOD FOR IMPLEMENTING SAME AND USE THEREOF

(51) International classification :C22C38/02,C22C38/04,C22C38/06
(31) Priority Document No :PCT/FR2012/000220
(32) Priority Date :31/05/2012
(33) Name of priority country :France
(86) International Application No :PCT/IB2013/001057
Filing Date :27/05/2013
(87) International Publication No :WO 2013/179115
(61) Patent of Addition to Application Number :NA
Filing Date :NA
(62) Divisional to Application Number :NA
Filing Date :NA

(71)**Name of Applicant :**
**1)ARCELORMITTAL INVESTIGACIN Y DESARROLLO S.L.**
Address of Applicant :CL/Chavarri, 6, E- 48910 Sestao, Bizkaia Spain
(72)**Name of Inventor :**
**1)ZUAZO RODRIGUEZ ,Ian Alberto**
**2)PERLADE ,Astrid**
**3)GARAT, Xavier**

(57) Abstract :
The invention relates to a sheet of rolled steel having mechanical strength no lower than 600 MPa and elongation at break no lower than 20 % as well as to the method for manufacturing same. The chemical composition of the sheet of the invention includes: 0.10 % = C = 0.30 % , 6.0 % = Mn = 15.0 % , 6.0 % = Al = 15.0 % , and optionally one or more elements selected among: Si = 2.0 % , Ti = 0.2 % , V = 0.6 % and Nb = 0.3 % ,the rest of the composition comprising iron and inevitable impurities that result from the production process. The weight ratio of manganese to aluminium is such that: / > 1.0. The microstructure of the sheet according to the invention consists of ferrite , austenite and up to 5 % of kappa precipitates as a surface fraction.

No. of Pages : 32 No. of Claims : 22

(12) PATENT APPLICATION PUBLICATION
(19) INDIA
(22) Date of filing of Application :13/11/2014
(21) Application No.9577/DELNP/2014 A
(43) Publication Date : 17/07/2015

(54) Title of the invention : DIRECT VOLUME CONTROLLING DEVICE (DVCD) FOR RECIPROCATING POSITIVE DISPLACEMENT PUMPS

(51) International classification :F04B9/00
(31) Priority Document No :61/639524
(32) Priority Date :27/04/2012
(33) Name of priority country :U.S.A.
(86) International Application No :PCT/US2013/038440
Filing Date :26/04/2013
(87) International Publication No :WO 2013/163560
(61) Patent of Addition to Application Number :NA
Filing Date :NA
(62) Divisional to Application Number :NA
Filing Date :NA

(71)**Name of Applicant :**
**1)CHECKPOINT FLUIDIC SYSTEMS INTERNATIONAL LTD.**
Address of Applicant :21356 Marion Lane, Mandeville, LA 70471 U.S.A.
(72)**Name of Inventor :**
**1)ELLIOTT, Andrew C.**
**2)MATHERNE, JR., Don ,G.**

(57) Abstract :
A volume control device having a housing with an inlet passage an outlet passage, and an internal chamber communicating with the inlet and outlet passages. An accumulator is movably positioned within the internal chamber and substantially conforms with walls of the internal chamber the accumulator including an internal passage allowing fluid flow therethrough. An one 0way valve is positioned in the internal passage of the accumulator where the valve is biased in a closed position and an adjustable seat is positioned within the housing internal chamber between the accumulator and the housing outlet passage. A positioning mechanism engages the housing and adjustable seat whereby the position of the adjustable seat within the housing internal chamber may be adjustably fixed.

No. of Pages : 46 No. of Claims : 81

(12) PATENT APPLICATION PUBLICATION
(21) Application No.9423/DELNP/2014 A
(19) INDIA
(22) Date of filing of Application :10/11/2014
(43) Publication Date : 17/07/2015

(54) Title of the invention : CONFIGURATIONS AND METHODS OF VAPOR RECOVERY AND LNG SENDOUT SYSTEMS FOR LNG IMPORT TERMINALS

(51) International classification :F17C13/00,B25J1/02
(31) Priority Document No :13/467317
(32) Priority Date :09/05/2012
(33) Name of priority country :U.S.A.
(86) International Application No :PCT/US2013/040393
Filing Date :09/05/2013
(87) International Publication No :WO 2013/170063
(61) Patent of Addition to Application Number :NA
Filing Date :NA
(62) Divisional to Application Number :NA
Filing Date :NA

(71)**Name of Applicant :**
**1)FLUOR TECHNOLOGIES CORPORATION**
Address of Applicant :3 Polaris Way, Aliso Viejo, CA 92698 U.S.A.
(72)**Name of Inventor :**
**1)MAK, John**

(57) Abstract :
Energy efficiency and stability of LNG send out operations in LNG terminals is increased by addition of a surge tank and booster pump downstream of a boil- off gas condenser to produce a sub-cooled condensate that is used to provide refrigeration to an LNG transfer line and that can be fed to the high -pressure LNG send out pump without impacting the pressure of the main LNG send out line, and/or without necessitating a pressure reduction device in the main LNG send out line.

No. of Pages : 18 No. of Claims : 20

(12) PATENT APPLICATION PUBLICATION
(19) INDIA
(22) Date of filing of Application :10/11/2014
(21) Application No.9424/DELNP/2014 A
(43) Publication Date : 17/07/2015

(54) Title of the invention : BROADCAST ENERGY DEMAND SYSTEMS AND METHODS

(51) International classification :H04N21/63,H04N21/23
(31) Priority Document No :61/624303
(32) Priority Date :15/04/2012
(33) Name of priority country :U.S.A.
(86) International Application No :PCT/US2013/036231
Filing Date :11/04/2013
(87) International Publication No :WO 2013/158463
(61) Patent of Addition to Application Number :NA
Filing Date :NA
(62) Divisional to Application Number :NA
Filing Date :NA

(71)**Name of Applicant :**
**1)SWAN, LLC**
Address of Applicant :5050 Vista Blvd., Suit 102, Sparks, NV 89436 U.S.A.
(72)**Name of Inventor :**
**1)DONAHUE, Paul, W.**
**2)DANKWORTH, Jeffrey, A.**
**3)KAMEL, Michel ,Roger**
**4)LANPHER, Ted, W.**
**5)RAHILLY, Charles, E.**
**6)FISH, Laurence**

(57) Abstract :
A decision support system for energy use demand management manages energy consumption and costs. A one way broadcast communications capability transmits energy management data to a population of energy consumers. A receiver controller changes the energy consumption of an apparatus in response to receiving the energy management data. An energy consumption monitor determines energy consumption information related , at least in part, to the energy consumption of the apparatus, and provides energy consumption information through a feedback path that can be correlated with the energy management data. The receiver controller changes the energy consumption of the apparatus in response to an analysis of the energy consumption information.

No. of Pages : 61 No. of Claims : 54

(12) PATENT APPLICATION PUBLICATION
(21) Application No.9425/DELNP/2014 A
(19) INDIA
(22) Date of filing of Application :10/11/2014
(43) Publication Date : 17/07/2015

(54) Title of the invention : A USER EQUIPMENT SUPPORTING COMMUNICATION IN A MULTICARRIER RADIO COMMUNICATION SYSTEM AND A METHOD THEREIN FOR RECEIVING INFORMATION

(51) International classification :H04L5/00
(31) Priority Document No :NA
(32) Priority Date :NA
(33) Name of priority country :NA
(86) International Application No :PCT/SE2012/050723
Filing Date :27/06/2012
(87) International Publication No :WO 2014/003612
(61) Patent of Addition to Application Number :NA
Filing Date :NA
(62) Divisional to Application Number :NA
Filing Date :NA

(71)**Name of Applicant :**
**1)TELEFONAKTIEBOLAGET L M ERICSSON (PUBL)**
Address of Applicant :SE- 164 83 Stockholm Sweden
(72)**Name of Inventor :**
**1)BALDEMAIR, Robert**
**2)KOORAPAT,Y Havish**
**3)FRENNE, Mattias**
**4)LARSSON, Daniel**
**5)PARKVALL,, Stefan**
**6)CHENG, Jung- Fu**

(57) Abstract :
A User Equipment, UE, supporting communication in a multicarrier radio communication system and a method therein for receiving information from a Radio Base Station, RBS, are provided. The method comprises determining 310 a bandwidth by which the UE will receive information, the bandwidth comprising a plurality of subcarriers. The method also comprises adjusting 320 a bandwidth of the UE to correspond to the determined bandwidth by which the UE will receive information; and fine tuning 330 a local oscillator of the UE such that a centre frequency of a local oscillator does not coincide with a predetermined subcarrier transmitted from the RBS.

No. of Pages : 50 No. of Claims : 20

(12) PATENT APPLICATION PUBLICATION
(19) INDIA
(22) Date of filing of Application :10/11/2014
(21) Application No.9426/DELNP/2014 A
(43) Publication Date : 17/07/2015

(54) Title of the invention : APPARATUS AND METHOD FOR DOWNLINK SCHEDULING

(51) International classification :H04L5/00
(31) Priority Document No :61/645653
(32) Priority Date :11/05/2012
(33) Name of priority country :U.S.A.
(86) International Application No :PCT/SE2013/000065
Filing Date :08/05/2013
(87) International Publication No :WO 2013/169165
(61) Patent of Addition to Application Number :NA
Filing Date :NA
(62) Divisional to Application Number :NA
Filing Date :NA

(71)**Name of Applicant :**
**1)TELEFONAKTIEBOLAGET L M ERICSSON (PUBL)**
Address of Applicant :S- 164 83 Stockholm Sweden
(72)**Name of Inventor :**
**1)FRENNE, Mattias**
**2)LARSSON, Daniel**
**3)LINDBOM, Lars**

(57) Abstract :
Example embodiments presented herein are directed towards a base station (401) and corresponding method for scheduling a downlink broadcast transmission using PDSCH. The base station (401) is also configured to provide an OFDM PDSCH to a wireless terminal (505A) which monitors ePDCCH for receiving downlink control data. Thus, by applying such a symbol a wireless terminal (505A) which monitors ePDCCH and a wireless terminal (505B) which monitors PDCCH may receive the same downlink broadcast transmission on PDSCH. Example embodiments are also directed towards a wireless terminal (606A) for receiving such downlink broadcast transmissions.

No. of Pages : 50 No. of Claims : 29

(12) PATENT APPLICATION PUBLICATION
(19) INDIA
(22) Date of filing of Application :30/03/2012
(21) Application No.987/DEL/2012 A
(43) Publication Date : 17/07/2015

(54) Title of the invention : NUTRACEUTICAL COMPOSITION AND PROCESS OF PREPARATION THEREOF

(51) International classification :C06C
(31) Priority Document No :NA
(32) Priority Date :NA
(33) Name of priority country :NA
(86) International Application No :NA
Filing Date :NA
(87) International Publication No :NA
(61) Patent of Addition to Application Number :NA
Filing Date :NA
(62) Divisional to Application Number :NA
Filing Date :NA

(71)**Name of Applicant :**
**1)DIRECTOR GENERAL, DEFENCE RESEARCH & DEVELOPMENT ORGANISATION**
Address of Applicant :MINISTRY OF DEFENCE, GOVT OF INDIA, DRDO BHAWAN, RAJAJII MARG, NEW DELHI - 110066 India
(72)**Name of Inventor :**
**1)HOTA, SUNIL KUMAR**
**2)HOTA, KALPANA BARHWAL**
**3)DHAR, PRIYANKA**
**4)CHAURASIA, OM PRAKASH**
**5)SINGH, HARSH PAL**
**6)SRIVASTAVA, RAVI BIHARI**
**7)SINGH, SHASHI BALA**

(57) Abstract :
This invention provides a composition derived from seabuckthorn (Hippophae rhamnoides), apricot (Prunus armeniaca) and rhodiola (Rhodiola imbricata). The nutraceutical composition employ novel combination of other additives to improve the aesthetic appeal confers adaptogenic properties, acts as an appetizer and is suitable for direct consumption by human beings.

No. of Pages : 38 No. of Claims : 13

(12) PATENT APPLICATION PUBLICATION
(19) INDIA
(22) Date of filing of Application :13/11/2014
(21) Application No.9573/DELNP/2014 A
(43) Publication Date : 17/07/2015

(54) Title of the invention : AN ELECTRICALLY HEATED PLANAR CATHODE

(51) International classification :H01J35/06
(31) Priority Document No :13/468886
(32) Priority Date :10/05/2012
(33) Name of priority country :U.S.A.
(86) International Application No :PCT/US2013/040553
Filing Date :10/05/2013
(87) International Publication No :WO 2013/170149
(61) Patent of Addition to Application Number :NA
Filing Date :NA
(62) Divisional to Application Number :NA
Filing Date :NA

(71)**Name of Applicant :**
**1)THERMO SCIENTIFIC PORTABLE ANALYTICAL INSTRUMENTS INC.**
Address of Applicant :2 Radcliff Road, Tewksbury- MA 01876 U.S.A.
(72)**Name of Inventor :**
**1)CARUSO, David,J.**
**2)DINSMORE, Mark, T.;**

(57) Abstract :
An electrically heated planar cathode for use in miniature x-ray tubes may be spiral design laser cut from a thin tantalum alloy ribbon foil (116) with grain stabilizing features. Bare ribbon is mounted to an aluminum nitride substrate (110) in a manner that is puts the ribbon in minimal tension before it is machined into the spiral pattern (118). The spiral pattern can be optimized for electrical , thermal , and emission characteristics.

No. of Pages : 13 No. of Claims : 18

(12) PATENT APPLICATION PUBLICATION
(19) INDIA
(22) Date of filing of Application :13/11/2014
(21) Application No.9574/DELNP/2014 A
(43) Publication Date : 17/07/2015

(54) Title of the invention : TWO STEP OPTIMIZATION FOR LIQUEFACTION OF BIOMASS

(51) International classification :C13K1/02,C07H1/00,B01J3/00
(31) Priority Document No :1250429-6
(32) Priority Date :30/04/2012
(33) Name of priority country :Sweden
(86) International Application No :PCT/SE2013/050478
Filing Date :30/04/2013
(87) International Publication No :WO 2013/165308
(61) Patent of Addition to Application Number :NA
Filing Date :NA
(62) Divisional to Application Number :NA
Filing Date :NA

(71)**Name of Applicant :**
**1)REAC FUEL AB**
Address of Applicant :John Ericssons vg 1, S -223 63 Lund Sweden
(72)**Name of Inventor :**
**1)JHANNESSON, Haukur;**
**2)GRAM, Andreas**
**3)CARLIUS ,Anders**
**4)KARLSSON, Gran**

(57) Abstract :
The present invention describes a process involving liquefaction of a biomass slurry by treatment in hot compressed water (HCW), said process comprising:- a first decomposition step being performed at an average pH level of at most 4.5, wherein a hemicellulose fraction in the biomass slurry is decomposed to water soluble mono and/or oligomers and wherein a cellulose fraction undergoes a pre- treatment for decrystallization of the cellulose polymer; - a separation step; and - a second decomposition step, wherein the cellulose fraction in the biomass slurry is decomposed to water soluble mono- and/or oligomers; wherein both of the first and second decomposition steps are performed at sub -critical temperatures implying relatively moderate conditions.

No. of Pages : 19 No. of Claims : 15

(12) PATENT APPLICATION PUBLICATION
(19) INDIA
(22) Date of filing of Application :13/11/2014
(21) Application No.9584/DELNP/2014 A
(43) Publication Date : 17/07/2015

(54) Title of the invention : PANTOTHENATE DERIVATIVES FOR THE TREATMENT OF NEUROLOGIC DISORDERS

(51) International classification :C07F9/24,A61P25/28,A61K31/661
(31) Priority Document No :61/639602
(32) Priority Date :27/04/2012
(33) Name of priority country :U.S.A.
(86) International Application No :PCT/US2013/038458
Filing Date :26/04/2013
(87) International Publication No :WO 2013/163576
(61) Patent of Addition to Application Number :NA
Filing Date :NA
(62) Divisional to Application Number :NA
Filing Date :NA

(71)**Name of Applicant :**
**1)RETROPHIN, INC.**
Address of Applicant :777 Third Avenue, 22nd Floor, New York, NY 10017 U.S.A.
**2)VAINO Andrew**
**3)BIESTEK Marek**
**4)SHKRELI Martin**
(72)**Name of Inventor :**
**1)VAINO, Andrew**
**2)BIESTEK, Marek**
**3)SHKRELI, Martin**

(57) Abstract :
The present disclosure relates to pantothenate derivatives for the treatment of neurologic disorders (such as pantothenate kinase - associated neurodegeneration), pharmaceutical compositions containing such compounds , and their use in treatment of neurologic disorders.

No. of Pages : 41 No. of Claims : 23

(12) PATENT APPLICATION PUBLICATION
(21) Application No.9395/DELNP/2014 A
(19) INDIA
(22) Date of filing of Application :07/11/2014
(43) Publication Date : 17/07/2015

(54) Title of the invention : A FABRICATED POLYMERIC STRIP FOR SOIL REINFORCEMENT AND OTHER USES

(51) International classification :B32B5/02,B32B5/22
(31) Priority Document No :1206298.0
(32) Priority Date :10/04/2012
(33) Name of priority country :U.K.
(86) International Application No :PCT/GB2013/050925
Filing Date :10/04/2013
(87) International Publication No :WO 2013/153385
(61) Patent of Addition to Application Number :NA
Filing Date :NA
(62) Divisional to Application Number :NA
Filing Date :NA

(71)**Name of Applicant :**
**1)MARTIN, Christopher**
Address of Applicant :16, Kentish Gardens, Tunbridge, Wells Kent, TN2 5XU U.K.
(72)**Name of Inventor :**
**1)MARTIN, Christopher**

(57) Abstract :
A strip webbing or ribbon which is fabricated from bundles of fibres which are laminated or encapsulated in a covering of a non woven fabric which may then be coated or impregnated with a polymer. The non woven fabric may be sewn or heat welded into position which along with the optional coating or impregnation helps to maintain the conformity or shape of the strip, webbing or ribbon. The colour , surface texture , printed surface , physical size and tensile strength are all changeable according to the end use.

No. of Pages : 15 No. of Claims : 15

(12) PATENT APPLICATION PUBLICATION
(19) INDIA
(22) Date of filing of Application :07/11/2014
(21) Application No.9368/DELNP/2014 A
(43) Publication Date : 17/07/2015

(54) Title of the invention : LUBRICANT COMPOSITION FOR AN ENGINE

(51) International classification :C10M161/00,C10N30/02,C10N30/04
(31) Priority Document No :12 54 149
(32) Priority Date :04/05/2012
(33) Name of priority country :France
(86) International Application No :PCT/EP2013/059267
Filing Date :03/05/2013
(87) International Publication No :WO 2013/164457
(61) Patent of Addition to Application Number :NA
Filing Date :NA
(62) Divisional to Application Number :NA
Filing Date :NA

(71)**Name of Applicant :**
**1)TOTAL MARKETING SERVICES**
Address of Applicant :24, Cours Michelet, F-92800 Puteaux France
**2)DOW GLOBAL TECHNOLOGIES LLC**
(72)**Name of Inventor :**
**1)LERASLE, Olivier**
**2)VALADE, Jr´me**
**3)KHELIDJ, Nadjet**

(57) Abstract :
The present invention relates to lubricant compositions for an engine including at least one base oil, at least one polymer for improving the viscosity index at least one polyalkylene glycol, obtained by polymerizing or copolymerizing alkylene oxides including 3 to 8 carbon atoms, at least of which is butylene oxide, the polyalkylene glycol content being 1 to 30% by weight relative to the total weight of lubricant composition, the upper limit of 30% being excluded.The use of at least one polyalkylene glycol, obtained by polymerizing or copolymerizing alkylene oxides including 3 to 8 carbon atoms, at least one of which is butylene oxide in a base oil enables a reduction in the wear of the connecting-rod bearings of internal combustion heat engines of vehicles having hybrid and/or micro-hybrid engines.

No. of Pages : 24 No. of Claims : 14

(12) PATENT APPLICATION PUBLICATION
(19) INDIA
(22) Date of filing of Application :07/11/2014
(21) Application No.9369/DELNP/2014 A
(43) Publication Date : 17/07/2015

(54) Title of the invention : SELECTING BETWEEN EQUAL COST SHORTEST PATHS IN A 802.1AQ NETWORK USING SPLIT TIEBREAKERS

| | |
|---|---|
| (51) International classification | :H04L12/703,H04L12/761,H04L12/707 |
| (31) Priority Document No | :13/452780 |
| (32) Priority Date | :20/04/2012 |
| (33) Name of priority country | :U.S.A. |
| (86) International Application No | :PCT/IB2013/052859 |
| Filing Date | :10/04/2013 |
| (87) International Publication No | :WO 2013/156903 |
| (61) Patent of Addition to Application Number | :NA |
| Filing Date | :NA |
| (62) Divisional to Application Number | :NA |
| Filing Date | :NA |

(71)**Name of Applicant :**
**1)TELEFONAKTIEBOLAGET L M ERICSSON (PUBL)**
Address of Applicant :S-164 83 Stockholm Sweden
(72)**Name of Inventor :**
**1)ALLAN, David Ian**

(57) Abstract :
A node in a communication network selects between equal cost shortest paths (ECSPs) using split tiebreakers. The node advertises multiple system identifiers (IDs) for that node, and each system ID is associated with a different set of traffic IDs that distinguish different virtual networks in the network. The node receives sets of system IDs for each of the other nodes in the network. After constructing a plurality of different ECSPs between two nodes the node selects one of the ECSPs for each traffic ID used between the two nodes. For a traffic ID, the node constructs path IDs for each of the ECSPs using one system ID of each node in the path that is associated with that traffic ID. Because of the configuration of the system IDs and the traffic IDs in the network traffic affected by a failure will be distributed across a plurality of surviving ECSPs.

No. of Pages : 44 No. of Claims : 20

(12) PATENT APPLICATION PUBLICATION
(19) INDIA
(22) Date of filing of Application :10/11/2014
(21) Application No.9419/DELNP/2014 A
(43) Publication Date : 17/07/2015

(54) Title of the invention : IMPROVED METHOD FOR APPLYING A COLD END COATING INTEGRATED IN GLASS CONTAINER MANUFACTURING PROCESS

(51) International classification :B05B13/04,C03C17/00
(31) Priority Document No :12167331.3
(32) Priority Date :09/05/2012
(33) Name of priority country :EPO
(86) International Application No :PCT/EP2013/059431
Filing Date :07/05/2013
(87) International Publication No :WO 2013/167558
(61) Patent of Addition to Application Number :NA
Filing Date :NA
(62) Divisional to Application Number :NA
Filing Date :NA

(71)**Name of Applicant :**
**1)ARKEMA VLISSINGEN B.V.**
Address of Applicant :Haven 9850, NL- 4389 Vlissingen Oost Netherlands
(72)**Name of Inventor :**
**1)HOEKMAN, Leendert, Cornelis**
**2)CONCETTA, STARRANTINO, Carmela, Maria**
**3)WAGEMAKERS, Joannes, Theodorus, Maria**
**4)MEURER, Oliver**

(57) Abstract :
The present invention relates to a coating line and a method for applying a protective coating to hollow glass containers integrated in glass container manufacturing process. In particular it relates to a coating line and method for applying a cold end coating to hollow glass containers. More particularly the present invention relates to a coating line comprising horizontal spray guns for applying a cold end coating to hollow glass containers in a single line and such a method for applying a cold end coating to hollow glass containers.

No. of Pages : 36 No. of Claims : 21

(12) PATENT APPLICATION PUBLICATION
(19) INDIA
(22) Date of filing of Application :13/11/2014
(21) Application No.9578/DELNP/2014 A
(43) Publication Date : 17/07/2015

(54) Title of the invention : BIOGAS REACTOR AND METHOD FOR PRODUCING BIOGAS WITH A BIOGAS REACTOR

(51) International classification :C12M1/113,C12M1/26
(31) Priority Document No :12169684.3
(32) Priority Date :28/05/2012
(33) Name of priority country :EPO
(86) International Application No :PCT/EP2013/060942
Filing Date :28/05/2013
(87) International Publication No :WO 2013/178621
(61) Patent of Addition to Application Number :NA
Filing Date :NA
(62) Divisional to Application Number :NA
Filing Date :NA

(71)**Name of Applicant :**
**1)ENERGIUTVECKLARNA NORDEN AB**
Address of Applicant :Stora Sjgesta Jrngrden 13, S- 590 76 Vreta Kloster Sweden
(72)**Name of Inventor :**
**1)BERG, Lars**

(57) Abstract :
Biogas reactor 1 comprising a housing 7with an inlet 2 for organic material, a biogas outlet 3, a shaft 5 having a material displacement device 6 fixed thereto wherein the biogas reactor 1 has at least two outlets 12 , 13 in a gas producing section 10 of the reactor 1 from which organic material can be returned to the inlet 2. A method using the biogas reactor 1 for production of biogas is also disclosed.

No. of Pages : 24 No. of Claims : 14

(12) PATENT APPLICATION PUBLICATION
(21) Application No.9579/DELNP/2014 A
(19) INDIA
(22) Date of filing of Application :13/11/2014
(43) Publication Date : 17/07/2015

(54) Title of the invention : RETORTABLE PACKAGE

(51) International classification :B65D81/20
(31) Priority Document No :61/641066
(32) Priority Date :01/05/2012
(33) Name of priority country :U.S.A.
(86) International Application No :PCT/US2013/039065
Filing Date :01/05/2013
(87) International Publication No :WO 2013/166148
(61) Patent of Addition to Application Number :NA
Filing Date :NA
(62) Divisional to Application Number :NA
Filing Date :NA

(71)**Name of Applicant :**
**1)BERRY PLASTICS CORPORATION**
Address of Applicant :101 Oakley Street, P.O. Box 959, Evansville, Indiana 47706 0959 U.S.A.
(72)**Name of Inventor :**
**1)MINNETTE ,Jeffrey C.**
**2)JOCHEM, Ken**

(57) Abstract :
A package in accordance with the present disclosure includes a lid adapted to mate with the brim of a container to close an opening into an interior product- storage region formed in the container. In illustrative embodiments , the package is configured to store food that has been placed in the interior product- storage region formed in the container in a variable -volume interior chamber bounded by the container and lid when the lid is mounted on the container brim. The package is retortable and portions are elastic to cause an increase in the volume of the variable- volume interior chamber during exposure of the retortable package to high temperatures in an oven for several minutes.

No. of Pages : 35 No. of Claims : 25

(12) PATENT APPLICATION PUBLICATION
(19) INDIA
(22) Date of filing of Application :07/11/2014
(21) Application No.9387/DELNP/2014 A
(43) Publication Date : 17/07/2015

(54) Title of the invention : VEHICLE POWER TRANSMISSION DEVICE

(51) International classification :F16H37/02
(31) Priority Document No :PCT/JP2012/063173
(32) Priority Date :23/05/2012
(33) Name of priority country :Japan
(86) International Application No :PCT/JP2013/064312
Filing Date :23/05/2013
(87) International Publication No :WO 2013/176208
(61) Patent of Addition to Application Number :NA
Filing Date :NA
(62) Divisional to Application Number :NA
Filing Date :NA

(71)**Name of Applicant :**
**1)TOYOTA JIDOSHA KABUSHIKI KAISHA**
Address of Applicant :1 Toyota cho Toyota shi Aichi 4718571 Japan
(72)**Name of Inventor :**
**1)NAKAGAWA, Hideki**
**2)YOSHIDA, Michio**
**3)NAKADA, Hirofumi**
**4)HABUCHI, Ryoji**

(57) Abstract :
A vehicle power transmission device in which the following are provided so as to enable the transmission of torque between an input shaft to which the torque output by a drive power source is input and an output shaft which outputs the torque: a continuously variable transmission which continuously varies the transmission ratio between the input shaft and the output shaft; and a gear train which has at least one transmission ratio which cannot be set using the continuously variable transmission. A forward/reverse switching mechanism is arranged on the same axial line as the input shaft the forward/reverse switching mechanism carrying out differential action using three rotary elements: an input element; an output element; and a reaction element which by stopping to rotate rotates the input element and the output element in opposite directions. The vehicle power transmission device is provided with: a first clutch mechanism which connects at least any two of the three rotary elements; a brake mechanism which stops the rotation of the reaction element; a second clutch mechanism in which the input element and the output shaft are connected through the continuously variable transmission and which transmits and cuts off the torque to a first torque transmission route from the input shaft to the output shaft via the continuously variable transmission; and a third clutch mechanism in which the output element and the output shaft are connected through the gear train and which transmits and cuts off the torque to a second torque transmission route from the output element to the output shaft via the gear train.

No. of Pages : 55 No. of Claims : 15

(12) PATENT APPLICATION PUBLICATION
(21) Application No.9389/DELNP/2014 A
(19) INDIA
(22) Date of filing of Application :07/11/2014
(43) Publication Date : 17/07/2015

(54) Title of the invention : COMMUNICATION SYSTEM WITH ADAPTIVE CONTROL CHANNEL RESOURCE ALLOCATION

(51) International classification :H04W72/12
(31) Priority Document No :1208236.8
(32) Priority Date :10/05/2012
(33) Name of priority country :U.K.
(86) International Application No :PCT/JP2013/062744
Filing Date :24/04/2013
(87) International Publication No :WO 2013/168664
(61) Patent of Addition to Application Number :NA
Filing Date :NA
(62) Divisional to Application Number :NA
Filing Date :NA

(71)**Name of Applicant :**
**1)NEC CORPORATION**
Address of Applicant :7- 1 Shiba 5- chome ,Minato- ku, Tokyo, 1088001 Japan
(72)**Name of Inventor :**
**1)LIANG, Caroline**
**2)AWAD, Yassin Aden**
**3)ARNOTT, Robert**

(57) Abstract :
A communication system is presented in which a communication device communicates in at least one communication cell operated by communication apparatus, using a plurality of subframes, wherein each subframe comprises a plurality of communication resources. A respective measure of communication quality associated with each of the communication resources is obtained and a search space, comprising a set of the communication resources, is defined based on the measures of communication quality. The mobile device searches for control information in the defined search space.

No. of Pages : 55 No. of Claims : 52

(12) PATENT APPLICATION PUBLICATION
(19) INDIA
(22) Date of filing of Application :08/11/2014
(21) Application No.9406/DELNP/2014 A
(43) Publication Date : 17/07/2015

(54) Title of the invention : METHODS AND NODES FOR MULTIPLE USER MIMO SCHEDULING AND POWER CONTROL

(51) International classification :H04W52/54,H04W52/42,H04W52/14
(31) Priority Document No :NA
(32) Priority Date :NA
(33) Name of priority country :NA
(86) International Application No :PCT/SE2012/050808
Filing Date :06/07/2012
(87) International Publication No :WO 2014/007712
(61) Patent of Addition to Application Number :NA
Filing Date :NA
(62) Divisional to Application Number :NA
Filing Date :NA

(71)**Name of Applicant :**
**1)Telefonaktiebolaget L M Ericsson (publ)**
Address of Applicant :S- 164 83 Stockholm Sweden
(72)**Name of Inventor :**
**1)FAN, Rui**
**2)LIU, Jinhua**
**3)LI, Chan**

(57) Abstract :
The present invention relates to a method in a first User Equipment, UE served by an RBS of a wireless network for uplink power control at MU-MIMO scheduling. The method comprises obtaining (510) a power adaptation parameter for use in uplink transmission power control when the first UE is scheduled in pair with a second UE, or is scheduled de- paired from the second UE. The method also comprises receiving (520) an indication from the radio base station to use the obtained power adaptation parameter in uplink transmission power control, and adapting (530) an uplink transmission power based on the obtained power adaptation parameter and the received indication. The present invention also relates to the corresponding method in the RBS, and to the UE and the RBS.

No. of Pages : 35 No. of Claims : 31

(12) PATENT APPLICATION PUBLICATION
(21) Application No.245/DEL/2015 A
(19) INDIA
(22) Date of filing of Application :28/01/2015
(43) Publication Date : 17/07/2015

(54) Title of the invention : NOVEL IMMUNOGLOBULIN-BINDING PROTEINS WITH IMPROVED SPECIFICITY

(51) International classification :C07K14/31
(31) Priority Document No :61/188,549
(32) Priority Date :11/08/2008
(33) Name of priority country :U.S.A.
(86) International Application No :NA
Filing Date :NA
(87) International Publication No : NA
(61) Patent of Addition to Application Number :NA
Filing Date :NA
(62) Divisional to Application Number :1661/DEL/2009
Filed on :10/08/2009

(71)**Name of Applicant :**
**1)MILLIPORE CORPORATION**
Address of Applicant :290 Concord Road, Billerica, MA 01821, United States of America
(72)**Name of Inventor :**
**1)SHARI SPECTOR**

(57) Abstract :
The present invention relates to modified immunoglobulin-binding proteins, e.g., Staphylococcus protein A, having improved binding specifcity for immunoglobulins and methods of making and using the same.

No. of Pages : 68 No. of Claims : 19

(12) PATENT APPLICATION PUBLICATION
(19) INDIA
(22) Date of filing of Application :18/12/2012
(21) Application No.3908/DEL/2012 A
(43) Publication Date : 17/07/2015

(54) Title of the invention : A PROCESS FOR THE PRODUCTION OF NANO METAL OXIDES

(51) International classification :C07C
(31) Priority Document No :NA
(32) Priority Date :NA
(33) Name of priority country :NA
(86) International Application No :NA
Filing Date :NA
(87) International Publication No : NA
(61) Patent of Addition to Application Number :NA
Filing Date :NA
(62) Divisional to Application Number :NA
Filing Date :NA

(71)**Name of Applicant :**
**1)DIRECTOR GENERAL, DEFENCE RESEARCH & DEVELOPMENT ORGANISATION**
Address of Applicant :MINISTRY OF DEFENCE, GOVT OF INDIA, DRDO BHAWAN, RAJAJI MARG, NEW DELHI 110066, INDIA
(72)**Name of Inventor :**
**1)PRASAD, GANGAVARAPU, KRISHNA;**
**2)RAMACHARYULU, PEESAPATI, VENKATA, RANGA, KODANDA**
**3)KUMAR, JELLA, PRAVEEN;**
**4)SRIVASTAVA, ANCHAL, ROY**
**5)SINGH, BEER**
**6)KAUSHIK, MAHABIR, PARSHAD**

(57) Abstract :
The invention relates to the field of nanoparticles of metal oxides and their use in the decontamination of Chemical Warfare Agents (CWA). The nano metal oxide(s) of the present invention have higher decontamination efficiency of CWA, which is due to the presence of high surface area, moisture content, hydroxyl groups, unusual chemical planes, Lewis acid/base sites and oxygen vacancies. The invention also provides a process for the production of nano metal oxides, which can be advantageously scaled to produce about 0.1 to lkglbatch of said nano metal oxides effective against CWA.

No. of Pages : 21 No. of Claims : 10

(12) PATENT APPLICATION PUBLICATION
(19) INDIA
(22) Date of filing of Application :10/11/2014
(21) Application No.9427/DELNP/2014 A
(43) Publication Date : 17/07/2015

(54) Title of the invention : RESIN COMPOSITION

(51) International classification :C08L67/04,C08K5/29,C08L67/00
(31) Priority Document No :2012147112
(32) Priority Date :29/06/2012
(33) Name of priority country :Japan
(86) International Application No :PCT/JP2013/067959
Filing Date :25/06/2013
(87) International Publication No :WO 2014/003191
(61) Patent of Addition to Application Number :NA
Filing Date :NA
(62) Divisional to Application Number :NA
Filing Date :NA

(71)**Name of Applicant :**
**1)TEIJIN LIMITED**
Address of Applicant :6- 7, Minamihommachi 1- chome, Chuo- ku, Osaka- shi, Osaka 5410054 Japan
(72)**Name of Inventor :**
**1)SHOJI Shinichiro**
**2)NONOKAWA Ryuji**

(57) Abstract :
A resin composition including a polylactic acid resin, a thermoplastic resin other than a polylactic acid, and a carbodiimide compound having a specific cyclic structure. Provided is a resin composition that exhibits improved compatibility between the polylactic acid resin and the thermoplastic resin other than a polylactic acid.

No. of Pages : 83 No. of Claims : 5

(12) PATENT APPLICATION PUBLICATION
(19) INDIA
(22) Date of filing of Application :10/11/2014
(21) Application No.9428/DELNP/2014 A
(43) Publication Date : 17/07/2015

(54) Title of the invention : N-SUBSTITUTED(6-HALOALKYLPYRIDIN-3-YL)ALKYL SULFOXIMINES AS A SEED TREATMENT TO CON TROL COLEOPTERAN INSECTS

(51) International classification :A01N43/40,A01P7/04
(31) Priority Document No :61/635082
(32) Priority Date :18/04/2012
(33) Name of priority country :U.S.A.
(86) International Application No :PCT/US2013/036409
Filing Date :12/04/2013
(87) International Publication No :WO 2013/158499
(61) Patent of Addition to Application Number :NA
Filing Date :NA
(62) Divisional to Application Number :NA
Filing Date :NA

(71)**Name of Applicant :**
**1)DOW ,AGROSCIENCES, LLC**
Address of Applicant :9330 Zionsville Rd., Indianapolis, Indiana 46268 U.S.A.
(72)**Name of Inventor :**
**1)HENDRIX, William, H,. III**
**2)TURNBULL, Gary**

(57) Abstract :
Methods of using iV-substituted(6-haloalkylpyridin-3-yl)alkyl sulfoximines, such as sulfoxaflor, as a seed treatment to control Coleopteran insects, such as flea beetles.

No. of Pages : 39 No. of Claims : 20

(12) PATENT APPLICATION PUBLICATION
(19) INDIA
(22) Date of filing of Application :10/11/2014
(21) Application No.9430/DELNP/2014 A
(43) Publication Date : 17/07/2015

(54) Title of the invention : SCISSORS GEAR DEVICE

(51) International classification :F16H55/18,F16H55/14
(31) Priority Document No :2012110072
(32) Priority Date :11/05/2012
(33) Name of priority country :Japan
(86) International Application No :PCT/JP2013/058927
Filing Date :27/03/2013
(87) International Publication No :WO 2013/168476
(61) Patent of Addition to Application Number :NA
Filing Date :NA
(62) Divisional to Application Number :NA
Filing Date :NA

(71)**Name of Applicant :**
**1)KABUSHIKI KAISHA F.C.C.**
Address of Applicant :7000 36NakagawaHosoe choKita kuHamamatsu shi Shizuoka 4311304 Japan
(72)**Name of Inventor :**
**1)HAYASHI Hiroyuki**
**2)SEGAMI Hideaki**

(57) Abstract :
Provided is a scissors gear device with which the overall size of the device can be reduced the range of application can be increased, and the assembly process can be simplified, by means of a simplified structure. This scissors gear device (100) is equipped with a main gear (101) and a sub, gear (104). The main gear (101) is equipped with three curved surface protrusions (102) that protrude in an arc in the circumferential direction at the periphery on one side surface of the main gear. The sub, gear (104) is equipped with three slanted surfaces (105) arranged in the circumferential direction at the periphery on the side surface which faces the main gear (101). Each slanted surface (105) is formed inclined in a planar shape toward the interior of the sub ,gear (104) at a prescribed angle in the circumferential direction and at a position corresponding to the curved surface protrusions (102) formed on the side surface of the main gear (101). The sub, gear (104) is pressed against the main gear (101) by a spring (107). Thus the sub, gear (104) rotates and is displaced in the circumferential direction with respect to the main gear (101) producing a phase difference.

No. of Pages : 30 No. of Claims : 4

(12) PATENT APPLICATION PUBLICATION
(19) INDIA
(22) Date of filing of Application :10/11/2014
(21) Application No.9410/DELNP/2014 A
(43) Publication Date : 17/07/2015

(54) Title of the invention : MATERNAL BIOMARKERS FOR GESTATIONAL DIABETES

(51) International classification :G01N33/68,G01N33/66,G01N33/563
(31) Priority Document No :
(32) Priority Date : -
(33) Name of priority country :Not Selected
(86) International Application No :PCT/US2013/030152
Filing Date :11/03/2013
(87) International Publication No :WO 2013/154709
(61) Patent of Addition to Application Number :NA
Filing Date :NA
(62) Divisional to Application Number :NA
Filing Date :NA

(71)**Name of Applicant :**
**1)DIABETOMICS, LLC**
Address of Applicant :20000 Nw Walker Road, Beaverton, OR 97006 U.S.A.
**2)NAGALLA, Srinivasa R.**
(72)**Name of Inventor :**
**1)NAGALLA, Srinivasa R.**

(57) Abstract :
Embodiments herein relate to the field of screening tools for fetal/maternal wellness, and more specifically to biomarkers for gestational diabetes. In various embodiments the methods may provide non- invasive and minimally- invasive screening tools for gestational diabetes that involve detection of changes in a proteomic profile of a test sample relative to a reference sample. In particular embodiments, the method may include determining whether a proteomic profile of a test sample from the subject includes at least one expression signature characteristic of gestational diabetes, wherein the proteomic profile comprises information on the expression of glycosylated fibronectin and glycosylated PSG, for example information on levels of fibronectin SNA or a fibronectin antibody complex and PSG -AAL or a PSG antibody complex. In some embodiments the proteomic profile may also include information on the expression of adiponectin sex hormone binding globulin (SHBG), C- reactive protein (CRP), a ratio of human chorionic gonadotropin (hCG) to placental lactogen, or a combination thereof.

No. of Pages : 44 No. of Claims : 24

(12) PATENT APPLICATION PUBLICATION
(21) Application No.9411/DELNP/2014 A
(19) INDIA
(22) Date of filing of Application :10/11/2014
(43) Publication Date : 17/07/2015

(54) Title of the invention : POWER ADAPTER FOR RF COAXIAL CABLE AND METHOD FOR INSTALLATION

(51) International classification :H01R31/06,H01R24/38
(31) Priority Document No :13/488761
(32) Priority Date :05/06/2012
(33) Name of priority country :U.S.A.
(86) International Application No :PCT/US2013/040029
Filing Date :08/05/2013
(87) International Publication No :WO 2013/184272
(61) Patent of Addition to Application Number :NA
Filing Date :NA
(62) Divisional to Application Number :NA
Filing Date :NA

(71)**Name of Applicant :**
**1)ANDREW LLC**
Address of Applicant :1100 CommScope Place, SE, Hickory, North Carolina 28602 U.S.A.
(72)**Name of Inventor :**
**1)BUENZ, Lawrence**

(57) Abstract :
An adapter for coupling a coaxial interface to a power conductor and method for interconnection may be provided as a body with a conductor junction dimensioned to couple with the power conductor and a mating surface dimensioned to couple with the coaxial interface. The conductor junction, an outer conductor contacting portion of the mating surface and an inner conductor contacting portion of the mating surface are electrically coupled together by the body.

No. of Pages : 19 No. of Claims : 20

(12) PATENT APPLICATION PUBLICATION
(19) INDIA
(22) Date of filing of Application :07/11/2014
(21) Application No.9399/DELNP/2014 A
(43) Publication Date : 17/07/2015

(54) Title of the invention : METHODS FOR BLADDER CANCER THERAPY USING BACULOVIRAL VECTORS

(51) International classification :A61K31/7088,A61K35/76,A61P35/00
(31) Priority Document No :61/622376
(32) Priority Date :10/04/2012
(33) Name of priority country :U.S.A.
(86) International Application No :PCT/SG2013/000142
Filing Date :10/04/2013
(87) International Publication No :WO 2013/154503
(61) Patent of Addition to Application Number :NA
Filing Date :NA
(62) Divisional to Application Number :NA
Filing Date :NA

(71)**Name of Applicant :**
**1)AGENCY FOR SCIENCE, TECHNOLOGY AND RESEARCH**
Address of Applicant :1 Fusionopolis Way, #20- 10 Connexis, Singapore 138632 Singapore
(72)**Name of Inventor :**
**1)WANG, Shu**
**2)WU, Chunxiao**
**3)ZHAO, Ying**
**4)LEE, Esthe,r Xingwei**

(57) Abstract :
There is presently provided methods and uses relating to delivering a nucleic acid molecule to a bladder cell using a baculoviral vector. The bladder cell is contacted with a baculoviral vector , which may further comprise a transgene.

No. of Pages : 45 No. of Claims : 21

(12) PATENT APPLICATION PUBLICATION
(19) INDIA
(22) Date of filing of Application :10/11/2014
(21) Application No.3249/DEL/2014 A
(43) Publication Date : 17/07/2015

(54) Title of the invention : SYSTEMS AND METHODS FOR REAL-TIME ACCOUNT ACCESS

(51) International classification :g06f
(31) Priority Document No :14/081,590
(32) Priority Date :15/11/2013
(33) Name of priority country :U.S.A.
(86) International Application No :NA
Filing Date :NA
(87) International Publication No : NA
(61) Patent of Addition to Application Number :NA
Filing Date :NA
(62) Divisional to Application Number :NA
Filing Date :NA

(71)**Name of Applicant :**
**1)PayNet Payments Network, LLC**
Address of Applicant :601 Riverside Avenue Jacksonville, FL 32204 United States of America
(72)**Name of Inventor :**
**1)Neil Marcous**
**2)Robert Woodbury**
**3)Peter Gordon**

(57) Abstract :
Systems, methods, and computer-readable media are provided for processing and settling financial transactions. An example method comprises receiving a transaction from an originator. The transaction comprises information associated with an identification of an initiating user or the account. The method comprises determining the actual account number, transmitting a financial services transaction request comprising the actual account number to a financial institution, receiving a response, and transmitting a response back to the originator. Another method comprises receiving, from a user device, a request to associate a financial account with a user account. The method comprises generating and sending an association message to a payment network and receiving a key associated with the financial account for use in initiating financial transactions. Another method comprises utilizing such a key to generate and process a transaction request. Other systems, methods, and media are also provided.

No. of Pages : 70 No. of Claims : 28

(12) PATENT APPLICATION PUBLICATION
(19) INDIA
(22) Date of filing of Application :12/11/2014
(21) Application No.9500/DELNP/2014 A
(43) Publication Date : 17/07/2015

(54) Title of the invention : INTERNAL COMBUSTION ENGINE

(51) International classification :F02B41/00,F02B75/32
(31) Priority Document No :NA
(32) Priority Date :NA
(33) Name of priority country :NA
(86) International Application No :PCT/RU2012/000285
Filing Date :13/04/2012
(87) International Publication No :WO 2013/154453
(61) Patent of Addition to Application Number :NA
Filing Date :NA
(62) Divisional to Application Number :NA
Filing Date :NA

(71)**Name of Applicant :**
**1)GALEEV, Irek, Abudarovich**
Address of Applicant :ul. Zacharenko 17 205, Chelyabinsk 454014, Russia
**2)GALEEV Damir Abudarovich**
(72)**Name of Inventor :**
**1)GALEEV ,Irek, Abudarovich**
**2)GALEEV Damir Abudarovich**

(57) Abstract :
The engine comprises a cylinder (1) with a piston (2) arranged therein said piston being connected to a connecting rod (3) , and a crankshaft (4). A first elliptical gearwheel (9) is rigidly fixed to the shaft (4) with the possibility of interacting with a second elliptical gearwheel (10) , which is rigidly fixed to an additional shaft (11). The distance from the pitch points (12) and (13) of the wheel (9) with the wheel (10) to the axis of rotation (14) of the wheel (9) in the case of positions of the crankshaft (4) corresponding to the location of the piston (2) in the upper and lower dead points is 1.1- 5 times the distance from the pitch points (12) and (13) to the axis of rotation (15) of the wheel (10). The distance from the pitch points of the wheel (9) with the wheel (10) to the axis of rotation (14) of the wheel (9) in the case of positions of the crankshaft corresponding to the location of the piston (2) in the centre of its excursion is 0.2- 0.9 times the distance from the pitch points to the axis of rotation (15) of the second wheel (10). The technical result consists in reducing the angular velocity of the crankshaft during movement of the piston in the region of the upper and lower dead points.

No. of Pages : 16 No. of Claims : 3

(12) PATENT APPLICATION PUBLICATION
(19) INDIA
(22) Date of filing of Application :12/11/2014
(21) Application No.9503/DELNP/2014 A
(43) Publication Date : 17/07/2015

(54) Title of the invention : CONTACT LENSES COMPRISING WATER SOLUBLE N (2 HYDROXYALKYL) (METH)ACRYLAMIDE POLYMERS OR COPOLYMERS

(51) International classification :C08F293/00,G02B1/04,C08J7/00
(31) Priority Document No :61/651767
(32) Priority Date :25/05/2012
(33) Name of priority country :U.S.A.
(86) International Application No :PCT/US2013/042644
Filing Date :24/05/2013
(87) International Publication No :WO 2013/177513
(61) Patent of Addition to Application Number :NA
Filing Date :NA
(62) Divisional to Application Number :NA
Filing Date :NA

(71)**Name of Applicant :**
**1)JOHNSON & JOHNSON VISION CARE, INC.**
Address of Applicant :7500 Centurion Parkway, Jacksonville, Florida 32256 U.S.A.
(72)**Name of Inventor :**
**1)SCALES, Charles, W.**
**2)MCCABE, Kevin P.**
**3)HEALY, Brent Matthew**

(57) Abstract :
The present invention relates to biomedical devices , and particularly contact lenses comprising a polymer having entangled therein at least one polymer comprising repeating units from N -(2- hydroxyalkyl) (meth)acrylamide.

No. of Pages : 57 No. of Claims : 56

(12) PATENT APPLICATION PUBLICATION
(19) INDIA
(22) Date of filing of Application :12/11/2014
(21) Application No.9505/DELNP/2014 A
(43) Publication Date : 17/07/2015

(54) Title of the invention : FLEXIBLE ELECTRICAL POWER CABLE

(51) International classification :H01B9/02,H01B7/04
(31) Priority Document No :13/561115
(32) Priority Date :30/07/2012
(33) Name of priority country :U.S.A.
(86) International Application No :PCT/US2013/040028
Filing Date :08/05/2013
(87) International Publication No :WO 2014/021969
(61) Patent of Addition to Application Number :NA
Filing Date :NA
(62) Divisional to Application Number :NA
Filing Date :NA

(71)**Name of Applicant :**
**1)ANDREW ,LLC**
Address of Applicant :1100 CommScope Place SE, Hickory North, Carolina 28602 U.S.A.
(72)**Name of Inventor :**
**1)HARWATH ,Frank**

(57) Abstract :
An electrical cable has a plurality of generally rectangular cross- section conductors superposed in a stack the stack surrounded by a polymer jacket. The stack may be provided with a lubrication layer provided between at least two of the conductors. Conductors of the stack may have a thickness that is greater proximate the middle of the stack than at the top and bottom of the stack and / or a width that is less at the top and the bottom than at the middle. Further stacks may also be provided parallel and coplanar with the first stack, also surrounded by the polymer jacket.

No. of Pages : 23 No. of Claims : 20

(12) PATENT APPLICATION PUBLICATION
(19) INDIA
(22) Date of filing of Application :12/11/2014
(21) Application No.9507/DELNP/2014 A
(43) Publication Date : 17/07/2015

(54) Title of the invention : CANNABIS PLANT ISOLATE COMPRISING /-TETRAHYDROCANNABINOL AND A METHOD FOR PREPAR - ING SUCH AN ISOLATE

| | |
|---|---|
| (51) International classification | :A61K31/35,A61K36/185,A61K31/352 |
| (31) Priority Document No | :12166661.4 |
| (32) Priority Date | :03/05/2012 |
| (33) Name of priority country | :EPO |
| (86) International Application No | :PCT/NL2013/050339 |
| Filing Date | :03/05/2013 |
| (87) International Publication No | :WO 2013/165251 |
| (61) Patent of Addition to Application Number | :NA |
| Filing Date | :NA |
| (62) Divisional to Application Number | :NA |
| Filing Date | :NA |

(71)**Name of Applicant :**
**1)ECHO PHARMACEUTICALS B.V.**
Address of Applicant :Rijnkade 16a, NL- 1382 GS Weesp Netherlands
(72)**Name of Inventor :**
**1)FERNANDEZ CID, Maria Vanesa**
**2)VAN HOUTEN, Dennis**

(57) Abstract :
The present invention relates to a method for preparing a Cannabis plant 9 - tetrahydrocannabinol isolate from a crude solvent extract of Cannabis plant material. The invention relates further to a Cannabis plant THC isolate comprising 9-tetrahydrocannabinol, Cannabinol (CBN) and/or Cannabidiol (CBD) and to a pharmaceutical composition comprising the Cannabis plant THC isolate.

No. of Pages : 19 No. of Claims : 15

(12) PATENT APPLICATION PUBLICATION
(19) INDIA
(22) Date of filing of Application :11/11/2014
(21) Application No.9456/DELNP/2014 A
(43) Publication Date : 17/07/2015

(54) Title of the invention : A FILTRATION CASSETTE AND A STACK OF FILTRATION CASSETTES

(51) International classification :B01D63/08,B01D25/30,C12M3/06
(31) Priority Document No :61/652873
(32) Priority Date :30/05/2012
(33) Name of priority country :U.S.A.
(86) International Application No :PCT/SE2013/050611
Filing Date :29/05/2013
(87) International Publication No :WO 2013/180632
(61) Patent of Addition to Application Number :NA
Filing Date :NA
(62) Divisional to Application Number :NA
Filing Date :NA

(71)**Name of Applicant :**
**1)GE HEALTHCARE BIO- SCIENCES AB**
Address of Applicant :Patent Department, Bjrkgatan 30, S-751 84 Uppsala Sweden
(72)**Name of Inventor :**
**1)LAMBALOT, Charles**
**2)LARSEN, William**

(57) Abstract :
The invention discloses a normal flow filtration cassette (1) stackable with like cassettes said cassette comprising: at least three port conduits (2, 3, 4); an inlet chamber (5) in fluid communication at least with a first of said port conduits (2); an outlet chamber (6) in fluid communication at least with a second of the port conduits (3); and a filter medium (7) between said inlet chamber and said outlet chamber , wherein said at least three port conduits (2, 3, 4) are each in fluid communication with a corresponding inlet port (8, 9, 10)and are each in fluid communication also with one of a corresponding set of outlet ports (11, 12, 13) and wherein each of said set of inlet ports (8, 9, 10) is arranged to cooperate with a respective complementary outlet port of an adjacent like cassette when in a stack and said outlet ports (11, 12, 13)are each arranged to cooperate with a respective complementary inlet port of a further adjacent like cassette when in a stack.

No. of Pages : 24 No. of Claims : 20

(12) PATENT APPLICATION PUBLICATION
(19) INDIA
(22) Date of filing of Application :11/11/2014
(21) Application No.9458/DELNP/2014 A
(43) Publication Date : 17/07/2015

(54) Title of the invention : TOOL FOR MANUFACTURING A FOUNDRY CORE FOR A TURBINE ENGINE BLADE AND PRODUCTION METHOD THEREOF

(51) International classification :B22C9/10,F01D5/20
(31) Priority Document No :1254350
(32) Priority Date :11/05/2012
(33) Name of priority country :France
(86) International Application No :PCT/FR2013/051028
Filing Date :07/05/2013
(87) International Publication No :WO 2013/167847
(61) Patent of Addition to Application Number :NA
Filing Date :NA
(62) Divisional to Application Number :NA
Filing Date :NA

(71)**Name of Applicant :**
**1)SNECMA**
Address of Applicant :2, boulevard du Gnral Martial Valin, F - 75015 Paris France
(72)**Name of Inventor :**
**1)TRUELLE, Franck, Edmond ,Maurice**
**2)BARIAUD, Christian**
**3)BOUTHEMY, Philippe**
**4)POURFILET, Patrick**
**5)VERGER ,Jean, Louis, Martial**
**6)GRANDIN, Alain**
**7)QUACH, Daniel**

(57) Abstract :
The invention relates to a tool for manufacturing a foundry core for producing a cooling circuit for a turbine engine blade, including a mould (40) for injecting a paste, which comprises cavities (42, 44) for a first portion and at least one other portion of the core, and means (50, 54) for supporting and/or fitting end portions of at least one ceramic rod which connects the above mentioned portions of the core and which passes through the cavity for the first portion of the core , characterized in that it includes in the cavity for the first portion of the core, a means (58) for supporting a medial portion of the rod.

No. of Pages : 25 No. of Claims : 19

(12) PATENT APPLICATION PUBLICATION
(19) INDIA
(22) Date of filing of Application :11/11/2014
(21) Application No.9459/DELNP/2014 A
(43) Publication Date : 17/07/2015

(54) Title of the invention : METHOD FOR PRODUCING A WELDED JOINT AND CREATING AN IMAGE OF THE WELDED JOINT BY MEANS OF COOLED X RAY TUBES

(51) International classification :B23K31/02,B23K31/12,G01N23/06
(31) Priority Document No :12171901.7
(32) Priority Date :14/06/2012
(33) Name of priority country :EPO
(86) International Application No :PCT/EP2013/061961
Filing Date :11/06/2013
(87) International Publication No :WO 2013/186189
(61) Patent of Addition to Application Number :NA
Filing Date :NA
(62) Divisional to Application Number :NA
Filing Date :NA

(71)**Name of Applicant :**
**1)SIEMENS AKTIENGESELLSCHAFT**
Address of Applicant :Wittelsbacherplatz 2, 80333 M¼nchen Germany
(72)**Name of Inventor :**
**1)BORGMANN, Christian**
**2)CLOSSEN- VON LANKEN SCHULZ, Michael**
**3)LOHMANN, Hans- Peter**
**4)NIEPOLD, Karsten**
**5)N–TZEL, Annett**
**6)STEPHAN, J¼rgen**

(57) Abstract :
The invention relates to a method for producing a welded joint (8) having the steps of: providing an x ray tube (3) arranged within an x ray housing (5) for generating x- ray radiation and a detector (4) arranged within a detector housing (6) for receiving the x ray radiation; flowing a cooling medium through the housing (5, 6); heating components (1 , 2) to be welded to the pre heating temperature required for producing the welded joint (8); welding the welded joint (8); creating an exposure of the welded joint (8) by means of the x ray tubes (3) and the detector (4) at a temperature of the components (1 , 2) which is essentially the pre -heating temperature or higher wherein the cooling medium flows through the housing (5, 6) such that the x ray tubes (3) and the detector (4) operate at the respective operating temperatures thereof.

No. of Pages : 15 No. of Claims : 8

(12) PATENT APPLICATION PUBLICATION
(21) Application No.9489/DELNP/2014 A
(19) INDIA
(22) Date of filing of Application :11/11/2014
(43) Publication Date : 17/07/2015

(54) Title of the invention : REFRIGERATION SYSTEM WITH PURGE USING ENRIVONMENTALLY SUITABLE CHILLER REFRIGERANT

(51) International classification :F25B43/04,F25B43/00
(31) Priority Document No :61/640222
(32) Priority Date :30/04/2012
(33) Name of priority country :U.S.A.
(86) International Application No :PCT/US2013/038639
Filing Date :29/04/2013
(87) International Publication No :WO 2013/165895
(61) Patent of Addition to Application Number :NA
Filing Date :NA
(62) Divisional to Application Number :NA
Filing Date :NA

(71)**Name of Applicant :**
**1)TRANE INTERNATIONAL INC.**
Address of Applicant :One Centennial Avenue, Piscataway, NJ 08855 U.S.A.
(72)**Name of Inventor :**
**1)KUJAK, Stephen, Anthony**
**2)MAJURIN, Julie, Ann**
**3)JANDAL, Daoud, Ali**
**4)ODRISCOLL, William**

(57) Abstract :
Refrigeration systems with a purge for removing non -condensables from an environmentally- suitable chiller refrigerant are provided. The refrigeration systems utilize an environmentally suitable chiller refrigerant with a 100 year direct global warming potential (GWP) of less than 150. The refrigeration systems further include a remover to remove refrigerant- harmful gases from the chiller refrigerant.

No. of Pages : 38 No. of Claims : 20

(12) PATENT APPLICATION PUBLICATION
(19) INDIA
(22) Date of filing of Application :11/11/2014
(21) Application No.9483/DELNP/2014 A
(43) Publication Date : 17/07/2015

(54) Title of the invention : TURBOCHARGER WITH ALUMINUM BEARING HOUSING

(51) International classification :F02B39/00,F02B39/14,F16C35/00
(31) Priority Document No :61/636778
(32) Priority Date :23/04/2012
(33) Name of priority country :U.S.A.
(86) International Application No :PCT/US2013/035732
Filing Date :09/04/2013
(87) International Publication No :WO 2013/162873
(61) Patent of Addition to Application Number :NA
Filing Date :NA
(62) Divisional to Application Number :NA
Filing Date :NA

(71)**Name of Applicant :**
**1)BORGWARNER INC.**
Address of Applicant :Patent Department, 3850 Hamlin Road, Auburn Hills, MI 48326 U.S.A.
(72)**Name of Inventor :**
**1)PALKO, John**
**2)NORTON, John**

(57) Abstract :
In an aluminum turbocharger bearing housing, there is a potential for wear of the bearing housing at the interface with the journal bearing system. With a protective hard anodized surface , the wear resistance and resistance to chemical attack of the bearing housing can be improved so that an aluminum bearing housing can have the life of a cast iron bearing housing at greatly reduced weight.

No. of Pages : 11 No. of Claims : 9

(12) PATENT APPLICATION PUBLICATION
(19) INDIA
(22) Date of filing of Application :12/11/2014
(21) Application No.9495/DELNP/2014 A
(43) Publication Date : 17/07/2015

(54) Title of the invention : WINDSCREEN WIPER DEVICE

(51) International classification :B60S1/40,B60S1/38
(31) Priority Document No :NA
(32) Priority Date :NA
(33) Name of priority country :NA
(86) International Application No :PCT/EP2012/058903
Filing Date :14/05/2012
(87) International Publication No :WO 2013/170877
(61) Patent of Addition to Application Number :NA
Filing Date :NA
(62) Divisional to Application Number :NA
Filing Date :NA

(71)**Name of Applicant :**
**1)FEDERAL MOGUL S.A.**
Address of Applicant :Avenue Champion, B- 6790 Aubange Belgium
(72)**Name of Inventor :**
**1)FRISCIONI, Thomas**

(57) Abstract :
A windscreen wiper device (1) comprising a wiper blade (2) which includes at least one groove (3) in which a longitudinal strip (4) is disposed which windscreen wiper device (1) comprises a connecting device (6) for an oscillating arm (7) wherein said connecting device (6) comprises at least two parts (8 9) provided with protrusion/hole means arranged for detachably connecting said parts (8 9) together through a snapping operation wherein the first part (8) is retained onto the wiper blade (2) and wherein the second part (9) comprises a channel arranged for inserting said oscillating arm (7) therein.

No. of Pages : 23 No. of Claims : 12

(12) PATENT APPLICATION PUBLICATION
(19) INDIA
(22) Date of filing of Application :12/11/2014
(21) Application No.9496/DELNP/2014 A
(43) Publication Date : 17/07/2015

(54) Title of the invention : ELECTRIC VEHICLE CHARGING SYSTEM AND CHARGING BILLING METHOD

(51) International classification :G06Q50/10,B60L3/00,B60L11/18
(31) Priority Document No :2012147352
(32) Priority Date :29/06/2012
(33) Name of priority country :Japan
(86) International Application No :PCT/JP2013/067622
Filing Date :27/06/2013
(87) International Publication No :WO 2014/003106
(61) Patent of Addition to Application Number :NA
Filing Date :NA
(62) Divisional to Application Number :NA
Filing Date :NA

(71)**Name of Applicant :**
**1)MITSUBISHI HEAVY INDUSTRIES, LTD.**
Address of Applicant :16 -5 Konan 2 -chome, Minato- ku Tokyo 1088215 Japan
(72)**Name of Inventor :**
**1)AMMA, Kenichi**
**2)ASADA, Shoichiro**

(57) Abstract :
An electric -vehicle charging system (10) is provided with a charger (12) installed in a predetermined position and a billing device (32). The charger (12) has: a reception unit (26) for receiving specification information used to specify an owner of the electric vehicle (16), the specification information being transmitted from the electric vehicle (16); and a power- transmission unit (28) for transmitting to the electric vehicle (16) that transmitted the specification information power to charge a secondary cell (18), the power-transmission unit (28) being supplied with power from a commercial power system (20). The billing device (32) bills the owner of the electric vehicle specified by the specification information according to the amount of power transmitted to the electric vehicle (16) by the charger (12). Consequently , the electric -vehicle charging system (10) can easily calculate how much to pay according to the power transmitted from the stationary charger to the electric vehicle.

No. of Pages : 40 No. of Claims : 6

(12) PATENT APPLICATION PUBLICATION
(19) INDIA
(22) Date of filing of Application :12/11/2014
(21) Application No.9497/DELNP/2014 A
(43) Publication Date : 17/07/2015

(54) Title of the invention : PRE SINTERED BLANK FOR DENTAL PURPOSES

(51) International classification :C03C10/00,A61C13/00,C04B35/16
(31) Priority Document No :12167759.5
(32) Priority Date :11/05/2012
(33) Name of priority country :EPO
(86) International Application No :PCT/EP2013/059699
Filing Date :10/05/2013
(87) International Publication No :WO 2013/167722
(61) Patent of Addition to Application Number :NA
Filing Date :NA
(62) Divisional to Application Number :NA
Filing Date :NA

(71)**Name of Applicant :**
**1)IVOCLAR, VIVADENT AG**
Address of Applicant :Bendererstr. 2, FL- 9494 Schaan Liechtenstein
(72)**Name of Inventor :**
**1)BRKE, Harald**
**2)RITZBERGER, Christian**
**3)SCHWEIGER, Marcel**
**4)RHEINBERGER, Volker**
**5)TAUCH, Diana**

(57) Abstract :
Disclosed are pre- sintered blanks on the basis of a lithium metasilicate glass- ceramic which are particularly suitable for the production of dental restorations.

No. of Pages : 30 No. of Claims : 16

(12) PATENT APPLICATION PUBLICATION
(19) INDIA
(22) Date of filing of Application :12/11/2014
(21) Application No.9498/DELNP/2014 A
(43) Publication Date : 17/07/2015

(54) Title of the invention : PRE SINTERED BLANK FOR DENTAL PURPOSES

(51) International classification :C03C3/083,C03C3/085,C03C3/095
(31) Priority Document No :12167760.3
(32) Priority Date :11/05/2012
(33) Name of priority country :EPO
(86) International Application No :PCT/EP2013/059700
Filing Date :10/05/2013
(87) International Publication No :WO 2013/167723
(61) Patent of Addition to Application Number :NA
Filing Date :NA
(62) Divisional to Application Number :NA
Filing Date :NA

(71)**Name of Applicant :**
**1)IVOCLAR, VIVADENT AG**
Address of Applicant :Bendererstr. 2, CH -9494 Schaan Liechtenstein
(72)**Name of Inventor :**
**1)BRKE, Harald**
**2)RITZBERGER, Christian**
**3)SCHWEIGER, Marcel**
**4)RHEINBERGER, Volker**

(57) Abstract :
Disclosed are pre- sintered blanks on the basis of a lithium disilicate glass- ceramic which are particularly suitable for the production of dental restorations.

No. of Pages : 25 No. of Claims : 16

(12) PATENT APPLICATION PUBLICATION
(19) INDIA
(22) Date of filing of Application :12/11/2014
(21) Application No.9499/DELNP/2014 A
(43) Publication Date : 17/07/2015

(54) Title of the invention : SYSTEMS AND METHODS FOR ENHANCED AWARENESS OF OBSTACLE PROXIMITY DURING TAXI OPERATIONS

(51) International classification :G08G5/04,G08G5/00
(31) Priority Document No :61/653297
(32) Priority Date :30/05/2012
(33) Name of priority country :U.S.A.
(86) International Application No :PCT/US2013/043287
Filing Date :30/05/2013
(87) International Publication No :WO 2013/181351
(61) Patent of Addition to Application Number :NA
Filing Date :NA
(62) Divisional to Application Number :NA
Filing Date :NA

(71)**Name of Applicant :**
**1)HONEYWELL, INTERNATIONAL INC.**
Address of Applicant :Patent Services M/S AB/2B, 101 Columbia Road, P. O. Box 2245, Morristown, New Jersey 07962-2245 U.S.A.
(72)**Name of Inventor :**
**1)KHATWA, Ratan**
**2)MANNON, Pamela**

(57) Abstract :
Systems and methods for predicting and displaying targets based on height in relation to the wing wingtip or other elements of the aircraft, such as engine nacelles. The location of ground obstacles is based on radar returns (from sensors deployed on the ownship), aircraft surveillance data, and/or an airport moving map database.

No. of Pages : 23 No. of Claims : 20

(12) PATENT APPLICATION PUBLICATION
(21) Application No.9537/DELNP/2014 A
(19) INDIA
(22) Date of filing of Application :13/11/2014
(43) Publication Date : 17/07/2015

(54) Title of the invention : IMPROVED CONTROL CHANNEL IN A HIGH SPEED PACKET ACCESS SYSTEM

(51) International classification :H04B7/06
(31) Priority Document No :61/644515
(32) Priority Date :09/05/2012
(33) Name of priority country :U.S.A.
(86) International Application No :PCT/SE2012/051328
Filing Date :29/11/2012
(87) International Publication No :WO 2013/169163
(61) Patent of Addition to Application Number :NA
Filing Date :NA
(62) Divisional to Application Number :NA
Filing Date :NA

(71)**Name of Applicant :**
**1)TELEFONAKTIEBOLAGET L M ERICSSON (PUBL)**
Address of Applicant :S -164 83 Stockholm Sweden
(72)**Name of Inventor :**
**1)NAMMI ,Sairamesh**

(57) Abstract :
The proposed technology relates to a method for conveying information from a node to user equipment UE, in a HSPA , system. The method comprises the step of obtaining (S1) rank information and modulation information related to a four- branch Multiple Input Multiple Output, MIMO , system. The method also comprises the step of combining (S2) the rank information and the modulation information related to the four- branch MIMO system into a bit pattern, and the step of transmitting (S3) the combined rank information and modulation information related to the four branch MIMO system as said bit pattern in a control channel to the UE. In this way , a power- efficient solution for conveying information related to a four- branch MIMO system in a control channel from a node to a UE in a HSPA system is provided.

No. of Pages : 69 No. of Claims : 26

(12) PATENT APPLICATION PUBLICATION
(21) Application No.9518/DELNP/2014 A
(19) INDIA
(22) Date of filing of Application :12/11/2014
(43) Publication Date : 17/07/2015

(54) Title of the invention : METHOD AND APPARATUS FOR PROVIDING A SUPPORT FOR THE TRANSFER OF AN UNIVOCAL DESIGN AND SUPPORT THEREBY OBTAINED

(51) International classification :B41M5/165,B41M5/382,B05C5/00
(31) Priority Document No :BI2012A000006
(32) Priority Date :18/05/2012
(33) Name of priority country :Italy
(86) International Application No :PCT/IT2012/000296
Filing Date :26/09/2012
(87) International Publication No :WO 2013/171776
(61) Patent of Addition to Application Number :NA
Filing Date :NA
(62) Divisional to Application Number :NA
Filing Date :NA

(71)**Name of Applicant :**
**1)SELVA ,Claudio**
Address of Applicant :Via Cascina lOttaviana 18, 1-13900 Biella Pavignano (BI) Italy
(72)**Name of Inventor :**
**1)SELVA, Claudio**

(57) Abstract :
A method for making a medium for transferring a univocal pattern comprising the steps of preparing a transfer medium (1) provided with a transfer surface (2) preparing an amount of encapsulated micro drops (3) of color applying a layer of adhesive material (4) or other material or technique adapted to stably withhold said micro droplets at least on said transfer surface randomly distributing an amount of encapsulated micro drops of color at least on said surface. Apparatus for implementing the method and medium thereby obtained.

No. of Pages : 20 No. of Claims : 39

(12) PATENT APPLICATION PUBLICATION
(21) Application No.9521/DELNP/2014 A
(19) INDIA
(22) Date of filing of Application :12/11/2014
(43) Publication Date : 17/07/2015

(54) Title of the invention : BIOMASS GASIFIER DEVICE

(51) International classification :C10J3/12,B09B3/00,C10J3/00
(31) Priority Document No :2012114116
(32) Priority Date :18/05/2012
(33) Name of priority country :Japan
(86) International Application No :PCT/JP2013/063288
Filing Date :13/05/2013
(87) International Publication No :WO 2013/172301
(61) Patent of Addition to Application Number :NA
Filing Date :NA
(62) Divisional to Application Number :NA
Filing Date :NA

(71)**Name of Applicant :**
**1)JAPAN BLUE ENERGY CO., LTD.**
Address of Applicant :3 -20 Kioi- cho, Chiyoda- ku, Tokyo 1020094 Japan
(72)**Name of Inventor :**
**1)DOWAKI Naoki**
**2)DOWAKI Kiyoshi**
**3)TAKEDA Yasuie**
**4)IKEDA Hiroshi**
**5)SUDA Kousuke**
**6)KAGAYA Fumie**
**7)KAMIUCHI Hisashi**
**8)KAMEYAMA Mitsuo**

(57) Abstract :
The present invention provides a device which makes it possible not only to significantly decrease the hassle caused by tar and the like generated by pyrolyzing biomass and to maximize the rate of gasification of the tar generated , but also to produce hydrogen-containing gas from biomass at high thermal efficiency and low cost. A gasifier device , provided with: a biomass pyrolysis zone for heating biomass in a non- oxidizing gas atmosphere; and a gas reforming zone for heating , in the presence of steam pyrolyzed gas thus generated; a plurality of heated granules and/or lumps being moved from the gas reforming zone to the biomass pyrolysis zone to reform pyrolyzed biomass gas and to pyrolyze biomass using the heat possessed by the plurality of granules and/or lumps. The gasifier device is characterized in that the biomass pyrolysis zone and the gas reforming zone are provided in a single vessel, and at least one partitioning plate is provided between the biomass pyrolysis zone and the gas reforming zone.

No. of Pages : 60 No. of Claims : 11

(12) PATENT APPLICATION PUBLICATION
(19) INDIA
(22) Date of filing of Application :12/11/2014
(21) Application No.9522/DELNP/2014 A
(43) Publication Date : 17/07/2015

(54) Title of the invention : USE OF N ACETYL- 5- METHOXYTRYPTAMINE OR ANALOGUES THEREOF, FOR PROMOTING THE MECHANISM OF IMPLANTATION OF THE EMBRYO AND RELATED COMPOSITIONS AND CULTURE MEDIA

(51) International classification :A61K31/165,A61K31/4045,C12N5/00
(31) Priority Document No:MI2012A000913
(32) Priority Date :28/05/2012
(33) Name of priority country :Italy
(86) International Application No :PCT/EP2013/060872
Filing Date :27/05/2013
(87) International Publication No :WO 2013/178587
(61) Patent of Addition to Application Number :NA
Filing Date :NA
(62) Divisional to Application Number :NA
Filing Date :NA

(71)**Name of Applicant :**
**1)MAXIA, Nicoletta**
Address of Applicant :Via Dell'Orsa Maggiore, 4, Torre Delle Stelle, I-09040 Maracalagonis (CA) (IT) Switzerland
(72)**Name of Inventor :**
**1)MAXIA ,Nicoletta**

(57) Abstract :
The present invention refers to the use of N -acetyl- 5- methoxytryptamine (melatonin) and/or an analogue thereof, for use in the medical or veterinary field in the assisted reproduction for promoting the mechanism of implantation of the embryo , and in particular for the prevention of implantation failure into the uterus, by topical administration of an effective amount in a mammalian subject female in need of such treatment , and related compositions, culture media and medical devices.

No. of Pages : 48 No. of Claims : 25

(12) PATENT APPLICATION PUBLICATION
(19) INDIA
(22) Date of filing of Application :12/11/2014
(21) Application No.9524/DELNP/2014 A
(43) Publication Date : 17/07/2015

(54) Title of the invention : EFFICIENT CONTROL PACKET REPLICATION IN DATA PLANE

(51) International classification :H04L12/761,H04L12/773
(31) Priority Document No :13/453752
(32) Priority Date :23/04/2012
(33) Name of priority country :U.S.A.
(86) International Application No :PCT/IB2013/052861
Filing Date :10/04/2013
(87) International Publication No :WO 2013/160785
(61) Patent of Addition to Application Number :NA
Filing Date :NA
(62) Divisional to Application Number :NA
Filing Date :NA

(71)**Name of Applicant :**
**1)TELEFONAKTIEBOLAGET L M ERICSSON (PUBL)**
Address of Applicant :S -164 83 Stockholm Sweden
(72)**Name of Inventor :**
**1)GULATI, Alok**
**2)SHAH ,Kunal**

(57) Abstract :
A method for replicating a control packet in a forwarding plane of a network element the control packet being destined for a plurality of subscriber end stations. The forwarding plane receives the control packet from a control plane and detects a replication indicator associated with the control packet. The forwarding plane determines the plurality of subscriber end stations as each of the plurality of subscriber end stations is associated with the control packet. The forwarding plane then replicates the control packet for each of the plurality of subscriber end stations and distributes the replicated control packets to the plurality of subscriber end stations.

No. of Pages : 26 No. of Claims : 17

(12) PATENT APPLICATION PUBLICATION
(21) Application No.9546/DELNP/2014 A
(19) INDIA
(22) Date of filing of Application :13/11/2014
(43) Publication Date : 17/07/2015

(54) Title of the invention : COMPOSITIONS AND METHODS FOR TREATMENT OF THE SIDE EFFECTS ASSOCIATED WITH ADMINISTRATION OF CANCER CHEMOTHERAPEUTIC AGENTS

| | |
|---|---|
| (51) International classification | :A61K31/70,A61K31/415,A61K31/52 |
| (31) Priority Document No | :13/446328 |
| (32) Priority Date | :13/04/2012 |
| (33) Name of priority country | :U.S.A. |
| (86) International Application No | :PCT/US2013/036326 |
| Filing Date | :12/04/2013 |
| (87) International Publication No | :WO 2013/155385 |
| (61) Patent of Addition to Application Number | :NA |
| Filing Date | :NA |
| (62) Divisional to Application Number | :NA |
| Filing Date | :NA |

(71)**Name of Applicant :**
**1)ASYMMETRIC, THERAPEUTICS LLC**
Address of Applicant :141 Main Street, P.O. Box J, Unadilla, New York 13849 U.S.A.
(72)**Name of Inventor :**
**1)FORD, John P.**

(57) Abstract :
A composition and method for the treatment of the side- effects associated with the administration of cancer chemotherapeutic agents involves the oral ingestion of a slow release capsule containing adenine and orotate. The administration of a protein pump inhibitor decreases systemic absorption of orotate and the administration of allopurinol decreases the formation of 2, 8- dihydroxy adenine from adenine. In an alternative embodiment , cationic liposomes contain purine/pyrimidine precursors. The cationic liposomes bind to the cells lining the mucosa of the intestinal tract and then the contents of the cationic liposome are then taken up in the interior of the cells to prevent the metabolism of the cancer treatment drug 5- FU into a toxic species.

No. of Pages : 25 No. of Claims : 31

(12) PATENT APPLICATION PUBLICATION
(21) Application No.9547/DELNP/2014 A
(19) INDIA
(22) Date of filing of Application :13/11/2014
(43) Publication Date : 17/07/2015

(54) Title of the invention : AUSTENITIC HEAT RESISTANT CAST STEEL HAVING EXCELLENT MACHINABILITY AND PART FOR EXHAUST SYSTEM WHICH COMPRISES SAME

(51) International classification :C22C38/00,C22C38/60,F01N13/16
(31) Priority Document No :2012108192
(32) Priority Date :10/05/2012
(33) Name of priority country :Japan
(86) International Application No :PCT/JP2013/063045
Filing Date :09/05/2013
(87) International Publication No :WO 2013/168770
(61) Patent of Addition to Application Number :NA
Filing Date :NA
(62) Divisional to Application Number :NA
Filing Date :NA

(71)**Name of Applicant :**
**1)HITACHI METALS LTD.**
Address of Applicant :2- 1 Shibaura 1- chome, Minato- ku, Tokyo 1058614 Japan
(72)**Name of Inventor :**
**1)MORISHITA ,Kana**
**2)INOUE Kenichi**
**3)KATSURAGI Susumu**
**4)KAWABATA Masahide**
**5)SAKUTA Tomonori**

(57) Abstract :
An austenitic heat resistant cast steel having excellent machinability which comprises in mass % 0.4 to 0.55% of C 1 to 2% of Si 0.5 to 1.5% of Mn 18 to 27% of Cr 8 to 22% of Ni 1.5 to 2.5% of Nb 0.01 to 0.3% of N 0.1 to 0.2% of S 0.02 to 0.15% of Al and a remainder made up by Fe and unavoidable impurities wherein the machinability index (I value) of the cast steel which is represented by the formula I = 100—S+75—Al+0.75—Mn 10—C 2—Nb 0.25—Cr 0.15—Ni 1.2—N (wherein each atomic symbol represents the mass% of the corresponding element in the cast steel) fulfills the requirement represented by the formula 3.0 = I value = +14.0; and a part for an exhaust system which comprises the cast steel.

No. of Pages : 36 No. of Claims : 5

(12) PATENT APPLICATION PUBLICATION
(19) INDIA
(22) Date of filing of Application :13/11/2014
(21) Application No.9548/DELNP/2014 A
(43) Publication Date : 17/07/2015

(54) Title of the invention : LOW APPLICATION TEMPERATURE POWDER COATING

(51) International classification :C09D5/03,C09D163/00,C09D7/12
(31) Priority Document No :61/659176
(32) Priority Date :13/06/2012
(33) Name of priority country :U.S.A.
(86) International Application No :PCT/US2013/030994
Filing Date :13/03/2013
(87) International Publication No :WO 2013/187962
(61) Patent of Addition to Application Number :NA
Filing Date :NA
(62) Divisional to Application Number :NA
Filing Date :NA

(71)**Name of Applicant :**
**1)VALSPAR, SOURCING INC.**
Address of Applicant :P.O. Box 1461, 901 3rd Avenue S., Minneapolis, Minnesota 55440 U.S.A.
(72)**Name of Inventor :**
**1)ZHANG, Sandy**
**2)WILSON ,Xu**

(57) Abstract :
Powder coating compositions that include an epoxy resin composition and a curing agent are described. The powder coating compositions can be applied at low application temperatures of about 165°C to 185°C. The coating compositions can be used to form fusion- bonded single layer and dual- layer epoxy pipe coatings and demonstrate optimal corrosion resistance and flexibility with reduced cathodic disbondment.

No. of Pages : 17 No. of Claims : 15

(12) PATENT APPLICATION PUBLICATION
(19) INDIA
(22) Date of filing of Application :13/11/2014
(21) Application No.9550/DELNP/2014 A
(43) Publication Date : 17/07/2015

(54) Title of the invention : PROCESS FOR PRODUCING VOLATILE ORGANIC COMPOUNDS FROM BIOMASS MATERIAL

(51) International classification :C12P7/06,C12P7/10,B01D1/14
(31) Priority Document No :61/648109
(32) Priority Date :17/05/2012
(33) Name of priority country :U.S.A.
(86) International Application No :PCT/US2013/041313
Filing Date :16/05/2013
(87) International Publication No :WO 2013/173563
(61) Patent of Addition to Application Number :NA
Filing Date :NA
(62) Divisional to Application Number :NA
Filing Date :NA

(71)**Name of Applicant :**
**1)SHELL, INTERNATIONALE RESEARCH MAATSCHAPPIJ B.V.**
Address of Applicant :Carel Van Bylandtlaan 30, NL- 2596 The Hague Netherlands
(72)**Name of Inventor :**
**1)HAMILTON, Phillip Guy**
**2)RADTKE, Corey William**
**3)KREITMAN, Keith Michael**

(57) Abstract :
Embodiments of the present invention provide for efficient and economical production and recovery of ethanol or other volatile organic compounds, such as acetic acid, from solid biomass material, particularly on a larger scale, such as on the commercialization or industrial scale. According to one aspect of the invention , the method comprises (a) generating at least about 10 tons of prepared biomass material by adding a microbe, optionally an acid , and optionally an enzyme to a solid biomass; (b) storing the prepared biomass material for at least about 24 hours in a storage facility to allow production of at least one volatile organic compound from at least a portion of the sugar in the solid biomass; and (c) capturing the at least one volatile organic compound by using a solventless recovery system.

No. of Pages : 50 No. of Claims : 16

(12) PATENT APPLICATION PUBLICATION
(21) Application No.9514/DELNP/2014 A
(19) INDIA
(22) Date of filing of Application :12/11/2014
(43) Publication Date : 17/07/2015

(54) Title of the invention : OXIDIZED REGENERATED CELLULOSE HEMOSTATIC POWDERS AND METHODS OF MAKING

(51) International classification :A61L26/00
(31) Priority Document No :13/480842
(32) Priority Date :25/05/2012
(33) Name of priority country :U.S.A.
(86) International Application No :PCT/US2013/042149
Filing Date :22/05/2013
(87) International Publication No :WO 2013/177242
(61) Patent of Addition to Application Number :NA
Filing Date :NA
(62) Divisional to Application Number :NA
Filing Date :NA

(71)**Name of Applicant :**
**1)ETHICON, INC.**
Address of Applicant :P.O. Box 151, U.S. Route 22, Somerville, New Jersey 08876 U.S.A.
(72)**Name of Inventor :**
**1)WANG ,Yi- Lan**
**2)ZHANG, Guanghui**

(57) Abstract :
The present invention is directed to hemostatic material containing compacted ORC powder comprising particles having an average aspect ratio from about 1 to about 18, wherein said compacted ORC powder have preferably been processed in a compaction device, such as a ball milled ORC powder. The present invention further relates to methods of making the hemostatic material and a method of treating a wound by applying the hemostatic powder onto and/or into the wound of a patient.

No. of Pages : 31 No. of Claims : 16

(12) PATENT APPLICATION PUBLICATION
(19) INDIA
(22) Date of filing of Application :12/11/2014
(21) Application No.9515/DELNP/2014 A
(43) Publication Date : 17/07/2015

(54) Title of the invention : ADJUSTABLE VEHICLE SEAT

(51) International classification :B60N2/015,B60N2/20,B60N2/22
(31) Priority Document No :10 2012 015 287.6
(32) Priority Date :31/07/2012
(33) Name of priority country :Germany
(86) International Application No :PCT/EP2013/065722
Filing Date :25/07/2013
(87) International Publication No :WO 2014/019931
(61) Patent of Addition to Application Number :NA
Filing Date :NA
(62) Divisional to Application Number :NA
Filing Date :NA

(71)**Name of Applicant :**
**1)JOHNSON CONTROLS GMBH**
Address of Applicant :Industriestrasse 20- 30, 51399 Burscheid Germany
(72)**Name of Inventor :**
**1)ROTHSTEIN, Gerhard**
**2)FAHL, Michael**

(57) Abstract :
The invention relates to an adjustable vehicle seat (1), comprising a seat part (2) and a backrest (3) which is pivotable relative to the seat part (2) about a backrest pivot axis (6) by means of at least one backrest adjustment fitting (5) and is lockable in a plurality of angular positions and at least one locking device (90) by means of which the seat part (2) is lockable to a vehicle structure. An unlocking lever (30) is provided here, said unlocking lever transmitting a movement introduced for unlocking purposes to the at least one locking device (90), wherein a first interlock element (54) is provided , said interlock element ,when the backrest adjustment fitting (5) is unlocked ,preventing a movement of the unlocking lever (30) for unlocking the locking device (90) and which when the locking device (90) is unlocked , preventing an unlocking of the backrest adjustment fitting (5) , wherein the first interlock element (54) is designed as a blocking lever (54) which is connected to a transmission rod (60) for rotation therewith wherein, when the transmission rod (60) rotates , the backrest adjustment fitting (5) is unlocked and wherein the unlocking lever (30) has a blocking element (36 , 37) or interacts with a blocking element (36 , 37) which when the locking device (90) is unlocked prevents a movement of the blocking lever (54) for unlocking the backrest adjustment fitting (5).

No. of Pages : 39 No. of Claims : 15

(12) PATENT APPLICATION PUBLICATION
(19) INDIA
(22) Date of filing of Application :12/11/2014
(21) Application No.9516/DELNP/2014 A
(43) Publication Date : 17/07/2015

(54) Title of the invention : PRIMARY OPTICAL FIBER COATING COMPOSITION CONTAINING NON RADIATION CURABLE COMPONENT

| | |
|---|---|
| (51) International classification | :C09D4/00,C08G18/75,C08G18/10 |
| (31) Priority Document No | :61/644061 |
| (32) Priority Date | :08/05/2012 |
| (33) Name of priority country | :U.S.A. |
| (86) International Application No | :PCT/US2013/040049 |
| Filing Date | :08/05/2013 |
| (87) International Publication No | :WO 2013/169840 |
| (61) Patent of Addition to Application Number | :NA |
| Filing Date | :NA |
| (62) Divisional to Application Number | :NA |
| Filing Date | :NA |

(71)**Name of Applicant :**
**1)CORNING INCORPORATED**
Address of Applicant :1 Riverfront Plaza, Corning ,New York 14831 U.S.A.
(72)**Name of Inventor :**
**1)BOOKBINDER ,Dana, Craig**
**2)DEROSA, Michael, Edward**
**3)MCCARTHY ,Kevin ,Robert**
**4)NIU ,Weijun**
**5)SCHISSE,L David, Neal**

(57) Abstract :
A radiation curable composition is disclosed that includes a curable cross linker essentially free of urethane and urea functional groups a curable diluent and a non radiation curable component comprising (thio)urethane and/or urea groups. Coated optical fibers having a primary coating formed from this radiation curable composition as well as optical fiber ribbons that contain the coated optical fibers are disclosed. Methods of making the optical fibers and ribbons are also disclosed.

No. of Pages : 48 No. of Claims : 32

(12) PATENT APPLICATION PUBLICATION
(19) INDIA
(22) Date of filing of Application :13/11/2014
(21) Application No.9557/DELNP/2014 A
(43) Publication Date : 17/07/2015

(54) Title of the invention : AERODYNAMIC DRAG REDUCING APPARATUS

(51) International classification :B62D35/00
(31) Priority Document No :1206754.2
(32) Priority Date :17/04/2012
(33) Name of priority country :U.K.
(86) International Application No :PCT/GB2013/050909
Filing Date :09/04/2013
(87) International Publication No :WO 2013/156755
(61) Patent of Addition to Application Number :NA
Filing Date :NA
(62) Divisional to Application Number :NA
Filing Date :NA

(71)**Name of Applicant :**
**1)MAVEN, INNOVATIVE TECHNOLOGIES LTD**
Address of Applicant :135 Campion Road, Hatfield, Hertfordshire, AL10 9FL U.K.
(72)**Name of Inventor :**
**1)RAO, Vasu**
**2)SINHA, Rakesh**

(57) Abstract :
A substantially flat fronted vehicle (10) such as a truck is provided with adjustable air deflector blades (24A- 24D). The air deflector blades (24A- 24D) provide upper (24A 24C) and lower (24B 24D) air deflector blades vertically mounted above one another and providing a gap (32) around the windscreen (8). The air deflector blades (24A -24D) are arcuate sheets in form and each supported by support arms (26) comprising vertically hinged first (38) and second (40) connected spring loaded arms that are urged to spring open but are held a selected angle and distance from the vehicle (10) front face (22) by wire rope length selection means and are thusly adjusted to promote least aerodynamic drag. Use on rail vehicles is also included. The apparatus has the unexpected effect of actually reducing forward vehicle aerodynamic drag in the presence of crosswinds.

No. of Pages : 20 No. of Claims : 20

(12) PATENT APPLICATION PUBLICATION
(19) INDIA
(22) Date of filing of Application :13/11/2014
(21) Application No.9558/DELNP/2014 A
(43) Publication Date : 17/07/2015

(54) Title of the invention : EXTRACT OF GREYIA RADLKOFERI AND USE THEREOF

(51) International classification :A61K36/18
(31) Priority Document No :2012/03648
(32) Priority Date :18/05/2012
(33) Name of priority country :South Africa
(86) International Application No :PCT/IB2013/054054
Filing Date :17/05/2013
(87) International Publication No :WO 2013/171720
(61) Patent of Addition to Application Number :NA
Filing Date :NA
(62) Divisional to Application Number :NA
Filing Date :NA

(71)**Name of Applicant :**
**1)UNIVERSITY OF PRETORIA**
Address of Applicant :Cnr. Lynnwood & University Roads, Hatfield, 0002 Pretoria South Africa
**2)UNIVERSITY OF KWAZULU NATAL**
(72)**Name of Inventor :**
**1)DE CANHA, Marco, Nuno**
**2)LALL, Namrita**
**3)HUSSEIN, Ahmed**
**4)MOGAPI, Elizabeth**
**5)MOODLEY, Indres**

(57) Abstract :
This invention relates to the isolation, and use of a plant extract in the treatment of skin hyper-pigmentation. More particularly, this invention relates to the isolation of a tyrosinase inhibitor in an extract of plant matehal from the Greyia radlkoferi (G. radlkoferi) plant, the extract including 5,7-dihidroxyflavone[(2S)-pinocembrin]; 2, 6-dihydroxy-4-methoxydihydrochalcone; 2,4,6-trihydroxyhydrochalcone; 3,5,7-trihydroxyflavone and 4,57-thhydroxyisoflavone.

No. of Pages : 17 No. of Claims : 14

(12) PATENT APPLICATION PUBLICATION
(21) Application No.9559/DELNP/2014 A
(19) INDIA
(22) Date of filing of Application :13/11/2014
(43) Publication Date : 17/07/2015

(54) Title of the invention : PRESSURE RESISTANT HOSE

(51) International classification :F16L11/08,F16L11/02
(31) Priority Document No :1020120053352
(32) Priority Date :19/05/2012
(33) Name of priority country :Republic of Korea
(86) International Application No :PCT/KR2013/003901
Filing Date :06/05/2013
(87) International Publication No :WO 2013/176420
(61) Patent of Addition to Application Number :NA
Filing Date :NA
(62) Divisional to Application Number :NA
Filing Date :NA

(71)**Name of Applicant :**
**1)CHUNG, In- Sun**
Address of Applicant :203 101 (Deokso DooSan Weve Apt.) 180 Deokso ro Wabu eup Namyangju si Gyeonggi do 472 962 Republic of Korea
(72)**Name of Inventor :**
**1)CHUNG, In- Sun**

(57) Abstract :
The present invention provides a pressure- resistant hose , comprising: a tubular inner casing; a mixed woven- fabric layer including a yarn in a first direction, which is helically and continuously wound on the outer periphery of the inner casing and a yarn in a second direction , which is continuously wound on the outer periphery of the inner casing such that the yarn in the second direction overlaps the yarn in the first direction; and a tubular outer casing arranged on the outer periphery of the inner casing so as to cover the mixed woven- fabric layer. The yarn in the first direction and the yarn in the second direction consist of filament yarns, and are made of twisted threads having ten strands or less formed by means of at least two twists. The inner casing and the outer casing are coupled together via air gaps in the mixed woven- fabric layer formed by the mixed weaving of the yarn in the first direction and the yarn in the second direction.

No. of Pages : 26 No. of Claims : 9

(12) PATENT APPLICATION PUBLICATION
(19) INDIA
(22) Date of filing of Application :13/11/2014
(21) Application No.9540/DELNP/2014 A
(43) Publication Date : 17/07/2015

(54) Title of the invention : RAPID HYDRAULIC BINDER COMPRISING A CALCIUM SALT

(51) International classification :C04B28/04,C04B28/14
(31) Priority Document No :1254628
(32) Priority Date :22/05/2012
(33) Name of priority country :France
(86) International Application No :PCT/EP2013/060357
Filing Date :21/05/2013
(87) International Publication No :WO 2013/174784
(61) Patent of Addition to Application Number :NA
Filing Date :NA
(62) Divisional to Application Number :NA
Filing Date :NA

(71)**Name of Applicant :**
**1)LAFARGE**
Address of Applicant :61 rue des Belles Feuilles, F- 75116 Paris France
(72)**Name of Inventor :**
**1)SABIO, Serge**
**2)GHILARDI, Serge**
**3)PARDAL, Xiaolin**
**4)TESTUD, Michel**

(57) Abstract :
The present invention relates to ahydraulic binder comprising a Portland clinker having a Blaine specific surface of 4000 to 5500 $cm^2/g$, from 2.5 to 8 % of sulphate expressed by mass of SO relative to the mass of clinker, from 1.5 to 10 % of calcium nitrite and/or calcium nitrate expressed as anhydrous mass relative to the mass of clinker and from 15 to 50 % of a mineral addition comprising calcium carbonate by mass relative to the total mass of binder.

No. of Pages : 15 No. of Claims : 9

(12) PATENT APPLICATION PUBLICATION
(19) INDIA
(22) Date of filing of Application :13/11/2014
(21) Application No.9543/DELNP/2014 A
(43) Publication Date : 17/07/2015

(54) Title of the invention : LASER SINTERED DENTAL RESTORATION AND METHOD OF MANUFACTURE

(51) International classification :A61C13/00,C25F3/00,C25F3/22
(31) Priority Document No :12167541.7
(32) Priority Date :10/05/2012
(33) Name of priority country :EPO
(86) International Application No :PCT/GB2013/051212
Filing Date :10/05/2013
(87) International Publication No:WO 2013/167905
(61) Patent of Addition to Application Number :NA
Filing Date :NA
(62) Divisional to Application Number :NA
Filing Date :NA

(71)**Name of Applicant :**
**1)RENISHAW PLC**
Address of Applicant :New Mills ,Gloucestershire, Wotton - under- Edge, Gloucestershire GL12 8JR U.K.
(72)**Name of Inventor :**
**1)BEEBY, David**

(57) Abstract :
A method of manufacturing an article (such as a dental restoration) comprising taking an article, comprising at least one product (such as a dental restoration) in an initial state , formed from a powdered material , layer- by- layer and electrochemically processing at least a select region of the at least one product (such as a dental restoration) so as to smoothen at least said select region.

No. of Pages : 35 No. of Claims : 40

(12) PATENT APPLICATION PUBLICATION
(21) Application No.9529/DELNP/2014 A
(19) INDIA
(22) Date of filing of Application :12/11/2014
(43) Publication Date : 17/07/2015

(54) Title of the invention : A METHOD OF PRODUCTION OF 2 4 DIHYDROXYBUTYRIC ACID

(51) International classification :C12P7/42,C12N9/00,C12N9/04
(31) Priority Document No :PCT/IB2012/001123
(32) Priority Date :26/04/2012
(33) Name of priority country :
(86) International Application No :PCT/IB2013/001071
Filing Date :25/04/2013
(87) International Publication No :WO 2013/160762
(61) Patent of Addition to Application Number :NA
Filing Date :NA
(62) Divisional to Application Number :NA
Filing Date :NA

(71)**Name of Applicant :**
**1)ADISSEO FRANCE S.A.S.**
Address of Applicant :Immeuble Antony Parc II, 10 ,place du Gnral de Gaulle, F -92160 Antony France
(72)**Name of Inventor :**
**1)WALTHER, Thomas**
**2)DRESSAIRE, Clmentine**
**3)CORDIER ,Hl¨ne**
**4)FRANCOIS ,Jean- Marie**

(57) Abstract :
The present invention deals with a method for the preparation of 2, 4 - dihydroxybutyric acid (2, 4 -DHB) comprising the successive steps of converting malate , succinyl -CoA and/or glyoxylate into malyl- CoA, converting malyl- CoA, previously obtained into malate- 4- semialdehyde, and converting malate- 4- semialdehyde into 2, 4- DHB using a DHB dehydrogenase.

No. of Pages : 155 No. of Claims : 25

(12) PATENT APPLICATION PUBLICATION
(19) INDIA
(22) Date of filing of Application :04/11/2014
(21) Application No.2221/MUMNP/2014 A
(43) Publication Date : 17/07/2015

(54) Title of the invention : APPARATUS SYSTEMS AND METHODS FOR IMPULSE NOISE DETECTION AND MITIGATION

(51) International classification :H04L1/20,H04L1/00
(31) Priority Document No :NA
(32) Priority Date :NA
(33) Name of priority country :NA
(86) International Application No :PCT/US2012/036843
Filing Date :07/05/2012
(87) International Publication No :WO 2013/169228
(61) Patent of Addition to Application Number :NA
Filing Date :NA
(62) Divisional to Application Number :NA
Filing Date :NA

(71)**Name of Applicant :**
**1)ADAPTIVE SPECTRUM AND SIGNAL ALIGNMENT INC.**
Address of Applicant :333 Twin Dolphin Drive Redwood City CA 94065 U.S.A.
(72)**Name of Inventor :**
**1)HWANG Chan Soo**
**2)DOGAN Mithat**
**3)CIOFFI John**
**4)FLOWERS Mark**
**5)BARKESHLI Sina**

(57) Abstract :
In accordance with embodiments disclosed herein there are provided apparatus systems and methods for impulse noise detection and mitigation. For example in one embodiment such means include means for detecting impulse noise; means for classifying the detected impulse noise into one of a plurality of impulse noise classes affecting communications on a Digital Subscriber Line (DSL line); means for selecting a noise mitigation strategy from among a plurality of noise mitigation strategies; means for applying the selected noise mitigation strategy; and means for validating application of the noise mitigation strategy.

No. of Pages : 62 No. of Claims : 56

(12) PATENT APPLICATION PUBLICATION
(21) Application No.2222/MUMNP/2014 A
(19) INDIA
(22) Date of filing of Application :04/11/2014
(43) Publication Date : 17/07/2015

(54) Title of the invention : PAPER SHEET PROCESSING DEVICE

(51) International classification :G07D9/00
(31) Priority Document No :NA
(32) Priority Date :NA
(33) Name of priority country :NA
(86) International Application No :PCT/JP2012/002480
Filing Date :10/04/2012
(87) International Publication No :WO 2013/153572
(61) Patent of Addition to Application Number :NA
Filing Date :NA
(62) Divisional to Application Number :NA
Filing Date :NA

(71)**Name of Applicant :**
**1)HITACHI OMRON TERMINAL SOLUTIONS CORP.**
Address of Applicant :6 3 Osaki 1 chome Shinagawa ku Tokyo 1418576 Japan
(72)**Name of Inventor :**
**1)HARA Hiroki**

(57) Abstract :
The objective of the present invention is in a paper sheet processing device to reduce the time needed for a scrutiny process. An ATM (10) houses banknotes (S) in denominational cassettes (140) by denomination and while displaying the current banknote (S) housing state of each denominational cassette (140) the form of the display of paper sheet housing state is caused to differ between denominational cassettes (140) at which an anomalous event inducing an obstacle to the identification of the number of housed banknotes (S) has not arisen and denominational cassettes (140) at which such an anomalous event has arisen.

No. of Pages : 61 No. of Claims : 5

(12) PATENT APPLICATION PUBLICATION
(19) INDIA
(22) Date of filing of Application :04/11/2014
(21) Application No.2223/MUMNP/2014 A
(43) Publication Date : 17/07/2015

(54) Title of the invention : VIDEO TRANSMISSION AND RECONSTRUCTION

(51) International classification :H04N7/14,G06K9/00,G06T9/20
(31) Priority Document No :13/482,808
(32) Priority Date :29/05/2012
(33) Name of priority country :U.S.A.
(86) International Application No :PCT/US2013/042715
Filing Date :24/05/2013
(87) International Publication No :WO 2013/181108
(61) Patent of Addition to Application Number :NA
Filing Date :NA
(62) Divisional to Application Number :NA
Filing Date :NA

(71)**Name of Applicant :**
**1)QUALCOMM INCORPORATED**
Address of Applicant :ATTN: International IP Administration 5775 Morehouse Drive San Diego California 92121 1714 U.S.A.
(72)**Name of Inventor :**
**1)LAW Henry Hing**
**2)KWONG Tung Chuen**
**3)CHAN Benjamin Koon Pan**
**4)ZHOU Yugang**
**5)YU Wilson Hung**

(57) Abstract :
Systems and methods for reducing the bandwidth required to transmit video streams related to faces re described herein. In some aspects contour information from face recognition technology is captured at a transmitting device and sent to a receiving device. The contour information may be used to reconstruct the face at the receiving device without the need to send an entire video frame of the face.

No. of Pages : 29 No. of Claims : 25

(12) PATENT APPLICATION PUBLICATION
(21) Application No.2225/MUMNP/2014 A
(19) INDIA
(22) Date of filing of Application :04/11/2014
(43) Publication Date : 17/07/2015

(54) Title of the invention : METHOD FOR COMPENSATING THE PLAY IN THE GEARING BETWEEN A STEERING WHEEL AND A STEERING VALVE

(51) International classification :B62D5/09
(31) Priority Document No :10 2012 104 369.8
(32) Priority Date :21/05/2012
(33) Name of priority country :Germany
(86) International Application No :PCT/EP2013/060193
Filing Date :16/05/2013
(87) International Publication No :WO 2013/174723
(61) Patent of Addition to Application Number :NA
Filing Date :NA
(62) Divisional to Application Number :NA
Filing Date :NA

(71)**Name of Applicant :**
**1)TEDRIVE STEERING SYSTEMS GMBH**
Address of Applicant :Henry Ford II Str. 15 42489 W¼lfrath Germany
(72)**Name of Inventor :**
**1)KIRSCHBAUM Sven**
**2)SCHULTE Olaf**

(57) Abstract :
The invention relates to an operating method for a hydraulic servo steering system of a motor vehicle wherein a steering cylinder that applies the supporting force to a steering gearing is integrated into a hydraulic circuit by means of a steering valve the steering valve opening of which specifies the supporting force wherein the supporting force is set by the steering valve in accordance with a steering torque applied to a steering wheel by means of a gearing having play and the steering system also comprises an actuator that acts on the gearing in order to cause the relative adjustment of the gearing wherein the operating method provides a compensation step in which provided that a steering direction reversal is detected the gearing is relatively adjusted by means of the actuator in a direction opposite the prior engagement direction of the gearing for a predefined duration or a predefined adjustment distance.

No. of Pages : 12 No. of Claims : 13

(12) PATENT APPLICATION PUBLICATION
(21) Application No.2486/MUMNP/2014 A
(19) INDIA
(22) Date of filing of Application :08/12/2014
(43) Publication Date : 17/07/2015

(54) Title of the invention : DIFFERENTIAL PRESSURE TRANSMITTER WITH PRESSURE SENSOR

(51) International classification :G01L27/00
(31) Priority Document No :13/527075
(32) Priority Date :19/06/2012
(33) Name of priority country :U.S.A.
(86) International Application No :PCT/US2013/035605
Filing Date :08/04/2013
(87) International Publication No :WO 2013/191792
(61) Patent of Addition to Application Number :NA
Filing Date :NA
(62) Divisional to Application Number :NA
Filing Date :NA

(71)**Name of Applicant :**
**1)ROSEMOUNT INC.**
Address of Applicant :8200 Market Boulevard Chanhassen MN 55317 U.S.A.
(72)**Name of Inventor :**
**1)HEDTKE Robert C.**

(57) Abstract :
A process variable transmitter (36) for measuring a pressure of a process fluid includes a first inlet (386) configured to couple to a first process pressure (P) and a second inlet (386) configured to couple to a second process pressure (P). A differential pressure sensor (56) couples to the first and second inlets (386) and provides an output related to a differential pressure between the first pressure and the second pressure. A first pressure sensor (304A) couples to the first inlet (386) and provides an output related to the first pressure. Transmitter circuitry (72) provides a transmitter output based upon the output from the differential pressure sensor and further provides enhanced functionality based upon the output from the first pressure sensor.

No. of Pages : 22 No. of Claims : 20

(12) PATENT APPLICATION PUBLICATION
(19) INDIA
(22) Date of filing of Application :08/12/2014
(21) Application No.2487/MUMNP/2014 A
(43) Publication Date : 17/07/2015

(54) Title of the invention : PHARMACEUTICAL COMPOSITION OF ENTECAVIR AND PROCESS OF MANUFACTURING

(51) International classification :A61K9/16,A61J3/10,A61K31/522
(31) Priority Document No :2779052
(32) Priority Date :31/05/2012
(33) Name of priority country :Canada
(86) International Application No :PCT/CA2013/000517
Filing Date :28/05/2013
(87) International Publication No :WO 2013/177672
(61) Patent of Addition to Application Number :NA
Filing Date :NA
(62) Divisional to Application Number :NA
Filing Date :NA

(71)**Name of Applicant :**
**1)PHARMASCIENCE INC.**
Address of Applicant :Suite 100 6111 Royalmount Avenue Montreal Qubec H4P 2T4 Canada
(72)**Name of Inventor :**
**1)PHILIP Mathew**
**2)TALWAR Naresh**

(57) Abstract :
The present invention relates to an adhesive free pharmaceutical composition for the treatment of hepatitis B virus infections comprising at least one guanine based antiviral active pharmaceutical ingredient. More specifically the present invention concerns an oral pharmaceutical composition comprising: adhesive free granules comprising therapeutically effective amount of entecavir and at least one intra granular pharmaceutically acceptable excipient; at least one extra granular pharmaceutical excipient and optionally a moisture barrier coating. A method of manufacturing an adhesive free pharmaceutical composition is also disclosed.

No. of Pages : 21 No. of Claims : 37

(12) PATENT APPLICATION PUBLICATION
(19) INDIA
(22) Date of filing of Application :08/12/2014

(21) Application No.2488/MUMNP/2014 A
(43) Publication Date : 17/07/2015

(54) Title of the invention : A SOLAR ENERGY SYSTEM

| | |
|---|---|
| (51) International classification | :F24D12/02,F24D11/00,F24D19/10 |
| (31) Priority Document No | :2012902454 |
| (32) Priority Date | :12/06/2012 |
| (33) Name of priority country | :Australia |
| (86) International Application No | :PCT/AU2013/000620 |
| Filing Date | :11/06/2013 |
| (87) International Publication No | :WO 2013/185172 |
| (61) Patent of Addition to Application Number | :NA |
| Filing Date | :NA |
| (62) Divisional to Application Number | :NA |
| Filing Date | :NA |

(71)**Name of Applicant :**
**1)ENDLESS SOLAR CORPORATION LTD**
Address of Applicant :Level 10 406 Collins Street Melbourne Victoria 3000 Australia
(72)**Name of Inventor :**
**1)DENNIS Michael**

(57) Abstract :
The present disclosure provides a solar energy system that comprises a solar collector for providing energy generated from incident solar radiation. The solar energy system also comprises a first heat exchange system that has an ejector that is arranged to operate using at least a portion of the energy provided by the solar energy collector. Further the solar energy system comprises a second heat exchange system arranged to operate using energy from an energy source other than a solar energy source. The solar energy system is arranged for transfer of thermal energy between the first heat exchange system and a region and between the second heat exchange system and the region. The solar energy system is arranged to control a relative contribution of the first and second heat exchange systems to the transfer of the thermal energy.

No. of Pages : 42 No. of Claims : 21

(12) PATENT APPLICATION PUBLICATION
(19) INDIA
(22) Date of filing of Application :08/12/2014
(21) Application No.2489/MUMNP/2014 A
(43) Publication Date : 17/07/2015

(54) Title of the invention : A SOLAR ENERGY SYSTEM

(51) International classification :F24J2/00,F24D11/00,F24D12/00
(31) Priority Document No :2012902456
(32) Priority Date :12/06/2012
(33) Name of priority country :Australia
(86) International Application No :PCT/AU2013/000619
Filing Date :11/06/2013
(87) International Publication No :WO 2013/185171
(61) Patent of Addition to Application Number :NA
Filing Date :NA
(62) Divisional to Application Number :NA
Filing Date :NA

(71)**Name of Applicant :**
**1)ENDLESS SOLAR CORPORATION LTD**
Address of Applicant :Level 10 406 Collins Street Melbourne Victoria 3000 Australia
(72)**Name of Inventor :**
**1)DENNIS Michael**

(57) Abstract :
The present disclosure provides a solar energy system. The solar energy system comprises a solar collector for providing energy generated from incident solar radiation. The system comprises a first heat exchange system comprising an ejector that is arranged to operate using at least a portion of the energy provided by the solar energy collector. Further the system comprises a second heat exchange system arranged to operate using energy from an energy source other than a source of solar source. The solar energy system is arranged for direct or indirect transfer of thermal energy between the first heat exchange system and a region and between the second heat exchange system and the region. Further he solar energy system is arranged for direct or indirect transfer of thermal energy from the second heat exchange system for use by at least one of: the first heat exchange system and a system for heating water.

No. of Pages : 30 No. of Claims : 21

(12) PATENT APPLICATION PUBLICATION
(19) INDIA
(22) Date of filing of Application :09/12/2014
(21) Application No.2494/MUMNP/2014 A
(43) Publication Date : 17/07/2015

(54) Title of the invention : AUDIO/VIDEO DEVICE

(51) International classification :H04S5/02,H04N5/64,H04R1/32
(31) Priority Document No :2012-147644
(32) Priority Date :29/06/2012
(33) Name of priority country :Japan
(86) International Application No :PCT/JP2013/063758
Filing Date :17/05/2013
(87) International Publication No :WO 2014/002640
(61) Patent of Addition to Application Number :NA
Filing Date :NA
(62) Divisional to Application Number :NA
Filing Date :NA

(71)**Name of Applicant :**
**1)SONY CORPORATION**
Address of Applicant :1 7 1 Konan Minato ku Tokyo 1080075 Japan
(72)**Name of Inventor :**
**1)MASUDA Hiroshi**
**2)SAITO Tamotsu**

(57) Abstract :
An audio/video device comprises: a display unit which displays a video; and one or a plurality of main speakers and a plurality of sub speakers having a sound output face which emits sound corresponding to the video. The sound output face in at least one of the plurality of sub speakers is positioned to face more obliquely away from the display unit than the sound output face of the main speaker.

No. of Pages : 49 No. of Claims : 18

(12) PATENT APPLICATION PUBLICATION
(19) INDIA
(22) Date of filing of Application :09/12/2014
(21) Application No.2495/MUMNP/2014 A
(43) Publication Date : 17/07/2015

(54) Title of the invention : METHOD FOR DECODING MATRIX TYPE TWO DIMENSIONAL CODE

(51) International classification :G06K7/10
(31) Priority Document No :201210145746.2
(32) Priority Date :11/05/2012
(33) Name of priority country :China
(86) International Application No :PCT/CN2013/075517
Filing Date :10/05/2013
(87) International Publication No :WO 2013/166995
(61) Patent of Addition to Application Number :NA
Filing Date :NA
(62) Divisional to Application Number :NA
Filing Date :NA

(71)**Name of Applicant :**
**1)SHENZHEN MPR TECHNOLOGY CO. LTD**
Address of Applicant :Room 1004 10th Floor GDC Building No.9 Gaoxin Middle 3rd Road High tech Zone Middle Science & Technology Park Nanshan District Shenzhen Guangdong 518000 China
(72)**Name of Inventor :**
**1)LI Zhengfang**
**2)CHANG Zhiguo**
**3)LV Yingfeng**

(57) Abstract :
Provided is a method for decoding a matrix type two dimensional code. A decoded matrix type two dimensional code image is a matrix type two dimensional code symbol jointing code matrix combined with a plurality of same unit code patterns; The image obtained by scanning need not contain a single complete unit code pattern. The decoding procedure thereof comprises: obtaining a binarization image of a matrix type two dimensional code symbol joining code matrix to be decoded; locating the location of each data point in the unit code pattern to which it is subordinate to restore a complete unit code pattern; and then decoding same. The present invention only needs an area which is twice as large as that of the unit code pattern when decoding under the circumstance that the condition for scanning and graphing is the worst but the decoding method in the prior art at least needs an area which is six times as large as that of the unit code pattern under the worst condition for scanning and graphing. In addition the oblique situation of the code pattern image in the present invention can also be applicable the operation quantity is smaller than that of the prior art and the resources are saved.

No. of Pages : 27 No. of Claims : 10

(12) PATENT APPLICATION PUBLICATION
(19) INDIA
(22) Date of filing of Application :09/12/2014
(21) Application No.2496/MUMNP/2014 A
(43) Publication Date : 17/07/2015

(54) Title of the invention : SYNTHESIS OF ANTIVIRAL COMPOUND

(51) International classification :C07D403/04,C07D403/14
(31) Priority Document No :61/655935
(32) Priority Date :05/06/2012
(33) Name of priority country :U.S.A.
(86) International Application No :PCT/US2013/044148
Filing Date :04/06/2013
(87) International Publication No :WO 2013/184702
(61) Patent of Addition to Application Number :NA
Filing Date :NA
(62) Divisional to Application Number :NA
Filing Date :NA

(71)**Name of Applicant :**
**1)GILEAD PHARMASSET LLC**
Address of Applicant :333 Lakeside Drive Foster City California 94404 U.S.A.
(72)**Name of Inventor :**
**1)SCOTT Robert William**
**2)VITALE Justin Philip**
**3)MATTHEWS Kenneth Stanley**
**4)TERESK Martin Gerald**
**5)FORMELLA Alexandra**
**6)EVANS Jared Wayne**

(57) Abstract :
The present disclosure provides processes for the preparation of a compound of formula I: (I) which is useful as an antiviral agent. The disclosure also provides compounds that are synthetic intermediates to compounds of formula I.

No. of Pages : 69 No. of Claims : 28

(12) PATENT APPLICATION PUBLICATION
(19) INDIA
(22) Date of filing of Application :09/12/2014
(21) Application No.2497/MUMNP/2014 A
(43) Publication Date : 17/07/2015

(54) Title of the invention : IMIDAZO[1 2 B]PYRIDAZINE DERIVATIVE AS KINASE INHIBITOR

(51) International classification :C07D487/04,A61K31/5025,A61P35/00
(31) Priority Document No :2012-127079
(32) Priority Date :04/06/2012
(33) Name of priority country :Japan
(86) International Application No :PCT/JP2013/065328
Filing Date :03/06/2013
(87) International Publication No :WO 2013/183578
(61) Patent of Addition to Application Number :NA
Filing Date :NA
(62) Divisional to Application Number :NA
Filing Date :NA

(71)**Name of Applicant :**
**1)DAIICHI SANKYO COMPANY LIMITED**
Address of Applicant :3 5 1Nihonbashi HonchoChuo ku Tokyo 1038426 Japan
(72)**Name of Inventor :**
**1)TAKEDA Yasuyuki**
**2)YOSHIKAWA Kenji**
**3)KAGOSHIMA Yoshiko**
**4)YAMAMOTO Yuko**
**5)TANAKA Ryoichi**
**6)TOMINAGA Yuichi**
**7)KIGA Masaki**
**8)HAMADA Yoshito**

(57) Abstract :
The present invention provides a compound useful in treating tumors by ROS1 kinase enzyme activity inhibitory action and NTRK kinase enzyme inhibitory action or a pharmacologically acceptable salt thereof. A compound having an imidazo[1 2 b]pyridazine structure represented by general formula (I) a pharmacologically acceptable salt thereof or pharmaceutical compositions comprising such compounds. (In the formula R G T Y Y Y and Y are as defined in the present description.)

No. of Pages : 286 No. of Claims : 47

(12) PATENT APPLICATION PUBLICATION
(19) INDIA
(22) Date of filing of Application :09/12/2014
(21) Application No.2498/MUMNP/2014 A
(43) Publication Date : 17/07/2015

(54) Title of the invention : PLANTS HAVING INCREASED TOLERANCE TO HERBICIDES

(51) International classification :C12N15/82,C07K14/195
(31) Priority Document No :61/661364
(32) Priority Date :19/06/2012
(33) Name of priority country :U.S.A.
(86) International Application No :PCT/EP2013/062744
Filing Date :19/06/2013
(87) International Publication No :WO 2013/189984
(61) Patent of Addition to Application Number :NA
Filing Date :NA
(62) Divisional to Application Number :NA
Filing Date :NA

(71)**Name of Applicant :**
**1)BASF SE**
Address of Applicant :67056 Ludwigshafen Germany
(72)**Name of Inventor :**
**1)APONTE Raphael**
**2)TRESCH Stefan**
**3)WITSCHEL Matthias**
**4)LERCHL Jens**
**5)PAULIK Jill Marie**
**6)BROMMER Chad**
**7)SEISER Tobias**
**8)MASSA Dario**

(57) Abstract :
The present invention refers to a method for controlling undesired vegetation at a plant cultivation site the method comprising the steps of providing at said site a plant that comprises at least one nucleic acid comprising a nucleotide sequence encoding a wild type or a mutated protoporphyrinogen oxidase (PPO) which is resistant or tolerant to a PPO inhibiting herbicide by applying to said site an effective amount of said herbicide. The invention further refers to plants comprising wild type or mutated PPO enzymes and methods of obtaining such plants.

No. of Pages : 182 No. of Claims : 23

(12) PATENT APPLICATION PUBLICATION
(19) INDIA
(22) Date of filing of Application :09/12/2014
(21) Application No.2504/MUMNP/2014 A
(43) Publication Date : 17/07/2015

(54) Title of the invention : VISIBLE AND NEAR INFRA RED OPTICAL SENSOR

| | |
|---|---|
| (51) International classification | :H01L31/101,H01L31/09,H01L31/0224 |
| (31) Priority Document No | :220392 |
| (32) Priority Date | :13/06/2012 |
| (33) Name of priority country | :Israel |
| (86) International Application No | :PCT/IL2013/050483 |
| Filing Date | :05/06/2013 |
| (87) International Publication No | :WO 2013/186773 |
| (61) Patent of Addition to Application Number | :NA |
| Filing Date | :NA |
| (62) Divisional to Application Number | :NA |
| Filing Date | :NA |

(71)**Name of Applicant :**
**1)HIRSCH ISRAEL**
Address of Applicant :79 Brenner St. I 46427 Hertzilia Israel Israel
(72)**Name of Inventor :**
**1)HIRSCH ISRAEL**

(57) Abstract :
A detector for detecting visible and NIR electromagnetic radiation is disclosed. The aforesaid detector comprises: (a) a substrate made of conventional temperature grown semi insulating gallium arsenide (GaAs); (b) an active layer; and (c) means for applying electric fields to the active layer. The active layer is made of lowtemperature grown semi insulating GaAs or made of ion implanted conventional temperature grown semi insulating GaAs. Also disclosed an imager based on monolithically integrated array of detectors and read out integrated circuit (ROIC).

No. of Pages : 30 No. of Claims : 23

(12) PATENT APPLICATION PUBLICATION
(19) INDIA
(22) Date of filing of Application :09/12/2014
(21) Application No.2505/MUMNP/2014 A
(43) Publication Date : 17/07/2015

(54) Title of the invention : CLEANING APPARATUS

(51) International classification :B08B6/00,B08B1/04,H05K3/26
(31) Priority Document No :2012-129341
(32) Priority Date :06/06/2012
(33) Name of priority country :Japan
(86) International Application No :PCT/JP2013/003343
Filing Date :27/05/2013
(87) International Publication No :WO 2013/183248
(61) Patent of Addition to Application Number :NA
Filing Date :NA
(62) Divisional to Application Number :NA
Filing Date :NA

(71)**Name of Applicant :**
**1)BANDO CHEMICAL INDUSTRIES, LTD.**
Address of Applicant :6 6Minatojima Minamimachi 4 chomeChuo ku Kobe shi Hyogo 6500047 Japan
(72)**Name of Inventor :**
**1)MATSUMOTO Hideki**

(57) Abstract :
The purpose of the present invention is to provide a cleaning apparatus which is capable of efficiently removing dust and which has reduced cost and size. A cleaning apparatus (1) removes using an electrostatic force dust on the surface (S1) of a subject to be cleaned (S) and the cleaning apparatus is provided with a cleaning roller (2) to be brought into contact with the surface (S1) of the subject to be cleaned (S) and brush rollers (3A 3B) which remove the dust on the surface of the cleaning roller (2) by being in contact with the cleaning roller (2). Since dust on the surface of the cleaning roller (2) is removed by means of the brush rollers (3A 3B) the dust can be efficiently removed.

No. of Pages : 35 No. of Claims : 9

(12) PATENT APPLICATION PUBLICATION
(21) Application No.2506/MUMNP/2014 A
(19) INDIA
(22) Date of filing of Application :10/12/2014
(43) Publication Date : 17/07/2015

(54) Title of the invention : HEAD MOUNTED DISPLAY DEVICE AND OPTICAL UNIT

(51) International classification :G02B27/02
(31) Priority Document No :2012-150702
(32) Priority Date :04/07/2012
(33) Name of priority country :Japan
(86) International Application No :PCT/JP2013/063369
Filing Date :14/05/2013
(87) International Publication No :WO 2014/006979
(61) Patent of Addition to Application Number :NA
Filing Date :NA
(62) Divisional to Application Number :NA
Filing Date :NA

(71)**Name of Applicant :**
**1)SONY CORPORATION**
Address of Applicant :1 7 1 Konan Minato Ku Tokyo 1080075 Japan
(72)**Name of Inventor :**
**1)HIRAI Shinji**

(57) Abstract :
Provided is a head mounted display device constituted such that a display panel can be accurately aligned according to optical characteristics of an eyepiece. An eyepiece optical system is constituted of a transparent resin molded lens and fixation pins to be inserted into fixation holes on the display panel/assembly side are formed integrally on the four corners of the lens in closest proximity to the display panel. The four fixation pins (1002 1005) are disposed in locations through which light for an image displayed in the active area of the display panel does not pass. In addition a group of the fixation pin (1002) and fixation pin (1005) and a group of the fixation pin (1003) and fixation pin (1004) are each disposed in positions so as to be symmetrical with respect to the optical center of the lens portion (1001).

No. of Pages : 47 No. of Claims : 17

(12) PATENT APPLICATION PUBLICATION
(21) Application No.2507/MUMNP/2014 A
(19) INDIA
(22) Date of filing of Application :10/12/2014
(43) Publication Date : 17/07/2015

(54) Title of the invention : NETWORK DRIVEN CELL RESELECTION METHOD FOR UES PLAYING EMBMS CONTENT IN UNICAST IDLE MODE

(51) International classification :H04W36/24
(31) Priority Document No :61/665277
(32) Priority Date :27/06/2012
(33) Name of priority country :U.S.A.
(86) International Application No :PCT/US2013/048367
Filing Date :27/06/2013
(87) International Publication No :WO 2014/004927
(61) Patent of Addition to Application Number :NA
Filing Date :NA
(62) Divisional to Application Number :NA
Filing Date :NA

(71)**Name of Applicant :**
**1)QUALCOMM INCORPORATED**
Address of Applicant :Attn: International IP Administration 5775 Morehouse Drive San Diego California 92121 1714 U.S.A.

(72)**Name of Inventor :**
**1)GHOLMIEH Ralph Akram**
**2)NAIK Nagaraju**
**3)VEEREPALLI Sivaramakrishna**
**4)LEE Kuo Chun**
**5)SHAUH Jack S.**

(57) Abstract :
Techniques are provided for a broadcast client of a wireless communication network. A method may include receiving broadcast content via broadcast delivery on a first resource associated with a first set of carriers. The method may include determining during unicast idle mode a second set of carriers comprising neighbor carriers in a current cell. The method may include modifying handoff priorities of the first set of carriers and the second set of carriers based on membership of each carrier in a common set of carriers comprising the first and second sets of carriers and further based on a priority order specified by the wireless communication network. The method may include determining whether to hand over to at least one carrier in one of the first and second sets of carriers based on a handoff decision that takes into account the modified handoff priorities.

No. of Pages : 57 No. of Claims : 32

(12) PATENT APPLICATION PUBLICATION
(19) INDIA
(22) Date of filing of Application :08/12/2014
(21) Application No.2490/MUMNP/2014 A
(43) Publication Date : 17/07/2015

(54) Title of the invention : OPTIMISED METHOD FOR LOADING RADIOACTIVE ELEMENTS INTO A PACKAGE

(51) International classification :G21C19/07,G21F5/005,G21F5/14
(31) Priority Document No :12 55601
(32) Priority Date :15/06/2012
(33) Name of priority country :France
(86) International Application No :PCT/EP2013/062275
Filing Date :13/06/2013
(87) International Publication No :WO 2013/186312
(61) Patent of Addition to Application Number :NA
Filing Date :NA
(62) Divisional to Application Number :NA
Filing Date :NA

(71)**Name of Applicant :**
**1)TN INTERNATIONAL**
Address of Applicant :1 rue des Hrons F 78180 Montigny Le Bretonneux France
(72)**Name of Inventor :**
**1)LELEU Gilda**
**2)VAUDRAY Herv**

(57) Abstract :
The invention concerns a method of loading radioactive elements (8) into a package comprising the following steps: (a) installing in a pool a plurality of radioactive elements (8) in a storage basket (30) provided with radiological protection means (32); (b) extracting from the pool the basket (30) loaded with the radioactive elements (8); and (c) loading the basket (30) loaded with the radioactive elements (8) into the package.

No. of Pages : 20 No. of Claims : 9

(12) PATENT APPLICATION PUBLICATION
(19) INDIA
(22) Date of filing of Application :08/12/2014
(21) Application No.2491/MUMNP/2014 A
(43) Publication Date : 17/07/2015

(54) Title of the invention : CONTINUOUS CLOSURE TAPE ROLL FOR A DIAPER WITH PRECOATED INACTIVE ADHESIVE REGIONS

(51) International classification :A61F13/15,A61F13/56,A61F13/62
(31) Priority Document No :12172176.5
(32) Priority Date :15/06/2012
(33) Name of priority country :EPO
(86) International Application No :PCT/EP2013/062305
Filing Date :13/06/2013
(87) International Publication No :WO 2013/186324
(61) Patent of Addition to Application Number :NA
Filing Date :NA
(62) Divisional to Application Number :NA
Filing Date :NA

(71)**Name of Applicant :**
**1)BENTO BANTCILIK VE TEMIZLIK MADDELERI SANAYI TICARET A.S.**
Address of Applicant :San Bir Bulvari 4. Bolge 10. Cadde No: 178 Cakmakli 34909 Istanbul Turkey
(72)**Name of Inventor :**
**1)KUS Ercan**

(57) Abstract :
The present invention proposes a method for forming a roll carrying a certain length of closure tape for continuous feed into a diaper manufacturing line said method comprising the steps of lamination of a continuous substrate with a continuous mechanical fastener strip at a distal portion of said substrate in the cross direction application of adhesive to a second distal edge portion of said substrate in the cross direction and winding said adhesive applied continuous substrate into a roll. Said method further comprises unwinding a roll of a certain length of closure tape subjecting said certain length of unwound closure tape to heat by means of heated cylinders after the open time of said pre coated adhesive is terminated cutting said certain length of unwound closure tape to specific shapes in the form of closure tapes attaching said shaped closure tapes to diaper bodies at said adhesive pre coated regions.

No. of Pages : 12 No. of Claims : 6

(12) PATENT APPLICATION PUBLICATION
(19) INDIA
(22) Date of filing of Application :08/12/2014
(21) Application No.2492/MUMNP/2014 A
(43) Publication Date : 17/07/2015

(54) Title of the invention : COMPOSTIONS AND METHODS FOR CANCER IMMUNOTHERAPY

| | |
|---|---|
| (51) International classification | :A61K39/395, C07K14/52 |
| (31) Priority Document No | :61/657574 |
| (32) Priority Date | :08/06/2012 |
| (33) Name of priority country | :U.S.A. |
| (86) International Application No | :PCT/US2013/044744 |
| Filing Date | :07/06/2013 |
| (87) International Publication No | :WO 2013/185052 |
| (61) Patent of Addition to Application Number | :NA |
| Filing Date | :NA |
| (62) Divisional to Application Number | :NA |
| Filing Date | :NA |

(71)**Name of Applicant :**
**1)ADURO BIOTECH**
Address of Applicant :626 Bancroft Way Suite 3C Berkeley CA 94710 2225 U.S.A.
**2)THE JOHNS HOPKINS UNIVERSITY**
(72)**Name of Inventor :**
**1)DUBENSKY Thomas W.**
**2)LEONG Meredith Lia Ling**
**3)PARDOLL Drew M.**
**4)KIM Young Jun**

(57) Abstract :
The present invention provides a combination therapy which relies on a small molecule immune stimulator cyclic di nucleotide (CDN) that activates DCs via a recently discovered cytoplasmic receptor known as STING (Stimulator of Interferon Genes) formulated with allogeneic human tumor cell lines engineered to secrete high amounts of GM CSF. This combination therapy can provide an ideal synergy of multiple tumor associated antigens DC recruitment and proliferation coupled with a potent DC activation stimulus.

No. of Pages : 51 No. of Claims : 19

(12) PATENT APPLICATION PUBLICATION
(19) INDIA
(22) Date of filing of Application :08/12/2014
(21) Application No.2493/MUMNP/2014 A
(43) Publication Date : 17/07/2015

(54) Title of the invention : AN EJECTOR

(51) International classification :F04F5/00,F25B1/06
(31) Priority Document No :2012902457
(32) Priority Date :12/06/2012
(33) Name of priority country :Australia
(86) International Application No :PCT/AU2013/000393
Filing Date :16/04/2013
(87) International Publication No :WO 2013/185164
(61) Patent of Addition to Application Number :NA
Filing Date :NA
(62) Divisional to Application Number :NA
Filing Date :NA

(71)**Name of Applicant :**
**1)ENDLESS SOLAR CORPORATION LTD**
Address of Applicant :Level 10 406 Collins Street Melbourne Victoria 3000 Australia
(72)**Name of Inventor :**
**1)DENNIS Michael**

(57) Abstract :
The present disclosure provides an ejector that comprises a housing portion and first and second fluid inlets. The ejector further comprises a fluid outlet and a fluid nozzle that is positioned in the housing and coupled to the first fluid inlet. The fluid nozzle is arranged such that a first fluid that is received by the first inlet at a first pressure PI has a second pressure P2 after passing through the fluid nozzle. The pressure P2 lower that the pressure PI. The ejector also comprises a mixing region that is arranged such that the first fluid when passing through the mixing region draws a second fluid from the second fluid inlet such that the first and second fluids mix. The ejector has an ejector diffuser region that has a cross sectional area that increases in diameter in a direction towards the fluid outlet and is arranged such that the mixture of the first and second fluid exits the ejector through the fluid outlet with a third pressure. The ejector is arranged such that a position of an outlet of the fluid nozzle relative to the mixing region is adjusted dependent on PI P2 and/or P3.

No. of Pages : 27 No. of Claims : 27

(12) PATENT APPLICATION PUBLICATION
(19) INDIA
(22) Date of filing of Application :09/12/2014
(21) Application No.2500/MUMNP/2014 A
(43) Publication Date : 17/07/2015

(54) Title of the invention : BACULOVIRAL DNA ELEMENTS FOR THE EXPRESSION OF RECOMBINANT PROTEINS IN A HOST CELL

(51) International classification :A01K67/033,C12N15/85,C12N15/866
(31) Priority Document No :61/495467
(32) Priority Date :10/06/2011
(33) Name of priority country :U.S.A.
(86) International Application No :PCT/EP2012/061081
Filing Date :12/06/2012
(87) International Publication No :WO 2012/168492
(61) Patent of Addition to Application Number :NA
Filing Date :NA
(62) Divisional to Application Number :NA
Filing Date :NA

(71)**Name of Applicant :**
**1)ALTERNATIVE GENE EXPRESSION S.L.**
Address of Applicant :Campus de Montegancedo E 28223 Pozueolo de Alacrc³n Madrid Spain
(72)**Name of Inventor :**
**1)GOMEZ SEBASTIAN Silvia**
**2)LPEZ VIDAL Javier**
**3)MARTINEZ ESCRIBANO Jos Angel**

(57) Abstract :
Reagents and methods are provided that allow for an improved expression of a recombinant protein. More specifically the introduction of recombinant DNA elements into a host cell allows for the increased expression of a recombinant protein an improvement of the correct folding of said protein and an increase in cell viability and proliferation of the host cell These recombinant DNA elements can be introduced into host cells for example via a recombinant baculovirus which has incorporated said elements. The recombinant DNA elements include nucleic acids encoding transcriptional regulators such as IE 0 and IE 1 transcriptional enhancer elements such as the homologous region () and promoters.

No. of Pages : 105 No. of Claims : 44

(12) PATENT APPLICATION PUBLICATION
(19) INDIA
(22) Date of filing of Application :09/12/2014
(21) Application No.2501/MUMNP/2014 A
(43) Publication Date : 17/07/2015

(54) Title of the invention : STRUCTURAL MEMBER IN FRAMEWORK STRUCTURES

(51) International classification :E04C3/08,E04B1/24,E04C3/04
(31) Priority Document No :2012/0405
(32) Priority Date :15/06/2012
(33) Name of priority country :Belgium
(86) International Application No :PCT/BE2013/000030
Filing Date :17/06/2013
(87) International Publication No :WO 2013/185186
(61) Patent of Addition to Application Number :NA
Filing Date :NA
(62) Divisional to Application Number :NA
Filing Date :NA

(71)**Name of Applicant :**
**1)SWENTERS Ivo**
Address of Applicant :Kapelstraat 11/5 B 3660 Opglabbeek Belgium
(72)**Name of Inventor :**
**1)SWENTERS Ivo**

(57) Abstract :
Elongated and thin walled structural member (10) with several views (101 102 103 104) extending along a longitudinal axis so that the member exhibits multiple rotational symmetry around the longitudinal axis (9). Each rotationally symmetric view includes a support surface ( 1 1) as support and fastening point for a wall facing and a connection surface (12 12 ) for fastening of the member to other structural members. It is characteristic that the connection surface (12 12 ) is disposed recessed with respect to the support surface (1 1) and at a spacing so that when the member is fastened with ordinary fastening means via the connection surface the fastening means do not protrude from the support surface. The connection surfaces (12 12 ) are provided with a regular pattern of holes ( 13) to serve as passages for the fastening means. An assembly of such structural members is also described.

No. of Pages : 29 No. of Claims : 18

(12) PATENT APPLICATION PUBLICATION
(21) Application No.2502/MUMNP/2014 A
(19) INDIA
(22) Date of filing of Application :09/12/2014
(43) Publication Date : 17/07/2015

(54) Title of the invention : QUANTIFICATION OF THE RELATIVE AMOUNT OF WATER IN THE TISSUE MICROCAPILLARY NETWORK

(51) International classification :G01R33/56,A61B5/05
(31) Priority Document No :12507364
(32) Priority Date :29/06/2012
(33) Name of priority country :Sweden
(86) International Application No :PCT/SE2013/050755
Filing Date :24/06/2013
(87) International Publication No :WO 2014/003643
(61) Patent of Addition to Application Number :NA
Filing Date :NA
(62) Divisional to Application Number :NA
Filing Date :NA

(71)**Name of Applicant :**
**1)CR DEVELOPMENT AB**
Address of Applicant :Box 124 S 221 00 Lund Sweden
(72)**Name of Inventor :**
**1)TOPGAARD Daniel**
**2)LASIC Samo**

(57) Abstract :
The present invention discloses a method for magnetic resonance (MR) imaging comprising: acquiring at least two MR images with different motion weighting originating from a RF and gradient pulse sequence causing signal attenuation from diffusion but not flow (flow compensated data); acquiring at least two MR images with different motion weighting originating from a RF and gradient pulse sequence causing signal attenuation from diffusion and flow (non compensated data); performing a model fit to the flow compensated and non compensated data in which at least one of the adjustable parameters are constrained to be the same for both sets of data; and obtaining quantitative information on microscopic flow by extracting at least one parameter of the intravoxel incoherent motion (IVIM) effect from the model fit said method being directed to diffusion perfusion.

No. of Pages : 32 No. of Claims : 15

(12) PATENT APPLICATION PUBLICATION
(19) INDIA
(22) Date of filing of Application :09/12/2014
(21) Application No.2503/MUMNP/2014 A
(43) Publication Date : 17/07/2015

(54) Title of the invention : PYROLYTIC OIL FOR THE MANUFACTURING OF CARBON BLACK

(51) International classification :C09C1/48,B29B17/00,C01B31/02
(31) Priority Document No :61/648143
(32) Priority Date :17/05/2012
(33) Name of priority country :U.S.A.
(86) International Application No :PCT/CA2013/000478
Filing Date :14/05/2013
(87) International Publication No :WO 2013/170358
(61) Patent of Addition to Application Number :NA
Filing Date :NA
(62) Divisional to Application Number :NA
Filing Date :NA

(71)**Name of Applicant :**
**1)WONG Wing Yam**
Address of Applicant :131 Sumac Hill Lane Dunrobin Ontario K0A 1T0 Canada
(72)**Name of Inventor :**
**1)WONG Wing Yam**

(57) Abstract :
An integrated scrap tire pyrolysis plant can be built to process scrap tires. The recovered carbon black can be used in rubber and plastic industries. Oil and gas from the pyrolysis process can further be used in the production of virgin carbon black. Natural rubber is a sustainable feedstock for the manufacture of tires making the manufacture of virgin carbon black partially sustainable. A very low PAH carbon black can be produced by limiting the exit temperature of carbon black and tail gas prior to leaving the reaction chamber.

No. of Pages : 20 No. of Claims : 8

(12) PATENT APPLICATION PUBLICATION
(19) INDIA
(22) Date of filing of Application :10/12/2014
(21) Application No.2510/MUMNP/2014 A
(43) Publication Date : 17/07/2015

(54) Title of the invention : DEVICE FOR RECOVERING HEAT AND FUMES FROM SLAG RESULTING FROM THE STEEL PRODUCTION CYCLE

| | |
|---|---|
| (51) International classification | :C21B3/08,C21B13/00,C21B3/04 |
| (31) Priority Document No | :RM2012A000280 |
| (32) Priority Date | :15/06/2012 |
| (33) Name of priority country | :Italy |
| (86) International Application No | :PCT/IB2013/054556 |
| Filing Date | :03/06/2013 |
| (87) International Publication No | :WO 2013/186664 |
| (61) Patent of Addition to Application Number | :NA |
| Filing Date | :NA |
| (62) Divisional to Application Number | :NA |
| Filing Date | :NA |

(71)**Name of Applicant :**
**1)G.A.P. S.P.A.**
Address of Applicant :Via Giosue Carducci 47 I 24060 Sovere (Bergamo) Italy
(72)**Name of Inventor :**
**1)ZUCCHI Francesco**

(57) Abstract :
Described is a device for recovering heat and fumes from slag resulting from the steel production cycle which allows the heat emitted by the slag during the cooling to be used without the need to collect the slag in tubs which must then be transported to the cooling surface and tipped in order to discharge the slag; at the same time this device allows the fumes and consequently the heat and the pollutants which the slag emits during the tipping and the time on the cooling surface to be conveyed and treated.

No. of Pages : 17 No. of Claims : 10

(12) PATENT APPLICATION PUBLICATION
(19) INDIA
(22) Date of filing of Application :10/12/2014
(21) Application No.2511/MUMNP/2014 A
(43) Publication Date : 17/07/2015

(54) Title of the invention : PHARMACEUTICAL FORM FOR EXTENDED RELEASE OF ACTIVE SUBSTANCES

(51) International classification :A61K9/14,A61K9/22,A61K9/24
(31) Priority Document No :10 2012 105 512.2
(32) Priority Date :25/06/2012
(33) Name of priority country :Germany
(86) International Application No :PCT/EP2013/063163
Filing Date :24/06/2013
(87) International Publication No:WO 2014/001268
(61) Patent of Addition to Application Number :NA
Filing Date :NA
(62) Divisional to Application Number :NA
Filing Date :NA

(71)**Name of Applicant :**
**1)HENNIG ARZNEIMITTEL GMBH & CO. KG**
Address of Applicant :Liebigstrae 1 2 65439 Flrsheim am Main Germany
(72)**Name of Inventor :**
**1)FRANCAS Gernot**
**2)PRZYKLENK Karl Heinz**

(57) Abstract :
A pharmaceutical form is described which makes it possible to uniformly release an active substance over an extended period of time. The pharmaceutical form comprises an emulsifier with a polyalkylene oxide structural motif. The pharmaceutical form is suitable for releasing a second active substance alongside the first active substance. A uniform release is achieved even if the two active substances have completely different properties in terms of solubility. A production method for the pharmaceutical form and the use thereof are also described.

No. of Pages : 43 No. of Claims : 15

(12) PATENT APPLICATION PUBLICATION
(21) Application No.2512/MUMNP/2014 A
(19) INDIA
(22) Date of filing of Application :10/12/2014
(43) Publication Date : 17/07/2015

(54) Title of the invention : PIPERIDINYLPYRAZOLOPYRIDINE DERIVATIVE

(51) International classification :C07D471/04,A61K31/4545,A61K31/4709
(31) Priority Document No :2012-134431
(32) Priority Date :14/06/2012
(33) Name of priority country :Japan
(86) International Application No :PCT/JP2013/066306
Filing Date :13/06/2013
(87) International Publication No :WO 2013/187462
(61) Patent of Addition to Application Number :NA
Filing Date :NA
(62) Divisional to Application Number :NA
Filing Date :NA

(71)**Name of Applicant :**
**1)DAIICHI SANKYO COMPANY, LIMITED**
Address of Applicant :3 5 1Nihonbashi HonchoChuo ku Tokyo 1038426 Japan
(72)**Name of Inventor :**
**1)KOBAYASHI Hideki**
**2)OHKAWA Nobuyuki**
**3)TAKANO Daisuke**
**4)KUBOTA Hideki**
**5)ONODA Toshio**
**6)KANEKO Toshio**
**7)ARAI Masami**
**8)TERASAKA Naoki**

(57) Abstract :
A compound represented by general formula (I) [wherein R represents an aryl group which may be substituted or a heteroaryl group which may be substituted] or a pharmacologically acceptable salt thereof which has an excellent LCAT activation activity and is useful as an active ingredient for a therapeutic or prophylactic agent for arteriosclerosis arteriosclerotic heart diseases coronary heart diseases (including heart failure cardiac infarction angina pectoris cardiac ischemia cardiovascular disturbance and angiogenic restenosis) cerebrovascular diseases (including stroke and cerebral infarction) peripheral vascular diseases (including diabetic vascular complications) dyslipidemia low HDL cholesteremia or renal diseases particularly an active ingredient for an anti arteriosclerosis agent.

No. of Pages : 323 No. of Claims : 41

(12) PATENT APPLICATION PUBLICATION
(19) INDIA
(22) Date of filing of Application :10/12/2014
(21) Application No.2513/MUMNP/2014 A
(43) Publication Date : 17/07/2015

(54) Title of the invention : METHOD AND COMPOUNDS FOR INHIBITING THE MCM COMPLEX AND THEIR APPLICATION IN CANCER TREATMENT

| | |
|---|---|
| (51) International classification | :A61K31/56,A61K47/48,A61K47/30 |
| (31) Priority Document No | :61/644442 |
| (32) Priority Date | :09/05/2012 |
| (33) Name of priority country | :U.S.A. |
| (86) International Application No | :PCT/US2013/040287 |
| Filing Date | :09/05/2013 |
| (87) International Publication No | :WO 2013/169989 |
| (61) Patent of Addition to Application Number | :NA |
| Filing Date | :NA |
| (62) Divisional to Application Number | :NA |
| Filing Date | :NA |

(71)**Name of Applicant :**
**1)THE HONG KONG UNIVERSITY OF SCIENCE AND TECHNOLOGY**
Address of Applicant :Clear Water Bay Kowloon Hong Kong China
**2)HONG KONG BAPTIST UNIVERSITY**
**3)MACAU UNIVERSITY OF SCIENCE AND TECHNOLOGY**
(72)**Name of Inventor :**
**1)LIANG Chun**
**2)JIANG Zhihong**
**3)WANG Ziyi**
**4)YU Zhiling**
**5)WANG Jingrong**
**6)BAI Liping**

(57) Abstract :
A method for treating cancer by using an agent which is capable of inhibiting the functionality of the MCM complex a heterohexameric ring formed from six subunits in the process of DNA replication and a method of screening for such agents by detecting the locations and functions of the MCM subunits such as hMcm2 and hMcm6 in cells treated with candidate compounds.

No. of Pages : 38 No. of Claims : 10

(12) PATENT APPLICATION PUBLICATION
(19) INDIA
(22) Date of filing of Application :10/12/2014
(21) Application No.2514/MUMNP/2014 A
(43) Publication Date : 17/07/2015

(54) Title of the invention : PREPARATION METHOD FOR PERFLUORO 2 METHYL 3 PENTANONE AND INTERMEDIATE

| | |
|---|---|
| (51) International classification | :C07C49/167,C07C43/12,C07C21/18 |
| (31) Priority Document No | :201210197034.5 |
| (32) Priority Date | :15/06/2012 |
| (33) Name of priority country | :China |
| (86) International Application No | :PCT/CN2013/077217 |
| Filing Date | :14/06/2013 |
| (87) International Publication No | :WO 2013/185626 |
| (61) Patent of Addition to Application Number | :NA |
| Filing Date | :NA |
| (62) Divisional to Application Number | :NA |
| Filing Date | :NA |

(71)**Name of Applicant :**
**1)SINOCHEM LANTIAN CO. LTD.**
Address of Applicant :Sinochem Building No.96 Jiangnan Avenue Binjiang Hangzhou Zhejiang 310051 China
**2)ZHEJIANG LANTIAN ENVIRONMENTAL PROTECTION HI TECH CO. LTD.**
(72)**Name of Inventor :**
**1)NI Hang**
**2)ZHANG Jianjun**
**3)BAI Zhanqi**
**4)RAN Deqiang**
**5)PAN Yan**
**6)FANG Xiaoqing**

(57) Abstract :
Disclosed is a preparation method for perfluoro 2 methyl 3 pentanone. In the presence of fluoride salts and ether compounds perfluoro 2 3 epoxide 2 methyl pentane is converted into perfluoro 2 methyl 3 pentanone by a catalytic rearrangement reaction which has characteristics such as mild action condition fast reaction rate high reaction selectivity and high yield. The prepared perfluoro 2 methyl 3 pentanone can be used as detergent solvent and extinguishant. The perfluoro 2 3 epoxide 2 methyl pentane is prepared by using perfluoro 2 methyl 2 amylene as raw material to react with sodium hypochlorite and the perfluoro 2 methyl 2 amylene raw material is prepared through the catalytic isomerization reaction by using perfluoro 4 methyl 2 amylene as raw material.

No. of Pages : 29 No. of Claims : 10

(12) PATENT APPLICATION PUBLICATION
(19) INDIA
(22) Date of filing of Application :11/12/2014
(21) Application No.2524/MUMNP/2014 A
(43) Publication Date : 17/07/2015

(54) Title of the invention : AQUATIC BASED MICROALGAE PRODUCTION APPARATUS

(51) International classification :C12N1/12,C12M1/00,C12M3/00
(31) Priority Document No :13/473886
(32) Priority Date :17/05/2012
(33) Name of priority country :U.S.A.
(86) International Application No :PCT/US2012/042313
Filing Date :13/06/2012
(87) International Publication No :WO 2012/177463
(61) Patent of Addition to Application Number :NA
Filing Date :NA
(62) Divisional to Application Number :NA
Filing Date :NA

(71)**Name of Applicant :**
**1)REDFORD Daniel S.**
Address of Applicant :444 North Amelia Avenue Unit 5B San Dimas CA 91773 U.S.A.
(72)**Name of Inventor :**
**1)REDFORD Daniel S.**

(57) Abstract :
An aquatic based algae production apparatus employing a microalgae production support assembly and a cluster of six floating closed loop flatbed C02/02 gas permeable photobioreactors for microalgae industrial production are disclosed. The apparatus s bioreactors are submerged in the proximity of the water surface mark for maximum light exposure and for C02/02 continual diffusion. A microalgae processing and control assembly monitors the algae growth for each photo bioreactor in the cluster and cyclically harvests the microalgae. The microalgae are transferred into a submerged variable volume storage tank. Solar photovoltaic panels supply the energy required for the operation of the apparatus. Swivel electrical propellers attached to the bottom of the apparatus protective outer barrier control the apparatus s water deployment.

No. of Pages : 46 No. of Claims : 27

(12) PATENT APPLICATION PUBLICATION
(19) INDIA
(22) Date of filing of Application :11/12/2014
(21) Application No.2525/MUMNP/2014 A
(43) Publication Date : 17/07/2015

(54) Title of the invention : STABILIZER COMPOSITION RESIN COMPOSITION AND MOLDED PRODUCT USING SAME

(51) International classification :C08L101/00,C08K5/375
(31) Priority Document No :2012-119073
(32) Priority Date :24/05/2012
(33) Name of priority country :Japan
(86) International Application No :PCT/JP2013/064353
Filing Date :23/05/2013
(87) International Publication No :WO 2013/176216
(61) Patent of Addition to Application Number :NA
Filing Date :NA
(62) Divisional to Application Number :NA
Filing Date :NA

(71)**Name of Applicant :**
**1)ADEKA CORPORATION**
Address of Applicant :2 35 Higashiogu 7 chome Arakawa ku Tokyo 1160012 Japan
(72)**Name of Inventor :**
**1)KAWAMOTO Naoshi**
**2)NEGISHI Yoshinori**
**3)AYABE Takashi**
**4)URUSHIHARA Tsuyoshi**
**5)TEZUKA Tomomasa**
**6)YAMADA Shingo**

(57) Abstract :
Provided is a stabilizer composition which contains monoesters and diesters of alkylmercapto carboxylic acid of bisphenol sulfide and which maintains good handling properties without precipitation of solids even in low temperature environment. This stabilizer composition contains a diester represented by general formula (1) (In the formula R R and R independently represent a hydrogen atom and R and R independently represent an optionally substituted linear or branched alkyl group of 3 30 carbon atoms.) and a monoester represented by general formula (2) (In the formula R R and R independently represent a hydrogen atom and R represents an optionally substituted linear or branched alkyl group of 3 30 carbon atoms.) wherein the content of the diesters represented by formula (1) makes up more than 65 parts by mass and less than 80 parts by mass out of a total 100 parts by mass of the diesters represented by formula (1) and the monoesters represented by formula (2).

No. of Pages : 49 No. of Claims : 11

(12) PATENT APPLICATION PUBLICATION
(19) INDIA
(22) Date of filing of Application :12/12/2014
(21) Application No.2526/MUMNP/2014 A
(43) Publication Date : 17/07/2015

(54) Title of the invention : MEDICAMENT FORM FOR RELEASE OF ACTIVE INGREDIENTS

(51) International classification :A61K9/16
(31) Priority Document No :10 2012 105 528.9
(32) Priority Date :25/06/2012
(33) Name of priority country :Germany
(86) International Application No :PCT/EP2013/063162
Filing Date :24/06/2013
(87) International Publication No :WO 2014/001267
(61) Patent of Addition to Application Number :NA
Filing Date :NA
(62) Divisional to Application Number :NA
Filing Date :NA

(71)**Name of Applicant :**
**1)HENNIG ARZNEIMITTEL GMBH & CO. KG**
Address of Applicant :Liebigstrae 1 2 65439 Flrsheim am Main Germany
(72)**Name of Inventor :**
**1)FRANCAS Gernot**
**2)PRZYKLENK Karl Heinz**

(57) Abstract :
This invention is concerned with the provision of medicament forms which enable effective administration of a medicament which is usually taken twice or more daily by way of a single daily dose. This is achieved in accordance with the invention by provision of a medicament form comprising a core a gastric juice resistant intermediate layer disposed on the surface of the core and a shell disposed on the opposite side of the intermediate layer from the core. Both the core and the shell comprise a proportion of an active ingredient. The active ingredient is released in at least biphasic form from the medicament form the first phase relating to the immediate release of the active ingredient after ingestion into the gastric juice. The present invention additionally relates to a process for producing the medicament form and to uses thereof.

No. of Pages : 58 No. of Claims : 15

(12) PATENT APPLICATION PUBLICATION
(19) INDIA
(22) Date of filing of Application :12/12/2014
(21) Application No.2527/MUMNP/2014 A
(43) Publication Date : 17/07/2015

(54) Title of the invention : RADIO TRANSMISSION DEVICE AND RADIO TRANSMISSION METHOD

(51) International classification :H04Q 7/36, H04J 1/00
(31) Priority Document No :2006-140462
(32) Priority Date :19/05/2006
(33) Name of priority country :Japan
(86) International Application No :PCT/JP2007/060258
Filing Date :18/05/2007
(87) International Publication No :WO/2007/136002
(61) Patent of Addition to Application Number :NA
Filing Date :NA
(62) Divisional to Application Number :2448/MUMNP/2008
Filed on :14/11/2008

(71)**Name of Applicant :**
**1)PANASONIC INTELLECTUAL PROPERTY CORPORATION OF AMERICA**
Address of Applicant :20000 Mariner Avenue, Suite 200, Torrance CA 90503, U.S.A.
(72)**Name of Inventor :**
**1)IMAMURA, Daichi**
**2)SUZUKI, Hidetoshi**
**3)NISHIO, Akihiko**
**4)MATSUMOTO, Atsushi**

(57) Abstract :
Provided are a radio transmission device and a radio transmission method capable of improving downlink and uplink throughput even when performing dynamic symbol allocation. In the device and the method, BS and MS share a table correlating a basic TF as a combination of parameters such as TB size used for transmitting only user data, an allocation RB quantity, a modulation method, and an encoding ratio, with a derived TF having user data of different TB size by combining L1/L2 control information. Even when multiplexing L1/L2 control information, Index corresponding to the basic TF is reported from BS to MS.

No. of Pages : 65 No. of Claims : 20

(12) PATENT APPLICATION PUBLICATION
(21) Application No.2218/MUMNP/2014 A
(19) INDIA
(22) Date of filing of Application :04/11/2014
(43) Publication Date : 17/07/2015

(54) Title of the invention : SPARK PLUG WITH A DIODE FOR INTERNAL COMBUSTION ENGINES

(51) International classification :H01T13/02,H01T13/34
(31) Priority Document No :BR2020120105719
(32) Priority Date :04/05/2012
(33) Name of priority country :Brazil
(86) International Application No :PCT/BR2012/000465
Filing Date :21/11/2012
(87) International Publication No :WO 2013/163706
(61) Patent of Addition to Application Number :NA
Filing Date :NA
(62) Divisional to Application Number :NA
Filing Date :NA

(71)**Name of Applicant :**
**1)IKAT DO BRASIL COM. IMP. E EXPORTA‡ƒO LTDA**
Address of Applicant :Rua Guarar¡ 529 conjunto 18 Jardim Paulista CEP: 01425 001 S£o Paulo SP Brazil
(72)**Name of Inventor :**
**1)ORLEANS E BRAGAN‡A Luiz Philippe de**

(57) Abstract :
The present utility model patent application spark plug with a diode for internal combustion engines relates to a spark plug of the type having a diode located between the two parts of the core (3) said diode (2) being thus located inside the ceramic body (4) of the spark plug (1). The diode (2) improves the conduction of the electric current through the plug to the electrode (9). This spark plug differs from prior art spark plugs in that the diode unit (2) is mounted between two concave conical connectors (A) and (B) into one of which a spring (M) is incorporated thus allowing diodes (2) having different diameters and lengths to be mounted. The use of a tubular spacer (E) is optionally provided to allow the use of diodes (2) of different diameters and to keep the diode (2) in a correct position centred inside the opening in the ceramic insulator (4). The present utility model patent application further provides a diode (2 ) with two contact ends (C) at least one of which has the shape of a spring (M ).

No. of Pages : 15 No. of Claims : 3

(12) PATENT APPLICATION PUBLICATION
(21) Application No.2219/MUMNP/2014 A
(19) INDIA
(22) Date of filing of Application :04/11/2014
(43) Publication Date : 17/07/2015

(54) Title of the invention : ILLUMINATED ENDOSCOPIC PEDICLE PROBE WITH REPLACEABLE TIP

(51) International classification :A61B17/00
(31) Priority Document No :61/647747
(32) Priority Date :16/05/2012
(33) Name of priority country :U.S.A.
(86) International Application No :PCT/US2012/072175
Filing Date :28/12/2012
(87) International Publication No :WO 2013/172869
(61) Patent of Addition to Application Number :NA
Filing Date :NA
(62) Divisional to Application Number :NA
Filing Date :NA

(71)**Name of Applicant :**
**1)JACKSON Avery M. III**
Address of Applicant :4530 Warwick Circle Drive Grand Blanc MI 48439 U.S.A.
(72)**Name of Inventor :**
**1)JACKSON Avery M. III**

(57) Abstract :
An endoscopic pedicle probe for use during spinal surgery to form a hole in a pedicle for reception of a pedicle screw has an enlarged proximal end for cooperation with the hand of the surgeon and an elongate shaft terminating in a distal tip that may be pushed through the pedicle to form the hole. The tip may be detachable for replacement. An endoscope extends through the shaft and is connected with a monitor to enable the surgeon to visually observe the area being treated. In a preferred form a light means extends through the shaft to illuminate the area being treated and in a further preferred form a conduit extends through the shaft to convey a fluid to flush the area being treated. In a further embodiment two endoscopes are associated with the probe.

No. of Pages : 33 No. of Claims : 21

(12) PATENT APPLICATION PUBLICATION
(19) INDIA
(22) Date of filing of Application :04/11/2014
(21) Application No.2220/MUMNP/2014 A
(43) Publication Date : 17/07/2015

(54) Title of the invention : RESOLVING A SERVING GRANT DEADLOCK AT A MOBILE STATION CONFIGURED FOR ENHANCED|UPLINK (EUL)

(51) International classification :H04W72/12,H04W72/14,H04W28/06
(31) Priority Document No :61/659,689
(32) Priority Date :14/06/2012
(33) Name of priority country :U.S.A.
(86) International Application No :PCT/US2013/044907
Filing Date :10/06/2013
(87) International Publication No :WO 2013/188261
(61) Patent of Addition to Application Number :NA
Filing Date :NA
(62) Divisional to Application Number :NA
Filing Date :NA

(71)**Name of Applicant :**
**1)QUALCOMM INCORPORATED**
Address of Applicant :Attn: International IP Administration 5775 Morehouse Drive San Diego California 92121 U.S.A.
(72)**Name of Inventor :**
**1)ZHANG Yi**
**2)KANAMARLAPUDI Sitaramanjaneyulu**
**3)HSU Liangchi**
**4)HANDA Omesh Kumar**
**5)EL SAIDNY Mohamed A.**
**6)SHAH Chaitanya B.**

(57) Abstract :
A user equipment (UE) and a method of using the UE are provided for fulfilling a network s intent to increase or decrease the serving grant for the UE in spite of a deadlock condition that may otherwise prevent fulfillment of the network s intent. That is upon determining the network s intent the UE may alter its serving grant according the intent by altering the number of packets for transmission in a TTI. In a different embodiment the user equipment carries out a unilateral increase of a serving grant to include an additional packet in accordance with stored serving grant under utilization loss information since translation or quantization of a serving grant into a number of bits may result in truncation.

No. of Pages : 52 No. of Claims : 40

(12) PATENT APPLICATION PUBLICATION
(21) Application No.3078/MUM/2013 A
(19) INDIA
(22) Date of filing of Application :26/09/2013
(43) Publication Date : 17/07/2015

(54) Title of the invention : SYSTEM AND METHOD FOR PROVIDING END TO END BUSINESS PROCESS MAPS FOR PROCESS VISUALIZATION

| | |
|---|---|
| (51) International classification | :G06F3/04817, G06F3/0482 |
| (31) Priority Document No | :NA |
| (32) Priority Date | :NA |
| (33) Name of priority country | :NA |
| (86) International Application No | :NA |
| Filing Date | :NA |
| (87) International Publication No | : NA |
| (61) Patent of Addition to Application Number | :NA |
| Filing Date | :NA |
| (62) Divisional to Application Number | :NA |
| Filing Date | :NA |

(71)**Name of Applicant :**
**1)TATA CONSULTANCY SERVICES LIMITED**
Address of Applicant :NIRMAL BUILDING, 9TH FLOOR, NARIMAN POINT, MUMBAI 400021, MAHARASHTRA, INDIA
(72)**Name of Inventor :**
**1)DESHPANDE, AJAY ARVIND**
**2)GARG, APARNA S**

(57) Abstract :
The present disclosure relates to a system, method and a computer program product for providing an informative arrangement and visualization of process flow in a process map repository. The system and method facilitates in capturing attributes from one or more sources. The attributes captured are tagged to one or more predefined level for categorizing of one or more process flow models and the attributes. One or more logic rules are used by correlating the attributes with the predefined levels to generate the process flow models associated with one or more entities. An illustrative view of the process flow models is generated to illustrate an informative arrangement of the predefined levels in the process map repository.

No. of Pages : 29 No. of Claims : 11

(12) PATENT APPLICATION PUBLICATION
(21) Application No.3087/MUM/2013 A
(19) INDIA
(22) Date of filing of Application :27/09/2013
(43) Publication Date : 17/07/2015

(54) Title of the invention : AN IMPROVED PROCESS FOR PREPARATION OF CRYSTALLINE TICAGRELOR AND INTERMEDIATE THEREOF

| | | |
|---|---|---|
| (51) International classification | :C07D487/04 | (71)**Name of Applicant :** |
| (31) Priority Document No | :NA | **1)CADILA HEALTHCARE LIMITED** |
| (32) Priority Date | :NA | Address of Applicant :CADILA HEALTHCARE LIMITED |
| (33) Name of priority country | :NA | ZYDUS TOWER, SATELLITE CROSS ROADS |
| (86) International Application No | :NA | AHMEDABAD-380015 Gujarat India |
| Filing Date | :NA | (72)**Name of Inventor :** |
| (87) International Publication No | : NA | **1)DWIVEDI SHRIPRAKASH DHAR** |
| (61) Patent of Addition to Application Number | :NA | **2)PRASAD ASHOK** |
| Filing Date | :NA | **3)JAIN KULDEEP NATWARLAL** |
| (62) Divisional to Application Number | :NA | **4)PATEL NAITIK BHARATBHAI** |
| Filing Date | :NA | |

(57) Abstract :
The present invention providesa a process for the preparation of crystalline protected-triazole compound of Formula (II), the process comprising: (a) providing a solution of protected-triazole compound of Formula (II) in one or more of first organic solvents, (b) optionally, removing the first organic solvent completely or partially from the solution to obtain a residue; and (c) treating the solution of step a) or the residue of step b) with one or more second organic solvents to obtain the crystalline protected-triazole compound of Formula (II). (II)

No. of Pages : 28 No. of Claims : 10

(12) PATENT APPLICATION PUBLICATION
(21) Application No.3088/MUM/2013 A
(19) INDIA
(22) Date of filing of Application :27/09/2013
(43) Publication Date : 17/07/2015

(54) Title of the invention : AN IMPROVED PROCESS FOR PREPARATION OF TICAGRELOR AND INTERMEDIATES THEREOF

(51) International classification :C07D487/04
(31) Priority Document No :NA
(32) Priority Date :NA
(33) Name of priority country :NA
(86) International Application No :NA
Filing Date :NA
(87) International Publication No : NA
(61) Patent of Addition to Application Number :NA
Filing Date :NA
(62) Divisional to Application Number :NA
Filing Date :NA

(71)**Name of Applicant :**
**1)CADILA HEATLCARE LIMITED**
Address of Applicant :CADILA HEALTHCARE LIMITED ZYDUS TOWER, SATELLITE CROSS ROADS AHMEDABAD-380015 Gujarat India
(72)**Name of Inventor :**
**1)DWIVEDI SHRIPRAKASH DHAR**
**2)PRASAD ASHOK**
**3)JAIN KULDEEP NATWARLAL**
**4)PATEL NAITIK BHARATBHAI**

(57) Abstract :
The present invention provides a process for preparation of ticagrelor of Formula (I) and intermediates thereof. The present invention provides an improved process for preparation of condensed-nitro compound of Formula (V) and protected-triazole compound of Formula (II). The invention also provides a novel dimeric impurity and a process for its preparation. (I)

No. of Pages : 34 No. of Claims : 15

(12) PATENT APPLICATION PUBLICATION
(19) INDIA
(22) Date of filing of Application :27/09/2013
(21) Application No.3089/MUM/2013 A
(43) Publication Date : 17/07/2015

(54) Title of the invention : SYNTHESIS OF TRICLOPYR ACID

(51) International classification :C07D213/63
(31) Priority Document No :NA
(32) Priority Date :NA
(33) Name of priority country :NA
(86) International Application No :NA
Filing Date :NA
(87) International Publication No : NA
(61) Patent of Addition to Application Number :NA
Filing Date :NA
(62) Divisional to Application Number :NA
Filing Date :NA

(71)**Name of Applicant :**
**1)GHARDA CHEMICALS LTD.**
Address of Applicant :D-1/2, MIDC, LOTE PARSHURAM, TALUKA KHED, DISTRICT: RATNAGARI, MAHARASHTRA, INDIA.
(72)**Name of Inventor :**
**1)GHARDA KEKI HORMUSJI**
**2)SHET LAXMINARAYAN S**
**3)SHELAR APARNA**
**4)KHER DHIRAJ**
**5)PARTHE GIRISH**
**6)KEDARE SANDEEP**
**7)WARGHUDE SATISH**

(57) Abstract :
The present disclosure relates to a process for preparing a compound of Formula 1, Formula 1 from a compound of Formula 2, Formula 2 wherein, the substituents have the meaning as defined in the description. The process comprises a step of hydrolyzing the compound of Formula 2 in an acidic reaction medium, at a temperature ranging from 30 oC to 120 oC to obtain a reaction mass comprising the compound of Formula 1, less than 0.5% of the compound of Formula 2 and acid solution and isolating the compound of Formula 1 and the compound of Formula 2 from the reaction mass.

No. of Pages : 14 No. of Claims : 10

(12) PATENT APPLICATION PUBLICATION
(19) INDIA
(22) Date of filing of Application :27/09/2013
(21) Application No.3090/MUM/2013 A
(43) Publication Date : 17/07/2015

(54) Title of the invention : SYNTHESIS OF DELTAMETHRIC ACID

(51) International classification :C07C233/63
(31) Priority Document No :NA
(32) Priority Date :NA
(33) Name of priority country :NA
(86) International Application No :NA
Filing Date :NA
(87) International Publication No : NA
(61) Patent of Addition to Application Number :NA
Filing Date :NA
(62) Divisional to Application Number :NA
Filing Date :NA

(71)**Name of Applicant :**
**1)GHARDA CHEMICALS LTD.**
Address of Applicant :D-1/2, MIDC, LOTE PARSHURAM, TALUKA KHED, DISTRICT: RATNAGARI, MAHARASHTRA, INDIA.
(72)**Name of Inventor :**
**1)GHARDA KEKI HORMUSJI**
**2)SHET LAXMINARAYAN S**
**3)SAMANGADKAR YATIN**
**4)KAWADE ABHIJEET**
**5)CHAVAN ARUNA**
**6)GOGAVALE ASHISH**
**7)VIRKAR MANGESH**
**8)KADAM JYOTSNA**

(57) Abstract :
The present disclosure relates to a process for preparing a deltamethric acid. The process in accordance with the present disclosure comprises hydrolyzing cypermethric acid ester in the presence of an aqueous solution of a sulfur containing acid. The deltamethric acid is extracted after the complete hydrolysis of the ester, using a suitable solvent. A process uses inexpensive, readily available and non-toxic reagents for the preparation of deltamethric acid.

No. of Pages : 16 No. of Claims : 8

(12) PATENT APPLICATION PUBLICATION
(19) INDIA
(22) Date of filing of Application :27/09/2013
(21) Application No.3091/MUM/2013 A
(43) Publication Date : 17/07/2015

(54) Title of the invention : SYNTHESIS OF ANILOFOS

| | |
|---|---|
| (51) International classification | :A01N25/12, A01N57/14 |
| (31) Priority Document No | :NA |
| (32) Priority Date | :NA |
| (33) Name of priority country | :NA |
| (86) International Application No | :NA |
| Filing Date | :NA |
| (87) International Publication No | : NA |
| (61) Patent of Addition to Application Number | :NA |
| Filing Date | :NA |
| (62) Divisional to Application Number | :NA |
| Filing Date | :NA |

(71)**Name of Applicant :**
**1)GHARDA CHEMICALS LTD.**
Address of Applicant :D-1/2, MIDC, LOTE PARSHURAM, TALUKA KHED, DISTRICT: RATNAGARI MAHARASHTRA, INDIA.
(72)**Name of Inventor :**
**1)GHARDA KEKI HORMUSJI**
**2)SHET LAXMINARAYAN S**
**3)SAMANGADKAR YATIN**
**4)NAIDU ANIL L.**
**5)KAWADE ABHIJEET**
**6)CHAVAN ARUNA**
**7)SHELAR APARNA**
**8)GOGAVALE ASHISH**
**9)VIRKAR MANGESH**
**10)KADAM JYOTSNA**

(57) Abstract :
The present disclosure relates to a simple and cost effective process for preparing a anilofos and its analogues.

No. of Pages : 24 No. of Claims : 11

(12) PATENT APPLICATION PUBLICATION
(19) INDIA
(22) Date of filing of Application :27/09/2013
(21) Application No.3092/MUM/2013 A
(43) Publication Date : 17/07/2015

(54) Title of the invention : AN AIR INTAKE SYSTEM FOR FEEDING AIR TO THE ENGINE OF A VEHICLE

| | |
|---|---|
| (51) International classification | :F02M35/10,F02B75/22, F02M35/116 |
| (31) Priority Document No | :NA |
| (32) Priority Date | :NA |
| (33) Name of priority country | :NA |
| (86) International Application No | :NA |
| Filing Date | :NA |
| (87) International Publication No | : NA |
| (61) Patent of Addition to Application Number | :NA |
| Filing Date | :NA |
| (62) Divisional to Application Number | :NA |
| Filing Date | :NA |

(71)**Name of Applicant :**
**1)MAHINDRA AND MAHINDRA LIMITED**
Address of Applicant :MAHINDRA TOWERS, WORLI, MUMBAI 400 018, MAHARASHTRA, INDIA.
(72)**Name of Inventor :**
**1)MUURMALLA NITI KIRAN**
**2)PATIL SANJEEVGOUDA BASANAGOUDA**
**3)SHARMA SIDHARATH**
**4)KUMBHAR MANSINH SHAMRAO**

(57) Abstract :
An air intake system for feeding air to the engine of a vehicle, the system including an expansion chamber mounted inline between the air inlet of the system and the engine, the expansion chamber having a profiled wall defining a cavity having a varying cross section, an inlet and an outlet defined in the wall along parallel axes configured to permit ambient air to enter through the inlet, expand in the chamber and flow in a direction substantially parallel but in opposite direction of the direction of entry of the air into the expansion chamber and a conduit fitted between the outlet of the expansion chamber and inlet of the engine, a portion of the conduit distal from the expansion chamber outlet having a varying cross section.

No. of Pages : 35 No. of Claims : 7

(12) PATENT APPLICATION PUBLICATION
(19) INDIA
(22) Date of filing of Application :25/09/2013
(21) Application No.3070/MUM/2013 A
(43) Publication Date : 17/07/2015

(54) Title of the invention : PROCESS FOR PREPARATION OF DIMETHYL FUMARATE

(51) International classification :C07C69/74,A61K31/225
(31) Priority Document No :NA
(32) Priority Date :NA
(33) Name of priority country :NA
(86) International Application No :NA
Filing Date :NA
(87) International Publication No : NA
(61) Patent of Addition to Application Number :NA
Filing Date :NA
(62) Divisional to Application Number :NA
Filing Date :NA

(71)**Name of Applicant :**
**1)GLENMARK PHARMACEUTICALS LIMITED**
Address of Applicant :GLENMARK GENERICS LIMITED, GLENMARK HOUSE, HDO- CORPORATE BLDG, WING-A, B. D. SAWANT MARG, CHAKALA, ANDHERI (EAST), MUMBAI - 400099, Maharashtra India
(72)**Name of Inventor :**
**1)SHEKHAR BHASKAR BHIRUD**
**2)KUMAR HARI BHUSHAN**
**3)H M VEERABHADRA SWAMY**
**4)DILIPKUMAR JIBHAU PATIL**
**5)AVIKUMAR DIGAMBAR DABE**

(57) Abstract :
The present invention relates to a novel process for the preparation of dimethyl fumarate.

No. of Pages : 23 No. of Claims : 9

(12) PATENT APPLICATION PUBLICATION
(19) INDIA
(22) Date of filing of Application :25/09/2013
(21) Application No.3071/MUM/2013 A
(43) Publication Date : 17/07/2015

(54) Title of the invention : FOAM ENHANCER AND DISPENSER DEVICE FOR GENERAL CLEANING

| | |
|---|---|
| (51) International classification | :C11D1/12, C11D1/16 |
| (31) Priority Document No | :NA |
| (32) Priority Date | :NA |
| (33) Name of priority country | :NA |
| (86) International Application No | :NA |
| Filing Date | :NA |
| (87) International Publication No | : NA |
| (61) Patent of Addition to Application Number | :NA |
| Filing Date | :NA |
| (62) Divisional to Application Number | :NA |
| Filing Date | :NA |

(71)**Name of Applicant :**
**1)VISHRAM Y. ABHYANKAR**
Address of Applicant :A/302, AMEYA R.B.I. C.H.S., NEW PRABHADEVI ROAD, OPP. MARATHE UDYOG BHAWAN, PRABHADEVI, MUMBAI-400 025, M.S., INDIA.
(72)**Name of Inventor :**
**1)VISHRAM Y. ABHYANKAR**

(57) Abstract :
Foam enhancer and dispenser device, mechanism for general cleaning, relates the device for general propose cleaning or utensils manual cleaning. It saves detergent, water for cleaning purpose without compromising the quality, and gives output in the form of foam and lather for cleaning. Its a pre foam making device by manually squeezing or pumping the material, having container at outermost hosing, with squeezable, pores, material, having Liquid Soaking and holding properties with optional embodiments like springs, cover, and filters. Manually squeezing or pumping of, water and detergent mixture socked material gives the maximum output with minimum or desirable input, as foam and lather can be collect and use for cleaning purpose.

No. of Pages : 9 No. of Claims : 3

(12) PATENT APPLICATION PUBLICATION
(21) Application No.3074/MUM/2013 A
(19) INDIA
(22) Date of filing of Application :26/09/2013
(43) Publication Date : 17/07/2015

(54) Title of the invention : A LOCKING CYLINDER ASSEMBLY FOR PIN TUMBLER LOCK

| | |
|---|---|
| (51) International classification | :E05B27/00, E05B9/04 |
| (31) Priority Document No | :NA |
| (32) Priority Date | :NA |
| (33) Name of priority country | :NA |
| (86) International Application No | :NA |
| Filing Date | :NA |
| (87) International Publication No | : NA |
| (61) Patent of Addition to Application Number | :NA |
| Filing Date | :NA |
| (62) Divisional to Application Number | :NA |
| Filing Date | :NA |

(71)**Name of Applicant :**
**1)GODREJ & BOYCE MFG. CO. LTD.**
Address of Applicant :LOCKS DIVISION (PLANT-18) PIROJSHANAGAR, VIKHROLI, MUMBAI - 400 079 MAHARASHTRA, INDIA
(72)**Name of Inventor :**
**1)THOTTUVAI SIVASUBRAMANI MURALI**

(57) Abstract :
Present invention provides a locking cylinder assembly for pin tumbler lock comprising a locking cylinder (2), a locking cylinder housing (1), a wedge (6) and a sleeve (8). The locking cylinder (2) comprises two rows of plurality of holes (2b, 2c), the rows being situated at angle of 180 degree apart from each other and an elongated slot (2a) to slidably receive the key (7). The locking cylinder housing (1) accommodates the locking cylinder (2). The locking cylinder housing (1) comprises four rows (la, lb, lc, 1d) of plurality of holes, the rows being situated at angle of 90 degree from each other and a cylindrical opening (le) to receive the locking cylinder (2). A plurality of operating pins (3a, 3d) are provided which are accommodated inside the plurality of holes of two rows (2b, 2c) of locking cylinder. Further a plurality of driver pins (5a, 5b, 5c, 5d) and associated driver springs (4a, 4b, 4c, 4d) are provided which are accommodated inside the plurality of holes of four rows (la, lb, lc, 1d) of locking cylinder housing. The sleeve (8) is adapted to receive locking cylinder housing (1). The sleeve comprises a hole (8a) to enable receiving of the locking cylinder housing (1). The key (7) having dimples (7a) over the surface. According to present invention upon insertion of the key (7) in locking cylinder (2), the operating pins (3a, 3d) get align with dimples (7a) on the key thereby adjusting driver pins (5a, 5d) and driver springs (4a, 4d) and allows to rotate the locking cylinder (2) and when the locking cylinder (2) rotated by 90 degree, the operating pins (3a, 3d) come in contact with driver pins (5b, 5c) and align with dimples (7a) on key such that key (7) can be take out at 90 degree.

No. of Pages : 15 No. of Claims : 3

(12) PATENT APPLICATION PUBLICATION
(19) INDIA
(22) Date of filing of Application :26/09/2013
(21) Application No.3076/MUM/2013 A
(43) Publication Date : 17/07/2015

(54) Title of the invention : A PROCESS FOR THE POLYMERIZATION OF AN OLEFIN USING A HETEROGENEOUS ZIEGLER-NATTA CATALYST SYSTEM

| | |
|---|---|
| (51) International classification | :C08F2/00, C08F110/14 |
| (31) Priority Document No | :NA |
| (32) Priority Date | :NA |
| (33) Name of priority country | :NA |
| (86) International Application No | :NA |
| Filing Date | :NA |
| (87) International Publication No | : NA |
| (61) Patent of Addition to Application Number | :NA |
| Filing Date | :NA |
| (62) Divisional to Application Number | :3737/MUM/2012 |
| Filed on | :31/12/2012 |

(71)**Name of Applicant :**
**1)RELIANCE INDUSTRIES LIMITED**
Address of Applicant :3RD FLOOR, MAKER CHAMBER-IV 222, NARIMAN POINT, MUMBAI-400021, MAHARASHTRA, INDIA
(72)**Name of Inventor :**
**1)SARMA KRISHNA RENGANATH**
**2)PATIL YOGESH**
**3)PATEL VIRALKUMAR**
**4)BAGUI MAHUYA**
**5)MATHUR AJIT BEHARI**
**6)JASRA RAKSH VIR**
**7)VAKIL SUKETU**
**8)SATPATHY UMA SANKAR**
**9)GANDHAM SATYA SRINIVASA RAO**

(57) Abstract :
The present disclosure relates to a process for the preparation of an ultra-high molecular weight (UHMW) polyolefin using aged Ziegler Natta catalyst system. The polyolefin prepared in accordance with the process of the present disclosure is characterized by a molecular weight ranging between 3 and 13 million g/ mole, a bulk density ranging between 0.1 and 0.36 g/cc, an average particle size ranging between 150 and 250 microns, a molecular weight distribution ranging between 7and 12; and a crystallinity ranging between 55 and 60%.

No. of Pages : 29 No. of Claims : 13

(12) PATENT APPLICATION PUBLICATION
(21) Application No.2226/MUMNP/2014 A
(19) INDIA
(22) Date of filing of Application :04/11/2014
(43) Publication Date : 17/07/2015

(54) Title of the invention : MEASURING APPARATUS AND METHOD FOR DETECTING THE HYDROCARBON FRACTION IN GASES WHILE TAKING INTO ACCOUNT CROSS SENSITIVITIES

(51) International classification :G01N33/00,G01N33/497
(31) Priority Document No :10 2012 010 613.0
(32) Priority Date :30/05/2012
(33) Name of priority country :Germany
(86) International Application No :PCT/EP2013/061130
Filing Date :29/05/2013
(87) International Publication No :WO 2013/178714
(61) Patent of Addition to Application Number :NA
Filing Date :NA
(62) Divisional to Application Number :NA
Filing Date :NA

(71)**Name of Applicant :**
**1)BEKO TECHNOLOGIES GMBH**
Address of Applicant :Im Taubental 7 41468 Neuss Germany
(72)**Name of Inventor :**
**1)FRIEDRICH Martin**

(57) Abstract :
The invention relates to a measuring apparatus (20) for determining a measured value in a gas flow while taking into account cross sensitivities of the measuring appliance due to at least one additional constituent in the gas flow that interferes with the measured value of the measured gas. The measuring apparatus has a device for dividing an original gas flow (26) to be measured into a first measured gas flow (38) and a second measured gas flow (39) a device for changing the content of measured gas in the second measured gas flow (39) by changing an influencing variable that influences the content of the measured gas a sensor element (22) having a sensor for determining the measured value an evaluating unit for evaluating the measured values wherein the first measured gas flow (38) and the changed second measured gas flow (39) are alternately fed to the sensor element (22) in order to determine a first intermediate measured value in the first measured gas flow (38) and to determine an intermediate measured value in the second measured gas flow (39) and the evaluating unit calculates the final measured value on the basis of the two intermediate measurement results. The invention further relates to a corresponding method for determining a measured value in a gas flow.

No. of Pages : 22 No. of Claims : 16

(12) PATENT APPLICATION PUBLICATION
(19) INDIA
(22) Date of filing of Application :04/11/2014
(21) Application No.2227/MUMNP/2014 A
(43) Publication Date : 17/07/2015

(54) Title of the invention : IMPROVED SCREW TYPE POSITIVE DISPLACEMENT MACHINE

(51) International classification :F04C18/16,F04C29/04,F01C17/02
(31) Priority Document No :PCT/EP2012/059876
(32) Priority Date :25/05/2012
(33) Name of priority country :EPO
(86) International Application No :PCT/EP2013/060887
Filing Date :27/05/2013
(87) International Publication No :WO 2013/175019
(61) Patent of Addition to Application Number :NA
Filing Date :NA
(62) Divisional to Application Number :NA
Filing Date :NA

(71)**Name of Applicant :**
**1)ATELIERS BUSCH SA**
Address of Applicant :Rue des Moissons Zone Industrielle CH 2906 Chevenez Switzerland
(72)**Name of Inventor :**
**1)MLLER Didier**
**2)ILTCHEV Thodore**

(57) Abstract :
This invention relates to a screw type positive displacement machine (1) comprising a housing (2) with a first rotor (3 ) and a second rotor (3 ) which are mounted to rotate in the housing (2) and which are driven in directions which are the opposite of one another the positive displacement machine (1) comprising a first motor (4 ) and a second motor (4 ) which are arranged in a drive casing (5) and which are connected to the housing (2) in such a way that the first rotor (3 ) is driven by the first motor (4 ) and the second rotor (3 ) is driven by the second motor (4 ). Typically the first motor (4 ) and/or the second motor (4 ) is an asynchronous motor.

No. of Pages : 15 No. of Claims : 11

(12) PATENT APPLICATION PUBLICATION
(19) INDIA
(22) Date of filing of Application :05/11/2014
(21) Application No.2228/MUMNP/2014 A
(43) Publication Date : 17/07/2015

(54) Title of the invention : INHIBITOR OF JAK1 AND JAK2

(51) International classification :A61K31/4155,A61P35/00,C07D471/04
(31) Priority Document No :61/659,679
(32) Priority Date :14/06/2012
(33) Name of priority country :U.S.A.
(86) International Application No :PCT/US2013/044211
Filing Date :05/06/2013
(87) International Publication No :WO 2013/188184
(61) Patent of Addition to Application Number :NA
Filing Date :NA
(62) Divisional to Application Number :NA
Filing Date :NA

(71)**Name of Applicant :**
**1)ELI LILLY AND COMPANY**
Address of Applicant :Lilly Corporate Center Indianapolis Indiana 46285 U.S.A.
(72)**Name of Inventor :**
**1)BURKHOLDER Timothy Paul**
**2)CLAYTON Joshua Ryan**

(57) Abstract :
The present invention provides an amino pyrazole compound which is 3 [(lR) 6 fluoro 2 3 dihydro 1H inden l yl] N (3 methyl IH pyrazol 5 yl) 3H imidazo[4 5 b]pyridin 5 amine or a pharmaceutically acceptable salt thereof that inhibits JAK1 and JAK2 and therefore may be useful in treating cancer.

No. of Pages : 27 No. of Claims : 9

(12) PATENT APPLICATION PUBLICATION
(21) Application No.3121/MUM/2013 A
(19) INDIA
(22) Date of filing of Application :30/09/2013
(43) Publication Date : 17/07/2015

(54) Title of the invention : AN AMORPHOUS VORTIOXETINE AND SALTS THEREOF

(51) International classification :C07D295/096
(31) Priority Document No :NA
(32) Priority Date :NA
(33) Name of priority country :NA
(86) International Application No :NA
Filing Date :NA
(87) International Publication No : NA
(61) Patent of Addition to Application Number :NA
Filing Date :NA
(62) Divisional to Application Number :NA
Filing Date :NA

(71)**Name of Applicant :**
**1)CADILA HEALTHCARE LIMITED**
Address of Applicant :Zydus Tower, Satellite Cross Road, Ahmedabad 380 015, Gujarat, India,
(72)**Name of Inventor :**
**1)DWIVEDI Shri Prakash Dhar**
**2)KHERA Brij**

(57) Abstract :
The present invention relates to an amorphous vortioxetine and salts thereof. In particular, the invention relates to a process for the preparation of an amorphous vortioxetine hydrobromide. Further, the invention also relates to a process for preparation of amorphous vortioxetine free base. The invention also relates topharmaceutical compositions comprising an amorphous vortioxetine or hydrobromide salt thereof for oral administration for treatment of major depressive disorder (MDD) and generalized anxiety disorder (GAD).

No. of Pages : 26 No. of Claims : 23

(12) PATENT APPLICATION PUBLICATION
(19) INDIA
(22) Date of filing of Application :30/09/2013
(21) Application No.3112/MUM/2013 A
(43) Publication Date : 17/07/2015

(54) Title of the invention : A PORTABLE SYSTEM FOR SIMULATING ARC WELDING

(51) International classification :G09B19/24
(31) Priority Document No :NA
(32) Priority Date :NA
(33) Name of priority country :NA
(86) International Application No :NA
Filing Date :NA
(87) International Publication No : NA
(61) Patent of Addition to Application Number :NA
Filing Date :NA
(62) Divisional to Application Number :NA
Filing Date :NA

(71)**Name of Applicant :**
**1)TATA CONSULTANCY SERVICES LTD**
Address of Applicant :NIRMAL BUILDING, 9TH FLOOR, NARIMAN POINT, MUMBAI - 400021, MAHARASHTRA, INDIA
(72)**Name of Inventor :**
**1)V. MURALITHARAN**
**2)SRINIVASAN, RAMAN**
**3)S. IRFAN BASHA**
**4)PALANIMUTHU, VIGNESH**
**5)CHIDERAE, RAJA SEKHAR**
**6)SRINIVASAN, SWARNA**

(57) Abstract :
A portable, low cost, safe and simple system is provided for simulating arc welding that makes training in welding technology motivating and interesting for a target semi-literate user. The system comprises a simulated welding torch including a simulated consumable welding rod in the form of an elongated threaded rod that serves as a rack. A reversible stepper motor serves as a pinion and engages with the rod to cause movement of the rod towards or away from a work piece. Two cameras in the simulated work space measures welding parameters including location of the tip relative to the simulated job. A computer generates control signals based on the measured parameters to control the stepper motor to drive the welding rod towards the work piece at the beginning of the simulated weld process and away from the work piece during the simulated weld process to simulate consumption of the welding rod.

No. of Pages : 26 No. of Claims : 13

(12) PATENT APPLICATION PUBLICATION
(21) Application No.3113/MUM/2013 A
(19) INDIA
(22) Date of filing of Application :30/09/2013
(43) Publication Date : 17/07/2015

(54) Title of the invention : A NOVEL PROCESS FOR PREPARING PEROVSKITE CATALYSTS BY REACTIVE GRINDING

| | |
|---|---|
| (51) International classification | :B01J23/00, B01J23/58 |
| (31) Priority Document No | :NA |
| (32) Priority Date | :NA |
| (33) Name of priority country | :NA |
| (86) International Application No | :NA |
| Filing Date | :NA |
| (87) International Publication No | : NA |
| (61) Patent of Addition to Application Number | :NA |
| Filing Date | :NA |
| (62) Divisional to Application Number | :NA |
| Filing Date | :NA |

(71)**Name of Applicant :**
**1)INSTITUTE OF TECHNOLOGY, NIRMA UNIVERSITY**
Address of Applicant :Sarkhej Gandhinagar Highway Ahmedabad, Gujarat, INDIA
(72)**Name of Inventor :**
**1)PATEL, Femina J**
**2)PATEL, Sanjay S.**

(57) Abstract :
The present invention provides a novel process for preparing perovskite catalysts by reactive grinding using an improved planetary ball mill designed and fabricated indigenously as disclosed in our patent application number 2521/MUM/2013. The present invention provides a novel process for preparing perovskite wherein the mixture of said salt precursor or oxide mixed in stoichiometric ratio and the Stainless Steel Balls (2F) are loaded into said Jar (2A) of said Improved Planetary Ball Mill (1) and the said Jar (2A) is closed with the Jar Cover (2B) with Lock (2C) and O-ring (2D) and are intensely milled with speed of revolution of said Sun Wheel (3A) at 200 rpm in anti clock wise direction and the speed of rotation of said Jars (2A) at 350 rpm in clock wise direction for 5 to15 h.

No. of Pages : 37 No. of Claims : 6

(12) PATENT APPLICATION PUBLICATION
(19) INDIA
(22) Date of filing of Application :30/09/2013
(21) Application No.3115/MUM/2013 A
(43) Publication Date : 17/07/2015

(54) Title of the invention : MASALA PASTE

| | |
|---|---|
| (51) International classification | :A23L1/212, A23L1/22 |
| (31) Priority Document No | :NA |
| (32) Priority Date | :NA |
| (33) Name of priority country | :NA |
| (86) International Application No | :NA |
| Filing Date | :NA |
| (87) International Publication No | : NA |
| (61) Patent of Addition to Application Number | :NA |
| Filing Date | :NA |
| (62) Divisional to Application Number | :1166/MUM/2010 |
| Filed on | :07/04/2010 |

(71)**Name of Applicant :**
**1)AMITA NILESH VAZE**
Address of Applicant :HOUSE NO. 718, MORESHWAR BAUG, VARACHI PAKHADI MURUD, TAL. DAPOLI, DIST, RATNAGIRI Maharashtra India
(72)**Name of Inventor :**
**1)AMITA NILESH VAZE**

(57) Abstract :
A masala paste comprising: Green Chillies 20% to 30% Ginger 13% to 22% Garlic 13% to 22% Curry leaves 0.66% to 2% Onion 12% to 25% Musturd Seeds 0.9% to 1.09% Cumin seeds 0.4% to 1.09% Turmeric Powder 0.54% to 1.09% Salt 8.61% to 10% Oil 25% to 38%

No. of Pages : 6 No. of Claims : 3

(12) PATENT APPLICATION PUBLICATION
(21) Application No.3116/MUM/2013 A
(19) INDIA
(22) Date of filing of Application :30/09/2013
(43) Publication Date : 17/07/2015

(54) Title of the invention : A PROCESS FOR PREPARATION OF MIRABEGRON AND ALPHA CRYSTALLINE FORM THEREOF

(51) International classification :C07D277/40
(31) Priority Document No :NA
(32) Priority Date :NA
(33) Name of priority country :NA
(86) International Application No :NA
Filing Date :NA
(87) International Publication No : NA
(61) Patent of Addition to Application Number :NA
Filing Date :NA
(62) Divisional to Application Number :NA
Filing Date :NA

(71)**Name of Applicant :**
**1)MEGAFINE PHARMA (P) LTD.**
Address of Applicant :4TH FLOOR, SETHNA, 55, MAHARSHI KARVE ROAD, MARINE LINES, MUMBAI - 400 002, MAHARASHTRA, INDIA.
(72)**Name of Inventor :**
**1)MATHAD VIJAYAVITTHAL THIPPANNACHAR**
**2)DESHMUKH DATTATRAY GULABRAO**
**3)VARPE SAGAR POPAT**

(57) Abstract :
An improved process for the preparation of Mirabegron of formula (I) where 4-nitrophenylethylamine of formula (III) or its acid addition salt of formula (IIIa) reacted with compound of formula (XII) in a solvent, optionally in presence of base and/or catalyst to obtain (R)-2-hydroxy-N-[2-(4-nitrophenyl)ethyl]-2-phenylacetamide of formula (XIII) followed by reducing (R)-2-hydroxyN-[2-(4-nitrophenyl)ethyl]-2-phenylacetamide of formula (XIII) in a solvent to obtain (R)-2-[2-(4-nitrophenyl)ethyl]amino]-l-phenylethanol of formula (XIV), optionally converting it into its acid addition salt of formula (XlVa); reducing (-P-nitrophenyOethyijamino]-l-phenylethanol of formula (XIV) or its acid addition salt of formula (XIVa) further in solvent to obtain (#)-2-[[2-(4-aminophenyl)ethyl]-amino]-l-phenylethanol of formula (XV) or its acid addition salt of formula (XVa) respectively; and reacting compound (R)-2-[[2-(4-aminophenyl)ethyl]-amino]I-phenylethanol of formula (XV) or its acid addition salt of compound of formula (XVa) with compound of formula (VII) in solvent, optionally in the presence of acid, and/or a catalyst to obtain Mirabegron of formula (I) which is further isolated as its a- crystalline form. The compound of formula (XIV) used in the foregoing process can also be prepared by reacting with a compound of formula (III) or acid addition salt of compound of formula (IIIa) in presence of a solvent, a catalyst and optionally in presence of a base to obtain compound of formula (XIV) optionally converting it into its acid addition salt of formula (XlVa); and the same is used in the above-referred process. The compound of formula (XV) used in the foregoing process can also be prepared by reacting a compound of formula (III) or its acid addition salt of formula (Ilia) with a compound of formula (XVI) in a solvent, optionally in presence of a base, optionally in presence of a catalyst to obtain compound of formula (XVII); and optionally isolate the compound of formula (XVII) followed by reducing the compound of formula (XVII) using reducing agent, in a solvent, optionally in presence of a base, optionally in presence of a catalyst to obtain compound of formula (XV) which is further used in the above-referred process for the preparation of Mirabegron of formula (I) and its a-crystalline form. Another additional single-pot process for preparation of Mirabegron of formula (I) is disclosed, wherein compound of formula (XV) or its acid addition salt of formula (XVa) reacted with compound of formula (XVIII) in presence of a solvent and oxidizing agent, optionally in presence of base, optionally in presence of a catalyst to obtain Mirabegron of formula (I).

No. of Pages : 51 No. of Claims : 45

(12) PATENT APPLICATION PUBLICATION
(19) INDIA
(22) Date of filing of Application :09/12/2014
(21) Application No.2499/MUMNP/2014 A
(43) Publication Date : 17/07/2015

(54) Title of the invention : A METHOD OF DISPLAYING A CUSTOMISED ADDRESS BAR OR SEARCH RESULTS IN A BROWSER

(51) International classification :G06F17/30
(31) Priority Document No :2012901893
(32) Priority Date :09/05/2012
(33) Name of priority country :Australia
(86) International Application No :PCT/AU2013/000471
Filing Date :08/05/2013
(87) International Publication No :WO 2013/166549
(61) Patent of Addition to Application Number :NA
Filing Date :NA
(62) Divisional to Application Number :NA
Filing Date :NA

(71)**Name of Applicant :**
**1)ICON IP TECHNOLOGIES PTY LTD**
Address of Applicant :268 Domain Road South Yarra VIC 3141 Australia
(72)**Name of Inventor :**
**1)NELSON Paul Damian**

(57) Abstract :
Disclosed is a method of displaying a customised location bar or tab in a browser comprising: sending a request for content from a browser to a web server associated with a uniform resource locator (URL) entered into the browser; receiving the requested content from the web server at the browser; sending a request for custom domain data from the browser to a domain registration service the request for custom domain data comprising information indicative of at least a portion of the URL; receiving custom domain data from the domain registration service at the browser if at least a portion of the URL is registered with the domain registration service; and controlling the appearance of the contents of the location bar or tab in accordance with the received custom domain data. A method for similarly displaying customised search results and associated systems are also disclosed.

No. of Pages : 71 No. of Claims : 33

(12) PATENT APPLICATION PUBLICATION
(19) INDIA
(22) Date of filing of Application :15/10/2013
(21) Application No.3243/MUM/2013 A
(43) Publication Date : 17/07/2015

(54) Title of the invention : SYSTEM(S) AND METHOD(S) FOR SERVICE MODELING

| | |
|---|---|
| (51) International classification | :G06F7/60, G06F17/10 |
| (31) Priority Document No | :NA |
| (32) Priority Date | :NA |
| (33) Name of priority country | :NA |
| (86) International Application No | :NA |
| Filing Date | :NA |
| (87) International Publication No | : NA |
| (61) Patent of Addition to Application Number | :NA |
| Filing Date | :NA |
| (62) Divisional to Application Number | :NA |
| Filing Date | :NA |

(71)**Name of Applicant :**
**1)TATA CONSULTANCY SERVICES LIMITED**
Address of Applicant :NIRMAL BUILDING, 9TH FLOOR, NARIMAN POINT, MUMBAI 400021, MAHARASHTRA, INDIA
(72)**Name of Inventor :**
**1)PATHAK, AMRISH SHASHIKANT**
**2)INAMDAR, ADWAIT**

(57) Abstract :
Disclosed is method and system for modeling and executing service operation associated with technical service. Method comprises modeling of knowledge required for execution of service operation by representing factual knowledge and actionable knowledge in executable form. Modeling comprises representing standard operators and service operation. Service operation comprises parameters and rules presented in form of list of predicate-action pairs. Predicate-action pair comprises predicate and action. Predicate defines condition to be verified to comply with rule, and action specifies standard operator to be executed based on verification of condition. Method further comprises execution of service operation. Execution of service operation comprises selecting each predicate-action pair from list of predicate-action pairs and supplying subset of parameters to predicate of each predicate-action pair, verifying condition using subset of parameters, selecting standard operator based on verification of condition, supplying subset of parameters to standard operator, executing the standard operator by using subset of parameters.

No. of Pages : 59 No. of Claims : 22

(12) PATENT APPLICATION PUBLICATION
(21) Application No.3249/MUM/2013 A
(19) INDIA
(22) Date of filing of Application :16/10/2013
(43) Publication Date : 17/07/2015

(54) Title of the invention : A 3 DIRECTIONAL ROTARY SEAL FOR FLUID HANDLING MACHINES

| | |
|---|---|
| (51) International classification | :F04D15/00, F01C1/00 |
| (31) Priority Document No | :NA |
| (32) Priority Date | :NA |
| (33) Name of priority country | :NA |
| (86) International Application No | :NA |
| Filing Date | :NA |
| (87) International Publication No | : NA |
| (61) Patent of Addition to Application Number | :NA |
| Filing Date | :NA |
| (62) Divisional to Application Number | :NA |
| Filing Date | :NA |

(71)**Name of Applicant :**
**1)Kamath, Das Ajee**
Address of Applicant :Bungalow No. 48, Tata Motors Senior Officers Colony, Pimpri, Pune - 411018, Maharashtra India
(72)**Name of Inventor :**
**1)Kamath, Das Ajee**

(57) Abstract :
A rotary seal (10) for a fluid handling machine comprising, a first circular body (12) with a circumferential surface (28) that has an inclination to the central axis of said first circular body (12) and a second circular body (16) with a similar surface (27) that is inclined to the central axis of said second circular body (16) such that said second circular body (16) when assembled with said first circular body (12) coaxially, said circumferential surface (28) and said similar surface (27) mate with each other forming a sealing surface contact, wherein said first circular body (12) and said second circular body (16) is mounted on said fluid handling machine that constitute a rotor part (30) and a stator part (36), such that an internal end face (33) of said rotary seal (10) when assembled on fluid handling machine is exposed to fluids handled by said fluid handling machine, wherein said inclination is such that the fluid pressure on said internal end face (33) adds to the contact force at said sealing contact surface, wherein said first circular body (12) is continuous and said second circular body (16) has a split (17) and said second circular body (16) has a spring characteristic such that the two ends formed by the split (17), force away from each other, hence exerting a radial force on said circumferential surface when assembled with said first circular body (12) and compensating for circumferential wear during operation, wherein said second circular body (16), includes an inclined surface (29) that results in exerting an axial force on said rotor part (30) of said fluid handling machine on which said second circular body (16) is mounted on, by an external spring (32) on an external end face (31), wherein said second circular body (16) exerts a combination of axial, radial and tangential forces on said circumferential surface (28) which results in the force closure at said sealing surface contact, such that said rotary seal (10) does not require complete shrouding of said internal end face (33) and the edge of said sealing surface contact, from fluid within the casing during operation.

No. of Pages : 15 No. of Claims : 9

(12) PATENT APPLICATION PUBLICATION
(19) INDIA
(22) Date of filing of Application :26/09/2013
(21) Application No.3015/MUM/2013 A
(43) Publication Date : 17/07/2015

(54) Title of the invention : COMPOUNDS FOR INHIBITION OF UNREGULATED CELL GROWTH

| | |
|---|---|
| (51) International classification | :A61K31/40, a61k31/519 |
| (31) Priority Document No | :NA |
| (32) Priority Date | :NA |
| (33) Name of priority country | :NA |
| (86) International Application No | :NA |
| Filing Date | :NA |
| (87) International Publication No | : NA |
| (61) Patent of Addition to Application Number | :NA |
| Filing Date | :NA |
| (62) Divisional to Application Number | :NA |
| Filing Date | :NA |

(71)**Name of Applicant :**
**1)GODAVARI BIOREFINERIES LTD.**
Address of Applicant :SOMAIYA BHAVAN, 45-47, MAHATMA GANDHI ROAD, POST BOX NO. 384, FORT, MUMBAI- 400 001, MAHARASHTRA, INDIA
(72)**Name of Inventor :**
**1)KAILAS PANGAVHANE**
**2)MAITHILI ATHAVALE**

(57) Abstract :
Title.: Compounds For Inhibition Of Unregulated Cell Growth The present invention relates to compounds of Formula I for inhibition or eradication of unregulated cell growth.

No. of Pages : 37 No. of Claims : 12

(12) PATENT APPLICATION PUBLICATION
(21) Application No.3272/MUM/2013 A
(19) INDIA
(22) Date of filing of Application :18/10/2013
(43) Publication Date : 17/07/2015

(54) Title of the invention : POLYMERIZATION OF HYDROCARBONS

(51) International classification :C08F210/12
(31) Priority Document No :NA
(32) Priority Date :NA
(33) Name of priority country :NA
(86) International Application No :NA
Filing Date :NA
(87) International Publication No : NA
(61) Patent of Addition to Application Number :NA
Filing Date :NA
(62) Divisional to Application Number :
Filed on :01/01/1900

(71)**Name of Applicant :**
**1)RELIANCE INDUSTRIES LIMITED**
Address of Applicant :3RD FLOOR, MAKER CHAMBER - IV 222, NARIMAN POINT, MUMBAI - 400021 MAHARASHTRA, INDIA.
(72)**Name of Inventor :**
**1)JASRA RAKSHVIR**
**2)INGLE NINAD DEEPAK**
**3)KAPADIA PRADEEP PARESH**
**4)MUNSHI PRADEEP**

(57) Abstract :
The present disclosure relates to a process for the polymerization of hydrocarbons. In accordance with the process of the present disclosure a hydrocarbon and a photo- initiator is introduced in a reaction vessel and then agitated for a predetermined time period. In the next step, the reaction vessel containing agitating hydrocarbon and the photo- initiator is irradiated with a visible light in presence of inert atmosphere to obtain a polymerized hydrocarbon.

No. of Pages : 16 No. of Claims : 18

(12) PATENT APPLICATION PUBLICATION
(19) INDIA
(22) Date of filing of Application :18/10/2013
(21) Application No.3273/MUM/2013 A
(43) Publication Date : 17/07/2015

(54) Title of the invention : AIR-COOLED VAPOR ABSORPTION MACHINE

| | |
|---|---|
| (51) International classification | :F25B 15/00, F02C6/00 |
| (31) Priority Document No | :NA |
| (32) Priority Date | :NA |
| (33) Name of priority country | :NA |
| (86) International Application No | :NA |
| Filing Date | :NA |
| (87) International Publication No | : NA |
| (61) Patent of Addition to Application Number | :NA |
| Filing Date | :NA |
| (62) Divisional to Application Number | : |
| Filed on | :01/01/1900 |

(71)**Name of Applicant :**
**1)THERMAX LIMITED**
Address of Applicant :D - 13, MIDC, R.D. AGA ROAD, CHINCHWAD, PUNE - 411 019, MAHARASHTRA, INDIA.
(72)**Name of Inventor :**
**1)DUBAL, VILASRAO**
**2)NAVALE DEVADATTA**
**3)DESAI RAGHAVENDRA**
**4)KULKARNI SAMEER**

(57) Abstract :
An air cooled vapor absorption system includes an evaporator, an absorber, a condenser and a low temperature generator. The evaporator evaporates liquid refrigerant to generate vapors and extract heat from environment. The absorber having absorber tubes receives refrigerant vapors that are absorbed in a strong absorbent solution. The condenser condenses the refrigerant vapors. The condenser is having operatively vertically arranged condenser tubes. The low temperature generator is coupled to condenser and separates the refrigerant from dilute absorbent and directs refrigerant to the condenser and the absorbent to the absorber. The low temperature generator is disposed inside the operative top header. The absorber tubes and the condenser tubes are part of the same heat exchanger and are connected to a common top and bottom header to form a closed arrangement of absorber and condenser tubes around the common fan and are separated by a partition plate.

No. of Pages : 30 No. of Claims : 9

(12) PATENT APPLICATION PUBLICATION
(19) INDIA
(22) Date of filing of Application :18/10/2013
(21) Application No.3276/MUM/2013 A
(43) Publication Date : 17/07/2015

(54) Title of the invention : LIFT AXLE CONTROL MODULE

(51) International classification :F15B13/04,B62D61/12
(31) Priority Document No :NA
(32) Priority Date :NA
(33) Name of priority country :NA
(86) International Application No :NA
Filing Date :NA
(87) International Publication No : NA
(61) Patent of Addition to Application Number :NA
Filing Date :NA
(62) Divisional to Application Number :NA
Filing Date :NA

(71)**Name of Applicant :**
**1)KNORR-BREMSE Systems for Commercial Vehicles India Pvt Ltd**
Address of Applicant :Survey No.276, Hissa No.1, Village Mann, Taluka Mulshi, District Pune 411 057 Maharashtra India
(72)**Name of Inventor :**
**1)PATIL, Jaychandra**
**2)SONAR, Sachin**
**3)SHAHAPURE, Mahesh**

(57) Abstract :
The present disclosure relates to a lift axle control module (LACM) that can extremely efficiently support the functionality of a lift axle system while being capable of being operatively coupled on any vehicle having a fluid (gas or liquid) operated lift axle system. LACM of the present disclosure can comprise a single unit with all individual elements, which would previously function individually, integrated into a single module, thereby providing a system that is highly reliable, low in cost, compact, and efficient.

No. of Pages : 30 No. of Claims : 22

(12) PATENT APPLICATION PUBLICATION
(21) Application No.3278/MUM/2013 A
(19) INDIA
(22) Date of filing of Application :18/10/2013
(43) Publication Date : 17/07/2015

(54) Title of the invention : A MULTIPLE VANE ROTO-DYNAMIC VARIABLE DISPLACEMENT KINETIC SYSTEM

| | |
|---|---|
| (51) International classification | :F02C9/56, F04D29/44, F04D29/42 |
| (31) Priority Document No | :NA |
| (32) Priority Date | :NA |
| (33) Name of priority country | :NA |
| (86) International Application No | :NA |
| Filing Date | :NA |
| (87) International Publication No | : NA |
| (61) Patent of Addition to Application Number | :NA |
| Filing Date | :NA |
| (62) Divisional to Application Number | :NA |
| Filing Date | :NA |

(71)**Name of Applicant :**
**1)Kamath, Das Ajee**
Address of Applicant :Bungalow No. 48, Tata Motors Senior Officers Colony, Pimpri, Pune – 411018,Maharashtra India
(72)**Name of Inventor :**
**1)Kamath, Das Ajee**

(57) Abstract :
A system of placement and packaging of a fluid exchange accessories and an energy exchange accessories in a fluid handling machine with a rotor that forms the rotating or moving link of the kinematic chain of said fluid handling machine, and with a stator that forms the fixed link of said fluid handling machine, such that the stator encases the rotor and a first volume between said rotor and said stator are communicated with a second volume which is external to said first volume for exchange of fluids by means of said fluid exchange accessories and said energy exchange accessories are fitted at predetermined points on said fluid handling machine for energy to be added and removed from said first volume during operation of said fluid handling machine, wherein said fluid exchange accessories that include at least an intake port, at least an exhaust port, at least an intake valve, at least an exhaust valve and energy exchange accessories that includes, at least a fluid injecting device, at least a spark and energy addition device, at least an energy removal device, and at least a pressure relief valve, such that at least any one of said fluid exchange accessories and said energy exchange accessories are fitted on and are part of said rotor, with fluid and energy transmitted through pathways within the rotor. Fig. 1 is the representative figure.

No. of Pages : 21 No. of Claims : 8

(12) PATENT APPLICATION PUBLICATION
(19) INDIA
(22) Date of filing of Application :18/10/2013
(21) Application No.3280/MUM/2013 A
(43) Publication Date : 17/07/2015

(54) Title of the invention : METHODS AND SYSTEMS FOR RANKING OF HUMAN PROFILES

(51) International classification :G06F17/30
(31) Priority Document No :NA
(32) Priority Date :NA
(33) Name of priority country :NA
(86) International Application No :NA
Filing Date :NA
(87) International Publication No : NA
(61) Patent of Addition to Application Number :NA
Filing Date :NA
(62) Divisional to Application Number :NA
Filing Date :NA

(71)**Name of Applicant :**
**1)TATA CONSULTANCY SERVICES LIMITED**
Address of Applicant :Nirmal Building, 9th Floor, Nariman Point, Mumbai, Maharashtra 400021 India
(72)**Name of Inventor :**
**1)SRIVASTAVA, Rajiv Radheyshyam**
**2)PALSHIKAR, Girish Keshav**
**3)PATIL, Sangameshwar Suryakant**
**4)DUNGARWAL, Pragati Hiralal**
**5)SODANI, Abhay**
**6)PAWAR, Sachin**
**7)BHAT, Savita Suhas**
**8)HINGMIRE, Swapnil Vishveshwar**

(57) Abstract :
The present subject matter relates to method(s) and system(s) to rank human profiles based on selection criteria personalized to a selector. In an embodiment, the method includes obtaining querying criteria from the selector to query a database comprising a set of human profiles. Further, a subset of human profiles is determined from the set of human profiles based on the querying criteria and a default ranking mechanism. Furthermore, a selection based ranking is obtained for the subset of human profiles. Further, based on the selection based ranking, a ranking function is determined that is indicative of a relative inclination of the selector towards the one or more implicit attributes. Such a determination is by capturing at least one implicit attribute in the ranking function from the selection based ranking. Further, the ranking function is applied to rank a fresh set of human profiles based on the ranking function.

No. of Pages : 28 No. of Claims : 16

(12) PATENT APPLICATION PUBLICATION
(21) Application No.3283/MUM/2013 A
(19) INDIA
(22) Date of filing of Application :21/10/2013
(43) Publication Date : 17/07/2015

(54) Title of the invention : REBAR MADE FROM POLY URETHANE FIBER REINFORCED PLASTIC TO BE USED IN CONCRETE AS A TENSIONING DEVICE

| | | |
|---|---|---|
| (51) International classification | :C08J9/00, C08J9/10, C08G59/00 | (71)**Name of Applicant :** **1)MR. PRAKASHCHANDRA K. PRAJAPATI** Address of Applicant :230, SUDARSHAN NAGAR, SADATPURA, IDAR, DI- S.K., GUJARAT, PIN-383430, INDIA |
| (31) Priority Document No | :NA | (72)**Name of Inventor :** **1)MR. PRAKASHCHANDRA K. PRAJAPATI** |
| (32) Priority Date | :NA | |
| (33) Name of priority country | :NA | |
| (86) International Application No | :NA | |
| Filing Date | :NA | |
| (87) International Publication No | : NA | |
| (61) Patent of Addition to Application Number | :NA | |
| Filing Date | :NA | |
| (62) Divisional to Application Number | :NA | |
| Filing Date | :NA | |

(57) Abstract :
This invention is aimed to a new revolution in reinforced concrete structure. The invention is related to the process of manufacturing a new type of Rebar made from pu fiber reinforced plastic and Glass-reinforced plastic consist of fibers of polymer. The invented pu fiber rebar will be used in concrete structure as a tensioning device. The invented pu fiber rebar will become an idea! option to the steel rebar used in concrete. The invented pu fiber rebar is corrosion proof. Further, in situation of short circuit, the pu fiber rebar cannot supply electric current. The inventedpu fiberis light weight and easy to install during the construction process. Using the invented pu fiber rebar concrete construction will become easy and less expensive with compare to the steel rebar. The inventedpu rebar will also increase the healthy life of concrete structure for longer period of time without repairing and maintenance.

No. of Pages : 31 No. of Claims : 1

(12) PATENT APPLICATION PUBLICATION
(21) Application No.3284/MUM/2013 A
(19) INDIA
(22) Date of filing of Application :21/10/2013
(43) Publication Date : 17/07/2015

(54) Title of the invention : PERFORATED SHELL WITH FAN ON TOP FOR AIR CIRCULATION FOR USE IN WATER GENERATION DEVICES

| | | |
|---|---|---|
| (51) International classification | :F24F6/12 | (71)**Name of Applicant :** |
| (31) Priority Document No | :NA | **1)ANIT ASTHANA** |
| (32) Priority Date | :NA | Address of Applicant :501, SOLAIRS - II, OPP. L & T GATE NO. 6, SAKI VIHAR ROAD, ANDHERI (E), MUMBAI-400072, MAHARASHTRA, INDIA. |
| (33) Name of priority country | :NA | |
| (86) International Application No | :NA | |
| Filing Date | :NA | (72)**Name of Inventor :** |
| (87) International Publication No | : NA | **1)ANIT ASTHANA** |
| (61) Patent of Addition to Application Number | :NA | |
| Filing Date | :NA | |
| (62) Divisional to Application Number | :NA | |
| Filing Date | :NA | |

(57) Abstract :
The perforated shell on top with fan for air circulation is with number of perforations on it. The shape of the cover is like a dome. The perforated shell is to be considered as a cover on the top of the Atmospheric water generator. The main function of this apparatus is to draw atmospheric air from all the perforation and with the circulation of air from the fan.

No. of Pages : 6 No. of Claims : 4

(12) PATENT APPLICATION PUBLICATION
(21) Application No.3289/MUM/2013 A
(19) INDIA
(22) Date of filing of Application :21/10/2013
(43) Publication Date : 17/07/2015

(54) Title of the invention : RANDOMIZED SERIAL NUMBER AND SPLIT UNIQUE NUMBER ON PRODUCT PROTECTION LABEL.

| | |
|---|---|
| (51) International classification | :H04W12/06, H04L9/32 |
| (31) Priority Document No | :NA |
| (32) Priority Date | :NA |
| (33) Name of priority country | :NA |
| (86) International Application No | :NA |
| Filing Date | :NA |
| (87) International Publication No | : NA |
| (61) Patent of Addition to Application Number | :NA |
| Filing Date | :NA |
| (62) Divisional to Application Number | :NA |
| Filing Date | :NA |

(71)**Name of Applicant :**
**1)MR. UDAY SAKHARAM YADAV**
Address of Applicant :503, SUKANT CHS LTD, 5TH FLOOR, PLOT NO. 237, CHARKOP, KANDIVALI (W), MUMBAI-400067, MAHARASHTRA, INDIA.
(72)**Name of Inventor :**
**1)MR. UDAY SAKHARAM YADAV**

(57) Abstract :
My invention SUN ON PPC, requires shrink sleeve as PPC (Product Protection Cover). This requires more machinery at production line and difficult to put on the small caps. It needs some area below the cap to sit firmly. If the SUN is printed on the Label with all the benefits of shrink sleeve and then pasted on the cap and its below area manually or automatically, it may reduce the production cost and can be pasted on various shapes of containers easify.

No. of Pages : 7 No. of Claims : 3

(12) PATENT APPLICATION PUBLICATION
(19) INDIA
(22) Date of filing of Application :21/10/2013
(21) Application No.3290/MUM/2013 A
(43) Publication Date : 17/07/2015

(54) Title of the invention : SYSTEM AND METHOD FOR MONITORING AND CONTROLLING THERMAL CONDITION OF A DATA CENTER IN REAL-TIME

| | |
|---|---|
| (51) International classification | :G06F1/20, G06F15/00 |
| (31) Priority Document No | :NA |
| (32) Priority Date | :NA |
| (33) Name of priority country | :NA |
| (86) International Application No | :NA |
| Filing Date | :NA |
| (87) International Publication No | : NA |
| (61) Patent of Addition to Application Number | :NA |
| Filing Date | :NA |
| (62) Divisional to Application Number | :NA |
| Filing Date | :NA |

(71)**Name of Applicant :**
**1)TATA CONSULTANCY SERVICES LIMITED**
Address of Applicant :NIRMAL BUILDING, 9TH FLOOR, NARIMAN POINT, MUMBAI 400021, MAHARASHTRA, INDIA.
(72)**Name of Inventor :**
**1)DEODHAR, ANIRUDH**
**2)BHAGWAT, HARSHAD GIRISH**
**3)SINGH, UMESH**
**4)D, SANKARA NARAYANAN**
**5)PANNAMANENI, BHAVANI**
**6)SINGH, AMARENDRA KUMAR**
**7)JAYAPRAKASH, RAJESH**
**8)SIVASUBRAMANIAM, ANAND**

(57) Abstract :
Disclosed is a method and system for real-time monitoring and control to optimize operation of a data center by controlling operational parameter of cooling units impacting heat generating devices in the data center. A first-set of temperatures for the heat generating devices obtained continuously for being analyzed. Upon analyzing, the heat generating devices is identified in one of a hot condition and cold condition, and further the data center is categorized in one of hot detection mode and cold detection mode. From the cooling units, a target cooling unit is determined for being operated to optimize operation of the data center. Further, a control signal is iteratively generated comprising gradual changes in the operational parameters for the identified target cooling unit. The operational parameter further comprises a set-point of the target cooling unit which is incremented or decremented by a predefined value based on the categorization of the data center.

No. of Pages : 40 No. of Claims : 10

(12) PATENT APPLICATION PUBLICATION
(21) Application No.3292/MUM/2013 A
(19) INDIA
(22) Date of filing of Application :21/10/2013
(43) Publication Date : 17/07/2015

(54) Title of the invention : SYSTEM AND METHOD FOR CONTROLLING PERFORMANCE OF AN ENTERPRISE APPLICATION

| | |
|---|---|
| (51) International classification | :G06F9/44, G06Q10/00 |
| (31) Priority Document No | :NA |
| (32) Priority Date | :NA |
| (33) Name of priority country | :NA |
| (86) International Application No | :NA |
| Filing Date | :NA |
| (87) International Publication No | : NA |
| (61) Patent of Addition to Application Number | :NA |
| Filing Date | :NA |
| (62) Divisional to Application Number | :NA |
| Filing Date | :NA |

(71)**Name of Applicant :**
**1)TATA CONSULTANCY SERVICES LIMITED**
Address of Applicant :NIRMAL BUILDING, 9TH FLOOR, NARIMAN POINT, MUMBAI 400021, MAHARASHTRA, INDIA
(72)**Name of Inventor :**
**1)BALLA, RAMALINGESWARA RAO**
**2)DEVARAKONDA, JYOTHSNA**
**3)S.T.P, RANGA RAMANUJAM**

(57) Abstract :
Disclosed is a method and system for controlling performance of an enterprise application in a computer network. In the computer network, there may be multiple layers in N-tier architecture. Further, there may be one or more entities deployed over the computer network. A set of parameters may be received from at least one layer of the multiple layers of the N-tier architecture. The set of parameters received may be transformed into a set of formatted parameters, wherein the set of formatted parameters may be associated with one or more rules. Further, one or more formatted parameters of the set of formatted parameters may be correlated amongst them to identify anomalies in the enterprise application. For the anomalies identified, recommendation may be generated and implemented to control the performance of the enterprise application in the computer network.

No. of Pages : 30 No. of Claims : 12

(12) PATENT APPLICATION PUBLICATION
(21) Application No.3295/MUM/2013 A
(19) INDIA
(22) Date of filing of Application :21/10/2013
(43) Publication Date : 17/07/2015

(54) Title of the invention : A PROCESS FOR THE PREPARATION OF 7-CHLORO-5-OXO-1-(2-METHYL-4-AMINOBENZOYL)-2,3,4,5-TETRAHYDRO-1H-1-BENZAZEPINE

(51) International classification :C07D223/16
(31) Priority Document No :NA
(32) Priority Date :NA
(33) Name of priority country :NA
(86) International Application No :NA
Filing Date :NA
(87) International Publication No : NA
(61) Patent of Addition to Application Number :NA
Filing Date :NA
(62) Divisional to Application Number :NA
Filing Date :NA

(71)**Name of Applicant :**
**1)RPG LIFE SCIENCES LIMITED**
Address of Applicant :REGD. OFF.: RPG HOUSE, 463, DR. ANNIE BESANT ROAD, WORLI, MUMBAI, MAHARASHTRA, INDIA. PIN CODE: 400 030.
(72)**Name of Inventor :**
**1)BAPAT, UDAY RAJARAM**
**2)SRIVASTAVA, RANJAN PRASAD**
**3)KOLHE, PRAVIN CHABURAO**
**4)TALEKAR, PRAVIN GANPAT**

(57) Abstract :
Present invention provides a novel process for the preparation of 7 -Chloro-5-oxo-l-(2-methyl-4-Amino benzoyl) -2,3,4,5-tetrahydro-lH-benzazepine. This process is industrially feasible and scalable. The process does not make use of expensive, hazardous reagents and special equipments making it industrially feasible.

No. of Pages : 11 No. of Claims : 11

(12) PATENT APPLICATION PUBLICATION
(19) INDIA
(22) Date of filing of Application :21/10/2013
(21) Application No.3296/MUM/2013 A
(43) Publication Date : 17/07/2015

(54) Title of the invention : A PROCESS FOR THE PREPARATION OF BENZAZEPINE DERIVATIVE

| | |
|---|---|
| (51) International classification | :C07D223/16, A61K31/55 |
| (31) Priority Document No | :NA |
| (32) Priority Date | :NA |
| (33) Name of priority country | :NA |
| (86) International Application No | :NA |
| Filing Date | :NA |
| (87) International Publication No | : NA |
| (61) Patent of Addition to Application Number | :NA |
| Filing Date | :NA |
| (62) Divisional to Application Number | :NA |
| Filing Date | :NA |

(71)**Name of Applicant :**
**1)RPG LIFE SCIENCES LIMITED**
Address of Applicant :REGD. OFF.: RPG HOUSE, 463, DR. ANNIE BESANT ROAD, WORLI, MUMBAI, MAHARASHTRA, INDIA. PIN CODE: 400 030.
(72)**Name of Inventor :**
**1)BAPAT, UDAY RAJARAM**
**2)SRIVASTAVA, RANJAN PRASAD**
**3)KOLHE, PRAVIN CHABURAO**
**4)TALEKAR, PRAVIN GANPAT**

(57) Abstract :
Present invention provides a high yielding, safe and industrially feasible process for the preparation of benzazepine derivative. The dehalogenated side product 5-hydroxy-l-[2-methyi-4-(2-methylbenzoylamino) benzoyl]-2,3,4,5-tetrahydro-lH-1-benzazipine generation in this process is less than 0.1% by weight.

No. of Pages : 12 No. of Claims : 9

(12) PATENT APPLICATION PUBLICATION
(21) Application No.3297/MUM/2013 A
(19) INDIA
(22) Date of filing of Application :21/10/2013
(43) Publication Date : 17/07/2015

(54) Title of the invention : SYSTEM AND METHOD TO ADMINISTER A DENTAL COMPOUND INTO A TOOTH CAVITY

| | |
|---|---|
| (51) International classification | :A61C19/06, A61K8/22, A61K8/81 |
| (31) Priority Document No | :NA |
| (32) Priority Date | :NA |
| (33) Name of priority country | :NA |
| (86) International Application No | :NA |
| Filing Date | :NA |
| (87) International Publication No | : NA |
| (61) Patent of Addition to Application Number | :NA |
| Filing Date | :NA |
| (62) Divisional to Application Number | :NA |
| Filing Date | :NA |

(71)**Name of Applicant :**
**1)TIBDEWAL, Gaurav S.**
Address of Applicant :A-203, KANCHAN SARITA APPT. 16TH FARMLAND, RAMDASPETH NAGPUR, 440010, (M.S.) INDIA.
**2)JOGAD, Nitin P.**
(72)**Name of Inventor :**
**1)TIBDEWAL, Gaurav S.**
**2)JOGAD, Nitin P.**

(57) Abstract :
system to administer a dental compound typically associated with rheological properties into a tooth cavity is disclosed. The system comprising a bore needle with a calibrated stylet disposed therewithin is capable of containing and delivering the dental compound that condenses within a predefined length of the bore needle. A needle stopper is externally fitted to the bore needle at a pre-determined position that defines a working length of the bore needle to be placed within the tooth cavity. The stylet is pushed ahead to it full length to deliver a pre-formed, measured and well condensed dental compound plug at the apex of tooth.

No. of Pages : 15 No. of Claims : 10

(12) PATENT APPLICATION PUBLICATION
(19) INDIA
(22) Date of filing of Application :30/09/2013
(21) Application No.3105/MUM/2013 A
(43) Publication Date : 17/07/2015

(54) Title of the invention : A PROCESS FOR THE PREPARATION OF 3-(HYDROXYMETHYL)-6,11-DIHYDRO-11-(1-METHYL-4-PIPERIDINYLIDENE)-5H-IMIDAZO[2,1-B][3]BENZAZEPINE AN INTERMEDIATE OF ALCAFTADINE OR SALT THEREOF

| | |
|---|---|
| (51) International classification | :A61K33/06, A61K31/55 |
| (31) Priority Document No | :NA |
| (32) Priority Date | :NA |
| (33) Name of priority country | :NA |
| (86) International Application No | :NA |
| Filing Date | :NA |
| (87) International Publication No | : NA |
| (61) Patent of Addition to Application Number | :NA |
| Filing Date | :NA |
| (62) Divisional to Application Number | :NA |
| Filing Date | :NA |

(71)**Name of Applicant :**
**1)WOCKHARDT Ltd**
Address of Applicant :D-4, M.I.D.C INDUSTRIAL AREA, CHIKALTHANA, AURANGABAD-431 210 (M.S.) INDIA.
(72)**Name of Inventor :**
**1)Deo,Keshav**
**2)Merwade, Arvind Yekanathsa**
**3)Rafeeq, Mohammad**
**4)Rohit Kumar Sinha;**
**5)Chaniyara, Ravi**

(57) Abstract :
he present invention relates to a process for the preparation of 3-(hydroxymethyl)-6,11-dihydro-11-(1-methyl-4-piperidinylidene)-5H-imidazo[2,1-b][3]benzazepine of formula II or its salt from 6,11-dihydro-11-(1-methyl-4-piperidinylidene)-5H-imidazo[2,1-b][3]benzazepine or its salt by using formaldehyde in presence of acetic acid, sodium acetate and water.

No. of Pages : 17 No. of Claims : 10

(12) PATENT APPLICATION PUBLICATION
(21) Application No.3109/MUM/2013 A
(19) INDIA
(22) Date of filing of Application :30/09/2013
(43) Publication Date : 17/07/2015

(54) Title of the invention : A PROCESS FOR THE PREPARATION AND PURIFICATION OF SODIUM HYALURONATE OF PHARMACEUTICAL GRADE

| | |
|---|---|
| (51) International classification | :A61K31/715, C08B37/08 |
| (31) Priority Document No | :NA |
| (32) Priority Date | :NA |
| (33) Name of priority country | :NA |
| (86) International Application No | :NA |
| Filing Date | :NA |
| (87) International Publication No | : NA |
| (61) Patent of Addition to Application Number | :NA |
| Filing Date | :NA |
| (62) Divisional to Application Number | :NA |
| Filing Date | :NA |

(71)**Name of Applicant :**
**1)UNICHEM LABORATORIES LIMITED**
Address of Applicant :UNICHEM BHAVAN, PRABHAT ESTATE, OFF. S. V. ROAD, JOGESHWARI (W), MUMBAI - 400 102, MAHARASHTRA, INDIA.
(72)**Name of Inventor :**
**1)DR. SANJEEV KUMAR SHARMA**
**2)MS. CONCHITA FLORA VERONICA DE SOUZA**
**3)RAKESH KUMAR**

(57) Abstract :
The present invention provides a process for the fermentative production and downstream purification of sodium hyaluronate of pharmaceutical grade and biomedical applications. The process includes bacterial fermentation with carbon sources like starch and sucrose to give Hyaluronic acid of high molecular weight. The process includes purification steps involving cross flow filtration for clarification, treatment with aromatic adsorbent resin and precipitation of sodium hyaluronate with a suitable solvent.

No. of Pages : 29 No. of Claims : 19

(12) PATENT APPLICATION PUBLICATION
(19) INDIA
(22) Date of filing of Application :30/09/2013
(21) Application No.3111/MUM/2013 A
(43) Publication Date : 17/07/2015

(54) Title of the invention : LUBRICATION SYSTEM FOR COMPRESSOR

| | |
|---|---|
| (51) International classification | :F04C18/16, F04C29/02 |
| (31) Priority Document No | :NA |
| (32) Priority Date | :NA |
| (33) Name of priority country | :NA |
| (86) International Application No | :NA |
| Filing Date | :NA |
| (87) International Publication No | : NA |
| (61) Patent of Addition to Application Number | :NA |
| Filing Date | :NA |
| (62) Divisional to Application Number | :NA |
| Filing Date | :NA |

(71)**Name of Applicant :**
**1)EMERSON CLIMATE TECHNOLOGIES INDIA LTD.**
Address of Applicant :KARAD DHEBEWADI ROAD, KARAD - 415110, MAHARASHTRA, INDIA.
(72)**Name of Inventor :**
**1)SADISH KUMAR, MURALI**
**2)PATIL, PANKAJ**

(57) Abstract :
A lubrication system for a compressor includes a crankshaft, a connecting rod and a first opening on a crankcase. The crankshaft is supported within crankcase and includes at least one shaft portion and eccentric portion provided with at least one of slits, slots, grooves and apertures for configuring a fluid circuit between oil sump and an opening configured on eccentric portion for creating lubricating fluid splash. The connecting rod includes a big end having a first bore for receiving the eccentric portion and receiving fluid from the fluid circuit for lubrication thereat, a small end having a second bore for receiving a piston pin and a connecting body for connecting small end to big end such that operative top surfaces of small end and big ends are non-coplanar to configured space above first opening configured that receives, holds and supplies lubricating fluid to piston, piston pin, bearings and cylinder bore.

No. of Pages : 54 No. of Claims : 5

(12) PATENT APPLICATION PUBLICATION
(19) INDIA
(22) Date of filing of Application :24/10/2013
(21) Application No.3333/MUM/2013 A
(43) Publication Date : 17/07/2015

(54) Title of the invention : METHOD AND SYSTEM FOR DETECTION OF BLOWOUT IN PIPES/TUBES

| | |
|---|---|
| (51) International classification | :E21B21/08, E21B33/06 |
| (31) Priority Document No | :NA |
| (32) Priority Date | :NA |
| (33) Name of priority country | :NA |
| (86) International Application No | :NA |
| Filing Date | :NA |
| (87) International Publication No | : NA |
| (61) Patent of Addition to Application Number | :NA |
| Filing Date | :NA |
| (62) Divisional to Application Number | :NA |
| Filing Date | :NA |

(71)**Name of Applicant :**
**1)JAIN IRRIGATION SYSTEMS LIMITED**
Address of Applicant :JAIN PLASTIC PARK, NH NO.6, BAMBHORI, JALGAON-425001 Maharashtra India
(72)**Name of Inventor :**
**1)MICHAEL PATRICK DEFRANK**
**2)AJIT BHAVARLAL JAIN**

(57) Abstract :
Disclosed is a method for detecting a blowout in an irrigation pipe. The irrigation pipe is extruded. Further a positive air pressure may be created by circulating air through the irrigation pipe. The irrigation pipe with positive air pressure is then fed into a tank, wherein the tank comprises a coolant liquid. Further at least one air bubble is trapped at a surface of the tank.

No. of Pages : 7 No. of Claims : 4

(12) PATENT APPLICATION PUBLICATION
(21) Application No.3334/MUM/2013 A
(19) INDIA
(22) Date of filing of Application :24/10/2013
(43) Publication Date : 17/07/2015

(54) Title of the invention : APPARATUS AND METHOD FOR MEASUREMENT OF FLOW RATE OF CEREBROSPINAL FLUID IN A CONDUIT

| | |
|---|---|
| (51) International classification | :A61B5/05, A61B5/026, A61B5/03 |
| (31) Priority Document No | :NA |
| (32) Priority Date | :NA |
| (33) Name of priority country | :NA |
| (86) International Application No | :NA |
| Filing Date | :NA |
| (87) International Publication No | : NA |
| (61) Patent of Addition to Application Number | :NA |
| Filing Date | :NA |
| (62) Divisional to Application Number | :NA |
| Filing Date | :NA |

(71)**Name of Applicant :**
**1)INDIAN INSTITUTE OF TECHNOLOGY, BOMBAY**
Address of Applicant :INDIAN INSTITUTE OF TECHNOLOGY BOMBAY, POWAI, MUMBAI-400076. Maharashtra India
(72)**Name of Inventor :**
**1)SHARMA GAURAV RAVI**
**2)PATIL TARKESHWAR CHANDRAKANT**
**3)PROF. DUTTAGUPTA SIDDHARTHA PRAKASH**
**4)SHYAMSUNDER SHREYAS**
**5)SHEIKH JAVED YUNUS**

(57) Abstract :
The present invention illustrates an apparatus as well as a process for measurement of flow velocity of CSF in a conduit. The apparatus comprises a heating element mounted on the conduit, the heating element arranged for heating the CSF flowing through the conduit for generating bubbles. The apparatus further comprises a two optical sensing devices mounted sequentially on the conduit and downstream from the heating element. The first optical sensing device and the second optical sensing device are separated by a predetermined device interval. Both the first and the second optical sensing devices comprise an optical emitter and an optical detector. The apparatus further comprises a processing device coupled to the optical sensing devices, wherein the signals from the optical sensing devices are transmitted to the processing device for detection of bubbles, resulting in the detection of the flow velocity.

No. of Pages : 37 No. of Claims : 16

(12) PATENT APPLICATION PUBLICATION
(19) INDIA
(22) Date of filing of Application :30/09/2013
(21) Application No.3100/MUM/2013 A
(43) Publication Date : 17/07/2015

(54) Title of the invention : FIXED SHAFT SUGARCANE CRUSHING MILL

(51) International classification :B65G43/08,C13B10/06
(31) Priority Document No :NA
(32) Priority Date :NA
(33) Name of priority country :NA
(86) International Application No :NA
Filing Date :NA
(87) International Publication No : NA
(61) Patent of Addition to Application Number :NA
Filing Date :NA
(62) Divisional to Application Number :NA
Filing Date :NA

(71)**Name of Applicant :**
**1)SHINDE, PANDURANG RAMCHANDRA**
Address of Applicant :RAMBHAGYA, RADHIKA ROAD, SATARA-415001, MAHARASHTRA STATE, INDIA
(72)**Name of Inventor :**
**1)SHINDE, PANDURANG RAMCHANDRA**

(57) Abstract :
Disclosed is a fixed shaft sugarcane mill (100). The fixed shaft sugarcane mill (100) comprises a base frame (20), a pair of side frames (30), a fixed shaft assembly (60), a pair of cylinders (70), an oil circulation system and a chute. The fixed shaft sugarcane mill (100) includes a plurality of drive bearings that act as a support for at least two rollers (32) and internal gearboxes (34, 36) thereby eliminating the need for separate bearings. The fixed shaft sugarcane mill (100) improves efficiency of a drive unit due to elimination of journal bearings and extra bearings required for supporting the at least two rollers (32).

No. of Pages : 22 No. of Claims : 4

(12) PATENT APPLICATION PUBLICATION
(21) Application No.3101/MUM/2013 A
(19) INDIA
(22) Date of filing of Application :30/09/2013
(43) Publication Date : 17/07/2015

(54) Title of the invention : ADJUSTABLE CHARGING HANDLE ASSEMBLY FOR CIRCUIT BREAKERS

| | |
|---|---|
| (51) International classification | :H01H3/60, H01H43/28 |
| (31) Priority Document No | :NA |
| (32) Priority Date | :NA |
| (33) Name of priority country | :NA |
| (86) International Application No | :NA |
| Filing Date | :NA |
| (87) International Publication No | : NA |
| (61) Patent of Addition to Application Number | :NA |
| Filing Date | :NA |
| (62) Divisional to Application Number | :NA |
| Filing Date | :NA |

(71)**Name of Applicant :**
**1)LARSEN AND TOUBRO LIMITED**
Address of Applicant :LARSEN & TOUBRO LIMITED L&T HOUSE, BALLARD ESTATE, P. O. BOX: 278, MUMBAI 400 001, Maharashtra India
(72)**Name of Inventor :**
**1)HIMADRI SENGUPTA**

(57) Abstract :
Disclosed is an adjustable charging handle assembly for circuit breakers having movable electrical contacts coupled to a shaft. The adjustable charging handle assembly comprises a bearing holder assembly capable of being connected to a mechanism side plate (35) and a handle assembly capable of communicating with the bearing holder assembly. In the adjustable charging handle assembly, loading is distributed by a bearing member of the bearing holder assembly and handle assembly. Further, with adjustment provided in the charging handle assembly, both interchangeability and modularity are achieved.

No. of Pages : 19 No. of Claims : 4

(12) PATENT APPLICATION PUBLICATION
(21) Application No.3102/MUM/2013 A
(19) INDIA
(22) Date of filing of Application :30/09/2013
(43) Publication Date : 17/07/2015

(54) Title of the invention : JUNCTION BOX FOR INTERLOCKING THREE CIRCUIT BREAKERS

| | |
|---|---|
| (51) International classification | :H01H3/60, H01H43/28 |
| (31) Priority Document No | :NA |
| (32) Priority Date | :NA |
| (33) Name of priority country | :NA |
| (86) International Application No | :NA |
| Filing Date | :NA |
| (87) International Publication No | : NA |
| (61) Patent of Addition to Application Number | :NA |
| Filing Date | :NA |
| (62) Divisional to Application Number | :NA |
| Filing Date | :NA |

(71)**Name of Applicant :**
**1)LARSEN AND TOUBRO LIMITED**
Address of Applicant :LARSEN & TOUBRO LIMITED L&T HOUSE, BALLARD ESTATE, P. O. BOX: 278, MUMBAI 400 001, Maharashtra India
(72)**Name of Inventor :**
**1)HARIKRISHNAN MANNATIL**
**2)JOSEPH V**

(57) Abstract :
Disclosed is a junction box for interlocking three circuit breakers. The junction box comprises a first plate member having at least three flanges attached to a base thereof. Each flange includes an opening configured thereon. Further, the junction box comprises a second plate member capable of being secured over the first plate member, and a plurality of links. Each link of the plurality of link includes an oblong slot configured at one end thereof. The plurality of links hinged at a centre of the first plate member. Specifically, the plurality of links forms at least three pairs of link and each link of each pair of links is configured with other link of the pair such that the slots of the two links of the pair of links correspond to each other. Further, the junction box comprises at least three bowden cables capable of passing through the openings of the three flanges. Each bowden cable of the three bowden cables includes one end coupled to each circuit breaker of the multiple circuit breakers and the other end with a cable head is secured in the oblong slots of the pair of links.

No. of Pages : 29 No. of Claims : 2

(12) PATENT APPLICATION PUBLICATION
(19) INDIA
(22) Date of filing of Application :24/10/2013
(21) Application No.3343/MUM/2013 A
(43) Publication Date : 17/07/2015

(54) Title of the invention : SMART ENERGY METER

(51) International classification :G08C19/22
(31) Priority Document No :NA
(32) Priority Date :NA
(33) Name of priority country :NA
(86) International Application No :NA
Filing Date :NA
(87) International Publication No : NA
(61) Patent of Addition to Application Number :NA
Filing Date :NA
(62) Divisional to Application Number :NA
Filing Date :NA

(71)**Name of Applicant :**
**1)PARUL AROGYA SEVA MANDAL**
Address of Applicant :P.O. LIMDA, TA: WAGHODIA, DIST: VADODARA-391760, GUJARAT, INDIA.
(72)**Name of Inventor :**
**1)JETHWA, TARUN**
**2)PANCHAL, SHIVANGKUMAR**
**3)LADVA, KISHAN**
**4)MEWADA, HARDIK**

(57) Abstract :
A Smart Energy Meter having wireless module and prepaid concept is disclosed here. There are several modes in which user can operate energy meter. Some unique modes of smart energy meter are normal mode, power saver mode, safe mode, security mode etc. There is a provision of password in order to change modes. In our invention the cost of energy used will be deducted from the balance amount available in SIM-card. Each mode of operation contains a unique quality or feature about the meter. Power Saver Mode automatically adjusts working of appliances in order to save energy and thereby money. Safe Mode can save the appliances from sudden fluctuations of (high or low) voltages. Security Mode will identify the authenticity of the appliances to get switched on or off, and if i unauthorized, it alarms owner about the security break by sending message and blows up siren. For changing from mode to another user is required to provide password.

No. of Pages : 12 No. of Claims : 14

(12) PATENT APPLICATION PUBLICATION
(19) INDIA
(22) Date of filing of Application :24/10/2013
(21) Application No.3344/MUM/2013 A
(43) Publication Date : 17/07/2015

(54) Title of the invention : GYRATORY SKYSCRAPER

| | |
|---|---|
| (51) International classification | :E04B 1/00, F24F13/00 |
| (31) Priority Document No | :NA |
| (32) Priority Date | :NA |
| (33) Name of priority country | :NA |
| (86) International Application No | :NA |
| Filing Date | :NA |
| (87) International Publication No | : NA |
| (61) Patent of Addition to Application Number | :NA |
| Filing Date | :NA |
| (62) Divisional to Application Number | :NA |
| Filing Date | :NA |

(71)**Name of Applicant :**
**1)PARUL AROGYA SEVA MANDAL**
Address of Applicant :P.O. LIMDA, TA: WAGHODIA, DIST. VADODARA. PIN-391 760, GUJARAT, INDIA
(72)**Name of Inventor :**
**1)PATHAK, UMANGI**
**2)VYAS, JAKITA**
**3)NAIR, SAVITHA**
**4)PATEL, KHANTI**
**5)CHAWLA, YASH**

(57) Abstract :
This innovation relates to mechanical system in general and more specifically to a rotating system for buildings in general which, according to the characteristics there of, possesses as a basic principle to provide the formation of a rotating system in a proper and a specific mechanical driving structure for the application in commercial and/or residential building with two or more storey or floors. To provide, in an extremely comfortable, practical and safe way, that some of the floors rotate freely and independently in either direction, at any moment and for any number of turns directly by the residents command and having safety and versatility. With specific design and shape, it is easily accessible for a better adaptation and safety for the users, practical handling, functionality, affordable cost. Due to its general characteristics and dimensions, it is easily adaptable to any type of building, users and places, regardless of the characteristics.

No. of Pages : 9 No. of Claims : 7

(12) PATENT APPLICATION PUBLICATION
(21) Application No.3345/MUM/2013 A
(19) INDIA
(22) Date of filing of Application :24/10/2013
(43) Publication Date : 17/07/2015

(54) Title of the invention : PROCESS FOR PREPARATION OF HIGH PERFORMANCE CONCRETE INCORPORATING ALCCOFINE AND FLY ASH

| | | |
|---|---|---|
| (51) International classification | :C04B22/14, C04B28/12, C04B18/14 | (71)**Name of Applicant :** **1)PARUL AROGYA SEVA MANDAL** Address of Applicant :P.O. LIMDA, TA: WAGHODIA, DIST: VADODARA. PIN-391 760, GUJARAT, INDIA |
| (31) Priority Document No | :NA | (72)**Name of Inventor :** |
| (32) Priority Date | :NA | **1)SONI, DEVAL** |
| (33) Name of priority country | :NA | **2)KULKARNI, SUHASINI** |
| (86) International Application No | :NA | |
| Filing Date | :NA | |
| (87) International Publication No | : NA | |
| (61) Patent of Addition to Application Number | :NA | |
| Filing Date | :NA | |
| (62) Divisional to Application Number | :NA | |
| Filing Date | :NA | |

(57) Abstract :
A process for the preparation of high performance concrete using alccofine and fly ash is disclosed here. Concrete (Grade M80) was prepared incorporating different concentrations of alccofine and fly ash, as replacements for cement, The concrete specimens were tested after curing for different age levels for mechanical properties such as cube compressive strength, split tensile strength, flexural strength and other tests. Tests were also conducted for cement, chemical admixture, coarse aggregate and fine aggregate.

No. of Pages : 19 No. of Claims : 7

(12) PATENT APPLICATION PUBLICATION
(21) Application No.3346/MUM/2013 A
(19) INDIA
(22) Date of filing of Application :24/10/2013
(43) Publication Date : 17/07/2015

(54) Title of the invention : A VISCO-ELASTIC DAMPER FOR REDUCTION OF VIBRATIONS IN A STRUCTURE AGAINST DYNAMIC LOADING

| | |
|---|---|
| (51) International classification | :F16F15/02, F16F9/30 |
| (31) Priority Document No | :NA |
| (32) Priority Date | :NA |
| (33) Name of priority country | :NA |
| (86) International Application No | :NA |
| Filing Date | :NA |
| (87) International Publication No | : NA |
| (61) Patent of Addition to Application Number | :NA |
| Filing Date | :NA |
| (62) Divisional to Application Number | :NA |
| Filing Date | :NA |

(71)**Name of Applicant :**
**1)PARUL AROGYA SEVAMANDAL**
Address of Applicant :P.O. LIMDA, TA: WAGHODIA, DIST: VADODARA-391760, GUJARAT, INDIA
(72)**Name of Inventor :**
**1)CHAUHAN, AMIT KUMAR**
**2)GONDALIYA, KAMLESH**
**3)PATEL, TRUSHAR**
**4)PATEL, JIVIK**
**5)PARIKH, ARPIT**

(57) Abstract :
Out of the several techniques available for controlling vibrations in a structure, the concept of using tuned mass damper (TMD) or visco-elaslic damper is a newer one. The effectiveness of using TMD for controlling vibrations of a structure is investigated. At first a numerical algorithm was developed to investigate the response of a shear building fitted with a TMD. Then another numerical algorithm was developed to investigate the response of a 2D frame model fitted witlra TMD. A total of three loading conditions were applied at the base of the structure. From the study it was found that. TMD can be effectively used for vibration control of structures. TMD was more effective when damping ratio of the structure is less. Gradually increasing the mass ratio of the TMD. it was observed that, a gradual decrease in the displacement of the structure look place.

No. of Pages : 12 No. of Claims : 5

(12) PATENT APPLICATION PUBLICATION
(21) Application No.3347/MUM/2013 A
(19) INDIA
(22) Date of filing of Application :24/10/2013
(43) Publication Date : 17/07/2015

(54) Title of the invention : AUTOMATICALLY ACTUATED FIRE EXTINGUISHING APPARATUS USING PLURALITY OF HEAT SENSORS

| | |
|---|---|
| (51) International classification | :A62C35/10, A62C35/00 |
| (31) Priority Document No | :NA |
| (32) Priority Date | :NA |
| (33) Name of priority country | :NA |
| (86) International Application No | :NA |
| Filing Date | :NA |
| (87) International Publication No | : NA |
| (61) Patent of Addition to Application Number | :NA |
| Filing Date | :NA |
| (62) Divisional to Application Number | :NA |
| Filing Date | :NA |

(71)**Name of Applicant :**
**1)DEEPAK PRADHAN**
Address of Applicant :602, 6TH FLOOR, DOLI CHAMBERS, BEHIND STRAND CINEMA, COLABA, MUMBAI-400005, MAHARASHTRA, INDIA
**2)ASHUTOSH MANGAL**
(72)**Name of Inventor :**
**1)DEEPAK PRADHAN**
**2)ASHUTOSH MANGAL**

(57) Abstract :
The fire extinguishing apparatus combines a modular suppression system and a portable fire extinguisher based on a valve and one or more heat sensors. The apparatus disclosed herein comprises a temperature sensor based automatic fire extinguishing apparatus configured for multiple operating modes. In an embodiment, the apparatus described herewith provides means for extinguishing fire in an automatic and unattended mode, particularly in cases where the fire fighting personnel is not able to reach the fire source due to immense heat generated by the fire outbreak.

No. of Pages : 30 No. of Claims : 15

(12) PATENT APPLICATION PUBLICATION
(19) INDIA
(22) Date of filing of Application :24/10/2013
(21) Application No.3351/MUM/2013 A
(43) Publication Date : 17/07/2015

(54) Title of the invention : GSM BASED WIRELESS SYSTEM FOR OPERATING AND CONTROLLING A GENERATOR

(51) International classification :G01S5/02, G01S1/02, G01S19/03
(31) Priority Document No :NA
(32) Priority Date :NA
(33) Name of priority country :NA
(86) International Application No :NA
Filing Date :NA
(87) International Publication No : NA
(61) Patent of Addition to Application Number :NA
Filing Date :NA
(62) Divisional to Application Number :NA
Filing Date :NA

(71)**Name of Applicant :**
**1)PARUL AROGYA SEVA MANDAL**
Address of Applicant :P.O. LIMDA, TA: WAGHODIA, DIST: VADODARA-391760, GUJARAT, INDIA
(72)**Name of Inventor :**
**1)SHAH, RUSHBH**
**2)TAILOR, DHRUVIL**
**3)RANA, RONAK**
**4)PATEL, RONAK**
**5)GAJJAR, RITAL**

(57) Abstract :
A method GSM based wireless system for operating and controlling a generator is disclosed in this patent. This method consists of utilizing a mobile phone to remotely control an appliance control system. The microcontroller which is a part of the system would control the circuit based on information given to it. In this method a provision is made to measure the parameters of the system like voltage, current, frequency, temperature and fuel level. In case any of the above set parameters crosses the limit, may be upper or lower, provision is made to give an indication by a buzzer and s.m.s also would be sent to the pre-selected mobile number. In addition, the generator would be switched off automatically.

No. of Pages : 15 No. of Claims : 5

(12) PATENT APPLICATION PUBLICATION
(21) Application No.3352/MUM/2013 A
(19) INDIA
(22) Date of filing of Application :24/10/2013
(43) Publication Date : 17/07/2015

(54) Title of the invention : A DEVICE BASED ON A NOVEL METHOD FOR CONTROLLING DIFFERENT HOME APPLIANCES INCLUDING A WHEEL-CHAIR

| | |
|---|---|
| (51) International classification | :G08B15/00, H05B37/02 |
| (31) Priority Document No | :NA |
| (32) Priority Date | :NA |
| (33) Name of priority country | :NA |
| (86) International Application No | :NA |
| Filing Date | :NA |
| (87) International Publication No | : NA |
| (61) Patent of Addition to Application Number | :NA |
| Filing Date | :NA |
| (62) Divisional to Application Number | :NA |
| Filing Date | :NA |

(71)**Name of Applicant :**
**1)PARUL AROGYA SEVA MANDAL**
Address of Applicant :P.O. LIMDA, TA: WAGHODIA, DIST: VADODARA-391760, GUJARAT, INDIA
(72)**Name of Inventor :**
**1)MEHTA, HARSH**
**2)LOKHANWALA, M A**

(57) Abstract :
A device and a method for controlling electrical / electronic appliances and also the movements of a motorized wheel-chair with hand gestures are disclosed in this innovation. User can operate various appliances conveniently and control wheel-chair very easily from a remote place by his / her hand gestures. The device is designed to operate in two Modes, and it consists of RF Transmitter, Equipment Control Unit (ECU) and Wheel-Chair Control Unit (WCCU). The transmitter is mounted on a glove or two gloves as desired. Signals are emitted corresponding to the hand gestures of the user with the help of a glove or gloves. Both the Control Units are fitted with RF receiver and a i controller which analyze / recognize the hand gestures by comparing the received motion information with stored motion information and subsequently operate either appliances or control wheel-chair depending upon the mode of operation selected by the user. As a handicapped (or physically challenged) person is unable to operate different devices including the wheel-chair, this system can ease his / her day-to-day activity without seeking the help of any other person.

No. of Pages : 12 No. of Claims : 10

(12) PATENT APPLICATION PUBLICATION
(19) INDIA
(22) Date of filing of Application :24/10/2013
(21) Application No.3353/MUM/2013 A
(43) Publication Date : 17/07/2015

(54) Title of the invention : REMOTE CONTROLLED FLOOR CLEANING MACHINE

(51) International classification :A47L11/40
(31) Priority Document No :NA
(32) Priority Date :NA
(33) Name of priority country :NA
(86) International Application No :NA
Filing Date :NA
(87) International Publication No : NA
(61) Patent of Addition to Application Number :NA
Filing Date :NA
(62) Divisional to Application Number :NA
Filing Date :NA

(71)**Name of Applicant :**
**1)PARUL AROGYA SEVA MANDAL**
Address of Applicant :P.O. LIMDA, TA: WAGHODIA, DIST: VADODARA-391760, GUJARAT, INDIA
(72)**Name of Inventor :**
**1)SHAH, MEET**
**2)SHAH, PRASHANT**
**3)GANDHI, PREYANK**
**4)JOSHI, KETAN**
**5)JADHAV, GIRISH**

(57) Abstract :
Remote Controlled Floor Cleaning machine is a machine that cleans the floor by consuming less energy with minimum efforts. It is controlled by wireless remote and it is designed to perform three most important functions for floor cleaning viz suction of dust, scrubbing of floor with water and brush and drying of floor. The design is very simple but totally different then other floor cleaning machines available in present market. The working sequence of this machine is considered to be unique.

No. of Pages : 20 No. of Claims : 14

(12) PATENT APPLICATION PUBLICATION
(19) INDIA
(22) Date of filing of Application :24/10/2013
(21) Application No.3355/MUM/2013 A
(43) Publication Date : 17/07/2015

(54) Title of the invention : PROCESS FOR PREPARATION OF HIGH STRENGTH CONCRETE USING GLASS FIBERS

(51) International classification :C04B28/04,E04C5/07
(31) Priority Document No :NA
(32) Priority Date :NA
(33) Name of priority country :NA
(86) International Application No :NA
Filing Date :NA
(87) International Publication No : NA
(61) Patent of Addition to Application Number :NA
Filing Date :NA
(62) Divisional to Application Number :NA
Filing Date :NA

(71)**Name of Applicant :**
**1)PARUL AROGYA SEVA MANDAL**
Address of Applicant :P.O. LIMDA, TA: WAGHODIA, DIST: VADODARA. PIN-391 760, GUJARAT, INDIA
(72)**Name of Inventor :**
**1)PUROHIT, SHONKKUMAR**
**2)KULKARNI, SUHASINI**

(57) Abstract :
Glass-fiber reinforced concrete (GFRC) is a material made of a cementitious matrix composed of cement, sand, water and admixtures, in which short length glass fibers are dispersed. In this study trial tests for concrete without and with alkali-resistant (AR) glass fibers are conducted to indicate the differences in compressive strength by using specimens of standard size cubes. GFRC is a form of concrete that uses fine sand, cement. AR-glass fiber, water, and other admixtures. It is mainly used in exterior building facade panels and as architectural precast concrete. This material is ideally suitable in making shapes on the front of any building and it is less dense than steel.

No. of Pages : 10 No. of Claims : 7

(12) PATENT APPLICATION PUBLICATION
(19) INDIA
(22) Date of filing of Application :27/09/2013
(21) Application No.3080/MUM/2013 A
(43) Publication Date : 17/07/2015

(54) Title of the invention : COMPOSITE VEHICULAR HANDLEBAR

| | |
|---|---|
| (51) International classification | :B62K21/12, B62K21/00 |
| (31) Priority Document No | :NA |
| (32) Priority Date | :NA |
| (33) Name of priority country | :NA |
| (86) International Application No | :NA |
| Filing Date | :NA |
| (87) International Publication No | : NA |
| (61) Patent of Addition to Application Number | :NA |
| Filing Date | :NA |
| (62) Divisional to Application Number | :NA |
| Filing Date | :NA |

(71)**Name of Applicant :**
**1)MAHINDRA & MAHINDRA LIMITED**
Address of Applicant :R&D CENTER, AUTOMOTIVE SECTOR, 89, M.I.D.C., SATPUR, NASHIK - 422 007 MAHARASHTRA STATE, INDIA
(72)**Name of Inventor :**
**1)DINESH DNYANESHWAR WELUKAR**
**2)SANCHIT KUMAR SRIVASTAVA**
**3)VIRENDRA MADHUSUDAN BHEDA**

(57) Abstract :
Disclosed is a composite vehicular handlebar assembly that enables reduction of overall weight of a vehicle and increases the fuel efficiency. The composite vehicular handlebar assembly is additionally integrated with value added features thereby improving the customer perceived quality.

No. of Pages : 20 No. of Claims : 6

(12) PATENT APPLICATION PUBLICATION
(21) Application No.3082/MUM/2013 A
(19) INDIA
(22) Date of filing of Application :27/09/2013
(43) Publication Date : 17/07/2015

(54) Title of the invention : SAND AND SOIL SCREENER(FILTER).

| | |
|---|---|
| (51) International classification | :B03B9/02, B03B 5/00 |
| (31) Priority Document No | :NA |
| (32) Priority Date | :NA |
| (33) Name of priority country | :NA |
| (86) International Application No | :NA |
| Filing Date | :NA |
| (87) International Publication No | : NA |
| (61) Patent of Addition to Application Number | :NA |
| Filing Date | :NA |
| (62) Divisional to Application Number | :NA |
| Filing Date | :NA |

(71)**Name of Applicant :**
**1)ARUN GOMTI SHANKAR SHUKLA**
Address of Applicant :670, KAMLA NEHRU NAGAR, GARHA ROAD, JABALPUR, M.P., INDIA, 482002
(72)**Name of Inventor :**
**1)ARUN GOMTI SHANKAR SHUKLA**

(57) Abstract :
The present invention is a screener of sand of rotary-drum type. A net of desired size of holes completely covers the rotary drum-frame. It has a novel part - a metallic-plate spiral running across the whole length of the drum and welded on it securely - Figure -1 of the drawings shows complete machine except optional parts. As shown in figure -1 the rotary drum (2) moves either by power-motor (1) or manually by handle (5). . Natural (raw) sand is supplied at one end of the drum (2). When the drum is rotated the sand starts rolling on the net, now the spiral (8) having sufficient width constrains the movement of the sand between two neighboring walls of the spiral (8) and the sand has to per force travel the whole path created by fitting of the spiral (8) on the drum (2). The long journey of the raw sand caused by spiral (8), a novelty of the present invention, ensures complete screening and no sand is lost and only the unwanted gravel and other coarse particles reach the other end of the drum (2) and screened sand is received and collected beneath the drum (2).

No. of Pages : 18 No. of Claims : 4

(12) PATENT APPLICATION PUBLICATION
(21) Application No.3083/MUM/2013 A
(19) INDIA
(22) Date of filing of Application :27/09/2013
(43) Publication Date : 17/07/2015

(54) Title of the invention : 3D WOVEN ORTHOGONAL INTERLACED FABRIC WITH NOVEL ROTATING DISK SHEDDING MECHANISM.

| | |
|---|---|
| (51) International classification | :D03D41/00, D03D25/00 |
| (31) Priority Document No | :NA |
| (32) Priority Date | :NA |
| (33) Name of priority country | :NA |
| (86) International Application No | :NA |
| Filing Date | :NA |
| (87) International Publication No | : NA |
| (61) Patent of Addition to Application Number | :NA |
| Filing Date | :NA |
| (62) Divisional to Application Number | :NA |
| Filing Date | :NA |

(71)**Name of Applicant :**
**1)MR. SHARAD NARHAR KALE**
Address of Applicant :3, SHUBHANGI APT, S.T. COLONY ROAD, VISHRAMBAG, SANGLI, MAHARASHTRA-416415 India
(72)**Name of Inventor :**
**1)MR. SHARAD NARHAR KALE**

(57) Abstract :
A 3D woven orthogonal fabric material comprises of multiple layered warp yarns interlacing with two sets of multiple wefts in each orthogonal direction, either interlacing with warp threads or laid without interlacement with the warp threads contributing to the mechanical strength of the fabric. This invention provides a rotating disk type shedding mechanism to manufacture a highly integrated 3D woven orthogonal interlaced fabric with different weave construction. The system provides an added advantage of insertion of both orthogonal sets of wefts without changing the shed. The shed can be changed by rotating the disk, for the insertion of second set of wefts. Insertion of wefts can also be done in angular direction adding to the mechanical strength of the fabric. The produced woven orthogonal 3D fabric material can then be used as reinforcements in composite structures in applications like aviation, automobile, space technology etc.

No. of Pages : 24 No. of Claims : 10

(12) PATENT APPLICATION PUBLICATION
(21) Application No.3363/MUM/2013 A
(19) INDIA
(22) Date of filing of Application :25/10/2013
(43) Publication Date : 17/07/2015

(54) Title of the invention : ELECTRONIC GEOMETRIC COMPASSES

| | |
|---|---|
| (51) International classification | :G01C17/30, G01C17/38 |
| (31) Priority Document No | :NA |
| (32) Priority Date | :NA |
| (33) Name of priority country | :NA |
| (86) International Application No | :NA |
| Filing Date | :NA |
| (87) International Publication No | : NA |
| (61) Patent of Addition to Application Number | :NA |
| Filing Date | :NA |
| (62) Divisional to Application Number | :NA |
| Filing Date | :NA |

(71)**Name of Applicant :**
**1)RAJARAMBAPU INSTITUTE OF TECHNOLOGY**
Address of Applicant :RAJARAMNAGAR, ISLAMPUR, DIST. SANGLI - 415414, MAHARASHTRA, INDIA.
(72)**Name of Inventor :**
**1)JAGTAP SATYAWAN RAMCHANDRA**

(57) Abstract :
An electronic geometric compass comprises a housing, a first and a second arm having an first operative end portion and a second operative end portion with a first and a second rotatable member having a pivot opening for receiving shafts are disposed at the second operative end portion of the first and second arms. Further, a sensor, a convertor, a processor and a display are disposed in the housing, wherein the sensor measures angular displacement of at least one of the first and second rotatable members, the convertor the measured angular displacement into a digital format and the processor receives, stores and processes the digital data into the user-defined format, which may be one of a length between the point tips of the first and second arms and angle between the first and second arms. The display unit displays the processed digitized angular displacement data in the user-defined format.

No. of Pages : 28 No. of Claims : 7

(12) PATENT APPLICATION PUBLICATION
(21) Application No.3348/MUM/2013 A
(19) INDIA
(22) Date of filing of Application :24/10/2013
(43) Publication Date : 17/07/2015

(54) Title of the invention : FLUIDIZED BED COMBUSTION THERMIC FLUID HEATER WITH INTERNAL GAS RE-CIRCULATION SYSTEM •

| | |
|---|---|
| (51) International classification | :F23C10/10, F23C9/00 |
| (31) Priority Document No | :NA |
| (32) Priority Date | :NA |
| (33) Name of priority country | :NA |
| (86) International Application No | :NA |
| Filing Date | :NA |
| (87) International Publication No | : NA |
| (61) Patent of Addition to Application Number | :NA |
| Filing Date | :NA |
| (62) Divisional to Application Number | :NA |
| Filing Date | :NA |

(71)**Name of Applicant :**
**1)ISOTEX CORPORATION PVT. LTD.**
Address of Applicant :181 / 2&3, 178/1/C GIDC, Naroda Industrial Estate, Naroda, Ahmedabad Gujarat India
(72)**Name of Inventor :**
**1)VADODARIA, Rajeshbhai B**
**2)VADODARIA, Karan B**

(57) Abstract :
An improved fluidized bed combustion thermic fluid heater with internal gas re-circulation system (100) which facilitates the cooling by using re-circulated flue gas which replaces greater amount of excess air which is normally required to maintain bed temperature as the said flue gas has high heat capacity than air to carry more heat away from the fuel bed maintaining the bed temperature within safe operation limit also significantly increasing the thermal efficiency making the entire system highly efficient.

No. of Pages : 22 No. of Claims : 13

(12) PATENT APPLICATION PUBLICATION
(21) Application No.3349/MUM/2013 A
(19) INDIA
(22) Date of filing of Application :24/10/2013
(43) Publication Date : 17/07/2015

(54) Title of the invention : PROCESS FOR PREPARATION OF HIGH COMPRESSIVE STRENGTH AND LOW COST CONCRETE USING HYPO-SLUDGE

| | |
|---|---|
| (51) International classification | :C11D11/00, C08F216/14, C08F222/06 |
| (31) Priority Document No | :NA |
| (32) Priority Date | :NA |
| (33) Name of priority country | :NA |
| (86) International Application No | :NA |
| Filing Date | :NA |
| (87) International Publication No | : NA |
| (61) Patent of Addition to Application Number | :NA |
| Filing Date | :NA |
| (62) Divisional to Application Number | :NA |
| Filing Date | :NA |

(71)**Name of Applicant :**
**1)PARUL AROGYA SEVA MANDAL**
Address of Applicant :P.O. LIMDA, TA: WAGHODIA, DIST: VADODARA. PIN-391 760, GUJARAT, INDIA
(72)**Name of Inventor :**
**1)KAMDAR, BHOOMI**
**2)THAKKAR, KOMAL**
**3)GANDHI, PRANALI**
**4)MATHIAS, DENZIL**
**5)SHAH, DHAWANI**
**6)KULKARNI, SUHASINI**

(57) Abstract :
A process for preparation of low cost concrete by blending cement with hypo-sludge is disclosed here. This innovation, when implemented, will mitigate the disposal and pollution problems due to hypo-sludge and help developing high strength green concrete. To make good quality paper limited number of times recycled paper fibers can be used which produces a large amount of solid waste. The innovative use of fnpo-sludge in concrete formulations as a supplementary cemenlitious material was tested as an alternative to traditional concrete. The cement has been replaced by waste paper sludge in the range of 0 (without hypo-sludge). 10. 20. 30 and 40 wt%of Hypo-Sludge. M-25. Concrete mixtures were produced, tested alter preparing test specimens. The test results were compared in terms of compressive strength and split tensile strength with those of conventional concrete. These tests were carried out to evaluate the mechanical properties of the cement and hypo-sludge composites up to 28 days of curing. The lest results indicated that the compressive strength increased by the addition of hypo-sludge up to 30 wl%. And a further increase in hypo sludge reduced the strength gradually. An optimum concentration of hypo-sludge for partial replacement of cement was arrived at.

No. of Pages : 9 No. of Claims : 7

(12) PATENT APPLICATION PUBLICATION
(21) Application No.3350/MUM/2013 A
(19) INDIA
(22) Date of filing of Application :24/10/2013
(43) Publication Date : 17/07/2015

(54) Title of the invention : AN IMPROVED METHOD TO PREVENT COLLISION BETWEEN TWO TRAINS WITH THE HELP OF IMAGE PROCESSING AND APPLICATION OF IMMEDIATE AUTOMATIC BRAKING

| | |
|---|---|
| (51) International classification | :H04B7/185, B61L27/00, B61L25/02 |
| (31) Priority Document No | :NA |
| (32) Priority Date | :NA |
| (33) Name of priority country | :NA |
| (86) International Application No | :NA |
| Filing Date | :NA |
| (87) International Publication No | : NA |
| (61) Patent of Addition to Application Number | :NA |
| Filing Date | :NA |
| (62) Divisional to Application Number | :NA |
| Filing Date | :NA |

(71)**Name of Applicant :**
**1)PARUL AROGYA SEVA MANDAL**
Address of Applicant :P.O. LIMDA, TA: WAGHODIA, DIST: VADODARA. PIN-391 760, GUJARAT, INDIA.
(72)**Name of Inventor :**
**1)SHAH, FENIL**
**2)MISHRA, SHAILENDRA**
**3)PANDYA, MANISH**

(57) Abstract :
This project is about the shortcomings of existing collision detection systems and how they can be addressed through a more sophisticated and smarter collision detection system that can be developed and applied in real while taking advantage of various technologies 21st sanctuary has to offer this world. Existing collision detection systems are hugely dependent on GPS technology that has native accuracy and satellite connectivity issues in various weather conditions. The other popular existing anti-collision system relies on RFID technology which has a native limitation to detect only a single tag and hence cannot guarantee desired results in various real life situations without having it applied along with other technologies, which can further add to the cost of development. The goal of this project was to design and fabricate a fully functional, low cost, more robust and smarter collision detection system that can be used by modern rail systems. This can be aptly achieved through Image Processing Technology and Immediate Automatic Braking Mechanism.

No. of Pages : 10 No. of Claims : 9

(12) PATENT APPLICATION PUBLICATION
(19) INDIA
(22) Date of filing of Application :25/10/2013
(21) Application No.3382/MUM/2013 A
(43) Publication Date : 17/07/2015

(54) Title of the invention : AUTOMATED GENERATION AND DYNAMIC UPDATE OF RULES

| | |
|---|---|
| (51) International classification | :G06F17/00, G06Q20/00 |
| (31) Priority Document No | :NA |
| (32) Priority Date | :NA |
| (33) Name of priority country | :NA |
| (86) International Application No | :NA |
| Filing Date | :NA |
| (87) International Publication No | : NA |
| (61) Patent of Addition to Application Number | :NA |
| Filing Date | :NA |
| (62) Divisional to Application Number | :NA |
| Filing Date | :NA |

(71)**Name of Applicant :**
**1)TATA CONSULTANCY SERVICES LIMITED**
Address of Applicant :Nirmal Building, 9th Floor, Nariman Point, Mumbai, Maharashtra 400021 India
(72)**Name of Inventor :**
**1)TEWARI, Tanmaya**
**2)DEY, Surath Kumar**
**3)CHATTERJEE, Swarup**

(57) Abstract :
The present subject matter relates to monitoring of an environment using data trend analysis. The method comprises obtaining at least one data trend pertaining to at least one data stream for a pre-defined period of time. The at least one data trend is indicative of a pattern followed by the at least one data stream. Further, at least one delta value pertaining to the at least one data stream may be computed, the at least one delta value being indicative of a deviation in the at least one data stream with respect to the at least one data trend at a specific time instance. Furthermore, at least one relationship between a plurality of data streams is identified based on the at least one data trend and identity metadata associated with each data stream. Based on the at least one delta value and the at least one relationship, at least one rule is generated.

No. of Pages : 26 No. of Claims : 13

(12) PATENT APPLICATION PUBLICATION
(19) INDIA
(22) Date of filing of Application :26/10/2013
(21) Application No.3383/MUM/2013 A
(43) Publication Date : 17/07/2015

(54) Title of the invention : COMPUTER-IMPLEMENTED METHOD OF TREE CENSUS

(51) International classification :G06F17/30
(31) Priority Document No :NA
(32) Priority Date :NA
(33) Name of priority country :NA
(86) International Application No :NA
Filing Date :NA
(87) International Publication No : NA
(61) Patent of Addition to Application Number :NA
Filing Date :NA
(62) Divisional to Application Number :NA
Filing Date :NA

(71)**Name of Applicant :**
**1)Smart Survey**
Address of Applicant :Plot no. 21, Shailesh Society, Ramleela Bunglow, Karve Nagar, Pune 411052, Maharashtra, India
(72)**Name of Inventor :**
**1)Mandar Ashok VELANKAR**
**2)Sandeep Sukhadeo JADHAV**
**3)Sandeep Avinash GOHAD**

(57) Abstract :
Disclosed is a computer implemented method and system for generating an assessment report of tree census in a geographical region. The method may synchronize data captured via an electronic device with the system. The method may determine a periphery of the geographical region based on the coordinates. The method may compute a surface area of the geographical region. The method may further compare a count of the plurality of trees in the geographical region with a reference value. The method may identify a species of each tree in the geographical region. The method may generate the assessment report depicting variance in the count of the plurality of trees and the species of each tree.

No. of Pages : 21 No. of Claims : 8

(12) PATENT APPLICATION PUBLICATION
(21) Application No.3385/MUM/2013 A
(19) INDIA
(22) Date of filing of Application :28/10/2013
(43) Publication Date : 17/07/2015

(54) Title of the invention : DRIP IRRIGATION HOSE WITH OUTBOARD PARALLEL INLETS

| | | |
|---|---|---|
| (51) International classification | :A01G25/02 | (71)**Name of Applicant :** |
| (31) Priority Document No | :NA | **1)JAIN IRRIGATION SYSTEMS LTD.** |
| (32) Priority Date | :NA | Address of Applicant :JAIN PLASTIC PARK, NH NO 6, |
| (33) Name of priority country | :NA | BAMBHORI, JALGAON - 425001 Maharashtra India |
| (86) International Application No | :NA | (72)**Name of Inventor :** |
| Filing Date | :NA | **1)AJIT BHAVARLAL JAIN** |
| (87) International Publication No | : NA | **2)MICHAEL DEFRANK** |
| (61) Patent of Addition to Application Number | :NA | **3)ARIC OLSON** |
| Filing Date | :NA | **4)MARK WYNN** |
| (62) Divisional to Application Number | :NA | |
| Filing Date | :NA | |

(57) Abstract :
Disclosed is a drip irrigation hose with an emitter, devoid of fluid storage, the emitter comprising, a plurality of holes, running along a first edge and a second edge of the emitter, wherein the plurality of holes enable filtration. An inlet support positioned at a first side of the emitter, wherein the inlet support has an inverted funnel shape, with a separating structure extending from at least one corner of the inverted funnel. A first inlet positioned parallel to the plurality of holes and located along the first edge. A second inlet positioned parallel to the plurality of holes and located along the second edge. Further an outlet support positioned at a second side of the emitter.

No. of Pages : 12 No. of Claims : 8

(12) PATENT APPLICATION PUBLICATION
(19) INDIA
(22) Date of filing of Application :28/10/2013
(21) Application No.3386/MUM/2013 A
(43) Publication Date : 17/07/2015

(54) Title of the invention : A LOW FLOW EMITTER WITH ECHELON SHAPED TEETH.

| | |
|---|---|
| (51) International classification | :B60L11/02, B60W10/08, B60N 2/00 |
| (31) Priority Document No | :NA |
| (32) Priority Date | :NA |
| (33) Name of priority country | :NA |
| (86) International Application No | :NA |
| Filing Date | :NA |
| (87) International Publication No | : NA |
| (61) Patent of Addition to Application Number | :NA |
| Filing Date | :NA |
| (62) Divisional to Application Number | :NA |
| Filing Date | :NA |

(71)**Name of Applicant :**
**1)JAIN IRRIGATION SYSTEMS LIMITED**
Address of Applicant :JAIN PLASTIC PARK, NH NO.6, BANBHORI, JALGAON-425001 Maharashtra India
(72)**Name of Inventor :**
**1)AJIT BHAVARLAL JAIN**
**2)MICHAEL PATRICK DEFRANK**

(57) Abstract :
Disclosed is an emitter comprising a plurality of holes 106, running along a first edge 102 and a second edge 104 of the emitter. The emitter 100 may further comprise of an echelon shaped teeth portion 114. The echelon shaped teeth portion may run parallel to the first edge 102 and the second edge 104. Further the echelon shaped teeth portion 114 at least partially extends between the first side 110 and the second side 112.

No. of Pages : 24 No. of Claims : 5

(12) PATENT APPLICATION PUBLICATION
(21) Application No.3402/MUM/2013 A
(19) INDIA
(22) Date of filing of Application :29/10/2013
(43) Publication Date : 17/07/2015

(54) Title of the invention : A PROCESS FOR THE PREPARATION OF 1, 3-DIARYL-(1H, 3H)-6-METHYLPYRIMIDINE-2, 4-DIONES UNDER MICROWAVE IRRADIATION.

| | |
|---|---|
| (51) International classification | :C07D419/04, C07D498/04, C07D417/04 |
| (31) Priority Document No | :NA |
| (32) Priority Date | :NA |
| (33) Name of priority country | :NA |
| (86) International Application No | :NA |
| Filing Date | :NA |
| (87) International Publication No | : NA |
| (61) Patent of Addition to Application Number | :NA |
| Filing Date | :NA |
| (62) Divisional to Application Number | :NA |
| Filing Date | :NA |

(71)**Name of Applicant :**
**1)DR. M. M. V.RAMANA**
Address of Applicant :DEPARTMENT OF CHEMISTRY, UNIVERSITY OF MUMBAI, VIDYANAGARI, SANTACRUZ (EAST), MUMBAI - 400 098,. Maharashtra India
(72)**Name of Inventor :**
**1)DR. M. M. V.RAMANA**
**2)DR. SANJAY C. PAWAR**

(57) Abstract :
This invention describes the synthesis of 1, 3-diatyl-(lH, 3H)-6-methylpyrimidine-2, 4-diones by Chapman rearrangement of 2, 4-diaryloxy 6-methylpyrimidines under microwave irradiation.

No. of Pages : 12 No. of Claims : 9

(12) PATENT APPLICATION PUBLICATION
(19) INDIA
(22) Date of filing of Application :29/10/2013
(21) Application No.3403/MUM/2013 A
(43) Publication Date : 17/07/2015

(54) Title of the invention : A PROCESS FOR THE PREPARATION OF 1, 3-DIARYL- (1H, 3H)-PYRIMIDINE-2, 4-DIONES.

(51) International classification :C07D513/04
(31) Priority Document No :NA
(32) Priority Date :NA
(33) Name of priority country :NA
(86) International Application No :NA
Filing Date :NA
(87) International Publication No : NA
(61) Patent of Addition to Application Number :NA
Filing Date :NA
(62) Divisional to Application Number :NA
Filing Date :NA

(71)**Name of Applicant :**
**1)DR. M. M. V.RAMANA**
Address of Applicant :DEPARTMENT OF CHEMISTRY, UNIVERSITY OF MUMBAI, VIDYANAGARI, SANTACRUZ (EAST), MUMBAI-400098, INDIA. Maharashtra India
(72)**Name of Inventor :**
**1)DR. M. M. V.RAMANA**
**2)DR. SANJAY C. PAWAR**

(57) Abstract :
This invention describes the preparation of 1, 3-diaryl-(lH, 3H)-pyrimidine-2, 4-diones by Chapman rearrangement of 2, 4-diaryloxypyrimidines.

No. of Pages : 12 No. of Claims : 9

(12) PATENT APPLICATION PUBLICATION
(21) Application No.3407/MUM/2013 A
(19) INDIA
(22) Date of filing of Application :29/10/2013
(43) Publication Date : 17/07/2015

(54) Title of the invention : SYSTEM(S) AND METHOD(S) TO FACILITATE DATA PROCESSING FOR PREDICTING MEDICAL DISORDERS

(51) International classification :G06F19/00
(31) Priority Document No :NA
(32) Priority Date :NA
(33) Name of priority country :NA
(86) International Application No :NA
Filing Date :NA
(87) International Publication No : NA
(61) Patent of Addition to Application Number :NA
Filing Date :NA
(62) Divisional to Application Number :NA
Filing Date :NA

(71)**Name of Applicant :**
**1)TATA CONSULTANCY SERVICES LIMITED**
Address of Applicant :NIRMAL BUILDING, 9TH FLOOR, NARIMAN POINT, MUMBAI 400021, MAHARASHTRA, INDIA
(72)**Name of Inventor :**
**1)AHAMED, SYED AZAR**
**2)VIJAYAKUMAR, SENTHILKUMAR**
**3)KUMAR, ROHIT**

(57) Abstract :
System and method to facilitate prediction of neurological disorders is disclosed. System comprises distributed databases to store medical data and processors linked to cloud platform for accessing data stored in distributed databases. System applies statistical processing technique on data to generate statistical data which comprises genetic variables and neural images and applies regression technique on statistical data to prepare correlations between genetic variables and neural images to obtain first set of values. System filters first set of values to obtain statistical significant values and generates dataset based on first set of values, statistical significant values and prescription data. System accepts dataset, develops supervised learned methodology to derive data patterns. Supervised learned methodology is technique to identify abnormal statistical data representing disorder. Data patterns are abnormal statistical values representing disorder. System maps data patterns to pre-stored neurological disorder data to identify abnormal statistical values from data pattern to predict neurological disorder.

No. of Pages : 63 No. of Claims : 19

(12) PATENT APPLICATION PUBLICATION
(21) Application No.3409/MUM/2013 A
(19) INDIA
(22) Date of filing of Application :29/10/2013
(43) Publication Date : 17/07/2015

(54) Title of the invention : A MULTISTAGE LOAD DEMAND-DEPENDANT ADAPTIVE POWER MANAGEMENT SYSTEM FOR CHARGING BATTERY

(51) International classification :G06F19/00
(31) Priority Document No :NA
(32) Priority Date :NA
(33) Name of priority country :NA
(86) International Application No :NA
Filing Date :NA
(87) International Publication No : NA
(61) Patent of Addition to Application Number :NA
Filing Date :NA
(62) Divisional to Application Number :NA
Filing Date :NA

(71)**Name of Applicant :**
**1)CROMPTON GREAVES LIMITED**
Address of Applicant :CG HOUSE, 6TH FLOOR, DR. ANNIE BESANT ROAD, WORLI, MUMBAI 400 030, MAHARASHTRA, INDIA.
(72)**Name of Inventor :**
**1)WACHASUNDAR SHRIPAD**

(57) Abstract :
A multistage load demand-dependant adaptive power management system for charging battery comprises: at least a battery sensor adapted to sense battery condition; at least a loads sensor adapted to sense load condition; at least a first voltage defining means adapted to define a first pre-defined voltage value in order to invoke a first function of charging in order to start charging the battery; at least a second voltage defining means adapted to define a second pre-defined voltage value in order to invoke a second function of charging in order to continue charging of the battery; at least a first current defining means adapted to define a first pre-defined current value in order to invoke a third function of charging in order to continue charging of the battery as well as to drive the load / mains; at least a third voltage defining means adapted to define a third predefined voltage value in order to invoke a fourth function of charging and also the second function with very less current; and at least a determination mechanism adapted to determine a state of mode of operation of the system and method depending upon sensed load condition and sensed battery condition in correlation with first pre-defined voltage, second pre-defined voltage, third predefined voltage, and fourth pre-defined voltage, characterized, in that, said state of mode of operation is at least a mode selectable from a group of modes consisting of at least a Maximum Power Point Tracking mode, at least a Constant Voltage mode, at least a Constant Current mode, and at least a Float mode.

No. of Pages : 24 No. of Claims : 15

(12) PATENT APPLICATION PUBLICATION
(21) Application No.3122/MUM/2013 A
(19) INDIA
(22) Date of filing of Application :30/09/2013
(43) Publication Date : 17/07/2015

(54) Title of the invention : AMORPHOUS FORM OF LEVOMILNACIPRAN HYDROCHLORIDE AND HYDRATES THEREOF •

| | |
|---|---|
| (51) International classification | :C07C237/30, A61K31/165 |
| (31) Priority Document No | :NA |
| (32) Priority Date | :NA |
| (33) Name of priority country | :NA |
| (86) International Application No | :NA |
| Filing Date | :NA |
| (87) International Publication No | : NA |
| (61) Patent of Addition to Application Number | :NA |
| Filing Date | :NA |
| (62) Divisional to Application Number | :NA |
| Filing Date | :NA |

(71)**Name of Applicant :**
**1)CADILA HEALTHCARE LIMITED**
Address of Applicant :Zydus Tower, Satellite Cross Road, Ahmedabad 380 015, Gujarat, India,
(72)**Name of Inventor :**
**1)DWIVEDI, Shri Prakash Dhar**
**2)KHERA Brij**

(57) Abstract :
The present invention provides an amorphous form of levomilnacipran hydrochloride and process of preparation thereof. The present invention also provides an amorphous solid dispersion comprising levomilnacipran hydrochloride and a polymer.

No. of Pages : 18 No. of Claims : 19

(12) PATENT APPLICATION PUBLICATION
(21) Application No.3123/MUM/2013 A
(19) INDIA
(22) Date of filing of Application :30/09/2013
(43) Publication Date : 17/07/2015

(54) Title of the invention : AMORPHOUS FORM OF ENZALUTAMIDE •

| | |
|---|---|
| (51) International classification | :C07D233/86, A61K31/4164 |
| (31) Priority Document No | :NA |
| (32) Priority Date | :NA |
| (33) Name of priority country | :NA |
| (86) International Application No | :NA |
| Filing Date | :NA |
| (87) International Publication No | : NA |
| (61) Patent of Addition to Application Number | :NA |
| Filing Date | :NA |
| (62) Divisional to Application Number | :NA |
| Filing Date | :NA |

(71)**Name of Applicant :**
**1)CADILA HEALTHCARE LIMITED**
Address of Applicant :Zydus Tower, Satellite Cross Road, Ahmedabad 380 015, Gujarat, India,
(72)**Name of Inventor :**
**1)DWIVEDI, Shri Prakash Dhar**
**2)SINGH Kumar Kamlesh**
**3)KHERA Brij**

(57) Abstract :
The present invention relates to an amorphous form of enzalutamide. In particular, the invention relates to a process for the preparation of an amorphous form of enzalutamide. The invention also relates to pharmaceutical compositions comprising therapeutically effective amount of an amorphous form of enzalutamide for oral administration as an anticancer agent.

No. of Pages : 23 No. of Claims : 9

(12) PATENT APPLICATION PUBLICATION
(21) Application No.3129/MUM/2013 A
(19) INDIA
(22) Date of filing of Application :01/10/2013
(43) Publication Date : 17/07/2015

(54) Title of the invention : COPY-MOVE FORGERY DETECTION IN DIGITAL IMAGES

(51) International classification :G06T7/00
(31) Priority Document No :NA
(32) Priority Date :NA
(33) Name of priority country :NA
(86) International Application No :NA
Filing Date :NA
(87) International Publication No : NA
(61) Patent of Addition to Application Number :NA
Filing Date :NA
(62) Divisional to Application Number :NA
Filing Date :NA

(71)**Name of Applicant :**
**1)MRS. KULKARNI VAISHALI SHRINIVAS**
Address of Applicant :FLAT NO. K-13, DWARKADHEESH RESIDENCY, PIMPLE SAUDAGAR, PUNE 411 027 Maharashtra India
(72)**Name of Inventor :**
**1)MRS. KULKARNI VAISHALI SHRINIVAS**
**2)DR. CHAVAN YASHWANT VITTHALRAO**

(57) Abstract :
Copy-move forgery is a type of image corrupting, presenting and hiding its originality. In this image forgery detection is worked out. A novel method based on Scale Invariant Feature Transform (SIFT) is used to extract the features in order to locate the key-points in the image. These key-points are the basis of determining image tampering. The hierarchical clustering approach is used for this detection. This work has been tested for test image having identical contents within the image and other for copying and putting some of the contents in the same image.

No. of Pages : 6 No. of Claims : 8

(12) PATENT APPLICATION PUBLICATION
(19) INDIA
(22) Date of filing of Application :30/10/2013
(21) Application No.3420/MUM/2013 A
(43) Publication Date : 17/07/2015

(54) Title of the invention : SPRING MECHANISM

| | |
|---|---|
| (51) International classification | :B60G17/052, G05G5/05, G05G5/00 |
| (31) Priority Document No | :NA |
| (32) Priority Date | :NA |
| (33) Name of priority country | :NA |
| (86) International Application No | :NA |
| Filing Date | :NA |
| (87) International Publication No | : NA |
| (61) Patent of Addition to Application Number | :NA |
| Filing Date | :NA |
| (62) Divisional to Application Number | :NA |
| Filing Date | :NA |

(71)**Name of Applicant :**
**1)PUROHIT SATISH BALKRISHNA**
Address of Applicant :32/1, NORTH RAJMOHALLA, STREET NO. 1, INDORE-452002, MADHYA PRADESH, INDIA
(72)**Name of Inventor :**
**1)PUROHIT SATISH BALKRISHNA**
**2)LAPALIKAR SUBHASH RAMCHANDRA**
**3)MAHESHWARI RANJEETA JAGDISH**

(57) Abstract :
A spring mechanism for providing stiffness as well as damping effect is disclosed. The spring mechanism includes a hollow non-magnetic tube, a helical spring, a ferrofluid and a magnetic field. The helical spring incased in the hollow non-magnetic tube. The ferrofluid is disposed inside the hollow non-magnetic tube and adapted to flow inside the hollow non-magnetic tube. The magnetic field is applied to the ferrofluid. From a distance of free length of the helical spring attractive force between the ferrofluid is minimum, when load is applied to the spring mechanism, the spring mechanism gets compressed and thereby increasing magnetic attraction between the ferrofluid, due to increased magnetic attraction - viscosity of the ferrofluid increases and thereby the spring mechanism provides stiffness as well as damping effect.

No. of Pages : 23 No. of Claims : 9

(12) PATENT APPLICATION PUBLICATION
(21) Application No.3421/MUM/2013 A
(19) INDIA
(22) Date of filing of Application :30/10/2013
(43) Publication Date : 17/07/2015

(54) Title of the invention : PHARMACEUTICAL COMPOSITIONS COMPRISING ANTIBACTERIAL AGENTS

| | |
|---|---|
| (51) International classification | :A61K31/407, A61K31/43, A61K31/04 |
| (31) Priority Document No | :NA |
| (32) Priority Date | :NA |
| (33) Name of priority country | :NA |
| (86) International Application No | :NA |
| Filing Date | :NA |
| (87) International Publication No | : NA |
| (61) Patent of Addition to Application Number | :NA |
| Filing Date | :NA |
| (62) Divisional to Application Number | :NA |
| Filing Date | :NA |

(71)**Name of Applicant :**
**1)WOCKHARDT LIMITED**
Address of Applicant :D-4, MIDC Area, Chikalthana, Aurangabad Maharashtra India
(72)**Name of Inventor :**
**1)Bhagwat,Sachin**
**2)Patel,Mahesh Vithalbhai**

(57) Abstract :
Pharmaceutical compositions comprising: (a) a beta-lactam compound selected from sulbactam, cefepime or a pharmaceutically acceptable derivative thereof, and (b) a compound of Formula (I) or a stereoisomer or a pharmaceutically acceptable derivative thereof are disclosed.

No. of Pages : 28 No. of Claims : 15

(12) PATENT APPLICATION PUBLICATION
(21) Application No.3422/MUM/2013 A
(19) INDIA
(22) Date of filing of Application :30/10/2013
(43) Publication Date : 17/07/2015

(54) Title of the invention : PHARMACEUTICAL COMPOSITION COMPRISING ANTIBACTERIAL AGENTS

| | |
|---|---|
| (51) International classification | :A61K31/407, A61K31/43, A61K31/05 |
| (31) Priority Document No | :NA |
| (32) Priority Date | :NA |
| (33) Name of priority country | :NA |
| (86) International Application No | :NA |
| Filing Date | :NA |
| (87) International Publication No | : NA |
| (61) Patent of Addition to Application Number | :NA |
| Filing Date | :NA |
| (62) Divisional to Application Number | :NA |
| Filing Date | :NA |

(71)**Name of Applicant :**
**1)WOCKHARDT LIMITED**
Address of Applicant :D-4, MIDC Area, Chikalthana, Aurangabad Maharashtra India
(72)**Name of Inventor :**
**1)Bhagwat,Sachin**
**2)Patel,Mahesh Vithalbhai**

(57) Abstract :
Pharmaceutical compositions comprising sulbactam or a pharmaceutically acceptable derivative, and a compound of Formula (I) or a stereoisomer or a pharmaceutically acceptable derivative thereof are disclosed.

No. of Pages : 28 No. of Claims : 14

(12) PATENT APPLICATION PUBLICATION
(21) Application No.3176/MUM/2013 A
(19) INDIA
(22) Date of filing of Application :07/10/2013
(43) Publication Date : 17/07/2015

(54) Title of the invention : A SYSTEM TO DEVELOP, ANALYZE AND OPTIMIZE THE ULTRASONIC TECHNOLOGY

(51) International classification :C22B9/05
(31) Priority Document No :NA
(32) Priority Date :NA
(33) Name of priority country :NA
(86) International Application No :NA
Filing Date :NA
(87) International Publication No : NA
(61) Patent of Addition to Application Number :NA
Filing Date :NA
(62) Divisional to Application Number :NA
Filing Date :NA

(71)**Name of Applicant :**
**1)KEDAR NITINBHAI BHOJAK**
Address of Applicant :49, NAYAK NAGAR SOCIETY, NEAR SARDAR PATEL COLONY, POST : NAVJEEVAN, AHMEDABAD-380 014, GUJARAT STATE, INDIA.
**2)ALKESH MANOJKUMAR MAVANI**
(72)**Name of Inventor :**
**1)KEDAR NITINBHAI BHOJAK**
**2)ALKESH MANOJKUMAR MAVANI**

(57) Abstract :
The present invention relates to a system (1) to develop, analyze and optimize the ultrasonic technology which includes analysis and optimization of metallurgical and thermal behavior of molten alloyed aluminum for ultrasonic degassing process for direct chilled castings of aerospace aluminum alloys.

No. of Pages : 13 No. of Claims : 9

(12) PATENT APPLICATION PUBLICATION
(21) Application No.3410/MUM/2013 A
(19) INDIA
(22) Date of filing of Application :29/10/2013
(43) Publication Date : 17/07/2015

(54) Title of the invention : A PHONE LINE SENSING MECHANISM.

| | | |
|---|---|---|
| (51) International classification | :H04M11/04, G06F3/041 | (71)**Name of Applicant :** **1)GUPTA PURUSHOTTAM** Address of Applicant :45 JHANAVI BUNGALOWS, OPP. GOVT. TUBEWELL, BOPAL, AHMEDABAD, GUJARAT, 380058, INDIA |
| (31) Priority Document No | :NA | |
| (32) Priority Date | :NA | |
| (33) Name of priority country | :NA | |
| (86) International Application No | :NA | (72)**Name of Inventor :** **1)GUPTA NIDHI** |
| Filing Date | :NA | |
| (87) International Publication No | : NA | |
| (61) Patent of Addition to Application Number | :NA | |
| Filing Date | :NA | |
| (62) Divisional to Application Number | :NA | |
| Filing Date | :NA | |

(57) Abstract :
A phone line sensing mechanism comprising: at least a sensing means adapted to sense phone line; and at least an indicating means adapted to indicate when the sensor senses the phone line to be good and active and / or adapted to indicate when the sensor senses the phone line to bad and inactive.

No. of Pages : 11 No. of Claims : 10

(12) PATENT APPLICATION PUBLICATION
(19) INDIA
(22) Date of filing of Application :29/10/2013
(21) Application No.3411/MUM/2013 A
(43) Publication Date : 17/07/2015

(54) Title of the invention : A PRE-INSTALLED BOTTLE PUNCTURING MECHANISM, AND BOTTLE THEREOF.

| | |
|---|---|
| (51) International classification | :A47J36/24, A47J36/28 |
| (31) Priority Document No | :NA |
| (32) Priority Date | :NA |
| (33) Name of priority country | :NA |
| (86) International Application No | :NA |
| Filing Date | :NA |
| (87) International Publication No | : NA |
| (61) Patent of Addition to Application Number | :NA |
| Filing Date | :NA |
| (62) Divisional to Application Number | :NA |
| Filing Date | :NA |

(71)**Name of Applicant :**
**1)CHOUDHURY SNIGDHENDU BIKASH**
Address of Applicant :QRT. NO. 505, SECTOR-2, VFJ ESTATE, P. O. JABALPUR - 482009, MADHYA PRADESH, INDIA
(72)**Name of Inventor :**
**1)CHOUDHURY SHIBAJYOTI**
**2)CHOUDHURY RAJASHREE**

(57) Abstract :
A pre-installed bottle puncturing mechanism, and bottle thereof, in order to stop reusing of used bottles, said bottle comprising: at least a two-chambered bottle comprising an operative upper chamber and an operative lower chamber; at least a separator adapted to separate said operative upper chamber from said operative lower chamber; and an auxiliary opening mechanism, other than the normal opening mechanism in order to open up or tear up or puncture the bottle after at least a first use, characterised, in that, said auxiliary opening mechanism comprising a pin type device attached at the bottom part of said bottle and further extending to and also being attached to said separator.

No. of Pages : 13 No. of Claims : 5

(12) PATENT APPLICATION PUBLICATION
(19) INDIA
(22) Date of filing of Application :29/10/2013
(21) Application No.3412/MUM/2013 A
(43) Publication Date : 17/07/2015

(54) Title of the invention : A WEARABLE AIR-CONDITIONING APPARATUS FOR MOTORCYCLE RIDERS

| | |
|---|---|
| (51) International classification | :F25D5/00, F25D5/02 |
| (31) Priority Document No | :NA |
| (32) Priority Date | :NA |
| (33) Name of priority country | :NA |
| (86) International Application No | :NA |
| Filing Date | :NA |
| (87) International Publication No | : NA |
| (61) Patent of Addition to Application Number | :NA |
| Filing Date | :NA |
| (62) Divisional to Application Number | :NA |
| Filing Date | :NA |

(71)**Name of Applicant :**
**1)PATEL MD. HANIF AYYUB**
Address of Applicant :OPP. AMAN COTTAGE, PLOT NO. 43, S.NO.12, LAXMI NAGAR, NEAR AASHA COMPLEX, KHADKA ROAD, BHUSAWAL, AT. POST. BHUSAWAL, DIST. JALGAON, MAHARASHTRA 425201, INDIA
(72)**Name of Inventor :**
**1)PATEL MASIRA BI HANIF**

(57) Abstract :
A wearable air-conditioning apparatus, coupled with at least a motorcycle, for motorcycle riders comprising: at least a wearable jacket for motorcycle riders; at least an air conditioning compressor adapted to provide conditioned air to the wearable jacket; at least an evaporator adapted to be comrnunicably coupled with at least a condenser and located in communication with said jacket, said evaporator receiving refrigerant from said compressor; fan blades are attached with a wheel of said motorcycle for throwing air over said condenser.

No. of Pages : 16 No. of Claims : 11

(12) PATENT APPLICATION PUBLICATION
(19) INDIA
(22) Date of filing of Application :29/10/2013
(21) Application No.3417/MUM/2013 A
(43) Publication Date : 17/07/2015

(54) Title of the invention : A METHOD OF PREPARING FERMENTABLE SUGARS FROM BIOMASS RESOURCES

(51) International classification :C12P19/14
(31) Priority Document No :NA
(32) Priority Date :NA
(33) Name of priority country :NA
(86) International Application No :NA
Filing Date :NA
(87) International Publication No : NA
(61) Patent of Addition to Application Number :NA
Filing Date :NA
(62) Divisional to Application Number :NA
Filing Date :NA

(71)**Name of Applicant :**
**1)Indian Oil Corporation Limited**
Address of Applicant :G-9, Ali Yavar Jung Marg, Bandra (East), Mumbai-400 051 (IN) Maharashtra India
(72)**Name of Inventor :**
**1)KUMAR, Ravindra**
**2)SATLEWAL, Alok**
**3)GUPTA, Ravi Prakash**
**4)TULI, Deepak Kumar**
**5)MALHOTRA, Ravinder Kumar**

(57) Abstract :
The present invention relates to a method of preparing fermentable sugars from biomass resources.

No. of Pages : 17 No. of Claims : 13

(12) PATENT APPLICATION PUBLICATION
(21) Application No.3155/MUM/2013 A
(19) INDIA
(22) Date of filing of Application :04/10/2013
(43) Publication Date : 17/07/2015

(54) Title of the invention : A PROCESS FOR THE PREPARATION OF NILUTAMIDE AND TRIETHYLENEMELAMINE.

| | |
|---|---|
| (51) International classification | :C07D 471/04, C07D 401/14 |
| (31) Priority Document No | :NA |
| (32) Priority Date | :NA |
| (33) Name of priority country | :NA |
| (86) International Application No | :NA |
| Filing Date | :NA |
| (87) International Publication No | : NA |
| (61) Patent of Addition to Application Number | :NA |
| Filing Date | :NA |
| (62) Divisional to Application Number | :NA |
| Filing Date | :NA |

(71)**Name of Applicant :**
**1)DR. M. M. V.RAMANA**
Address of Applicant :DEPARTMENT OF CHEMISTRY, UNIVERSITY OF MUMBAI, VIDYANAGARI, SANTACRUZ (EAST), MUMBAI-400 098, MAHARASHTRA, INDIA. Maharashtra India
(72)**Name of Inventor :**
**1)DR. M. M. V.RAMANA**
**2)SHARMA MADHU RADHEYSHYAM**

(57) Abstract :
The present invention relates to the synthesis of Nilutamide and Triethylenemelamine by simple and eco-friendly method. The main object of the present invention is to synthesize the Nilutamide and Triethylenemelamine through N-arylation by using KF/Al2O3 under solventless and transition metal free condition.

No. of Pages : 6 No. of Claims : 3

(12) PATENT APPLICATION PUBLICATION
(19) INDIA
(22) Date of filing of Application :04/10/2013
(21) Application No.3162/MUM/2013 A
(43) Publication Date : 17/07/2015

(54) Title of the invention : VENTILATION BOARD AND A METHOD OF FORMING A VENTILATION BOARD

| | |
|---|---|
| (51) International classification | :B65D5/42, B65D81/38 |
| (31) Priority Document No | :NA |
| (32) Priority Date | :NA |
| (33) Name of priority country | :NA |
| (86) International Application No | :NA |
| Filing Date | :NA |
| (87) International Publication No | : NA |
| (61) Patent of Addition to Application Number | :NA |
| Filing Date | :NA |
| (62) Divisional to Application Number | :NA |
| Filing Date | :NA |

(71)**Name of Applicant :**
**1)VINAY K. MEHTA**
Address of Applicant :F/9, TRIVENI, 66 WALKESHWAR ROAD, MUMBAI - 400 006, MAHARASHTRA, INDIA.
(72)**Name of Inventor :**
**1)VINAY K. MEHTA**
**2)RANJITH RAJENDRA PRASAD**

(57) Abstract :
The present invention provides a ventilation board having means for splitting level of the ventilation board for providing ventilation and/or insulation. The ventilation board when used to make a panel defining an enclosed space such as a box or carton for food packaging provides sufficient ventilation and/or insulation to the box so that water condensed from food vapors does not run onto the food in the box along with sufficient insulation so that the food in the box is kept warm.

No. of Pages : 33 No. of Claims : 21

(12) PATENT APPLICATION PUBLICATION
(21) Application No.3431/MUM/2013 A
(19) INDIA
(22) Date of filing of Application :30/10/2013
(43) Publication Date : 17/07/2015

(54) Title of the invention : UNIQUE INSTALLATION OF FOLDING BERTH - FOR DAY TRUCK CABIN

| | |
|---|---|
| (51) International classification | :B60N2/42, B62D33/06, B60N2/44 |
| (31) Priority Document No | :NA |
| (32) Priority Date | :NA |
| (33) Name of priority country | :NA |
| (86) International Application No | :NA |
| Filing Date | :NA |
| (87) International Publication No | : NA |
| (61) Patent of Addition to Application Number | :NA |
| Filing Date | :NA |
| (62) Divisional to Application Number | :NA |
| Filing Date | :NA |

(71)**Name of Applicant :**
**1)AMW MOTORS LTD**
Address of Applicant :7TH FLOOR, TOWER 1, EQUINOX BUSINESS PARK, PENINSULA TECHNO PARK, OFF BANDRA KURLA COMPLEX, LBS MARG, KURLA (WEST), MUMBAI - 400070 Maharashtra India
(72)**Name of Inventor :**
**1)MR. JAGDISH B. NAIK**

(57) Abstract :
Need of berth occupant relaxing has been the requirement in the trucking operation, however it could be provided in Sleeper type of Cabins. This feature could not be packaged satisfactorily for Day a cabin which is used for short distance operations like mining & construction. The new concept has now been derived, providing Berth even for Day type Truck cabins, without any application compromise. In the said invention, Sleeper berth has been parked in the compact space, between occupant seats and the cabin rear wall, while vehicle is in operation. This location has been derived, without hampering rear visibility even through internal rear views mirror and through rear wall glass/ window opening. (Refer Fig-1). When vehicle not in operation, the Driver & co-passengers seats backs are folded down, the berth is unlocked from both the ends, lifted up, rotated and tilted forward horizontal in the sleeping position. Both the ends then supported and locked over the brackets, which have been mounted on the cabin body side walls.

No. of Pages : 7 No. of Claims : 8

(12) PATENT APPLICATION PUBLICATION
(21) Application No.3434/MUM/2013 A
(19) INDIA
(22) Date of filing of Application :30/10/2013
(43) Publication Date : 17/07/2015

(54) Title of the invention : INTERLOCKING BRICKS

| | |
|---|---|
| (51) International classification | :E04B2/04, E04B2/08, E04B2/02 |
| (31) Priority Document No | :NA |
| (32) Priority Date | :NA |
| (33) Name of priority country | :NA |
| (86) International Application No | :NA |
| Filing Date | :NA |
| (87) International Publication No | : NA |
| (61) Patent of Addition to Application Number | :NA |
| Filing Date | :NA |
| (62) Divisional to Application Number | :NA |
| Filing Date | :NA |

(71)**Name of Applicant :**
**1)RAJARAMBAPU INSTITUTE OF TECHNOLOGY**
Address of Applicant :RAJARAMNAGAR, ISLAMPUR, DIST. SANGLI -415414, MAHARASHTRA, INDIA
(72)**Name of Inventor :**
**1)ATTAR ABDULRASHID CHAND**
**2)MARUNMALE ADITYA KASHINATH**

(57) Abstract :
A mortarless interlocking brick comprises three pairs of substantially parallel opposite-faces, wherein a first face of at least one of the pair of opposite-faces comprises a projection formation comprising: a plurality of parallelly spaced apart linearly disposed ribs; and a longitudinal orthogonal connector rib intersecting each of the plurality of ribs; wherein each rib of the plurality of ribs and the longitudinal orthogonal connector rib extend and taper outwardly from the first face; and a second face opposite to the first face comprises a trough formation complementary and adapted to receive the projection formation on the first face of an adjacent interlocking brick, the trough formation comprising: a plurality of parallelly spaced apart linearly disposed troughs; and a longitudinal orthogonal connector trough intersecting each of the plurality of troughs; wherein each of the plurality of troughs and the longitudinal orthogonal connector trough extend and taper inwardly from the second face.

No. of Pages : 29 No. of Claims : 10

(12) PATENT APPLICATION PUBLICATION
(19) INDIA
(22) Date of filing of Application :12/12/2014
(21) Application No.2528/MUMNP/2014 A
(43) Publication Date : 17/07/2015

(54) Title of the invention : SURFACE COVERING SYSTEM AND METHOD FOR PRODUCING SUCH A SYSTEM

| | |
|---|---|
| (51) International classification | :E04D13/04,E04D13/16,E04F15/02 |
| (31) Priority Document No | :1250504-6 |
| (32) Priority Date | :16/05/2012 |
| (33) Name of priority country | :Sweden |
| (86) International Application No | :PCT/SE2013/050544 |
| Filing Date | :15/05/2013 |
| (87) International Publication No | :WO 2013/172775 |
| (61) Patent of Addition to Application Number | :NA |
| Filing Date | :NA |
| (62) Divisional to Application Number | :NA |
| Filing Date | :NA |

(71)**Name of Applicant :**
**1)GRADE GROUP AS**
Address of Applicant :Munkedamsveien 45C N 0250 Oslo Norway
(72)**Name of Inventor :**
**1)SJ–D‰N Tord**
**2)BOART Ulf**
**3)GUSTAVSON Morten**

(57) Abstract :
The invention relates to a surface covering system intended for a surface in the form of a wet room floor a roof or another substantially flat delimited surface which is exposed to water and needs drainage and to methods for preparing such a system. The surface covering system comprises at least one plate (1 1a 1 b 1c) with a mark (2) showing a drainage point and a substantially flat lower surface (3) and an upper surface (4) with a first decline towards the mark (2). The invention is characterised by that the first decline is circular and has a radial slope (a) directed towards the mark (2) from every point on the at least one plate (1 1a 1 b 1 c). In this way the decline creates a cavity in the plate (1 1a 1 b 1c) in the shape of at least a part of a blunt virtual cone with the apex of the cone directed towards the mark (2). This solution achieves a modular surface covering system with an even circular decline starting from the placement of the drainage point/points in a specific limited space. The invention further relates to a method for preparing such a surface covering system.

No. of Pages : 28 No. of Claims : 19

(12) PATENT APPLICATION PUBLICATION
(21) Application No.3252/MUM/2013 A
(19) INDIA
(22) Date of filing of Application :17/10/2013
(43) Publication Date : 17/07/2015

(54) Title of the invention : AN IMPROVED PRINTED CIRCUIT BOARD ASSEMBLY

(51) International classification :H01R12/00
(31) Priority Document No :NA
(32) Priority Date :NA
(33) Name of priority country :NA
(86) International Application No :NA
Filing Date :NA
(87) International Publication No : NA
(61) Patent of Addition to Application Number :NA
Filing Date :NA
(62) Divisional to Application Number :NA
Filing Date :NA

(71)**Name of Applicant :**
**1)BAJAJ AUTO LIMITED**
Address of Applicant :AKURDI, PUNE - 411035, STATE OF MAHARASHTRA, INDIA.
(72)**Name of Inventor :**
**1)HOLE RAJENDRA BHIKOBA**
**2)RAGUPATHI GOPINATH**

(57) Abstract :
This invention is related to assembly of printed circuit board particularly related to PCB assembly handling higher rating of current, wherein the two PCBs are isolated with a predefined space to avoid direct thermal transfer between each other and prevent usage of PCB mounted power connectors. The assembly having is compact.

No. of Pages : 25 No. of Claims : 18

(12) PATENT APPLICATION PUBLICATION
(19) INDIA
(22) Date of filing of Application :17/10/2013
(21) Application No.3254/MUM/2013 A
(43) Publication Date : 17/07/2015

(54) Title of the invention : NANOFIBER BASED ANTIMICROBIAL FACE MASK FOR PROTECTION AGAINST VIRUSES AND A PROCESS OF PREPARING FACE MASK THEREOF

| | |
|---|---|
| (51) International classification | :B01D53/14, B29C71/00 |
| (31) Priority Document No | :NA |
| (32) Priority Date | :NA |
| (33) Name of priority country | :NA |
| (86) International Application No | :NA |
| Filing Date | :NA |
| (87) International Publication No | : NA |
| (61) Patent of Addition to Application Number | :NA |
| Filing Date | :NA |
| (62) Divisional to Application Number | :NA |
| Filing Date | :NA |

(71)**Name of Applicant :**
**1)Ahmedabad Textile Industry™s Research Association**
Address of Applicant :P.O. Ambawadi Vistar, Ahmedabad 380015, Gujarat India
(72)**Name of Inventor :**
**1)Mahammad Safikur Rahman**
**2)Nitin A. Charhate**
**3)D. M. Chaudhary**
**4)Anil Kumar Sharma**

(57) Abstract :
The present invention relates to nanofiber based antimicrobial face mask for protection against viruses and a process of preparing face mask thereof. Most particularly, the present invention relates to preparing an antimicrobial face mask effective for protection against viruses with virus filtration Efficiency > 99%. The face mask is prepared by using composite filter media having an antimicrobial nanoparticle filled nanofiber layer deposited on the surface of nonwoven substrate.

No. of Pages : 31 No. of Claims : 23

(12) PATENT APPLICATION PUBLICATION
(21) Application No.3257/MUM/2013 A
(19) INDIA
(22) Date of filing of Application :17/10/2013
(43) Publication Date : 17/07/2015

(54) Title of the invention : ENGINEERED AND FABRICATED RCC CEMENT CONCRETE PRODUCTS USING CEMENT, AGGREGATES, STEEL, FERRIC OXIDE FLAKES OR ROLLING MILL MILLED STEEL FLAKES AND WATER FOR MAKING WEIGHT BOX AND ALLIED SUCH PRODUCTS WHICH CAN REPLACE VARIOUS CAST IRON CASTING PRODUCTS, MILLED STEEL FORGING PRODUCTS, ALUMINUM DIE CASTING PRODUCTS, ALUMINUM EXTRUSION PRODUCTS AND MILLED STEEL SHEET METAL PRODUCTS.

| | |
|---|---|
| (51) International classification | :E02B7/02, E04G 21/00 |
| (31) Priority Document No | :NA |
| (32) Priority Date | :NA |
| (33) Name of priority country | :NA |
| (86) International Application No | :NA |
| Filing Date | :NA |
| (87) International Publication No | : NA |
| (61) Patent of Addition to Application Number | :NA |
| Filing Date | :NA |
| (62) Divisional to Application Number | :NA |
| Filing Date | :NA |

(71)**Name of Applicant :**
**1)SANTOSH ARVIND PRADHAN**
Address of Applicant :'ARUNODAYA', PLOT NO.51, PIONEER HOUSING SOCIETY, SWAWLAMBI NAGAR, NAGPUR (MAHARASHTRA) INDIA 440025
(72)**Name of Inventor :**
**1)SANTOSH ARVIND PRADHAN**

(57) Abstract :
I have made final drawings of the product which will be engineered and fabricated RCC cement concrete structure using cement, aggregates, milled steel, ferric oxide flakes or rolling mill milled steel flakes and water for making weight box and allied such products which can replace various cast iron casting products, milled steel forging products, aluminum die casting products, aluminum extrusion products and milled steel sheet metal products. Based on the drawings; I have made various types of moulds for making engineered and fabricated various types of RCC cement concrete structure product as mentioned above. I have made the sheet metal fabricated engineered parts with the help of its press toolings and with the help of mechanical pow;er press by using milled steel material. I have erected several table top mounted vibratory special purpose machine at the shop. At the top of the table I have mounted detachable plane milled steel sheet at the top portion of vibratory special purpose machine. I have placed mould at the top portion of the vibratory special purpose machine than I have placed sheet metal fabricated milled steel parts in to the mould at specific locations for mounting purpose. I have placed qualifying production gauge with detachable pins at the location of sheet metal fabricated milled steel parts for maintaining center distances of each products. I will make the RCC cement concrete as per the grade specified in the drawings with the help of concrete mixer and with the use of cement, aggregates, milled steel, ferric oxide flakes or rolling mill milled steel flakes and water as raw material than after mixing the entire cement concrete and other specified materials as per the grade specified in the drawings. I will pour this mixed cement concrete and other specified materials in to the mould which is placed at the vibratory special purpose machine location and in which milled steel sheet metal fabricated engineered parts are already present. After pouring the RCC cement concrete and other specified material in to the specified mould, I will start the vibratory special purpose machine which will perform the vibratory motion for a particular time period till the RCC cement concrete and other specified material get settled in to the specified mould than I will stop the vibratory special purpose machine. After that the RCC cement concrete and other specified material is allowed to settle down for 24 hours or 48 hours time at the respective location of vibratory special purpose machine or at the pre mentioned site. After 24 hours or 48 hours of time the RCC cement concrete and other specified material structure will be released from the respective mould and then this RCC cement concrete and other specified material structure will be immersed in the water tank for the curing purpose. After doing curing process in the water this RCC cement concrete and other specified material structure will be disassembled from the qualifying production gauge and RCC cement concrete and other specified material structure will be placed in the sun light for natural strengthening operation. Later on after doing natural strengthening operation the cleaning of burr and the chamfering operation will be performed now the RCC cement concrete and other specified material parts will be ready. After making various types of the RCC cement concrete and other specified material parts as per the drawings with the help of above mentioned method, we will do assembly work with the help of nuts, bolts, sheet metal parts and washers as mentioned in the assembly drawings. After doing complete production work. I will check the quality norms set for the entire RCC cement concrete and other specified material structure assembly by tilting it to various locations as mentioned in my drawings and after successful checking of quality norms the product is ready for the dispatch.

No. of Pages : 7 No. of Claims : 10

(12) PATENT APPLICATION PUBLICATION
(19) INDIA
(22) Date of filing of Application :05/11/2013
(21) Application No.3503/MUM/2013 A
(43) Publication Date : 17/07/2015

(54) Title of the invention : WLAN ASSISTED NETWORK DETECTION FOR USER EQUIPMENT

(51) International classification :H04L12/28
(31) Priority Document No :NA
(32) Priority Date :NA
(33) Name of priority country :NA
(86) International Application No :NA
Filing Date :NA
(87) International Publication No : NA
(61) Patent of Addition to Application Number :NA
Filing Date :NA
(62) Divisional to Application Number :NA
Filing Date :NA

(71)**Name of Applicant :**
**1)QUALCOMM INCORPORATED**
Address of Applicant :5775 Morehouse Drive, San Diego, CA 92121-1714, United States of America U.S.A.
(72)**Name of Inventor :**
**1)Anand Krishna Puranik**
**2)Debesh Kumar Sahu**
**3)George Cherian**
**4)Tushar Gupta**
**5)Nishi Kanta Das**

(57) Abstract :
Methods, systems, and devices are described for detecting a communications network or assisting in the detection of a communications network. In a method for detecting a communications network, a beacon received from a device over a wireless local area network (WLAN) may be decoded to identify an information element (IE) in the beacon. The IE may indicate an availability of another network. When the IE is empty, a sleep mode may be entered (e.g., by a user equipment (UE)). In a method for assisting a detection of a communications network, a database including information indicating an availability of at least a first network may be accessed, and a beacon may be broadcast over a WLAN. The beacon may include an IE that indicates the availability of at least the first network

No. of Pages : 70 No. of Claims : 71

(12) PATENT APPLICATION PUBLICATION
(21) Application No.3461/MUM/2013 A
(19) INDIA
(22) Date of filing of Application :31/10/2013
(43) Publication Date : 17/07/2015

(54) Title of the invention : SYSTEM AND METHOD TO FACILITATE A USER INTERFACE ENABLED REVIEW OF STATIC ANALYSIS WARNINGS

| | | |
|---|---|---|
| (51) International classification | :G06F9/44 | (71)**Name of Applicant :** |
| (31) Priority Document No | :NA | **1)Tata Consultancy Services Limited** |
| (32) Priority Date | :NA | Address of Applicant :Nirmal Building, 9th Floor, Nariman Point, Mumbai 400021, Maharashtra, India |
| (33) Name of priority country | :NA | (72)**Name of Inventor :** |
| (86) International Application No | :NA | **1)MUSKE, Tukaram B** |
| Filing Date | :NA | |
| (87) International Publication No | : NA | |
| (61) Patent of Addition to Application Number | :NA | |
| Filing Date | :NA | |
| (62) Divisional to Application Number | :NA | |
| Filing Date | :NA | |

(57) Abstract :
The present disclosure discloses system and method for facilitating verification of software code. A first program point is selected, from the software code, indicating static analysis warning to be reviewed. Further, review-assisting information comprising at least one of set of modification points and controlling conditions are determined for user to judge whether the warning generated is safe or unsafe. From the set of modification points, non-useful modification points may be filter-out in order to determine only relevant modification points. After filtering, the system presents the review-assisting information (relevant modification point and controlling condition) in a systematic manner to the user for facilitating the verification of the software code.

No. of Pages : 29 No. of Claims : 9

(12) PATENT APPLICATION PUBLICATION
(21) Application No.3462/MUM/2013 A
(19) INDIA
(22) Date of filing of Application :31/10/2013
(43) Publication Date : 17/07/2015

(54) Title of the invention : A SYSTEM FOR ACTUATING A COMMUNICATION SIGNAL FOR OPERATING ELECTRICAL DEVICES DISTANCE

| | |
|---|---|
| (51) International classification | :H04W60/00, G06K19/07, A61G7/018 |
| (31) Priority Document No | :NA |
| (32) Priority Date | :NA |
| (33) Name of priority country | :NA |
| (86) International Application No | :NA |
| Filing Date | :NA |
| (87) International Publication No | : NA |
| (61) Patent of Addition to Application Number | :NA |
| Filing Date | :NA |
| (62) Divisional to Application Number | :NA |
| Filing Date | :NA |

(71)**Name of Applicant :**
**1)RAVI SHAH**
Address of Applicant :C/O K.K. BAGS, AJAY ARCAD SHOPPING MALL, JAWAHAR ROAD, SURENDRA NAGAR, GUJARAT, INDIA.
(72)**Name of Inventor :**
**1)RAVI SHAH**

(57) Abstract :
The present invention relates to a system which actuates a communication signal for operating electrical device/s even when overrun their original control range. The present system comprises of - Input module for providing input by the user for actuating and transmitting communication signals to connecting module to turn ON /OFF one or more electrical devices as per the requirement; - Connecting module which comprises of relay switch, microchip and transformer whereby the connecting . module is connected to the computer and main switch board of the place, whereon receiving the communication signals from the input module for turning ON/OFF electrical device/s as selected by the user, further transmits the communication signals to the respected electrical device/s selected by the user and - Electrical device/s on receiving the communication signal from connecting module, turn/s ON/OFF as per the input given by the user in the input module.

No. of Pages : 10 No. of Claims : 5

(12) PATENT APPLICATION PUBLICATION
(19) INDIA
(22) Date of filing of Application :31/10/2013
(21) Application No.3466/MUM/2013 A
(43) Publication Date : 17/07/2015

(54) Title of the invention : A PROCESS FOR THE PREPARATION OF DABIGATRAN ETEXILATE

(51) International classification :C07D213/75
(31) Priority Document No :NA
(32) Priority Date :NA
(33) Name of priority country :NA
(86) International Application No :NA
Filing Date :NA
(87) International Publication No : NA
(61) Patent of Addition to Application Number :NA
Filing Date :NA
(62) Divisional to Application Number :NA
Filing Date :NA

(71)**Name of Applicant :**
**1)WOCKHARDT LIMITED**
Address of Applicant :D-4, MIDC Area, Chikalthana, Aurangabad Maharashtra India
(72)**Name of Inventor :**
**1)Chaniyara, Ravi**
**2)Rafeeq, Mohammad**
**3)Merwade, Arvind Yekanathsa**
**4)Deo,Keshav**

(57) Abstract :
The present invention relates to a process for the preparation of Dabigatran etexilate free base from the salt of Dabigatran etexilate using base, and a process for the preparation of its substantially pure Form I.

No. of Pages : 9 No. of Claims : 8

(12) PATENT APPLICATION PUBLICATION
(21) Application No.3467/MUM/2013 A
(19) INDIA
(22) Date of filing of Application :31/10/2013
(43) Publication Date : 17/07/2015

(54) Title of the invention : A PROCESS FOR PREPARING 3-((4-HYDROXYBENZAMIDO)METHYL)-5-METHYLHEXANOIC ACID

| | |
|---|---|
| (51) International classification | :A61K47/10, A61K9/00, C07K14/62 |
| (31) Priority Document No | :NA |
| (32) Priority Date | :NA |
| (33) Name of priority country | :NA |
| (86) International Application No | :NA |
| Filing Date | :NA |
| (87) International Publication No | : NA |
| (61) Patent of Addition to Application Number | :NA |
| Filing Date | :NA |
| (62) Divisional to Application Number | :NA |
| Filing Date | :NA |

(71)**Name of Applicant :**
**1)WOCKHARDT LIMITED**
Address of Applicant :D-4, MIDC Area, Chikalthana, Aurangabad Maharashtra India
(72)**Name of Inventor :**
**1)Reddy, Rambhupal**
**2)Deshmukh Rajendra Dagadu**
**3)Gupta, Nitin**
**4)Deo,Keshav**

(57) Abstract :
The present invention relates to a process for preparing the compound of 3-((4-hydroxybenzamido)methyl)-5-methylhexanoic acid of Formula II or its salt, which is useful as reference marker or a key intermediate to provide pure pregabalin.

No. of Pages : 13 No. of Claims : 9

(12) PATENT APPLICATION PUBLICATION
(19) INDIA
(22) Date of filing of Application :31/10/2013
(21) Application No.3468/MUM/2013 A
(43) Publication Date : 17/07/2015

(54) Title of the invention : AN IMPROVED PROCESS FOR THE PREPARATION OF AMORPHOUS FORM OF LINAGLIPTIN

| | |
|---|---|
| (51) International classification | :A61K31/522, A61P3/10, C07D473/06 |
| (31) Priority Document No | :NA |
| (32) Priority Date | :NA |
| (33) Name of priority country | :NA |
| (86) International Application No | :NA |
| Filing Date | :NA |
| (87) International Publication No | : NA |
| (61) Patent of Addition to Application Number | :NA |
| Filing Date | :NA |
| (62) Divisional to Application Number | :NA |
| Filing Date | :NA |

(71)**Name of Applicant :**
**1)CADILA HEALTHCARE LIMITED**
Address of Applicant :CADILA HEALTHCARE LIMITED ZYDUS TOWER, SATELLITE CROSS ROADS AHMEDABAD-380015 Gujarat India
(72)**Name of Inventor :**
**1)DWIVEDI SHRI PRAKASH DHAR**
**2)SINGH KUMAR KAMLESH**
**3)GAJERA JITENDRA MAGANBHAI**
**4)CHARAN GANPAT DAN SHIMBHU**

(57) Abstract :
A process for preparation of amorphous form of linagliptin comprising milling linagliptin in presence or absence of a pharmaceutically acceptable carrier.

No. of Pages : 23 No. of Claims : 9

(12) PATENT APPLICATION PUBLICATION
(19) INDIA
(22) Date of filing of Application :24/10/2013
(21) Application No.3357/MUM/2013 A
(43) Publication Date : 17/07/2015

(54) Title of the invention : COOLING DEVICE WITH SWITCH HOUSING

| | |
|---|---|
| (51) International classification | :H05K7/20, H02B1/00, H02B1/56 |
| (31) Priority Document No | :NA |
| (32) Priority Date | :NA |
| (33) Name of priority country | :NA |
| (86) International Application No | :NA |
| Filing Date | :NA |
| (87) International Publication No | : NA |
| (61) Patent of Addition to Application Number | :NA |
| Filing Date | :NA |
| (62) Divisional to Application Number | :NA |
| Filing Date | :NA |

(71)**Name of Applicant :**
**1)BSH BOSCH UND SIEMENS HAUSGERATE GMBH**
Address of Applicant :CARL-WERY-STRASSE 34, 81739 MUNICH, GERMANY
**2)GODREJ & BOYCE MANUFACTURING COMPANY LIMITED**
(72)**Name of Inventor :**
**1)ASHISH MODI**
**2)HOLGER WALLISER**

(57) Abstract :
The present invention relates to a cooling device having an inner liner (103) with an opening (105) in an inner liner wall (141) for inserting a electrical switch (109) and a tray-like switch housing (107) for enclosing the inserted switch (109) on a backside of the inner liner wall (141), wherein the switch housing (107) comprises an insertion opening (111) for a form-locking insertion of the switch (109)

No. of Pages : 25 No. of Claims : 15

(12) PATENT APPLICATION PUBLICATION
(21) Application No.3358/MUM/2013 A
(19) INDIA
(22) Date of filing of Application :24/10/2013
(43) Publication Date : 17/07/2015

(54) Title of the invention : BLISTER PACK MACHINE FOR BLISTER PACKING PRODUCTS

| | |
|---|---|
| (51) International classification | :B65B5/06, B65G47/51, B65B61/20 |
| (31) Priority Document No | :NA |
| (32) Priority Date | :NA |
| (33) Name of priority country | :NA |
| (86) International Application No | :NA |
| Filing Date | :NA |
| (87) International Publication No | : NA |
| (61) Patent of Addition to Application Number | :NA |
| Filing Date | :NA |
| (62) Divisional to Application Number | :NA |
| Filing Date | :NA |

(71)**Name of Applicant :**
**1)SCI-TECH CENTRE**
Address of Applicant :7 PRABHAT NAGAR, JOGESHWARI WEST, MUMBAI 400102, MAHARASHTRA, INDIA
(72)**Name of Inventor :**
**1)MULUND KRISHNA**
**2)SINGH KARAN**

(57) Abstract :
The machine comprises a product recovery station having a product recovery unit (1) comprising a product guide assembly (2) and a venturr assembly (13) disposed below the product guide assembly describing a clearance (60) with the product guide assembly for a web foil (A) to pass therethrough. A product collector tray (28) having air vents (30) is detachably fitted to the housing (23) of the product guide assembly. The web foil consists of a single track or two tracks of cavities (B) formed therein. A partition member (45) disposed at the center of the longitudinal slot (4) at the top of the base block (3) of the product guide assembly is detachably fitted to the base block. The product guide assembly consists of gap adjustment means (40) to adjust the gap between the open inner side of the longitudinal slot and the side closure plate (11) of the product guide assembly (Figs 5 and 9).

No. of Pages : 29 No. of Claims : 6

(12) PATENT APPLICATION PUBLICATION
(19) INDIA
(22) Date of filing of Application :11/12/2014
(21) Application No.2516/MUMNP/2014 A
(43) Publication Date : 17/07/2015

(54) Title of the invention : METHODS AND SYSTEMS FOR PROVIDING LOCATION BASED SERVICES IN A VENUE

(51) International classification :H04W4/02
(31) Priority Document No :61/689926
(32) Priority Date :15/06/2012
(33) Name of priority country :U.S.A.
(86) International Application No :PCT/US2013/045756
Filing Date :14/06/2013
(87) International Publication No :WO 2013/188717
(61) Patent of Addition to Application Number :NA
Filing Date :NA
(62) Divisional to Application Number :NA
Filing Date :NA

(71)**Name of Applicant :**
**1)QUALCOMM INCORPORATED**
Address of Applicant :ATTN: International IP Administration 5775 Morehouse Drive San Diego California 92121 1714 U.S.A.
(72)**Name of Inventor :**
**1)WACHTER Andreas Klaus**
**2)EDGE Stephen William**
**3)STRICKLAND Stuart W.**

(57) Abstract :
Disclosed are systems methods and devices for application of location based services in a venue using mobile centric and network centric positioning techniques. In particular call message flows are described for specific use cases. In one particular implementation a system obtains estimated locations of mobile devices to provide location aware content to applications hosted on the mobile devices. In another implementation a system may gather statistics regarding mobile devices entry into departure from or movement within a venue for development of user analytics.

No. of Pages : 134 No. of Claims : 46

(12) PATENT APPLICATION PUBLICATION
(19) INDIA
(22) Date of filing of Application :11/12/2014
(21) Application No.2518/MUMNP/2014 A
(43) Publication Date : 17/07/2015

(54) Title of the invention : SITE SPECIFIC INTEGRATION

(51) International classification :C12N15/90,C12N5/10,C12N15/10
(31) Priority Document No :61/663147
(32) Priority Date :22/06/2012
(33) Name of priority country :U.S.A.
(86) International Application No :PCT/EP2013/062859
Filing Date :20/06/2013
(87) International Publication No :WO 2013/190032
(61) Patent of Addition to Application Number :NA
Filing Date :NA
(62) Divisional to Application Number :NA
Filing Date :NA

(71)**Name of Applicant :**
**1)LONZA BIOLOGICS PLC**
Address of Applicant :228 230 Bath Road Slough Berkshire SL1 4DX U.K.
**2)PFIZER INC.**
(72)**Name of Inventor :**
**1)RANCE James**
**2)YOUNG Robert**
**3)AGOSTINO Michael J.**
**4)MOFFAT Mark**
**5)ZHANG Lin**
**6)ZHANG Baohong**

(57) Abstract :
The present invention relates to stable and high producing site specific integration (SSI) host cells e. g. Chinese hamster ovary (CHO) derived host cells methods to produce and to use them.

No. of Pages : 79 No. of Claims : 24

(12) PATENT APPLICATION PUBLICATION
(19) INDIA
(22) Date of filing of Application :11/12/2014
(21) Application No.2519/MUMNP/2014 A
(43) Publication Date : 17/07/2015

(54) Title of the invention : WINDING APPARATUS

(51) International classification :B21F37/00,B29D30/48
(31) Priority Document No :NA
(32) Priority Date :NA
(33) Name of priority country :NA
(86) International Application No :PCT/JP2012/065043
Filing Date :12/06/2012
(87) International Publication No :WO 2013/186860
(61) Patent of Addition to Application Number :NA
Filing Date :NA
(62) Divisional to Application Number :NA
Filing Date :NA

(71)**Name of Applicant :**
**1)FUJI SEIKO CO. LTD.**
Address of Applicant :60 Hirakata 13 chome Fukuju cho Hashima shi Gifu 5016257 Japan
**2)FUJI SHOJI CO. LTD.**
(72)**Name of Inventor :**
**1)NISHIDA Kihachiro**

(57) Abstract :
A winding apparatus forms bead rings (B) by winding a single wire (W) around the outer periphery of a circular former (13) such that said wire is aligned in rows and columns. In the apparatus frame (11) a roller (16) for pressing the wire (W) on the outer periphery of the former (13) is provided such that the roller (16) can move in the row direction and column direction of the wire (W). A circular cam (20) having a cam surface (22a) is supported on a cam shaft (18) which rotates in synchronization with the rotation of the former (13). A cam follower (17) that moves integrally with the roller (16) in the row direction and column direction of the wire (W) is engaged on the cam surface (22a) of the cam (20) such that the roller (16) moves in the row direction of the wire (W) by means of the action of the cam surface (22a).

No. of Pages : 22 No. of Claims : 5

(12) PATENT APPLICATION PUBLICATION
(19) INDIA
(22) Date of filing of Application :01/11/2013
(21) Application No.3478/MUM/2013 A
(43) Publication Date : 17/07/2015

(54) Title of the invention : NOVEL INTERMEDIATE OF TAPENTADOL

| | |
|---|---|
| (51) International classification | :C07C211/03, C07C67/08 |
| (31) Priority Document No | :NA |
| (32) Priority Date | :NA |
| (33) Name of priority country | :NA |
| (86) International Application No | :NA |
| Filing Date | :NA |
| (87) International Publication No | : NA |
| (61) Patent of Addition to Application Number | :NA |
| Filing Date | :NA |
| (62) Divisional to Application Number | :NA |
| Filing Date | :NA |

(71)**Name of Applicant :**
**1)SUN PHARMA ADVANCED RESEARCH COMPANY LIMITED**
Address of Applicant :ACME PLAZA, ANDHERI-KURLA ROAD, ANDHERI (E), MUMBAI - 400 059, MAHARASHTRA, INDIA.
(72)**Name of Inventor :**
**1)MR. ANIL S KUMBHANI**
**2)DR. BISWAJIT SAMANTA**
**3)DR. KILARU SRINIVASU**
**4)DR. THENNATI RAJAMANNAR**

(57) Abstract :
The present invention relates to novel carbamate intermediate, process for its preparation and process for its conversion into 3-[(1R,2R)-3-(dimethylamino)-l-ethyl-2-methylpropyl]phenol, tapentadol and its pharmaceutical!} acceptable salts.

No. of Pages : 23 No. of Claims : 10

(12) PATENT APPLICATION PUBLICATION
(21) Application No.3279/MUM/2013 A
(19) INDIA
(22) Date of filing of Application :18/10/2013
(43) Publication Date : 17/07/2015

(54) Title of the invention : A LEAK AND DAMAGE PROOF APPARATUS ALONG WITH ITS SELF-CENTERING POSITION TO ROTATABLE SHAFT

| | |
|---|---|
| (51) International classification | :B23B3/00, B23B3/26 |
| (31) Priority Document No | :NA |
| (32) Priority Date | :NA |
| (33) Name of priority country | :NA |
| (86) International Application No | :NA |
| Filing Date | :NA |
| (87) International Publication No | : NA |
| (61) Patent of Addition to Application Number | :NA |
| Filing Date | :NA |
| (62) Divisional to Application Number | :NA |
| Filing Date | :NA |

(71)**Name of Applicant :**
**1)Amin Ayush Bhaskarbhai**
Address of Applicant :C1 - I53, G.I.D.C, Phase IV, Opp. Patalkuva, Vitthal Udyog Nagar 388 121 Anand, Gujarat, India.
(72)**Name of Inventor :**
**1)Amin Ayush Bhaskarbhai**

(57) Abstract :
A leak and damage proof apparatus along with its self-centering position to rotatable shaft The present invention discloses a leak proof and a damage proof sealing apparatus (17) for sealing at an opening where a rotatable shaft (1) passes through the barrier. The apparatus (17) mainly consists of a mechanical seal and a housing (15) enclosing said mechanical seal at the centre. The housing (15) of the mechanical seal comprises a top plate (13), a base plate (11) and a pair of leg support (12). The base plate (11) of the housing (15) comprises a pair of shaft locator (10) mounted between bottom ends of said leg support (12) to provide close tolerance to rotatable shaft (1) for preventing the rotatable shaft (1) from wobbling and damages.

No. of Pages : 13 No. of Claims : 7

(12) PATENT APPLICATION PUBLICATION
(19) INDIA
(22) Date of filing of Application :25/10/2013
(21) Application No.3364/MUM/2013 A
(43) Publication Date : 17/07/2015

(54) Title of the invention : HINGE SYSTEM

| | |
|---|---|
| (51) International classification | :E05D7/08, E05D7/00 |
| (31) Priority Document No | :NA |
| (32) Priority Date | :NA |
| (33) Name of priority country | :NA |
| (86) International Application No | :NA |
| Filing Date | :NA |
| (87) International Publication No | : NA |
| (61) Patent of Addition to Application Number | :NA |
| Filing Date | :NA |
| (62) Divisional to Application Number | :NA |
| Filing Date | :NA |

(71)**Name of Applicant :**
**1)RAJARAMBAPU INSTITUTE OF TECHNOLOGY**
Address of Applicant :RAJARAMNAGAR, ISLAMPUR, DIST. SANGLI - 415414, MAHARASHTRA, INDIA.
(72)**Name of Inventor :**
**1)ATTAR ABDULRASHID CHAND**

(57) Abstract :
A hinge system includes: a longitudinal element secured to a structure; and at least one hinge assembly disposed on the longitudinal element; o the hinge assembly comprising: first and second barrels having a longitudinally outwardly extending pintle element and a longitudinally inwardly extending bore formed on first operative ends thereof; first and second elongate engaging elements connected to first and second barrels at first ends thereof and connected to the longitudinal element at second ends thereof; wherein the longitudinally inwardly extending bore and the longitudinally outwardly extending pintle element are complementary to each other and the longitudinally inwardly extending bore rotatably and removably receives at least a portion of a corresponding longitudinally outwardly extending pintle element to facilitate an angular displacement between the first and second barrels to facilitate angular displacement of the wing with respect to the structure.

No. of Pages : 28 No. of Claims : 9

(12) PATENT APPLICATION PUBLICATION
(19) INDIA
(22) Date of filing of Application :25/10/2013
(21) Application No.3365/MUM/2013 A
(43) Publication Date : 17/07/2015

(54) Title of the invention : PARALLEL JAW GRIPPERS

| | |
|---|---|
| (51) International classification | :B25B5/08, B25B1/08 |
| (31) Priority Document No | :NA |
| (32) Priority Date | :NA |
| (33) Name of priority country | :NA |
| (86) International Application No | :NA |
| Filing Date | :NA |
| (87) International Publication No | : NA |
| (61) Patent of Addition to Application Number | :NA |
| Filing Date | :NA |
| (62) Divisional to Application Number | :NA |
| Filing Date | :NA |

(71)**Name of Applicant :**
**1)DIRECTOR GENERAL, DEFENCE RESEARCH & DEVELOPMENT ORGANIZATION, (DRDO)**
Address of Applicant :MINISTRY OF DEFENCE, GOVT. OF INDIA, ROOM NO. 348, B-WING, DRDO BHAWAN, RAJAJI MARG, NEW DELHI-110 105. India
(72)**Name of Inventor :**
**1)PATEL AJAY KUMAR**
**2)MUKHERJEE ALOK**
**3)PATHAK MRIDUKANT**
**4)SINGH PURNANAND**
**5)BANSAL ANUPAM**

(57) Abstract :
A parallel jaw gripper is disclosed and includes housing, a shaft coupled to housing, a ball screw, a nut engaged with the ball screw and at least pair of actuating mechanism. The ball screw connected to and rotates along with shaft. The actuating mechanism coupled to shaft and at least a pair of gripping pads for facilitating movement of gripping pads between operative gripping configuration and in-operative non-gripping configuration. The actuating mechanism includes at least one intermediate linkage, at least a pair of actuating linkages and at least a pair of supporting linkages. Each of the actuating linkage connected to gripping pad at one end and intermediate link at the other end and pivotally movable towards and away from each other. The actuating linkages of is selectively and interchangeably actuated based upon the configuration of the article. The supporting linkages facilitate maintaining oppositely disposed gripping pads parallel to each other.

No. of Pages : 27 No. of Claims : 8

(12) PATENT APPLICATION PUBLICATION
(19) INDIA
(22) Date of filing of Application :25/10/2013
(21) Application No.3366/MUM/2013 A
(43) Publication Date : 17/07/2015

(54) Title of the invention : FILTER-COOLER ASSEMBLY

| | |
|---|---|
| (51) International classification | :F01P7/16, F01M11/03, F01P11/08 |
| (31) Priority Document No | :NA |
| (32) Priority Date | :NA |
| (33) Name of priority country | :NA |
| (86) International Application No | :NA |
| Filing Date | :NA |
| (87) International Publication No | : NA |
| (61) Patent of Addition to Application Number | :NA |
| Filing Date | :NA |
| (62) Divisional to Application Number | :NA |
| Filing Date | :NA |

(71)**Name of Applicant :**
**1)CUMMINS INC.**
Address of Applicant :500 JACKSON STREET, COLUMBUS, IN 47201, USA
(72)**Name of Inventor :**
**1)THAKARE SARANG SUBHASH**
**2)PALVE CHANDRAKANT KARBHARI**

(57) Abstract :
A filter-cooler assembly is disclosed for circulating pressurized fluid from a sump to coolingly lubricate the engine main gallery and the piston cooling gallery of an internal combustion engine. The filter-cooler assembly (10) comprises a fluid circulating head (16) defining internally formed first annular conduit and second annular conduit in fluid communication with a cooler (12) and a filter (14). The first annular conduit defines an inlet port for entry of pressurized fluid within the fluid circulating head (16) while the second annular conduit defines at least one outlet port to fluidly communicate the pressurized fluid from the filter-cooler assembly(lO) to at least one of the piston cooling gallery and the engine main gallery.

No. of Pages : 29 No. of Claims : 10

(12) PATENT APPLICATION PUBLICATION
(19) INDIA
(22) Date of filing of Application :25/10/2013
(21) Application No.3373/MUM/2013 A
(43) Publication Date : 17/07/2015

(54) Title of the invention : CONTROLLED RELEASE BUDESONIDE COMPOSITIONS

| | |
|---|---|
| (51) International classification | :A61K31/58, A61K9/28, A61K9/48 |
| (31) Priority Document No | :NA |
| (32) Priority Date | :NA |
| (33) Name of priority country | :NA |
| (86) International Application No | :NA |
| Filing Date | :NA |
| (87) International Publication No | : NA |
| (61) Patent of Addition to Application Number | :NA |
| Filing Date | :NA |
| (62) Divisional to Application Number | :NA |
| Filing Date | :NA |

(71)**Name of Applicant :**
**1)CADILA HEALTHCARE LIMITED**
Address of Applicant :ZYDUS TOWER, SATELLITE CROSS ROADS, AHMEDABAD - 380015 GUJARAT, INDIA
(72)**Name of Inventor :**
**1)KULKARNI SUSHRUT KRISHNAJI**
**2)HANDA AJAYKUMAR**
**3)SINGH PUSHPENDRA PRATAP**
**4)SHAH ANKUR PARESH**

(57) Abstract :
The present invention relates to controlled release pharmaceutical compositions comprising budesonide. The invention also relates to processes for the preparation of such compositions and using those compositions in the treatment of Inflammatory Bowel Disease and Irritable Bowel Syndrome including mild to moderate ulcerative colitis.

No. of Pages : 23 No. of Claims : 10

(12) PATENT APPLICATION PUBLICATION
(19) INDIA
(22) Date of filing of Application :25/10/2013
(21) Application No.3374/MUM/2013 A
(43) Publication Date : 17/07/2015

(54) Title of the invention : OPTICAL ENANTIOMERS OF PHENYRAMIDOL AND PROCESS FOR CHIRAL SYNTHESIS

| | |
|---|---|
| (51) International classification | :C07D213/74, A61K31/4402, A61P29/00 |
| (31) Priority Document No | :NA |
| (32) Priority Date | :NA |
| (33) Name of priority country | :NA |
| (86) International Application No | :NA |
| Filing Date | :NA |
| (87) International Publication No | : NA |
| (61) Patent of Addition to Application Number | :NA |
| Filing Date | :NA |
| (62) Divisional to Application Number | :778/MUM/2006 |
| Filed on | :23/05/2006 |

(71)**Name of Applicant :**
**1)FERMENTA BIOTECH (UK) LIMITED**
Address of Applicant :CHARTER HOUSE, 8-10 STATION ROAD, MANOR PARK, LONDON, E12 5BT U.K.
(72)**Name of Inventor :**
**1)DATLA, ANUPAMA**
**2)WALAVALKAR, PRAMOD ABAJI**
**3)KONDA, ASHOK**
**4)TRIVIKRAM, SREENATH BABUNATH**

(57) Abstract :
The present invention discloses novel (R) and (S) Styrene Oxide based asymmetric synthesis for preparation of Phenyramidol enantiomers and to their pharmaceutically acceptable salts with high chiral purity. This invention further discloses clinical evaluation of (R) and (S) enantiomers of Phenyramidol, their salts and compositions thereof for enhanced/newer therapeutic benefits.

No. of Pages : 60 No. of Claims : 12

(12) PATENT APPLICATION PUBLICATION
(21) Application No.3375/MUM/2013 A
(19) INDIA
(22) Date of filing of Application :25/10/2013
(43) Publication Date : 17/07/2015

(54) Title of the invention : SYSTEM AND METHOD FOR SOCIAL NETWORKING FOR TRAVELERS

| | |
|---|---|
| (51) International classification | :G06F17/30, G06Q50/14 |
| (31) Priority Document No | :NA |
| (32) Priority Date | :NA |
| (33) Name of priority country | :NA |
| (86) International Application No | :NA |
| Filing Date | :NA |
| (87) International Publication No | : NA |
| (61) Patent of Addition to Application Number | :NA |
| Filing Date | :NA |
| (62) Divisional to Application Number | :NA |
| Filing Date | :NA |

(71)**Name of Applicant :**
**1)PHADATARE AMOL**
Address of Applicant :PLOT NO. 1, YASHWANT COLONY, VISAWA CAMP, SATARA-415001, MAHARASHTRA, INDIA
(72)**Name of Inventor :**
**1)PHADATARE AMOL**

(57) Abstract :
A system and method for social networking for travelers is disclosed. The system for social networking for travelers includes a server, internet enabled devices and a social networking travel portal. The internet enabled devices communicates with the server through cloud computing network. The social networking travel portal is accessed through the internet enabled devices. The social networking travel portal has social networking software. The social networking software receives travelers details of users, analyses and extracts co-travelers details, displays and notifies the co-travelers details to users.

No. of Pages : 16 No. of Claims : 11

(12) PATENT APPLICATION PUBLICATION
(19) INDIA
(22) Date of filing of Application :27/09/2013
(21) Application No.3094/MUM/2013 A
(43) Publication Date : 17/07/2015

(54) Title of the invention : FILE TRANSFER TO A DISTRIBUTED FILE SYSTEM

(51) International classification :G06F17/30,H04L29/08
(31) Priority Document No :NA
(32) Priority Date :NA
(33) Name of priority country :NA
(86) International Application No :NA
Filing Date :NA
(87) International Publication No : NA
(61) Patent of Addition to Application Number :NA
Filing Date :NA
(62) Divisional to Application Number :NA
Filing Date :NA

(71)**Name of Applicant :**
**1)TATA CONSULTANCY SERVICES LIMITED**
Address of Applicant :Nirmal Building, 9th Floor, Nariman Point, Mumbai, Maharashtra 400021 India
(72)**Name of Inventor :**
**1)ANTONY, Jobin**
**2)VARGHESE, Abraham**

(57) Abstract :
A file storage system (108) to receive a file from a client device (102-N) includes a determination module (142) to determine a primary set of virtual segments from amongst a plurality of virtual segments of the file to be received from the client device (102-N). Each of the plurality of virtual segments is a logical portion of the file. The file storage system (108) further includes a receiving module (144) to establish a secure connection and a plurality of file transfer protocol connections corresponding to the secure connection, with the client device (102-N), to receive the primary set of virtual segments from the client device (102-N). The receiving module (144) further receives, in parallel, the primary set of virtual segments from the client device (102-N) for storage, through the plurality of file transfer protocol connections.

No. of Pages : 29 No. of Claims : 25

(12) PATENT APPLICATION PUBLICATION
(21) Application No.3098/MUM/2013 A
(19) INDIA
(22) Date of filing of Application :30/09/2013
(43) Publication Date : 17/07/2015

(54) Title of the invention : TRAMADOL HYDROCHLORIDE AND PARACETAMOL ORALLY DISINTEGRATING COMPOSITION AND PROCESS FOR PREPARING THE SAME

| | |
|---|---|
| (51) International classification | :A61K31/135, A61K9/20 |
| (31) Priority Document No | :NA |
| (32) Priority Date | :NA |
| (33) Name of priority country | :NA |
| (86) International Application No | :NA |
| Filing Date | :NA |
| (87) International Publication No | : NA |
| (61) Patent of Addition to Application Number | :NA |
| Filing Date | :NA |
| (62) Divisional to Application Number | :NA |
| Filing Date | :NA |

(71)**Name of Applicant :**
**1)ATHENA DRUG DELIVERY SOLUTIONS PVT LTD.**
Address of Applicant :602, 6TH FLOOR, STAR HUB, TOWER II, SAHAR INTERNATIONAL AIRPORT ROAD, ANDHERI (EAST), MUMBAI 400059, Maharashtra India
(72)**Name of Inventor :**
**1)MR. MAHENDRA B. CHAUDHARI**
**2)MR. JAGDISH S. WADHWANI**

(57) Abstract :
Disclosed is a tramadol hydrochloride and paracetamol composition, comprising: about 2.5 to about 5 percent by weight of tramadol hydrochloride; about 25 to about 30 percent by weight of paracetamol; about 1.25 to about 1.75 percent by weight of colloidal silicon dioxide;about 0.25 to about 0.35 percent by weight of povidone K-30; about 4.5 to about 5.5 percent by weight of ethyl cellulose N7; about 1.5 to about 2 percent by weight of mannitol 25; about 20 to about 25 percent by weight of mannitol 400; about 20 to about 25 percent by weight of mannitol 35; about 9 to about 11 percent by weight of a disintegrant; about 3 to about 5 percent by weight of a sweetener; about 1 to about 1.5 percent by weight of a flavorant; and about 0.5 to about 1.5 percent by weight of a lubricant.

No. of Pages : 29 No. of Claims : 16

(12) PATENT APPLICATION PUBLICATION
(21) Application No.3390/MUM/2013 A
(19) INDIA
(22) Date of filing of Application :28/10/2013
(43) Publication Date : 17/07/2015

(54) Title of the invention : A NOVEL TABLET DOSAGE FORM

(51) International classification :A61K9/20
(31) Priority Document No :558/MUM/2008
(32) Priority Date :19/03/2008
(33) Name of priority country :India
(86) International Application No :NA
Filing Date :NA
(87) International Publication No : NA
(61) Patent of Addition to Application Number :558/MUM/2008
Filed on :01/01/1900
(62) Divisional to Application Number :NA
Filing Date :NA

(71)**Name of Applicant :**
**1)WOCKHARDT LIMITED**
Address of Applicant :WOCKHARDT LIMITED D-4, MIDC Area, Chikalthana, Aurangabad Maharashtra India
(72)**Name of Inventor :**
**1)Jain, Girish Kumar**
**2)Gundu, Ramakant Kashinath**
**3)Dabre, Rahul Sudhakar**

(57) Abstract :
The present invention relates to novel tablet dosage forms, which can be used for different classes of pharmaceutical active ingredients posing stability issues in a single unit system. The dosage form includes a first layer that includes a tablet of one or more active pharmaceutical ingredients, which is inlayed in the first layer along with other pharmaceutically acceptable excipients, and a second layer that includes one or more active pharmaceutical ingredients optionally with other pharmaceutically acceptable excipients.

No. of Pages : 24 No. of Claims : 10

(12) PATENT APPLICATION PUBLICATION
(21) Application No.3393/MUM/2013 A
(19) INDIA
(22) Date of filing of Application :28/10/2013
(43) Publication Date : 17/07/2015

(54) Title of the invention : COATED IRON OXIDE NANOPARTICLES TO ENHANCE ANTIBIOTIC EFFICACY BY BLOCKING EFFLUX IN MYCOBACTERIUM SMEGMATIS

(51) International classification :A61K38/00
(31) Priority Document No :NA
(32) Priority Date :NA
(33) Name of priority country :NA
(86) International Application No :NA
Filing Date :NA
(87) International Publication No : NA
(61) Patent of Addition to Application Number :NA
Filing Date :NA
(62) Divisional to Application Number :NA
Filing Date :NA

(71)**Name of Applicant :**
**1)INDIAN INSTITUTE OF TECHNOLOGY BOMBAY**
Address of Applicant :POWAI, MUMBAI - 400 076,. Maharashtra India
(72)**Name of Inventor :**
**1)MEHRA, SARIKA**
**2)BANDYOPADHYAYA, RAJDIP**
**3)PADWAL, PRIYANKA**

(57) Abstract :
In the present invention there is provided a polyacrylic acid coated iron oxide nanoparticle, which acts as an efflux inhibitor in the treatment of drug resistance and compositions comprising an efflux inhibitor and an antibiotic agent, demonstrating for the first time that nanoparticles as a class of materials can act as bacterial efflux inhibitors, and thereby enhance antibiotic efficacy of certain drugs used in treatment of tuberculosis.

No. of Pages : 25 No. of Claims : 7

(12) PATENT APPLICATION PUBLICATION
(19) INDIA
(22) Date of filing of Application :28/10/2013
(21) Application No.3395/MUM/2013 A
(43) Publication Date : 17/07/2015

(54) Title of the invention : PROCESS FOR THE PREPARATION OF ROFLUMILAST ANDRELATED IMPURITIES

| | |
|---|---|
| (51) International classification | :C07D213/75 |
| (31) Priority Document No | :NA |
| (32) Priority Date | :NA |
| (33) Name of priority country | :NA |
| (86) International Application No | :NA |
| Filing Date | :NA |
| (87) International Publication No | : NA |
| (61) Patent of Addition to Application Number | :NA |
| Filing Date | :NA |
| (62) Divisional to Application Number | :NA |
| Filing Date | :NA |

(71)**Name of Applicant :**
**1)CADILA HEALTHCARE LIMITED**
Address of Applicant :CADILA HEALTHCARE LIMITED ZYDUS TOWER, SATELLITE CROSS ROADS AHMEDABAD-380015 Gujarat India
(72)**Name of Inventor :**
**1)DWIVEDI SHRI PRAKASH DHAR**
**2)PARIHAR JAYPRAKASH AJITTSINGH**
**3)SHAH ALPESHKUMAR PRAVINCHANDRA**
**4)GAJJAR SAMIR RAMESHBHAI**

(57) Abstract :
The present invention provides process for the preparation of roflumilast and related impurities. The invention also provides pure roflumilast and a pharmaceutical compositions comprising therapeutically effective amount of roflumilast and 4-cyclopropylmethoxy-N-(3, 5-dichloro-pyridin-4-yl)-3-difluoromethoxy benzamide (positional isomer of roflumilast), for oral administration to reduce the risk of COPD exacerbations in patients with severe COPD associated with chronic bronchitis.

No. of Pages : 39 No. of Claims : 28

(12) PATENT APPLICATION PUBLICATION
(21) Application No.3398/MUM/2013 A
(19) INDIA
(22) Date of filing of Application :28/10/2013
(43) Publication Date : 17/07/2015

(54) Title of the invention : SYSTEM AND METHOD FOR FACILITATING INTERACTION BETWEEN USERS OPERATING ON SEPARATE PROTOCOLS OVER A NETWORK INTERFACE

| | |
|---|---|
| (51) International classification | :G06F3/00, H04N1/00, G06F13/10 |
| (31) Priority Document No | :NA |
| (32) Priority Date | :NA |
| (33) Name of priority country | :NA |
| (86) International Application No | :NA |
| Filing Date | :NA |
| (87) International Publication No | : NA |
| (61) Patent of Addition to Application Number | :NA |
| Filing Date | :NA |
| (62) Divisional to Application Number | :NA |
| Filing Date | :NA |

(71)**Name of Applicant :**
**1)Emart Solutions India Private Limited**
Address of Applicant :2nd Floor, Malhotra House, Next to Tata Motors Showroom, Marwa Industrial Estate, Off Saki Vihar Road, Sakinaka, Mumbai 400072 Maharashtra India
(72)**Name of Inventor :**
**1)Srikanth Chunduri**
**2)Aditya Bhamidipaty**

(57) Abstract :
Method of capturing, processing and authenticating user information over a plurality of nodes in a network and a system there-for The present invention provides a system and method of capturing, processing and authenticating user information over a plurality of nodes in a network wherein each of the plurality of nodes operate on at least one protocol. In an embodiment, each of the plurality of nodes operate on different protocol than one another.

No. of Pages : 17 No. of Claims : 11

(12) PATENT APPLICATION PUBLICATION
(21) Application No.3399/MUM/2013 A
(19) INDIA
(22) Date of filing of Application :29/10/2013
(43) Publication Date : 17/07/2015

(54) Title of the invention : A PROCESS FOR THE PREPARATION OF 1, 3-DIARYL- (1H, 3H)-6-METHYLPYRIMIDINE-2, 4-DIONES.

(51) International classification :C07D403/04
(31) Priority Document No :NA
(32) Priority Date :NA
(33) Name of priority country :NA
(86) International Application No :NA
Filing Date :NA
(87) International Publication No : NA
(61) Patent of Addition to Application Number :NA
Filing Date :NA
(62) Divisional to Application Number :NA
Filing Date :NA

(71)**Name of Applicant :**
**1)DR. M. M. V.RAMANA**
Address of Applicant :DEPARTMENT OF CHEMISTRY, UNIVERSITY OF MUMBAI, VIDYANAGARI, SANTACRUZ (EAST), MUMBAI-400 098, Maharashtra India
(72)**Name of Inventor :**
**1)DR. M. M. V. RAMANA**
**2)DR. SANJAY C. PAWAR**

(57) Abstract :
This invention describes the preparation of 1, 3-diaryl-(iH. 3H)-6-methylpyrimidine-2, 4-diones by subjecting corresponding 2, 4-diaryioxy-6-methylpyrimidines to Chapman rearrangement.

No. of Pages : 13 No. of Claims : 10

(12) PATENT APPLICATION PUBLICATION
(19) INDIA
(22) Date of filing of Application :10/12/2014
(21) Application No.2508/MUMNP/2014 A
(43) Publication Date : 17/07/2015

(54) Title of the invention : DEVICE FOR INTRODUCING A DEFINED QUANTITY OF A SECOND POWDER INTO A PROCESS VESSEL

(51) International classification :G01F11/28
(31) Priority Document No :10 2013 104 003.9
(32) Priority Date :19/04/2013
(33) Name of priority country :Germany
(86) International Application No :PCT/DE2014/100012
Filing Date :20/01/2014
(87) International Publication No :WO 2014/169897
(61) Patent of Addition to Application Number :NA
Filing Date :NA
(62) Divisional to Application Number :NA
Filing Date :NA

(71)**Name of Applicant :**
**1)GLATT SYSTEMTECHNIK GMBH**
Address of Applicant :Grunaer Weg 26 01277 Dresden Germany
**2)HARRO H–FLIGER VERPACKUNGSMASCHINEN GMBH**
(72)**Name of Inventor :**
**1)PRITZKE Heinz**
**2)KNORR Wolfgang**
**3)WURST Reiner**

(57) Abstract :
The invention relates to a device for introducing small and the smallest quantities of powdery materials into larger process vessels. It is particularly suitable for containment applications of active ingredients and/or sterile applications. The device serves to introduce a defined quantity of a second powder into a process vessel (1) in which a first powder or mixture of powders is located wherein a coupling flange (2) with a sealing flap (3) is present at the process vessel (1). The second powder can be introduced into a tubular cartridge (4) which can be mounted displaceably in a transport unit. The transport unit has a connecting flange (6) with a sealing flap (7). The connecting flange (6) can be connected to the coupling flange (2) such that the sealing flap (3) and the sealing flap (7) can be opened and that the cartridge (4) can be displaced within the transport unit through the opened sealing flaps (3 and 7) as far as the plane of the inner wall of the process vessel (1). The second powder is emptied from the cartridge (4) into the process vessel (1) by means of a delivery piston (8). The cartridge (4) can possess a piston rod (5) with a plurality of pistons. Solutions with a double piston a rotatable cartridge core (16) or a turn lock fastener (33) are also described.

No. of Pages : 25 No. of Claims : 12

(12) PATENT APPLICATION PUBLICATION
(19) INDIA
(22) Date of filing of Application :10/12/2014
(21) Application No.2509/MUMNP/2014 A
(43) Publication Date : 17/07/2015

(54) Title of the invention : GEAR PUMP OR HYDRAULIC GEAR MOTOR WITH HELICAL TOOTHING PROVIDED WITH HYDRAULIC SYSTEM FOR AXIAL THRUST BALANCE.

(51) International classification :F04C2/08,F04C15/00
(31) Priority Document No :AN2013A000102
(32) Priority Date :30/05/2013
(33) Name of priority country :Italy
(86) International Application No :PCT/EP2014/060297
Filing Date :20/05/2014
(87) International Publication No :WO 2014/191253
(61) Patent of Addition to Application Number :NA
Filing Date :NA
(62) Divisional to Application Number :NA
Filing Date :NA

(71)**Name of Applicant :**
**1)MARZOCCHI POMPE S.P.A.**
Address of Applicant :15 Via 63 Brigata Bolero I 40033 Casalecchio Di Reno (BO) Italy
(72)**Name of Inventor :**
**1)FERRETTI Stefano**
**2)PERSICI Danilo**

(57) Abstract :
Gear pump or hydraulic gear motor with helical toothing provided with hydraulic system for axial thrust balance. A gear pump (100) comprises a toothed driving wheel (1) a toothed driven wheel (2) a front flange (6) from which a projecting portion (13) of the shaft protrudes frontally being connected to the shaft (10) of the driving wheel a back lid (7) fixed to the case (3) and an intermediate flange (8) disposed between the case (3) and the front flange (6). The intermediate flange (8) comprises a first chamber (80) and a second chamber (81) connected by means of a connection duct (82) to the inlet or outlet fluid duct of the pump; a compensating ring (9) mounted in the first chamber (80) of the intermediate flange and inserted on a portion (T) of the shaft (10) of the driving wheel in such manner to compensate the axial forces (A) of the driving wheel and transmit the motion on the shaft (10) of the driving wheel; and a piston (88) mounted in the second chamber (81) of the intermediate flange in order to stop against one end of said shaft (20) of the toothed driven wheel in such manner to compensate the axial forces (B) imposed on the toothed driven wheel.

No. of Pages : 40 No. of Claims : 11

(12) PATENT APPLICATION PUBLICATION
(19) INDIA
(22) Date of filing of Application :30/09/2013
(21) Application No.3117/MUM/2013 A
(43) Publication Date : 17/07/2015

(54) Title of the invention : ELECTRICAL CONNECTOR

(51) International classification :H02H7/045
(31) Priority Document No :NA
(32) Priority Date :NA
(33) Name of priority country :NA
(86) International Application No :NA
Filing Date :NA
(87) International Publication No : NA
(61) Patent of Addition to Application Number :NA
Filing Date :NA
(62) Divisional to Application Number :NA
Filing Date :NA

(71)**Name of Applicant :**
**1)RAYCHEM RPG PVT. LTD.**
Address of Applicant :RPG HOUSE, 463, DR. ANNIE BESANT ROAD, MUMBAI : 400 030, MAHARASHTRA, INDIA
(72)**Name of Inventor :**
**1)SHRINIVAS B. SHRIPAT**
**2)AMIT BHATIA**

(57) Abstract :
In one embodiment, an electrical connector (100) for connecting multiple conductors (105 and106) with a transformer stud (110) is provided. The electrical connector (100) comprises a first portion (112) having a plurality of conduits (113 and114) for receiving the conductors (105 and106), and a second portion (116)coupled to the first portion (112) and configured to be positioned over the transformer stud (110) so as to connect the conductors (105 and106) with the transformer stud (110). Further, the first portion (112) is shaped to include multiple grooves (118) at the distal end (119) andthe second portion (116) comprises a plurality of projections (120) in accordance with the configuration of the grooves (118) in the first portion (112) such that the second portion (116) is slidably coupled to the first portion (112).

No. of Pages : 18 No. of Claims : 7

(12) PATENT APPLICATION PUBLICATION
(19) INDIA
(22) Date of filing of Application :25/10/2013
(21) Application No.3379/MUM/2013 A
(43) Publication Date : 17/07/2015

(54) Title of the invention : NOVEL SYNTHESIS OF SOFOSBUVIR

| | |
|---|---|
| (51) International classification | :C07D403/14, A61P31/14, A61K31/4178 |
| (31) Priority Document No | :NA |
| (32) Priority Date | :NA |
| (33) Name of priority country | :NA |
| (86) International Application No | :NA |
| Filing Date | :NA |
| (87) International Publication No | : NA |
| (61) Patent of Addition to Application Number | :NA |
| Filing Date | :NA |
| (62) Divisional to Application Number | :NA |
| Filing Date | :NA |

(71)**Name of Applicant :**
**1)CADILA HEALTHCARE LIMITED**
Address of Applicant :CADILA HEALTHCARE LIMITED ZYDUS TOWER, SATELLITE CROSS ROADS AHMEDABAD-380015 Gujarat India
(72)**Name of Inventor :**
**1)DWIVEDI SHRI PRAKASH DHAR**
**2)PARIHAR JAYPRAKASH AJITSINGH**
**3)SHARMA PIYUSH RAJENDRA**

(57) Abstract :
The present invention provides a process for the preparation of sofosbuvir of Formula (I-Sp), the process comprising: reacting phenyloxy-phosphodichloridate of Formula (VII) with compound of Formula (VI) to obtain compound of Formula (V); reacting compound of Formula (V) with the appropriate amino ester of Formula (IV) to produce phenyl phosphordiamidates of Formula (III); and reacting phenyl phosphordiamidates of Formula (III) with nucleoside of Formula (II) to obtain compound of Formula (I-Sp)

No. of Pages : 16 No. of Claims : 10

(12) PATENT APPLICATION PUBLICATION
(19) INDIA
(22) Date of filing of Application :25/10/2013
(21) Application No.3381/MUM/2013 A
(43) Publication Date : 17/07/2015

(54) Title of the invention : SOFTWARE PROJECT ESTIMATION

| | |
|---|---|
| (51) International classification | :G06Q10/00, G06F9/44 |
| (31) Priority Document No | :NA |
| (32) Priority Date | :NA |
| (33) Name of priority country | :NA |
| (86) International Application No | :NA |
| Filing Date | :NA |
| (87) International Publication No | : NA |
| (61) Patent of Addition to Application Number | :NA |
| Filing Date | :NA |
| (62) Divisional to Application Number | :NA |
| Filing Date | :NA |

(71)**Name of Applicant :**
**1)TATA CONSULTANCY SERVICES LIMITED**
Address of Applicant :Nirmal Building, 9th Floor, Nariman Point, Mumbai, Maharashtra 400021 India
(72)**Name of Inventor :**
**1)BHATTACHARYYA, Pranabendu**
**2)DAS, Sharmila**

(57) Abstract :
A system and a method related to software project estimation are described. According to one embodiment, the method comprises receiving a value corresponding to at least one decision parameter including a project type, a technology, a software development life cycle (SDLC) type and a stage of the software project from user. The received value is mapped with techniques associated with each of estimation parameters including a size parameter, an effort parameter, a cost parameter, and a schedule parameter in a decision matrix. Based on the mapping, one or more techniques for each estimation parameter are shortlisted, and a success rating factor for each shortlisted technique is evaluated based on historical data (112) to identify a primary set of techniques. Compatibility of the primary set of techniques is then determined based on an interoperability factor to identify at least one secondary set of techniques providing optimum estimate of the software project.

No. of Pages : 25 No. of Claims : 11

(12) PATENT APPLICATION PUBLICATION
(21) Application No.3300/MUM/2013 A
(19) INDIA
(22) Date of filing of Application :22/10/2013
(43) Publication Date : 17/07/2015

(54) Title of the invention : RIGID ENDOSCOPE HOLDER AND ENDOSCOPE FIXING METHOD WITH MICROSCOPE GRIPPING ATTACHMENT

| | |
|---|---|
| (51) International classification | :A61B10/04, A61B19/00, A61B10/02 |
| (31) Priority Document No | :NA |
| (32) Priority Date | :NA |
| (33) Name of priority country | :NA |
| (86) International Application No | :NA |
| Filing Date | :NA |
| (87) International Publication No | : NA |
| (61) Patent of Addition to Application Number | :NA |
| Filing Date | :NA |
| (62) Divisional to Application Number | :NA |
| Filing Date | :NA |

(71)**Name of Applicant :**
**1)DR. MUBARAK MUHAMED KHAN**
Address of Applicant :SUSHRUT ENT HOSPITAL, OPP. PARULEKAR HIGH SCHOOL, TALGAON-D, PUNE-410 507 Maharashtra India
(72)**Name of Inventor :**
**1)DR. MUBARAK MUHAMED KHAN**

(57) Abstract :
A holder is provided for attaching a rigid endoscope to optical component of operating microscope, and provided with a mechanism to adjust the relative position of either the rigid endoscope or the operating microscope or both in vertical direction/plane, horizontal direction/plane and the rotational direction. The said assembly retains all movements of operating microscope including the focusing system of the operating microscope adapted for/applied to the endoscope, which are very much important during surgery. The holder is attached to optical component of the operating microscope and hence endoscope and operating microscope can be used alternately during surgery.

No. of Pages : 23 No. of Claims : 4

(12) PATENT APPLICATION PUBLICATION
(21) Application No.3301/MUM/2013 A
(19) INDIA
(22) Date of filing of Application :22/10/2013
(43) Publication Date : 17/07/2015

(54) Title of the invention : ASSEMBLY FOR CONVERTING FIXED TYPE MOULDED CASE CIRCUIT BREAKER INTO PLUG IN/PLUG OUT TYPE

| | |
|---|---|
| (51) International classification | :H01H71/12, H02B11/127 |
| (31) Priority Document No | :NA |
| (32) Priority Date | :NA |
| (33) Name of priority country | :NA |
| (86) International Application No | :NA |
| Filing Date | :NA |
| (87) International Publication No | : NA |
| (61) Patent of Addition to Application Number | :NA |
| Filing Date | :NA |
| (62) Divisional to Application Number | :NA |
| Filing Date | :NA |

(71)**Name of Applicant :**
**1)LARSEN & TOUBRO LIMITED**
Address of Applicant :LARSEN & TOUBRO LIMITED L&T HOUSE, BALLARD ESTATE, P. O. BOX: 278, MUMBAI 400 001, Maharashtra India
(72)**Name of Inventor :**
**1)UDAY DIGAMBAR MAHAJAN**
**2)ABHIJEET CHANDRAKANT RANE**

(57) Abstract :
Disclosed is an assembly for converting fixed type moulded case circuit breaker into plug in/plug out type. The MCCB engagement in the assembly is assured by interlocked slots provided on a back plate. The guiding arrangement for the MCCB is visible from front side while inserting the MCCB in fixed part, for e.g. a guiding unit, which helps the operator to align the MCCB easily in a switchboard panel

No. of Pages : 24 No. of Claims : 3

(12) PATENT APPLICATION PUBLICATION
(19) INDIA
(22) Date of filing of Application :22/10/2013

(21) Application No.3302/MUM/2013 A
(43) Publication Date : 17/07/2015

(54) Title of the invention : WINDOW MANAGEMENT FOR STREAM PROCESSING AND STREAM REASONING

| | |
|---|---|
| (51) International classification | :G06F9/44, G06F15/00, G06F 17/00 |
| (31) Priority Document No | :NA |
| (32) Priority Date | :NA |
| (33) Name of priority country | :NA |
| (86) International Application No | :NA |
| Filing Date | :NA |
| (87) International Publication No | : NA |
| (61) Patent of Addition to Application Number | :NA |
| Filing Date | :NA |
| (62) Divisional to Application Number | :NA |
| Filing Date | :NA |

(71)**Name of Applicant :**
**1)Tata Consultancy Services Limited**
Address of Applicant :Nirmal Building, 9th Floor, Nariman Point, Mumbai 400021, Maharashtra, India
(72)**Name of Inventor :**
**1)BANERJEE, Snehasis**
**2)MUKHERJEE, Debnath**

(57) Abstract :
Disclosed is a system and method for providing data required for resolving a query. A data receiving module may receive a dataset captured by a plurality of sensors. A logic manager module may create a space for storing the dataset in a window of a plurality of windows. The logic manager module may further receive the query from a user. In one aspect, the query may either be registered query or an ad-hoc query. A window manager module may determine the data based upon the query. The window manager module may further resize the window when the query is the registered query. A learning module may select a maximum size window having a maximum size amongst the plurality of windows when the query is the ad-hoc query. A data facilitating module may provide the data in order to resolve the query.

No. of Pages : 30 No. of Claims : 10

(12) PATENT APPLICATION PUBLICATION
(19) INDIA
(22) Date of filing of Application :22/10/2013
(21) Application No.3308/MUM/2013 A
(43) Publication Date : 17/07/2015

(54) Title of the invention : PHARMACEUTICAL COMPOSITIONS COMPRISING ANTIBACTERIAL AGENTS

| | |
|---|---|
| (51) International classification | :A61K31/439, A61K31/546 |
| (31) Priority Document No | :NA |
| (32) Priority Date | :NA |
| (33) Name of priority country | :NA |
| (86) International Application No | :NA |
| Filing Date | :NA |
| (87) International Publication No | : NA |
| (61) Patent of Addition to Application Number | :NA |
| Filing Date | :NA |
| (62) Divisional to Application Number | :NA |
| Filing Date | :NA |

(71)**Name of Applicant :**
**1)WOCKHARDT LIMITED**
Address of Applicant :D-4, MIDC Area, Chikalthana, Aurangabad Maharashtra India
(72)**Name of Inventor :**
**1)Bhagwat,Sachin**
**2)Patel,Mahesh Vithalbhai**

(57) Abstract :
Pharmaceutical compositions comprising imipenem or a pharmaceutically acceptable derivative, and a compound of Formula (I) or a stereoisomer or a pharmaceutically acceptable derivative thereof are disclosed.

No. of Pages : 26 No. of Claims : 15

(12) PATENT APPLICATION PUBLICATION
(21) Application No.3309/MUM/2013 A
(19) INDIA
(22) Date of filing of Application :22/10/2013
(43) Publication Date : 17/07/2015

(54) Title of the invention : PHARMACEUTICAL COMPOSITION COMPRISING ANTIBACTERIAL AGENTS

| | |
|---|---|
| (51) International classification | :A61K31/407, A61K31/43, A61K31/04 |
| (31) Priority Document No | :NA |
| (32) Priority Date | :NA |
| (33) Name of priority country | :NA |
| (86) International Application No | :NA |
| Filing Date | :NA |
| (87) International Publication No | : NA |
| (61) Patent of Addition to Application Number | :NA |
| Filing Date | :NA |
| (62) Divisional to Application Number | :NA |
| Filing Date | :NA |

(71)**Name of Applicant :**
**1)WOCKHARDT LIMITED**
Address of Applicant :D-4, MIDC Area, Chikalthana, Aurangabad Maharashtra India
(72)**Name of Inventor :**
**1)Bhagwat,Sachin**
**2)Patel,Mahesh Vithalbhai**

(57) Abstract :
Pharmaceutical compositions comprising cefepime or a pharmaceutically acceptable derivative, and a compound of Formula (I) or a stereoisomer or a pharmaceutically acceptable derivative thereof are disclosed.

No. of Pages : 27 No. of Claims : 14

(12) PATENT APPLICATION PUBLICATION
(19) INDIA
(22) Date of filing of Application :05/11/2013
(21) Application No.3500/MUM/2013 A
(43) Publication Date : 17/07/2015

(54) Title of the invention : A DE-AERATION CIRCUIT FOR AN ENGINE COOLING SYSTEM

| | |
|---|---|
| (51) International classification | :F02B29/04, F01P7/16, F01P11/02 |
| (31) Priority Document No | :NA |
| (32) Priority Date | :NA |
| (33) Name of priority country | :NA |
| (86) International Application No | :NA |
| Filing Date | :NA |
| (87) International Publication No | : NA |
| (61) Patent of Addition to Application Number | :NA |
| Filing Date | :NA |
| (62) Divisional to Application Number | :NA |
| Filing Date | :NA |

(71)**Name of Applicant :**
**1)MAHINDRA & MAHINDRA LIMITED**
Address of Applicant :MAHINDRA TOWERS, WORLI, MUMBAI - 400 018, MAHARASHTRA, INDIA
(72)**Name of Inventor :**
**1)LAKSHMAIAH BRAHMASANI**
**2)SAMSON SOLOMON**
**3)K. SARANGAPANI**
**4)MAJHARKHAN PARVEJ ALAMKHAN**

(57) Abstract :
A de-aeration circuit for separating air entrapped in a coolant fluid flowing through an engine cooling system is provided, the circuit comprises a main conduit having a first and a second end connected to and in fluid communication with a pressure cap throat of a radiator and the engine cooling system respectively via a thermostat valve housing, and an auxiliary conduit having a first and a second end connected to and in fluid communication with the pressure cap throat of the radiator and a thermostat valve housing of a thermostat valve respectively, the auxiliary conduit adapted to continuously facilitate flow of a second part of a coolant fluid flowing out from the engine cooling system to the pressure cap throat and the pressure cap throat adapted to separate and transfer air entrapped in the first and the second part of the heated aerated coolant fluid to a reservoir connected thereto.

No. of Pages : 41 No. of Claims : 6

(12) PATENT APPLICATION PUBLICATION
(21) Application No.3419/MUM/2013 A
(19) INDIA
(22) Date of filing of Application :29/10/2013
(43) Publication Date : 17/07/2015

(54) Title of the invention : AN ENERGY ABSORBING TORSIONAL DAMPER JOINT ASSEMBLY

| | | |
|---|---|---|
| (51) International classification | :F16D3/62, F16F 15/00 | (71)**Name of Applicant :** **1)TATA MOTORS LIMITED** Address of Applicant :Bombay House, 24 Homi Mody Street, Hutatma Chowk, Mumbai 400 001, Maharashtra, India Maharashtra India |
| (31) Priority Document No | :NA | |
| (32) Priority Date | :NA | |
| (33) Name of priority country | :NA | (72)**Name of Inventor :** |
| (86) International Application No | :NA | **1)MAHESH PRATAPRAO SHINDE** |
| Filing Date | :NA | **2)ISHA PATHAK** |
| (87) International Publication No | : NA | **3)ASHISH SHANTARAM WALASE** |
| (61) Patent of Addition to Application Number | :NA | |
| Filing Date | :NA | |
| (62) Divisional to Application Number | :NA | |
| Filing Date | :NA | |

(57) Abstract :
A torsional damper joint assembly (100) comprising: a first shaft member (1) and a second shaft member (2); one end of the first shaft member (1) is connected to a torque generating element and other end is connected to a damper (3) of predetermined shape; one end of the second shaft member (2) is connected to a torque transfer unit and other end is connected to a flexible mounting bracket (4) of predetermined shape; the mounting bracket (4) is fixed to the first shaft member (1) through the damper (3) wherein, the mounting bracket (4) and the damper (3) are positioned in between the first shaft member (1) and the second shaft member (2).

No. of Pages : 16 No. of Claims : 10

(12) PATENT APPLICATION PUBLICATION
(19) INDIA
(22) Date of filing of Application :30/10/2013

(21) Application No.3435/MUM/2013 A
(43) Publication Date : 17/07/2015

(54) Title of the invention : CONTROLLED LIGHTING SYSTEM FOR A VEHICLE

| | |
|---|---|
| (51) International classification | :B60R16/02, B60R16/03, B60Q1/26 |
| (31) Priority Document No | :NA |
| (32) Priority Date | :NA |
| (33) Name of priority country | :NA |
| (86) International Application No | :NA |
| Filing Date | :NA |
| (87) International Publication No | : NA |
| (61) Patent of Addition to Application Number | :NA |
| Filing Date | :NA |
| (62) Divisional to Application Number | :3734/MUM/2012 |
| Filed on | :31/12/2012 |

(71)**Name of Applicant :**
**1)MAHINDRA TWO WHEELERS LIMITED**
Address of Applicant :D1 BLOCK, PLOT NO. 18/2, MIDC, CHINCHWAD, PUNE - 411 019 MAHARASHTRA, INDIA.
(72)**Name of Inventor :**
**1)JASTI KIRANKUMAR**
**2)NERKAR HARSHALA RATILAL**
**3)SUNDARAM SUDHARSHAN**
**4)VENKAT RAMAN YOGARAJA**

(57) Abstract :
The present disclosure discloses a controlled lighting system (10) for a vehicle having an actuator (18) and a controller (20) for illuminating a lighting arrangement (12) of the vehicle when the ignition key (16) of the vehicle is switched from an ON position to an OFF position. The controller (20) processes a triggering signal received via the ignition key (16) to generate a controlling signal. The controlling signal is transmitted to the actuator (18) to actuate the illumination of the lighting arrangement (12) at a pre-determined illumination intensity, corresponding to the triggering signal.

No. of Pages : 14 No. of Claims : 11

(12) PATENT APPLICATION PUBLICATION
(21) Application No.3452/MUM/2013 A
(19) INDIA
(22) Date of filing of Application :31/10/2013
(43) Publication Date : 17/07/2015

(54) Title of the invention : PREPARATION OF MIXED MICROBIAL CULTURE FOR THE WASTE WATER TREATMENT

| | |
|---|---|
| (51) International classification | :C02F3/00, C12N1/26, C02F3/12 |
| (31) Priority Document No | :NA |
| (32) Priority Date | :NA |
| (33) Name of priority country | :NA |
| (86) International Application No | :NA |
| Filing Date | :NA |
| (87) International Publication No | : NA |
| (61) Patent of Addition to Application Number | :NA |
| Filing Date | :NA |
| (62) Divisional to Application Number | :NA |
| Filing Date | :NA |

(71)**Name of Applicant :**
**1)PATHAK SHARAD NARAYAN**
Address of Applicant :96/4, PUSHPANJALI APARTMENT, KANCHAN GALLI, LAW COLLEGE ROAD, PUNE-411004, MAHARASHTRA, INDIA.
(72)**Name of Inventor :**
**1)PATHAK SHARAD NARAYAN**

(57) Abstract :
The composition and preparation of mixed microbial culture by using genetically engineered micro-organism for the treatment of waste water and process of treatment of waste water by using the same.

No. of Pages : 13 No. of Claims : 6

(12) PATENT APPLICATION PUBLICATION
(21) Application No.3456/MUM/2013 A
(19) INDIA
(22) Date of filing of Application :31/10/2013
(43) Publication Date : 17/07/2015

(54) Title of the invention : A BIOSENSOR KIT FOR DETECTION AND ANALYSIS OF CHEMICAL POLLUTANTS

| | |
|---|---|
| (51) International classification | :C12Q1/00, C12Q1/66, C12N15/09 |
| (31) Priority Document No | :NA |
| (32) Priority Date | :NA |
| (33) Name of priority country | :NA |
| (86) International Application No | :NA |
| Filing Date | :NA |
| (87) International Publication No | : NA |
| (61) Patent of Addition to Application Number | :NA |
| Filing Date | :NA |
| (62) Divisional to Application Number | :NA |
| Filing Date | :NA |

(71)**Name of Applicant :**
**1)INDIAN COUNCIL OFAGRICULTURAL RESEARCH**
Address of Applicant :of Krishi Bhavan, Dr. Rajendra Prasad Road, New Delhi 110011, Maharashtra India
(72)**Name of Inventor :**
**1)BHAND SUNIL**
**2)PAL SOUVIK**

(57) Abstract :
The present disclosure relates to a portable biosensor kit (100) and a process for the detection and analysis of acetylcholinesterase deactivating food pollutants present in a food sample. A plurality of samples can be detected simultaneously using this kit. The kit (100) consists of two main containers, a reference container and a sample container. The reference container comprise 3 separate containers namely A, B and C and the sample container comprise 3 separate containers namely A`, B` and C`. The presence of pollutants is confirmed by the difference in colour intensities of the contents of the third reference container and the third sample container.

No. of Pages : 34 No. of Claims : 9

(12) PATENT APPLICATION PUBLICATION
(21) Application No.3458/MUM/2013 A
(19) INDIA
(22) Date of filing of Application :31/10/2013
(43) Publication Date : 17/07/2015

(54) Title of the invention : SUBSTANTIALLY PURE STABLE VILAZODONE HYDROCHLORIDE AND A PROCESS THEREOF

| | |
|---|---|
| (51) International classification | :C07D405/14, A61K31/496 |
| (31) Priority Document No | :NA |
| (32) Priority Date | :NA |
| (33) Name of priority country | :NA |
| (86) International Application No | :NA |
| Filing Date | :NA |
| (87) International Publication No | : NA |
| (61) Patent of Addition to Application Number | :NA |
| Filing Date | :NA |
| (62) Divisional to Application Number | :NA |
| Filing Date | :NA |

(71)**Name of Applicant :**
**1)LUPIN LIMITED**
Address of Applicant :159 CST ROAD, KALINA, SANTACRUZ (EAST), MUMBAI-400 098, STATE OF MAHARASHTRA, INDIA
(72)**Name of Inventor :**
**1)PATIL, NITIN, VILAS**
**2)DESHPANDE, MAHESH, GANPATRAO**
**3)SASANE, SACHIN, ARUN**
**4)VINCHURKAR, ARJUN, NISHIKANT**
**5)THAKARE, DNYANESHWAR, BAPURAO**
**6)VYAS, RAJESH**
**7)SHIVDAVKAR, RADHAKRISHNA, BHIKAJI**
**8)BHISE, NANDU, BABAN**
**9)SINGH, GIRIJ, PAL**

(57) Abstract :
The present invention is directed to substantially pure stable solid dispersion comprising amorphous Vilazodone Hydrochloride, 5-[4-[4-(5-cyano-lH-indol-3-yl) butyl]-l-piperazinyl]-2- benzofuran carboxamide hydrochloride of formula 1a and a pharmaceutically acceptable water soluble polymer and process for preparation thereof.

No. of Pages : 17 No. of Claims : 14

(12) PATENT APPLICATION PUBLICATION
(19) INDIA
(22) Date of filing of Application :30/10/2013
(21) Application No.3440/MUM/2013 A
(43) Publication Date : 17/07/2015

(54) Title of the invention : A PROCESSED COW URINE DRY POWDER AND PROCESS OF PREPARATION FOR THE SAME

| | |
|---|---|
| (51) International classification | :A61K35/22, A61K45/06, A61P35/00 |
| (31) Priority Document No | :NA |
| (32) Priority Date | :NA |
| (33) Name of priority country | :NA |
| (86) International Application No | :NA |
| Filing Date | :NA |
| (87) International Publication No | : NA |
| (61) Patent of Addition to Application Number | :NA |
| Filing Date | :NA |
| (62) Divisional to Application Number | :NA |
| Filing Date | :NA |

(71)**Name of Applicant :**
**1)PITAMBARI PRODUCTS PVT. LTD**
Address of Applicant :HEMENDRA CO.HSG.SOC., 3RD FLOOR, GOKHALE ROAD, THANE - 400 602, Maharashtra India
(72)**Name of Inventor :**
**1)PRABHUDESAI, RAVINDRA VAMAN**
**2)PALKAR; SANTOSH CHANDRAKANT**
**3)MALI; SANDIP SHRIRANG**

(57) Abstract :
The present invention is relates to processed form of cows urine, which is in dry powder form. This dry powder is form of cows urine with high percentage of bio actives. It has high amount of volatile and non-volatile component which are therapeutically very effective. Dry powder form of cows urine shows improved stability and the process to prepare the same is convenient, ecofriendly and economic process.

No. of Pages : 20 No. of Claims : 14

(12) PATENT APPLICATION PUBLICATION
(21) Application No.3442/MUM/2013 A
(19) INDIA
(22) Date of filing of Application :30/10/2013
(43) Publication Date : 17/07/2015

(54) Title of the invention : PROCESS FOR THE PREPARATION OF GLYCEROL PHENYLBUTYRATE

| | |
|---|---|
| (51) International classification | :C07C67/56, C07C67/48, C07C67/14 |
| (31) Priority Document No | :NA |
| (32) Priority Date | :NA |
| (33) Name of priority country | :NA |
| (86) International Application No | :NA |
| Filing Date | :NA |
| (87) International Publication No | : NA |
| (61) Patent of Addition to Application Number | :NA |
| Filing Date | :NA |
| (62) Divisional to Application Number | :NA |
| Filing Date | :NA |

(71)**Name of Applicant :**
**1)LUPIN LIMITED**
Address of Applicant :159 CST ROAD, KALINA, SANTACRUZ (EAST), MUMBAI-400 098, STATE OF MAHARASHTRA, INDIA
(72)**Name of Inventor :**
**1)JADHAV, SANKET, PANDURANG**
**2)MAHAJAN, DEEPAK, PUNA**
**3)NEHATE, SAGAR, PURUSHOTTAM**
**4)GODBOLE, HIMANSHU, MADHAV**
**5)SINGH, GIRIJ, PAL**

(57) Abstract :
The present invention relates to the process for the preparation of glycerol phenylbutyrate (I) by reacting phenylbutyryl chloride (II) with glycerol (III) in presence of organic base in C1-C5 chlorinated solvent. Glycerol phenylbutyrate (I) prepared according the process of the present invention is having HPLC purity >99%.

No. of Pages : 10 No. of Claims : 10

(12) PATENT APPLICATION PUBLICATION
(21) Application No.2622/MUMNP/2012 A
(19) INDIA
(22) Date of filing of Application :23/11/2012
(43) Publication Date : 17/07/2015

(54) Title of the invention : SLIDE RAIL DEVICE FOR VEHICLE

(51) International classification :B60N2/08
(31) Priority Document No :2010-164584
(32) Priority Date :22/07/2010
(33) Name of priority country :Japan
(86) International Application No :PCT/JP2011/061309
Filing Date :17/05/2011
(87) International Publication No :WO 2012/011315
(61) Patent of Addition to Application Number :NA
Filing Date :NA
(62) Divisional to Application Number :NA
Filing Date :NA

(71)**Name of Applicant :**
**1)SHIROKI CORPORATION**
Address of Applicant :2 Kirihara cho Fujisawa shi Kanagawa 2520811 Japan
(72)**Name of Inventor :**
**1)HAYASHI Naoki**

(57) Abstract :
The present invention achieves a slide rail device for a vehicle in which a locking member that constitutes a member for restricting a sliding movement of an upper rail with respect to a lower rail and moves in response to a rotational operation of a lock-release lever is forwardly/rearwardly movable with respect to the upper rail, while the locking portion can be securely returned inside the forwardly/rearwardly-restricted grooves formed in the upper rail when the lock-release lever is returned to the locked position. The solution is a slide rail device including forward/rearward-movement restricting grooves 40 which are formed on an upper rail 35; lock portions 64 which are movable in at least one of the forward direction and the rearward direction relative to the upper rail, wherein the lock portions are lock-engaged with the lock grooves and the forward/rearward-movement restricting grooves when the lock release lever is positioned at the locked position, and wherein the lock portions are released from the lock grooves when the lock release lever is positioned at the unlocked position; and restricting lugs 41 which are formed on a lower rail, wherein the restricting lugs restrict the lock portions from moving forward or rearward from the forward/rearward-movement restricting grooves, to which the lock portions correspond, by the lock portions coming in contact with the restricting lugs when the lock release lever is positioned at the unlocked position.

No. of Pages : 39 No. of Claims : 4

(12) PATENT APPLICATION PUBLICATION
(19) INDIA
(22) Date of filing of Application :01/11/2013
(21) Application No.3485/MUM/2013 A
(43) Publication Date : 17/07/2015

(54) Title of the invention : BATTERY-BANK CARE UNIT

(51) International classification :H02M1/00
(31) Priority Document No :NA
(32) Priority Date :NA
(33) Name of priority country :NA
(86) International Application No :NA
Filing Date :NA
(87) International Publication No : NA
(61) Patent of Addition to Application Number :NA
Filing Date :NA
(62) Divisional to Application Number :NA
Filing Date :NA

(71)**Name of Applicant :**
**1)SHRIKANT HANUMANT KUNDEN**
Address of Applicant :2, GEET GOVIND APT, KOHINOOR COLONY, SAHAKAR NAGAR 2, PUNE-411 009, MAHARASHTRA, INDIA.
(72)**Name of Inventor :**
**1)SHRIKANT HANUMANT KUNDEN**
**2)PRASHANT GHANEKAR**

(57) Abstract :
A system and method of reducing consumption of electricity used to cool electronic computer data center, networking, and telecommunications equipment, and to reduce the incidence of thermal failure of electronic components, includes provision of one or more partitions/chamber for Battery-bank to reduce the volume of the cooled environment, a Battery monitoring system for monitoring the health of batteries and free cooling system preventing dilution of the supplied cooling airflow by warmer air from outside of the reduced volume environment, and controlling the delivery of cooling air flow through the reduced volume of the cooled environment.

No. of Pages : 16 No. of Claims : 6

(12) PATENT APPLICATION PUBLICATION
(19) INDIA
(22) Date of filing of Application :08/12/2014
(21) Application No.2485/MUMNP/2014 A
(43) Publication Date : 17/07/2015

(54) Title of the invention : N ETHYL 4 HYDROXYL 1 METHYL 5 (METHYL(2 3 4 5 6 PENTAHYDROXYHEXYL) AMINO) 2 OXO N PHENYL 1 2 DIHYDROQUINOLINE 3 CARBOXAMIDE

(51) International classification :A61K31/4704
(31) Priority Document No :61/644054
(32) Priority Date :08/05/2012
(33) Name of priority country :U.S.A.
(86) International Application No :PCT/US2013/039911
Filing Date :07/05/2013
(87) International Publication No :WO 2013/169746
(61) Patent of Addition to Application Number :NA
Filing Date :NA
(62) Divisional to Application Number :NA
Filing Date :NA

(71)**Name of Applicant :**
**1)TEVA PHARMACEUTICAL INDUSTRIES LTD.**
Address of Applicant :5 Basel Street P.O. Box 3190 Petach Tikva 49131 Israel
(72)**Name of Inventor :**
**1)LAXER Avital**
**2)ULANENKO Konstantin**

(57) Abstract :
The subject invention provides pharmaceutical compositions Containing laquinimod or a pharmaceutically acceptable salt thereof an isolated compound of N ethyl 4 hydroxyl 1 methyl 5 (methyl (2 3 4 5 6 pentahydroxyhexyl) amino) 2 oxo N phenyl 1 2 dihydroquinoline 3 carboxamide or a salt thereof compositions containing N ethyl 4 hydroxyl 1 methyl 5 (methyl (2 3 4 5 6 pentahydroxyhexyl) amino) 2 oxo N phenyl 1 2 dihydroquinoline 3 carboxamide and methods of preparing the same.

No. of Pages : 41 No. of Claims : 28

(12) PATENT APPLICATION PUBLICATION
(19) INDIA
(22) Date of filing of Application :04/10/2013
(21) Application No.3166/MUM/2013 A
(43) Publication Date : 17/07/2015

(54) Title of the invention : A PRE-MIX READY TO USE PLASTER MADE FROM WASTE FOUNDRY SAND

| | |
|---|---|
| (51) International classification | :C04B 28/00,B22C 1/00 |
| (31) Priority Document No | :NA |
| (32) Priority Date | :NA |
| (33) Name of priority country | :NA |
| (86) International Application No | :NA |
| Filing Date | :NA |
| (87) International Publication No | : NA |
| (61) Patent of Addition to Application Number | :NA |
| Filing Date | :NA |
| (62) Divisional to Application Number | :NA |
| Filing Date | :NA |

(71)**Name of Applicant :**
**1)DHRUVKUMAR RAJIV AGRAWAL**
Address of Applicant :101 THE ARK, S V ROAD, SATACRUZ (W), MUMBAI - 400054. Maharashtra India
**2)RAJEEV VIJAY THAKKAR**
(72)**Name of Inventor :**
**1)RAJEEV VIJAY THAKKAR**
**2)DHRUVKUMAR RAJIV AGRAWAL**

(57) Abstract :
The invention relates to a pre-mix ready to use plaster made from waste foundry sand mixed with crushed sand, fly ash and cement along with admixtures that enhances the product, which is used mainly in construction industry including but not limited to plastering, water proofing, tile adhesive, floor hardener and jointing mortar.

No. of Pages : 8 No. of Claims : 3

(12) PATENT APPLICATION PUBLICATION
(21) Application No.3400/MUM/2013 A
(19) INDIA
(22) Date of filing of Application :29/10/2013
(43) Publication Date : 17/07/2015

(54) Title of the invention : A PROCESS FOR THE PREPARATION OF 1, 3-DIARYL-(1H, 3H)-PYRIMIDINE-2, 4-DIONES UNDER MICROWAVE IRRADIATION.

| | |
|---|---|
| (51) International classification | :C07D239/70, C07D239/74 |
| (31) Priority Document No | :NA |
| (32) Priority Date | :NA |
| (33) Name of priority country | :NA |
| (86) International Application No | :NA |
| Filing Date | :NA |
| (87) International Publication No | : NA |
| (61) Patent of Addition to Application Number | :NA |
| Filing Date | :NA |
| (62) Divisional to Application Number | :NA |
| Filing Date | :NA |

(71)**Name of Applicant :**
**1)DR. M. M. V.RAMANA**
Address of Applicant :DEPARTMENT OF CHEMISTRY, UNIVERSITY OF MUMBAI, VIDYANAGARI, SANTACRUZ (EAST), MUMBAI-400 098, Maharashtra India
(72)**Name of Inventor :**
**1)DR. M. M. V.RAMANA**
**2)DR. SANJAY C. PAWAR**

(57) Abstract :
This invention describes the synthesis of 1, 3-diaryI-(IH. 3H)-pyrimidine-2. 4-diones by subjecting corresponding 2. 4-diaryloxypyrimidines to Chapman rearrangement under microwave irradiation.

No. of Pages : 13 No. of Claims : 10

(12) PATENT APPLICATION PUBLICATION
(21) Application No.3298/MUM/2013 A
(19) INDIA
(22) Date of filing of Application :21/10/2013
(43) Publication Date : 17/07/2015

(54) Title of the invention : CHECKING CLOSED CAPTION CONSISTENCY IN TRANSPORT STREAM IN REAL/DEFERRED TIME

| | |
|---|---|
| (51) International classification | :H04N21/235, H04N17/00 |
| (31) Priority Document No | :NA |
| (32) Priority Date | :NA |
| (33) Name of priority country | :NA |
| (86) International Application No | :NA |
| Filing Date | :NA |
| (87) International Publication No | : NA |
| (61) Patent of Addition to Application Number | :NA |
| Filing Date | :NA |
| (62) Divisional to Application Number | :NA |
| Filing Date | :NA |

(71)**Name of Applicant :**
**1)TEKTRONIX, INC.**
Address of Applicant :14200 SW KARL BRAUN DRIVE, P.O. BOX 500, BEAVERTON, OREGON 97077-0001 U.S.A.
(72)**Name of Inventor :**
**1)MAYUR ANANTWAR**

(57) Abstract :
A machine includes an input port to receive closed caption information, which can be decoded from a transport stream. A calculator calculates a bit rate for the closed caption information. The calculated bit rate for the closed caption information can then be output. An alert can also be generated if the calculated bit rate for the closed caption information is zero for longer than a user-defined period of time.

No. of Pages : 21 No. of Claims : 14

(12) PATENT APPLICATION PUBLICATION
(19) INDIA
(22) Date of filing of Application :11/11/2013
(21) Application No.3548/MUM/2013 A
(43) Publication Date : 17/07/2015

(54) Title of the invention : STABLE SMALL VOLUME PARENTERAL DOSAGE FORM OF SODIUM AMINOSALICYLATE.

| | |
|---|---|
| (51) International classification | :A61K9/16, A61K31/4409, A61K31/44 |
| (31) Priority Document No | :NA |
| (32) Priority Date | :NA |
| (33) Name of priority country | :NA |
| (86) International Application No | :NA |
| Filing Date | :NA |
| (87) International Publication No | : NA |
| (61) Patent of Addition to Application Number | :NA |
| Filing Date | :NA |
| (62) Divisional to Application Number | :NA |
| Filing Date | :NA |

(71)**Name of Applicant :**
**1)RUSAN PHARMA LIMITED**
Address of Applicant :58-D, GOVERNMENT INDUSTRIAL ESTATE, CHARKOP, KANDIVALI (WEST), MUMBAI - 400 067, MAHARASHTRA, INDIA.
(72)**Name of Inventor :**
**1)GOYAL, GAURAV**
**2)DESAI, DILIP KUMAR**
**3)SAXENA, NAVIN**
**4)DOHE, GANESH**

(57) Abstract :
This invention discloses stable, small volume parenteral dosage form with higher systemic bio-availability and lower toxicity of sodium aminosalicylate. This lyophilized formulation comprises combination of sodium aminosalicylate, polyvinyl pyrrolidone and stabilizers. The formulation is stable at temperature less than 30 degree celsius for at least 3 years. The small volume parenteral formulation has a short reconstitution time of less than 1 minute, and is suitable for parenteral administration through various routes such as intravenous, intramuscular, intraperitoneal, or subcutaneous.

No. of Pages : 10 No. of Claims : 7

(12) PATENT APPLICATION PUBLICATION
(19) INDIA
(22) Date of filing of Application :28/10/2013
(21) Application No.3387/MUM/2013 A
(43) Publication Date : 17/07/2015

(54) Title of the invention : A POUCH LEAKAGE DETECTION DEVICE

(51) International classification :G01M3/32
(31) Priority Document No :NA
(32) Priority Date :NA
(33) Name of priority country :NA
(86) International Application No :NA
Filing Date :NA
(87) International Publication No : NA
(61) Patent of Addition to Application Number :NA
Filing Date :NA
(62) Divisional to Application Number :NA
Filing Date :NA

(71)**Name of Applicant :**
**1)ABHISHEK MILIND JAWALE**
Address of Applicant :46/B, SHINDE NAGAR, NEAR SAI MANDIR, YAVATMAL- 445001 (MAHARASHTRA), INDIA
(72)**Name of Inventor :**
**1)DR. ATUL BHASKARRAO BORADE**
**2)ABHISHEK MILIND JAWALE**
**3)ADWAIT RAJENDRA PANDE**
**4)MOHIT RAMESH CHHEDA**
**5)RAHUL SUBHASH TADASE**

(57) Abstract :
A pouch leakage detection device is disclosed. The pouch leakage detection device comprises a pouch feeding means to feed the pouch in a pouch leakage detection means provided to detect leakage from the pouch. A load sensing means provided below the pouch leakage detection means to weigh the pouch. A microcontroller is provided to receive signals from the load sensing means and compare the weight of the pouch with respect to the predefined weight and convey signals to sorting means provided over the load sensing means such that to displace acceptable and rejectable pouch in different direction based on the weight of the pouch.

No. of Pages : 10 No. of Claims : 9

(12) PATENT APPLICATION PUBLICATION
(21) Application No.3388/MUM/2013 A
(19) INDIA
(22) Date of filing of Application :28/10/2013
(43) Publication Date : 17/07/2015

(54) Title of the invention : A METHOD AND SYSTEM FOR TRANSFERRING FUNDS USING UNIQUE INDIVIDUAL IDENTIFIER NUMBERED DIGITAL MONEY ACCOUNT

| | |
|---|---|
| (51) International classification | :G06Q40/00, G06Q20/00, G07D9/00 |
| (31) Priority Document No | :NA |
| (32) Priority Date | :NA |
| (33) Name of priority country | :NA |
| (86) International Application No | :NA |
| Filing Date | :NA |
| (87) International Publication No | : NA |
| (61) Patent of Addition to Application Number | :NA |
| Filing Date | :NA |
| (62) Divisional to Application Number | :NA |
| Filing Date | :NA |

(71)**Name of Applicant :**
**1)PERSISTENT SYSTEMS LIMITED**
Address of Applicant :BHAGEERATH, 402, SENAPATI BAPAT ROAD, PUNE 411 016 Maharashtra India
(72)**Name of Inventor :**
**1)ANIRUDDHA MADHAV GODBOLE**

(57) Abstract :
A method and system for transferring funds using unique individual identifier numbered digital money account. Particularly, the invention provides a method for transferring funds characterized by transferring funds using a unique individual identifier numbered digital money account via an encrypted message using said unique individual identifier number coupled communication devices. Further, the invention provides a method and system for allowing the central entity to share a part of the computational processing workload of users communication device. Furthermore, the invention provides a method and system for avoiding typographical errors in the receiver information. Furthermore, the invention provides a method and system that ensures non-repudiation by the receiver.

No. of Pages : 29 No. of Claims : 22

(12) PATENT APPLICATION PUBLICATION
(19) INDIA
(22) Date of filing of Application :28/10/2013
(21) Application No.3389/MUM/2013 A
(43) Publication Date : 17/07/2015

(54) Title of the invention : PROCESS OF PREPARING A NOVEL TABLET DOSAGE FORM

| | |
|---|---|
| (51) International classification | :A61K9/20, a61k31/00 |
| (31) Priority Document No | :558/MUM/2008 |
| (32) Priority Date | :19/03/2008 |
| (33) Name of priority country | :India |
| (86) International Application No | :NA |
| Filing Date | :NA |
| (87) International Publication No | : NA |
| (61) Patent of Addition to Application Number | :558/MUM/2008 |
| Filed on | :01/01/1900 |
| (62) Divisional to Application Number | :NA |
| Filing Date | :NA |

(71)**Name of Applicant :**
**1)WOCKHARDT LIMITED**
Address of Applicant :WOCKHARDT LIMITED D-4, MIDC Area, Chikalthana, Aurangabad Maharashtra India
(72)**Name of Inventor :**
**1)Jain, Girish Kumar**
**2)Gundu, Ramakant Kashinath**
**3)Dabre, Rahul Sudhakar**

(57) Abstract :
The present invention relates to a process of preparing novel tablet dosage forms, which can be used for different classes of pharmaceutical active ingredients posing stability issues in a single unit system. The dosage form includes a first layer that includes a tablet of one or more active pharmaceutical ingredients, which is inlayed in the first layer along with other pharmaceutically acceptable excipients, and a second layer that includes one or more active pharmaceutical Ingredients optionally with other pharmaceutically acceptable excipients.

No. of Pages : 24 No. of Claims : 6

(12) PATENT APPLICATION PUBLICATION
(19) INDIA
(22) Date of filing of Application :22/10/2013
(21) Application No.3311/MUM/2013 A
(43) Publication Date : 17/07/2015

(54) Title of the invention : AN AYURVEDIC COMPOSITION FOR TOPICAL APPLICATION IN TREATMENT OF BURNS

| | |
|---|---|
| (51) International classification | :A61P17/02, A61K36/00 |
| (31) Priority Document No | :NA |
| (32) Priority Date | :NA |
| (33) Name of priority country | :NA |
| (86) International Application No | :NA |
| Filing Date | :NA |
| (87) International Publication No | : NA |
| (61) Patent of Addition to Application Number | :NA |
| Filing Date | :NA |
| (62) Divisional to Application Number | :NA |
| Filing Date | :NA |

(71)**Name of Applicant :**
**1)GUPTA DR SURENDRA KUMAR**
Address of Applicant :101, MAHAVEER APART., 4/3 PARSI MOHALLA, CHAWWNI, INDORE-452001, M.P., INDIA.
**2)GUPTA ANKITA**
**3)GUPTA SAKSHI**
(72)**Name of Inventor :**
**1)GUPTA DR SURENDRA KUMAR**
**2)GUPTA ANKITA**
**3)GUPTA SAKSHI**

(57) Abstract :
This invention is based on ayurvedic formulation which comprises two or more active ingredients for treatment of burns without leaving any scar mark.

No. of Pages : 10 No. of Claims : 5

(12) PATENT APPLICATION PUBLICATION
(21) Application No.3317/MUM/2013 A
(19) INDIA
(22) Date of filing of Application :22/10/2013
(43) Publication Date : 17/07/2015

(54) Title of the invention : MODIFIED RELEASE PHARMACEUTICAL COMPOSITIONS OF SALSALATE

| | |
|---|---|
| (51) International classification | :A61K9/50, A61K31/618, A61K9/28 |
| (31) Priority Document No | :1277/MUM/2012 |
| (32) Priority Date | :23/04/2012 |
| (33) Name of priority country | :India |
| (86) International Application No | :NA |
| Filing Date | :NA |
| (87) International Publication No | : NA |
| (61) Patent of Addition to Application Number | :1277/MUM/2012 |
| Filed on | :01/01/1900 |
| (62) Divisional to Application Number | :NA |
| Filing Date | :NA |

(71)**Name of Applicant :**
**1)CADILA HEALTHCARE LIMITED**
Address of Applicant :ZYDUS TOWER, SATELLITE CROSS ROADS, AHMEDABAD 380015, GUJARAT, INDIA
(72)**Name of Inventor :**
**1)KOTHARI JAY SHANTILAL**
**2)MUTHAIYYAN ESAKKIMUTHU KANNAN**
**3)MISTRY GAURAV NAVINBHAI**

(57) Abstract :
The present invention relates to modified release pharmaceutical compositions comprising salsalate. The invention also relates to processes for the preparation of such compositions.

No. of Pages : 42 No. of Claims : 22

(12) PATENT APPLICATION PUBLICATION
(19) INDIA
(22) Date of filing of Application :11/12/2014
(21) Application No.2521/MUMNP/2014 A
(43) Publication Date : 17/07/2015

(54) Title of the invention : INFUSION PACKETS AND A PROCESS FOR THEIR MANUFACTURE

(51) International classification :B29C51/04,B29C55/16,B65B29/02
(31) Priority Document No :12176821.2
(32) Priority Date :18/07/2012
(33) Name of priority country :EPO
(86) International Application No :PCT/EP2013/062721
Filing Date :19/06/2013
(87) International Publication No :WO 2014/012731
(61) Patent of Addition to Application Number :NA
Filing Date :NA
(62) Divisional to Application Number :NA
Filing Date :NA

(71)**Name of Applicant :**
**1)UNILEVER PLC**
Address of Applicant :a company registered in England and Wales under company no. 41424 of Unilever House 100 Victoria Embankment London Greater London EC4Y 0DY U.K.
(72)**Name of Inventor :**
**1)WOODWARD Adrian Michael**

(57) Abstract :
The present invention relates to a process for the manufacture of infusion packets the process comprising: (a) providing a first sheet of thermoplastic material (2) which is porous or non porous; (b) thermoforming portions of the first sheet into a three dimensional shape; (c) providing a second sheet of material; (d) dosing an infusible substance into the thermoformed portions of the first sheet or onto the second sheet; (e) sealing the first and second sheets together to form pockets containing the infusible substance such that each pocket includes at least one thermoformed portion of the first sheet; (f) severing the pockets at the seals to form infusion packets each having a chamber containing the infusible substance

No. of Pages : 16 No. of Claims : 15

(12) PATENT APPLICATION PUBLICATION
(19) INDIA
(22) Date of filing of Application :11/12/2014
(21) Application No.2522/MUMNP/2014 A
(43) Publication Date : 17/07/2015

(54) Title of the invention : DESIGNED ANKYRIN REPEAT PROTEINS BINDING TO PLATELET DERIVED GROWTH FACTOR

(51) International classification :C12N15/10,C07K14/49,C07K14/71
(31) Priority Document No :12174020.3
(32) Priority Date :28/06/2012
(33) Name of priority country :EPO
(86) International Application No :PCT/EP2013/063488
Filing Date :27/06/2013
(87) International Publication No :WO 2014/001442
(61) Patent of Addition to Application Number :NA
Filing Date :NA
(62) Divisional to Application Number :NA
Filing Date :NA

(71)**Name of Applicant :**
**1)MOLECULAR PARTNERS AG**
Address of Applicant :Wagistrasse 14 CH 8952 Schlieren Switzerland
(72)**Name of Inventor :**
**1)BAUMANN Michael**

(57) Abstract :
New designed ankyrin repeat proteins with binding specificity for PDGF BB are described as well as nucleic acids encoding such PDGF binding proteins pharmaceutical compositions comprising such proteins and the use of such proteins in the treatment of diseases.

No. of Pages : 54 No. of Claims : 26

(12) PATENT APPLICATION PUBLICATION
(19) INDIA
(22) Date of filing of Application :11/12/2014
(21) Application No.2523/MUMNP/2014 A
(43) Publication Date : 17/07/2015

(54) Title of the invention : ADHESIVE COMPOSITION AND ADHESIVE FOAM SHEET

| | |
|---|---|
| (51) International classification | :C08L21/00,B32B25/04,C08L101/00 |
| (31) Priority Document No | :2012-143909 |
| (32) Priority Date | :27/06/2012 |
| (33) Name of priority country | :Japan |
| (86) International Application No | :PCT/JP2013/067469 |
| Filing Date | :26/06/2013 |
| (87) International Publication No | :WO 2014/003043 |
| (61) Patent of Addition to Application Number | :NA |
| Filing Date | :NA |
| (62) Divisional to Application Number | :NA |
| Filing Date | :NA |

(71)**Name of Applicant :**
**1)SIKA TECHNOLOGY AG**
Address of Applicant :Zugerstrasse 50 CH 6340 Baar Switzerland
(72)**Name of Inventor :**
**1)YAMADA Shunsuke**

(57) Abstract :
The present invention pertains to: an adhesive composition that contains 100 parts by weight of unvulcanized rubber and 20 to 100 parts by weight of an adhesive hydrocarbon resin with a softening point of 40°C or less; and an adhesive foam sheet provided with an adhesive layer containing said adhesive composition and a foaming rubber layer containing a foaming agent a vulcanizing agent and unvulcanized rubber. The present invention enables an adhesive composition which is provided with both good adhesion and workability and is capable of providing an adhesive layer that suppresses cold flow to be provided. The present invention further enables an adhesive foam sheet which has an adhesive layer comprising the adhesive composition and suppresses cold flow to be provided.

No. of Pages : 22 No. of Claims : 9

(12) PATENT APPLICATION PUBLICATION
(19) INDIA
(22) Date of filing of Application :11/11/2013
(21) Application No.3543/MUM/2013 A
(43) Publication Date : 17/07/2015

(54) Title of the invention : PHARMACEUTICAL COMPOSITIONS OF SATURATED LIPID POLYMER MATRIX OF CURCUMIN

(51) International classification :A61K31/05
(31) Priority Document No :NA
(32) Priority Date :NA
(33) Name of priority country :NA
(86) International Application No :NA
Filing Date :NA
(87) International Publication No : NA
(61) Patent of Addition to Application Number :NA
Filing Date :NA
(62) Divisional to Application Number :NA
Filing Date :NA

(71)**Name of Applicant :**
**1)PATRAVALE; VANDANA BHARAT**
Address of Applicant :DEPARTMENT OF PHARMACEUTICAL SCIENCES AND TECHNOLOGY, INSTITUTE OF CHEMICAL TECHNOLOGY, N.P. MARG, MATUNGA, MUMBAI, 400019, MAHARASHTRA, INDIA.
(72)**Name of Inventor :**
**1)PATRAVALE; VANDANA BHARAT**
**2)FERNANDES; CLARA BERNARD**

(57) Abstract :
The present invention relates to a stable pharmaceutical saturated anhydrous and hydrous composition insoluble polyphenol drug, mixture of oils, crystal growth inhibitor, non¬aqueous solvents with or without surfactant, cosurfactant and water. The present invention further relates to process for preparing a stable pharmaceutical composition of sparingly soluble active drug(s) in hard gelatin capsules or liquid solutions.

No. of Pages : 24 No. of Claims : 27

(12) PATENT APPLICATION PUBLICATION
(21) Application No.3342/MUM/2013 A
(19) INDIA
(22) Date of filing of Application :24/10/2013
(43) Publication Date : 17/07/2015

(54) Title of the invention : DEVELOPMENT AND VALIDATION OF STABILITY INDICATING REVERSE PHASE-ULTRA PERFORMANCE LIQUID CHROMATOGRAPHY (RP-UPLC) METHOD FOR DETERMINATION OF PRENOXDIAZINE HC1 IN ITS BULK FORM

| | |
|---|---|
| (51) International classification | :G01N30/36, C07D495/04 |
| (31) Priority Document No | :NA |
| (32) Priority Date | :NA |
| (33) Name of priority country | :NA |
| (86) International Application No | :NA |
| Filing Date | :NA |
| (87) International Publication No | : NA |
| (61) Patent of Addition to Application Number | :NA |
| Filing Date | :NA |
| (62) Divisional to Application Number | :NA |
| Filing Date | :NA |

(71)**Name of Applicant :**
**1)PARUL AROGYA SEVA MANDAL**
Address of Applicant :P.O. LIMDA, TA: WAGHODIA, DIST: VADODARA-391760, GUJARAT, INDIA
(72)**Name of Inventor :**
**1)NAGAR, AKHIL**
**2)SHAH, RONAK**
**3)RAJESH KS**

(57) Abstract :
The method having a purpose of reducing analysis time, increasing reliability via higher resolution with very high pressure due to smaller particles, sensitivity and selectivity as well as economical method by reducing solvent consumption, Reverse Phase-Ultra performance Liquid Chromatography (RP-UPLC) is most promising advancement in a world of chromatography. Being a patented drug, Prenoxdiazine HC1 has not any published analytical background. In this novel research work, a new gradient reverse phase UPLC method was developed for the same in bulk form. Forced degradation study was carried out as per International Conference on Harmonization (ICH) guideline and a newly developed method is applicable to degradation analysis of drug. A chromatographic separation of drug as well as its degradants was achieved using Waters acquity CSH, 2.1 x 100mm, 1.7µm C18 column with gradient of phosphate buffer pH 7.0 and acetonitrile. Drug and degradants were monitored at detection wavelength of 220 nm, the flow rate was 0.4 ml/min, injection volume was 5 µl and temperature of column and auto sampler compartments were ambient. Retention time of drug was about 2.9 mins and relative retention time of common degradant in all stressed conditions is 0.92. The resolution of drug and degradant was greater than 1.7 in all cases. At higher stressed conditions, drug degrades into more fragments as compare to one degradant n optimized stressed condition. Drug shows different solution stability in two different diluents that are acetonitrile and methanol. A developed method was validated as per ICH guideline using validation parameters like precision, linearity and range, specificity, robustness, solution stability and filter compatibility. Results of validation were found satisfactorily within specified acceptance criteria. Forced degradation studies demonstrated the stability indicating power of the UPLC method.

No. of Pages : 21 No. of Claims : 6

(12) PATENT APPLICATION PUBLICATION
(19) INDIA
(22) Date of filing of Application :03/11/2014
(21) Application No.2214/MUMNP/2014 A
(43) Publication Date : 17/07/2015

(54) Title of the invention : DEPOT FORMULATIONS OF A LOCAL ANESTHETIC AND METHODS FOR PREPARATION THEREOF

| | |
|---|---|
| (51) International classification | :A61K9/127,A61K47/10,A61K47/02 |
| (31) Priority Document No | :61/645,066 |
| (32) Priority Date | :10/05/2012 |
| (33) Name of priority country | :U.S.A. |
| (86) International Application No | :PCT/IL2013/050410 |
| Filing Date | :09/05/2013 |
| (87) International Publication No | :WO 2013/168172 |
| (61) Patent of Addition to Application Number | :NA |
| Filing Date | :NA |
| (62) Divisional to Application Number | :NA |
| Filing Date | :NA |

(71)**Name of Applicant :**
**1)PAINREFORM LTD.**
Address of Applicant :4 Hasadnaot Street 4672831 Herzlia Pituah Israel
(72)**Name of Inventor :**
**1)AMSELEM Shimon**
**2)NAVEH Michael**

(57) Abstract :
The invention provides extended release pro liposomal non aqueous pharmaceutical formulations of a local anesthetic in the form of a clear oily solution and methods for making same. The formulations can be administered by infiltration into an incision or by injection.

No. of Pages : 61 No. of Claims : 55

(12) PATENT APPLICATION PUBLICATION
(19) INDIA
(22) Date of filing of Application :03/11/2014
(21) Application No.2215/MUMNP/2014 A
(43) Publication Date : 17/07/2015

(54) Title of the invention : STARCH-BASED PHCH

(51) International classification :C09C1/02,D21H17/00
(31) Priority Document No :12167656.3
(32) Priority Date :11/05/2012
(33) Name of priority country :EPO
(86) International Application No :PCT/EP2013/058884
Filing Date :29/04/2013
(87) International Publication No :WO 2013/167412
(61) Patent of Addition to Application Number :NA
Filing Date :NA
(62) Divisional to Application Number :NA
Filing Date :NA

(71)**Name of Applicant :**
**1)OMYA INTERNATIONAL AG**
Address of Applicant :Baslerstrasse 42 CH 4665 Oftringen Switzerland
(72)**Name of Inventor :**
**1)SENTI WENK Armelle**
**2)GANE Patrick A.C.**
**3)SCHOELKOPF Joachim**

(57) Abstract :
The invention relates to a process for preparing self binding pigment particle suspensions to a self binding pigment particle suspension as well as to a paper product comprising self binding pigment particles and to the use of the self binding pigment particle suspension in paper applications such as in paper coating or as filler material.

No. of Pages : 80 No. of Claims : 27

(12) PATENT APPLICATION PUBLICATION
(21) Application No.2217/MUMNP/2014 A
(19) INDIA
(22) Date of filing of Application :03/11/2014
(43) Publication Date : 17/07/2015

(54) Title of the invention : METHOD AND SYSTEM FOR SEAMLESS WEBPAGE BROWSING

(51) International classification :G06F17/30
(31) Priority Document No :201210149977.0
(32) Priority Date :15/05/2012
(33) Name of priority country :China
(86) International Application No :PCT/CN2013/073804
Filing Date :07/04/2013
(87) International Publication No :WO 2013/170674
(61) Patent of Addition to Application Number :NA
Filing Date :NA
(62) Divisional to Application Number :NA
Filing Date :NA

(71)**Name of Applicant :**
**1)TENCENT TECHNOLOGY (SHENZHEN) COMPANY LIMITED**
Address of Applicant :Room 403 East Block 2 SEG Park Zhenxing Road Futian District Shenzhen Guangdong 518044 China
(72)**Name of Inventor :**
**1)MA Xuemin**
**2)LIU Feng**

(57) Abstract :
Various embodiments providemethods and systems for seamlessly browsing a webpage from a first browser client to a second browser client. When the first browser client receives a pre set browser event a webpage address of a webpage opened by the first browser client can be obtained. The webpage address can then be sent to a server and then obtained from the server when the second browser client is opened. The webpage corresponding to the webpage address can be obtained and outputted through the second browser client. When the second browser client is a mobile terminal browser a persistent connection can be pre established between the second browser client and the server so that the webpage address can be quickly obtained from the server to improve the speed of seamlessly browsing the webpage.

No. of Pages : 28 No. of Claims : 14

(12) PATENT APPLICATION PUBLICATION
(19) INDIA
(22) Date of filing of Application :31/10/2013
(21) Application No.3445/MUM/2013 A
(43) Publication Date : 17/07/2015

(54) Title of the invention : SYSTEM FOR COOLING BRAKE ASSEMBLY OF VEHICLE

| | |
|---|---|
| (51) International classification | :F16D65/847, B60H1/26 |
| (31) Priority Document No | :NA |
| (32) Priority Date | :NA |
| (33) Name of priority country | :NA |
| (86) International Application No | :NA |
| Filing Date | :NA |
| (87) International Publication No | : NA |
| (61) Patent of Addition to Application Number | :NA |
| Filing Date | :NA |
| (62) Divisional to Application Number | :NA |
| Filing Date | :NA |

(71)**Name of Applicant :**
**1)MAHINDRA & MAHINDRA LIMITED**
Address of Applicant :R&D CENTER, AUTOMOTIVE SECTOR, 89, M.I.D.C., SATPUR, NASHIK - 422 007, MAHARASHTRA STATE, INDIA
(72)**Name of Inventor :**
**1)ARVIND VADIRAJ**
**2)SHASHANK MOHAN TIWARI**

(57) Abstract :
Disclosed is a system for cooling a brake assembly of a vehicle. The system comprises a first filter and a housing. The housing includes at least two bearings, a cooling device, and a second filter. The system dissipates heat from the brake assembly by allowing the cooling device to keep rotating even if the rotation of a brake unit of the brake assembly is decelerated.

No. of Pages : 17 No. of Claims : 7

(12) PATENT APPLICATION PUBLICATION
(21) Application No.3451/MUM/2013 A
(19) INDIA
(22) Date of filing of Application :31/10/2013
(43) Publication Date : 17/07/2015

(54) Title of the invention : PREPARATION OF LIQUID OZONE GAS FOR THE WASTE WATER TREATMENT

| | |
|---|---|
| (51) International classification | :C02F1/78, C02F3/12,C01B13/10 |
| (31) Priority Document No | :NA |
| (32) Priority Date | :NA |
| (33) Name of priority country | :NA |
| (86) International Application No | :NA |
| Filing Date | :NA |
| (87) International Publication No | : NA |
| (61) Patent of Addition to Application Number | :NA |
| Filing Date | :NA |
| (62) Divisional to Application Number | :NA |
| Filing Date | :NA |

(71)**Name of Applicant :**
**1)PATHAK SHARAD NARAYAN**
Address of Applicant :96/4, PUSHPANJALI APARTMENT, KANCHAN GALLI, LAW COLLEGE ROAD, PUNE-411004, MAHARASHTRA, INDIA.
(72)**Name of Inventor :**
**1)PATHAK SHARAD NARAYAN**

(57) Abstract :
The preparation of stabilized liquid ozone for the purpose of keeping the liquid ozone at liquid state and further for the treatment of waste water using the same.

No. of Pages : 13 No. of Claims : 4

(12) PATENT APPLICATION PUBLICATION
(19) INDIA
(22) Date of filing of Application :24/09/2013
(21) Application No.3065/MUM/2013 A
(43) Publication Date : 17/07/2015

(54) Title of the invention : DIGITAL SIGNAL ANALYZER SYSTEM

| | |
|---|---|
| (51) International classification | :G06G7/00, G06F17/14, G06G7/19 |
| (31) Priority Document No | :NA |
| (32) Priority Date | :NA |
| (33) Name of priority country | :NA |
| (86) International Application No | :NA |
| Filing Date | :NA |
| (87) International Publication No | : NA |
| (61) Patent of Addition to Application Number | :NA |
| Filing Date | :NA |
| (62) Divisional to Application Number | :NA |
| Filing Date | :NA |

(71)**Name of Applicant :**
**1)ADITYA ANILRAO KURUDE**
Address of Applicant :OMKAR BLDG, DNYANESH PARK, ROAD NO. 2, KRUSHNA CHOWK, PIMPLE-GURAV, PUNE-411061, Maharashtra India
**2)MAYUR ARVIND BHOLE**
**3)TUSHAR RAVINDRA KHOSE**
(72)**Name of Inventor :**
**1)ADITYA ANILRAO KURUDE**
**2)MAYUR ARVIND BHOLE**
**3)TUSHAR RAVINDRA KHOSE**

(57) Abstract :
The invention relates to a digital signal analyzer system having two separate units which is connected with wireless or wired link, involving conversion of an analog signal into digital signal, transferring those samples to the remotely connected portable device, processing it in digital domain using a software and eventually forming a waveform in time and frequency domain, on a remote device for the purpose of analysing said signal to extract useful information on the nature and origin of said analog signal.

No. of Pages : 16 No. of Claims : 9

(12) PATENT APPLICATION PUBLICATION
(19) INDIA
(22) Date of filing of Application :24/09/2013
(21) Application No.3066/MUM/2013 A
(43) Publication Date : 17/07/2015

(54) Title of the invention : POWER TRANSMISSION ASSEMBLY

| | |
|---|---|
| (51) International classification | :F16H33/02, F03G7/10, F16H1/28 |
| (31) Priority Document No | :NA |
| (32) Priority Date | :NA |
| (33) Name of priority country | :NA |
| (86) International Application No | :NA |
| Filing Date | :NA |
| (87) International Publication No | : NA |
| (61) Patent of Addition to Application Number | :NA |
| Filing Date | :NA |
| (62) Divisional to Application Number | :NA |
| Filing Date | :NA |

(71)**Name of Applicant :**
**1)RAYCHEM RPG PRIVATE LIMITED**
Address of Applicant :RPG HOUSE, 463, DR. ANNIE BESANT ROAD, MUMBAI : 400 030, MAHARASHTRA, INDIA
(72)**Name of Inventor :**
**1)AMIT BHATIA**
**2)ALI HIRJI**
**3)S. JEYARAMAN**

(57) Abstract :
The invention describes a power transmission assembly (100) hung between two transmission towers (not shown). The power transmission assembly (100) comprises a conductor assembly (101) comprising a conductor (102) for transmitting electricity at a selected voltage, a semi conductive layer (104) surrounding the conductor (102), the semi conductive layer (104) configured for controlling the electrical stress in the conductor (102), and an insulating layer (106) surrounding the semi conductive layer (104), the insulating layer (106) configured for providing the required level of insulation. The power transmission assembly (100) further comprises a support structure (108) comprising multiple structural elements surrounding the insulating layer (106) of the conductor assembly (101) so as to strengthen the conductor assembly (101) in order to reduce sagging of the conductor assembly (101).

No. of Pages : 22 No. of Claims : 13

(12) PATENT APPLICATION PUBLICATION
(19) INDIA
(22) Date of filing of Application :25/09/2013
(21) Application No.3069/MUM/2013 A
(43) Publication Date : 17/07/2015

(54) Title of the invention : MODIFIED RELEASE SOLID ORAL DOSAGE FORM OF TOPIRAMATE.

| | |
|---|---|
| (51) International classification | :A61K31/357, A61K9/54 |
| (31) Priority Document No | :NA |
| (32) Priority Date | :NA |
| (33) Name of priority country | :NA |
| (86) International Application No | :NA |
| Filing Date | :NA |
| (87) International Publication No | : NA |
| (61) Patent of Addition to Application Number | :NA |
| Filing Date | :NA |
| (62) Divisional to Application Number | :NA |
| Filing Date | :NA |

(71)**Name of Applicant :**
**1)FTF PHARMA PRIVATE LIMITED**
Address of Applicant :505, SAFAL PRELUDE, OPP. PRAHALADNAGAR AUDA GARDEN, SATELITE, AHMEDANAD - 15, GUJARAT, INDIA
(72)**Name of Inventor :**
**1)JAYANT MANDAL**
**2)DEEPAK MAHESHWARI**

(57) Abstract :
The present invention is to provide modified release solid oral dosage form of topiramate or its pharmaceutically acceptable salts or derivatives which maintains an effective plasma drug concentration over an extended period of time and thereby maintain uniform and release rate of the active pharmaceutical ingredient over an extended period of time.

No. of Pages : 9 No. of Claims : 8

(12) PATENT APPLICATION PUBLICATION
(21) Application No.3321/MUM/2013 A
(19) INDIA
(22) Date of filing of Application :23/10/2013
(43) Publication Date : 17/07/2015

(54) Title of the invention : PELLET MAKER

| | |
|---|---|
| (51) International classification | :B29C43/02, C10L 5/00 |
| (31) Priority Document No | :NA |
| (32) Priority Date | :NA |
| (33) Name of priority country | :NA |
| (86) International Application No | :NA |
| Filing Date | :NA |
| (87) International Publication No | : NA |
| (61) Patent of Addition to Application Number | :NA |
| Filing Date | :NA |
| (62) Divisional to Application Number | :NA |
| Filing Date | :NA |

(71)**Name of Applicant :**
**1)Miheer Ravindra Vaidya**
Address of Applicant :91, 'Mauli', Samartha Nagar, Aurangabad 431001, Maharashtra, India
(72)**Name of Inventor :**
**1)Miheer Ravindra Vaidya**

(57) Abstract :
An improved flat-die extrusion process for pelletization of biomass and portable pellet maker for performing said process are disclosed herein the peculiar construction, operation of which allow implementation at even domestic levels yet characterized in uniform yield of high-quality pellets for use as a renewable source of clean energy

No. of Pages : 34 No. of Claims : 12

(12) PATENT APPLICATION PUBLICATION
(21) Application No.3237/MUM/2013 A
(19) INDIA
(22) Date of filing of Application :15/10/2013
(43) Publication Date : 17/07/2015

(54) Title of the invention : SYSTEM(S) AND METHOD(S) FOR STRATEGY DESIGN FOR SERVICE ENGAGMENT MODEL TRANSFORMATION

| | |
|---|---|
| (51) International classification | :G06F9/46, G06Q30/06 |
| (31) Priority Document No | :NA |
| (32) Priority Date | :NA |
| (33) Name of priority country | :NA |
| (86) International Application No | :NA |
| Filing Date | :NA |
| (87) International Publication No | : NA |
| (61) Patent of Addition to Application Number | :NA |
| Filing Date | :NA |
| (62) Divisional to Application Number | :NA |
| Filing Date | :NA |

(71)**Name of Applicant :**
**1)TATA CONSULTANCY SERVICES LIMITED**
Address of Applicant :NIRMAL BUILDING, 9TH FLOOR, NARIMAN POINT, MUMBAI 400021, MAHARASHTRA, INDIA
(72)**Name of Inventor :**
**1)RAI, VEERENDRA KUMAR**
**2)MEHTA, SANJIT**

(57) Abstract :
Disclosed is a method and system for transforming a service engagement from an as-is state model to a to-be state model. The method comprises selecting the to-be state model from a plurality of to-be state models. The to-be state model defines objectives and value parameters for the service engagement. The value parameters impact a realization of the objectives. The method comprises receiving contextual parameters representing constraints and facts for the service engagement. The method comprises identifying a set of strategies, for the realization of the objectives, based on the contextual parameters. A strategy comprises one or more dynamic parameters influencing the value parameters. Further, quantitative values for the one or more dynamic parameters are configured based on quantitative values of targets and tolerances for the objectives and the value parameters. The quantitative values of the one or more dynamic parameters are used to compute quantitative values for the objectives.

No. of Pages : 30 No. of Claims : 17

(12) PATENT APPLICATION PUBLICATION
(21) Application No.3499/MUM/2013 A
(19) INDIA
(22) Date of filing of Application :05/11/2013
(43) Publication Date : 17/07/2015

(54) Title of the invention : A COMBUSTION CHAMBER FOR A DIESEL ENGINE

(51) International classification :F02B19/14
(31) Priority Document No :NA
(32) Priority Date :NA
(33) Name of priority country :NA
(86) International Application No :NA
Filing Date :NA
(87) International Publication No : NA
(61) Patent of Addition to Application Number :NA
Filing Date :NA
(62) Divisional to Application Number :NA
Filing Date :NA

(71)**Name of Applicant :**
**1)MAHINDRA & MAHINDRA LIMITED**
Address of Applicant :MAHINDRA TOWERS, WORLI, MUMBAI - 400 018, MAHARASHTRA, INDIA.
(72)**Name of Inventor :**
**1)JUTTU SIMHACHALAM**
**2)GHODKE PUNDLIK RAMBHAJI**
**3)MEHROTRA AAYUSH**

(57) Abstract :
A combustion chamber for an engine receives air from a port and fuel sprayed by an injector. The combustion chamber is defined by a cylinder and a piston. The cylinder includes a cylinder head and a cylinder wall extending from cylinder head. The piston slides with respect to the cylinder wall as the piston reciprocates and includes a piston crown and a skirt. The piston crown has a receiving cavity recessed on an operative top face thereof. The receiving cavity is so profiled that a first curved sub-profile proximal to an operative top face of the piston and a second curved sub-profile defining side wall profile thereof are connected by a first straight sub-profile that is orthogonal to the operative top face of the piston for defining a throat for facilitating fuel to reach the interior of the receiving cavity and mixing of air and fuel inside the receiving cavity.

No. of Pages : 36 No. of Claims : 9

(12) PATENT APPLICATION PUBLICATION
(19) INDIA
(22) Date of filing of Application :31/10/2013
(21) Application No.3469/MUM/2013 A
(43) Publication Date : 17/07/2015

(54) Title of the invention : AN IMPROVED PROCESS FOR THE PREPARATION OF AMORPHOUS (R)-(+)-LANSOPRAZOLE

| | |
|---|---|
| (51) International classification | :C07D401/12, A61P1/04, A61K31/4439 |
| (31) Priority Document No | :NA |
| (32) Priority Date | :NA |
| (33) Name of priority country | :NA |
| (86) International Application No | :NA |
| Filing Date | :NA |
| (87) International Publication No | : NA |
| (61) Patent of Addition to Application Number | :NA |
| Filing Date | :NA |
| (62) Divisional to Application Number | :NA |
| Filing Date | :NA |

(71)**Name of Applicant :**
**1)CADILA HEALTHCARE LIMITED**
Address of Applicant :CADILA HEALTHCARE LIMITED ZYDUS TOWER, SATELLITE CROSS ROADS AHMEDABAD-380015 Gujarat India
(72)**Name of Inventor :**
**1)DWIVEDI SHRI PRAKASH DHAR**
**2)PRASAD ASHOK**
**3)PADMANABHAN RAMAR**
**4)SINGH RAMESH CHANDRA**
**5)PAL DAYA RAM**

(57) Abstract :
The present invention relates to an improved process for the preparation of amorphous (R)-(+)-lansoprazole. In particular, the present invention relates to improved process for the preparation of amorphous dexlansoprazole. The invention also relates pharmaceutical compositions that include amorphous dexlansoprazole substantially free from crystalline forms (I)

No. of Pages : 23 No. of Claims : 10

(12) PATENT APPLICATION PUBLICATION
(21) Application No.153/CHE/2014 A
(19) INDIA
(22) Date of filing of Application :13/01/2014
(43) Publication Date : 17/07/2015

(54) Title of the invention : CLUTCH CALIBRATION MEANS AND CONTROL MECHANISM FOR AN AUTOMATED MANUAL TRANSMISSION BASED VEHICLE

(51) International classification :F16D
(31) Priority Document No :NA
(32) Priority Date :NA
(33) Name of priority country :NA
(86) International Application No :NA
Filing Date :NA
(87) International Publication No : NA
(61) Patent of Addition to Application Number :NA
Filing Date :NA
(62) Divisional to Application Number :NA
Filing Date :NA

(71)**Name of Applicant :**
**1)M/S TVS MOTOR COMPANY LIMITED**
Address of Applicant :NO. 29, HADDOWS ROAD, CHENNAI - 600 006 Tamil Nadu India
(72)**Name of Inventor :**
**1)HIMADRI BHUSHAN DAS**
**2)NAGA KAVITHA KOMMURI**
**3)SAMRAJ JABEZ DHINAGAR**

(57) Abstract :
The current invention proposes a system where the free-play distance of the Clutch System is monitored using the ECU 1 in real time for certain operating states. Here, the system pushes the Clutch Actuation System to the extreme end of the free-play region. This value is pre-determined and stored in the ECU 1. Using limited power the Clutch Actuation System is activated which moves towards the push lever of the clutch. The rate of change of CPS is monitored and when this becomes constant, the free-play variable is updated with the current value of the CPS. Further, the clutch operating region is recalculated accordingly. It therefore provides an improved uniform behavior during different operating phases of the vehicle with respect to the currently used system.

No. of Pages : 14 No. of Claims : 8

(12) PATENT APPLICATION PUBLICATION
(21) Application No.4163/CHENP/2014 A
(19) INDIA
(22) Date of filing of Application :04/06/2014
(43) Publication Date : 17/07/2015

(54) Title of the invention : CLASP FOR A WATCH STRAP OR BELT

(51) International classification :A44C5/24
(31) Priority Document No :11192833.9
(32) Priority Date :09/12/2011
(33) Name of priority country :EPO
(86) International Application No :PCT/EP2012/068255
Filing Date :17/09/2012
(87) International Publication No :WO 2013/083305
(61) Patent of Addition to Application Number :NA
Filing Date :NA
(62) Divisional to Application Number :NA
Filing Date :NA

(71)**Name of Applicant :**
**1)OMEGA SA**
Address of Applicant :Rue Stmpfli 96 CH 2500 Biel/Bienne 4 Switzerland
(72)**Name of Inventor :**
**1)KALTENRIEDER Cdric**
**2)CATANESE Rocco**

(57) Abstract :
Clasp for a watch strap comprising a cover (2) connected at a first end to a first length of strap (4) and at a second end to a second length of strap (8) connecting means being interposed between the second length of strap (8) and the cover (2) of the clasp (1) these connecting means comprising a terminal link (10) sliding in a longitudinal direction of the clasp (1) between a first position in which the terminal link (10) is at least partially engaged in the cover (2) of the clasp (1) and a second position in which the terminal link (10) is free of the cover (2) of the clasp (1) the terminal link (10) comprising a push button (32) the pressing of which makes it possible to cause a toothed element (34) to move from a first position in which the toothed element (34) is in gnash with rack teeth (14) secured to the cover (2) of the clasp (1) into a second position in which the toothed element (34) is released of its engagement with the rack teeth (14) the clasp being characterized in that the terminal link (10) has a housing (28) in which there is at least one spring (30) this spring (30) being capped by the push button (32).

No. of Pages : 15 No. of Claims : 10

(12) PATENT APPLICATION PUBLICATION
(19) INDIA
(22) Date of filing of Application :04/06/2014
(21) Application No.4164/CHENP/2014 A
(43) Publication Date : 17/07/2015

(54) Title of the invention : LUBRICATING OIL COMPOSITION

(51) International classification :C10M169/04,C10N10/12,C10N10/04
(31) Priority Document No :2011268417
(32) Priority Date :07/12/2011
(33) Name of priority country :Japan
(86) International Application No :PCT/EP2012/074820
Filing Date :07/12/2012
(87) International Publication No :WO 2013/083791
(61) Patent of Addition to Application Number :NA
Filing Date :NA
(62) Divisional to Application Number :NA
Filing Date :NA

(71)**Name of Applicant :**
**1)SHELL INTERNATIONALE RESEARCH MAATSCHAPPIJ B.V.**
Address of Applicant :Carel van Bylandtlaan 30 NL 2596 HR The Hague Netherlands
**2)SHELL OIL COMPANY**
(72)**Name of Inventor :**
**1)KUBO Kouichi**
**2)HUNYUDA Kiyoshi**

(57) Abstract :
A lubricating oil composition comprising (A) a lubricating oil base oil the kinematic viscosity of which at 100°C is in the range of from 1.4 to 6 mm/s (B) from 250 to 2000 ppm in terms of molybdenum of a molybdenum dialkyldithiocarbamate (C) from 20 to 500 ppm in terms of sulphur of tetrabenzyl thiuram disulphide and (D) from 0.05 to 3.0 mass% of an amine. The lubricating oil composition of the present invention has a superior friction reducing effect and which has a superior fuel economy effect.

No. of Pages : 58 No. of Claims : 10

(12) PATENT APPLICATION PUBLICATION
(19) INDIA
(22) Date of filing of Application :04/06/2014
(21) Application No.4165/CHENP/2014 A
(43) Publication Date : 17/07/2015

(54) Title of the invention : ASPHALT COMPOSITION

(51) International classification :C08L95/00,E01C7/18
(31) Priority Document No :4281/CHE/2011
(32) Priority Date :08/12/2011
(33) Name of priority country :India
(86) International Application No :PCT/EP2012/074834
Filing Date :07/12/2012
(87) International Publication No :WO 2013/083798
(61) Patent of Addition to Application Number :NA
Filing Date :NA
(62) Divisional to Application Number :NA
Filing Date :NA

(71)**Name of Applicant :**
**1)SHELL INTERNATIONALE RESEARCH MAATSCHAPPIJ B.V.**
Address of Applicant :Carel van Bylandtlaan 30 NL 2596 HR The Hague Netherlands
**2)SHELL OIL COMPANY**
(72)**Name of Inventor :**
**1)STRICKLAND David**
**2)CHUGHTAI Majid Jamshed**
**3)ASHTEKAR Sunil**

(57) Abstract :
An asphalt composition comprising aggregate bitumen sulphur and surfactant wherein the surfactant is selected from cationic surfactants amphoteric surfactants and mixtures thereof. Methods of preparing asphalt compositions and asphalt pavements are also disclosed.

No. of Pages : 19 No. of Claims : 13

(12) PATENT APPLICATION PUBLICATION
(19) INDIA
(22) Date of filing of Application :04/06/2014
(21) Application No.4166/CHENP/2014 A
(43) Publication Date : 17/07/2015

(54) Title of the invention : GOLD TIMEPIECE OR JEWELLERY PART

(51) International classification :C22C5/02,A44C27/00,G04B37/22
(31) Priority Document No :11188305.4
(32) Priority Date :08/11/2011
(33) Name of priority country :EPO
(86) International Application No :PCT/EP2012/071962
Filing Date :07/11/2012
(87) International Publication No :WO 2013/068365
(61) Patent of Addition to Application Number :NA
Filing Date :NA
(62) Divisional to Application Number :NA
Filing Date :NA

(71)**Name of Applicant :**
**1)THE SWATCH GROUP RESEARCH AND DEVELOPMENT LTD**
Address of Applicant :Rue des Sors 3 CH 2074 Marin Switzerland
(72)**Name of Inventor :**
**1)LAUPER Stphane**
**2)DUBACH Alban**
**3)VINCENT Denis**
**4)KLAY Edwina**
**5)NEVEU Bruno**

(57) Abstract :
The invention relates to a timepiece or jewellery part manufactured in a nickel free and cobalt free gold alloy the composition of which comprises by weight between 75% and 77.5% of gold between 1.2% and 1.6% of palladium and between 20.1% and 23.8% of copper.

No. of Pages : 14 No. of Claims : 16

(12) PATENT APPLICATION PUBLICATION
(19) INDIA
(22) Date of filing of Application :04/06/2014
(21) Application No.4170/CHENP/2014 A
(43) Publication Date : 17/07/2015

(54) Title of the invention : FUEL SUPPLY UNIT

| | |
|---|---|
| (51) International classification | :F02M37/10,F02M37/20,F02M37/22 |
| (31) Priority Document No | :2011265470 |
| (32) Priority Date | :05/12/2011 |
| (33) Name of priority country | :Japan |
| (86) International Application No | :PCT/JP2012/079024 |
| Filing Date | :08/11/2012 |
| (87) International Publication No | :WO 2013/084660 |
| (61) Patent of Addition to Application Number | :NA |
| Filing Date | :NA |
| (62) Divisional to Application Number | :NA |
| Filing Date | :NA |

(71)**Name of Applicant :**
**1)KEIHIN CORPORATION**
Address of Applicant :26 2 Nishishinjuku 1 chome Shinjuku ku Tokyo 1630539 Japan
(72)**Name of Inventor :**
**1)YOSHIDA Hiroshi**

(57) Abstract :
In a fuel supply unit (10) a vapor discharge passage (42) for discharging vapor is formed in an intake side holder (34) constituting a holder (16) and a strainer (20) is mounted on the top end of the vapor discharge passage (42). The strainer (20) comprises a porous body (58) having an outer periphery surface formed into a webbing and a housing (60) for holding the porous body (58) the housing (60) being provided with a communication hole (66) facing the top part of the porous body (58). When fuel is supplied to a fuel tank (12) after the fuel tank (12) and a pump chamber (38) have been completely empty of fuel gas remaining in the pump chamber (38) is discharged through the porous body (58) and out to the exterior from the communication hole (66).

No. of Pages : 28 No. of Claims : 8

(12) PATENT APPLICATION PUBLICATION
(19) INDIA
(22) Date of filing of Application :04/06/2014
(21) Application No.4171/CHENP/2014 A
(43) Publication Date : 17/07/2015

(54) Title of the invention : CONTENTION FREE MEMORY ARRANGEMENT

(51) International classification :G11C7/00,G11C8/00
(31) Priority Document No :13/314079
(32) Priority Date :07/12/2011
(33) Name of priority country :U.S.A.
(86) International Application No :PCT/US2012/058039
Filing Date :28/09/2012
(87) International Publication No :WO 2013/085606
(61) Patent of Addition to Application Number :NA
Filing Date :NA
(62) Divisional to Application Number :NA
Filing Date :NA

(71)**Name of Applicant :**
**1)XILINX INC.**
Address of Applicant :Attn: Legal Dept. 2100 Logic Drive San Jose CA 95124 U.S.A.
(72)**Name of Inventor :**
**1)WU Ephrem C.**
**2)SAHARIA Gyanesh**

(57) Abstract :
A memory arrangement (200) includes a plurality of memory blocks (208) a first group of access ports (204) and a second group of access ports (206). Routing circuitry (209) couples each pair of the first and second groups of access ports to a respective one of the memory blocks. Each pair includes a first access port from the first group and a second access port from the second group. The first access port has write access to a first portion of the respective memory blocks but not to a second portion of the memory block and has read access to the second portion but not to the first portion. The second access port has write access to the second portion but not to the first portion and has read access to the first portion but not to the second portion.

No. of Pages : 27 No. of Claims : 15

(12) PATENT APPLICATION PUBLICATION
(19) INDIA
(22) Date of filing of Application :04/06/2014
(21) Application No.4172/CHENP/2014 A
(43) Publication Date : 17/07/2015

(54) Title of the invention : ELECTRIC PROPULSION SYSTEM

(51) International classification :H02K16/00
(31) Priority Document No :TO2011A001119
(32) Priority Date :07/12/2011
(33) Name of priority country :Italy
(86) International Application No :PCT/IB2012/056632
Filing Date :22/11/2012
(87) International Publication No :WO 2013/084101
(61) Patent of Addition to Application Number :NA
Filing Date :NA
(62) Divisional to Application Number :NA
Filing Date :NA

(71)**Name of Applicant :**
**1)OTO MELARA S.P.A.**
Address of Applicant :Via Valdilocchi 15 I 19136 La Spezia Italy
(72)**Name of Inventor :**
**1)LA SPINA Giovanni**
**2)LAZZARI Sandro**
**3)BELLOTTI Carlo Felice**

(57) Abstract :
Electric propulsion system with at least two shafts comprising at least two electric motors of which at least one first motor 3 and at least one second motor 4 each one comprising a stator S and a rotor R. Said propulsion system comprises furthermore a fixing system 5 adapted to lock the stators S of said motors to one another. Said first motor 3 is a motor in which the stator S is arranged in an inner position with respect to the rotor R which is arranged on the outside of said stator SH and the second motor 4 is a motor in which the stator S is arranged in an outer position with respect to the rotor R which is arranged on the inside of said stator S.

No. of Pages : 15 No. of Claims : 7

(12) PATENT APPLICATION PUBLICATION
(19) INDIA
(22) Date of filing of Application :04/06/2014
(21) Application No.4173/CHENP/2014 A
(43) Publication Date : 17/07/2015

(54) Title of the invention : CARBON FIBRE FOR COMPOSITE MATERIALS WITH ENHANCED CONDUCTIVITY

(51) International classification :D06M11/74,B82Y30/00,C08J5/24
(31) Priority Document No :11192309.0
(32) Priority Date :07/12/2011
(33) Name of priority country :EPO
(86) International Application No :PCT/EP2012/074649
Filing Date :06/12/2012
(87) International Publication No :WO 2013/083696
(61) Patent of Addition to Application Number :NA
Filing Date :NA
(62) Divisional to Application Number :NA
Filing Date :NA

(71)**Name of Applicant :**
**1)TOHO TENAX EUROPE GMBH**
Address of Applicant :Kasinostrasse 19 21 42103 Wuppertal Germany
(72)**Name of Inventor :**
**1)WITZEL Silke**
**2)WOHLMANN Bernd**
**3)STSGEN Silke**

(57) Abstract :
The invention relates to a conductively furnished carbon fibre consisting of carbon fibre filaments which have a metal coating the carbon fibre filaments having a preparation which is located on the metal coating and is based on at least one polymeric binder said preparation comprising conductive nanoparticles the concentration of the metal coating being 8 to 25 wt% and the concentration of the carbon nanotubes being 0.1 to 1 wt% based in each case on the weight of the carbon fibre provided with the metal coating and preparation. The invention further relates to a method for producing such fibres and also to a fibre reinforced composite material comprising carbon fibres consisting of carbon fibre filaments the carbon fibre filaments being coated with a metal and to a polymer based matrix the fibre volume fraction in the composite material being 45 to 70 volume % and the composite material further comprising conductive nanoparticles which are present at least partly in dispersion in the matrix.

No. of Pages : 24 No. of Claims : 15

(12) PATENT APPLICATION PUBLICATION
(19) INDIA
(22) Date of filing of Application :04/06/2014
(21) Application No.4186/CHENP/2014 A
(43) Publication Date : 17/07/2015

(54) Title of the invention : SYSTEMS METHODS AND DEVICES TO PERFORM INTERLEAVING

(51) International classification :H04L1/00,H04L27/26
(31) Priority Document No :61/566582
(32) Priority Date :02/12/2011
(33) Name of priority country :U.S.A.
(86) International Application No :PCT/US2012/067617
Filing Date :03/12/2012
(87) International Publication No :WO 2013/082604
(61) Patent of Addition to Application Number :NA
Filing Date :NA
(62) Divisional to Application Number :NA
Filing Date :NA

(71)**Name of Applicant :**
**1)QUALCOMM INCORPORATED**
Address of Applicant :Attn: International IP Administration 5775 Morehouse Drive San Diego California 92121 1714 U.S.A.
(72)**Name of Inventor :**
**1)YANG Lin**
**2)VAN NEE Didier Johannes Richard**
**3)SAMPATH Hemanth**
**4)VERMANI Sameer**

(57) Abstract :
An apparatus includes an interleaver configured to interleave encoded data and to output a series of interleaved bits to be transmitted via a 1 MHz orthogonal frequency division multiplexing (OFDM) transmission. The apparatus also includes a modulator configured to modulate the interleaved bits and a transform module configured to transform the modulated bits. A transmit module of the apparatus is configured to transmit the transformed bits included in one or more spatial streams of the 1 MHz OFDM transmission.

No. of Pages : 66 No. of Claims : 45

(12) PATENT APPLICATION PUBLICATION
(19) INDIA
(22) Date of filing of Application :04/06/2014
(21) Application No.4187/CHENP/2014 A
(43) Publication Date : 17/07/2015

(54) Title of the invention : VACCINES AGAINST CLOSTRIDIUM DIFFICILE COMPRISING RECOMBINANT TOXINS

(51) International classification :C07K14/33
(31) Priority Document No :61/591631
(32) Priority Date :27/01/2012
(33) Name of priority country :U.S.A.
(86) International Application No :PCT/US2013/023189
Filing Date :25/01/2013
(87) International Publication No :WO 2013/112867
(61) Patent of Addition to Application Number :NA
Filing Date :NA
(62) Divisional to Application Number :NA
Filing Date :NA

(71)**Name of Applicant :**
**1)MERCK SHARP & DOHME CORP.**
Address of Applicant :126 East Lincoln Avenue Rahway New Jersey 07065 0907 U.S.A.
**2)INTERVET INTERNATIONAL B.V.**
(72)**Name of Inventor :**
**1)HEINRICHS Jon Henry**
**2)BODMER Jean Luc**
**3)SECORE Susan Lynn**
**4)GOERKE Aaron Rudy**
**5)CARO AGUILAR Ivette**
**6)GENTILE Marie Pierre**
**7)HORTON Melanie S.**
**8)MIEZEIEWSKI Matthew Ryan**
**9)SKINNER Julie M.**
**10)SONDERMEIJER Paulus Jacobus Antonius**
**11)SUBRAMANIAN Shyamsundar**
**12)HEIJDEN LIEFKENS Karin Huberdina Antonia van der**
**13)WANG Su**
**14)XIE Jinfu**
**15)XOCONOSTLE Rachel Flora**
**16)ZORMAN Julie K.**

(57) Abstract :
The present invention relates to recombinant C. toxin A (TcdA) and toxin B (TcdB) and binary toxin A (CDTa) proteins comprising specifically defined mutations relative to the native toxin sequence that substantially reduce or eliminate toxicity. The invention also relates to vaccines and immunogenic compositions comprising these recombinant toxins as well as combinations of these toxins with binary toxin B (CDTb) which are capable of providing protection against C. infection and/or the effects thereof. The invention also relates to methods of inducing an immune response to C. comprising administering the vaccines and immunogenic compositions described herein to a patient. The invention also encompasses methods of expressing recombinant C. toxin A and toxin B and CDTa mutants and CDTb in recombinant expression systems. In exemplary embodiments TcdA TcdB and CDTa mutant toxins comprising sufficient mutations to substantially reduce or eliminate toxicity are expressed in the baculovirus/insect cell expression system.

No. of Pages : 87 No. of Claims : 44

(12) PATENT APPLICATION PUBLICATION
(19) INDIA
(22) Date of filing of Application :05/06/2014
(21) Application No.4188/CHENP/2014 A
(43) Publication Date : 17/07/2015

(54) Title of the invention : METHODS AND APPARATUSES FOR MOBILE VISUAL SEARCH

(51) International classification :G06K9/62,G06F17/30
(31) Priority Document No :13/290658
(32) Priority Date :07/11/2011
(33) Name of priority country :U.S.A.
(86) International Application No :PCT/FI2012/051062
Filing Date :01/11/2012
(87) International Publication No :WO 2013/068638
(61) Patent of Addition to Application Number :NA
Filing Date :NA
(62) Divisional to Application Number :NA
Filing Date :NA

(71)**Name of Applicant :**
**1)NOKIA CORPORATION**
Address of Applicant :Keilalahdentie 4 FI 02150 Espoo Finland
**2)BOARD OF TRUSTEES OF THE LELAND STANFORD JUNIOR UNIVERSITY**
(72)**Name of Inventor :**
**1)VEDANTHAM Ramakrishna**
**2)GRZESZCZUK Radek**
**3)CHEN David Mo**
**4)TSAI Shang Hsuan**
**5)GIROD Bernd**

(57) Abstract :
Methods apparatuses and computer program products are herein provided for providing a REVV system that is configured to provide an MVS that is operable on a mobile terminal. One example method may include causing a plurality of vector word residuals to be aggregated for at least one visual word using local feature descriptors extracted from an image. The method may further include causing the dimensionality of the aggregated at least one vector word residual for each visual word to be reduced by using a classification aware linear discriminant analysis. The method may further include computing using a processor a weighted correlation for at least one compact image signature that is binarized from the aggregated at least one vector word residual when compared to a list of candidates. The method may further include determining a ranked list of candidates based on the computed weighted correlation.

No. of Pages : 31 No. of Claims : 20

(12) PATENT APPLICATION PUBLICATION
(19) INDIA
(22) Date of filing of Application :05/06/2014
(21) Application No.4189/CHENP/2014 A
(43) Publication Date : 17/07/2015

(54) Title of the invention : SYSTEM CONTROLLER AND METHOD FOR DETERMINING CONDUCTANCE OF AN OBJECT

(51) International classification :G01R27/26
(31) Priority Document No :61/568224
(32) Priority Date :08/12/2011
(33) Name of priority country :U.S.A.
(86) International Application No :PCT/IB2012/056128
Filing Date :02/11/2012
(87) International Publication No :WO 2013/084091
(61) Patent of Addition to Application Number :NA
Filing Date :NA
(62) Divisional to Application Number :NA
Filing Date :NA

(71)**Name of Applicant :**
**1)KIMBERLY CLARK WORLDWIDE INC.**
Address of Applicant :2300 Winchester Road Neenah Wisconsin 54956 U.S.A.
(72)**Name of Inventor :**
**1)FELDKAMP Joseph R.**

(57) Abstract :
A system for determining a conductance of an object includes a sensor configured to emit an electromagnetic field when an excitation signal is received wherein the electromagnetic field interacts with the object when the object is positioned within the electromagnetic field. A signal processing circuit is coupled to the sensor and configured to provide an adjustable capacitance to the sensor to adjust a phase angle of a current flowing through the sensor to generate a voltage measurement representative of a voltage across the sensor and to generate a current measurement representative of the current flowing through the sensor. A controller is coupled to the signal processing circuit and configured to calculate an admittance of the sensor based on the voltage measurement and the current measurement and to determine a conductance of the object based on the calculated admittance of the sensor.

No. of Pages : 37 No. of Claims : 20

(12) PATENT APPLICATION PUBLICATION
(21) Application No.4221/CHENP/2014 A
(19) INDIA
(22) Date of filing of Application :06/06/2014
(43) Publication Date : 17/07/2015

(54) Title of the invention : COOLING TANK FOR RAILS

(51) International classification :C21D1/63,C21D1/64,C21D9/04
(31) Priority Document No :MI2011A002052
(32) Priority Date :11/11/2011
(33) Name of priority country :Italy
(86) International Application No:PCT/IB2012/056345
Filing Date :12/11/2012
(87) International Publication No :WO 2013/068998
(61) Patent of Addition to Application Number :NA
Filing Date :NA
(62) Divisional to Application Number :NA
Filing Date :NA

(71)**Name of Applicant :**
**1)DANIELI & C. OFFICINE MECCANICHE S.P.A.**
Address of Applicant :Via Nazionale 41 I 33041 Buttrio Italy
(72)**Name of Inventor :**
**1)ANDREATTA Daniele**

(57) Abstract :
A cooling tank for the thermal treatment of a rail head provided with a structure comprising a first volume (2) adapted to be filled with a cooling fluid; a second volume (4) arranged above the first volume and communicating therewith so that the fluid passes from the first to the second volume and the rail head to be thermally treated can be immersed therein; a partition plate (5) between first and second volume provided with a single row of holes (6) preferably arranged at the center of the width of the second volume for generating jets of cooling fluid from the first to the second volume; a pair of longitudinal bulkheads (7) arranged in said second volume perpendicular to the plate and symmetrically with respect to the single row of holes adapted to direct the jets of fluid exiting from the holes vertically upwards.

No. of Pages : 27 No. of Claims : 18

(12) PATENT APPLICATION PUBLICATION
(19) INDIA
(22) Date of filing of Application :06/06/2014
(21) Application No.4222/CHENP/2014 A
(43) Publication Date : 17/07/2015

(54) Title of the invention : THERAPEUTIC AGENT FOR JOINT DISEASES

(51) International classification :A61K31/662,A61P19/02,A61P29/00
(31) Priority Document No :2011247047
(32) Priority Date :11/11/2011
(33) Name of priority country :Japan
(86) International Application No :PCT/JP2012/076478
Filing Date :12/10/2012
(87) International Publication No :WO 2013/069404
(61) Patent of Addition to Application Number :NA
Filing Date :NA
(62) Divisional to Application Number :NA
Filing Date :NA

(71)**Name of Applicant :**
**1)SANSHO CO. LTD.**
Address of Applicant :3rd Floor Toyo Bldg. 1 2 10 Nihonbashi Chuo ku Tokyo 1030027 Japan
(72)**Name of Inventor :**
**1)MUROFUSHI Kimiko**
**2)MASUDA Ikuko**
**3)MOROHOSHI Toshiro**

(57) Abstract :
The purpose of the present invention is to provide a therapeutic agent for joint diseases which has an activity of preventing the destruction of articular cartilages and has a high therapeutic effect. According to the present invention a therapeutic agent for joint diseases can be provided which comprises cyclic phosphatidic acid or carbacyclic phosphatidic acid as an active ingredient.

No. of Pages : 41 No. of Claims : 1

(12) PATENT APPLICATION PUBLICATION
(19) INDIA
(22) Date of filing of Application :06/06/2014
(21) Application No.4223/CHENP/2014 A
(43) Publication Date : 17/07/2015

(54) Title of the invention : PRECOMBUSTOR SYSTEM AND METHOD FOR COMBUSTION FOR BIOMASS

(51) International classification :F23L7/00,F23C3/00,F23C6/04
(31) Priority Document No :61/558531
(32) Priority Date :11/11/2011
(33) Name of priority country :U.S.A.
(86) International Application No :PCT/US2012/063936
Filing Date :07/11/2012
(87) International Publication No :WO 2013/070761
(61) Patent of Addition to Application Number :NA
Filing Date :NA
(62) Divisional to Application Number :NA
Filing Date :NA

(71)**Name of Applicant :**
**1)AIR PRODUCTS AND CHEMICALS INC.**
Address of Applicant :7201 Hamilton Boulevard Allentown Pennsylvania 18195 1501 U.S.A.
(72)**Name of Inventor :**
**1)DAGOSTINI Mark Daniel**
**2)SLAVEJKOV Aleksandar Georgi**
**3)POUSSOU Stephane Bernard**
**4)HE Xiaoyi**
**5)MILCETICH Francis Anthony**

(57) Abstract :
A precombustor system (300) including an ignition chamber (301) having a front wall (308) a central axis a diameter D and an outlet (313) configured to discharge a product gas (315). The ignition chamber (301) includes a central ignition oxygen injector (307) configured to inject a first oxygen stream from the front wall (308) substantially parallel to the central axis and a tangential primary fuel injector (303) configured to inject a primary fuel stream tangential to the central axis at a location an axial distance X downstream of the front wall (308). The ratio X/D is from 0.25 to 4.0. The central axis forms an angle a with a vertical line of less than or equal to about 45 degrees. The trajectory of the primary fuel stream forms an angle  with a plane that is perpendicular to the central axis of less than or equal to about 20 degrees. A method for combustion is also disclosed.

No. of Pages : 59 No. of Claims : 15

(12) PATENT APPLICATION PUBLICATION
(21) Application No.4224/CHENP/2014 A
(19) INDIA
(22) Date of filing of Application :06/06/2014
(43) Publication Date : 17/07/2015

(54) Title of the invention : HOLLOW SPHERICAL ZEOLITE IM 5 AND PREPARATION METHOD THEREFOR

(51) International classification :C01B39/48,B01J29/70
(31) Priority Document No :201110353565.4
(32) Priority Date :10/11/2011
(33) Name of priority country :China
(86) International Application No :PCT/CN2012/001474
Filing Date :30/10/2012
(87) International Publication No :WO 2013/067765
(61) Patent of Addition to Application Number :NA
Filing Date :NA
(62) Divisional to Application Number :NA
Filing Date :NA

(71)**Name of Applicant :**
**1)CHINA PETROLEUM & CHEMICAL CORPORATION**
Address of Applicant :22 Chaoyangmen North StreetChaoyang District Beijing 100728 China
**2)FUSHUN RESEARCH INSTITUTE OF PETROLEUM AND PETROCHEMICALS SINOPEC**
(72)**Name of Inventor :**
**1)LING Fengxiang**
**2)YANG Weiya**
**3)WANG Shaojun**
**4)SHEN Zhiqi**

(57) Abstract :
Provided are hollow spherical zeolite IM 5 and a preparation method therefor. A cation quaternary ammonium salt surfactant having a long carbon chain is added to an zeolite IM 5 preparation system where the molar ratio of a template agent/the surfactant is between approximately 0.3 and approximately 4.5 and hollow spherical zeolite IM 5 is generated via the micelle effect of the surfactant. The structure facilitates material mass transfer of a reaction process.

No. of Pages : 13 No. of Claims : 11

(12) PATENT APPLICATION PUBLICATION
(21) Application No.4225/CHENP/2014 A
(19) INDIA
(22) Date of filing of Application :06/06/2014
(43) Publication Date : 17/07/2015

(54) Title of the invention : AUXILIARY POWER SOURCE DEVICE FOR VEHICLE

(51) International classification :B60L1/00
(31) Priority Document No :NA
(32) Priority Date :NA
(33) Name of priority country :NA
(86) International Application No :PCT/JP2011/077086
Filing Date :24/11/2011
(87) International Publication No :WO 2013/076852
(61) Patent of Addition to Application Number :NA
Filing Date :NA
(62) Divisional to Application Number :NA
Filing Date :NA

(71)**Name of Applicant :**
**1)Mitsubishi Electric Corporation**
Address of Applicant :7 3 Marunouchi 2 chome Chiyoda ku Tokyo 1008310 Japan
(72)**Name of Inventor :**
**1)HARADA Ryotaro**
**2)TANAKA Takeshi**

(57) Abstract :
An auxiliary power source device for a vehicle comprising a three phase inverter for converting an input direct current voltage to a three phase alternating current voltage and applying the three phase alternating current voltage to a load the auxiliary power source device being mounted to an electric vehicle wherein there are provided: a filter reactor (5) connected to output terminals of the three phase inverter (3); a filter capacitor (6) wired in a Y configuration at the load side end of the filter reactor (5) the neutral point of the filter capacitor not being grounded; and a three phase transformer (7) wired in a Y configuration at the load end side of the filter reactor (5) the neutral point of the three phase transformer being grounded and the three phase transformer being equipped with secondary coils (7b1 7b3) wired in a  configuration and primary coils (7a1 7a3).

No. of Pages : 19 No. of Claims : 4

(12) PATENT APPLICATION PUBLICATION
(19) INDIA
(22) Date of filing of Application :06/06/2014
(21) Application No.4232/CHENP/2014 A
(43) Publication Date : 17/07/2015

(54) Title of the invention : VIRTUALIZED WIRELESS NETWORK

(51) International classification :H04W4/00
(31) Priority Document No :61/556715
(32) Priority Date :07/11/2011
(33) Name of priority country :U.S.A.
(86) International Application No :PCT/US2012/063720
Filing Date :06/11/2012
(87) International Publication No :WO 2013/070613
(61) Patent of Addition to Application Number :NA
Filing Date :NA
(62) Divisional to Application Number :NA
Filing Date :NA

(71)**Name of Applicant :**
**1)DALI SYSTEMS CO. LTD.**
Address of Applicant :Maples Corporate Services Limited P. O. Box 309 Ugland House South Church Street Georgetown Grand Cayman KY1 1104 Cayman Island
**2)DALI WIRELESS INC.**
(72)**Name of Inventor :**
**1)STAPLETON Shawn Patrick**
**2)LEMSON Paul**
**3)SPEDALIERE Gary**
**4)LEE Albert S.**

(57) Abstract :
According to an embodiment of the present invention a network is provided. The network may include a first base transceiver station (BTS). The first BTS may be operable to provide a first signal including a plurality of first carriers. The network may also include a second BTS operable to provide a second signal including a plurality of second carriers. The network may also include a set of one or more digital access units (DAUs) each of the one or more DAUs being coupled to at least one of the first BTS or the second BTS. A set of one or more digital remote units (DRUs) may be included in the network each of the DRUs being coupled to one of the one or more DAUs and operable to broadcast the first signal or the second signal.

No. of Pages : 39 No. of Claims : 22

(12) PATENT APPLICATION PUBLICATION
(21) Application No.4233/CHENP/2014 A
(19) INDIA
(22) Date of filing of Application :06/06/2014
(43) Publication Date : 17/07/2015

(54) Title of the invention : PATIENT INTERFACE WITH VARIABLE APPLANATION

(51) International classification :A61F9/009
(31) Priority Document No :13/336324
(32) Priority Date :23/12/2011
(33) Name of priority country :U.S.A.
(86) International Application No :PCT/US2012/070781
Filing Date :20/12/2012
(87) International Publication No :WO 2013/096539
(61) Patent of Addition to Application Number :NA
Filing Date :NA
(62) Divisional to Application Number :NA
Filing Date :NA

(71)**Name of Applicant :**
**1)ALCON LENSX INC.**
Address of Applicant :33 Journey Suite 175 Aliso Viejo California 92656 U.S.A.
(72)**Name of Inventor :**
**1)RAKSI Ferenc**
**2)GOLDSHLEGER Ilya**

(57) Abstract :
A variable applanation patient interface can include a lens support system attachable to a distal end of an ophthalmic surgical laser system; a contact lens supported by the lens support system and configured to make contact with an eye surface; and an adjustable coupler coupled to at least one of the lens support system and the contact lens and configured to be coupled to a non central region of the eye surface to accommodate the contact lens to contact a central region of the eye surface with a central applanation to enable a change between the central applanation and an extended applanation and to accommodate the contact lens to contact an extended region of the eye surface larger than the central region with the extended applanation.

No. of Pages : 38 No. of Claims : 21

(12) PATENT APPLICATION PUBLICATION
(21) Application No.4234/CHENP/2014 A
(19) INDIA
(22) Date of filing of Application :06/06/2014
(43) Publication Date : 17/07/2015

(54) Title of the invention : IMAGE PROCESSOR FOR INTRA SURGICAL OPTICAL COHERENCE TOMOGRAPHIC IMAGING OF LASER CATARACT PROCEDURES

(51) International classification :A61F9/008
(31) Priority Document No :13/329813
(32) Priority Date :19/12/2011
(33) Name of priority country :U.S.A.
(86) International Application No :PCT/US2012/070435
Filing Date :19/12/2012
(87) International Publication No :WO 2013/096348
(61) Patent of Addition to Application Number :NA
Filing Date :NA
(62) Divisional to Application Number :NA
Filing Date :NA

(71)**Name of Applicant :**
**1)ALCON LENSX INC.**
Address of Applicant :33 Journey Suite 175 Aliso Viejo California 92656 U.S.A.
(72)**Name of Inventor :**
**1)GOLDSHLEGER Ilya**
**2)HOLLAND Guy**
**3)JUHASZ Adam**
**4)KURTZ Ronald M.**
**5)VARDIN Kostadin**

(57) Abstract :
A cataract surgical system includes a laser source to generate a first set of laser pulses; a guiding optic to guide the first set of laser pulses to a cataract target region in an eye; a laser controller to generate an electronic representation of a target scan pattern and to control the guiding optic to scan the first set of laser pulses according to a portion of the target scan pattern to create a first photo disrupted region in the cataract target region; and a Spectral Domain Optical Coherence Tomographic (SD OCT) imaging system to generate an image of a portion of the first photo disrupted region. The laser controller can generate an electronic representation of a modified scan pattern in relation to the image generated by the SD OCT imaging system and control the guiding optic to scan a second set of laser pulses according the modified scan pattern.

No. of Pages : 62 No. of Claims : 26

(12) PATENT APPLICATION PUBLICATION
(19) INDIA
(22) Date of filing of Application :06/06/2014
(21) Application No.4235/CHENP/2014 A
(43) Publication Date : 17/07/2015

(54) Title of the invention : MULTI LAYERED PIPE

(51) International classification :B32B1/08,B32B27/32,F16L9/12
(31) Priority Document No :EP11192229
(32) Priority Date :06/12/2011
(33) Name of priority country :EPO
(86) International Application No :PCT/EP2012/004962
Filing Date :30/11/2012
(87) International Publication No:WO 2013/083255
(61) Patent of Addition to Application Number :NA
Filing Date :NA
(62) Divisional to Application Number :NA
Filing Date :NA

(71)**Name of Applicant :**
**1)WAVIN B.V.**
Address of Applicant :Stationsplein 3 NL 80 11 CW Zwolle Netherlands
(72)**Name of Inventor :**
**1)AKKERMAN Johannes**
**2)KANTERS Arnoldus Franciscius Cornelis**

(57) Abstract :
A multi layered pipe comprising an inner layer and a middle layer located radially outside the inner layer and an outer layer located radially outside the middle layer wherein the inner layer and outer layer comprises a polyolefin and the middle layer comprises a polyolefin filled with an additive and the concentration of the additive in the middle layer is less than 10 wt% with respect to the weight of the middle layer and wherein the layer thickness of the middle layer is such that the pipe has a thermal expansion coefficient of 5x10 (°C) or lower.

No. of Pages : 11 No. of Claims : 15

(12) PATENT APPLICATION PUBLICATION
(19) INDIA
(22) Date of filing of Application :06/06/2014
(21) Application No.4236/CHENP/2014 A
(43) Publication Date : 17/07/2015

(54) Title of the invention : MEDICAMENT DELIVERY DEVICE

| | |
|---|---|
| (51) International classification | :A61M5/315,A61M5/20,A61M5/24 |
| (31) Priority Document No | :11511219 |
| (32) Priority Date | :25/11/2011 |
| (33) Name of priority country | :Sweden |
| (86) International Application No | :PCT/SE2012/051283 |
| Filing Date | :21/11/2012 |
| (87) International Publication No | :WO 2013/077800 |
| (61) Patent of Addition to Application Number | :NA |
| Filing Date | :NA |
| (62) Divisional to Application Number | :NA |
| Filing Date | :NA |

(71)**Name of Applicant :**
**1)SHL GROUP AB**
Address of Applicant :IP Department Box 1240 Augustendalsvgen 19 S 131 28 Nacka Strand Sweden
(72)**Name of Inventor :**
**1)OLSON Stephan**

(57) Abstract :
The present invention relates to an Injection device comprising a housing (2 3 4 5) a container holder (10) said container holder (10) being configured for accommodating a medicament container (12) having a needle (13) attached to one end thereof and a stopper sealingly and slidable arranged inside said medicament container (12) at the other end thereof a drive unit comprising a plunger rod (60) and plunger drive means (50 70) said drive unit further comprising a first energy accumulating member (40) wherein said plunger drive means (50 70) is operationally associated with said first energy accumulating member (40) and an injection indication mechanism (182 204 212) wherein the injection indication mechanism (182 204 212) comprises a tactile signalling element (204 212) and a drive mechanism (182) for driving said tactile signalling member said drive mechanism (182) being coupled to said plunger drive means (50 70).

No. of Pages : 41 No. of Claims : 13

(12) PATENT APPLICATION PUBLICATION
(19) INDIA
(22) Date of filing of Application :10/01/2014
(21) Application No.133/CHE/2014 A
(43) Publication Date : 17/07/2015

(54) Title of the invention : A OVERRUN CONTROL DEVICE IN A HYBRID VEHICLE

(51) International classification :F02D
(31) Priority Document No :NA
(32) Priority Date :NA
(33) Name of priority country :NA
(86) International Application No :NA
Filing Date :NA
(87) International Publication No : NA
(61) Patent of Addition to Application Number :NA
Filing Date :NA
(62) Divisional to Application Number :NA
Filing Date :NA

(71)**Name of Applicant :**
**1)Robert Bosch Engineering and Business Solutions Limited**
Address of Applicant :123, Industrial Layout, Hosur Road, Koramangala, Bangalore 560095, Karnataka, INDIA Karnataka India
**2)Robert Bosch GmbH**
(72)**Name of Inventor :**
**1)DATTA Santosh**

(57) Abstract :
The current invention relates to an overrun control device in a hybrid vehicle to operate an engine of the vehicle during overrun condition of the vehicle. The hybrid vehicle comprises a first clutch coupling an engine of the vehicle to a motor operated by battery of the vehicle and a second clutch coupling the motor to a transmission of the vehicle. The overrun control device of the current invention is characterized in that a prediction means determines start of the overrun condition and predicts duration of the overrun condition at the start of the overrun condition. A comparator compares the predicted duration of the overrun condition with duration required to execute at least one pre-determined test in the overrun condition. A switching means of the overrun control device selectively operates first clutch or second clutch in the overrun condition, depending on the comparison by the comparator. Reference figure: Figure 1

No. of Pages : 17 No. of Claims : 12

(12) PATENT APPLICATION PUBLICATION
(19) INDIA
(22) Date of filing of Application :06/06/2014
(21) Application No.4240/CHENP/2014 A
(43) Publication Date : 17/07/2015

(54) Title of the invention : APPARATUS AND METHODS FOR EFFICIENT NETWORK ADDRESS TRANSLATION AND APPLICATION LEVEL GATEWAY PROCESSING

(51) International classification :H04L29/12
(31) Priority Document No :13/330529
(32) Priority Date :19/12/2011
(33) Name of priority country :U.S.A.
(86) International Application No :PCT/US2012/070720
Filing Date :19/12/2012
(87) International Publication No :WO 2013/096504
(61) Patent of Addition to Application Number :NA
Filing Date :NA
(62) Divisional to Application Number :NA
Filing Date :NA

(71)**Name of Applicant :**
**1)QUALCOMM INCORPORATED**
Address of Applicant :Attn: International IP Administration 5775 Morehouse Drive San Diego California 92121 U.S.A.
(72)**Name of Inventor :**
**1)VANGALA Venkata Satish Kumar**
**2)MITRA Alok**
**3)TRIPATHI Rohit**

(57) Abstract :
Apparatus and methods for efficient NAT and ALG processing is disclosed. An exemplary method includes the operations of deep scanning a packet received over a connection to determine an application level gateway (ALG) process to be performed on the packet associating the connection with the ALG process and forwarding additional packets received over the connection to receive the ALG process based on said associating so that deep scanning of the additional packets is bypassed. An exemplary apparatus includes a processor to deep scan a packet received over a connection to determine an ALG process to be performed on the packet a database to associate the connection with the ALG process and a packet transmitter to forward additional packets received over the connection to receive the ALG process based on said associating so that deep scanning of the additional packets is bypassed.

No. of Pages : 39 No. of Claims : 44

(12) PATENT APPLICATION PUBLICATION
(19) INDIA
(22) Date of filing of Application :06/06/2014
(21) Application No.4241/CHENP/2014 A
(43) Publication Date : 17/07/2015

(54) Title of the invention : METHODS AND APPARATUS FOR IMPROVING NFC LLCP PARTITIONING

(51) International classification :H04W4/00
(31) Priority Document No :61/580621
(32) Priority Date :27/12/2011
(33) Name of priority country :U.S.A.
(86) International Application No :PCT/US2012/070714
Filing Date :19/12/2012
(87) International Publication No :WO 2013/101608
(61) Patent of Addition to Application Number :NA
Filing Date :NA
(62) Divisional to Application Number :NA
Filing Date :NA

(71)**Name of Applicant :**
**1)QUALCOMM INCORPORATED**
Address of Applicant :Attn: International IP Administration 5775 Morehouse Drive San Diego California 92121 U.S.A.
(72)**Name of Inventor :**
**1)GILLESPIE Alan**
**2)HILLAN John**
**3)ODONOGHUE Jeremy R.**
**4)CHINGALANDE Dubai**

(57) Abstract :
Aspects disclosed herein relate to partitioning LLCP responsibilities between the NFCC and DH. In an example with a NFC device a DH maybe configured to establish a LLCP link with a remote NFC endpoint through a NFCC and partition LLCP related responsibilities between the DH and the NFCC when the NFCC is operable for LLCP split communications. Further the NFCC may be operable to receive a PDU from a remote NFC endpoint determine whether the received PDU is a SYMM PDU or a link deactivation PDU and communicate the received PDU to a DH upon a determination that the received PDU is not a SYMM PDU or a link deactivation PDU.

No. of Pages : 64 No. of Claims : 48

(12) PATENT APPLICATION PUBLICATION
(19) INDIA
(22) Date of filing of Application :06/06/2014
(21) Application No.4242/CHENP/2014 A
(43) Publication Date : 17/07/2015

(54) Title of the invention : SUPPORT FOR VOICE OVER FLEXIBLE BANDWIDTH CARRIER

(51) International classification :H04J13/16
(31) Priority Document No :61/568742
(32) Priority Date :09/12/2011
(33) Name of priority country :U.S.A.
(86) International Application No :PCT/US2012/068548
Filing Date :07/12/2012
(87) International Publication No :WO 2013/086398
(61) Patent of Addition to Application Number :NA
Filing Date :NA
(62) Divisional to Application Number :NA
Filing Date :NA

(71)**Name of Applicant :**
**1)QUALCOMM INCORPORATED**
Address of Applicant :Attn: International IP Administration 5775 Morehouse Drive San Diego California 92121 1714 U.S.A.
(72)**Name of Inventor :**
**1)DAS Soumya**
**2)QUICK Roy Franklin Jr.**

(57) Abstract :
Methods systems and devices are disclosed for providing data such as voice data for a voice service over flexible bandwidth carriers. Some embodiments include support for 12.2 kbps and/or 7.95 kbps AMR CS voice over flexible bandwidth UMTS (F UMTS) in particular. Some embodiments provide for keeping the information data rate for a flexible bandwidth carrier at least the same as that of a normal bandwidth carrier. For example one voice frame may still be mapped to a 20 ms time window upon transmission irrespective of a flexible bandwidth scaling factor N or chip rate divider Dcr in F UMTS. The tools and techniques provided may be implemented on mobile devices and/or base stations. Flexible bandwidths carriers may utilize portions of spectrum that may be too big or too small to fit a normal bandwidth waveform for a normal bandwidth carrier.

No. of Pages : 86 No. of Claims : 44

(12) PATENT APPLICATION PUBLICATION
(21) Application No.4129/CHENP/2014 A
(19) INDIA
(22) Date of filing of Application :03/06/2014
(43) Publication Date : 17/07/2015

(54) Title of the invention : STATOR CORE MANUFACTURING METHOD AND STATOR CORE

(51) International classification :H02K15/12,H02K1/14,H02K3/34
(31) Priority Document No :2011242154
(32) Priority Date :04/11/2011
(33) Name of priority country :Japan
(86) International Application No :PCT/JP2012/060740
Filing Date :20/04/2012
(87) International Publication No :WO 2013/065342
(61) Patent of Addition to Application Number :NA
Filing Date :NA
(62) Divisional to Application Number :NA
Filing Date :NA

(71)**Name of Applicant :**
**1)MITSUBISHI ELECTRIC CORPORATION**
Address of Applicant :7 3 Marunouchi 2 chome Chiyoda ku Tokyo 1008310 Japan
(72)**Name of Inventor :**
**1)HIROTA Yutaka**
**2)WAKITA Satoshi**
**3)BOKU Kazuhiko**
**4)HASHIMOTO Akira**
**5)UGAI Yoshikazu**

(57) Abstract :
In order to prevent unwanted burr formation on an insulating resin that is provided between a stator winding and a main core block body the present invention provides a stator core manufacturing method for manufacturing a stator core that is constructed by connecting into a circular shape multiple core blocks (11) each being constructed by laminating multiple core pieces (20) together in the axial direction wherein each core block (11) is equipped with a main core block body (12) that has a yoke section (13) and a magnetic pole tooth section (15) and an insulating resin layer (18) that is provided between a stator winding (25) and the main core block body (12) so as to cover a section that includes the surface of the magnetic pole tooth section (15) around which the stator winding (25) is wound. The stator core manufacturing method includes an injection molding step in which the insulating resin layer (18) is integrally formed with the main core block body (12) for each main core block body (12) by means of injection molding.

No. of Pages : 44 No. of Claims : 8

(12) PATENT APPLICATION PUBLICATION
(19) INDIA
(22) Date of filing of Application :06/06/2014
(21) Application No.4244/CHENP/2014 A
(43) Publication Date : 17/07/2015

(54) Title of the invention : LI2S@C COATED LITHIUM METAL PRODUCT METHOD FOR THE PRODUCTION THEREOF AND USE

(51) International classification :H01M4/134,H01M4/36,H01M4/38
(31) Priority Document No :10 2011 086 035.5
(32) Priority Date :09/11/2011
(33) Name of priority country :Germany
(86) International Application No :PCT/EP2012/072234
Filing Date :09/11/2012
(87) International Publication No :WO 2013/068523
(61) Patent of Addition to Application Number :NA
Filing Date :NA
(62) Divisional to Application Number :NA
Filing Date :NA

(71)**Name of Applicant :**
**1)ROCKWOOD LITHIUM GMBH**
Address of Applicant :Industriepark Hchst Gebude G 879 65926 Frankfurt/M Germany
(72)**Name of Inventor :**
**1)WIETELMANN Ulrich**
**2)EMMEL Ute**
**3)HARTNIG Christoph**
**4)LANG Sebastian**

(57) Abstract :
The invention relates to a particulate lithium metal/lithium sulfide composite material to a method for producing a LiS@C coated lithium metal product and to the use of said lithium metal product. The particulate lithium metal/lithium sulfide composite material has a core shell morphology the shell of which is made of a lithium sulfide containing C and the core of which is made of metal lithium. According to the method the particulate lithium metal/lithium sulfide composite material is produced by reacting melted drop shaped lithium metal in a hydrocarbon solvent with a sulfur source selected from the group CS S HS COS SO SO or mixtures thereof. The method products according to the invention are used to produce lithium battery electrodes.

No. of Pages : 21 No. of Claims : 15

(12) PATENT APPLICATION PUBLICATION
(19) INDIA
(22) Date of filing of Application :06/06/2014
(21) Application No.4245/CHENP/2014 A
(43) Publication Date : 17/07/2015

(54) Title of the invention : SYSTEMS AND METHODS FOR TRANSMITTING AND RECEIVING DISCOVERY AND PAGING MESSAGES

(51) International classification :H04L29/08,H04W68/00,H04W8/00
(31) Priority Document No :61/570704
(32) Priority Date :14/12/2011
(33) Name of priority country :U.S.A.
(86) International Application No :PCT/US2012/069801
Filing Date :14/12/2012
(87) International Publication No :WO 2013/090753
(61) Patent of Addition to Application Number :NA
Filing Date :NA
(62) Divisional to Application Number :NA
Filing Date :NA

(71)**Name of Applicant :**
**1)QUALCOMM INCORPORATED**
Address of Applicant :Attn: International IP Administration 5775 Morehouse Drive San Diego California 92121 1714 U.S.A.
(72)**Name of Inventor :**
**1)SAMPATH Hemanth**
**2)ABRAHAM Santosh Paul**
**3)MERLIN Simone**
**4)TAVILDAR Saurabh**
**5)LI Junyi**
**6)KHUDE Nilesh N.**

(57) Abstract :
Methods devices and computer program products for transmitting and receiving discovery and paging messages are described herein. In one aspect an apparatus operable in a wireless communication system includes a receiver and transmitter. The receiver receives a registration packet from a first device. The registration packet indicates interest in a service provided by another device in a wireless communications network. The receiver further receives a discovery packet from a second device during a first discovery interval of a plurality of discovery intervals. The discovery packet advertises a service provided by the second device and the plurality of discovery intervals include recurring time intervals when a plurality of devices are configured to transmit and receive discovery packets in the wireless communications network. The transmitter transmits a notification packet configured to enable the first device and the second device to communicate directly.

No. of Pages : 54 No. of Claims : 18

(12) PATENT APPLICATION PUBLICATION
(19) INDIA
(22) Date of filing of Application :06/06/2014
(21) Application No.4246/CHENP/2014 A
(43) Publication Date : 17/07/2015

(54) Title of the invention : PROVIDING FOR MOBILITY FOR FLEXIBLE BANDWIDTH CARRIER SYSTEMS

(51) International classification :H04W8/22
(31) Priority Document No :61/568742
(32) Priority Date :09/12/2011
(33) Name of priority country :U.S.A.
(86) International Application No :PCT/US2012/068523
Filing Date :07/12/2012
(87) International Publication No :WO 2013/086378
(61) Patent of Addition to Application Number :NA
Filing Date :NA
(62) Divisional to Application Number :NA
Filing Date :NA

(71)**Name of Applicant :**
**1)QUALCOMM INCORPORATED**
Address of Applicant :Attn: International IP Administration 5775 Morehouse Drive San Diego California 92121 1714 U.S.A.
(72)**Name of Inventor :**
**1)DAS Soumya**
**2)AWONIYI Olufunmilola O.**
**3)PARK Edwin C.**
**4)QUICK Roy Franklin Jr.**
**5)SAMBHWANI Sharad Deepak**

(57) Abstract :
Methods systems and devices for facilitating mobility between flexible bandwidth systems and other bandwidth systems are provided. These tools and techniques that provide mobility between different bandwidth systems may facilitate supporting circuit switched (CS) services such as CS voice services. Some embodiments provide for determining flexible bandwidth capable devices such as user equipment. Some embodiments involve core network redirection where a core network may direct the handling of circuit switched services when a flexible bandwidth system does not support the CS services. Some examples provide for radio access network determined handling of CS services when a flexible bandwidth system may not support the CS services. Some embodiments provide for transitioning to a flexible bandwidth system. Some embodiments provide for transitioning from flexible bandwidth systems to non flexible bandwidth systems that have no support for some or all CS services other flexible bandwidth systems and/or systems that natively support CS voice services.

No. of Pages : 208 No. of Claims : 40

(12) PATENT APPLICATION PUBLICATION
(19) INDIA
(22) Date of filing of Application :03/06/2014
(21) Application No.4130/CHENP/2014 A
(43) Publication Date : 17/07/2015

(54) Title of the invention : APPARATUS FOR THE TREATMENT OF AIR

(51) International classification :A62B19/02,A62D9/00,B01D53/62
(31) Priority Document No :1119171.5
(32) Priority Date :07/11/2011
(33) Name of priority country :U.K.
(86) International Application No :PCT/GB2012/052764
Filing Date :06/11/2012
(87) International Publication No :WO 2013/068737
(61) Patent of Addition to Application Number :NA
Filing Date :NA
(62) Divisional to Application Number :NA
Filing Date :NA

(71)**Name of Applicant :**
**1)JOHNSON MATTHEY PUBLIC LIMITED COMPANY**
Address of Applicant :5th floor 25 Farringdon Street London Greater London EC4A 4AB U.K.
(72)**Name of Inventor :**
**1)POULSTON Stephen**
**2)SMITH Andrew William John**
**3)BENNETT Stephen Charles**
**4)ROWSELL Elizabeth**

(57) Abstract :
A gas treatment apparatus suitable for use in an air purifying apparatus for the production of breathable air comprises a catalyst comprising palladium and iron oxide and a source of a volatile nitrogen containing compound. The apparatus is useful in gas masks emergency escape hoods and static air treatment apparatus.

No. of Pages : 20 No. of Claims : 18

(12) PATENT APPLICATION PUBLICATION
(21) Application No.4131/CHENP/2014 A
(19) INDIA
(22) Date of filing of Application :03/06/2014
(43) Publication Date : 17/07/2015

(54) Title of the invention : NEW PROTEASES ABLE TO HYDROLYZE GLUTEN PEPTIDES AND PROTEINS AT ACIDIC PH FROM THE ACTINOMYCETE ACTINOALLOMURUS

(51) International classification :A61K38/48,C12N9/52,C12N1/20
(31) Priority Document No :11425291.9
(32) Priority Date :06/12/2011
(33) Name of priority country :EPO
(86) International Application No :PCT/EP2012/071816
Filing Date :05/11/2012
(87) International Publication No :WO 2013/083338
(61) Patent of Addition to Application Number :NA
Filing Date :NA
(62) Divisional to Application Number :NA
Filing Date :NA

(71)**Name of Applicant :**
**1)FONDAZIONE ISTITUTO INSUBRICO DI RICERCA PER LA VITA**
Address of Applicant :Via Roberto Lepetit 34 I 21040 Gerenzano (VA) Italy
(72)**Name of Inventor :**
**1)CAVALETTI Linda**
**2)CARRANO Lucia**
**3)ABBONDI Monica**
**4)BRUNATI Mara**
**5)TARAVELLA Anna**

(57) Abstract :
The invention relates to a new family of proteolytic enxymes having the ability to hydrolize at a p H between 3 and 8 gluten olygopeptides which are resistant to cleavage by gastric and pancreatic enzymes and whose presence in the intestinal lumen results in toxic effects. The enzymes have been identified as endopeptidases of the S8/S53 family and are produced by an Actinoallomurus strain. The object of the invention includes also methods for producing enzymes composition comprising the endopeptidases by cultivation of native Actinoallomurus strains mutants thereof or recombinant host cells comprising nucleic acids codifying for the endopeptidases. Said nucleic acids constitute a further object of the invention. The enzyme compositions comprising at least one endopeptidase of the invention are useful for the treatment and/or prevention of celiac sprue dermatitis herpetiformis and any other disorder associated with gluten intolerance as ingredients of pharmaceutical formulations or as additives of foods and drinks.

No. of Pages : 74 No. of Claims : 29

(12) PATENT APPLICATION PUBLICATION
(21) Application No.4132/CHENP/2014 A
(19) INDIA
(22) Date of filing of Application :03/06/2014
(43) Publication Date : 17/07/2015

(54) Title of the invention : METHOD FOR PRODUCING 4 HYDROXYMETHYL 2 3 5 6 TETRAFLUOROTOLUENE

| | |
|---|---|
| (51) International classification | :C07C29/58,C07C33/46,C07B61/00 |
| (31) Priority Document No | :2011246239 |
| (32) Priority Date | :10/11/2011 |
| (33) Name of priority country | :Japan |
| (86) International Application No | :PCT/JP2012/079581 |
| Filing Date | :08/11/2012 |
| (87) International Publication No | :WO 2013/069810 |
| (61) Patent of Addition to Application Number | :NA |
| Filing Date | :NA |
| (62) Divisional to Application Number | :NA |
| Filing Date | :NA |

(71)**Name of Applicant :**
**1)SUMITOMO CHEMICAL COMPANY LIMITED**
Address of Applicant :27 1 Shinkawa 2 chome Chuo ku Tokyo 1048260 Japan
(72)**Name of Inventor :**
**1)MIURA Masaya**
**2)KITAURA Takenori**

(57) Abstract :
A method for producing 4 hydroxymethyl 2 3 5 6 tetrafluorotoluene by bringing 4 hydroxymethyl 2 3 5 6 tetrafluorobenzyl halide into contact with hydrogen in the presence of a C1 3 alcohol solvent and palladium carbon wherein the temperature of a mixture including the C1 3 alcohol solvent and palladium carbon is maintained at 15 C or lower until the start of contact between 4 hydroxymethyl 2 3 5 6 tetrafluorobenzyl halide and hydrogen.

No. of Pages : 19 No. of Claims : 6

(12) PATENT APPLICATION PUBLICATION
(21) Application No.4133/CHENP/2014 A
(19) INDIA
(22) Date of filing of Application :03/06/2014
(43) Publication Date : 17/07/2015

(54) Title of the invention : CHEWING GUM BASE CONTAINING SUBSTITUTED POLYSACCHARIDES AND CHEWING GUM PRODUCTS MADE THEREFROM

(51) International classification :A23G4/00
(31) Priority Document No :61/556546
(32) Priority Date :07/11/2011
(33) Name of priority country :U.S.A.
(86) International Application No :PCT/US2012/062043
Filing Date :26/10/2012
(87) International Publication No :WO 2013/070444
(61) Patent of Addition to Application Number :NA
Filing Date :NA
(62) Divisional to Application Number :NA
Filing Date :NA

(71)**Name of Applicant :**
**1)WM. WRIGLEY JR. COMPANY**
Address of Applicant :1132 Blackhawk Street Chicago IL 60642 U.S.A.
(72)**Name of Inventor :**
**1)MO Xiaoqun**
**2)LIU Jingping**
**3)LI Kaichang**

(57) Abstract :
A chewing gum base comprises food acceptable substituted polysaccharides wherein substituents on the saccharide units in the polysaccharides produce a degree of substitution of at least I.0. The polysaccharides may have branches with an average length of 1 to 15 saccharide units per branch. The polysaccharides may be linked saccharide units such as
allose altrose mannose gulose idose galactose 3 6 anhydro galactose glucuronic acid mannuronic acid galacturonic acid aldobiouronic acid fucose rhamnose arabinose xylose talose acyl substituted glucose fructose lactose and combinations thereof thereof.

No. of Pages : 40 No. of Claims : 28

(12) PATENT APPLICATION PUBLICATION
(19) INDIA
(22) Date of filing of Application :09/06/2014
(21) Application No.4254/CHENP/2014 A
(43) Publication Date : 17/07/2015

(54) Title of the invention : AUTOMATIC VALVE WITH INTERCHANGEABLE SEAT PLATE

(51) International classification :F04B39/10
(31) Priority Document No :FI2011A000268
(32) Priority Date :12/12/2011
(33) Name of priority country :Italy
(86) International Application No :PCT/EP2012/075060
Filing Date :11/12/2012
(87) International Publication No :WO 2013/087615
(61) Patent of Addition to Application Number :NA
Filing Date :NA
(62) Divisional to Application Number :NA
Filing Date :NA

(71)**Name of Applicant :**
**1)NUOVO PIGNONE S.P.A**
Address of Applicant :Via Felice Matteucci 2 I 50127 Florence Italy
(72)**Name of Inventor :**
**1)BABBINI Alberto**
**2)BAGAGLI Riccardo**
**3)TOGNARELLI Leonardo**
**4)PRATELLI Guido**

(57) Abstract :
The automatic valve comprises a valve seat (52) with first gas flow passages (58) extending there through and a valve guard (54) having second gas flow passages (66) extending there through. Sealing rings (60) are arranged between the valve guard and the valve seat. A removable seat plate (68) is removably connected to the valve seat (52) and is provided with apertures (70) matching with the first gas flow passages (58) of the valve seat. The sealing rings are resiliently biased by resilient members (62) against the removable seat plate (68) to close the valve. The seat plate and the rings are made of non metallic material.

No. of Pages : 24 No. of Claims : 15

(12) PATENT APPLICATION PUBLICATION
(19) INDIA
(22) Date of filing of Application :05/06/2014
(21) Application No.2771/CHE/2014 A
(43) Publication Date : 17/07/2015

(54) Title of the invention : ARC WELDING APPARATUS, ARC WELDING SYSTEM, AND ARC WELDING METHOD

(51) International classification :B23K
(31) Priority Document No :JP2013-120736
(32) Priority Date :07/06/2013
(33) Name of priority country :Japan
(86) International Application No :NA
Filing Date :NA
(87) International Publication No : NA
(61) Patent of Addition to Application Number :NA
Filing Date :NA
(62) Divisional to Application Number :NA
Filing Date :NA

(71)**Name of Applicant :**
**1)Kabushiki Kaisha Yaskawa Denki**
Address of Applicant :2-1, Kurosaki-Shiroishi, Yahatanishi-ku, Kitakyushu-shi, Fukuoka 806-0004 Japan
(72)**Name of Inventor :**
**1)Masafumi MURAKAMI**
**2)Atsushi TERADA**

(57) Abstract :
An arc welding apparatus includes a difference calculating unit configured to calculate a difference voltage value by subtracting a welding voltage value from a target voltage value; a speed setting unit configured to set an advancing speed and a retreating speed of a welding consumable with respect to a workpiece to increase a ratio of a magnitude of the retreating speed to a magnitude of the advancing speed corresponding to an increase in the difference voltage value; and a driving unit configured to drive the welding consumable at the advancing speed and the retreating speed to generate a short circuit condition and an arc condition.

No. of Pages : 30 No. of Claims : 8

(12) PATENT APPLICATION PUBLICATION
(19) INDIA
(22) Date of filing of Application :09/06/2014
(21) Application No.4256/CHENP/2014 A
(43) Publication Date : 17/07/2015

(54) Title of the invention : FAULT DIAGNOSIS OF A LIFT SYSTEM AND THE COMPONENTS THEREOF BY MEANS OF A SENSOR

(51) International classification :B66B5/00
(31) Priority Document No :11193507.8
(32) Priority Date :14/12/2011
(33) Name of priority country :EPO
(86) International Application No :PCT/EP2012/074238
Filing Date :03/12/2012
(87) International Publication No :WO 2013/087439
(61) Patent of Addition to Application Number :NA
Filing Date :NA
(62) Divisional to Application Number :NA
Filing Date :NA

(71)**Name of Applicant :**
**1)INVENTIO AG**
Address of Applicant :Seestrasse 55 CH 6052 Hergiswil Switzerland
(72)**Name of Inventor :**
**1)STUDER Christian**
**2)KOCHER Hans**
**3)ANNEN Mirco**
**4)NEUENSCHWANDER Thomas**

(57) Abstract :
The invention relates to a lift system (10) having a sensor (8) by means of which vibrations generated when the lift system (10) is in operation can be detected and an evaluation circuit (9) which is connected to the sensor (8) and which is able to evaluate the vibrations detected by the sensor. The evaluation circuit (9) is able to compare the detected vibrations to a pre definable operating value and a pre definable threshold value. The invention also relates to a method for operating said lift system (10).

No. of Pages : 20 No. of Claims : 14

(12) PATENT APPLICATION PUBLICATION
(19) INDIA
(22) Date of filing of Application :09/06/2014
(21) Application No.4258/CHENP/2014 A
(43) Publication Date : 17/07/2015

(54) Title of the invention : FUNCTIONALIZED BLOCK COMPOSITE AND CRYSTALLINE BLOCK COMPOSITE COMPOSITIONS

(51) International classification :C08L51/06,C08L23/08,C08L23/14
(31) Priority Document No :61/570340
(32) Priority Date :14/12/2011
(33) Name of priority country :U.S.A.
(86) International Application No :PCT/US2012/069194
Filing Date :12/12/2012
(87) International Publication No :WO 2013/090396
(61) Patent of Addition to Application Number :NA
Filing Date :NA
(62) Divisional to Application Number :NA
Filing Date :NA

(71)**Name of Applicant :**
**1)DOW GLOBAL TECHNOLOGIES LLC**
Address of Applicant :2040 Dow Center Midland MI 48674 U.S.A.
(72)**Name of Inventor :**
**1)HU Yushan**
**2)WALTON Kim L.**
**3)MARCHAND Gary R.**
**4)READ Michael D.**
**5)SILVIS H. Craig**

(57) Abstract :
The invention provides functionalized block composites and crystalline block composites. In particular the invention provides a functionalized olefin based polymer formed from at least (A) and (B): (A) a crystalline block composite comprising: a block copolymer comprising a propylene based crystalline block and crystalline ethylene based block; a propylene based crystalline polymer; and a crystalline ethylene based polymer; and (B) at least one functionalization agent or a functionalized olefin based polymer formed from at least (A) and (B): (A) a crystalline block composite comprising: a block copolymer comprising a propylene based crystalline block and crystalline ethylene based block; a propylene based crystalline polymer; and a crystalline ethylene based polymer; and (B) at least one functionalization agent.

No. of Pages : 64 No. of Claims : 4

(12) PATENT APPLICATION PUBLICATION
(21) Application No.4259/CHENP/2014 A
(19) INDIA
(22) Date of filing of Application :09/06/2014
(43) Publication Date : 17/07/2015

(54) Title of the invention : DISTRIBUTED LOAD BALANCING IN A RADIO ACCESS NETWORK

(51) International classification :H04W28/08
(31) Priority Document No :11306485.1
(32) Priority Date :14/11/2011
(33) Name of priority country :EPO
(86) International Application No :PCT/EP2012/069909
Filing Date :09/10/2012
(87) International Publication No :WO 2013/072138
(61) Patent of Addition to Application Number :NA
Filing Date :NA
(62) Divisional to Application Number :NA
Filing Date :NA

(71)**Name of Applicant :**
**1)ALCATEL LUCENT**
Address of Applicant :3 avenue Octave Grard F 75007 Paris France
(72)**Name of Inventor :**
**1)HABERLAND Bernd**

(57) Abstract :
Embodiments relate to a baseband processing apparatus (200) for processing baseband signals to or from at least one remote radio head (204) the at least one remote radio head (204) serving a radio cell of a cellular communication system the baseband processing apparatus (200) comprising: an interface (208) to connect the baseband processing apparatus (200) as a first node (200 1) of a network (300) to a further baseband processing apparatus as a second node (200 2) of the network (300); a plurality of dedicated user data processors (210; 410; 420) wherein each is operable to process user specific data of first users being associated to the radio cell the processing of the user specific data of the first users leading to a processing load of the first node (200 1); and a load balancer (212) operable to exchange load information with a load balancer of the second node (200 2) via the interface (208) and to distribute processing tasks between the plurality of dedicated user data processors (210; 410; 420) of the first node (200 1) and/or to distribute processing tasks between plurality of dedicated user data processors (210; 410; 420) of the first node (200 1) and the second node (200 2) in response to the exchanged load information in order to distribute processing load among different nodes of the network (300).

No. of Pages : 36 No. of Claims : 16

(12) PATENT APPLICATION PUBLICATION
(21) Application No.4227/CHENP/2014 A
(19) INDIA
(22) Date of filing of Application :06/06/2014
(43) Publication Date : 17/07/2015

(54) Title of the invention : CONNECTION LEASING FOR HOSTED SERVICES

(51) International classification :G06F9/46,H04L29/06
(31) Priority Document No :13/398008
(32) Priority Date :16/02/2012
(33) Name of priority country :U.S.A.
(86) International Application No :PCT/US2013/025817
Filing Date :13/02/2013
(87) International Publication No :WO 2013/122977
(61) Patent of Addition to Application Number :NA
Filing Date :NA
(62) Divisional to Application Number :NA
Filing Date :NA

(71)**Name of Applicant :**
**1)CITRIX SYSTEMS INC.**
Address of Applicant :851 West Cypress Creek Rd. Fort Lauderdale Florida 33309 U.S.A.
(72)**Name of Inventor :**
**1)BELL Kenneth Malcolm**

(57) Abstract :
Aspects herein describe brokering hosted resources in a virtual desktop infrastructure (VDI) using connection leases to reduce demand on connection brokers and to allow hosted services to be maintained even in the event of a broker outage. When a client device desires to connect to a hosted resource (e.g. a hosted desktop or a hosted application) the client device may present a lease token to the session host. The lease token is a self sustaining package of data from which a session host can determine whether the requesting client device is authorized to access one or more resources hosted by that session host. The lease token may be cryptographically signed to ensure its contents have not been altered and further that the lease token originated from a trusted source. Lease tokens may be stored independently from a connection broker thereby still being usable if the connection broker goes offline.

No. of Pages : 39 No. of Claims : 20

(12) PATENT APPLICATION PUBLICATION
(19) INDIA
(22) Date of filing of Application :06/06/2014
(21) Application No.4228/CHENP/2014 A
(43) Publication Date : 17/07/2015

(54) Title of the invention : VARIABLE DEPTH COMPRESSION

(51) International classification :H04N7/24,G09G5/00
(31) Priority Document No :NA
(32) Priority Date :NA
(33) Name of priority country :NA
(86) International Application No :PCT/US2011/067902
Filing Date :29/12/2011
(87) International Publication No :WO 2013/101095
(61) Patent of Addition to Application Number :NA
Filing Date :NA
(62) Divisional to Application Number :NA
Filing Date :NA

(71)**Name of Applicant :**
**1)INTEL CORPORATION**
Address of Applicant :2200 Mission College Boulevard Santa Clara California 75052 U.S.A.
(72)**Name of Inventor :**
**1)AKENINE MOLLER Tomas G.**
**2)NILSSON Jim K.**
**3)ANDERSSON Magnus**
**4)HASSELGREN Jon N.**

(57) Abstract :
In accordance with some embodiments the number of bits allocated to depth compression may be changed variably based on a number of considerations. As a result depth data may be compressed in a more efficient way.

No. of Pages : 20 No. of Claims : 30

(12) PATENT APPLICATION PUBLICATION
(19) INDIA
(22) Date of filing of Application :06/06/2014
(21) Application No.4229/CHENP/2014 A
(43) Publication Date : 17/07/2015

(54) Title of the invention : THERMO MAGNETIC RELEASE MECHANISM FOR CIRCUIT BREAKERS

(51) International classification :H01H71/14,H01H71/40
(31) Priority Document No :11460056.2
(32) Priority Date :21/11/2011
(33) Name of priority country :EPO
(86) International Application No :PCT/EP2012/004238
Filing Date :10/10/2012
(87) International Publication No :WO 2013/075770
(61) Patent of Addition to Application Number :NA
Filing Date :NA
(62) Divisional to Application Number :NA
Filing Date :NA

(71)**Name of Applicant :**
**1)ABB Technology AG**
Address of Applicant :Affolternstrasse 44 CH 8050 Zurich Switzerland
(72)**Name of Inventor :**
**1)RUSZCZYK Adam**
**2)MROZEK Adrian**

(57) Abstract :
The invention relates to a thermo magnetic release mechanism for a circuit breaker protecting electric circuits in electric transmission networks and in particular for a circuit breaker protecting the electric circuit of an electric energy receiver or receivers against short circuits or overloads. The thermo magnetic release mechanism (4 4 ) for an electric power circuit breaker (2) comprises an electric circuit and a magnetic circuit both connected mechanically and electrically with a drive element (5) of the circuit breaker. The magnetic circuit comprises a permanent magnet (8) and elements of a magnetically soft material connected to its poles which elements are the yokes of the circuit (9a 9b) or (9a 9b ) between which the armature of the magnetic circuit is located. The invention is characterized in that the armature is an electromagnet (10) made of two separable cores one immovable (10a) and one movable (10b) or (10b ) individually connected with the respective pair of yokes (9a 9b) or (9a 9b ) and contacting each other frontally in the closed state of the release mechanism (4 4 ) and it is made of a ferromagnetic material which when heated above the Curie (Tc) temperature changes its ferromagnetic characteristics to paramagnetic characteristics and the coils (11a lib) of the electromagnet (10) are wound on separable elements of the core (10a 10b or 10b ) in directions opposite to one another with respect to both separable elements.

No. of Pages : 18 No. of Claims : 9

(12) PATENT APPLICATION PUBLICATION
(19) INDIA
(22) Date of filing of Application :05/06/2014
(21) Application No.4190/CHENP/2014 A
(43) Publication Date : 17/07/2015

(54) Title of the invention : BEVERAGE BOTTLE WITH A RE SEALABLE CLOSURE HAVING A CAP AND A COLLAR

(51) International classification :B65D45/32,B65D41/10
(31) Priority Document No :11188427.6
(32) Priority Date :09/11/2011
(33) Name of priority country :EPO
(86) International Application No :PCT/EP2012/072122
Filing Date :08/11/2012
(87) International Publication No :WO 2013/068454
(61) Patent of Addition to Application Number :NA
Filing Date :NA
(62) Divisional to Application Number :NA
Filing Date :NA

(71)**Name of Applicant :**
**1)CARLSBERG BREWERIES A/S**
Address of Applicant :Ny Carlsberg Vej 100 DK 1799 Copenhagen V Denmark
(72)**Name of Inventor :**
**1)LACY Graham Keith**
**2)BYGRAVE Alexander**
**3)SWAN Julian Francis Ralph**

(57) Abstract :
The present invention relates to a beverage bottle having a resealable closure (32). The beverage bottle comprises a mouth. The mouth comprises an outwardly oriented bulge. The closure comprising a cap comprising a disc (16) adapted to cover the opening of the mouth. The cap further comprises a corrugated circumferential skirt (18) which has a plurality of resilient axial slots (20). The closure further comprises a collar (12) comprising an upper section (26) a lower section (30) and an intermediate section (28) which latter defines an inwardly oriented protrusion (32). The sections define an inner space accommodating the cap and allowing the cap to be axially movable. In a closed state of the closure (32) the inwardly oriented protrusion (32) compresses the skirt (18) inwardly for interlocking with the outwardly oriented bulge. In an open state of the closure the inwardly oriented protrusion is located adjacent the disc such that the skirt assumes an uncompressed state.

No. of Pages : 29 No. of Claims : 15

(12) PATENT APPLICATION PUBLICATION
(19) INDIA
(22) Date of filing of Application :05/06/2014
(21) Application No.4191/CHENP/2014 A
(43) Publication Date : 17/07/2015

(54) Title of the invention : A RE SEALABLE CLOSURE HAVING A CAM AXLE

(51) International classification :B65D41/42,B65D51/24
(31) Priority Document No :11188428.4
(32) Priority Date :09/11/2011
(33) Name of priority country :EPO
(86) International Application No :PCT/EP2012/072123
Filing Date :08/11/2012
(87) International Publication No :WO 2013/068455
(61) Patent of Addition to Application Number :NA
Filing Date :NA
(62) Divisional to Application Number :NA
Filing Date :NA

(71)**Name of Applicant :**
**1)CARLSBERG BREWERIES A/S**
Address of Applicant :Ny Carlsberg Vej 100 DK 1799 Copenhagen V Denmark
(72)**Name of Inventor :**
**1)LACY Graham Keith**
**2)BYGRAVE Alexander**
**3)SWAN Julian Francis Ralph**
**4)WEHEBRINK Max Franz**

(57) Abstract :
The present invention relates to a beverage bottle having a re seal able closure (10) and a mouth surrounded by an outwardly oriented bulge (12). A disc (16) of the closure is adapted to cover the opening of the mouth. The closure further comprises a first skirt part (18) a second skirt part (20) and a third skirt part (22). The first skirt part extends from the disc and interlocks against the outwardly oriented bulge. The second and the third skirt part extend from the first skirt part. The closure further comprises a cam axle (34) establishing a journaling axis between the second skirt part and the third skirt part. The cam axle is rotatable between a first position in which a cam surface (40) interlocks with the bulge and a second position in which the cam surface is facing away from the bulge allowing the closure to be removed.

No. of Pages : 25 No. of Claims : 15

(12) PATENT APPLICATION PUBLICATION
(19) INDIA
(22) Date of filing of Application :05/06/2014
(21) Application No.4216/CHENP/2014 A
(43) Publication Date : 17/07/2015

(54) Title of the invention : FIBROUS IM 5 MOLECULAR SIEVE AND PREPARATION PROCESS THEREOF

(51) International classification :C01B39/48,B01J29/70
(31) Priority Document No :201110353591.7
(32) Priority Date :10/11/2011
(33) Name of priority country :China
(86) International Application No :PCT/CN2012/001473
Filing Date :30/10/2012
(87) International Publication No :WO 2013/067764
(61) Patent of Addition to Application Number :NA
Filing Date :NA
(62) Divisional to Application Number :NA
Filing Date :NA

(71)**Name of Applicant :**
**1)CHINA PETROLEUM & CHEMICAL CORPORATION**
Address of Applicant :22 Chaoyangmen North Street Chaoyang District Beijing 100728 China
**2)FUSHUN RESEARCH INSTITUTE OF PETROLEUM AND PETROCHEMICALS SINOPEC**
(72)**Name of Inventor :**
**1)YANG Weiya**
**2)LING Fengxiang**
**3)WANG Shaojun**
**4)SHEN Zhiqi**

(57) Abstract :
Disclosed is a fibrous IM 5 molecular sieve and a preparation process thereof. An appropriate amount of long carbon chain quaternary ammonium salt surfactant is added into an IM 5 molecular sieve preparation system the template/surfactant molar ratio being approximately 5 to approximately 20 with the surfactant and the organic template forming synergistic effects such that the original rod like IM 5 molecular sieve becomes fibrous. When compared with a rod like IM 5 molecular sieve the fibrous IM 5 molecular sieve has a larger aspect ratio and therefore has a relatively high peripheral crystal face exposure rate facilitating the improvement in selectivity for the corresponding catalytic reaction on the crystal face.

No. of Pages : 14 No. of Claims : 11

(12) PATENT APPLICATION PUBLICATION
(19) INDIA
(22) Date of filing of Application :05/06/2014
(21) Application No.4217/CHENP/2014 A
(43) Publication Date : 17/07/2015

(54) Title of the invention : METHOD FOR PRODUCING TRANSPARENT CERAMIC OBJECTS BY MEANS OF FLUIDISED BED GRANULATION

(51) International classification :C04B35/115,C04B35/44,C04B35/443
(31) Priority Document No :10 2011 086 100.9
(32) Priority Date :10/11/2011
(33) Name of priority country :Germany
(86) International Application No :PCT/EP2012/072344
Filing Date :12/11/2012
(87) International Publication No :WO 2013/068576
(61) Patent of Addition to Application Number :NA
Filing Date :NA
(62) Divisional to Application Number :NA
Filing Date :NA

(71)**Name of Applicant :**
**1)CERAMTEC ETEC GMBH**
Address of Applicant :An der Burg S¼lz 17 53797 Lohmar Germany
(72)**Name of Inventor :**
**1)SCHNETTER Lars**

(57) Abstract :
The invention relates to a method for producing transparent ceramic objects having an RIT > 10% in the wave length range of 300nm to 4000nm and a wall thickness of 2 mm. Said method consists of the following steps: producing a slip by dispersing a ceramic powder the particle size of which is d50 < 5µm preferably between 5nm and 500nm; producing a granular material the particle size of which is d50 < 1mm preferably between 50µm and 500µm more preferably between 80µm and 300µm from the slip by means of fluidised bed granulation; pressing the granular material in a simple non cyclical manner to form a green body; sintering the green body to form a sintered body; and re densifying the sintered body.

No. of Pages : 14 No. of Claims : 7

(12) PATENT APPLICATION PUBLICATION
(21) Application No.4218/CHENP/2014 A
(19) INDIA
(22) Date of filing of Application :05/06/2014
(43) Publication Date : 17/07/2015

(54) Title of the invention : CLOUD EDGE TOPOLOGIES

(51) International classification :G06F15/16,G06F9/06
(31) Priority Document No :13/337291
(32) Priority Date :27/12/2011
(33) Name of priority country :U.S.A.
(86) International Application No :PCT/US2012/070427
Filing Date :19/12/2012
(87) International Publication No :WO 2013/101563
(61) Patent of Addition to Application Number :NA
Filing Date :NA
(62) Divisional to Application Number :NA
Filing Date :NA

(71)**Name of Applicant :**
**1)MICROSOFT CORPORATION**
Address of Applicant :One Microsoft Way Redmond Washington 98052 6399 U.S.A.
(72)**Name of Inventor :**
**1)CHANDRAMOULI Badrish**
**2)NATH Suman K.**
**3)ZHOU Wenchao**

(57) Abstract :
The description relates to cloud edge topologies. Some aspects relate to cloud edge applications and resource usage in various cloud edge topologies. Another aspect of the present cloud edge topologies can relate to the specification of cloud edge applications using a temporal language. A further aspect can involve an architecture that runs data stream management systems (DSMSs) engines on the cloud and cloud edge computers to run query parts.

No. of Pages : 38 No. of Claims : 10

(12) PATENT APPLICATION PUBLICATION
(21) Application No.4207/CHENP/2014 A
(19) INDIA
(22) Date of filing of Application :05/06/2014
(43) Publication Date : 17/07/2015

(54) Title of the invention : SURFACE EMITTING LASER ELEMENT METHOD FOR MANUFACTURING A SURFACE EMITTING LASER ELEMENT AND ATOMIC OSCILLATOR

(51) International classification :H01S5/183,H03L7/26
(31) Priority Document No :2011264908
(32) Priority Date :02/12/2011
(33) Name of priority country :Japan
(86) International Application No :PCT/JP2012/081582
Filing Date :29/11/2012
(87) International Publication No :WO 2013/081176
(61) Patent of Addition to Application Number :NA
Filing Date :NA
(62) Divisional to Application Number :NA
Filing Date :NA

(71)**Name of Applicant :**
**1)RICOH COMPANY LTD.**
Address of Applicant :3 6 Nakamagome 1 chome Ohta ku Tokyo 1438555 Japan
(72)**Name of Inventor :**
**1)SUZUKI Ryoichiro**
**2)SATO Shunichi**

(57) Abstract :
Disclosed is a surface emitting laser element including a semiconductor substrate and plural surface emitting lasers configured to emit light with mutually different wavelengths each surface emitting laser including a lower Bragg reflector provided on the semiconductor substrate a resonator provided on the lower Bragg reflector an upper Bragg reflector provided on the resonator and a wavelength adjustment layer provided in the upper Bragg reflector or lower Bragg reflector the wavelength adjustment layers included in the surface emitting lasers having mutually different thicknesses at least one of the wavelength adjustment layers including adjustment layers made of two kinds of materials and numbers of the adjustment layers included in the wavelength adjustment layers being mutually different.

No. of Pages : 117 No. of Claims : 14

(12) PATENT APPLICATION PUBLICATION
(19) INDIA
(22) Date of filing of Application :05/06/2014
(21) Application No.4208/CHENP/2014 A
(43) Publication Date : 17/07/2015

(54) Title of the invention : FLUID COLLECTION AND EXPULSION APPARATUS

(51) International classification :A61F5/44,A61M1/00
(31) Priority Document No :1119676.3
(32) Priority Date :15/11/2011
(33) Name of priority country :U.K.
(86) International Application No :PCT/GB2012/052835
Filing Date :15/11/2012
(87) International Publication No :WO 2013/072689
(61) Patent of Addition to Application Number :NA
Filing Date :NA
(62) Divisional to Application Number :NA
Filing Date :NA

(71)**Name of Applicant :**
**1)ALBERT MEDICAL DEVICES LIMITED**
Address of Applicant :Liverpool Science Park 131 Mount Pleasant Street Liverpool L3 5TF U.K.
(72)**Name of Inventor :**
**1)WILLS Trevor**

(57) Abstract :
A centrifugal pump (20) for use with a portable fluid collection apparatus for collecting fluid produced by a person the centrifugal pump comprising a substantially cylindrical pump chamber (26) having an inner diameter (D3) a fluid inlet (24) in fluid communication with said pump chamber and a fluid outlet (28) in fluid communication with said pump chamber. The pump further comprises an impeller (10) having an outer diameter (D2) and being rotatably mounted on a driveshaft (22) within said pump chamber intermediate said fluid inlet and said fluid outlet where said driveshaft is rotatable by driving means to rotate said impeller in use and accelerate fluid flowing into said pump chamber through said fluid inlet and out of said fluid outlet. The inner diameter of the pump chamber is substantially equal to or greater than 1.40 times the outer diameter of the impeller.

No. of Pages : 31 No. of Claims : 45

(12) PATENT APPLICATION PUBLICATION
(19) INDIA
(22) Date of filing of Application :05/06/2014
(21) Application No.4192/CHENP/2014 A
(43) Publication Date : 17/07/2015

(54) Title of the invention : STARTING A SMELTING PROCESS

(51) International classification :C21B11/00,F27B3/18,C21B7/00
(31) Priority Document No :2011905068
(32) Priority Date :06/12/2011
(33) Name of priority country :Australia
(86) International Application No :PCT/AU2012/001486
Filing Date :06/12/2012
(87) International Publication No :WO 2013/082658
(61) Patent of Addition to Application Number :NA
Filing Date :NA
(62) Divisional to Application Number :NA
Filing Date :NA

(71)**Name of Applicant :**
**1)TECHNOLOGICAL RESOURCES PTY. LIMITED**
Address of Applicant :123 Albert Street Brisbane QLD 4000 Australia
(72)**Name of Inventor :**
**1)DRY Rodney James**
**2)MEIJER Hendrikus Koenraad Albertus**

(57) Abstract :
A method of starting a molten bath based melting process includes commencing supplying cold oxygen containing gas and cold carbonaceous material into a main chamber of a smelting vessel within at most 3 hours after completing a hot metal charge into the vessel and igniting the carbonaceous material and heating the main chamber and molten metal in the main chamber.

No. of Pages : 25 No. of Claims : 14

(12) PATENT APPLICATION PUBLICATION
(19) INDIA
(22) Date of filing of Application :05/06/2014
(21) Application No.4193/CHENP/2014 A
(43) Publication Date : 17/07/2015

(54) Title of the invention : RESPIRATOR MADE FROM IN SITU AIR LAID WEB(S)

(51) International classification :A62B18/02,A62B18/08,A62B7/10
(31) Priority Document No :13/315881
(32) Priority Date :09/12/2011
(33) Name of priority country :U.S.A.
(86) International Application No :PCT/US2012/068183
Filing Date :06/12/2012
(87) International Publication No :WO 2013/086146
(61) Patent of Addition to Application Number :NA
Filing Date :NA
(62) Divisional to Application Number :NA
Filing Date :NA

(71)**Name of Applicant :**
**1)3M INNOVATIVE PROPERTIES COMPANY**
Address of Applicant :3M Center Post Office Box 33427 Saint Paul Minnesota 55133 3427 U.S.A.
(72)**Name of Inventor :**
**1)TUSHAUS John T.**
**2)WU Tien T.**
**3)HOFFDAHL Gerry A.**

(57) Abstract :
A method of making a filtering face piece respirator which method includes: providing a cup shaped mold 30; providing a forming chamber 24 where the mold 30 is located and where loose fibers 22 are introduced into air in the forming chamber 24; causing the loose fibers 22 to be accumulated 10 on the mold 30 in the forming chamber 24; and bonding 12 the accumulated fibers to each other at points of fiber intersection. The inventive method thus is beneficial in that it eliminates steps in the manufacturing process. The fibers also are uniformly distributed throughout the mask body and because the webs do not have to be cut during respirator manufacture less web waste is generated.

No. of Pages : 21 No. of Claims : 21

(12) PATENT APPLICATION PUBLICATION
(19) INDIA
(22) Date of filing of Application :05/06/2014
(21) Application No.4194/CHENP/2014 A
(43) Publication Date : 17/07/2015

(54) Title of the invention : STARTING A SMELTING PROCESS

(51) International classification :C21B5/00,C21B7/00,C21B11/00
(31) Priority Document No :2011905076
(32) Priority Date :06/12/2011
(33) Name of priority country :Australia
(86) International Application No :PCT/AU2012/001487
Filing Date :06/12/2012
(87) International Publication No :WO 2013/082659
(61) Patent of Addition to Application Number :NA
Filing Date :NA
(62) Divisional to Application Number :NA
Filing Date :NA

(71)**Name of Applicant :**
**1)TECHNOLOGICAL RESOURCES PTY. LIMITED**
Address of Applicant :123 Albert Street Brisbane QLD 4000 Australia
(72)**Name of Inventor :**
**1)PILOTE Jacques**
**2)DRY Rodney James**
**3)MEIJER Hendrikus Koenraad Albertus**

(57) Abstract :
A method of starting a smelting process in a smelting vessel includes heating frozen slag and forming molten slag and draining molten slag from a forehearth connection via a forehearth and establishing a clear flow path through the forehearth connection and thereafter hot starting the smelting process.

No. of Pages : 23 No. of Claims : 9

(12) PATENT APPLICATION PUBLICATION
(19) INDIA
(22) Date of filing of Application :05/06/2014
(21) Application No.4196/CHENP/2014 A
(43) Publication Date : 17/07/2015

(54) Title of the invention : SELF CONTAINED ELECTRIC POWER PRODUCTION SYSTEM ACTIVATED AND OPERATING WITH WATER

(51) International classification :H01M4/12,H01M4/38,H01M6/32
(31) Priority Document No :.
(32) Priority Date :19/01/2012
(33) Name of priority country :Argentina
(86) International Application No :PCT/GR2011/000051
Filing Date :17/11/2011
(87) International Publication No :WO 2013/072708
(61) Patent of Addition to Application Number :NA
Filing Date :NA
(62) Divisional to Application Number :NA
Filing Date :NA

(71)**Name of Applicant :**
**1)VILANAKIS Georgios**
Address of Applicant :PO. Box 394 9 Kokkini Hani GR 715 00 Heraklion Creta Greece
(72)**Name of Inventor :**
**1)VILANAKIS Georgios**

(57) Abstract :
The electric power generation system of the invention consists of a main inner metal element rod (1) made of a mixture of eight different metals an outer metal casing sleeve (3) made of copper in a grid form and a water absorption and retention means (2) being interposed between them and is characterized by the fact that it uses water as a means of initiating and maintaining of the electric power production process said water means being absorbed and held by said water absorption and retention means (2) following immersion of the system in water.

No. of Pages : 26 No. of Claims : 20

(12) PATENT APPLICATION PUBLICATION
(21) Application No.165/CHE/2014 A
(19) INDIA
(22) Date of filing of Application :15/01/2014
(43) Publication Date : 17/07/2015

(54) Title of the invention : SYSTEMS AND METHODS FOR CORRECTING GEOMETRIC DISTORTIONS IN VIDEOS AND IMAGES

(51) International classification :G06T5/00
(31) Priority Document No :NA
(32) Priority Date :NA
(33) Name of priority country :NA
(86) International Application No :NA
Filing Date :NA
(87) International Publication No : NA
(61) Patent of Addition to Application Number :NA
Filing Date :NA
(62) Divisional to Application Number :NA
Filing Date :NA

(71)**Name of Applicant :**
**1)INFOSYS LIMITED**
Address of Applicant :IP CELL, PLOT NO.44, ELECTRONIC CITY, HOSUR ROAD, BANGALORE - 560 100 Karnataka India
(72)**Name of Inventor :**
**1)SACHIN MEHTA**
**2)DR. RAJARATHNAM NALLUSAMY**

(57) Abstract :
The technique relates to a system and method for correcting geometric distortions in videos and images. To correct the one or more geometric distortions in videos, the frames of the original and distorted video are mapped at the beginning and then the features associated with the mapped frames which are insensitive to geometric distortions are identified. In case of correcting geometric distortions in images, frame mapping is not required and thus the process starts from identifying the features insensitive to geometric distortions in the original image and distorted image. Then, the geometric distortion parameters are identified from the mapped features. After that, a frame level and video level average distortion of the geometric distortion parameters are determined. Finally, the geometric distortions are corrected based on the frame level and video level average distortion value.

No. of Pages : 35 No. of Claims : 18

(12) PATENT APPLICATION PUBLICATION
(19) INDIA
(22) Date of filing of Application :05/06/2014
(21) Application No.4219/CHENP/2014 A
(43) Publication Date : 17/07/2015

(54) Title of the invention : APPLICATION CONSISTENT SNAPSHOTS OF A SHARED VOLUME

(51) International classification :G06F15/16
(31) Priority Document No :13/333722
(32) Priority Date :21/12/2011
(33) Name of priority country :U.S.A.
(86) International Application No :PCT/US2012/069029
Filing Date :12/12/2012
(87) International Publication No :WO 2013/096022
(61) Patent of Addition to Application Number :NA
Filing Date :NA
(62) Divisional to Application Number :NA
Filing Date :NA

(71)**Name of Applicant :**
**1)MICROSOFT CORPORATION**
Address of Applicant :One Microsoft Way Redmond Washington 98052 6399 U.S.A.
(72)**Name of Inventor :**
**1)BURAGOHAIN Joydeep**
**2)SHANKAR Vinod R.**
**3)DAMATO Andrea**

(57) Abstract :
The present invention extends to methods systems and computer program products for creating a snapshot of a shared volume that is application consistent across various nodes of a cluster. The invention enables a snapshot of a volume to be initiated on one node which causes all applications in the cluster that use the volume to persist their data to the volume prior to the snapshot being created. Accordingly the snapshot is application consistent to all applications in the cluster that use the volume. The invention also enables applications on various nodes to perform post snapshot processing on the created snapshot. The invention can be used in an existing backup system that is not cluster aware to enable the existing backup system to create application consistent snapshots of a volume shared by applications across multiple nodes of a cluster.

No. of Pages : 29 No. of Claims : 15

(12) PATENT APPLICATION PUBLICATION
(19) INDIA
(22) Date of filing of Application :05/06/2014
(21) Application No.4220/CHENP/2014 A
(43) Publication Date : 17/07/2015

(54) Title of the invention : SHARING AND TRANSFERRING MESSAGE CONTENT BETWEEN USERS

(51) International classification :G06Q50/30,G06F3/048,G06Q50/10
(31) Priority Document No :13/330114
(32) Priority Date :19/12/2011
(33) Name of priority country :U.S.A.
(86) International Application No :PCT/US2012/069033
Filing Date :12/12/2012
(87) International Publication No :WO 2013/096025
(61) Patent of Addition to Application Number :NA
Filing Date :NA
(62) Divisional to Application Number :NA
Filing Date :NA

(71)**Name of Applicant :**
**1)MICROSOFT CORPORATION**
Address of Applicant :One Microsoft Way Redmond Washington 98052 6399 U.S.A.
(72)**Name of Inventor :**
**1)NALLIAH Selvaraj**
**2)BANTI Edward Thomas**
**3)DOAN Bethany Kessen**

(57) Abstract :
Messaging content that is associated with a user is selected for sharing and transferring with one or more other recipients. A user may select all/portion of the messaging content to transfer. For example a user may select a single folder from their mailbox their entire mailbox one or more conversation threads one or more subjects and the like. The selection may be made manually/automatically. For example a user may use a graphical user interface to select messaging content to share and/or messaging content may be automatically selected based on a rule and/or some other condition. After selection the selected messaging content is transferred to the other recipient(s) with which the user has selected for sharing/transferring. The recipient(s) of the selected messaging content may accept/decline the transfer of messaging content. Upon accepting the invitation the messaging content is transferred and stored in the recipient s mailbox.

No. of Pages : 30 No. of Claims : 10

(12) PATENT APPLICATION PUBLICATION
(21) Application No.151/CHE/2014 A
(19) INDIA
(22) Date of filing of Application :13/01/2014
(43) Publication Date : 17/07/2015

(54) Title of the invention : PARENTERAL COMPOSITIONS OF BENDAMUSTINE

(51) International classification :A61K
(31) Priority Document No :NA
(32) Priority Date :NA
(33) Name of priority country :NA
(86) International Application No :NA
Filing Date :NA
(87) International Publication No : NA
(61) Patent of Addition to Application Number :NA
Filing Date :NA
(62) Divisional to Application Number :NA
Filing Date :NA

(71)**Name of Applicant :**
**1)HETERO RESEARCH FOUNDATION**
Address of Applicant :HETERO DRUGS LIMITED, HETERO CORPORATE, 7-2-A2, INDUSTRIAL ESTATES, SANATH NAGAR, HYDERABAD - 500 082 Andhra Pradesh India
(72)**Name of Inventor :**
**1)PARTHASARADHI REDDY, BANDI**
**2)KHADGAPATHI, PODILI**
**3)SREEDHAR, BANDARI**

(57) Abstract :
The present invention relates to parenteral compositions of bendamustine. More particularly, the present invention relates to parenteral compositions of bendamustine in the form of solution.

No. of Pages : 13 No. of Claims : 9

(12) PATENT APPLICATION PUBLICATION
(19) INDIA
(22) Date of filing of Application :05/06/2014
(21) Application No.4214/CHENP/2014 A
(43) Publication Date : 17/07/2015

(54) Title of the invention : FREEZE PROTECTION SYSTEM FOR SOLAR RECEIVER

(51) International classification :F24J2/40
(31) Priority Document No :61/560538
(32) Priority Date :16/11/2011
(33) Name of priority country :U.S.A.
(86) International Application No :PCT/US2012/065246
Filing Date :15/11/2012
(87) International Publication No :WO 2013/074767
(61) Patent of Addition to Application Number :NA
Filing Date :NA
(62) Divisional to Application Number :NA
Filing Date :NA

(71)**Name of Applicant :**
**1)BABCOCK & WILCOX POWER GENERATION GROUP INC.**
Address of Applicant :20 S. Van Buren Avenue Barberton OH 44203 U.S.A.
(72)**Name of Inventor :**
**1)ALBRECHT Melvin J.**
**2)MARSHALL Jason M.**
**3)PERSINGER Justin A.**
**4)RAO Thanneeru D.**
**5)WASYLUK David T.**
**6)HEAP Andrew**
**7)MEDURI Phani**
**8)PACHECO James E.**
**9)SONI Gaurav**

(57) Abstract :
A solar receiver has an arrangement of heat transfer surfaces and a heat transfer fluid phase separator such as a vertical steam/water separator fluidly interconnected thereto. The receiver includes a plurality of heat transfer fluid filled components and at least one alternate heat source. When various temperature measurements indicate freezing or solidification of the fluid is possible the alternate heat source is activated to maintain a temperature of the fluid greater than the freezing/solidification point of the fluid. The application of the alternate heat source further induces natural circulation of the fluid within the components further providing freeze/solidification protection to the receiver. A controller may be configured to receive sensed temperatures of the fluid components ambient air etc. and use these temperatures relative to a threshold temperature to activate vary output and deactivate one or more alternate heat sources.

No. of Pages : 45 No. of Claims : 34

(12) PATENT APPLICATION PUBLICATION
(19) INDIA
(22) Date of filing of Application :04/06/2014
(21) Application No.4175/CHENP/2014 A
(43) Publication Date : 17/07/2015

(54) Title of the invention : BIOACTIVE COMPOSITIONS HAVING HAIR ANTI AGING ACTIVITY

(51) International classification :A61K8/97,A61Q5/00
(31) Priority Document No :61/579155
(32) Priority Date :22/12/2011
(33) Name of priority country :U.S.A.
(86) International Application No :PCT/EP2012/076131
Filing Date :19/12/2012
(87) International Publication No :WO 2013/092698
(61) Patent of Addition to Application Number :NA
Filing Date :NA
(62) Divisional to Application Number :NA
Filing Date :NA

(71)**Name of Applicant :**
**1)AKZO NOBEL CHEMICALS INTERNATIONAL B.V.**
Address of Applicant :Stationsstraat 77 NL 3811 MH Amersfoort Netherlands
(72)**Name of Inventor :**
**1)DUEVA KOGANOV Olga V.**
**2)KOGANOV Michael**
**3)RICHARDS Jeanette**
**4)DAWSON Tom**
**5)COMBS Mary Jane**

(57) Abstract :
A bioactive composition and method of using the composition is provided having anti aging antioxidant and/or free radical scavenging properties.

No. of Pages : 41 No. of Claims : 15

(12) PATENT APPLICATION PUBLICATION
(19) INDIA
(22) Date of filing of Application :04/06/2014
(21) Application No.4182/CHENP/2014 A
(43) Publication Date : 17/07/2015

(54) Title of the invention : BALLISTIC RESISTANT ARTICLE COMPRISING POLYETHYLENE TAPES

(51) International classification :F41H5/04
(31) Priority Document No :11188069.6
(32) Priority Date :07/11/2011
(33) Name of priority country :EPO
(86) International Application No :PCT/EP2012/071938
Filing Date :06/11/2012
(87) International Publication No :WO 2013/068351
(61) Patent of Addition to Application Number :NA
Filing Date :NA
(62) Divisional to Application Number :NA
Filing Date :NA

(71)**Name of Applicant :**
**1)TEIJIN ARAMID B.V.**
Address of Applicant :Velperweg 76 NL 6824 BM Arnhem Netherlands
(72)**Name of Inventor :**
**1)DE WEIJER Anton Peter**
**2)RASTOGI Sanjay**
**3)BOVENSCHEN Soon Joo**
**4)VAN DE EEM Joris**
**5)ROOS Johannes Adrianus**

(57) Abstract :
The invention pertains to a ballistic resistant moulded article comprising a compressed stack of sheets comprising high molecular weight polyethylene tapes the direction of the polyethylene tapes within the compressed stack being not unidirectionally wherein at least part of the tapes have a width of at least 2 mm and a thickness to width ratio of at least 10:1 and a density of at most 99% of the theoretical tape density. The moulded article is based on tapes which have a density below the theoretical density of the tapes. The use of low density tapes is believed to contribute to the ballistic performance of the panel.

No. of Pages : 31 No. of Claims : 9

(12) PATENT APPLICATION PUBLICATION
(19) INDIA
(22) Date of filing of Application :04/06/2014
(21) Application No.4183/CHENP/2014 A
(43) Publication Date : 17/07/2015

(54) Title of the invention : METHODS OF TREATING INFLAMMATORY DISORDERS USING ANTI M CSF ANTIBODIES

(51) International classification :C07K16/24,A61K39/395,A61P29/00
(31) Priority Document No :61/557175
(32) Priority Date :08/11/2011
(33) Name of priority country :U.S.A.
(86) International Application No :PCT/IB2012/056125
Filing Date :02/11/2012
(87) International Publication No :WO 2013/068902
(61) Patent of Addition to Application Number :NA
Filing Date :NA
(62) Divisional to Application Number :NA
Filing Date :NA

(71)**Name of Applicant :**
**1)PFIZER INC.**
Address of Applicant :235 East 42nd Street New York NY 10017 U.S.A.
(72)**Name of Inventor :**
**1)HEGEN Martin**
**2)YOUNG Deborah Ann**
**3)GUAY Heath M.**
**4)DUNUSSI JOANNOPOULOS Kyriaki**
**5)SRIDHARAN Sudhakar**
**6)DIEHL Annette**
**7)COMER Gail**
**8)OTOOLE Margot Mary**
**9)BEEBE Jean Elizabeth**
**10)FOGEL Robert**
**11)HONCZARENKO Marek**
**12)BEIDLER David**
**13)REDDY Padmalatha Sunkara**
**14)VON SCHACK David Johannes**

(57) Abstract :
The present invention relates to antibodies and antigen binding portions thereof that specifically bind to a M CSF preferably human M CSF and that function to inhibit a M CSF. The invention also relates to human anti M CSF antibodies and antigen binding portions thereof. The invention also relates to antibodies that are chimeric bispecific derivatized single chain antibodies or portions of fusion proteins. The invention also relates to isolated heavy and light chain immunoglobulins derived from human anti M CSF antibodies and nucleic acid molecules encoding such immunoglobulins. The present invention also relates to methods of making human anti M CSF antibodies compositions comprising these antibodies and methods of using the antibodies and compositions for diagnosis and treatment. The invention also provides gene therapy methods using nucleic acid molecules encoding the heavy and/or light immunoglobulin molecules that comprise the human anti M CSF antibodies. The invention also relates to transgenic animals and transgenic plants comprising nucleic acid molecules of the present invention.

No. of Pages : 302 No. of Claims : 37

(12) PATENT APPLICATION PUBLICATION
(19) INDIA
(22) Date of filing of Application :06/06/2014
(21) Application No.4237/CHENP/2014 A
(43) Publication Date : 17/07/2015

(54) Title of the invention : SOFT HAND OFF AND ROUTING DATA IN A VIRTUALIZED DISTRIBUTED ANTENNA SYSTEM

(51) International classification :G01S3/02
(31) Priority Document No :61/556685
(32) Priority Date :07/11/2011
(33) Name of priority country :U.S.A.
(86) International Application No :PCT/US2012/063721
Filing Date :06/11/2012
(87) International Publication No :WO 2013/070614
(61) Patent of Addition to Application Number :NA
Filing Date :NA
(62) Divisional to Application Number :NA
Filing Date :NA

(71)**Name of Applicant :**
**1)DALI SYSTEMS CO. LTD.**
Address of Applicant :Maples Corporate Services Limited P.O. Box 309 Ugland House South Church Street George Town Grand Cayman KY1 1104 Cayman Island
**2)DALI WIRELESS INC.**
(72)**Name of Inventor :**
**1)MEERKERK Daryl**
**2)STAPLETON Shawn Patrick**

(57) Abstract :
In some embodiments of the invention a system for managing resource use in a Distributed Antenna System is provided. The system may include: a plurality of Digital Remote Units (DRUs) configured to send and receive wireless radio signals; a plurality of sectors each configured to send and receive wireless radio signals; and a plurality of inter connected Digital Access Units (DAUs) each configured to communicate with at least one of the DRUs via optical signals and each being coupled to at least one of the sectors.

No. of Pages : 65 No. of Claims : 40

(12) PATENT APPLICATION PUBLICATION
(21) Application No.4239/CHENP/2014 A
(19) INDIA
(22) Date of filing of Application :06/06/2014
(43) Publication Date : 17/07/2015

(54) Title of the invention : COMPRESSED MODE MEASUREMENTS FOR FLEXIBLE BANDWIDTH CARRIER SYSTEMS DEVICES AND METHODS

(51) International classification :H04W24/10
(31) Priority Document No :61/568742
(32) Priority Date :09/12/2011
(33) Name of priority country :U.S.A.
(86) International Application No :PCT/US2012/068552
Filing Date :07/12/2012
(87) International Publication No :WO 2013/086401
(61) Patent of Addition to Application Number :NA
Filing Date :NA
(62) Divisional to Application Number :NA
Filing Date :NA

(71)**Name of Applicant :**
**1)QUALCOMM INCORPORATED**
Address of Applicant :Attn: International Ip Administration 5775 Morehouse Drive San Diego California 92121 1714 U.S.A.
(72)**Name of Inventor :**
**1)AWONIYI Olufunmilola O.**
**2)SOLIMAN Samir Salib**
**3)PARK Edwin C.**
**4)QUICK Jr. Roy Franklin**
**5)DAS Soumya**

(57) Abstract :
Methods systems and devices are provided that may address problems to enabling a user equipment (UE) in connected mode on a normal bandwidth cell to make inter frequency measurements on another normal bandwidth cell and a flexible bandwidth cell. Some embodiment utilize a set of compressed mode gap configurations for measuring both normal bandwidth and flexible bandwidth inter frequency cells with the following modification for flexible bandwidth cells: reducing the coherent length used by the UE; using the same cell search parameters at the UE but modifying the compressed mode gap parameters to accommodate both normal bandwidth and flexible bandwidth cell search; and/or maintaining the compressed mode gap parameters but reducing the search window size during cell search coherent accumulation. Some embodiments may configure separate compressed mode measurements configuration for normal bandwidth and flexible bandwidth measurements.

No. of Pages : 95 No. of Claims : 61

(12) PATENT APPLICATION PUBLICATION
(19) INDIA
(22) Date of filing of Application :09/06/2014
(21) Application No.4255/CHENP/2014 A
(43) Publication Date : 17/07/2015

(54) Title of the invention : ARSENIC REMEDIATION METHODS AND COATED ADSORBENT COMPOSITIONS THEREFOR

(51) International classification :B01J20/24,C02F1/44,C02F1/42
(31) Priority Document No :.
(32) Priority Date :09/06/2014
(33) Name of priority country :
(86) International Application No :PCT/IB2011/003051
Filing Date :15/12/2011
(87) International Publication No :WO 2013/088185
(61) Patent of Addition to Application Number :NA
Filing Date :NA
(62) Divisional to Application Number :NA
Filing Date :NA

(71)**Name of Applicant :**
**1)GENERAL ELECTRIC COMPANY**
Address of Applicant :1 River Road Schenectady New York 12345 U.S.A.
(72)**Name of Inventor :**
**1)DAS Kalyan**
**2)SURESH Seethalakshmi**

(57) Abstract :
Methods for making nano sized iron oxide or iron oxyhydroxide particle dispersions wherein the particles are coated onto a carrier substrate. Additionally coated adsorbent compositions are provided and include the nano sized iron oxide or iron oxyhydroxide particles adsorbed onto the surface of the substrate. Additionally methods of using the coated adsorbent compositions to reduce arsenic levels in aqueous mediums are disclosed. Water purification units are also provided and include an adsorbent layer.

No. of Pages : 18 No. of Claims : 19

(12) PATENT APPLICATION PUBLICATION
(19) INDIA
(22) Date of filing of Application :06/06/2014
(21) Application No.4250/CHENP/2014 A
(43) Publication Date : 17/07/2015

(54) Title of the invention : DEVICE FOR DOSING AN ADDITIVE SOLUTION

(51) International classification :B05C5/00,B05D1/30,A23P1/06
(31) Priority Document No :11191843.9
(32) Priority Date :05/12/2011
(33) Name of priority country :EPO
(86) International Application No :PCT/EP2012/074188
Filing Date :03/12/2012
(87) International Publication No :WO 2013/083503
(61) Patent of Addition to Application Number :NA
Filing Date :NA
(62) Divisional to Application Number :NA
Filing Date :NA

(71)**Name of Applicant :**
**1)AKZO NOBEL CHEMICALS INTERNATIONAL B.V.**
Address of Applicant :Stationsstraat 77 NL 3811 MH Amersfoort Netherlands
(72)**Name of Inventor :**
**1)BAKKENES Hendrikus Wilhelmus**
**2)VAN LOTRINGEN Theodorus Johannes Maria**

(57) Abstract :
Device (1) and method for dosing an aqueous solution (2) of an additive e.g. a non caking agent into an amount of a particulate material such as a salt. The device comprises a conveyor (4) for transporting the particulate material and a dispenser (5) arranged above the conveyor. The dispenser is connected to a supply for the aqueous solution. The dispenser comprises a pouring outlet (10) extending over at least a part of the width of the conveyor (4). The additive solution is poured with a controlled flow velocity over at least a part of the width of the conveyor (4) transporting the particulate material.

No. of Pages : 13 No. of Claims : 15

(12) PATENT APPLICATION PUBLICATION
(19) INDIA
(22) Date of filing of Application :06/06/2014
(21) Application No.4251/CHENP/2014 A
(43) Publication Date : 17/07/2015

(54) Title of the invention : IMMUNOMODULATORY CONJUGATES

(51) International classification :A61K47/48,C08B37/00,C07D487/04
(31) Priority Document No :2011904656
(32) Priority Date :09/11/2011
(33) Name of priority country :Australia
(86) International Application No :PCT/AU2012/001387
Filing Date :09/11/2012
(87) International Publication No :WO 2013/067597
(61) Patent of Addition to Application Number :NA
Filing Date :NA
(62) Divisional to Application Number :NA
Filing Date :NA

(71)**Name of Applicant :**
**1)ASCEND BIOPHARMACEUTICALS LTD**
Address of Applicant :c/ SciVentures Invenstments Pty Ltd Level 1 159 Dorcas Street South Melbourne Victoria 3205 Australia
(72)**Name of Inventor :**
**1)PIETERSZ Geoffrey Alan**
**2)LEONG Clement**

(57) Abstract :
The present invention provides an immunomodulatory compound comprising a carbohydrate polymer comprising mannose wherein the carbohydrate polymer is conjugated to at least one immune modulator. The present invention also provides for the use of this compound in immunomodulatory compositions for vaccination and gene therapy methods together with processes for its preparation.

No. of Pages : 204 No. of Claims : 136

(12) PATENT APPLICATION PUBLICATION
(21) Application No.4197/CHENP/2014 A
(19) INDIA
(22) Date of filing of Application :05/06/2014
(43) Publication Date : 17/07/2015

(54) Title of the invention : ENCRYPTED DATA ADMINISTRATION DEVICE ENCRYPTED DATA ADMINISTRATION METHOD AND ENCRYPTED DATA ADMINISTRATION PROGRAM

(51) International classification :H04L9/08
(31) Priority Document No :NA
(32) Priority Date :NA
(33) Name of priority country :NA
(86) International Application No :PCT/JP2011/079519
Filing Date :20/12/2011
(87) International Publication No :WO 2013/094018
(61) Patent of Addition to Application Number :NA
Filing Date :NA
(62) Divisional to Application Number :NA
Filing Date :NA

(71)**Name of Applicant :**
**1)Mitsubishi Electric Corporation**
Address of Applicant :7 3 Marunouchi 2 chomeChiyoda ku Tokyo 1008310 Japan
(72)**Name of Inventor :**
**1)ICHIKAWA Sachihiro**
**2)MATSUDA Nori**
**3)YAMANAKA Tadakazu**
**4)TAKASHIMA Katsuyuki**

(57) Abstract :
An objective of the present invention is to implement an invalidation protocol of a secret key which is usable even in a mathematical function encryption protocol. In an encryption processing system (10) an encryption protocol is used with which a secret key cannot be used to decrypt encrypted data when attribute information and key information which are set in the encrypted data do not correspond to attribute information and key information which are set in the secret key. An encrypted data administration device (200) is disposed which carries out a relay between a user terminal (100) which carries out data encryption and decryption and an encrypted data storage device (300) which stores the encrypted data. The encrypted data administration device (200) determines whether a user whose secret key is invalid is included among users who have attribute information which is set in the encrypted data which is acquired from the encrypted data storage unit (300) and sets to the encrypted data as the key information different values depending on the determination result. The encrypted data administration device (200) transmits to the user terminal (100) the encrypted data for which the key information is set.

No. of Pages : 70 No. of Claims : 11

(12) PATENT APPLICATION PUBLICATION
(19) INDIA
(22) Date of filing of Application :05/06/2014
(21) Application No.4198/CHENP/2014 A
(43) Publication Date : 17/07/2015

(54) Title of the invention : ROLLING MILL DRIVE COMPRISING A TOOTHED ARTICULATED SPINDLE

(51) International classification :B21B35/14
(31) Priority Document No :10 2011 086 094.0
(32) Priority Date :10/11/2011
(33) Name of priority country :Germany
(86) International Application No :PCT/EP2012/067382
Filing Date :06/09/2012
(87) International Publication No :WO 2013/068148
(61) Patent of Addition to Application Number :NA
Filing Date :NA
(62) Divisional to Application Number :NA
Filing Date :NA

(71)**Name of Applicant :**
**1)SMS SIEMAG AG**
Address of Applicant :Eduard Schloemann Strae 4 40237 D¼sseldorf Germany
(72)**Name of Inventor :**
**1)GRIMMEL R¼diger**
**2)LAZZARO Klaus**

(57) Abstract :
The invention relates to a rolling mill drive (1) having an axially displaceable toothed articulated spindle (3) extending between a toothed articulated element (50) arranged between an interlocking chamber (20) on the roller side and a toothed articulated element (52) arranged in an interlocking chamber (40) on the transmission side wherein at least one of the interlocking chambers (20 40) is filled with a lubricating medium wherein the lubricating medium pretensions the toothed articulated spindle (3) with an axial force (F) directed towards the roller side (WS).

No. of Pages : 29 No. of Claims : 13

(12) PATENT APPLICATION PUBLICATION
(19) INDIA
(22) Date of filing of Application :03/06/2014
(21) Application No.4151/CHENP/2014 A
(43) Publication Date : 17/07/2015

(54) Title of the invention : METHOD FOR OBTAINING A DIALKYL CARBONATE AND AN ALKYLENE GLYCOL

(51) International classification :C07C68/08,C07C68/06,C07C69/96
(31) Priority Document No :11191894.2
(32) Priority Date :05/12/2011
(33) Name of priority country :EPO
(86) International Application No :PCT/EP2012/074478
Filing Date :05/12/2012
(87) International Publication No :WO 2013/083618
(61) Patent of Addition to Application Number :NA
Filing Date :NA
(62) Divisional to Application Number :NA
Filing Date :NA

(71)**Name of Applicant :**
**1)BASF SE**
Address of Applicant :67056 Ludwigshafen Germany
(72)**Name of Inventor :**
**1)SCHMIDT Andrea**
**2)BOCK Michael**
**3)R–TTGER Roderich**
**4)BAUMANN Robert**
**5)FRANZKE Axel**

(57) Abstract :
The invention relates to a method for obtaining a dialkyl carbonate and an alkylene glycol from a material flow containing dialkyl carbonate alkylene carbonate alkylene glycol and alcohol said method having the following steps: (a) separating a material flow (5) containing dialkyl carbonate and alkylene glycol in the form of a heteroazeotrope from the material flow containing dialkyl carbonate alkylene carbonate alkylene glycol and alcohol in a distillative manner in a first distillation stage (1) and (b) separating the material flow (5) containing dialkyl carbonate and alkylene glycol in the form of a heteroazeotrope into a first raw product flow (27) which substantially contains dialkyl carbonate and a second raw product flow (29) which substantially contains alkylene glycol in a device for the purpose of a phase separation (25).

No. of Pages : 30 No. of Claims : 14

(12) PATENT APPLICATION PUBLICATION
(19) INDIA
(22) Date of filing of Application :05/06/2014
(21) Application No.4203/CHENP/2014 A
(43) Publication Date : 17/07/2015

(54) Title of the invention : GRAPHICS PROCESSING UNIT WITH COMMAND PROCESSOR

(51) International classification :G06T15/00
(31) Priority Document No :13/327069
(32) Priority Date :15/12/2011
(33) Name of priority country :U.S.A.
(86) International Application No :PCT/US2012/066079
Filing Date :20/11/2012
(87) International Publication No :WO 2013/089989
(61) Patent of Addition to Application Number :NA
Filing Date :NA
(62) Divisional to Application Number :NA
Filing Date :NA

(71)**Name of Applicant :**
**1)QUALCOMM INCORPORATED**
Address of Applicant :Attn: International IP Administration 5775 Morehouse Drive San Diego California 92121 1714 U.S.A.
(72)**Name of Inventor :**
**1)NORDLUND Petri Olavi**
**2)ARVO Jukka Pekka**
**3)SIMPSON Robert J.**

(57) Abstract :
Aspects of the disclosure relate to a method of controlling a graphics processing unit. In an example the method includes receiving one or more tasks from a host processor and scheduling independently from the host processor the one or more tasks to be selectively executed by a shader processor and one or more fixed function hardware units wherein the shader processor is configured to execute a plurality of instructions in parallel and the one or more fixed function hardware units are configured to render graphics data.

No. of Pages : 37 No. of Claims : 25

(12) PATENT APPLICATION PUBLICATION
(19) INDIA
(22) Date of filing of Application :05/06/2014
(21) Application No.4204/CHENP/2014 A
(43) Publication Date : 17/07/2015

(54) Title of the invention : HERBICIDAL ISOXAZOLO[5 4 B]PYRIDINES

(51) International classification :A01N43/90,C07D498/04,A01P13/00
(31) Priority Document No :61/585718
(32) Priority Date :12/01/2012
(33) Name of priority country :U.S.A.
(86) International Application No :PCT/EP2013/050080
Filing Date :04/01/2013
(87) International Publication No :WO 2013/104561
(61) Patent of Addition to Application Number :NA
Filing Date :NA
(62) Divisional to Application Number :NA
Filing Date :NA

(71)**Name of Applicant :**
**1)BASF SE**
Address of Applicant :67056 Ludwigshafen Germany
(72)**Name of Inventor :**
**1)MICHROWSKA PIANOWSKA Anna Aleksandra**
**2)KORDES Markus**
**3)HUTZLER Johannes**
**4)NEWTON Trevor William**
**5)EVANS Richard Roger**
**6)KREUZ Klaus**
**7)GROSSMANN Klaus**
**8)SEITZ Thomas**
**9)KLOET Andree van der**
**10)WITSCHEL Matthias**
**11)PARRA RAPADO Liliana**
**12)LERCHL Jens**

(57) Abstract :
The invention relates to isoxazolo[5 4 b]pyridine compounds of formula (I) to the agriculturally useful salts of isoxazolo[5 4 b]pyridine compounds of formula (I) and to their use as herbicides.

No. of Pages : 74 No. of Claims : 14

(12) PATENT APPLICATION PUBLICATION
(19) INDIA
(22) Date of filing of Application :05/06/2014
(21) Application No.4205/CHENP/2014 A
(43) Publication Date : 17/07/2015

(54) Title of the invention : SYSTEMS AND METHODS FOR TRAFFIC AGGREGATION ON MULTIPLE WAN BACKHAULS AND MULTIPLE DISTINCT LAN NETWORKS

(51) International classification :H04L12/28
(31) Priority Document No :NA
(32) Priority Date :NA
(33) Name of priority country :NA
(86) International Application No :PCT/US2011/063326
Filing Date :05/12/2011
(87) International Publication No :WO 2013/085485
(61) Patent of Addition to Application Number :NA
Filing Date :NA
(62) Divisional to Application Number :NA
Filing Date :NA

(71)**Name of Applicant :**
**1)ADAPTIVE SPECTRUM AND SIGNAL ALIGNMENT INC.**
Address of Applicant :333 Twin Dolphin Drive Redwood City CA 94065 U.S.A.
(72)**Name of Inventor :**
**1)CIOFFI John**
**2)TEHRANI Ardavan Maleki**
**3)RHEE Wonjong**
**4)BHAGAVATULA Ramya**
**5)CHOW Peter**
**6)KERPEZ Kenneth**
**7)GALLI Stefano**
**8)GOLDBURG Marc**
**9)YUN Sungho**

(57) Abstract :
In accordance with embodiments disclosed herein there are provided methods systems mechanisms techniques and apparatuses for traffic aggregation on multiple WAN backhauls and multiple distinct LAN networks; for traffic load balancing on multiple WAN backhauls and multiple distinct LAN networks; and for performing self healing operations utilizing multiple WAN backhauls serving multiple distinct LAN networks. For example in one embodiment a first Local Area Network (LAN) access device is to establish a first LAN; a second LAN access device is to establish a second LAN; a first Wide Area Network (WAN) backhaul connection is to provide the first LAN access device with WAN connectivity; a second WAN backhaul connection is to provide the second LAN access device with WAN connectivity; and a traffic aggregation unit is to form a logically bonded WAN interface over the first WAN backhaul and the second WAN backhaul. In some embodiments an optional traffic de aggregation unit may be used.

No. of Pages : 104 No. of Claims : 55

(12) PATENT APPLICATION PUBLICATION
(21) Application No.4206/CHENP/2014 A
(19) INDIA
(22) Date of filing of Application :05/06/2014
(43) Publication Date : 17/07/2015

(54) Title of the invention : DYNAMIC LINEAR CONTROL METHODS AND APPARATUS FOR VARIABLE SPEED PUMP CONTROL

(51) International classification :G05D7/00
(31) Priority Document No :61/576737
(32) Priority Date :16/12/2011
(33) Name of priority country :U.S.A.
(86) International Application No :PCT/US2012/070138
Filing Date :17/12/2012
(87) International Publication No :WO 2013/090907
(61) Patent of Addition to Application Number :NA
Filing Date :NA
(62) Divisional to Application Number :NA
Filing Date :NA

(71)**Name of Applicant :**
**1)FLUID HANDLING LLC**
Address of Applicant :8200 N. Austin Avenue Morton Grove Illinois 60053 U.S.A.
(72)**Name of Inventor :**
**1)CHENG Andrew A.**
**2)GU James J.**
**3)SCOTT Graham A.**

(57) Abstract :
Apparatus such as a pump controller features a signal processor configured at least to: receive signaling containing information about a linear set point control curve based at least partly on an adaptive set point control curve related to fluid being pumped by a pump in a pumping system and determine a control set point based at least partly on the signaling received. The signal processor may be configured to provide a control signal containing information to control the pump based on the control set point determined.

No. of Pages : 30 No. of Claims : 24

(12) PATENT APPLICATION PUBLICATION
(21) Application No.4230/CHENP/2014 A
(19) INDIA
(22) Date of filing of Application :06/06/2014
(43) Publication Date : 17/07/2015

(54) Title of the invention : METHOD FOR IDENTIFYING FAULT DIRECTION WITHOUT VOLTAGE MEASUREMENT INFORMATION AND DIRECTIONAL ELEMENT THEREOF

(51) International classification :G01R31/08,H02H3/38
(31) Priority Document No :NA
(32) Priority Date :NA
(33) Name of priority country :NA
(86) International Application No :PCT/CN2012/070424
Filing Date :16/01/2012
(87) International Publication No :WO 2013/106985
(61) Patent of Addition to Application Number :NA
Filing Date :NA
(62) Divisional to Application Number :NA
Filing Date :NA

(71)**Name of Applicant :**
**1)ABB RESEARCH LTD.**
Address of Applicant :Affolternstrasse 44 CH 8050 Zurich Switzerland
(72)**Name of Inventor :**
**1)LI Youyi**
**2)SU Bin**

(57) Abstract :
The present invention discloses a method for identifying the fault direction without voltage measurement information and directional element thereof which comprises: as to any one of protections measuring the current value of the local line; calculating the fault component current based on said current value and further calculating the phase angle of said fault component current; obtaining the phase angles of fault component currents from at least other two lines which are connected to the same busbar with said local line; comparing the phase angle of fault component current of said local line with that of the other lines; and identifying the fault direction based on the result of the comparison. The proposed methods and directional element without voltage measurement information can be used in both distribution and transmission systems. It shall be noted that the proposed solutions can also be used for any applications which need fault direction without available voltage information.

No. of Pages : 34 No. of Claims : 15

(12) PATENT APPLICATION PUBLICATION
(19) INDIA
(22) Date of filing of Application :06/06/2014
(21) Application No.4231/CHENP/2014 A
(43) Publication Date : 17/07/2015

(54) Title of the invention : STARTING A SMELTING PROCESS

(51) International classification :C21B5/00,C21C5/00,C21C5/04
(31) Priority Document No :2011905072
(32) Priority Date :06/12/2011
(33) Name of priority country :Australia
(86) International Application No :PCT/AU2012/001481
Filing Date :06/12/2012
(87) International Publication No :WO 2013/082653
(61) Patent of Addition to Application Number :NA
Filing Date :NA
(62) Divisional to Application Number :NA
Filing Date :NA

(71)**Name of Applicant :**
**1)TECHNOLOGICAL RESOURCES PTY. LIMITED**
Address of Applicant :123 Albert Street Brisbane QLD 4000 Australia
(72)**Name of Inventor :**
**1)PILOTE Jacques**
**2)DRY Rodney James**
**3)MEIJER Hendrikus Koenraad Albertus**

(57) Abstract :
A method of starting a molten bath based melting process includes establishing a sufficiently large and stable hot zone for ignition of oxygen and coal in a main chamber of a smelting vessel by independent means i.e. independently of and before supplying cold oxygen and coal into the main chamber.

No. of Pages : 25 No. of Claims : 21

(12) PATENT APPLICATION PUBLICATION
(19) INDIA
(22) Date of filing of Application :06/06/2014
(21) Application No.4243/CHENP/2014 A
(43) Publication Date : 17/07/2015

(54) Title of the invention : SYNTHESIS OF HIGH CALORIC FUELS AND CHEMICALS

(51) International classification :C07C45/00
(31) Priority Document No :61/558321
(32) Priority Date :10/11/2011
(33) Name of priority country :U.S.A.
(86) International Application No :PCT/US2012/064225
Filing Date :08/11/2012
(87) International Publication No :WO 2013/070966
(61) Patent of Addition to Application Number :NA
Filing Date :NA
(62) Divisional to Application Number :NA
Filing Date :NA

(71)**Name of Applicant :**
**1)PIONEER ENERGY**
Address of Applicant :11111 W. Avenue Unit A Lakewood CO 80215 U.S.A.
(72)**Name of Inventor :**
**1)HENRI John**
**2)ZYGMUNT Jan**
**3)BERGREN Mark**
**4)ZUBRIN Robert**

(57) Abstract :
In one embodiment the present application discloses methods to selectively synthesize higher alcohols and hydrocarbons useful as fuels and industrial chemicals from syngas and biomass. Ketene and ketonization chemistry along with hydrogenation reactions are used to synthesize fuels and chemicals. In another embodiment ketene used to form fuels and chemicals may be manufactured from acetic acid which in turn can be synthesized from synthesis gas which is produced from coal biomass natural gas etc.

No. of Pages : 78 No. of Claims : 37

(12) PATENT APPLICATION PUBLICATION
(19) INDIA
(22) Date of filing of Application :09/06/2014
(21) Application No.4260/CHENP/2014 A
(43) Publication Date : 17/07/2015

(54) Title of the invention : SEGMENTED GRAPHENE NANORIBBONS

(51) International classification :C01B31/04,C08G61/10
(31) Priority Document No :11188978.8
(32) Priority Date :14/11/2011
(33) Name of priority country :EPO
(86) International Application No :PCT/EP2012/072445
Filing Date :13/11/2012
(87) International Publication No :WO 2013/072292
(61) Patent of Addition to Application Number :NA
Filing Date :NA
(62) Divisional to Application Number :NA
Filing Date :NA

(71)**Name of Applicant :**
**1)BASF SE**
Address of Applicant :67056 Ludwigshafen Germany
**2)EMPA MATERIALS SCIENCE AND TECHNOLOGY**
(72)**Name of Inventor :**
**1)FASEL Roman**
**2)RUFFIEUX Pascal**
**3)MLLEN Klaus**
**4)BLANKENBURG Stephan**
**5)CAI Jinming**
**6)FENG Xinliang**
**7)PIGNEDOLI Carlo**
**8)PASSERONE Daniele**

(57) Abstract :
The present invention relates to a segmented graphene nanoribbon comprising at least two different graphene segments covalently linked to each other each graphene segment having a monodisperse segment width wherein the segment width of at least one of said graphene segments is 4 nm or less and to a method for preparing it by polymerizing at least one polycyclic aromatic monomer compound and/or at least one oligo phenylene aromatic hydrocarbon monomer compound to form at least one polymer and by at least partially cyclodehydrogenating the one or more polymer.

No. of Pages : 59 No. of Claims : 21

(12) PATENT APPLICATION PUBLICATION
(19) INDIA
(22) Date of filing of Application :09/06/2014
(21) Application No.4261/CHENP/2014 A
(43) Publication Date : 17/07/2015

(54) Title of the invention : BASEBAND SIGNAL PROCESSING CLUSTER

(51) International classification :H04W28/08
(31) Priority Document No :11306485.1
(32) Priority Date :14/11/2011
(33) Name of priority country :EPO
(86) International Application No :PCT/EP2012/068859
Filing Date :25/09/2012
(87) International Publication No :WO 2013/072108
(61) Patent of Addition to Application Number :NA
Filing Date :NA
(62) Divisional to Application Number :NA
Filing Date :NA

(71)**Name of Applicant :**
**1)ALCATEL LUCENT**
Address of Applicant :3 avenue Octave Grard F 75007 Paris France
(72)**Name of Inventor :**
**1)HABERLAND Bernd**
**2)DERAKHSHAN Fariborz**
**3)GROB LIPSKI Heidrun**

(57) Abstract :
Embodiments relate to a baseband signal processing cluster (100) of a wireless communication network the baseband signal processing cluster (100) comprising a plurality of baseband signal processing units (110) wherein at least one of the baseband signal processing units (110) is coupled to at least one remote radio head of the wireless communication network and comprises a unit specific processing resource management entity (120) operable to manage a processing resource allocation within its associated baseband signal processing unit (110) an intra cluster processing resource management entity (130) coupled to at least one of the unit specific processing resource management entities (120) and operable to manage a processing resource allocation among the plurality of baseband signal processing units (100) and an inter cluster processing resource management entity (140) coupled to the intra cluster processing resource management entity (130) and operable to exchange information with at least one remote inter cluster processing resource management entity of a remote baseband signal processing cluster of the wireless communication network to effect a remote processing resource allocation.

No. of Pages : 43 No. of Claims : 16

(12) PATENT APPLICATION PUBLICATION
(19) INDIA
(22) Date of filing of Application :03/06/2014
(21) Application No.4152/CHENP/2014 A
(43) Publication Date : 17/07/2015

(54) Title of the invention : MULTISTAGE PROCESS FOR THE POLYMERIZATION OF OLEFINS

(51) International classification :C08F10/00,C08F2/34,C08F2/00
(31) Priority Document No :11192070.8
(32) Priority Date :06/12/2011
(33) Name of priority country :EPO
(86) International Application No:PCT/EP2012/074324
Filing Date :04/12/2012
(87) International Publication No :WO 2013/083548
(61) Patent of Addition to Application Number :NA
Filing Date :NA
(62) Divisional to Application Number :NA
Filing Date :NA

(71)**Name of Applicant :**
**1)BASELL POLYOLEFINE GMBH**
Address of Applicant :Br¼hler Strae 60 50389 Wesseling Germany
(72)**Name of Inventor :**
**1)COVEZZI Massimo**
**2)PENZO Giuseppe**
**3)MEI Gabriele**
**4)MEI Giulia**
**5)BAITA Pietro**
**6)MEIER Gerhardus**
**7)DE LUCIA Antonio**
**8)SCHUELLER Ulf**
**9)FERRARO Gianpiero**

(57) Abstract :
Process for transferring polyolefin particles from a first gas phase polymerization reactor to a second gas phase polymerization reactor in a multistage polymerization of olefins carried out in at least two serially connected gas phase polymerization reactors wherein the first gas phase reactor is a fluidized bed reactor comprising a gas distribution grid and a settling pipe which is integrated with its upper opening into the distribution grid and contains a bed of polyolefin particles which moves from top to bottom of the settling pipe the process comprising the steps of introducing a fluid into the settling pipe in an amount that an upward stream of the fluid is induced in the bed of polyolefin particles above the fluid introduction point; withdrawing polyolefin particles from the lower end of the settling pipe; and transferring the withdrawn polyolefin particles into the second gas phase polymerization reactor process for polymerizing olefins comprising such a process for transferring polyolefin particles reactor suitable as first gas phase polymerization reactor in the process for polymerizing olefins and process for discharging polyolefin particles from a fluidized bed reactor.

No. of Pages : 21 No. of Claims : 14

(12) PATENT APPLICATION PUBLICATION
(19) INDIA
(22) Date of filing of Application :03/06/2014
(21) Application No.4155/CHENP/2014 A
(43) Publication Date : 17/07/2015

(54) Title of the invention : NEW ACTINOMYCETE INTEGRATIVE AND CONJUGATIVE ELEMENT FROM ACTINOPLANES SP. SE50/110 AS PLASMID FOR GENETIC TRANSFORMATION OF RELATED ACTINOBACTERIA

(51) International classification :C07K14/365
(31) Priority Document No :11192618.4
(32) Priority Date :08/12/2011
(33) Name of priority country :EPO
(86) International Application No :PCT/EP2012/074366
Filing Date :04/12/2012
(87) International Publication No :WO 2013/083566
(61) Patent of Addition to Application Number :NA
Filing Date :NA
(62) Divisional to Application Number :NA
Filing Date :NA

(71)**Name of Applicant :**
**1)BAYER INTELLECTUAL PROPERTY GMBH**
Address of Applicant :Alfred Nobel Str. 10 40789 Monheim Germany
(72)**Name of Inventor :**
**1)KLEIN Andreas**
**2)SELBER Klaus**
**3)WEHLMANN Hermann**
**4)ROSEN Winfried**
**5)PHLER Alfred**
**6)SCHWIENTEK Patrick**
**7)KALINOWSKI Jrn**
**8)WEHMEIER Udo**

(57) Abstract :
The present invention is directed to an innate DNA sequence within the complete genome sequence of Actinoplanes sp. SE50/110 which resembles the structure of an actinomycete integrative and conjugative element (AICE). Related AICEs were used for establishing genetic manipulation tools for other bacteria in the past. In this document we describe the unique features of the specific AICE found in Actinoplanes sp. SE50/110 which are clearly distinct from any other known AICE as a whole but share minor parts with varying sequence similarity with other characterized AiCEs from other species.

No. of Pages : 46 No. of Claims : 6

(12) PATENT APPLICATION PUBLICATION
(19) INDIA
(22) Date of filing of Application :06/06/2014
(21) Application No.4247/CHENP/2014 A
(43) Publication Date : 17/07/2015

(54) Title of the invention : SYSTEMS AND METHODS FOR TRANSMITTING AND RECEIVING DISCOVERY AND PAGING MESSAGES

(51) International classification :H04W68/00,H04L29/08,H04W8/00
(31) Priority Document No :61/570704
(32) Priority Date :14/12/2011
(33) Name of priority country :U.S.A.
(86) International Application No :PCT/US2012/069798
Filing Date :14/12/2012
(87) International Publication No :WO 2013/090751
(61) Patent of Addition to Application Number :NA
Filing Date :NA
(62) Divisional to Application Number :NA
Filing Date :NA

(71)**Name of Applicant :**
**1)QUALCOMM INCORPORATED**
Address of Applicant :Attn: International IP Administration 5775 Morehouse Drive San Diego California 92121 1714 U.S.A.
(72)**Name of Inventor :**
**1)SAMPATH Hemanth**
**2)ABRAHAM Santosh Paul**
**3)MERLIN Simone**
**4)TAVILDAR Saurabh**
**5)LI Junyi**
**6)KHUDE Nilesh N.**

(57) Abstract :
Methods devices and computer program products for transmitting and receiving discovery and paging messages are described herein. In one aspect an apparatus operable in a wireless communication system includes a transmitter and receiver. The transmitter transmits a discovery packet during a first discovery interval of a plurality of discovery intervals. The discovery packet advertises a service provided in a wireless communications network and the plurality of discovery intervals include recurring time intervals when a plurality of devices are configured to transmit and receive discovery packets. The receiver receives a paging packet from a first device during a first paging interval of a plurality of paging intervals. The paging packet indicates interest in the service and the plurality of paging intervals include recurring time intervals when the plurality of devices are configured to transmit and receive paging packets. The plurality of paging intervals do not overlap the plurality of discovery intervals.

No. of Pages : 63 No. of Claims : 66

(12) PATENT APPLICATION PUBLICATION
(19) INDIA
(22) Date of filing of Application :06/06/2014
(21) Application No.4248/CHENP/2014 A
(43) Publication Date : 17/07/2015

(54) Title of the invention : IP ADDRESS DISCOVERY FOR TDLS

(51) International classification :H04L29/06,H04W76/02
(31) Priority Document No :13/334240
(32) Priority Date :22/12/2011
(33) Name of priority country :U.S.A.
(86) International Application No :PCT/US2012/071061
Filing Date :20/12/2012
(87) International Publication No :WO 2013/096678
(61) Patent of Addition to Application Number :NA
Filing Date :NA
(62) Divisional to Application Number :NA
Filing Date :NA

(71)**Name of Applicant :**
**1)QUALCOMM INCORPORATED**
Address of Applicant :Attn: International Ip Administration 5775 Morehouse Drive San Diego California 92121 1714 U.S.A.
(72)**Name of Inventor :**
**1)RAJAMANI Krishnan**
**2)WENTINK Maarten Menzo**

(57) Abstract :
A method of peer discovery in a communications network includes transmitting by a first client station a request to a second client station; receiving a response of the second client station at least one of the request and the response including a local IP address of the corresponding client station; and establishing a tunneled direct link setup (TDLS)direct link between the first client station and the second client station based on the local IP address.

No. of Pages : 36 No. of Claims : 61

(12) PATENT APPLICATION PUBLICATION
(19) INDIA
(22) Date of filing of Application :06/06/2014
(21) Application No.4226/CHENP/2014 A
(43) Publication Date : 17/07/2015

(54) Title of the invention : HIGH SILICON BEARING DUAL PHASE STEELS WITH IMPROVED DUCTILITY

(51) International classification :C22C38/00,C22C38/02,C22C38/04
(31) Priority Document No :61/629757
(32) Priority Date :28/11/2011
(33) Name of priority country :U.S.A.
(86) International Application No :PCT/US2012/066877
Filing Date :28/11/2012
(87) International Publication No :WO 2013/082171
(61) Patent of Addition to Application Number :NA
Filing Date :NA
(62) Divisional to Application Number :NA
Filing Date :NA

(71)**Name of Applicant :**
**1)ARCELORMITTAL INVESTIGACIN Y DESARROLLO SL**
Address of Applicant :CL/Chavarri 6 E 48910 Sestao Bizkaia Spain
(72)**Name of Inventor :**
**1)JUN Hyun Jo**
**2)POTTORE Narayan S.**
**3)FONSTEIN Nina Michailovna**

(57) Abstract :
A dual phase steel (martensite + ferrite) having a tensile strength of at least 980 MPa and a total elongation of at least 15%. The dual phase steel may have a total elongation of at least 18%. The dual phase steel may also have a tensile strength of at least 1180 MPa. The dual phase steel may include between 0.5 3.5 wt.% Si and more preferably between 1.5 2.5 wt.% Si.

No. of Pages : 22 No. of Claims : 15

(12) PATENT APPLICATION PUBLICATION
(19) INDIA
(22) Date of filing of Application :10/01/2014
(21) Application No.139/CHE/2014 A
(43) Publication Date : 17/07/2015

(54) Title of the invention : PHARMACEUTICAL COMPOSITIONS OF NON-STEROIDAL ANTI-INFLAMMATORY DRUGS, DECONGESTANTS AND ANTI-HISTAMINES

(51) International classification :A61K31/00
(31) Priority Document No :NA
(32) Priority Date :NA
(33) Name of priority country :NA
(86) International Application No :NA
Filing Date :NA
(87) International Publication No : NA
(61) Patent of Addition to Application Number :NA
Filing Date :NA
(62) Divisional to Application Number :NA
Filing Date :NA

(71)**Name of Applicant :**
**1)AUROBINDO PHARMA LTD**
Address of Applicant :THE WATER MARK BUILDING, PLOT NO. 11, SURVEY NO. 9, KONDAPUR, HITECH CITY, HYDERABAD - 500 084 Andhra Pradesh India
(72)**Name of Inventor :**
**1)NAYAK RAHUL**
**2)GOWDA AMRUTH**
**3)VISHNUBHOTLA NAGAPRASAD**
**4)MEENAKSHISUNDERAM SIVAKUMARAN**

(57) Abstract :
The technical field of the present invention relates pharmaceutical compositions comprising one or more non-steroidal anti-inflammatory drugs (NSAID) in combination with at least one antihistamine, sympathomimetic drug (nasal decongestant, bronchodilator) cough suppressant and/or expectorant, optionally in combination with suitable pharmaceutically acceptable non-toxic carriers or excipients.

No. of Pages : 16 No. of Claims : 10

(12) PATENT APPLICATION PUBLICATION
(19) INDIA
(22) Date of filing of Application :09/06/2014
(21) Application No.4262/CHENP/2014 A
(43) Publication Date : 17/07/2015

(54) Title of the invention : SURFACE MODIFIED PIGMENTS AND NON AQUEOUS INKS THEREWITH

(51) International classification :C09B67/38,C09B67/08
(31) Priority Document No :11193407.1
(32) Priority Date :14/12/2011
(33) Name of priority country :EPO
(86) International Application No :PCT/EP2012/073145
Filing Date :21/11/2012
(87) International Publication No :WO 2013/087376
(61) Patent of Addition to Application Number :NA
Filing Date :NA
(62) Divisional to Application Number :NA
Filing Date :NA

(71)**Name of Applicant :**
**1)AGFA GRAPHICS NV**
Address of Applicant :IP Department 3622 Septestraat 27 B 2640 Mortsel Belgium
(72)**Name of Inventor :**
**1)LOCCUFIER Johan**
**2)VRIAMONT Nicolas**
**3)CALLANT Paul**

(57) Abstract :
A method for preparing a surface modified organic pigment comprising the steps of a) reacting the organic pigment in an aromatic hydrocarbon solvent with a surface modifying reagent to form a surface modified organic pigment; and b) washing and drying the surface modified organic pigment; wherein the surface modifying reagent is represented by Formula (I): wherein X is selected from the group consisting of O S and N R3; Y is selected from the group consisting of O NR4; R1 to R4 are each independently selected from the group consisting of hydrogen an alkyl group an alkenyl group an alkynyl group a aralkyl group an alkaryl group and an aryl group and heteroaryl group; with the proviso that when Y R1 is different from OH that at least one of R2 to R4 is substituted by at least one functional group having a pKa between 2.5 and 9. Surface modified organic pigments are also disclosed.

No. of Pages : 48 No. of Claims : 15

(12) PATENT APPLICATION PUBLICATION
(21) Application No.2763/CHE/2014 A
(19) INDIA
(22) Date of filing of Application :05/06/2014
(43) Publication Date : 17/07/2015

(54) Title of the invention : ARC WELDING APPARATUS, ARC WELDING SYSTEM, ANDARC WELDING METHOD

| | |
|---|---|
| (51) International classification | :B23K |
| (31) Priority Document No | :JP2013-120734 |
| (32) Priority Date | :07/06/2013 |
| (33) Name of priority country | :Japan |
| (86) International Application No | :NA |
| Filing Date | :NA |
| (87) International Publication No | : NA |
| (61) Patent of Addition to Application Number | :NA |
| Filing Date | :NA |
| (62) Divisional to Application Number | :NA |
| Filing Date | :NA |

(71)**Name of Applicant :**
**1)Kabushiki Kaisha Yaskawa Denki**
Address of Applicant :2-1, Kurosaki-Shiroishi, Yahatanishi-ku, Kitakyushu-shi, Fukuoka 806-0004 Japan
(72)**Name of Inventor :**
**1)Masafumi MURAKAMI**
**2)Taichi SAKAMOTO**

(57) Abstract :
An arc welding apparatus includes: a driving unit for advancing and retreating a welding consumable with respect to a workpiece to generate a short circuit condition and an arc condition; a state detecting unit for detecting respective starts of the short circuit condition and the arc condition based on a voltage between the workpiece and the welding consumable; a time detecting unit for detecting that an elapsed time from the start of the short circuit condition reaches a reference time using a time shorter than an estimated continuation time of the short circuit condition as the reference time; and a power control unit for reducing an electric current between the workpiece and the welding consumable corresponding to a state where the elapsed time reaches the reference time and raising the electric current after the start of the arc condition.

No. of Pages : 33 No. of Claims : 13

(12) PATENT APPLICATION PUBLICATION
(19) INDIA
(22) Date of filing of Application :03/06/2014
(21) Application No.4158/CHENP/2014 A
(43) Publication Date : 17/07/2015

(54) Title of the invention : SYSTEM AND METHOD FOR APPLYING LIQUID MIXTURES

(51) International classification :A01M7/00
(31) Priority Document No :NA
(32) Priority Date :NA
(33) Name of priority country :NA
(86) International Application No :PCT/EP2011/072802
Filing Date :14/12/2011
(87) International Publication No :WO 2013/087103
(61) Patent of Addition to Application Number :NA
Filing Date :NA
(62) Divisional to Application Number :NA
Filing Date :NA

(71)**Name of Applicant :**
**1)BASF SE**
Address of Applicant :67056 Ludwigshafen Germany
(72)**Name of Inventor :**
**1)WICHMANN Wolf Dieter**

(57) Abstract :
The present invention relates to a system for applying liquid mixtures with a main stream line 23 for conducting a main stream of a carrier liquid with a secondary stream line 3 that branches off from the main stream line 23 at a first branch point 25 and issues back into the main stream line 23 at a second branch point 26 and with at least one container 1 for receiving a mixture component said container 1 having a withdrawal opening 31 connected to the secondary stream line 3. The system according to the invention is characterised in that the container 1 comprises a metering pump 2 for conveying the mixture component located in the container 1 through the withdrawal line 32 into the secondary stream line 3 and in that the system comprises a drive unit 8 28 29 that is detachably coupled to the metering pump 2 in order to drive the metering pump 2. The invention further relates to a method that can be performed with the above specified system and to the use of the system for applying a plant protection agent.

No. of Pages : 21 No. of Claims : 13

(12) PATENT APPLICATION PUBLICATION
(19) INDIA
(22) Date of filing of Application :03/06/2014
(21) Application No.4159/CHENP/2014 A
(43) Publication Date : 17/07/2015

(54) Title of the invention : COMPOSITIONS COMPRISING AN ARYL PYRAZOLE AND A SUBSTITUTED IMIDAZOLE METHODS AND USES THEREOF

| | |
|---|---|
| (51) International classification | :A61K31/415,A61K31/4164,A61K45/06 |
| (31) Priority Document No | :61/560969 |
| (32) Priority Date | :17/11/2011 |
| (33) Name of priority country | :U.S.A. |
| (86) International Application No | :PCT/US2012/065462 |
| Filing Date | :16/11/2012 |
| (87) International Publication No | :WO 2013/074892 |
| (61) Patent of Addition to Application Number | :NA |
| Filing Date | :NA |
| (62) Divisional to Application Number | :NA |
| Filing Date | :NA |

(71)**Name of Applicant :**
**1)MERIAL LIMITED**
Address of Applicant :3239 Satellite Blvd. Duluth GA 30096 U.S.A.
(72)**Name of Inventor :**
**1)MENG Charles Q.**

(57) Abstract :
This invention relates to compositions for combating parasites in animals comprising 1 arylpyrazole compounds in combination with substituted imidazole compounds. This invention also provides for an improved methods for eradicating controlling and preventing parasite infestation in an animal comprising administering the compositions of the invention to an animal in need thereof.

No. of Pages : 96 No. of Claims : 25

(12) PATENT APPLICATION PUBLICATION
(19) INDIA
(22) Date of filing of Application :04/06/2014
(21) Application No.4178/CHENP/2014 A
(43) Publication Date : 17/07/2015

(54) Title of the invention : AUTOINJECTOR

(51) International classification :A61M5/20,A61M5/32
(31) Priority Document No :11190587.3
(32) Priority Date :24/11/2011
(33) Name of priority country :EPO
(86) International Application No :PCT/EP2012/073467
Filing Date :23/11/2012
(87) International Publication No :WO 2013/076246
(61) Patent of Addition to Application Number :NA
Filing Date :NA
(62) Divisional to Application Number :NA
Filing Date :NA

(71)**Name of Applicant :**
**1)SANOFI AVENTIS DEUTSCHLAND GMBH**
Address of Applicant :Br¼ningstrae 50 65929 Frankfurt am Main Germany
(72)**Name of Inventor :**
**1)HENLEY Thomas**
**2)CROSS David**
**3)JENNINGS Douglas Ivan**
**4)MCGINLEY Ryan Anthony**

(57) Abstract :
Described is an autoinjector (1) comprising a front case (2.1) having a first rib (2.1.2) and a second rib (2.1.3) and a rear case (2.2) telescopically coupled to the front case (2.1) and having latch arms (2.2.1) adapted to engage the first rib (2.1.2) and the second rib (2.1.3). When the front case (2.1) is in a first position relative to rear case (2.2) the latch arms (2.2.1) are engaged to the first rib (2.1.2). When the latch arms (2.2.1) disengage the first rib (2.1.2) the front case (2.1) translates to a second position relative to the rear case (2.2) an axial distance between the front case (2.1) and the rear case (2.2) increases relative to the first position the latch arms (2.2.1) engage the second rib (2.1.3).

No. of Pages : 39 No. of Claims : 23

(12) PATENT APPLICATION PUBLICATION
(19) INDIA
(22) Date of filing of Application :04/06/2014
(21) Application No.4179/CHENP/2014 A
(43) Publication Date : 17/07/2015

(54) Title of the invention : VEHICLE CATCH SYSTEMS AND METHODS

(51) International classification :E01F15/06
(31) Priority Document No :61/563343
(32) Priority Date :23/11/2011
(33) Name of priority country :U.S.A.
(86) International Application No :PCT/US2012/059269
Filing Date :09/10/2012
(87) International Publication No :WO 2013/077945
(61) Patent of Addition to Application Number :NA
Filing Date :NA
(62) Divisional to Application Number :NA
Filing Date :NA

(71)**Name of Applicant :**
**1)ENGINEERED ARRESTING SYSTEMS CORPORATION**
Address of Applicant :2550 Market Street Aston PA 19014 U.S.A.
(72)**Name of Inventor :**
**1)WYNNYTSKY Sofia**
**2)SLIMKO Mark**
**3)TORREZ Reggie**
**4)WITHERS Robert**
**5)DELONG Hugh K. III**
**6)WARRICK Danny**
**7)SCHNEIDER Kirk F.**
**8)ROSS Thomas H.**
**9)VILLA GONZALES Marcos**
**10)PAGE Dennis**
**11)MCGINLEY John Patrick**
**12)MAHAL Peter T.**
**13)ORNER Richard L. Jr.**

(57) Abstract :
A catch fence for halting the overrun of a car leaving a racetrack comprising at least two pivotable poles each pole comprising a pivot point along the pole or at its base; at least one cable extending between the at least two poles; and at least one portion of net or fencing installed between the poles supported by the at least one cable.

No. of Pages : 30 No. of Claims : 11

(12) PATENT APPLICATION PUBLICATION
(21) Application No.4180/CHENP/2014 A
(19) INDIA
(22) Date of filing of Application :04/06/2014
(43) Publication Date : 17/07/2015

(54) Title of the invention : TIMING PACING PULSES IN SINGLE CHAMBER IMPLANTABLE CARDIAC PACEMAKER SYSTEMS

(51) International classification :A61N1/365
(31) Priority Document No :13/335249
(32) Priority Date :22/12/2011
(33) Name of priority country :U.S.A.
(86) International Application No :PCT/US2012/068974
Filing Date :11/12/2012
(87) International Publication No :WO 2013/096015
(61) Patent of Addition to Application Number :NA
Filing Date :NA
(62) Divisional to Application Number :NA
Filing Date :NA

(71)**Name of Applicant :**
**1)MEDTRONIC INC.**
Address of Applicant :710 Medtronic Parkway NE Minneapolis Minnesota 55432 U.S.A.
(72)**Name of Inventor :**
**1)DEMMER Wade M**
**2)BELK Paul A**

(57) Abstract :
Methods for timing pacing pulses in an implantable single chamber pacemaker create a simulated or virtual chamber in order to apply dual chamber type algorithms and modes. For example a virtual atrium may be constructed based on information provided by the ventricle that is the timing of actual intrinsic ventricular events and the timing of paced ventricular events both of which may be sensed as ventricular depolarization by electrodes of the implanted system.

No. of Pages : 16 No. of Claims : 6

(12) PATENT APPLICATION PUBLICATION
(19) INDIA
(22) Date of filing of Application :04/06/2014
(21) Application No.4167/CHENP/2014 A
(43) Publication Date : 17/07/2015

(54) Title of the invention : METHOD OF FORMING A PHOTOVOLTAIC CELL

(51) International classification :H01L31/05,H01L27/142
(31) Priority Document No :61/568192
(32) Priority Date :08/12/2011
(33) Name of priority country :U.S.A.
(86) International Application No :PCT/US2012/067544
Filing Date :03/12/2012
(87) International Publication No :WO 2013/085829
(61) Patent of Addition to Application Number :NA
Filing Date :NA
(62) Divisional to Application Number :NA
Filing Date :NA

(71)**Name of Applicant :**
**1)DOW GLOBAL TECHNOLOGIES LLC**
Address of Applicant :2040 Dow Center Midland MI 48674 U.S.A.
(72)**Name of Inventor :**
**1)DEGROOT Marty W.**
**2)CLARK Lindsey A.**

(57) Abstract :
This invention relates to a photovoltaic cell where all metal components used in the electrical connection/electrical collection system are similar enough to avoid corrosion that may be caused by a galvanic cell effect. Specifically all the metal components should be the same or should have very similar electric potentials.

No. of Pages : 19 No. of Claims : 8

(12) PATENT APPLICATION PUBLICATION
(19) INDIA
(22) Date of filing of Application :04/06/2014
(21) Application No.4168/CHENP/2014 A
(43) Publication Date : 17/07/2015

(54) Title of the invention : JOINT CONNECTOR

(51) International classification :H01R13/422,H01R13/436,H01R13/52
(31) Priority Document No :2011245255
(32) Priority Date :09/11/2011
(33) Name of priority country :Japan
(86) International Application No :PCT/JP2012/006942
Filing Date :30/10/2012
(87) International Publication No :WO 2013/069224
(61) Patent of Addition to Application Number :NA
Filing Date :NA
(62) Divisional to Application Number :NA
Filing Date :NA

(71)**Name of Applicant :**
**1)YAZAKI CORPORATION**
Address of Applicant :4 28 Mita 1 chome Minato ku Tokyo 1080073 Japan
(72)**Name of Inventor :**
**1)HAMAI Tsuyoshi**
**2)MURO Takashi**
**3)NAGAYOSHI Tomihiko**

(57) Abstract :
A joint connector (1) includes a connector housing (20) having terminal accommodation chambers (21) configured to accommodate terminal fittings (10) and having elastically deformable locking lances (23) configured to engage with the corresponding terminal fittings (10) bus bars (32) configured to connect the terminal fittings (10) to each other and a front holder (30) to be installed in the connector housing (20) from an opposite side to a side where the terminal fittings (10) are inserted. The front holder (30) has a holder main body (31) integrated with the bus bars (32) and lance deformation prevention portions (23) configured to prevent elastic deformation of the locking lances (23). In an engagement state of the terminal fittings (10) and the locking lances (23) the lance deformation prevention portions (33) are configured to be inserted into spaces in which the locking lances (23) are deflected.

No. of Pages : 17 No. of Claims : 3

(12) PATENT APPLICATION PUBLICATION
(19) INDIA
(22) Date of filing of Application :04/06/2014
(21) Application No.4169/CHENP/2014 A
(43) Publication Date : 17/07/2015

(54) Title of the invention : AIR CONDITIONER

(51) International classification :F25B1/00,C09K5/04,C10M101/02
(31) Priority Document No :2011268850
(32) Priority Date :08/12/2011
(33) Name of priority country :Japan
(86) International Application No :PCT/JP2012/007472
Filing Date :21/11/2012
(87) International Publication No :WO 2013/084431
(61) Patent of Addition to Application Number :NA
Filing Date :NA
(62) Divisional to Application Number :NA
Filing Date :NA

(71)**Name of Applicant :**
**1)PANASONIC CORPORATION**
Address of Applicant :1006 Oaza Kadoma Kadoma shi Osaka 5718501 Japan
(72)**Name of Inventor :**
**1)FUJITAKA Akira**
**2)KAWABE Yoshikazu**
**3)MARUMOTO Kazuhiko**

(57) Abstract :
An air conditioner has a refrigeration cycle configured by connecting a compressor a condenser a decompressor and an evaporator. Sealed within the refrigeration cycle is a mixed refrigerant composed primarily of difluoromethane (R32) and tetrafluoropropene (HFO 1234yf or HFO 1234ze) and having an R32 concentration of 70% or less the mixed refrigerant circulates through the refrigeration cycle and the refrigerant condenses when the atmospheric temperature of the refrigeration cycle exceeds 50°C. This allows the discharge temperature of the compressor to be kept equal to that of the currently used R 410A with high efficiency even when the atmospheric temperature is 50°C or greater the reliability of the refrigeration cycle to be improved the warming potential of the refrigerant to be kept low and hence the warming effects to be reduced even when the refrigerant leaks into the atmosphere.

No. of Pages : 15 No. of Claims : 4

(12) PATENT APPLICATION PUBLICATION
(19) INDIA
(22) Date of filing of Application :11/01/2014
(21) Application No.149/CHE/2014 A
(43) Publication Date : 17/07/2015

(54) Title of the invention : TOPICAL TAZAROTENE SOLID LIPID NANOPARTICLES

(51) International classification :A61K
(31) Priority Document No :NA
(32) Priority Date :NA
(33) Name of priority country :NA
(86) International Application No :NA
Filing Date :NA
(87) International Publication No : NA
(61) Patent of Addition to Application Number :NA
Filing Date :NA
(62) Divisional to Application Number :NA
Filing Date :NA

(71)**Name of Applicant :**
**1)JESUDIAN, Geoffrey Gnana Jeba**
Address of Applicant :9, Shenbagam Nagar, Palayamkottai, Tirunelveli 627002, Tamilnadu, India.
**2)C Vijaya**
**3)KAUR, Indu Pal**
(72)**Name of Inventor :**
**1)JESUDIAN, Geoffrey Gnana Jeba**
**2)C Vijaya**
**3)KAUR, Indu Pal**

(57) Abstract :
The present invention relates to a drug delivery system comprising solid lipid nanoparticles (SLNs) wherein the solid lipid nanoparticles comprise a therapeutically effective amount of Tazarotene or it pharmaceutically acceptable salts, one or more lipid(s) and surfactant(s) along with one or more pharmaceutically acceptable excipients. The present invention also relates to a pharmaceutical composition comprising this delivery system and a process for the preparation of such composition thereof.

No. of Pages : 41 No. of Claims : 15

(12) PATENT APPLICATION PUBLICATION
(21) Application No.4160/CHENP/2014 A
(19) INDIA
(22) Date of filing of Application :04/06/2014
(43) Publication Date : 17/07/2015

(54) Title of the invention : STEREOSELECTIVE TOTAL SYNTHESIS OF NORIBOGAINE

(51) International classification :C07D487/22
(31) Priority Document No :61/568568
(32) Priority Date :08/12/2011
(33) Name of priority country :U.S.A.
(86) International Application No :PCT/US2012/067629
Filing Date :03/12/2012
(87) International Publication No :WO 2013/085850
(61) Patent of Addition to Application Number :NA
Filing Date :NA
(62) Divisional to Application Number :NA
Filing Date :NA

(71)**Name of Applicant :**
**1)DEMERX INC.**
Address of Applicant :305 South Andrews Avenue Suite 515 Fort Lauderdale FL 33301 U.S.A.
(72)**Name of Inventor :**
**1)MORIARTY Robert M.**
**2)MASH Deborah C.**

(57) Abstract :
This invention relates generally to methods for synthesizing the non addictive alkaloid noribogaine.

No. of Pages : 35 No. of Claims : 14

(12) PATENT APPLICATION PUBLICATION
(19) INDIA
(22) Date of filing of Application :04/06/2014
(21) Application No.4161/CHENP/2014 A
(43) Publication Date : 17/07/2015

(54) Title of the invention : PROCESS AND APPARATUS FOR GAS ENRICHING A LIQUID

(51) International classification :B01F3/04,B01F3/08,C02F3/12
(31) Priority Document No :61/558260
(32) Priority Date :10/11/2011
(33) Name of priority country :U.S.A.
(86) International Application No :PCT/US2012/064663
Filing Date :12/11/2012
(87) International Publication No :WO 2013/071229
(61) Patent of Addition to Application Number :NA
Filing Date :NA
(62) Divisional to Application Number :NA
Filing Date :NA

(71)**Name of Applicant :**
**1)BLISSFIELD MANUFACTURING COMPANY**
Address of Applicant :626 Depot Street Blissfield MI 49228 U.S.A.
(72)**Name of Inventor :**
**1)CONRAD Mark A.**
**2)EPPINK Bruce A.**
**3)GOLBA Mark J.**

(57) Abstract :
Methods and apparatuses are described for enriching a first liquid with a gas and introducing the gas enriched first liquid into a second liquid. In an embodiment the apparatus (10) comprises a vessel (12) containing the gas at an elevated pressure a liquid fluid inlet (14) into the vessel (12) such that the first liquid enters the vessel and becomes enriched with the gas a variable internal valve (18) defining an opening through which the gas enriched first liquid flows after exiting the vessel (12) the internal valve opening adapted to generate bubbles of the gas within the gas enriched first liquid as the gas enriched first liquid flows therethrough and a tube (22) through which the gas enriched first liquid flows into the second liquid the tube (22) comprising an inlet section (24) comprising an inlet (26) a coiled section (28) fluidically coupled to the inlet section (24) an outlet section (30) fluidically coupled to the coiled section (28) and an outlet (32) fluidically coupled to the outlet section (30) the tube (22) adapted to maintain the bubbles of the oxygen containing gas generated within the gas enriched first liquid by the valve means (18).

No. of Pages : 13 No. of Claims : 20

(12) PATENT APPLICATION PUBLICATION
(19) INDIA
(22) Date of filing of Application :04/06/2014
(21) Application No.4162/CHENP/2014 A
(43) Publication Date : 17/07/2015

(54) Title of the invention : SURFACING FILM FOR COMPOSITE STRUCTURES AND METHOD OF MAKING THE SAME

(51) International classification :C08G59/18,C08G59/32,C08G59/40
(31) Priority Document No :61/569129
(32) Priority Date :09/12/2011
(33) Name of priority country :U.S.A.
(86) International Application No :PCT/US2012/068058
Filing Date :06/12/2012
(87) International Publication No :WO 2013/086063
(61) Patent of Addition to Application Number :NA
Filing Date :NA
(62) Divisional to Application Number :NA
Filing Date :NA

(71)**Name of Applicant :**
**1)CYTEC TECHNOLOGY CORP.**
Address of Applicant :300 Delaware Avenue Wilmington DE 19801 U.S.A.
(72)**Name of Inventor :**
**1)SANG Junjie Jeffrey**
**2)KOHLI Dalip Kumar**

(57) Abstract :
A surfacing film is formed from a curable resin composition containing an epoxy novolac resin a tri functional or tetra functional epoxy resin ceramic microspheres an amine based curing agent particulate inorganic fillers; and a toughening component. The surfacing film exhibits high T and high cross linked density after curing as well as high resistance to paint stripper solutions. The surfacing film is suitable for co curing with fiber reinforced resin composite materials. The surfacing film may optionally contain electrically conductive additives to provide sufficient conductivity for lightning strike protection (LSP) or electromagnetic interference (EMI) shielding.

No. of Pages : 29 No. of Claims : 16

(12) PATENT APPLICATION PUBLICATION
(19) INDIA
(22) Date of filing of Application :19/07/2012
(21) Application No.1804/KOLNP/2012 A
(43) Publication Date : 17/07/2015

(54) Title of the invention : ORGANICALLY CHELATED MINERAL COMPOSITIONS AND METHODS THEREOF

(51) International classification :A23K1/175
(31) Priority Document No :61/289,295
(32) Priority Date :22/12/2009
(33) Name of priority country :U.S.A.
(86) International Application No :PCT/US2010/041848
Filing Date :13/07/2010
(87) International Publication No : NA
(61) Patent of Addition to Application Number :NA
Filing Date :NA
(62) Divisional to Application Number :NA
Filing Date :NA

(71)**Name of Applicant :**
**1)RALCO NUTRITION INC.**
Address of Applicant :1600 Hahn Road Marshall Minnesota 56258 U.S.A.
(72)**Name of Inventor :**
**1)KNOCHENMUS Brian Jon**
**2)KNOCHENMUS Jon Kent**
**3)LAMB Richard Dale**
**4)LAMB Myrra Arlene**

(57) Abstract :
Embodiments of the invention relate to a method of making a mineral product. The method includes contacting a carboxylic acid and an inorganic mineral compound sufficient to form a solution, reacting the solution over a period of time sufficient to provide a mineral chelated compound, transferring the mineral chelated compound to one or more molds prior to the compound substantially solidifying and reducing the size of the mineral chelated compound sufficient to provide a rapidly soluble mineral chelated product.

No. of Pages : 54 No. of Claims : 36

(12) PATENT APPLICATION PUBLICATION
(19) INDIA
(22) Date of filing of Application :19/02/2015
(21) Application No.435/KOLNP/2015 A
(43) Publication Date : 17/07/2015

(54) Title of the invention : METHOD FOR REMOVING SULPHATE, CALCIUM AND/OR OTHER SOLUBLE METALS FROM WASTE WATER

(51) International classification :C02F1/52,C02F1/58,C02F103/10
(31) Priority Document No :20125884
(32) Priority Date :27/08/2012
(33) Name of priority country :Finland
(86) International Application No :PCT/FI2013/050816
Filing Date :22/08/2013
(87) International Publication No :WO 2014/033361
(61) Patent of Addition to Application Number :NA
Filing Date :NA
(62) Divisional to Application Number :NA
Filing Date :NA

(71)**Name of Applicant :**
**1)OUTOTEC (FINLAND) OY**
Address of Applicant :Rauhalanpuisto 9 FI-02230 Espoo Finland
(72)**Name of Inventor :**
**1)NEVATALO, Laura**
**2)VAN DER MEER, Tuomas**
**3)KERSTIENS, Bernd**

(57) Abstract :
The invention relates to a method and apparatus for re-moving sulphate, calcium and/or soluble metals from waste water, which method comprises the following steps a) a gypsum precipitation step b) an ettringite precipitation step,c) a first separation step, d) a neutralisation step and e) a second separation step in order to obtain water having a reduced sulphate, calcium and/or soluble metals content. The waste water is process water, effluent or sulphate containing water, such as mine water, recycle water from concentrator or discharge water from concentrator.

No. of Pages : 36 No. of Claims : 28

(12) PATENT APPLICATION PUBLICATION
(21) Application No.467/KOLNP/2015 A
(19) INDIA
(22) Date of filing of Application :23/02/2015
(43) Publication Date : 17/07/2015

(54) Title of the invention : COMMUNICATION SERVER, COMMUNICATION SYSTEM, PROGRAM, AND COMMUNICATION METHOD

(51) International classification :H04M3/56,G06F13/00,H04N7/15
(31) Priority Document No :2012-200912
(32) Priority Date :12/09/2012
(33) Name of priority country :Japan
(86) International Application No :PCT/JP2013/075210
Filing Date :11/09/2013
(87) International Publication No :WO 2014/042278
(61) Patent of Addition to Application Number :NA
Filing Date :NA
(62) Divisional to Application Number :NA
Filing Date :NA

(71)**Name of Applicant :**
**1)RICOH COMPANY, LTD.**
Address of Applicant :3-6, Nakamagome 1-chome, Ohta-ku, Tokyo, 1438555 Japan
(72)**Name of Inventor :**
**1)MIHARA, Akihiro**
**2)ASAI, Takahiro**

(57) Abstract :
A communication server includes a terminal management unit managing data identifying each of a plurality of communication terminals in association with group identification data identifying a group to which the communication terminals belong; a determination unit determining when a session for transmitting and receiving content data is established between first and second communication terminals whether group identification information sets of the first and the second communication terminals associated with the session are the same as each other based on the group identification data; and a report unit reporting when the group identification information sets of the first and the second communication terminals are the same as each other shared location information indicating a location of a shared memory area shared between the first and the second communication terminals to the first and the second communication terminals associated with the session while the session is being established.

No. of Pages : 88 No. of Claims : 8

(12) PATENT APPLICATION PUBLICATION
(19) INDIA
(22) Date of filing of Application :03/03/2015
(21) Application No.552/KOLNP/2015 A
(43) Publication Date : 17/07/2015

(54) Title of the invention : METHOD FOR CHECKING A VALUE DOCUMENT, VALUE DOCUMENT, USE THEREOF AND VALUE DOCUMENT SYSTEM

(51) International classification :G07D7/00,B42D15/00,G07D7/12
(31) Priority Document No :10 2012 019 247.9
(32) Priority Date :28/09/2012
(33) Name of priority country :Germany
(86) International Application No :PCT/EP2013/002919
Filing Date :27/09/2013
(87) International Publication No :WO 2014/048578
(61) Patent of Addition to Application Number :NA
Filing Date :NA
(62) Divisional to Application Number :NA
Filing Date :NA

(71)**Name of Applicant :**
**1)GIESECKE & DEVRIENT GMBH**
Address of Applicant :Prinzregentenstrasse 159, 81677 München Germany
(72)**Name of Inventor :**
**1)GIERING, Thomas**
**2)KECHT, Johann**
**3)RAUSCHER, Wolfgang**
**4)STEINLEIN, Stephan**

(57) Abstract :
The invention relates to a method for checking a value document, especially the authenticity and/or the nominal value of a value document having characteristic luminescent substances, the method comprising the steps of: a1) carrying out a location-specific measurement of first luminescence intensities (L1) at a first emission wavelength in different locations of the value document having the location coordinates (O), to thereby obtain pairs of measured values (O/L1); b1) statistically analyzing the first luminescence intensities (L1) measured on the basis of the individual location coordinates (O), by determining at least one statistical parameter by way of a statistical method; and c1) comparing the statistical parameter determined in step b1) to one or more threshold values.

No. of Pages : 69 No. of Claims : 15

(12) PATENT APPLICATION PUBLICATION
(19) INDIA
(22) Date of filing of Application :03/03/2015
(21) Application No.553/KOLNP/2015 A
(43) Publication Date : 17/07/2015

(54) Title of the invention : PLATE-GLASS PACKING DEVICE

(51) International classification :B65G49/06
(31) Priority Document No :NA
(32) Priority Date :NA
(33) Name of priority country :NA
(86) International Application No :PCT/JP2012/005100
Filing Date :10/08/2012
(87) International Publication No :WO 2014/024229
(61) Patent of Addition to Application Number :NA
Filing Date :NA
(62) Divisional to Application Number :NA
Filing Date :NA

(71)**Name of Applicant :**
**1)KAWASAKI JUKOGYO KABUSHIKI KAISHA**
Address of Applicant :1-1, Higashikawasaki-cho 3-chome, Chuo-ku, Kobe-shi, Hyogo 650-8670 Japan
(72)**Name of Inventor :**
**1)KIRITOSHI, Takanori**
**2)IKE, Hideaki**
**3)TSUJITA, Keiji**

(57) Abstract :
A plate-glass packing device (10) equipped with a positioning section (14) where a sheet (12) is positioned a sheet supply device (35) for supplying the sheet (12) to the positioning section (14) and a conveyance device (34) for overlaying a plate glass (16) from above onto the sheet (12) positioned in the positioning section (14) and conveying the sheet (12) and the plate glass (16) away from the positioning section (14) wherein the conveyance device (34) has: an overlay mechanism for overlaying the plate glass (16) onto the sheet (12) from above in a manner such that portions of the sheet (12) extend beyond both end sections of the plate glass (16) in a prescribed reference direction; a plate glass adsorption mechanism for adsorbing the plate glass (16) from above by using negative pressure; and a sheet adsorption mechanism for adsorbing the two extending portions of the sheet (12) which extend outward from both end sections of the plate glass (16) from above by using negative pressure.

No. of Pages : 34 No. of Claims : 12

(12) PATENT APPLICATION PUBLICATION
(19) INDIA
(22) Date of filing of Application :18/02/2015
(21) Application No.413/KOLNP/2015 A
(43) Publication Date : 17/07/2015

(54) Title of the invention : FOLDABLE STEP FOR CONSTRUCTION VEHICLE AND CONSTRUCTION VEHICLE PROVIDED WITH SUCH A STEP.

(51) International classification :B60R3/02,B62D25/22
(31) Priority Document No :000
(32) Priority Date :01/06/2012
(33) Name of priority country :
(86) International Application No :PCT/KR2012/006862
Filing Date :28/08/2012
(87) International Publication No :WO 2014/034973
(61) Patent of Addition to Application Number :NA
Filing Date :NA
(62) Divisional to Application Number :NA
Filing Date :NA

(71)**Name of Applicant :**
**1)VOLVO CONSTRUCTION EQUIPMENT AB**
Address of Applicant :SE-631 85 Eskilstuna Sweden
(72)**Name of Inventor :**
**1)THIYAGARAJAN, Ramkumar**
**2)J, Christian**
**3)AZIZ, Shihab**

(57) Abstract :
The disclosure is about a foldable step for a construction vehicle, including a support fixed to the vehicle, a linkage connected rotationally with the support through a first rotation axis and a foot plate connected rotationally with the linkage through a second rotation axis. The foot plate is closer to the left side of the vehicle as the foot plate rotates in one direction and to the right side of the vehicle as the foot plate rotates in the other direction. Accordingly, the total length of the construction vehicle can be reduced without any removal of the step from the vehicle. Further the step can provide an increased serviceable area capable of inspecting the engine of the vehicle.

No. of Pages : 28 No. of Claims : 21

(12) PATENT APPLICATION PUBLICATION
(21) Application No.511/KOLNP/2015 A
(19) INDIA
(22) Date of filing of Application :27/02/2015
(43) Publication Date : 17/07/2015

(54) Title of the invention : COKE PLANT INCLUDING EXHAUST GAS SHARING

(51) International classification :C10B5/14,C10B5/16,C10B5/20
(31) Priority Document No :13/588,996
(32) Priority Date :17/08/2012
(33) Name of priority country :U.S.A.
(86) International Application No :PCT/US2013/054711
Filing Date :13/08/2013
(87) International Publication No :WO 2014/028476
(61) Patent of Addition to Application Number :NA
Filing Date :NA
(62) Divisional to Application Number :NA
Filing Date :NA

(71)**Name of Applicant :**
**1)SUNCOKE TECHNOLOGY AND DEVELOPMENT LLC**
Address of Applicant :1011 Warrenville Road 6th Floor, Lisle, Illinois 60532 U.S.A.
(72)**Name of Inventor :**
**1)QUANCI, John F.**
**2)CHUN, Peter**
**3)KAPLAREVIC, Milos**
**4)REILING, Vince**

(57) Abstract :
A coke plant includes multiple coke ovens where each coke oven is adapted to produce exhaust gases a common tunnel fluidly connected to the plurality of coke ovens and configured to receive the exhaust gases from each of the coke ovens multiple standard heat recovery steam generators fluidly connected to the common tunnel where the ratio of coke ovens to standard heat recovery steam generators is at least 20:1 and a redundant heat recovery steam generator fluidly connected to the common tunnel where any one of the plurality of standard heat recovery steam generators and the redundant heat recovery steam generator is adapted to receive the exhaust gases from the plurality of ovens and extract heat from the exhaust gases and where the standard heat recovery steam generators and the redundant heat recovery steam generator are all connected in parallel with each other.

No. of Pages : 48 No. of Claims : 53

(12) PATENT APPLICATION PUBLICATION
(19) INDIA
(22) Date of filing of Application :27/02/2015
(21) Application No.512/KOLNP/2015 A
(43) Publication Date : 17/07/2015

(54) Title of the invention : HORIZONTAL HEAT RECOVERY COKE OVENS HAVING MONOLITH CROWNS

(51) International classification :C10B21/00,C10B29/00
(31) Priority Document No :13/829,588
(32) Priority Date :14/03/2013
(33) Name of priority country :U.S.A.
(86) International Application No :PCT/US2014/028837
Filing Date :14/03/2014
(87) International Publication No :WO 2014/153050
(61) Patent of Addition to Application Number :NA
Filing Date :NA
(62) Divisional to Application Number :NA
Filing Date :NA

(71)**Name of Applicant :**
**1)SUNCOKE TECHNOLOGY AND DEVELOPMENT, LLC**
Address of Applicant :1011 Warrenville Road 6th Floor, Lisle, Illinois 60532 U.S.A.
(72)**Name of Inventor :**
**1)WEST, Gary Dean**
**2)QUANCI, John Francis**

(57) Abstract :
The present technology is generally directed to horizontal heat recovery coke ovens having monolith crowns. In some embodiments an HHR coke oven includes a monolith crown that spans the width of the oven between opposing oven sidewalls. The monolith expands upon heating and contracts upon cooling as a single structure. In further embodiments the crown comprises a thermally volume stable material. In various embodiments the monolith and thermally volume stable features can be used in combination or alone. These designs can allow the oven to be turned down below traditionally feasible temperatures while maintaining the structural integrity of the crown.

No. of Pages : 34 No. of Claims : 27

(12) PATENT APPLICATION PUBLICATION
(19) INDIA
(22) Date of filing of Application :04/03/2015
(21) Application No.570/KOLNP/2015 A
(43) Publication Date : 17/07/2015

(54) Title of the invention : METHODS AND SYSTEMS FOR IMPROVED QUENCH TOWER DESIGN

(51) International classification :C10B39/08,C10B39/12
(31) Priority Document No :13/843,166
(32) Priority Date :15/03/2013
(33) Name of priority country :U.S.A.
(86) International Application No :PCT/US2014/028437
Filing Date :14/03/2014
(87) International Publication No :WO 2014/144149
(61) Patent of Addition to Application Number :NA
Filing Date :NA
(62) Divisional to Application Number :NA
Filing Date :NA

(71)**Name of Applicant :**
**1)SUNCOKE TECHNOLOGY AND DEVELOPMENT, LLC**
Address of Applicant :1011 Warrenville Road 6th Floor Lisle, Illinois 60532 U.S.A.
(72)**Name of Inventor :**
**1)CHOI, Chun Wai**
**2)KAPOOR, Rajat**
**3)QUANCI, John Francis**

(57) Abstract :
The present technology describes methods and systems for an improved quench tower. Some embodiments improve the quench towers ability to recover particulate matter, steam, and emissions that escape from the base of the quench tower. Some embodiments improve the draft and draft distribution of the quench tower. Some embodiments include one or more sheds to enlarge the physical or effective perimeter of the quench tower to reduce the amount of particulate matter, emissions, and steam loss during the quenching process. Some embodiments include an improved quench baffle formed of a plurality of single turn or multi-turn chevrons adapted to prevent particulate matter from escaping the quench tower. Some embodiments include an improved quench baffle spray nozzle used to wet the baffles, suppress dust, and/or clean baffles. Some embodiments include a quench nozzle that can fire in discrete stages during the quenching process.

No. of Pages : 60 No. of Claims : 86

(12) PATENT APPLICATION PUBLICATION
(19) INDIA
(22) Date of filing of Application :20/02/2015

(21) Application No.454/KOLNP/2015 A
(43) Publication Date : 17/07/2015

(54) Title of the invention : FILTER PLATE

| | |
|---|---|
| (51) International classification | :B01D25/12,B01D25/28,B01D35/143 |
| (31) Priority Document No | :NA |
| (32) Priority Date | :NA |
| (33) Name of priority country | :NA |
| (86) International Application No | :PCT/EP2012/068349 |
| Filing Date | :18/09/2012 |
| (87) International Publication No | :WO 2014/044294 |
| (61) Patent of Addition to Application Number | :NA |
| Filing Date | :NA |
| (62) Divisional to Application Number | :NA |
| Filing Date | :NA |

(71)**Name of Applicant :**
**1)OUTOTEC (FINLAND) OY**
Address of Applicant :Rauhalanpuisto 9 02230 Espoo Finland
(72)**Name of Inventor :**
**1)PALMER, Jason**

(57) Abstract :
The invention relates to a filter plate (6) for use in a filtering device, the filter plate (6) comprising a cavity (2), a moveable membrane (3) disposed over the cavity (2), thereby forming a squeezing chamber defined by the cavity (2) and the membrane (3), and a first port (4) adapted to co-operate with a corresponding port of an adjacent filter plate (6) to form a common pressurizing channel, the pressurizing channel being in communication with the squeezing chamber via a pressurizing conduit (5). According to the invention it is suggested to provide a second port (7) adapted to co-operate with a corresponding port of the adjacent filter plate (6) to form a common actuating channel and a collapsible sleeve (8) responsive to a pressure increase in the actuating channel, the sleeve (8) being disposed in the second port (7) and forming a part of the pressurizing conduit (5).

No. of Pages : 12 No. of Claims : 8

(12) PATENT APPLICATION PUBLICATION
(21) Application No.489/KOLNP/2015 A
(19) INDIA
(22) Date of filing of Application :25/02/2015
(43) Publication Date : 17/07/2015

(54) Title of the invention : IN-VEHICLE IMAGE RECOGNIZER

| | |
|---|---|
| (51) International classification | :H04N5/225,B60R1/00,G06T1/00 |
| (31) Priority Document No | :2012-167702 |
| (32) Priority Date | :27/07/2012 |
| (33) Name of priority country | :Japan |
| (86) International Application No | :PCT/JP2013/069667 |
| Filing Date | :19/07/2013 |
| (87) International Publication No | :WO 2014/017403 |
| (61) Patent of Addition to Application Number | :NA |
| Filing Date | :NA |
| (62) Divisional to Application Number | :NA |
| Filing Date | :NA |

(71)**Name of Applicant :**
**1)CLARION CO., LTD.**
Address of Applicant :7-2, Shintoshin, Chuo-ku, Saitama-shi, Saitama 3300081, Japan
**2)NISSAN MOTOR CO., LTD.**
(72)**Name of Inventor :**
**1)Kota IRIE**
**2)Masayuki TAKEMURA**
**3)Shoji MURAMATSU**
**4)Yasuhisa HAYAKAWA**
**5)Osamu FUKATA**
**6)Masahiro KIYOHARA**
**7)Akira UTAGAWA**

(57) Abstract :
This vehicle-mounted image recognition device reliably detects moving bodies from the captured images even when the lens is dirty. An image capturing unit (10) arranged in the local vehicle (5) observes the periphery of the local vehicle (5) through a lens (12) and converts to an image signal the optical signal of the observed periphery of the local vehicle (5). From the images captured by the image capturing unit (10), a vehicle detection unit (70) (image recognition application execution unit) detects other vehicles (6) (moving bodies) present in the periphery of the local vehicle (5) with a prescribed detection sensitivity. Depending on how high the white turbidity (U) is, a detection sensitivity adjustment unit (50) adjusts the detection sensitivity of the vehicle detection unit (70) in the direction for improving the detection sensitivity. An adhesion degree calculation unit (26) calculates the adhesion degree (M) of adhering matter such as water droplets or mud adhering to the lens (12), and corrections are made on the basis of said adhesion degree (M) in said detection sensitivity adjustment unit (50).

No. of Pages : 90 No. of Claims : 7

(12) PATENT APPLICATION PUBLICATION
(19) INDIA
(22) Date of filing of Application :09/03/2015
(21) Application No.593/KOLNP/2015 A
(43) Publication Date : 17/07/2015

(54) Title of the invention : DISC BRAKE PAD MOUNTING AND RETENTION SYSTEM AND METHOD

(51) International classification :F16D55/00
(31) Priority Document No :13/588,527
(32) Priority Date :17/08/2012
(33) Name of priority country :U.S.A.
(86) International Application No :PCT/US2013/054678
Filing Date :13/08/2013
(87) International Publication No :WO 2014/028454
(61) Patent of Addition to Application Number :NA
Filing Date :NA
(62) Divisional to Application Number :NA
Filing Date :NA

(71)**Name of Applicant :**
**1)BENDIX SPICER FOUNDATION BRAKE LLC**
Address of Applicant :901 Cleveland Street, Elyria, OH 44035 U.S.A.
(72)**Name of Inventor :**
**1)PLANTAN, Ronald, S.**
**2)RADHAKRISHNAN, Harish**
**3)WOLF, Dennis, A.**
**4)LANTZ, Richard, L.**
**5)ROBERTS, Will, E.**
**6)BELL, Steven, C.**

(57) Abstract :
A system and method are provided for mounting, removing and retaining brake pads in disc brakes, such as air-operated-disc brakes utilized on commercial vehicles, in a manner which does not require the use of separate brake pad retaining devices while providing positive retention of the brake pad. A preferred embodiment includes a brake caliper mount having brake pad abutment surfaces having radially oriented and lateral grooves which permit a brake pad with corresponding projections on is lateral sides to be inserted through an opening of the brake caliper into the radially oriented grooves until the backing plate projections are aligned with the lateral groove, and advancing the brake actuator behind the brake pad to place the brake pad in an operating position in which the actuator prevents the brake pad from realigning with the radially oriented grooves until the actuator is retracted to permit brake pad extraction.

No. of Pages : 32 No. of Claims : 15

(12) PATENT APPLICATION PUBLICATION
(19) INDIA
(22) Date of filing of Application :09/03/2015
(21) Application No.594/KOLNP/2015 A
(43) Publication Date : 17/07/2015

(54) Title of the invention : DISC BRAKE PAD MOUNTING AND RETENTION SYSTEM AND METHOD

(51) International classification :F16D65/095
(31) Priority Document No :13/588,559
(32) Priority Date :17/08/2012
(33) Name of priority country :U.S.A.
(86) International Application No :PCT/US2013/054679
Filing Date :13/08/2013
(87) International Publication No :WO 2014/028455
(61) Patent of Addition to Application Number :NA
Filing Date :NA
(62) Divisional to Application Number :NA
Filing Date :NA

(71)**Name of Applicant :**
**1)BENDIX SPICER FOUNDATION BRAKE LLC**
Address of Applicant :901 Cleveland Street, Elyria, OH 44035 U.S.A.
(72)**Name of Inventor :**
**1)PLANTAN, Ronald, S.**
**2)RADHAKRISHNAN, Harish**
**3)WOLF, Dennis, A.**
**4)LANTZ, Richard, L.**
**5)ROBERTS, Will, E.**
**6)BELL, Steven, C.**

(57) Abstract :
A system and method are provided for mounting removing and retaining brake pads in disc brakes such as air operated disc brakes utilized on commercial vehicles in a manner which does not require the use of separate brake pad retaining devices while providing positive retention of the brake pad. A preferred embodiment includes a brake caliper mount having brake pad abutment surfaces having radially oriented and lateral grooves which permit a brake pad with corresponding projections on is lateral sides to be inserted through an opening of the brake caliper into the radially oriented grooves until the backing plate projections are aligned with the lateral groove and advancing the brake actuator behind the brake pad to place the brake pad in an operating position in which the actuator prevents the brake pad from realigning with the radially oriented grooves until the actuator is retracted to permit brake pad extraction.

No. of Pages : 31 No. of Claims : 14

(12) PATENT APPLICATION PUBLICATION
(19) INDIA
(22) Date of filing of Application :16/02/2015
(21) Application No.400/KOLNP/2015 A
(43) Publication Date : 17/07/2015

(54) Title of the invention : DC BUILDING SYSTEM WITH ENERGY STORAGE AND CONTROL SYSTEM

(51) International classification :H02J3/38,H02J3/14,H02J1/00
(31) Priority Document No :61/684,083
(32) Priority Date :16/08/2012
(33) Name of priority country :U.S.A.
(86) International Application No :PCT/IB2013/002245
Filing Date :16/08/2013
(87) International Publication No :WO 2014/027246
(61) Patent of Addition to Application Number :NA
Filing Date :NA
(62) Divisional to Application Number :NA
Filing Date :NA

(71)**Name of Applicant :**
**1)ROBERT BOSCH GMBH**
Address of Applicant :Postfach 30 02 20, 70442 Stuttgart Germany
(72)**Name of Inventor :**
**1)SAUSSELE, John**
**2)STEINIG, Oliver, Norbert**

(57) Abstract :
A DC building electrical system includes a DC power consuming device connected to a DC bus. A source of DC power is connected to the DC bus and powers the DC power consuming device. An energy storage device is connected to the DC bus and to a DC emergency load. The energy storage device powers the DC power consuming device in conjunction with the source of DC power and powers the DC emergency load when source of power other than the energy storage device is available to the DC power consuming device.

No. of Pages : 42 No. of Claims : 22

(12) PATENT APPLICATION PUBLICATION
(21) Application No.43/KOL/2014 A
(19) INDIA
(22) Date of filing of Application :10/01/2014
(43) Publication Date : 17/07/2015

(54) Title of the invention : SYNERGISTIC COMBINATION OF HERBAL EXTRACTS FOR PERSONAL CARE COMPOSITIONS

| | |
|---|---|
| (51) International classification | :A61K 36/00 |
| (31) Priority Document No | :NA |
| (32) Priority Date | :NA |
| (33) Name of priority country | :NA |
| (86) International Application No | :NA |
| Filing Date | :NA |
| (87) International Publication No | : NA |
| (61) Patent of Addition to Application Number | :NA |
| Filing Date | :NA |
| (62) Divisional to Application Number | :NA |
| Filing Date | :NA |

(71)**Name of Applicant :**
**1)ITC LIMITED**
Address of Applicant :37, J.L.NEHRU ROAD, KOLKATA-700 071, West Bengal India
(72)**Name of Inventor :**
**1)SHIVAPRASAD, MANJULA TARIKERE**
**2)SUBRAMANYAM, GAYATHRI**
**3)BHASKAR, JAMES PRABHANAND**

(57) Abstract :
A cosmetic composition comprising aqueous extracts of Tecomellaundulata and Cephalandraindica; and cosmetically acceptable excipients; wherein said extracts are present in a ratio of about 1:1. Thecombination of extracts present in an amount of 10 ppm to 1000 ppmprovides enhanced collagen induction and enhanced protection against free radicals. Also provided is the process for preparation of the said cosmetic composition.

No. of Pages : 28 No. of Claims : 9

(12) PATENT APPLICATION PUBLICATION
(19) INDIA
(22) Date of filing of Application :02/03/2015
(21) Application No.537/KOLNP/2015 A
(43) Publication Date : 17/07/2015

(54) Title of the invention : METHOD AND APPARATUS FOR TREATING A FLUID CONTAINING IONISED PARTICLES

(51) International classification :C02F1/469
(31) Priority Document No :PD2012A000239
(32) Priority Date :02/08/2012
(33) Name of priority country :Italy
(86) International Application No :PCT/IB2013/001700
Filing Date :30/07/2013
(87) International Publication No :WO 2014/020422
(61) Patent of Addition to Application Number :NA
Filing Date :NA
(62) Divisional to Application Number :NA
Filing Date :NA

(71)**Name of Applicant :**
**1)IDROPAN DELL'ORTO DEPURATORI S.R.L.**
Address of Applicant :Via Valassina, 19, I-20159 Milano Italy
(72)**Name of Inventor :**
**1)SERVIDA, Tullio**

(57) Abstract :
Method for treating a fluid containing ionized particles, by means of an apparatus provided with a hydraulic circuit (100) intercepted by an immiscible storage tank and by a cyclically regenerating filtering unit (3, 3 A, 3B) connected in parallel to the tank. The following are provided for: a supply pipe connected to the hydraulic circuit (100) upstream of the immiscible storage tank for introducing fluid to be purified and an extraction pipe (9) connected to the hydraulic circuit (100) downstream of the filtering unit (3, 3 A, 3B) for conveying purified fluid to the user. The method cyclically comprises a circulation step, in which the fluid circulates through the filtering unit (3, 3 A, 3B) and the immiscible tank (2) accumulating in the latter an operating amount of fluid with increasing concentration of ionized particles, and a production step in which an operating amount of fluid to be purified is introduced into the hydraulic circuit (100) by the supply pipe such that an equivalent operating amount of fluid with increasing concentration of ionized particles previously accumulated in the tank is forced to exit from the tank itself and pass through the filtering unit (3, 3 A, 3B) in order to be further purified and then drawn by the extraction pipe (9).

No. of Pages : 56 No. of Claims : 22

(12) PATENT APPLICATION PUBLICATION
(21) Application No.538/KOLNP/2015 A
(19) INDIA
(22) Date of filing of Application :02/03/2015
(43) Publication Date : 17/07/2015

(54) Title of the invention : MAGNETIC REMOVAL OR IDENTIFICATION OF DAMAGED OR COMPROMISED CELLS OR CELLULAR STRUCTURES

(51) International classification :B03C1/00
(31) Priority Document No :61/694,756
(32) Priority Date :29/08/2012
(33) Name of priority country :U.S.A.
(86) International Application No :PCT/US2013/056526
Filing Date :23/08/2013
(87) International Publication No :WO 2014/035840
(61) Patent of Addition to Application Number :NA
Filing Date :NA
(62) Divisional to Application Number :NA
Filing Date :NA

(71)**Name of Applicant :**
**1)INGURAN, LLC.**
Address of Applicant :22575 State Hwy 6 South Navasota, TX 77868 U.S.A.
(72)**Name of Inventor :**
**1)KRUG, Kristie, Marie**

(57) Abstract :
A method for magnetic cellular manipulation may include contacting a composition with a biological sample to form a mixture. The composition may include a plurality of particles. Each particle in the plurality of particles may include a magnetic substrate. The magnetic substrate may be characterized by a magnetic susceptibility greater than zero. The composition may also include a chargeable silicon-containing compound. The chargeable silicon-containing compound may coat at least a portion of the magnetic substrate. The biological sample may include cells and/or cellular structures. The method may also include applying a magnetic field to the mixture to manipulate the composition.

No. of Pages : 55 No. of Claims : 20

(12) PATENT APPLICATION PUBLICATION
(19) INDIA
(22) Date of filing of Application :09/03/2015
(21) Application No.601/KOLNP/2015 A
(43) Publication Date : 17/07/2015

(54) Title of the invention : INTERLEAVED 12-PULSE RECTIFIER

(51) International classification :H02M7/08,H02M7/06,H02M1/14
(31) Priority Document No :61/697,035
(32) Priority Date :05/09/2012
(33) Name of priority country :U.S.A.
(86) International Application No :PCT/US2013/058138
Filing Date :05/09/2013
(87) International Publication No :WO 2014/039606
(61) Patent of Addition to Application Number :NA
Filing Date :NA
(62) Divisional to Application Number :NA
Filing Date :NA

(71)**Name of Applicant :**
**1)ABB TECHNOLOGY AG**
Address of Applicant :Affolternstrasse 44, CH-8050 Zurich Switzerland
(72)**Name of Inventor :**
**1)BURGOS, Rolando**

(57) Abstract :
Among other things, one or more techniques and/or systems are provided for converting a three-phase AC voltage to a 12-pulse DC voltage, drawing a 12-pulse AC current from a three phase network. A rectifier (200,336,436,536,636) may comprise a first interleaved phase leg (202,326,426,526,626), a second interleaved phase, leg (204,328,428,528,628), and/or a third interleaved phase leg (206,330,430,530,630). Respective interleaved phase legs may comprise positive portions configured to conduct positive current from a transformer towards a load, and negative portions configured to conduct negative current from the load back to the transformer. The rectifier may be configured to sequentially cycle respective interleaved phase legs into positive and/or negative 120 conducting states over a 360 degree cycle to output the 12-pulse DC voltage. For example, during a first 120 degree conducting state a positive portion of the first interleaved phase leg may conduct positive current towards the load, while a negative portion of a different phase leg may conduct negative current back to the transformer.

No. of Pages : 30 No. of Claims : 20

(12) PATENT APPLICATION PUBLICATION
(19) INDIA
(22) Date of filing of Application :25/02/2015

(21) Application No.492/KOLNP/2015 A
(43) Publication Date : 17/07/2015

(54) Title of the invention : ORGANIC COMPOUNDS

| | |
|---|---|
| (51) International classification | :C07H15/04,A61K31/7028,A61P3/10 |
| (31) Priority Document No | :601473 |
| (32) Priority Date | :26/07/2012 |
| (33) Name of priority country | :New Zealand |
| (86) International Application No | :PCT/NZ2013/000133 |
| Filing Date | :26/07/2013 |
| (87) International Publication No | :WO 2014/017928 |
| (61) Patent of Addition to Application Number | :NA |
| Filing Date | :NA |
| (62) Divisional to Application Number | :NA |
| Filing Date | :NA |

(71)**Name of Applicant :**
**1)CALLAGHAN INNOVATION RESEARCH LIMITED**
Address of Applicant :Gracefield Research Centre, 69 Gracefield Road, Lower Hutt, 5010 New Zealand
**2)COMPTON, Benjamin Jason**
**3)HAYMAN, Colin Malcolm**
**4)HERMANS, Ian Francis**
**5)LARSEN, David Samuel**
**6)PAINTER, Gavin Frank**
**7)ANDERSON, Regan James**
(72)**Name of Inventor :**
**1)COMPTON, Benjamin Jason**
**2)HAYMAN, Colin Malcolm**
**3)HERMANS, Ian Francis**
**4)LARSEN, David Samuel**
**5)PAINTER, Gavin Frank**
**6)ANDERSON, Regan James**

(57) Abstract :
This invention relates to sphingoglycolipid analogues, compositions comprising these compounds, processes for preparing the compounds, and methods of treating or preventing diseases or conditions using the compounds, such as diseases or conditions relating to infection atopic disorders, autoimmune disease, diabetes or cancer.

No. of Pages : 85 No. of Claims : 25

(12) PATENT APPLICATION PUBLICATION
(21) Application No.535/CAL/2000 A
(19) INDIA
(22) Date of filing of Application :18/09/2000
(43) Publication Date : 17/07/2015

(54) Title of the invention : A MODULAR PURE AIR UNIT DEVICE FOR FEEDING PURE AIR INTO CLEAN ROOMS HAVING PHARMACEUTICAL GROCERY AND BIOTECHNICAL PRODUCT

(51) International classification :F24F 3/16
(31) Priority Document No :29916321.0
(32) Priority Date :16/09/1999
(33) Name of priority country :Germany
(86) International Application No :NA
Filing Date :NA
(87) International Publication No : NA
(61) Patent of Addition to Application Number :NA
Filing Date :NA
(62) Divisional to Application Number :NA
Filing Date :NA

(71)**Name of Applicant :**
**1)M & W ZANDER FACILITY ENGINEERING GMBH**
Address of Applicant :LOTTERBERGSTR. 30, 70499 STUTTGART Germany
(72)**Name of Inventor :**
**1)RENZ MANFRED**

(57) Abstract :
The invention relates to a modular pure air unit device for feeding pura ar into clean rooms having pharmaceuticals, grocery and bio-technical products, the device comprising atieast one fan means (4, 4a, 4b, 4d); and atleast one beat transmitter (3,3a, 3b, 3d) operatively connected, and being disposed adjacent to the atlaast one fan means, the atleast one heat transmitter configured as a finned tube heat exchanger; the fan means (4, 4a, 4b, 4d) having atleast one filter (7,7a, 7b, 7d) through which pure air flowing into the clean rooms, the fan means (4,4a, 4b, 4d) drawing air from a fresh air chamber (5,5d) disposed in a region between the fen means and a ceiling (ft), e common housing (1, la, lb, 1d) is provided to accommodate the atlaast one fan means (4,4a, 4b, 4d), the atleast one filter (7, 7a, 7b, 7d), and the atlaast one heat transmitter (3,3a, 3b, 3d) to form a built-in-module so that the fresh air flowing through the atieast one filter (7) directly delivered to the clean rooms and the exiting air from the clean rooms being directly fed to the atleast one heat transmitter (3).

No. of Pages : 15 No. of Claims : 25

(12) PATENT APPLICATION PUBLICATION
(21) Application No.536/KOLNP/2015 A
(19) INDIA
(22) Date of filing of Application :02/03/2015
(43) Publication Date : 17/07/2015

(54) Title of the invention : PLUG PART FOR FORMING A PLUG CONNECTION

(51) International classification :H01R13/66,H01R13/639
(31) Priority Document No :01649/12
(32) Priority Date :10/09/2012
(33) Name of priority country :Switzerland
(86) International Application No :PCT/EP2013/068747
Filing Date :10/09/2013
(87) International Publication No :WO 2014/037586
(61) Patent of Addition to Application Number :NA
Filing Date :NA
(62) Divisional to Application Number :NA
Filing Date :NA

(71)**Name of Applicant :**
**1)SELECTRON SYSTEMS AG**
Address of Applicant :Bernstrasse 70, CH-3250 Lyss Switzerland
(72)**Name of Inventor :**
**1)GUT, Max**
**2)RIEDEL, Bernd**

(57) Abstract :
The invention relates to a plug part (10) that can be connected to a counter piece (1), which acts as a connector of an appliance (50), to form a plug connection. The plug part (10) comprises at least one non-volatile memory (13), a communication unit (15) and a microprocessor (14). A network having such plug parts (10) can be tested by means of a testing device which is designed to generate test signals from information stored in the memory (13), which test signals can be laid on the cable wired leading out of the plug part (10) in order to generate measurement signals. The memory (13) preferably contains a list of permissible combinations of hardware and software versions, which can be compared with the current hardware and software combination of the appliance (50) in order to configure the appliance (50) and/or authorise the appliance (50) for normal operation.

No. of Pages : 59 No. of Claims : 31

(12) PATENT APPLICATION PUBLICATION
(21) Application No.604/KOLNP/2015 A
(19) INDIA
(22) Date of filing of Application :09/03/2015
(43) Publication Date : 17/07/2015

(54) Title of the invention : PHOTOPOLYMERIZABLE COMPOSITION, PHOTOPOLYMERIZABLE INKJET INK, AND INK CARTRIDGE

(51) International classification :C08F2/44,B41J2/01,B41M5/00
(31) Priority Document No :2012-222728
(32) Priority Date :05/10/2012
(33) Name of priority country :Japan
(86) International Application No :PCT/JP2013/077012
Filing Date :27/09/2013
(87) International Publication No :WO 2014/054763
(61) Patent of Addition to Application Number :NA
Filing Date :NA
(62) Divisional to Application Number :NA
Filing Date :NA

(71)**Name of Applicant :**
**1)RICOH COMPANY, LTD.**
Address of Applicant :3-6, Nakamagome 1-chome, Ohta-ku, Tokyo, 1438555 Japan
(72)**Name of Inventor :**
**1)HIRAOKA, Takao**

(57) Abstract :
To provide a non-aqueous photopolymerizable composition, which contains: a polymerizable monomer; a polymerization initiator; and a polyether modified polysiloxane compound represented by the following general formula (1): <General Formula (1)>(CH3)3Si-O-[Si(CH3)2-O]a-[Si(CH3)(X)-O]b-Si(CH3)3 where X represents R(C2H4O)c(C3H6O)d-R,R is a single bond or an alkylene group, R is a hydrogen atom or an alkyl group, and a to d each denote an average polymerization degree including a case where either c or d is 0.

No. of Pages : 55 No. of Claims : 9

(12) PATENT APPLICATION PUBLICATION
(19) INDIA
(22) Date of filing of Application :09/03/2015
(21) Application No.605/KOLNP/2015 A
(43) Publication Date : 17/07/2015

(54) Title of the invention : PLATE GLASS INSPECTION UNIT AND MANUFACTURING FACILITY

(51) International classification :G01N21/896
(31) Priority Document No :NA
(32) Priority Date :NA
(33) Name of priority country :NA
(86) International Application No :PCT/JP2012/005145
Filing Date :13/08/2012
(87) International Publication No :WO 2014/027375
(61) Patent of Addition to Application Number :NA
Filing Date :NA
(62) Divisional to Application Number :NA
Filing Date :NA

(71)**Name of Applicant :**
**1)KAWASAKI JUKOGYO KABUSHIKI KAISHA**
Address of Applicant :1-1, Higashikawasaki-cho 3-chome, Chuo-ku, Kobe-shi, Hyogo 6508670 Japan
(72)**Name of Inventor :**
**1)KIRITOSHI, Takanori**
**2)SATO, Makoto**
**3)TSUJITA, Keiji**

(57) Abstract :
In the inspection unit (20) of an inspection device (100) according to the present invention plate glass (101) that has a molding direction is inspected while being transported downstream wherein a parallel edge inspection device (30) is disposed on the upstream or downstream side in relation to a rotation device (40), and an orthogonal edge inspection device (50), a surface inspection device (60), and a line inspection device (70) are disposed on the other side.

No. of Pages : 30 No. of Claims : 7

(12) PATENT APPLICATION PUBLICATION
(19) INDIA
(22) Date of filing of Application :20/02/2015
(21) Application No.455/KOLNP/2015 A
(43) Publication Date : 17/07/2015

(54) Title of the invention : SYSTEM AND METHOD FOR PROVIDING A SECURE COMPUTATIONAL ENVIRONMENT

(51) International classification :G06F21/57
(31) Priority Document No :61/684,743
(32) Priority Date :18/08/2012
(33) Name of priority country :U.S.A.
(86) International Application No :PCT/US2013/055449
Filing Date :16/08/2013
(87) International Publication No :WO 2014/031494
(61) Patent of Addition to Application Number :NA
Filing Date :NA
(62) Divisional to Application Number :NA
Filing Date :NA

(71)**Name of Applicant :**
**1)LUMINAL, INC.**
Address of Applicant :47 E. All Saints Street, Frederick, Maryland 21701 U.S.A.
(72)**Name of Inventor :**
**1)STELLA, Josha**
**2)ZIPPILLI, Dominic**
**3)BRINKMAN, Matthew**

(57) Abstract :
Approaches for providing a secure computational environment are disclosed. In certain implementations, a secure computational environment may be provided by: limiting exploitable or potentially exploitable sub components in software components; replacing software components with corresponding known good software components without regard to whether the software components have been compromised or potentially compromised; combining different information to be transmitted into different slices of a data packet and/or encrypting the slices using different cryptographic schemes; processing a data packet having data slices associated with different information that are encrypted using different cryptographic schemes; securing information using data packets having headers that start at different positions within a data packet with respect to other data packets; processing data packets having headers that start at different positions within a data packet with respect to other data packets; or utilizing other approaches.

No. of Pages : 108 No. of Claims : 80

(12) PATENT APPLICATION PUBLICATION
(21) Application No.591/KOLNP/2015 A
(19) INDIA
(22) Date of filing of Application :09/03/2015
(43) Publication Date : 17/07/2015

(54) Title of the invention : MOVEMENT SYSTEM FOR SUBMARINE-ATMOSPHERIC INTERFACE DEVICES

(51) International classification :B63G8/38
(31) Priority Document No :BO2012A000587
(32) Priority Date :26/10/2012
(33) Name of priority country :Italy
(86) International Application No :PCT/IB2013/059002
Filing Date :30/09/2013
(87) International Publication No :WO 2014/064559
(61) Patent of Addition to Application Number :NA
Filing Date :NA
(62) Divisional to Application Number :NA
Filing Date :NA

(71)**Name of Applicant :**
**1)CALZONI S.R.L.**
Address of Applicant :Via A. De Gasperi, 7, I-40012 Calderara Di Reno Italy
(72)**Name of Inventor :**
**1)BERTIN, Daniele, Maria**

(57) Abstract :
A movement system for submarine-atmospheric interface devices comprises fixed guides (4) integrally connected to a conning tower (103) of a submarine (100), a lifting apparatus (1) slidable in the fixed guides (4), at least one electric motor (5) for driving the lifting apparatus (1) and a motion transmission mechanism (6) whereby motion is transmitted from the electric motor (5) to the lifting apparatus (1) and comprising flexible transmission means (7).

No. of Pages : 26 No. of Claims : 14

(12) PATENT APPLICATION PUBLICATION
(21) Application No.592/KOLNP/2015 A
(19) INDIA
(22) Date of filing of Application :09/03/2015
(43) Publication Date : 17/07/2015

(54) Title of the invention : PHOTOPOLYMERIZABLE COMPOSITION, PHOTOPOLYMERIZABLE INKJET INK, AND INK CARTRIDGE

(51) International classification :C08F2/48,B41J2/01,B41M5/00
(31) Priority Document No :2012-215753
(32) Priority Date :28/09/2012
(33) Name of priority country :Japan
(86) International Application No :PCT/JP2013/075390
Filing Date :12/09/2013
(87) International Publication No :WO 2014/050711
(61) Patent of Addition to Application Number :NA
Filing Date :NA
(62) Divisional to Application Number :NA
Filing Date :NA

(71)**Name of Applicant :**
**1)RICOH COMPANY, LTD.**
Address of Applicant :3-6, Nakamagome 1-chome, Ohta-ku, Tokyo, 1438555 Japan
(72)**Name of Inventor :**
**1)HIRAOKA, Takao**

(57) Abstract :
To provide a non-aqueous photopolymerizable composition, which contains: a (meth)acrylic acid ester compound containing at least diethylene glycol dimethacrylate; a photoradical polymerization initiator, which is at least one selected from the group consisting of 1-hydroxy cyclohexyl-phenyl-ketone, 2-hydroxy-2-methyl-1 phenyl-propan-1-one, and 2-hydroxy-1-{4-[4-(2- hydroxy-2-methyl-propionyl)benzyl]phenyl}-2 -methyl-1-propan-1-one; and a triazine compound wherein an amount of the photoradical polymerization initiator is 10 parts by mass or greater relative to 100 parts by mass of the (meth)acrylic acid ester compound.

No. of Pages : 55 No. of Claims : 9

(12) PATENT APPLICATION PUBLICATION
(19) INDIA
(22) Date of filing of Application :12/03/2015
(21) Application No.655/KOLNP/2015 A
(43) Publication Date : 17/07/2015

(54) Title of the invention : WRITING INSTRUMENT

(51) International classification :B43K8/02
(31) Priority Document No :2012-201084
(32) Priority Date :13/09/2012
(33) Name of priority country :Japan
(86) International Application No :PCT/JP2013/070137
Filing Date :25/07/2013
(87) International Publication No :WO 2014/041902
(61) Patent of Addition to Application Number :NA
Filing Date :NA
(62) Divisional to Application Number :NA
Filing Date :NA

(71)**Name of Applicant :**
**1)KOKUYO S&T CO. LTD.**
Address of Applicant :1-1, Oimazato Minami 6-chome, Higashinari-ku, Osaka-shi, Osaka 5378686 Japan
(72)**Name of Inventor :**
**1)MATSUSHITA, Kinya**
**2)FUKUI, Tetsuya**

(57) Abstract :
The present invention is provided with: a writing instrument body (H) in which a pen tip (5) is supported in a distal end part; an ink cartridge (2) screwed into the writing instrument body (H) and capable of storing ink therein; a cover (3) for covering the ink cartridge (2), the cover (3) being screwed into the writing instrument body (H), and an interlocking mechanism (R) for transmitting, to the ink cartridge (2), a screwing force exerted when the cover (3) is screwed into the writing instrument body (H), so as to also screw the ink cartridge (2) into the writing instrument body (H); and the interlocking mechanism (R) is configured so that a separation force exerted to separate the cover (3) from the writing instrument body (H) is not transmitted to the ink cartridge (2).

No. of Pages : 29 No. of Claims : 5

(12) PATENT APPLICATION PUBLICATION
(19) INDIA
(22) Date of filing of Application :12/03/2015
(21) Application No.656/KOLNP/2015 A
(43) Publication Date : 17/07/2015

(54) Title of the invention : COMPONENT WITH DEFORMABLE PADS

(51) International classification :F16C33/12,F16C23/02,F16C23/04
(31) Priority Document No :61/728,112
(32) Priority Date :19/11/2012
(33) Name of priority country :U.S.A.
(86) International Application No :PCT/US2013/070546
Filing Date :18/11/2013
(87) International Publication No :WO 2014/078783
(61) Patent of Addition to Application Number :NA
Filing Date :NA
(62) Divisional to Application Number :NA
Filing Date :NA

(71)**Name of Applicant :**
**1)GKN SINTER METALS, LLC**
Address of Applicant :3300 University Drive, Auburn Hills, MI 48326 U.S.A.
(72)**Name of Inventor :**
**1)SAVU, Virgiliu-Adrian**
**2)GEIMAN, Timothy, E.**
**3)KEEBLE, Allan**
**4)LAUGHLIN, Timothy**

(57) Abstract :
A component (10) is adapted for contact with a mating component (50) during attachment of the components to one another to form a related assembly in which a deformable pad (26) or pads improve stress distribution. The component includes a body having an interface surface in which the body is adapted to be contacted with the mating component at the interface surface of the body. One or more deformable pads are formed in the interface surface. Each deformable pad has a top surface that is offset outwardly from the interface surface relative to the body and a groove surrounding the deformable pad that is offset inwardly from the interface surface relative to the body.

No. of Pages : 20 No. of Claims : 18

(12) PATENT APPLICATION PUBLICATION
(19) INDIA
(22) Date of filing of Application :09/03/2015
(21) Application No.596/KOLNP/2015 A
(43) Publication Date : 17/07/2015

(54) Title of the invention : CONTACT LENS USE IN THE TREATMENT OF AN OPHTHALMOLOGIC CONDITION

| | |
|---|---|
| (51) International classification | :G02C7/04,A61F9/013,A61K38/47 |
| (31) Priority Document No | :61/682,008 |
| (32) Priority Date | :10/08/2012 |
| (33) Name of priority country | :U.S.A. |
| (86) International Application No | :PCT/US2013/054425 |
| Filing Date | :09/08/2013 |
| (87) International Publication No | :WO 2014/026163 |
| (61) Patent of Addition to Application Number | :NA |
| Filing Date | :NA |
| (62) Divisional to Application Number | :NA |
| Filing Date | :NA |

(71)**Name of Applicant :**
**1)OSIO CORPORATION D/B/A YOLIA HEALTH**
Address of Applicant :810 A Avenue, Coronado, CA 92118 U.S.A.
(72)**Name of Inventor :**
**1)GRANT, Stuart, C.**
**2)OSIO HERNANDEZ-PONS, Alberto**
**3)RINEHART, John, Michael**

(57) Abstract :
The present disclosure relates to the use of contact lenses for treating one or more ophthalmologic conditions. In some embodiments the contact lenses may be used to treat presbyopia, induced myopia, computer vision syndrome (CVS), insufficient accommodation, or a condition associated with insufficient accommodation. The contact lens may include a number of regions having different geometries (e.g., curvature, width, diameter) depending on the flattest keratonomy of the cornea to achieve a suitable fit. For example, the contact lens may include an optic zone surrounded by an inner peripheral region and an outer peripheral region surrounding the inner peripheral region, each exhibiting varying degrees of curvature. The fitted contact lens may be selected based on a measured sagittal depth and/or eccentricity of the cornea. When fitted, an appropriate amount of fluid may accumulate between the cornea of the eye and the contact lens. In addition, the lens may exhibit a sufficient amount of apical clearance such that when the wearer blinks, the lens moves no more than 1 mm on the eye. Further, the lens and the eye may be mutually structured such that bubbles greater than 0.5 mm in diameter are prevented from forming between the contact lens and the eye. The contact lens may be used in combination with a suitable bioactive agent providing for enhanced visual correction.

No. of Pages : 49 No. of Claims : 24

(12) PATENT APPLICATION PUBLICATION
(21) Application No.597/KOLNP/2015 A
(19) INDIA
(22) Date of filing of Application :09/03/2015
(43) Publication Date : 17/07/2015

(54) Title of the invention : AUTOMATIC MACHINE TO BEND ELECTRO-WELDED MESHES

(51) International classification :B21F27/14,B21D11/12
(31) Priority Document No :PN2012A000069
(32) Priority Date :19/11/2012
(33) Name of priority country :Italy
(86) International Application No :PCT/IB2013/059881
Filing Date :04/11/2013
(87) International Publication No :WO 2014/076605
(61) Patent of Addition to Application Number :NA
Filing Date :NA
(62) Divisional to Application Number :NA
Filing Date :NA

(71)**Name of Applicant :**
**1)A.W.M. S.P.A.**
Address of Applicant :S.S. 13 Pontebbana, Km 146, I-33010 Magnano in Riviera (UD) Italy
(72)**Name of Inventor :**
**1)BERNARDINIS, Claudio**

(57) Abstract :
Automatic machine for bending electro-welded meshes formed with longitudinal and transversal wires (1) having different lengths and/or different pitches, the machine being provided with a plurality of bending pins (2, 2-1, 2-2), operated in a vertical direction, said bending pins being reciprocally spaced by a length equal to the pitch of the mesh to be bent, and with a plurality of bending arms (3, 4, 4-1), driven with a composite motion to bend the wires around the bending pins, said bending unit (U) being mounted on a structure (10) of the machine and being mobile in a direction transversal to the direction of movement of the mesh (R), said bending unit (U) being also rotating in the two directions around its own vertical axis (W). The bending pins (2, 2-1, 2-2) are driven by respective actuators (8) contained in the bending unit (U), which are powered selectively and independently of one another according to a prearranged program by a machine control unit and the bending arms (3, 4, 4-1 ) are connected to the bending unit (U) through an articulated kinematic mechanism (11-13, 16-19) and are driven selectively and independently of one another by the program of the control unit, in a coordinated manner with the corresponding bending pins.

No. of Pages : 24 No. of Claims : 7

(12) PATENT APPLICATION PUBLICATION
(19) INDIA
(22) Date of filing of Application :12/03/2015
(21) Application No.657/KOLNP/2015 A
(43) Publication Date : 17/07/2015

(54) Title of the invention : TREATMENT FOR RHEUMATOID ARTHRITIS

(51) International classification :C07K16/24,A61K39/395,A61P29/00
(31) Priority Document No :12185235.4
(32) Priority Date :20/09/2012
(33) Name of priority country :EPO
(86) International Application No :PCT/EP2013/069501
Filing Date :19/09/2013
(87) International Publication No :WO 2014/044768
(61) Patent of Addition to Application Number :NA
Filing Date :NA
(62) Divisional to Application Number :NA
Filing Date :NA

(71)**Name of Applicant :**
**1)MORPHOSYS AG**
Address of Applicant :Lena-Christ-Strasse 48, 82152 Martinsried/Planegg Germany
(72)**Name of Inventor :**
**1)HAERTLE, STEFAN**
**2)LECLAIR, STEPHANE**
**3)SHEBL, AMGAD**
**4)STEIDL, STEFAN**

(57) Abstract :
The present invention provides anti-GM-CSF antibodies for use in the treatment of rheumatoid arthritis. Anti-GM-CSF antibodies, in particular MOR103, are administered to patients suffering from rheumatoid arthritis at dosages that are beneficial in a clinical setting.

No. of Pages : 27 No. of Claims : 20

(12) PATENT APPLICATION PUBLICATION
(21) Application No.658/KOLNP/2015 A
(19) INDIA
(22) Date of filing of Application :12/03/2015
(43) Publication Date : 17/07/2015

(54) Title of the invention : FIXING MEMBER, FIXING DEVICE, AND IMAGE FORMING APPARATUS

(51) International classification :G03G15/20
(31) Priority Document No :2012-236551
(32) Priority Date :26/10/2012
(33) Name of priority country :Japan
(86) International Application No :PCT/JP2013/078398
Filing Date :11/10/2013
(87) International Publication No :WO 2014/065219
(61) Patent of Addition to Application Number :NA
Filing Date :NA
(62) Divisional to Application Number :NA
Filing Date :NA

(71)**Name of Applicant :**
**1)RICOH COMPANY, LTD.**
Address of Applicant :3-6, Nakamagome 1-chome, Ohta-ku, Tokyo, 1438555 Japan
(72)**Name of Inventor :**
**1)KONDOH, Tsuneaki**
**2)NATORI, Junichiro**
**3)SUGAWARA, Tomoaki**

(57) Abstract :
A fixing member, including a releasing layer, wherein the releasing layer contains a fluoropolymer and a polysiloxane having a cross linked structure, and wherein the fixing member is used in a process for heating a toner image on a recording medium to thereby fix the toner image onto the recording medium.

No. of Pages : 33 No. of Claims : 9

(12) PATENT APPLICATION PUBLICATION
(21) Application No.490/KOLNP/2015 A
(19) INDIA
(22) Date of filing of Application :25/02/2015
(43) Publication Date : 17/07/2015

(54) Title of the invention : THREE-DIMENSIONAL OBJECT DETECTION DEVICE, AND THREE-DIMENSIONAL OBJECT DETECTION METHOD

| | |
|---|---|
| (51) International classification | :H04N7/18,B60R21/00,G06T1/00 |
| (31) Priority Document No | :2012-166527 |
| (32) Priority Date | :27/07/2012 |
| (33) Name of priority country | :Japan |
| (86) International Application No | :PCT/JP2013/070308 |
| Filing Date | :26/07/2013 |
| (87) International Publication No | :WO 2014/017624 |
| (61) Patent of Addition to Application Number | :NA |
| Filing Date | :NA |
| (62) Divisional to Application Number | :NA |
| Filing Date | :NA |

(71)**Name of Applicant :**
**1)NISSAN MOTOR CO., LTD.**
Address of Applicant :2, Takara-cho, Kanagawa-ku Yokohama-shi, Kanagawa 221-0023, Japan
(72)**Name of Inventor :**
**1)Yasuhisa HAYAKAWA**
**2)Osamu FUKATA**
**3)Masayuki TAKEMURA**
**4)Akira UTAGAWA**
**5)Shoji MURAMATSU**
**6)Kota IRIE**

(57) Abstract :
A three-dimensional object detection device characterized by being provided with: an imaging means (10) mounted on a vehicle and provided with a lens for forming an image of the rear of the host vehicle; a three-dimensional object detection means (33) for detecting a three- dimensional object located in a detection region on the basis of the captured image; a nighttime determination means (34) for determining whether it is nighttime; a luminance detection unit (35) for detecting the luminance of multiple image regions on the basis of the captured image; a luminance peak detection means (36) for detecting a luminance peak, which has a luminance gradient that is equal to or greater than a predetermined value from among luminance peaks, as the target luminance peak; and a control means (37) for inhibiting the detection of a three dimensional object by means of the three dimensional object detection means (33) on the basis of the detection result of the detected target luminance peak when it was determined to be nighttime.

No. of Pages : 92 No. of Claims : 19

(12) PATENT APPLICATION PUBLICATION
(21) Application No.60/KOL/2014 A
(19) INDIA
(22) Date of filing of Application :15/01/2014
(43) Publication Date : 17/07/2015

(54) Title of the invention : A PROCESS FOR SIMULTANEOUS REMOVAL OF TOTAL SUSPENDED SOLID (TSS)AND TOTAL DISSOLVED SOLID (TDS) FROM GAS CLEANING PLANT(GCP) WATER OF STEEL MAKING PROCESS.

| | |
|---|---|
| (51) International classification | :C02F 1/00 |
| (31) Priority Document No | :NA |
| (32) Priority Date | :NA |
| (33) Name of priority country | :NA |
| (86) International Application No | :NA |
| Filing Date | :NA |
| (87) International Publication No | : NA |
| (61) Patent of Addition to Application Number | :NA |
| Filing Date | :NA |
| (62) Divisional to Application Number | :NA |
| Filing Date | :NA |

(71)**Name of Applicant :**
**1)TATA STEEL LIMITED**
Address of Applicant :JAMSHEDPUR-831001,INDIA
Jharkhand India
(72)**Name of Inventor :**
**1)SUPROTIM DAS**
**2)SUPRIYA SARKAR**
**3)GURMIT SINGH**
**4)S.MISTRI**
**5)K.CHAKRAVARTY**
**6)ARIJIT DAS**

(57) Abstract :
A process for simultaneous removal of total suspended solid (TSS) and total dissolved solids (TDS) from gas cleaning plant (GCP) water of steel making process is disclosed. The process involves mixing of GCP water with slag quenching water followed by $CO_2$ purging. The invention provides a process for substantial removal of dissolved and un-dissolved elements to precipitate out and formation of an insoluble metal compounds without leaving unwanted ions in the thickener water. The treated water is reused by adjustment of pH with sequential purging of carbon dioxide gas.

No. of Pages : 13 No. of Claims : 9

(12) PATENT APPLICATION PUBLICATION
(19) INDIA
(22) Date of filing of Application :09/03/2015
(21) Application No.600/KOLNP/2015 A
(43) Publication Date : 17/07/2015

(54) Title of the invention : MOBILE COMMUNICATION METHOD, WIRELESS BASE STATION, AND MOBILE STATION

(51) International classification :H04W72/04,H04W28/14,H04W92/20
(31) Priority Document No :2012-195289
(32) Priority Date :05/09/2012
(33) Name of priority country :Japan
(86) International Application No :PCT/JP2013/071609
Filing Date :09/08/2013
(87) International Publication No :WO 2014/038349
(61) Patent of Addition to Application Number :NA
Filing Date :NA
(62) Divisional to Application Number :NA
Filing Date :NA

(71)**Name of Applicant :**
**1)NTT DOCOMO, INC.**
Address of Applicant :11-1, Nagatacho 2-chome, Chiyoda-ku, Tokyo 1006150 Japan
(72)**Name of Inventor :**
**1)UCHINO, Tooru**
**2)TAKAHASHI, Hideaki**
**3)HAPSARI, Wuri Andarmawanti**

(57) Abstract :
In order to avoid the development of an up data transmission delay when an Inter site CA is implemented, a mobile communication method according to the present invention includes: a step of a mobile station (UE) transmitting an SR to a wireless base station (eNB#1) by using PUCCH-SR; a step of the wireless base station (eNB#1) notifying the mobile station (UE) of a UL grant; a step of the mobile station (UE) transmitting, by using a PUSCH designated by the UL grant a BSR in a bearer (#B/LCH#B) to the wireless base station (eNB#1); a step of the wireless base station (eNB#1) notifying a wireless base station (eNB#10) of a buffer retained amount in the bearer (#B/LCH#B); and a step of the wireless base station (eNB#10) allocating, in accordance with the reception of the buffer retained amount, an up data transmission resource to the mobile station (UE).

No. of Pages : 52 No. of Claims : 10

(12) PATENT APPLICATION PUBLICATION
(19) INDIA
(22) Date of filing of Application :12/03/2015
(21) Application No.664/KOLNP/2015 A
(43) Publication Date : 17/07/2015

(54) Title of the invention : MULTILAYERED CORE/SHELL MICROCAPSULES

(51) International classification :B01J13/10,B01J13/14,B01J13/16
(31) Priority Document No :12185741.1
(32) Priority Date :24/09/2012
(33) Name of priority country :EPO
(86) International Application No :PCT/EP2013/069681
Filing Date :23/09/2013
(87) International Publication No :WO 2014/044840
(61) Patent of Addition to Application Number :NA
Filing Date :NA
(62) Divisional to Application Number :NA
Filing Date :NA

(71)**Name of Applicant :**
**1)FIRMENICH SA**
Address of Applicant :1 route des Jeunes, PO Box 239, CH-1211 Geneva 8 Switzerland
(72)**Name of Inventor :**
**1)DARDELLE, GRÈGORY**
**2)JACQUEMOND, MARLÈNE**
**3)ERNI, PHILIPP**

(57) Abstract :
The invention relates to a method of making multilayer core/shell microcapsules for delivery of active agents such as fragrance components of perfume oils. The method includes forming an outer shell by coacervation surrounding an internal phase which contains the active agent; and forming an inner shell by interfacial polymerization at the interface between the internal phase and the outer shell. The internal phase contains the active agent. The microcapsules are typically incorporated in a consumer product wherein the multilayer shell prevents the active agent from release until desired generally during use of the consumer product.

No. of Pages : 34 No. of Claims : 15

(12) PATENT APPLICATION PUBLICATION
(19) INDIA
(22) Date of filing of Application :19/02/2015
(21) Application No.433/KOLNP/2015 A
(43) Publication Date : 17/07/2015

(54) Title of the invention : HYDROGEN GENERATION ASSEMBLIES

(51) International classification :C01B3/50
(31) Priority Document No :13/600,096
(32) Priority Date :30/08/2012
(33) Name of priority country :U.S.A.
(86) International Application No :PCT/US2013/056908
Filing Date :27/08/2013
(87) International Publication No :WO 2014/036036
(61) Patent of Addition to Application Number :NA
Filing Date :NA
(62) Divisional to Application Number :NA
Filing Date :NA

(71)**Name of Applicant :**
**1)ELEMENT 1 CORP.**
Address of Applicant :62971 Plateau Drive, Suite 300, Bend, Oregon 97701 U.S.A.
(72)**Name of Inventor :**
**1)EDLUND, David, J.**
**2)SCHLUTER, Robert**

(57) Abstract :
Hydrogen generation assemblies and their components are disclosed. In some embodiments the assemblies may include a pump controller configured to select a flowrate from a plurality of flowrates based on detected pressure, and to operate the pump at the selected flowrate. In some embodiments, the assemblies may include a purge valve assembly configured to allow at least one pressurized gas to flow through a purge conduit from a pressurized gas assembly to a fuel processing assembly when power to the fuel processing assembly is interrupted. In some embodiments, the assemblies may include a damper controller configured to move a damper between fully open and closed positions based, at least in part, on detected temperature in a hydrogen producing region. In some embodiments, the assemblies may include a reformer controller configured to operate a fuel processing assembly between run and standby modes based, at least in part, on detected pressure.

No. of Pages : 90 No. of Claims : 35

(12) PATENT APPLICATION PUBLICATION
(21) Application No.541/KOLNP/2015 A
(19) INDIA
(22) Date of filing of Application :02/03/2015
(43) Publication Date : 17/07/2015

(54) Title of the invention : METHOD FOR CHECKING A VALUE DOCUMENT, VALUE DOCUMENT, USE THEREOF AND VALUE DOCUMENT SYSTEM

(51) International classification :G07D7/00,B42D15/00,G07D7/12
(31) Priority Document No :102012019251.7
(32) Priority Date :28/09/2012
(33) Name of priority country :Germany
(86) International Application No :PCT/EP2013/002918
Filing Date :27/09/2013
(87) International Publication No :WO 2014/048577
(61) Patent of Addition to Application Number :NA
Filing Date :NA
(62) Divisional to Application Number :NA
Filing Date :NA

(71)**Name of Applicant :**
**1)GIESECKE & DEVRIENT GMBH**
Address of Applicant :Prinzregentenstrasse 159, 81677 München Germany
(72)**Name of Inventor :**
**1)GIERING, Thomas**
**2)KECHT, Johann**
**3)RAUSCHER, Wolfgang**
**4)STEINLEIN, Stephan**

(57) Abstract :
The invention relates to a method for checking a value document, especially the authenticity and/or the nominal value of a value document having characteristic luminescent substances, the method comprising the steps of: a1) carrying out a location-specific measurement of first luminescence intensities (L1) at a first emission wavelength in different locations of the value document having the location coordinates (O), to thereby obtain pairs of measured values (O/L1); b1) statistically analyzing the first luminescence intensities (L1) measured on the basis of the individual location coordinates (O), by determining at least one statistical parameter by way of a statistical method; and c1) comparing the statistical parameter determined in step b1) to one or more threshold values.

No. of Pages : 57 No. of Claims : 15

(12) PATENT APPLICATION PUBLICATION
(19) INDIA
(22) Date of filing of Application :02/03/2015
(21) Application No.542/KOLNP/2015 A
(43) Publication Date : 17/07/2015

(54) Title of the invention : SYSTEMS AND METHODS FOR FORECASTING HVAC OPERATION COST

(51) International classification :G05B 13/00
(31) Priority Document No :61/700,450
(32) Priority Date :13/09/2012
(33) Name of priority country :U.S.A.
(86) International Application No :PCT/US2013/059499
Filing Date :12/09/2013
(87) International Publication No :WO 2014/043373
(61) Patent of Addition to Application Number :NA
Filing Date :NA
(62) Divisional to Application Number :NA
Filing Date :NA

(71)**Name of Applicant :**
**1)TRANE INTERNATIONAL INC.**
Address of Applicant :ONE CENTENNIAL AVENUE, PISCATAWAY, NEW JERSEY 08855 U.S.A.
(72)**Name of Inventor :**
**1)EDENS, JOHN RAYMOND**

(57) Abstract :
A method of projecting a cost of operating a heating, ventilation, and/or air conditioning (HVAC) system includes providing weather forecast data to a system controller of the HVAC system, providing energy cost data to the system controller, providing an interface to the system controller, and generating a first projected cost of operating the HVAC system as a function of the weather forecast data and the energy cost data.

No. of Pages : 33 No. of Claims : 20

(12) PATENT APPLICATION PUBLICATION
(21) Application No.608/KOLNP/2015 A
(19) INDIA
(22) Date of filing of Application :09/03/2015
(43) Publication Date : 17/07/2015

(54) Title of the invention : SHAPED SURGICAL THREAD FOR INTRACORPORAL KNOTTING AND METHOD OF PRODUCTION

(51) International classification :A61B17/06
(31) Priority Document No :PP 50202012
(32) Priority Date :17/09/2012
(33) Name of priority country :Slovakia
(86) International Application No :PCT/SK2013/000010
Filing Date :16/09/2013
(87) International Publication No :WO 2014/042600
(61) Patent of Addition to Application Number :NA
Filing Date :NA
(62) Divisional to Application Number :NA
Filing Date :NA

(71)**Name of Applicant :**
**1)BABALA, Jozef**
Address of Applicant :Krátka 1420/1, 811 03 Bratislava Slovakia
(72)**Name of Inventor :**
**1)BABALA, Jozef**

(57) Abstract :
Shaped surgical suture for intracorporeal knotting is shaped from an elastic surgical suture that is gelatine coated or thermally treated with shape memory to form two 3D open and unfastened loops (1) ended with C curve (2) whereas the first loop (1) is equipped with a surgical needle (3).

No. of Pages : 13 No. of Claims : 8

(12) PATENT APPLICATION PUBLICATION
(19) INDIA
(22) Date of filing of Application :16/01/2014
(21) Application No.67/KOL/2014 A
(43) Publication Date : 17/07/2015

(54) Title of the invention : A SYSTEM FOR STABILIZATION OF STEEL MAKING (BOF) SLAG THROUGH HYDRATION TREATMENT AND A METHOD OF SUCH STABILIZATION

| | |
|---|---|
| (51) International classification | :C21C 5/00 |
| (31) Priority Document No | :NA |
| (32) Priority Date | :NA |
| (33) Name of priority country | :NA |
| (86) International Application No | :NA |
| Filing Date | :NA |
| (87) International Publication No | : NA |
| (61) Patent of Addition to Application Number | :NA |
| Filing Date | :NA |
| (62) Divisional to Application Number | :NA |
| Filing Date | :NA |

(71)**Name of Applicant :**
**1)STEEL AUTHORITY OF INDIA LIMITED**
Address of Applicant :RESEARCH & DEVELOPMENT CENTRE FOR IRON & STEEL, DORANDA, RANCHI-834002. Jharkhand India
(72)**Name of Inventor :**
**1)MITRA MAZUMDER SUBHAJIT**
**2)SATYA PRAKASH**
**3)TIWARI SATYENDRA NATH**
**4)AGRAWAL ROOPAK**
**5)CHOUBEY MUKTESHWAR**

(57) Abstract :
The present invention relates to a system for stabilization of Steel Making (BOF) slag through hydration treatment using saturated steam and method for such stabilization. More particularly, the present invention is directed to provide a system for accelerated primary stabilization of BOF slag using steam as medium of stabilization through hydration, by introduction of saturated steam at predetermined pressure and temperature into a pressure vessel such as to induce penetration of steam into the slag sample and thereby stabilize the slag. The system and method to stabilize Steel Making (BOF) slag monitors the progress of the hydration reaction through surrogate parameters of pH and alkalinity which when stabilized can be used as indicator of end point of reaction and therefore can be used as an indicator of stabilization of BOF slag involving the stabilization of free lime at reduced level avoiding the conventional technical limitation of expansion of BOF slag and thus rendering the slag suitable for further use/reuse for variety of applications.

No. of Pages : 22 No. of Claims : 16

(12) PATENT APPLICATION PUBLICATION
(19) INDIA
(22) Date of filing of Application :19/02/2015
(21) Application No.432/KOLNP/2015 A
(43) Publication Date : 17/07/2015

(54) Title of the invention : METHOD AND APPARATUS FOR INTENT PREDICTION AND PROACTIVE SERVICE OFFERING

(51) International classification :H04M3/00
(31) Priority Document No :61/680,957
(32) Priority Date :08/08/2012
(33) Name of priority country :U.S.A.
(86) International Application No :PCT/US2013/054193
Filing Date :08/08/2013
(87) International Publication No :WO 2014/026035
(61) Patent of Addition to Application Number :NA
Filing Date :NA
(62) Divisional to Application Number :NA
Filing Date :NA

(71)**Name of Applicant :**
**1)24/7 CUSTOMER, INC.**
Address of Applicant :910 Hamilton Ave., Suite 240, Campbell, CA 95008 U.S.A.
(72)**Name of Inventor :**
**1)BAUL, Samrat**
**2)MONEGAN, Michael**

(57) Abstract :
An intelligent IVR system identifies a customer based on previous customer interactions. Customer intent is predicted for an ongoing interaction and personalized services are proactively offered to the customer. A self optimizing algorithm improves intent prediction customer identity and customer willingness to engage and use IVR.

No. of Pages : 29 No. of Claims : 29

(12) PATENT APPLICATION PUBLICATION
(19) INDIA
(22) Date of filing of Application :26/02/2015
(21) Application No.498/KOLNP/2015 A
(43) Publication Date : 17/07/2015

(54) Title of the invention : METHOD AND SYSTEM FOR MICROFLUIDIC PARTICLE ORIENTATION AND/OR SORTING

(51) International classification :G01N21/00,G01N21/64,F15D1/00
(31) Priority Document No :61/676,391
(32) Priority Date :27/07/2012
(33) Name of priority country :U.S.A.
(86) International Application No :PCT/NZ2013/000135
Filing Date :29/07/2013
(87) International Publication No :WO 2014/017929
(61) Patent of Addition to Application Number :NA
Filing Date :NA
(62) Divisional to Application Number :NA
Filing Date :NA

(71)**Name of Applicant :**
**1)AUCKLAND UNISERVICES LIMITED**
Address of Applicant :Level 10, 70 Symonds Street, Auckland New Zealand
(72)**Name of Inventor :**
**1)SIMPSON, Miriam Cather**
**2)ROHDE, Charles Alan**

(57) Abstract :
A system for orienting particles in a microfluidic system includes one or more radiation pressure sources arranged to expose particles to radiation pressure to cause the particles to adopt a particular orientation in the fluid. A system for sorting particles in a microfluidic system includes a detection stage arranged to detect at least one difference or discriminate between particles in the fluid flow past the detection stage and one or more radiation pressure sources past which the particles move sequentially and a controller arranged to switch radiation energy to cause a change in direction of movement of selected particles in the fluid flow to sort the particles. The particles may be biological particles such as spermatazoa. The radiation pressure may be optical pressure and may be from one or more waveguides which may extend across a channel of the microfluidic system.

No. of Pages : 30 No. of Claims : 35

(12) PATENT APPLICATION PUBLICATION
(19) INDIA
(22) Date of filing of Application :03/03/2015
(21) Application No.545/KOLNP/2015 A
(43) Publication Date : 17/07/2015

(54) Title of the invention : ACTUATOR

(51) International classification :F15B11/00,B61F5/24,F15B15/18
(31) Priority Document No :P2012-179156
(32) Priority Date :13/08/2012
(33) Name of priority country :Japan
(86) International Application No :PCT/JP2013/070984
Filing Date :02/08/2013
(87) International Publication No :WO 2014/027576
(61) Patent of Addition to Application Number :NA
Filing Date :NA
(62) Divisional to Application Number :NA
Filing Date :NA

(71)**Name of Applicant :**
**1)KAYABA INDUSTRY CO., LTD.**
Address of Applicant :World Trade Center Bldg., 4-1, Hamamatsu-cho 2-chome, Minato-ku, Tokyo 1056111 Japan
(72)**Name of Inventor :**
**1)Takayuki OGAWA**

(57) Abstract :
This actuator is provided with: an expansion/contraction body; a tank; a first opening/closing valve provided to a first passage connecting a rod-side chamber and a piston-side chamber; a second opening/closing valve provided to a second passage connecting the piston-side chamber and the tank; a pump for supplying a fluid to the rod-side chamber; a motor for driving the pump; a discharge passage which connects the rod-side chamber to the tank; and a valve element provided to the discharge passage. An expansion/contraction unit is integrally formed including the expansion/contraction body the first opening/closing valve and the second opening/closing valve. A drive unit is integrally formed including the pump and the motor. The expansion/contraction unit and the drive unit are configured as separate bodies.

No. of Pages : 23 No. of Claims : 6

(12) PATENT APPLICATION PUBLICATION
(19) INDIA
(22) Date of filing of Application :03/03/2015
(21) Application No.546/KOLNP/2015 A
(43) Publication Date : 17/07/2015

(54) Title of the invention : ACTUATOR

(51) International classification :F15B11/02,B61F5/24,F15B11/00
(31) Priority Document No :P2012-179155
(32) Priority Date :13/08/2012
(33) Name of priority country :Japan
(86) International Application No :PCT/JP2013/071242
Filing Date :06/08/2013
(87) International Publication No :WO 2014/027585
(61) Patent of Addition to Application Number :NA
Filing Date :NA
(62) Divisional to Application Number :NA
Filing Date :NA

(71)**Name of Applicant :**
**1)KAYABA INDUSTRY CO., LTD.**
Address of Applicant :World Trade Center Bldg., 4-1, Hamamatsu-cho 2-chome, Minato-ku, Tokyo 105-6111, Japan
(72)**Name of Inventor :**
**1)Takayuki OGAWA**

(57) Abstract :
This actuator is provided with: a cylinder; a piston inserted into the cylinder so as to be capable of sliding freely; a rod which is inserted into the cylinder, and which is connected to the piston; a rod-side chamber and a piston-side chamber which are demarcated in the cylinder by the piston; a tank; a first opening/closing valve provided to a midway point of a first passage connecting the rod-side chamber and the piston-side chamber; a second opening/closing valve provided to a midway point of a second passage connecting the piston-side chamber and the tank; a pump for supplying operating oil to the rod-side chamber; a motor for driving the pump; a discharge passage which connects the rod-side chamber and the tank; and a passive valve which is provided to a midway point of the discharge passage, and which has prescribed pressure flow rate characteristics.

No. of Pages : 23 No. of Claims : 7

(12) PATENT APPLICATION PUBLICATION
(19) INDIA
(22) Date of filing of Application :13/03/2015

(21) Application No.676/KOLNP/2015 A
(43) Publication Date : 17/07/2015

(54) Title of the invention : ARRY-520 FOR USE IN TREATING CANCER IN A PATIENT WITH LOW AAG

(51) International classification :A61K31/433,A61K31/45,A61K31/4965
(31) Priority Document No :61/682,682
(32) Priority Date :13/08/2012
(33) Name of priority country :U.S.A.
(86) International Application No :PCT/US2013/054807
Filing Date :13/08/2013
(87) International Publication No :WO 2014/028543
(61) Patent of Addition to Application Number :NA
Filing Date :NA
(62) Divisional to Application Number :NA
Filing Date :NA

(71)**Name of Applicant :**
**1)ARRAY BIOPHARMA INC.**
Address of Applicant :3200 Walnut Street, Boulder, Colorado 80301 U.S.A.
(72)**Name of Inventor :**
**1)BROWN, KARIN**
**2)FRANKLIN, RONALD B.**
**3)HINGORANI, GARY P.**
**4)LITWILER, KEVIN S.**
**5)TUNQUIST, BRIAN J.**
**6)WALKER, DUNCAN H.**

(57) Abstract :
The compound ARRY 520 for use for treating cancer in patients with low [AAG] is provided.

No. of Pages : 44 No. of Claims : 33

(12) PATENT APPLICATION PUBLICATION
(19) INDIA
(22) Date of filing of Application :19/02/2015
(21) Application No.434/KOLNP/2015 A
(43) Publication Date : 17/07/2015

(54) Title of the invention : TONER, DEVELOPER, AND IMAGE FORMING APPARATUS

(51) International classification :G03G9/087
(31) Priority Document No :2012-204480
(32) Priority Date :18/09/2012
(33) Name of priority country :Japan
(86) International Application No :PCT/JP2013/074957
Filing Date :10/09/2013
(87) International Publication No :WO 2014/046067
(61) Patent of Addition to Application Number :NA
Filing Date :NA
(62) Divisional to Application Number :NA
Filing Date :NA

(71)**Name of Applicant :**
**1)RICOH COMPANY, LTD.**
Address of Applicant :3-6, Nakamagome 1-chome, Ohta-ku, Tokyo, 1438555 Japan
(72)**Name of Inventor :**
**1)NAGATA, Kousuke**
**2)YAMADA, Masahide**
**3)NAKAYAMA, Shinya**
**4)SABU, Akiyoshi**
**5)MORITA, Tatsuya**
**6)HASE, Takamasa**
**7)AMEMORI, Suzuka**
**8)TAKAHASHI, Rintaro**

(57) Abstract :
A toner including a crystalline resin wherein the crystalline resin contains a crystalline resin having a urethane bond, a urea bond or both thereof, and wherein the crystalline resin has an average crystallite diameter of 20 nm to 70 nm.

No. of Pages : 167 No. of Claims : 14

(12) PATENT APPLICATION PUBLICATION
(19) INDIA
(22) Date of filing of Application :23/02/2015
(21) Application No.465/KOLNP/2015 A
(43) Publication Date : 17/07/2015

(54) Title of the invention : SURFACE ENHANCED PULP FIBERS, METHODS OF MAKING SURFACE ENHANCED PULP FIBERS, PRODUCTS INCORPORATING, SURFACE ENHANCED PULP FIBERS, AND METHODS OF MAKING PRODUCTS INCORPORATING SURFACE ENHANCED PULP FIBERS

(51) International classification :D21C9/00,D21B1/04,D21D1/26
(31) Priority Document No :61/692,880
(32) Priority Date :24/08/2012
(33) Name of priority country :U.S.A.
(86) International Application No :PCT/US2013/055971
Filing Date :21/08/2013
(87) International Publication No :WO 2014/031737
(61) Patent of Addition to Application Number :NA
Filing Date :NA
(62) Divisional to Application Number :NA
Filing Date :NA

(71)**Name of Applicant :**
**1)DOMTAR CORPORATION**
Address of Applicant :395 de Maisonneuve Boulevard West, Montreal, Québec H3A1L6 Canada
(72)**Name of Inventor :**
**1)PANDE, Harshad**
**2)MARCOCCIA, Bruno**

(57) Abstract :
Various embodiments of the present invention relate to surface enhanced pulp fibers various products incorporating surface enhanced pulp fibers and methods and systems for producing surface enhanced pulp fibers. Various embodiments of surface enhanced pulp fibers have significantly increased surface areas compared to conventional refined fibers while advantageously minimizing reductions in length following refinement. The surface enhanced pulp fibers can be incorporated into a number of products that might benefit from such properties including for example paper products paperboard products fiber cement boards fiber reinforced plastics fluff pulps hydrogels cellulose acetate products and carboxymethyl cellulose products. In some embodiments a plurality of surface enhanced pulp fibers have a length weighted average fiber length of at least about 0.3 millimeters and an average hydrodynamic specific surface area of at least about 10 square meters per gram wherein the number of surface enhanced pulp fibers is at least 12 000 fibers/milligram on an oven dry basis.

No. of Pages : 40 No. of Claims : 26

(12) PATENT APPLICATION PUBLICATION
(19) INDIA
(22) Date of filing of Application :03/03/2015
(21) Application No.550/KOLNP/2015 A
(43) Publication Date : 17/07/2015

(54) Title of the invention : DIAGNOSTIC DEVICE, THERAPEUTIC DEVICE, AND USES THEREOF

(51) International classification :A61B5/00,A61B1/303
(31) Priority Document No :61/679,444
(32) Priority Date :03/08/2012
(33) Name of priority country :U.S.A.
(86) International Application No :PCT/US2013/053459
Filing Date :02/08/2013
(87) International Publication No :WO 2014/022792
(61) Patent of Addition to Application Number :NA
Filing Date :NA
(62) Divisional to Application Number :NA
Filing Date :NA

(71)**Name of Applicant :**
**1)MM OPTICS, LTDA.**
Address of Applicant :GEMINIANO COSTA 143-JARDIM SAO CARLOS, 13560-641 SO CARLOS - SP BRAZIL
**2)TRUJILLO, Jose, Roberto**
(72)**Name of Inventor :**
**1)TRUJILLO, Jose, Roberto**
**2)MENDONCA, FERNANDO DE MORAES**

(57) Abstract :
Apparatus, method, computing devices, and computer programs related to photodiagnosis and photodynamic therapy, methods of use thereof, and a method for detecting abnormal tissue, are provided.

No. of Pages : 66 No. of Claims : 20

(12) PATENT APPLICATION PUBLICATION
(19) INDIA
(22) Date of filing of Application :10/03/2015
(21) Application No.618/KOLNP/2015 A
(43) Publication Date : 17/07/2015

(54) Title of the invention : APPARATUS FOR STORING HEADPHONES OR EARPHONES

(51) International classification :H04R1/10,H02G11/02
(31) Priority Document No :NA
(32) Priority Date :NA
(33) Name of priority country :NA
(86) International Application No :PCT/EP2012/065973
Filing Date :15/08/2012
(87) International Publication No :WO 2014/026716
(61) Patent of Addition to Application Number :NA
Filing Date :NA
(62) Divisional to Application Number :NA
Filing Date :NA

(71)**Name of Applicant :**
**1)ATHOS HOLDING GMBH**
Address of Applicant :Westerfelder Weg 25, 58515 Lüdenscheid Germany
(72)**Name of Inventor :**
**1)STEINMÜLLER, Jörg**
**2)KLEINDOPP, Günter**
**3)GLOMB, Martin**

(57) Abstract :
The invention relates to an apparatus for storing headphones or earphones comprising a base plate (11) having an axis (14) that is integrally moulded at right angles with respect thereto and on which a winding coil (2) is rotatably mounted wherein the winding coil (2) has two circular discs (22, 27) that are arranged parallel to one another and between which a winding space is formed and wherein a cutout (25) for feeding through a mini jack plug (71) is arranged in the upper disc (22), which is arranged on the side that is averted from the base plate (11).

No. of Pages : 28 No. of Claims : 16

(12) PATENT APPLICATION PUBLICATION
(19) INDIA
(22) Date of filing of Application :13/03/2015
(21) Application No.680/KOLNP/2015 A
(43) Publication Date : 17/07/2015

(54) Title of the invention : 14-HYDROXYEICOSANOIC ACID-BASED FATTY ACID AMIDE, AS AN ORGANOGELLING AGENT

(51) International classification :C07C235/10
(31) Priority Document No :1259491
(32) Priority Date :05/10/2012
(33) Name of priority country :France
(86) International Application No :PCT/FR2013/052346
Filing Date :02/10/2013
(87) International Publication No :WO 2014/053774
(61) Patent of Addition to Application Number :NA
Filing Date :NA
(62) Divisional to Application Number :NA
Filing Date :NA

(71)**Name of Applicant :**
**1)ARKEMA FRANCE**
Address of Applicant :420, Rue d'Estienne d'Orves, F-92700 Colombes France
(72)**Name of Inventor :**
**1)BERNARD, MICHAEL Y**
**2)DUQUENNE, CHRISTOPHE**
**3)DUBOIS, JEAN-LUC**

(57) Abstract :
The invention relates to a fatty acid amide which comprises at least one product of the reaction of a reaction mixture comprising: a) at least one amine selected from: a linear C2 to C12 aliphatic amine and/or a C6 to C18 cycloaliphatic amine and/or an aromatic amine, b) 14-hydroxyeicosanoic acid (14-HEA) in the absence or in the presence of 12-hydroxystearic acid (12-HSA), c) optionally, at least one monoacid selected from nonhydroxylated, saturated linear C6 to C18 carboxylic acids, d) optionally, at least one second amine other than a) and selected from linear C2 to C12 aliphatic amines. The invention also covers the use of this amide as an organogelling agent for coating, moulding, mastic, sealing-agent, stripping-agent or cosmetic compositions.

No. of Pages : 28 No. of Claims : 19

(12) PATENT APPLICATION PUBLICATION
(19) INDIA
(22) Date of filing of Application :18/02/2015
(21) Application No.416/KOLNP/2015 A
(43) Publication Date : 17/07/2015

(54) Title of the invention : USE OF P47 FROM PLASMODIUM FALCIPARUM (PFS47) OR PLASMODIUM VIVAX (PVS47) AS A VACCINE OR DRUG SCREENING TARGETS FOR THE INHIBITION OF HUMAN MALARIA TRANSMISSION

| | |
|---|---|
| (51) International classification | :C12N15/30,C12N15/63,C07K14/445 |
| (31) Priority Document No | :61/684,333 |
| (32) Priority Date | :17/08/2012 |
| (33) Name of priority country | :U.S.A. |
| (86) International Application No | :PCT/US2013/055372 |
| Filing Date | :16/08/2013 |
| (87) International Publication No | :WO 2014/028852 |
| (61) Patent of Addition to Application Number | :NA |
| Filing Date | :NA |
| (62) Divisional to Application Number | :NA |
| Filing Date | :NA |

(71)**Name of Applicant :**
**1)THE UNITED STATES OF AMERICA, AS REPRESENTED BY THE SECRETARY, DEPARTMENT OF HEALTH AND HUMAN SERVICES**
Address of Applicant :6011 Executive Boulevard, Suite 325, Rockville, Maryland 20852 U.S.A.
(72)**Name of Inventor :**
**1)BARILLAS-MURY, Carolina Veronica**
**2)MOLINA CRUZ Alvaro**

(57) Abstract :
The inventors have identified Pfs47, a gene from the malaria parasite P. falciparum, as a key factor for survival of these parasites in the mosquito Anopheles gambiae. A. gambiae is a major natural vector of human malaria in Africa. The Pfs47 protein may allow the parasite to survive in the mosquito by manipulating the mosquito s immune system. The inventors propose the use of P47 proteins, including Pfs47 and Pvs47 as a target of vaccines or pharmaceutical agents that will block or reduce P. falciparum or P. vivax infection in A. gambiae or other anopheline mosquitoes and thus prevent further transmission of the parasites in humans.

No. of Pages : 61 No. of Claims : 68

(12) PATENT APPLICATION PUBLICATION
(19) INDIA
(22) Date of filing of Application :24/02/2015
(21) Application No.478/KOLNP/2015 A
(43) Publication Date : 17/07/2015

(54) Title of the invention : REAL-TIME LOAN PROCESSING AND LOAN FUND

(51) International classification :G06Q40/02
(31) Priority Document No :13/556,669
(32) Priority Date :24/07/2012
(33) Name of priority country :U.S.A.
(86) International Application No :PCT/US2013/051664
Filing Date :23/07/2013
(87) International Publication No :WO 2014/018522
(61) Patent of Addition to Application Number :NA
Filing Date :NA
(62) Divisional to Application Number :NA
Filing Date :NA

(71)**Name of Applicant :**
**1)ADAPTIVE PAYMENTS, INC.**
Address of Applicant :1843 N.e. 26th Avenue, Fort Lauderdale, FL 33305 U.S.A.
(72)**Name of Inventor :**
**1)KAPUR, Shashi**
**2)BIANCO, Ralph, A.**

(57) Abstract :
A system and method for processing lending transactions that may facilitate prompt transfer of funds (for example loan funds) to an individual in a secure manner. An adaptive payment server may receive first identification information second identification information and a request for a fund transfer. The adaptive payment server may determine an account associated with the first identification information. The adaptive payment server may authenticate identification of the account based on the second identification information. The adaptive payment server may initiate a deposit of a fund amount associated with he request into the identified account wherein the fund amount is deposited substantially immediately after the identified account has been authenticated.

No. of Pages : 44 No. of Claims : 18

(12) PATENT APPLICATION PUBLICATION
(19) INDIA
(22) Date of filing of Application :27/02/2015
(21) Application No.515/KOLNP/2015 A
(43) Publication Date : 17/07/2015

(54) Title of the invention : UNIQUELY IDENTIFYING A NETWORK-CONNECTED ENTITY

(51) International classification :G06F17/00,G06F17/30
(31) Priority Document No :13/562,065
(32) Priority Date :30/07/2012
(33) Name of priority country :U.S.A.
(86) International Application No :PCT/US2013/052605
Filing Date :30/07/2013
(87) International Publication No :WO 2014/022327
(61) Patent of Addition to Application Number :NA
Filing Date :NA
(62) Divisional to Application Number :NA
Filing Date :NA

(71)**Name of Applicant :**
**1)ADELPHIC, INC.**
Address of Applicant :1050 Waltham Street, Suite 330, Lexington, MA 02451 U.S.A.
(72)**Name of Inventor :**
**1)WANG, Changfeng, C.**
**2)PU, Hsu-Tung**

(57) Abstract :
An entity (a device a user of a device or set of devices a user of one or more applications on a device a group of users of the device or set of devices or the like) is identified across multiple device usage and application domains. The entity is assigned a unique entity identity that is generated from a set of feature data that model the entity. The feature data typically includes deterministic data device and system specific feature data and usage feature data. The identity is generated by applying to the feature data one or more rules that identify which of the feature data to use to generate the entity identity. The rules include at least one deterministic rule and at least one probabilistic rule. Periodically an identity is merged into one or more entity identities that are found by applying a rule to represent a same entity.

No. of Pages : 31 No. of Claims : 20

(12) PATENT APPLICATION PUBLICATION
(19) INDIA
(22) Date of filing of Application :16/03/2015
(21) Application No.700/KOLNP/2015 A
(43) Publication Date : 17/07/2015

(54) Title of the invention : PHOSPHATE SOLUBILIZING RHIZOBACTERIA BACILLUS FIRMUS AS BIOFERTILIZER TO INCREASE CANOLA YIELD

(51) International classification :C12N1/20,A01C1/06,A01H5/10
(31) Priority Document No :61/731,706
(32) Priority Date :30/11/2012
(33) Name of priority country :U.S.A.
(86) International Application No :PCT/CA2013/050805
Filing Date :24/10/2013
(87) International Publication No :WO 2014/082167
(61) Patent of Addition to Application Number :NA
Filing Date :NA
(62) Divisional to Application Number :NA
Filing Date :NA

(71)**Name of Applicant :**
**1)XITEBIO TECHNOLOGIES INC.**
Address of Applicant :3194 St. Mary's Road, Winnipeg, Manitoba R2N 4A8 Canada
(72)**Name of Inventor :**
**1)BANERJEE, MANAS RANJAN**

(57) Abstract :
A biologically pure phosphate solubilizing plant growth promoting rhizobacteria (PGPR) XSB375 was isolated from canola rhizosphere and identified as Bacillus firmus is provided herein. The PGPR is capable to solubilize phosphate that enhance plant available phosphorous. The PGPR XSB375 enhances seed germination, early emergence, plant vigor, root and shoot growth, and higher crop yield. This increased crop growth, development and yield is attributed from not only the greater phosphate solubilzation making more available phosphorus to plant but also making other essential plant nutrients more available to the plant and the like. The application of this phosphate solubilizing PGPR can be done as liquid suspension or solid materials using onto soil, potting mix, seeds, seed pieces, seedlings, foliage, carrier materials, roots and planting soil.

No. of Pages : 35 No. of Claims : 32

(12) PATENT APPLICATION PUBLICATION
(19) INDIA
(22) Date of filing of Application :18/02/2015
(21) Application No.419/KOLNP/2015 A
(43) Publication Date : 17/07/2015

(54) Title of the invention : SECURITY WINDOW APPLIED TO SINGLE WINDOW

(51) International classification :E06B5/11
(31) Priority Document No :10-2012-0095330
(32) Priority Date :30/08/2012
(33) Name of priority country :Republic of Korea
(86) International Application No :PCT/KR2013/007797
Filing Date :30/08/2013
(87) International Publication No :WO 2014/035174
(61) Patent of Addition to Application Number :NA
Filing Date :NA
(62) Divisional to Application Number :NA
Filing Date :NA

(71)**Name of Applicant :**
**1)Yi, Na Hyong**
Address of Applicant :459-2, Shin san 3-li, Gwangtan-myeon, Paju-si, Gyeonggi-do 413-852 Republic of Korea
(72)**Name of Inventor :**
**1)Yi, Na Hyong**

(57) Abstract :
The present invention relates to a security window applied to a single window. The present invention is applied to a previously installed single window so as to block an open space of the window and prevent entry by strangers and a person inside from having a falling accident. The security window can be separated from within a room as necessary, and thus movement of an object or emergency escape is facilitated. Meanwhile, the security window cannot be separated from outside the room, and thus intrusion by persons with malicious intent can be prevented from the onset.

No. of Pages : 54 No. of Claims : 8

(12) PATENT APPLICATION PUBLICATION
(19) INDIA
(22) Date of filing of Application :10/01/2014
(21) Application No.42/KOL/2014 A
(43) Publication Date : 17/07/2015

(54) Title of the invention : PERSONAL CARE COMPOSITION

| | |
|---|---|
| (51) International classification | :A61K 36/00 |
| (31) Priority Document No | :NA |
| (32) Priority Date | :NA |
| (33) Name of priority country | :NA |
| (86) International Application No | :NA |
| Filing Date | :NA |
| (87) International Publication No | : NA |
| (61) Patent of Addition to Application Number | :NA |
| Filing Date | :NA |
| (62) Divisional to Application Number | :NA |
| Filing Date | :NA |

(71)**Name of Applicant :**
**1)ITC LIMITED**
Address of Applicant :37, J.L.NEHRU ROAD, KOLKATA-700 071, West Bengal India
(72)**Name of Inventor :**
**1)SHIVAPRASAD, MANJULA TARIKERE**
**2)SUBRAMANYAM, GAYATHRI**
**3)BHASKAR, JAMES PRABHANAND**

(57) Abstract :
A personal care composition comprising the extracts of Tecomella undulata and cosmetically acceptable excipients is provided. The composition of the present invention aims at providing skin care benefits like skin ageing, antioxidant effect etc.

No. of Pages : 31 No. of Claims : 6

(12) PATENT APPLICATION PUBLICATION
(19) INDIA
(22) Date of filing of Application :09/03/2015
(21) Application No.588/KOLNP/2015 A
(43) Publication Date : 17/07/2015

(54) Title of the invention : SLIDING ELEMENT, IN PARTICULAR PISTON RING, HAVING RESISTANT COATING

(51) International classification :C23C28/00,C23C28/04,F16J9/26
(31) Priority Document No :10 2012 214 284.3
(32) Priority Date :10/08/2012
(33) Name of priority country :Germany
(86) International Application No :PCT/EP2013/065993
Filing Date :30/07/2013
(87) International Publication No :WO 2014/023615
(61) Patent of Addition to Application Number :NA
Filing Date :NA
(62) Divisional to Application Number :NA
Filing Date :NA

(71)**Name of Applicant :**
**1)FEDERAL-MOGUL BURSCHEID GMBH**
Address of Applicant :Bürgermeister-Schmidt-Str. 17, 51399 Burscheid Germany
(72)**Name of Inventor :**
**1)IVANOV, Yuriy**
**2)KENNEDY, Marcus**

(57) Abstract :
The present application relates to a sliding element, in particular a piston ring, having a coating (10) on a substrate (12), which forms at least one sliding surface of the sliding element. The coating (10) has, from the inside outwards, a carbide or nitride layer (16), then a carbide containing (preferably PVD ) TLC layer (17), then a metal free PVD TLC layer (22) and then a metal free PACVD TLC layer (18).

No. of Pages : 11 No. of Claims : 15

(12) PATENT APPLICATION PUBLICATION
(19) INDIA
(22) Date of filing of Application :09/03/2015
(21) Application No.589/KOLNP/2015 A
(43) Publication Date : 17/07/2015

(54) Title of the invention : ENGINE FOR ENERGY CONVERSION

(51) International classification :F01K27/00,F03G7/04,F03B9/00
(31) Priority Document No :61/684,206
(32) Priority Date :17/08/2012
(33) Name of priority country :U.S.A.
(86) International Application No :PCT/US2013/055151
Filing Date :15/08/2013
(87) International Publication No :WO 2014/028743
(61) Patent of Addition to Application Number :NA
Filing Date :NA
(62) Divisional to Application Number :NA
Filing Date :NA

(71)**Name of Applicant :**
**1)KIM, Seong, Woong**
Address of Applicant :165-17 33rd Avenue, Flushing, NY 11358 U.S.A.
(72)**Name of Inventor :**
**1)KIM, Seong, Woong**

(57) Abstract :
An engine (3010) for converting thermal energy to kinetic energy is provided. The engine (3010) includes a first zone (3045) and a second zone (3043) and a movable loop (3055 3057) which extends between the first zone (3045) and the second zone (3043). Cylinders (3011) are attached to the loop (3055 3057) such that the loop (3055 3057) and the cylinders (3011) are movable conjointly between the first zone (3045) and the second zone (3043). Each of the cylinders (3011) is adapted to receive a varying amount of a working fluid therein and is adapted to be in a plurality of states including a first state in which it contains a first amount of the working fluid and a second sate in which it contains a second amount of the working fluid the first amount being greater than the second amount. Each of the cylinders (3011) is caused to be in its first state as it moves through the first zone (3045) and in its second state as it moves through the second zone (3043) so as to impart motion to the loop (3055 3057).

No. of Pages : 47 No. of Claims : 30

(12) PATENT APPLICATION PUBLICATION
(19) INDIA
(22) Date of filing of Application :16/03/2015
(21) Application No.710/KOLNP/2015 A
(43) Publication Date : 17/07/2015

(54) Title of the invention : MACHINE FOR THE THERMAL TREATMENT OF BULK MATERIAL

(51) International classification :F27B21/06,F27D99/00,F27B21/08
(31) Priority Document No :NA
(32) Priority Date :NA
(33) Name of priority country :NA
(86) International Application No :PCT/EP2012/069845
Filing Date :08/10/2012
(87) International Publication No :WO 2014/056519
(61) Patent of Addition to Application Number :NA
Filing Date :NA
(62) Divisional to Application Number :NA
Filing Date :NA

(71)**Name of Applicant :**
**1)OUTOTEC (FINLAND) OY**
Address of Applicant :Rauhalanpuisto 9, FI-02230 Espoo Finland
(72)**Name of Inventor :**
**1)SCHULAKOW-KLASS, ANDREJ**
**2)MANTHEY, PIERRE**
**3)SCHMIDT, EUGEN**
**4)BRUDNYJ, EDGAR**

(57) Abstract :
This invention relates to a machine for the thermal treatment of bulk material, in particular a sintering or pelletizing machine comprising a travelling grate (4) with a plurality of pallet cars (3), that are conveyed through at least one treatment station for effecting the thermal treatment of the bulk material, and a sealing structure sealing the pallet cars (3) against the machine, wherein the sealing structure comprises a spring loaded sealing strip (15) contacting a planar sealing surface (16, 20). It is provided that the sealing strip (15) is held by a leaf spring element (13) biasing the sealing strip (15) against the sealing surface (16, 20).

No. of Pages : 18 No. of Claims : 9

(12) PATENT APPLICATION PUBLICATION
(19) INDIA
(22) Date of filing of Application :14/12/2011
(21) Application No.1551/KOL/2011 A
(43) Publication Date : 17/07/2015

(54) Title of the invention : HADFIELD STEEL AND METHOD FOR OBTAINING THE SAME

(51) International classification :C22C38/04
(31) Priority Document No :NA
(32) Priority Date :NA
(33) Name of priority country :NA
(86) International Application No :NA
Filing Date :NA
(87) International Publication No : NA
(61) Patent of Addition to Application Number :NA
Filing Date :NA
(62) Divisional to Application Number :NA
Filing Date :NA

(71)**Name of Applicant :**
**1)FUNDACION TECNALIA RESEARCH & INNOVATION**
Address of Applicant :PARQUE TECNOLÖGICO DE SAN SEBASTIÁN - MIKELETEGI PASALEKUA, 2 20009 SAN SEBASTIAN (GUIPÚZCOA0) SPAIN
(72)**Name of Inventor :**
**1)CABALLERO OGUIZA, PATRICIA**

(57) Abstract :
The present invention relates to Hadfield steel and method for obtaining the same, which steel has better mechanical properties than basic Hadfield steel, 5 without detriment to any of them, which has a homogenous grain size distribution, thus allowing new applications, having the following chemical composition: 0.90 to 1.35% by weight of C, 11.00 to 14.00% by weight of Mn, 0.80% maximum by weight of Si, 10 0.07% maximum by weight of P, 0.05% maximum by weight ofS and an amount of hafnium greater than or equal to 0.01 % and less than 0.1% by weight, the rest being iron and impurities associated with iron, and where the percentages are expressed by weight with respect to the total weight of the steel.

No. of Pages : 11 No. of Claims : 4

(12) PATENT APPLICATION PUBLICATION
(19) INDIA
(22) Date of filing of Application :20/02/2015
(21) Application No.448/KOLNP/2015 A
(43) Publication Date : 17/07/2015

(54) Title of the invention : AUTOMATIC INJECTION DEVICE

(51) International classification :A61M5/20,A61M5/32,A61M5/46
(31) Priority Document No :1250934-5
(32) Priority Date :20/08/2012
(33) Name of priority country :Sweden
(86) International Application No :PCT/EP2013/066542
Filing Date :07/08/2013
(87) International Publication No :WO 2014/029621
(61) Patent of Addition to Application Number :NA
Filing Date :NA
(62) Divisional to Application Number :NA
Filing Date :NA

(71)**Name of Applicant :**
**1)CAREBAY EUROPE LTD**
Address of Applicant :Suite 3, Tower Business Centre, Tower Street, Swatar, BKR 4013 Malta
(72)**Name of Inventor :**
**1)HÖGDAHL, Stefan**

(57) Abstract :
The present invention relates to a medicament injection device (100) arranged to receive a replaceable container subassembly (103) The medicament injection device (100) comprises a front housing (102) and a rear housing (101) releasably connectable to each other. A reloadable drive mechanism (108) is accommodated in the rear housing (101) for acting on the plunger (14) of a replaceable container subassembly (103) for expelling medicament. A needle hider front is slidably arranged within the front housing. A needle shield remover (109) is arranged to connect with a needle shield of the replaceable container subassembly, wherein the needle shield remover is arranged to be removably inserted into a proximal end of the front housing through the needle hider front. The needle shield remover is adapted to be used to interact with the reloadable drive mechanism accommodated in the rear housing such that a user can reload the drive mechanism.

No. of Pages : 28 No. of Claims : 13

(12) PATENT APPLICATION PUBLICATION
(19) INDIA
(22) Date of filing of Application :24/02/2015
(21) Application No.482/KOLNP/2015 A
(43) Publication Date : 17/07/2015

(54) Title of the invention : FUEL SUPPLY CONTROLLING DEVICE FOR PRECHAMBER GAS ENGINES

(51) International classification :F02B19/12,F02D19/02,F02D41/02
(31) Priority Document No :2013-060683
(32) Priority Date :22/03/2013
(33) Name of priority country :Japan
(86) International Application No :PCT/JP2014/001139
Filing Date :03/03/2014
(87) International Publication No :WO 2014/147978
(61) Patent of Addition to Application Number :NA
Filing Date :NA
(62) Divisional to Application Number :NA
Filing Date :NA

(71)**Name of Applicant :**
**1)KAWASAKI JUKOGYO KABUSHIKI KAISHA**
Address of Applicant :1-1, Higashikawasaki-cho 3-chome, Chuo-ku, Kobe-shi, Hyogo 650-8670 Japan
(72)**Name of Inventor :**
**1)MIYAMOTO, Sekai**
**2)IWASAKI, Hidekazu**
**3)NISHIMURA, Motohiko**
**4)NONAKA, Yosuke**

(57) Abstract :
A fuel supply controlling device (100) comprises a prechamber fuel supply valve (18) that supplies gas fuel to a prechamber (24) a check valve (19) that is disposed between the prechamber fuel supply valve (18) and the prechamber (24) and prevents back flow from the prechamber (24) a valve state detecting device (51) that detects the operational state of the check valve (19) a rotational angle detecting device (56) that detects the rotational angle in the engine cycle and a controlling device (60) that determines the operational command value of the prechamber fuel supply valve (18). The controlling device (60) measures on the basis of a signal from the valve state detecting device (51) and the rotational angle detecting device (56) the actual operating state of the check valve (19) and by associating the same to a rotational angle and corrects the operational command value for the prechamber fuel supply valve (18) so that the measured actual operating state approaches the target operating state.

No. of Pages : 47 No. of Claims : 6

(12) PATENT APPLICATION PUBLICATION
(19) INDIA
(22) Date of filing of Application :16/03/2015
(21) Application No.708/KOLNP/2015 A
(43) Publication Date : 17/07/2015

(54) Title of the invention : DRUM FOR MAGNETIC SEPARATOR AND RELEVANT PRODUCTION METHOD

(51) International classification :B03C1/14
(31) Priority Document No :MI2012A001901
(32) Priority Date :08/11/2012
(33) Name of priority country :Italy
(86) International Application No :PCT/IB2013/059749
Filing Date :29/10/2013
(87) International Publication No :WO 2014/072880
(61) Patent of Addition to Application Number :NA
Filing Date :NA
(62) Divisional to Application Number :NA
Filing Date :NA

(71)**Name of Applicant :**
**1)SGM GANTRY S.P.A.**
Address of Applicant :Via Leno 2/D, I-25025 Manerbio BS Italy
(72)**Name of Inventor :**
**1)MOLTENI, DANILO**

(57) Abstract :
In a drum for magnetic separator comprising a cylinder (C) of ferromagnetic material on the outside of which there are formed a plurality of longitudinal grooves (6) housing permanent magnets (7) arranged in longitudinal rows along a magnetic arc of 130°-160° with alternate N-S polarity, the cylinder (C) being located within a shell (M) of nonmagnetic material, the length (D) of the single dipole of the magnetic circuit is comprised in a range between 100 and 150 mm so as to provide a substantially homogeneous magnetic field along the whole magnetic arc thanks to the limited length (D) of the dipole which results in a sinusoidal pattern of very limited amplitude and therefore with nominal values of the magnetic field that are present over almost 100% of the magnetic arc.

No. of Pages : 12 No. of Claims : 11

(12) PATENT APPLICATION PUBLICATION
(19) INDIA
(22) Date of filing of Application :25/02/2015
(21) Application No.491/KOLNP/2015 A
(43) Publication Date : 17/07/2015

(54) Title of the invention : METHOD AND SYSTEM FOR SIMPLIFIED KNOWLEDGE ENGINEERING

(51) International classification :G06F9/44
(31) Priority Document No :61/703,270
(32) Priority Date :20/09/2012
(33) Name of priority country :U.S.A.
(86) International Application No :PCT/US2013/057379
Filing Date :29/08/2013
(87) International Publication No :WO 2014/046861
(61) Patent of Addition to Application Number :NA
Filing Date :NA
(62) Divisional to Application Number :NA
Filing Date :NA

(71)**Name of Applicant :**
**1)IFWIZARD CORPORATION**
Address of Applicant :760 Sw Madison, Suite 200, Corvallis, OR 97333 U.S.A.
(72)**Name of Inventor :**
**1)SELLERS-BLAIS, Dominic**

(57) Abstract :
A system and method is disclosed for knowledge engineering using a computerized graphical editor to manage and create knowledge based systems containing a navigable graph of modal pages with conditional content and user interface knowledge. The invention enables the entire knowledge engineering workflow to be performed within a non technical graphical environment and without requiring a computer programming or mathematical background. Further, the presentation of knowledge as modal pages allows for simple ontological discovery and end user player operation. Once editing is complete the method allows for the set of pages, variables, and settings of which the knowledge based system is composed to be exported into an independently executable knowledge, based system player containing an embedded inference engine.

No. of Pages : 41 No. of Claims : 29

(12) PATENT APPLICATION PUBLICATION
(21) Application No.599/KOLNP/2015 A
(19) INDIA
(22) Date of filing of Application :09/03/2015
(43) Publication Date : 17/07/2015

(54) Title of the invention : COLD-ROLLED STEEL SHEET WITH SUPERIOR SHAPE FIXABILITY AND MANUFACTURING METHOD THEREFOR

(51) International classification :C22C38/14,C22C38/32,C21D8/02
(31) Priority Document No :NA
(32) Priority Date :NA
(33) Name of priority country :NA
(86) International Application No :PCT/JP2012/006532
Filing Date :11/10/2012
(87) International Publication No :WO 2014/057519
(61) Patent of Addition to Application Number :NA
Filing Date :NA
(62) Divisional to Application Number :NA
Filing Date :NA

(71)**Name of Applicant :**
**1)JFE STEEL CORPORATION**
Address of Applicant :2-3, Uchisaiwai-cho 2-chome, Chiyoda-ku, Tokyo 1000011 Japan
(72)**Name of Inventor :**
**1)KIZU, Taro**
**2)FUJITA, Koichiro**
**3)KOGA, Hideharu**
**4)MORIKAWA, Masahide**
**5)TAHARA, Kenji**

(57) Abstract :
Provided is a cold-rolled steel sheet with superior shape fixability and a manufacturing method therefor. On a steel raw material having a composition comprising, in mass% C: 0.0010- 0.0030%, Si: 0.05% or less, Mn: 0.1 0.5%, Ti: 0.021 0.060%, B: 0.0005 0.0050%, and containing B and C so that B/C is 0.5 or more, are performed: a hot rolling process for finish rolling with a finish rolling completion temperature of 870 950°C and winding at a winding temperature of 450 630°C; a cold rolling process with a cold rolling reduction of 90% or less; and, after the cold rolling process, an annealing process for heating to a soaking temperature in the range of 700 850°C at an average heating rate of 1 30°C/sec in the temperature range of 600°C and above, and, after holding for 30 200 sec, cooling to the temperature range of 600°C with a cooling rate averaging 3°C/sec or more. Obtained thereby is a cold rolled steel sheet with superior shape fixability, the sheet having a structure wherein the main constituent is ferrite with a mean particle diameter of 10 30 µm and the proportional limit is 100 MPa or less.

No. of Pages : 42 No. of Claims : 20

(12) PATENT APPLICATION PUBLICATION
(19) INDIA
(22) Date of filing of Application :12/03/2015
(21) Application No.661/KOLNP/2015 A
(43) Publication Date : 17/07/2015

(54) Title of the invention : MEDIUM VOLTAGE DC COLLECTION SYSTEM WITH POWER ELECTRONICS

(51) International classification :H02J3/36,H02J3/38,H02M3/22
(31) Priority Document No :61/708,144
(32) Priority Date :01/10/2012
(33) Name of priority country :U.S.A.
(86) International Application No :PCT/US2013/062089
Filing Date :27/09/2013
(87) International Publication No :WO 2014/055333
(61) Patent of Addition to Application Number :NA
Filing Date :NA
(62) Divisional to Application Number :NA
Filing Date :NA

(71)**Name of Applicant :**
**1)ABB RESEARCH LTD**
Address of Applicant :Affolternstrasse 44, CH-8050 Zurich Switzerland
(72)**Name of Inventor :**
**1)KIM, Hongrae**
**2)LI, Jun**
**3)WANG, Zhenyuan**
**4)CARR, Joseph, A.**
**5)AELOIZA, Eddy, C.**
**6)TREMELLING, Darren, D.**

(57) Abstract :
A power generation system (10) includes at least one generator (12) that generates a medium voltage direct current that has a positive DC voltage output (50A) and a negative DC voltage output (52B). The system also provides a medium voltage DC (MVDC) cable system (66) with a positive pole cable (62) and a negative pole cable (64), wherein the positive pole cable is connected to the positive DC voltage output and the negative pole cable is connected to the negative DC voltage output. A substation (110) is connected to the MVDC cable system and includes at least one DC/DC step-up converter (114) to step up the medium voltage direct current to a high voltage direct current (HVDC).

No. of Pages : 16 No. of Claims : 12

(12) PATENT APPLICATION PUBLICATION
(19) INDIA
(22) Date of filing of Application :17/01/2014
(21) Application No.72/KOL/2014 A
(43) Publication Date : 17/07/2015

(54) Title of the invention : AN INDEXING AND CLAMPING FIXTURE FOR DRILLING OPERATION ON TAPER SURFACE OF CORE PRESS RING OF ALL TYPES OF TURBO GENERATORS AND THE PROCESS FOR THE SAME

| | |
|---|---|
| (51) International classification | :A61C 8/00 |
| (31) Priority Document No | :NA |
| (32) Priority Date | :NA |
| (33) Name of priority country | :NA |
| (86) International Application No | :NA |
| Filing Date | :NA |
| (87) International Publication No | : NA |
| (61) Patent of Addition to Application Number | :NA |
| Filing Date | :NA |
| (62) Divisional to Application Number | :NA |
| Filing Date | :NA |

(71)**Name of Applicant :**
**1)BHARAT HEAVY ELECTRICALS LIMITED**
Address of Applicant :REGIONAL OPERATIONS DIVISION (ROD),PLOT:9/1,DJ BLOCK, 3RD FLOOR, KARUNAMOYEE,SALT LAKE CITY, KOLKATA-700091 West Bengal India
(72)**Name of Inventor :**
**1)KARAN SINGH**
**2)MANKESH MEENA**

(57) Abstract :
The invention relates to an indexing and clamping fixture for drilling operation on taper surface of core press ring of all types of turbo generators and the process for the same. The fixture comprises of a plurality of cross arms (6), a plurality of taper seat (1), a plurality of threaded holes (2,4,5) , a plurality of adjustable slot carrier (3) and a plurality of adjustable slot (7). The taper seat (1) of the fixture accommodates the taper part of the core press ring. The fixture is placed on a rotary table. The taper seat has 15 degree taper. The rotary table is rotated to make the taper face of the job horizontal for drilling of one hole. For drilling of next hole, the rotary table is manually rotated.

No. of Pages : 16 No. of Claims : 4

(12) PATENT APPLICATION PUBLICATION
(19) INDIA
(22) Date of filing of Application :20/02/2015
(21) Application No.452/KOLNP/2015 A
(43) Publication Date : 17/07/2015

(54) Title of the invention : CORRECTLY FOLDED ETANERCEPT IN HIGH PURITY AND EXCELLENT YIELD

(51) International classification :A61K38/16
(31) Priority Document No :61/699,552
(32) Priority Date :11/09/2012
(33) Name of priority country :U.S.A.
(86) International Application No :PCT/US2013/058994
Filing Date :10/09/2013
(87) International Publication No :WO 2014/043103
(61) Patent of Addition to Application Number :NA
Filing Date :NA
(62) Divisional to Application Number :NA
Filing Date :NA

(71)**Name of Applicant :**
**1)COHERUS BIOSCIENCES, INC.**
Address of Applicant :201 Redwood Shores Parkway, Suite 200, Redwood City, CA U.S.A.
(72)**Name of Inventor :**
**1)ARAKAWA, Tsutomu**
**2)FARRAR, Douglas**

(57) Abstract :
A mixed mode chromatography method for separating correctly folded from incorrectly folded conformations of a given protein is provided. The method is highly effective in separating correctly folded etanercept from incorrectly folded etanercept and aggregates in commercially attractive yields capable of affording etanercept preparations having very high purity in terms of correctly folded etanercept versus incorrectly folded etanercept. The invention is further directed to protein preparations and formulations comprising correctly folded proteins obtained using the present methods, and methods of treatment using the high purity preparations obtained from the mixed mode method.

No. of Pages : 98 No. of Claims : 31

(12) PATENT APPLICATION PUBLICATION
(19) INDIA
(22) Date of filing of Application :16/03/2015
(21) Application No.705/KOLNP/2015 A
(43) Publication Date : 17/07/2015

(54) Title of the invention : A METHOD IN A WIRELESS COMMUNICATION TERMINAL THAT COMMUNICATES IN AN ORTHOGONAL FREQUENCY-DIVISION MULTIPLEXING (OFDM) WIRELESS COMMUNICATION NETWORK

(51) International classification :H04L 27/26
(31) Priority Document No :11/210939
(32) Priority Date :24/08/2005
(33) Name of priority country :U.S.A.
(86) International Application No :PCT/US2006/026657
Filing Date :05/07/2006
(87) International Publication No :WO/2007/024352
(61) Patent of Addition to Application Number :NA
Filing Date :NA
(62) Divisional to Application Number :295/KOLNP/2008
Filed on :21/01/2008

(71)**Name of Applicant :**
**1)MOTOROLA MOBILITY, INC.**
Address of Applicant :600 NORTH US HIGHWAY 45, LIBERTYVILLE, IL 60048 U.S.A.
(72)**Name of Inventor :**
**1)BAUM, KEVIN, L**
**2)SARTORI, PHILIPPE, J.**
**3)CLASSON, BRIAN, K**
**4)CUDAK, MARK, CONRAD**
**5)LOVE, ROBERT T.**
**6)NANGIA, VIJAY**

(57) Abstract :
A method in a wireless communication terminal that communicates in an orthogonal frequency-division multiplexing (OFDM) wireless communication network is disclosed. The method is characterized by: receiving, at the wireless communication terminal, a resource assignment in a control channel on a common frequency channel during a time interval; determining whether the resource assignment is a frequency selective (FS) frequency resource or a frequency non- selective (ENS) frequency resource as indicated in a resource assignment type field in the resource assignment, the resource assignment of the FS frequency resource including at least two contiguous sub-channels, the resource assignment of the FNS frequency resource including a resource sub-channel assignment identifying a starting sub-channel assigned to the wireless communication terminal, a number of sub-channels assigned to the wireless communication terminal, and a sub-channel skip factor for the wireless communication terminal wherein at least two of the sub-channels assigned are non-contiguous in frequency, wherein each sub-channel includes at least two contiguous sub-carriers and at least two contiguous symbols; and communicating data on the sub-channels assigned to the wireless communication terminal.

No. of Pages : 24 No. of Claims : 16

(12) PATENT APPLICATION PUBLICATION
(19) INDIA
(22) Date of filing of Application :16/03/2015
(21) Application No.706/KOLNP/2015 A
(43) Publication Date : 17/07/2015

(54) Title of the invention : GAS BURNER

(51) International classification :F23D14/06
(31) Priority Document No :NA
(32) Priority Date :NA
(33) Name of priority country :NA
(86) International Application No :PCT/IB2012/002148
Filing Date :26/10/2012
(87) International Publication No :WO 2014/064481
(61) Patent of Addition to Application Number :NA
Filing Date :NA
(62) Divisional to Application Number :NA
Filing Date :NA

(71)**Name of Applicant :**
**1)SABAF S.P.A.**
Address of Applicant :Via dei Carpini, 1, 25035 Ospitaletto (BS) Italy
(72)**Name of Inventor :**
**1)DORA, MASSIMO**

(57) Abstract :
Gas burner (1) of the type comprising at least two flame spreaders (2, 3), at least one diffusion chamber (4) obtained between said at least two flame spreaders for the diffusion of a primary air/gas mixture for at least one of said at least two flame spreaders, and at least one cross lighting duct (5) for the flame passage between said at least two flame spreaders, said at least one duct (5) being disposed transversally inside said at least one diffusion chamber (4) so that to define a first (6) and a second (7) region in said at least one diffusion chamber (4) and comprising two side walls (9,10) and one upper wall (11), for the fluidic direct connection between said first and said second region of said at least one diffusion chamber said upper wall being provided with at least one hole for the mixture inflow into said duct (5) characterized in that said at least one cross lighting duct (5) comprises at least one lower opening (30) facing said upper wall (8) of the cross lighting duct (5).

No. of Pages : 20 No. of Claims : 18

(12) PATENT APPLICATION PUBLICATION
(19) INDIA
(22) Date of filing of Application :11/09/2014
(21) Application No.928/KOL/2014 A
(43) Publication Date : 17/07/2015

(54) Title of the invention : ELECTRIC MOTOR

(51) International classification :H02K1/22
(31) Priority Document No :201310416203.4
(32) Priority Date :12/09/2013
(33) Name of priority country :China
(86) International Application No :NA
Filing Date :NA
(87) International Publication No : NA
(61) Patent of Addition to Application Number :NA
Filing Date :NA
(62) Divisional to Application Number :NA
Filing Date :NA

(71)**Name of Applicant :**
**1)JOHNSON ELECTRIC S.A.**
Address of Applicant :BAHNHOFSTRASSE 18, CH-3280 MURTEN Switzerland
(72)**Name of Inventor :**
**1)LAM KAR WAI**
**2)ZHANG CAI YONG**

(57) Abstract :
A stator includes a housingmade of magnetically conductive material, a plurality of magnetsfixed to the stator housing; and a magnet holderattached to one end of the housing for fixing the magnets to the stator housing. The magnet holder includes a bodyand a plurality of locking structures extending from the body. Each magnet is locked between two adjacent locking structures. A plurality of cut-outsis formed in the stator housing, and a plurality of projectionsis formed on the body of the magnet holder and engaged with the cut-outs. Each locking structure includes a wedge-shaped inner end inwardly abutting against respective magnets to prevent the magnets from moving inwardly.

No. of Pages : 23 No. of Claims : 17

(12) PATENT APPLICATION PUBLICATION
(19) INDIA
(22) Date of filing of Application :20/02/2015
(21) Application No.449/KOLNP/2015 A
(43) Publication Date : 17/07/2015

(54) Title of the invention : METHOD OF ADJUVANT CANCER TREATMENT

(51) International classification :A61K31/519,A61K31/506,A61P35/00
(31) Priority Document No :61/696,375
(32) Priority Date :04/09/2012
(33) Name of priority country :U.S.A.
(86) International Application No :PCT/US2013/057432
Filing Date :30/08/2013
(87) International Publication No :WO 2014/039375
(61) Patent of Addition to Application Number :NA
Filing Date :NA
(62) Divisional to Application Number :NA
Filing Date :NA

(71)**Name of Applicant :**
**1)GLAXOSMITHKLINE LLC**
Address of Applicant :Corporation Service Company 2711 Centerville Road, Suite 400 Wilmington, New Castle, Delaware 190808 U.S.A.
(72)**Name of Inventor :**
**1)LAQUERRE, Sylvie**
**2)LEBOWITZ, Peter F.**

(57) Abstract :
The present invention provides a method of providing adjuvant treatment to a human patient which comprises administering to such a patient therapeutically effective doses of debrafenib and trametinib for a time period sufficient to increase relapse free survival (RFS).

No. of Pages : 21 No. of Claims : 8

(12) PATENT APPLICATION PUBLICATION
(21) Application No.481/KOLNP/2015 A
(19) INDIA
(22) Date of filing of Application :24/02/2015
(43) Publication Date : 17/07/2015

(54) Title of the invention : METHOD FOR DRIVING EMERGENCY GENERATOR USING ENERGY STORAGE SYSTEM

(51) International classification :H02J9/06,H02J7/00
(31) Priority Document No :10-2012-0082737
(32) Priority Date :27/07/2012
(33) Name of priority country :Republic of Korea
(86) International Application No :PCT/KR2013/006785
Filing Date :29/07/2013
(87) International Publication No :WO 2014/017881
(61) Patent of Addition to Application Number :NA
Filing Date :NA
(62) Divisional to Application Number :NA
Filing Date :NA

(71)**Name of Applicant :**
**1)HYOSUNG CORPORATION**
Address of Applicant :(Gongdeok dong),119, Mapo-daero, Mapo-gu, Seoul, 121-720 Republic of Korea
(72)**Name of Inventor :**
**1)SEO, Young Ger**
**2)LEE, Jeong-Min**
**3)LEE, Jin Hee**

(57) Abstract :
The present invention relates to a method for driving an emergency generator using an energy storage system wherein the energy storage system adjusts a load amount when power of the emergency generator is supplied so as to drive the emergency generator at maximum efficiency. To this end the method for driving the emergency generator according to the present invention comprises the steps of: adjusting a load amount with prestored power in the energy storage system until the emergency generator reaches a preset maximum efficient driving state after the power of the emergency generator has been supplied; and maintaining the driving operation in the maximum efficient driving state when the emergency generator reaches the preset maximum efficient driving state.

No. of Pages : 22 No. of Claims : 4

(12) PATENT APPLICATION PUBLICATION
(19) INDIA
(22) Date of filing of Application :16/03/2015
(21) Application No.701/KOLNP/2015 A
(43) Publication Date : 17/07/2015

(54) Title of the invention : COAXIAL LOUDSPEAKER ARRANGEMENT

(51) International classification :H04R1/24,H04R9/02,H04R9/04
(31) Priority Document No :P1200534
(32) Priority Date :17/09/2012
(33) Name of priority country :Hungary
(86) International Application No:PCT/HU2013/000094
Filing Date :16/09/2013
(87) International Publication No :WO 2014/045070
(61) Patent of Addition to Application Number :NA
Filing Date :NA
(62) Divisional to Application Number :NA
Filing Date :NA

(71)**Name of Applicant :**
**1)MAGYAR INNOVÁCIÓS SZÖVETSÉG**
Address of Applicant :Árpád fejedelem útja 79., H-1036 Budapest Hungary
**2)NOVINEX INNOVÁCIÖ- ÉS KUTATÁS-HASZNOSITÓ IRODA**
**3)PAPP, Gergely**
(72)**Name of Inventor :**
**1)PAPP, Gergely**

(57) Abstract :
Coaxial loudspeaker arrangement with an outer diaphragm (21) for operating in a lower frequency range, an inner diaphragm (23) for operating in a higher frequency range, both located in a common loudspeaker frame (10), with an outer voice coil (22) connected to the outer diaphragm (21), an inner voice coil (24) connected to the inner diaphragm (23), two coaxially arranged magnets (31, 32), and ferrite cores (41, 42, 43) in association with the magnets, wherein the voice coils (22, 24) extend into air gaps (51, 52) between the ferrite cores, and the diaphragms are connected to the loudspeaker frame (10) through flexible suspending elements (1 1-14). In the proposed loudspeaker, an inner core (41) and an outer core (42) separated from each other by an inner air gap (52), is located between an outer magnet (31) and an inner magnet (32); one ferrite core (43a) of the outer magnet (31 ) is separated by an outer air gap (51) from the outer core (42) located between the two magnets, wherein the voice coil (22) of the outer diaphragm (21) extends into the outer air gap (51) and the voice coil (24) of the inner diaphragm (23) extends into the inner air gap (52).

No. of Pages : 19 No. of Claims : 15

(12) PATENT APPLICATION PUBLICATION
(19) INDIA
(22) Date of filing of Application :16/03/2015
(21) Application No.702/KOLNP/2015 A
(43) Publication Date : 17/07/2015

(54) Title of the invention : ADMINISTRATION OF ACETYLCHOLINESTERASE INHIBITORS TO MITIGATE NEUROTOXIN-INDUCED PARALYSIS AND RESIDUAL NEUROMUSCULAR BLOCKADE

| | |
|---|---|
| (51) International classification | :A61K31/14,A61K31/27,A61K31/46 |
| (31) Priority Document No | :61/743,705 |
| (32) Priority Date | :10/09/2012 |
| (33) Name of priority country | :U.S.A. |
| (86) International Application No | :PCT/US2013/058640 |
| Filing Date | :06/09/2013 |
| (87) International Publication No | :WO 2014/039920 |
| (61) Patent of Addition to Application Number | :NA |
| Filing Date | :NA |
| (62) Divisional to Application Number | :NA |
| Filing Date | :NA |

(71)**Name of Applicant :**
**1)OPHIREX, INC.**
Address of Applicant :5643 Paradise Drive #2, Corte Madera, CA 94925 U.S.A.
(72)**Name of Inventor :**
**1)LEWIN, MATTHEW, R.**

(57) Abstract :
Methods and kits for treating or reducing the likelihood of neurotoxin induced respiratory failure in a subject, such as a victim of neurotoxic envenomation are provided. Also provided are methods for treating or reducing the likelihood of residual neuromuscular blockade in a subject to whom a nondepolarizing neuromuscular blocking agent has been administered. The methods involve administering a pharmaceutically effective dose of an acetylcholinesterase inhibitor to the subject where the administration is not via injection. In some embodiments intra nasal or ocular administration is used.

No. of Pages : 53 No. of Claims : 33

(12) PATENT APPLICATION PUBLICATION
(19) INDIA
(22) Date of filing of Application :10/09/2014
(21) Application No.926/KOL/2014 A
(43) Publication Date : 17/07/2015

(54) Title of the invention : AIR COMPRESSOR

(51) International classification :F04B35/00
(31) Priority Document No :102133296
(32) Priority Date :13/09/2013
(33) Name of priority country :Taiwan
(86) International Application No :NA
Filing Date :NA
(87) International Publication No : NA
(61) Patent of Addition to Application Number :NA
Filing Date :NA
(62) Divisional to Application Number :NA
Filing Date :NA

(71)**Name of Applicant :**
**1)JHOU, WEN-SAN**
Address of Applicant :NO.1-25, KANGWEI, AN-DIN DIST, TAINAN CITY, TAIWAN, R.O.C.
(72)**Name of Inventor :**
**1)JHOU, WEN-SAN**

(57) Abstract :
An air compressor having a pen pressure gauge and an is disclosed and provided for measuring the change of a pressure value as well as releasing air when the pressure value is greater than a predetermined maximum safety value, so as to achieve the safety effect without installing an additional safety value and prevent damages to an inflated object.

No. of Pages : 16 No. of Claims : 14

(12) PATENT APPLICATION PUBLICATION
(19) INDIA
(22) Date of filing of Application :10/01/2014
(21) Application No.44/KOL/2014 A
(43) Publication Date : 17/07/2015

(54) Title of the invention : AN IMPROVED HIGH PRESSURE OIL HEADER WITH SUBMERGED LEAKAGE OIL DISCHARGE FOR BLADE TURNING MECHANISM OF KAPLAN TURBINES

| | |
|---|---|
| (51) International classification | :F03B 3/00 |
| (31) Priority Document No | :NA |
| (32) Priority Date | :NA |
| (33) Name of priority country | :NA |
| (86) International Application No | :NA |
| Filing Date | :NA |
| (87) International Publication No | : NA |
| (61) Patent of Addition to Application Number | :NA |
| Filing Date | :NA |
| (62) Divisional to Application Number | :NA |
| Filing Date | :NA |

(71)**Name of Applicant :**
**1)BHARAT HEAVY ELECTRICALS LIMITED**
Address of Applicant :REGION CAL OPERATIONS DIVISION(ROD), PLOT NO:9/1, DJ BLOCK 3RD FLOOR KARUNAMOYEE, SALTLAKE CITY, KOLKATA-700091, HAVING ITS REGISTERED OFFICE AT BHEL HOUSE, SIRI FORT, NEW DELHI - 110049, INDIA.
(72)**Name of Inventor :**
**1)KARRI PRASAD**
**2)GURPREET SINGH**

(57) Abstract :
The invention relates to an improved high pressure Oil Header with submerged leakage oil discharge for blade turning mechanism of Kaplan turbines, the oil header (10) mounted on the top shaft of the generator to supply high pressure oil to a runner servomotor through a plurality of concentric metallic tubes (9) rotating in registration with the rotation of the turbine blades, the rotating tubes acting as a continuous oil passage from the generator up to a servo chamber disposed inside the (12, 13, 14) with sealing means provided to allow efficient operation of blade movement and minimize oil leakage, the improvement is characterized in that a first plurality of throttle grooves to minimize oil leakage constructed on the bearing bushes (12, 13, 14) extending till a location where a relief chamber (15) is provided for oil bleed off tapping (16) to relieve oil pressure; a second plurality of throttle groove provided after the bleed off (16) to ensure both reduction in oil pressure and minimization of oil leakage one each oil chamber (18, 21) provided respectively at top and bottom bush ends (12, 14) to allow the pressurized leakage oil jets to be submerged instead of directly discharged to the atmospheric air; multiple divergent and angular exit grooves (20) in a direction opposite to the rotational direction of the turbine blades are configured on an end relief groove (19) formed beyond the second plurality of throttle grooves to ensure exit of leaking oil at a low velocity.

No. of Pages : 22 No. of Claims : 1

(12) PATENT APPLICATION PUBLICATION
(19) INDIA
(22) Date of filing of Application :10/03/2015
(21) Application No.623/KOLNP/2015 A
(43) Publication Date : 17/07/2015

(54) Title of the invention : IMPROVED EXHAUST GAS RECIRCULATION APPARATUS AND METHOD FOR FORMING SAME

(51) International classification :F02M25/07,F02B47/08,F01N3/04
(31) Priority Document No :13/605,896
(32) Priority Date :06/09/2012
(33) Name of priority country :U.S.A.
(86) International Application No :PCT/US2013/058032
Filing Date :04/09/2013
(87) International Publication No :WO 2014/039538
(61) Patent of Addition to Application Number :NA
Filing Date :NA
(62) Divisional to Application Number :NA
Filing Date :NA

(71)**Name of Applicant :**
**1)SENIOR IP GMBH**
Address of Applicant :Fronwagplatz 10, CH-8200 Schaffhausen Switzerland
(72)**Name of Inventor :**
**1)COLLINS, Ryan**
**2)MURPHY, Michael**
**3)WALSH, Timothy Maurice**

(57) Abstract :
An exhaust gas recirculation cooler for internal combustion engines and a method of forming same. One or more cooler tubes incorporate a flexible section, comprised of one or more integrally formed convolutions, with a tube and fin architecture. The exhaust gas recirculation cooler provides thermal compensation, on a per- tube basis, with the flexible sections of the one or more cooler tubes individually displacing upon the thermal expansion of any of the respective tubes.

No. of Pages : 23 No. of Claims : 16

(12) PATENT APPLICATION PUBLICATION
(21) Application No.624/KOLNP/2015 A
(19) INDIA
(22) Date of filing of Application :10/03/2015
(43) Publication Date : 17/07/2015

(54) Title of the invention : METHODS OF PROCESSING POTASSIUM SULFATE AND MAGNESIUM SULFATE, AND RELATED SYSTEMS

(51) International classification :C01F5/40,C01D1/00
(31) Priority Document No :61/699,917
(32) Priority Date :12/09/2012
(33) Name of priority country :U.S.A.
(86) International Application No :PCT/US2013/059040
Filing Date :10/09/2013
(87) International Publication No :WO 2014/043118
(61) Patent of Addition to Application Number :NA
Filing Date :NA
(62) Divisional to Application Number :NA
Filing Date :NA

(71)**Name of Applicant :**
**1)INTERCONTINENTAL POTASH CORPORATION**
Address of Applicant :600 West Bender Blvd., Hobbs, NM 88240-2287 U.S.A.
(72)**Name of Inventor :**
**1)CHASTAIN, Steven, L.**
**2)MORRISON, Michael, J.**
**3)CHASTAIN, Richard, W.**
**4)FELTON, Donial, M.**
**5)NEUMAN, Thomas, H.**

(57) Abstract :
Methods of processing an aqueous solution comprising potassium sulfate and magnesium sulfate include crystallizing K2SO4, crystallizing recycle crystals, and mixing at least a portion of the recycle crystals with the aqueous solution. Systems for processing potassium sulfate and magnesium sulfate include a first crystallizer and a second crystallizer in fluid communication with the second mix tank. The second crystallizer is structured and adapted to precipitate recycle crystals from the concentrated liquor to form a potassium-depleted recycle brine. The recycle crystals precipitated in the second crystallizer have a composition suitable to be recycled to the first crystallizer to increase the production of SOP.

No. of Pages : 57 No. of Claims : 27

(12) PATENT APPLICATION PUBLICATION
(21) Application No.981/KOL/2014 A
(19) INDIA
(22) Date of filing of Application :24/09/2014
(43) Publication Date : 17/07/2015

(54) Title of the invention : SADDLE RIDING TYPE VEHICLE

| | | |
|---|---|---|
| (51) International classification | :B60K13/04<br>B62J25/00<br>B62J35/00 | (71)**Name of Applicant :**<br>**1)YAMAHA HATSUDOKI KABUSHIKI KAISHA**<br>Address of Applicant :2500 SHINGAI,IWATA-SHI,SHIZUOKA-KEN, 438-8501,Japan |
| (31) Priority Document No | :JP2013-212056 | (72)**Name of Inventor :** |
| (32) Priority Date | :09/10/2013 | **1)KAZUHISA INOUE** |
| (33) Name of priority country | :Japan | |
| (86) International Application No | :NA | |
| Filing Date | :NA | |
| (87) International Publication No | : NA | |
| (61) Patent of Addition to Application Number | :NA | |
| Filing Date | :NA | |
| (62) Divisional to Application Number | :NA | |
| Filing Date | :NA | |

(57) Abstract :
A two-wheeled motor vehicle (1) includes a head tube (3), main frames (28) connected to the head tube (3), a down frame (33) connected to the head tube (3) and disposed below the main frames (28), a fuel tank (15) placed on the main frames (28), an engine (17) suspended from the main frames (28), and a fuel filter (65) which, as seen from a side, is disposed in an area surrtiunded by the head tube (3), the main frames (28) and the down frame (33), arid in a position not overlapping any one of the main frames (28), the down frame (33) and the engine (17).

No. of Pages : 29 No. of Claims : 12

(12) PATENT APPLICATION PUBLICATION
(19) INDIA
(22) Date of filing of Application :20/04/2012
(21) Application No.945/KOLNP/2012 A
(43) Publication Date : 17/07/2015

(54) Title of the invention : PANTS-TYPE DIAPER AND CORRESPONDING MANUFACTURING PROCESS

(51) International classification :A61F 13/00
(31) Priority Document No :61/256,163
(32) Priority Date :29/10/2009
(33) Name of priority country :U.S.A.
(86) International Application No :PCT/IB2010/054797
Filing Date :22/10/2010
(87) International Publication No : NA
(61) Patent of Addition to Application Number :NA
Filing Date :NA
(62) Divisional to Application Number :NA
Filing Date :NA

(71)**Name of Applicant :**
**1)FAMECCANICA.DATA S.p.A.**
Address of Applicant :Via Aterno 136 I-66020 Sambuceto di San Giovanni Teatino (Chieti) Italy
(72)**Name of Inventor :**
**1)SABLONE Gabriele**
**2)DE LAURETIS Giacomo**

(57) Abstract :
An absorbent sanitary product (10) wearable as a pant-like garment includes a central body (12) including an absorbent portion (14) defining a crotch portion of the product (10) and two side panels (16) extending laterally from the opposite ends the central body (12) to define respective portions of the waist line of the product (10) so that a pair of complementary side panels is provided at each side of the central body. Each side panel (16) has a distal edge (16a) connected to a distal edge (16a) of the complementary side panel (16) via a refastenable hook-and-loop closure (18) including complementary hook (18a) and loop (18b) elements. In each pair of complementary side panels (16) one panel carries at its surface facing inwardly of the product (10) either of the hook (18a) and loop (18b) elements of the hook-and-loop closure (18). The other panel has its distal edge (16a) folded over itself inwardly of the product (10) to form an end loop portion (16c) and a marginal rim (16d) sandwiched between the two complementary side panels (16. The marginal rim (16d) carries at its surface facing toward the other panel (16) the other (18b resp. 18a) of the complementary elements (18a; 18b) of the hook-and-loop closure.

No. of Pages : 21 No. of Claims : 11

(12) PATENT APPLICATION PUBLICATION
(19) INDIA
(22) Date of filing of Application :12/01/2015
(21) Application No.46/KOL/2015 A
(43) Publication Date : 17/07/2015

(54) Title of the invention : ACTIVE ENERGY BUDGET CONTROL MANAGEMENT

(51) International classification :G06Q40/02
(31) Priority Document No :61/926,787
(32) Priority Date :13/01/2014
(33) Name of priority country :U.S.A.
(86) International Application No :NA
Filing Date :NA
(87) International Publication No : NA
(61) Patent of Addition to Application Number :NA
Filing Date :NA
(62) Divisional to Application Number :NA
Filing Date :NA

(71)**Name of Applicant :**
**1)TRANE INTERNATIONAL INC.**
Address of Applicant :1 CENTENNIAL AVENUE, PISCATAWAY, NJ 08854-3921 U.S.A.
(72)**Name of Inventor :**
**1)KIRBY NEAL BICKNELL**

(57) Abstract :
A heating, ventilation, and/or air conditioning (HVAC) system is disclosed as comprising a system controller configured to receive an input of an energy budget for the HVAC system for a specified period of time, determine a set point for the HVAC system that will cause an amount of energy used in operating the HVAC system over the specified period of time to meet the energy budget, and operate the HVAC system at the set point.

No. of Pages : 47 No. of Claims : 20

(12) PATENT APPLICATION PUBLICATION
(21) Application No.606/KOLNP/2015 A
(19) INDIA
(22) Date of filing of Application :09/03/2015
(43) Publication Date : 17/07/2015

(54) Title of the invention : WRITING INSTRUMENT

(51) International classification :B43K8/02,B43K8/03
(31) Priority Document No :2012-201085
(32) Priority Date :13/09/2012
(33) Name of priority country :Japan
(86) International Application No :PCT/JP2013/070136
Filing Date :25/07/2013
(87) International Publication No :WO 2014/041901
(61) Patent of Addition to Application Number :NA
Filing Date :NA
(62) Divisional to Application Number :NA
Filing Date :NA

(71)**Name of Applicant :**
**1)KOKUYO S&T CO., LTD.**
Address of Applicant :1-1, Oimazato Minami 6-chome, Higashinari-ku, Osaka-shi, Osaka 5378686 Japan
(72)**Name of Inventor :**
**1)MATSUSHITA, Kinya**

(57) Abstract :
In the present invention, a configuration is adopted whereby a supply tube body (71) has, on an end face thereof toward a pen tip (5), a protruding part (71a) for compressing fibers of a wadding (6) and forming a localized area of high fiber density when inserted into the wadding (6), and an open end of a supply channel (71c) on a pen tip (5) side thereof is open from the protruding part (71a) to a non protruding part (71b).

No. of Pages : 32 No. of Claims : 6

(12) PATENT APPLICATION PUBLICATION
(19) INDIA
(22) Date of filing of Application :09/03/2015
(21) Application No.607/KOLNP/2015 A
(43) Publication Date : 17/07/2015

(54) Title of the invention : DISC BRAKE PAD MOUNTING AND RETENTION SYSTEM AND METHOD

(51) International classification :F16D55/00
(31) Priority Document No :13/588,500
(32) Priority Date :17/08/2012
(33) Name of priority country :U.S.A.
(86) International Application No :PCT/US2013/054680
Filing Date :13/08/2013
(87) International Publication No :WO 2014/028456
(61) Patent of Addition to Application Number :NA
Filing Date :NA
(62) Divisional to Application Number :NA
Filing Date :NA

(71)**Name of Applicant :**
**1)BENDIX SPICER FOUNDATION BRAKE LLC**
Address of Applicant :901 Cleveland Street, Elyria, OH 44035 U.S.A.
(72)**Name of Inventor :**
**1)PLANTAN, Ronald, S.**
**2)RADHAKRISHNAN, Harish**
**3)WOLF, Dennis, A.**
**4)LANTZ, Richard, L.**
**5)ROBERTS, Will, E.**
**6)BELL, Steven C.**

(57) Abstract :
A system and method are provided for mounting removing and retaining brake pads in disc brakes, such as air operated disc brakes utilized on commercial vehicles, in a manner which does not require the use of separate brake pad retaining devices while providing positive retention of the brake pad. A preferred embodiment includes a brake caliper mount having brake pad abutment surfaces having radially oriented and lateral grooves which permit a brake pad with corresponding projections on is lateral sides to be inserted through an opening of the brake caliper into the radially oriented grooves until the backing plate projections are aligned with the lateral groove, and advancing the brake actuator behind the brake pad to place the brake pad in an operating position in which the actuator prevents the brake pad from realigning with the radially oriented grooves until the actuator is retracted to permit brake pad extraction.

No. of Pages : 30 No. of Claims : 16

(12) PATENT APPLICATION PUBLICATION
(19) INDIA
(22) Date of filing of Application :12/03/2015
(21) Application No.667/KOLNP/2015 A
(43) Publication Date : 17/07/2015

(54) Title of the invention : METHOD AND SYSTEM FOR CLUSTERING SIMILAR ITEMS

(51) International classification :G06Q30/02
(31) Priority Document No :13/954,704
(32) Priority Date :30/07/2013
(33) Name of priority country :U.S.A.
(86) International Application No :PCT/US2013/053017
Filing Date :31/07/2013
(87) International Publication No :WO 2015/016908
(61) Patent of Addition to Application Number :NA
Filing Date :NA
(62) Divisional to Application Number :NA
Filing Date :NA

(71)**Name of Applicant :**
**1)INTUIT INC.**
Address of Applicant :2632 Marine Way, Mountain View, CA 94043 U.S.A.
(72)**Name of Inventor :**
**1)SARSHAR, Nima**

(57) Abstract :
A method and system for selecting a product to advertise. The method includes receiving an advertisement request from an application generating a plurality of nodes corresponding to a plurality of user entered text strings received from a user by the application sending to a marketplace system a plurality of search queries for the plurality of user entered text strings and receiving a plurality of product identifier in response to the plurality of search queries. The method further includes determining a plurality of edges corresponding to the plurality of product identifiers generating a cluster using the plurality of nodes and the plurality of edges selecting a product identifier of the plurality of product identifiers to obtain a selected product identifier and providing to the application the selected product identifier wherein the application displays to the user an advertisement for the product identified by the product identifier.

No. of Pages : 42 No. of Claims : 20

(12) PATENT APPLICATION PUBLICATION
(21) Application No.431/KOLNP/2015 A
(19) INDIA
(22) Date of filing of Application :19/02/2015
(43) Publication Date : 17/07/2015

(54) Title of the invention : METHOD FOR DECONTAMINATING SOIL AND THE LIKE AND SYSTEM FOR DECONTAMINATING SOIL AND THE LIKE

(51) International classification :G21F9/28,G21F9/08
(31) Priority Document No :2012-183646
(32) Priority Date :22/08/2012
(33) Name of priority country :Japan
(86) International Application No :PCT/JP2013/003786
Filing Date :18/06/2013
(87) International Publication No :WO 2014/030282
(61) Patent of Addition to Application Number :NA
Filing Date :NA
(62) Divisional to Application Number :NA
Filing Date :NA

(71)**Name of Applicant :**
**1)MORITA MIYATA CORPORATION**
Address of Applicant :Shiba 256 Square Bldg. 8F, 5-6, Shiba 2-chome, Minato-ku, Tokyo 1050014 Japan
**2)YOSHIDA, Hideo**
(72)**Name of Inventor :**
**1)YOSHIDA, Hideo**
**2)SUYAMA, YASUHIRO**

(57) Abstract :
The purpose of the present invention is to provide a decontamination system for rapidly and reliably decontaminating soil and water of an agricultural field or the like that has been contaminated by a radioactive substance obtaining fine decontamination and enhanced decontamination efficiency, adding a soil activator to decontaminated soil to improve the soil, rapidly returning the improved soil to the originating field to facilitate resumption of farming, and meanwhile finely separating and concentrating radioactive substances deposited on the soil from the soil and ensuring reduced volume of contaminated soil and safe processing of the radioactive substances. A decontamination object (2) contaminated by a radioactive substance is introduced to an acidic eluting solvent (56) and eluted out. The decontamination object contains contaminated soil (17) and a contaminated liquid. The contaminated soil (17), the contaminated liquid, or both in the decontamination object are collected and introduced into the eluting solvent (56). The decontamination object (2, 17) and the radioactive substances eluted into the eluting solvent (56) are subjected to solid liquid separation. The decontaminated soil is separated from the eluting solvent (56) and recovered. The eluting solvent (56) in which the radioactive substances have been eluted out is separated from the soil and concentrated.

No. of Pages : 69 No. of Claims : 17

(12) PATENT APPLICATION PUBLICATION
(19) INDIA
(22) Date of filing of Application :02/03/2015

(21) Application No.543/KOLNP/2015 A
(43) Publication Date : 17/07/2015

(54) Title of the invention : METHOD, SYSTEM AND DEVICE FOR E-COMMERCE PAYMENT INTELLIGENT ACCESS CONTROL

| | |
|---|---|
| (51) International classification | :G06Q20/40,G06Q20/34,G06Q20/38 |
| (31) Priority Document No | :20120867 |
| (32) Priority Date | :02/08/2012 |
| (33) Name of priority country | :Norway |
| (86) International Application No | :PCT/NO2013/000042 |
| Filing Date | :02/08/2013 |
| (87) International Publication No | :WO 2014/021720 |
| (61) Patent of Addition to Application Number | :NA |
| Filing Date | :NA |
| (62) Divisional to Application Number | :NA |
| Filing Date | :NA |

(71)**Name of Applicant :**
**1)CYPOD TECHNOLOGY AS**
Address of Applicant :Strandparken 3 N-3187 Horten Norway
(72)**Name of Inventor :**
**1)WARHUUS, Christian**
**2)HESTHAMAR, Bjørn, Elias**

(57) Abstract :
The invention relates to a method, system and device for authenticating a user of a smartcard in an authentication process providing a secure environment comprising a smartcard and the device connected to a host computer for user identification

No. of Pages : 35 No. of Claims : 14

(12) PATENT APPLICATION PUBLICATION
(21) Application No.602/KOLNP/2015 A
(19) INDIA
(22) Date of filing of Application :09/03/2015
(43) Publication Date : 17/07/2015

(54) Title of the invention : HOT METAL REFINING METHOD

(51) International classification :C21C1/02,C21C5/28
(31) Priority Document No :2012-238606
(32) Priority Date :30/10/2012
(33) Name of priority country :Japan
(86) International Application No :PCT/JP2013/006331
Filing Date :25/10/2013
(87) International Publication No :WO 2014/068933
(61) Patent of Addition to Application Number :NA
Filing Date :NA
(62) Divisional to Application Number :NA
Filing Date :NA

(71)**Name of Applicant :**
**1)JFE STEEL CORPORATION**
Address of Applicant :2-3, Uchisaiwai-cho 2-chome, Chiyoda-ku, Tokyo 1000011 Japan
(72)**Name of Inventor :**
**1)MAEDA, Takahiko**
**2)KAWABATA, Ryo**
**3)TANAKA, Kotaro**
**4)YAMAMOTO, Kazuhito**
**5)ISHIGE, Toshiro**
**6)OZAWA, Sumito**
**7)TAKIGUCHI, Mitsuaki**
**8)KOGE, Masayuki**

(57) Abstract :
When manufacturing molten steel from hot metal using a two base converter-type refining furnace and using one as a hot metal pretreatment refining furnace and the other as a hot metal decarburization refining furnace, the molten slag generated in the decarburization refining furnace is used while still hot as a refining agent in the pretreatment refining furnace without compromising the productivities of the two refining furnaces. A refining method for manufacturing molten steel from hot metal using a converter type refining furnace with at least two bases and using one as a hot metal pretreatment refining furnace (14) and using the other as a decarburization refining furnace (3) for the hot metal (2) pretreated in the pretreatment refining furnace. After the molten steel (5) obtained by decarburization refining in the decarburization refining furnace has been tapped in a ladle (7), the slag (9) remaining inside the decarburization refining furnace is allowed to flow down, still in the molten state from above stacked iron scraps to solidify at least a portion of the slag. Then in pretreatment of hot metal in the pretreatment refining furnace, the slag, at least a portion of which has been solidified, is used together with the iron scraps while still hot.

No. of Pages : 67 No. of Claims : 8

(12) PATENT APPLICATION PUBLICATION
(19) INDIA
(22) Date of filing of Application :12/03/2015
(21) Application No.662/KOLNP/2015 A
(43) Publication Date : 17/07/2015

(54) Title of the invention : TIMING BELT FOR SUCTION FEEDER

(51) International classification :F16G1/28,B65G15/42,B65G15/58
(31) Priority Document No :2012-239368
(32) Priority Date :30/10/2012
(33) Name of priority country :Japan
(86) International Application No :PCT/JP2013/052681
Filing Date :06/02/2013
(87) International Publication No :WO 2014/069000
(61) Patent of Addition to Application Number :NA
Filing Date :NA
(62) Divisional to Application Number :NA
Filing Date :NA

(71)**Name of Applicant :**
**1)GATES UNITTA ASIA COMPANY**
Address of Applicant :4-26, Sakuragawa 4-chome, Naniwa-ku, Osaka-shi, Osaka 5560022 Japan
(72)**Name of Inventor :**
**1)TAJIMA HIROAKI**

(57) Abstract :
A conveyance surface (37) is a planar surface. A drive surface (30) which is the surface on the reverse side of the conveyance surface (37) has a flat surface (31) which is provided at the center section of a timing belt in the widthwise direction thereof and which extends in the longitudinal direction of the timing belt. Belt teeth (32) are formed at regular intervals in the longitudinal direction on both outer sides of the center section. The entire drive surface (30) is covered with sailcloth (36). The sailcloth (36) can be stretched in both the longitudinal and widthwise directions of the timing belt.

No. of Pages : 44 No. of Claims : 7

(12) PATENT APPLICATION PUBLICATION
(19) INDIA
(22) Date of filing of Application :12/03/2015

(21) Application No.663/KOLNP/2015 A
(43) Publication Date : 17/07/2015

(54) Title of the invention : MODULATION OF IMMUNE FUNCTION BY DIETARY BOVINE LACTOFERRIN

| | |
|---|---|
| (51) International classification | :A23L1/305,A23L1/29,A61K38/40 |
| (31) Priority Document No | :61/709,242 |
| (32) Priority Date | :03/10/2012 |
| (33) Name of priority country | :U.S.A. |
| (86) International Application No | :PCT/US2013/063242 |
| Filing Date | :03/10/2013 |
| (87) International Publication No | :WO 2014/055748 |
| (61) Patent of Addition to Application Number | :NA |
| Filing Date | :NA |
| (62) Divisional to Application Number | :NA |
| Filing Date | :NA |

(71)**Name of Applicant :**
**1)THE BOARD OF TRUSTEES OF THE UNIVERSITY OF ILLINOIS**
Address of Applicant :352 Henry Administration Building, 506 South Wright Street, Urbana, IL 61801 U.S.A.
**2)NESTEC S.A.**
(72)**Name of Inventor :**
**1)DONOVAN, SHARON, M.**
**2)CONTRACTOR, NIKHAT**
**3)COMSTOCK, SARAH, S**

(57) Abstract :
The invention provides methods of increasing immune cell function in a newborn mammal that has not consumed any substantial amounts of colostrum or breast milk comprising administering an infant formula comprising about 1.0 to about 10 g/L of lactoferrin to the newborn mammal.

No. of Pages : 29 No. of Claims : 16

(12) PATENT APPLICATION PUBLICATION
(19) INDIA
(22) Date of filing of Application :18/02/2015
(21) Application No.415/KOLNP/2015 A
(43) Publication Date : 17/07/2015

(54) Title of the invention : AUTOMATIC PRESSED ARTICLE MANUFACTURING SYSTEM USING DOUBLE ROBOT LINE FOR TANDEM PRESS LINE

(51) International classification :B21D43/00,B21D53/00,B30B15/30
(31) Priority Document No :10-2012-0078667
(32) Priority Date :19/07/2012
(33) Name of priority country :Republic of Korea
(86) International Application No :PCT/KR2012/010915
Filing Date :14/12/2012
(87) International Publication No :WO 2014/014172
(61) Patent of Addition to Application Number :NA
Filing Date :NA
(62) Divisional to Application Number :NA
Filing Date :NA

(71)**Name of Applicant :**
**1)MIWON PRECISION IND. CO., LTD**
Address of Applicant :224 Guryong-ri, Baebang-myeon, Asan Chungcheongnam-do 336-852 Republic of Korea
(72)**Name of Inventor :**
**1)LEE, Dae Gil**

(57) Abstract :
The present invention relates to an automatic pressed article manufacturing system using a double robot line for a tandem press line and, more specifically, to an automatic pressed article manufacturing system using a double robot line for a tandem press line, wherein a plurality of destakers and positioners are disposed, each group having two robots is separately disposed and moves alternately, so as to continuously and rapidly transfer and supply the raw material in proportion to a press working time, in a raw material transfer process, a material supply process, an article supply process, and a product withdrawal process.

No. of Pages : 15 No. of Claims : 1

(12) PATENT APPLICATION PUBLICATION
(21) Application No.560/KOLNP/2015 A
(19) INDIA
(22) Date of filing of Application :03/03/2015
(43) Publication Date : 17/07/2015

(54) Title of the invention : DISPOSABLE SCALPEL BLADE ASSEMBLY AND ASSOCIATED NON-DISPOSABLE SCALPEL HANDLE

| | |
|---|---|
| (51) International classification | :A61B17/3213,A61B17/3217 |
| (31) Priority Document No | :201210324475.7 |
| (32) Priority Date | :05/09/2012 |
| (33) Name of priority country | :China |
| (86) International Application No | :PCT/CN2013/082815 |
| Filing Date | :02/09/2013 |
| (87) International Publication No | :WO 2014/036920 |
| (61) Patent of Addition to Application Number | :NA |
| Filing Date | :NA |
| (62) Divisional to Application Number | :NA |
| Filing Date | :NA |

(71)**Name of Applicant :**
**1)STERILANCE MEDICAL (SUZHOU) INC.**
Address of Applicant :No. 68 Litanghe Road, Xiangcheng District, Suzhou, Jiangsu 215133 PEOPLE'S REPUBLIC OF CHINA
(72)**Name of Inventor :**
**1)SHI, Guoping**

(57) Abstract :
Disclosed are a disposable scalpel blade assembly and an associated non-disposable scalpel handle (4). The blade assembly has a blade (2) a blade holder (1) and a blade sheath (3). An elastic arm (17) is disposed in the rear of the blade holder (1) and an extended block (172) is disposed at an end of the arm. A reservation hole (37) is disposed at a position of an inner wall of the blade sheath (3) corresponding to the extended block (172). When the scalpel handle (4) is inserted the extended block (172) stretches into the reservation hole (37) to move away laterally so that the scalpel handle (4) is connected to the blade holder (1). When the scalpel handle (4) is pulled out the extended block (172) staggers with the reservation hole (37) and cannot move away laterally so that the scalpel handle (4) cannot be inserted again for connection. A first front locking groove (11) is disposed in a front end of a first sliding groove (12) and a dead locking groove (19) is disposed in front of the first front locking groove (11). After the scalpel is used a top surface unlocking button (31) disposed on the blade sheath (3) can be pushed or an action of pulling out the scalpel handle (4) is used so that a first bulge (321) on the blade sheath (3) falls into the dead locking groove (19) and is deadly locked. By means of the blade assembly and the scalpel handle (4) the safety problem of a second use of the scalpel is completely eliminated.

No. of Pages : 28 No. of Claims : 9

(12) PATENT APPLICATION PUBLICATION
(21) Application No.964/KOL/2014 A
(19) INDIA
(22) Date of filing of Application :19/09/2014
(43) Publication Date : 17/07/2015

(54) Title of the invention : STEAM TURBINE OVERSPEED PREVENTING SYSTEM AND POWER GENERATION PLANT

| | |
|---|---|
| (51) International classification | :F01D9/04 |
| (31) Priority Document No | :2013-201116 |
| (32) Priority Date | :27/09/2013 |
| (33) Name of priority country | :Japan |
| (86) International Application No | :NA |
| Filing Date | :NA |
| (87) International Publication No | : NA |
| (61) Patent of Addition to Application Number | :NA |
| Filing Date | :NA |
| (62) Divisional to Application Number | :NA |
| Filing Date | :NA |

(71)**Name of Applicant :**
**1)KABUSHIKI KAISHA TOSHIBA**
Address of Applicant :1-1,SHIBAURA 1-CHOME,MINATO-KU, TOKYO 105-8001,Japan
(72)**Name of Inventor :**
**1)YUKIHIRO TAYA**
**2)YUKIO KANEHIRA**

(57) Abstract :
A steam turbine overspeed preventing system of an embodiment includes a bypas unit and a valve. The bypass unit connects an intermediate stage part of a steam turbine and a condenser. The valve is provided in a middle of the bypass unit. The valve shuts off the bypass unit at a normal operation time. Besides, the valve makes the bypass unit communicate at a load rejection time to guide residual steam at the steam turbine to the condenser.

No. of Pages : 17 No. of Claims : 7

(12) PATENT APPLICATION PUBLICATION
(19) INDIA
(22) Date of filing of Application :12/03/2015
(21) Application No.665/KOLNP/2015 A
(43) Publication Date : 17/07/2015

(54) Title of the invention : LABELS COMPATIBLE WITH RECYCLING

(51) International classification :C09J7/02,C09J133/08,B32B7/12
(31) Priority Document No :61/698,084
(32) Priority Date :07/09/2012
(33) Name of priority country :U.S.A.
(86) International Application No :PCT/US2013/058471
Filing Date :06/09/2013
(87) International Publication No :WO 2014/039796
(61) Patent of Addition to Application Number :NA
Filing Date :NA
(62) Divisional to Application Number :NA
Filing Date :NA

(71)**Name of Applicant :**
**1)AVERY DENNISON CORPORATION**
Address of Applicant :8080 Norton Parkway, 22-D, Mentor, OH 44060 U.S.A.
(72)**Name of Inventor :**
**1)ROCKOVAN, MITCHELL, J**
**2)AKELEY, JAMES, P.**
**3)BLACKWELL, CHRISTOPHER, J.**

(57) Abstract :
The present invention relates to adhesive compositions facestocks and/or packaging labels containing same where such compositions facestocks and/or labels are designed to facilitate the recyclability of a plastic article formed from any suitable polymer or mixture of polymers (e.g. a polyethylene terephthalate (PET) recycled polyethylene terephthalate (rPET) high density polyethylene (HDPE) polyvinyl chloride (PVC) low density polyethylene (LDPE) polypropylene (PP) polystyrene (PS) polyesters recycled polyesters polylacticacid (PLA) biopolymers cellulose or other types of polymers or plastics). In another embodiment the present invention relates to a method for removing an adhesive composition facestock a nd/or packaging label containing same from a plastic article that is to be recycled and/or subjected to multi generational recycling.

No. of Pages : 37 No. of Claims : 33

(12) PATENT APPLICATION PUBLICATION
(19) INDIA
(22) Date of filing of Application :12/03/2015
(21) Application No.666/KOLNP/2015 A
(43) Publication Date : 17/07/2015

(54) Title of the invention : THREE-DIMENSIONAL CELL CULTURING

(51) International classification :C12N5/00
(31) Priority Document No :20125997
(32) Priority Date :25/09/2012
(33) Name of priority country :Finland
(86) International Application No :PCT/FI2013/050928
Filing Date :24/09/2013
(87) International Publication No :WO 2014/049204
(61) Patent of Addition to Application Number :NA
Filing Date :NA
(62) Divisional to Application Number :NA
Filing Date :NA

(71)**Name of Applicant :**
**1)UPM-KYMMENE CORPORATION**
Address of Applicant :Alvar Aallon katu 1, FI-00100 Helsinki Finland
(72)**Name of Inventor :**
**1)LAUKKANEN, ANTTI**
**2)LOU, YAN-RU**
**3)YLIPERTTULA, MARJO**
**4)KUISMA, TYTTI**
**5)NIKANDER, JOHANNA**
**6)PERE, JAAKKO**

(57) Abstract :
The present invention is related to methods and materials for culturing and transporting stem cells in a three dimensional culture. The materials comprise cellulose nanofibrils in a form of three dimensional discontinuous entities in a biocompatible hydrogel.

No. of Pages : 53 No. of Claims : 35

(12) PATENT APPLICATION PUBLICATION
(19) INDIA
(22) Date of filing of Application :17/09/2014
(21) Application No.955/KOL/2014 A
(43) Publication Date : 17/07/2015

(54) Title of the invention : ROPE GUIDE FOR A CRANE

| | |
|---|---|
| (51) International classification | :B66C23/62 B66C23/70 |
| (31) Priority Document No | :20 2013 008 487.1 |
| (32) Priority Date | :24/09/2013 |
| (33) Name of priority country | :Germany |
| (86) International Application No | :NA |
| Filing Date | :NA |
| (87) International Publication No | : NA |
| (61) Patent of Addition to Application Number | :NA |
| Filing Date | :NA |
| (62) Divisional to Application Number | :NA |
| Filing Date | :NA |

(71)**Name of Applicant :**
**1)MANITOWOC CRANE GROUP FRANCE SAS**
Address of Applicant :66 CHEMIN DU MOULIN CARRON-C60236, 69574 DARDILLY CEDEX, FRANCE
(72)**Name of Inventor :**
**1)BOEHM JOERG**
**2)SCHAEFER ERIK**
**3)GRASSOW VOLKER**

(57) Abstract :
The invention relates to a rope guide for a crane, in particular a rope guide for a telescopic crane. The guide comprises at least one guiding element for a rope (6) which extends from a boom head along the boom of the crane. The guide is characterized in that at least one of the guiding elements comprises a spacer (3A-3F) which has, on its rope-sliding surface facing the rope (6) and as viewed transversely to the direction of the ropes extension, a substantially round concave form. Embodiments have a spacer with one or more grooves (16) which guide and accommodate the rope.

No. of Pages : 19 No. of Claims : 17

(12) PATENT APPLICATION PUBLICATION
(19) INDIA
(22) Date of filing of Application :17/09/2014
(21) Application No.956/KOL/2014 A
(43) Publication Date : 17/07/2015

(54) Title of the invention : MODULAR SET-UP WINCH FOR A CRANE

(51) International classification :B66C23/62
(31) Priority Document No :20 2013 008 486.3
(32) Priority Date :24/09/2013
(33) Name of priority country :Germany
(86) International Application No :NA
Filing Date :NA
(87) International Publication No : NA
(61) Patent of Addition to Application Number :NA
Filing Date :NA
(62) Divisional to Application Number :NA
Filing Date :NA

(71)**Name of Applicant :**
**1)MANITOWOC CRANE GROUP FRANCE SAS**
Address of Applicant :66 CHEMIN DU MOULIN CARRON-C60236, 69574 DARDILLY CEDEX, FRANCE
(72)**Name of Inventor :**
**1)MOHR WALDEMAR**

(57) Abstract :
The invention relates to a set-up winch (10) for a crane, in particular for a mobile crane (1). The winch (10) is designed as a transportable, modular unit. Characteristically, the winchs mounting element (19) for mounting the winch to the crane comprises a securable quick-acting mounting system. Embodiments have a hang-in mounting system with a hang-in bolt (14) and a safety bolt (15).

No. of Pages : 15 No. of Claims : 15

(12) PATENT APPLICATION PUBLICATION
(21) Application No.408/KOLNP/2015 A
(19) INDIA
(22) Date of filing of Application :17/02/2015
(43) Publication Date : 17/07/2015

(54) Title of the invention : THREE-DIMENSIONAL OBJECT DETECTION DEVICE AND THREE-DIMENSIONAL OBJECT DETECTION METHOD

| | |
|---|---|
| (51) International classification | :H04N7/18,B60R1/00,B60R11/04 |
| (31) Priority Document No | :2012-166519 |
| (32) Priority Date | :27/07/2012 |
| (33) Name of priority country | :Japan |
| (86) International Application No | :PCT/JP2013/070223 |
| Filing Date | :25/07/2013 |
| (87) International Publication No | :WO 2014/017601 |
| (61) Patent of Addition to Application Number | :NA |
| Filing Date | :NA |
| (62) Divisional to Application Number | :NA |
| Filing Date | :NA |

(71)**Name of Applicant :**
**1)NISSAN MOTOR CO., LTD.**
Address of Applicant :2, Takara-cho, Kanagawa-ku, Yokohama-shi, Kanagawa 221-0023, Japan
(72)**Name of Inventor :**
**1)Osamu FUKATA**
**2)Yasuhisa HAYAKAWA**

(57) Abstract :
This three dimensional object detection device is characterized by being provided with: a first three dimensional object detection means (33) that detects three dimensional objects on the basis of a captured image; a light source detection means (34) that detects light sources present rearwards from the vehicle of the device; a second three dimensional object detection means (35) that detects three dimensional objects on the basis of the light sources; a three dimensional object determination means (37) that determines whether or not a three dimensional object is an neighboring vehicle; a cloudiness calculation means (38) that calculates a lens cloudiness on the basis of a captured image; and a control means (37) that determines whether or not a three dimensional object is a neighboring vehicle on the basis of the detection results by at least the second three dimensional object detection means when the lens cloudiness is at least a predetermined determination value and determines whether or not a three dimensional object is a neighboring vehicle on the basis of the detection results of at least the first three dimensional object detection means when the lens cloudiness is less than the determination value.

No. of Pages : 88 No. of Claims : 17

(12) PATENT APPLICATION PUBLICATION
(21) Application No.554/KOLNP/2015 A
(19) INDIA
(22) Date of filing of Application :03/03/2015
(43) Publication Date : 17/07/2015

(54) Title of the invention : METHOD FOR REPORTING MOBILITY INFORMATION IN WIRELESS COMMUNICATION SYSTEM AND APPARATUS FOR SUPPORTING SAME.

(51) International classification :H04W8/08,H04W24/10
(31) Priority Document No :61/679,797
(32) Priority Date :06/08/2012
(33) Name of priority country :U.S.A.
(86) International Application No :PCT/KR2013/007094
Filing Date :06/08/2013
(87) International Publication No :WO 2014/025196
(61) Patent of Addition to Application Number :NA
Filing Date :NA
(62) Divisional to Application Number :NA
Filing Date :NA

(71)**Name of Applicant :**
**1)LG ELECTRONICS INC.**
Address of Applicant :20 Yeouido-dong, Yeongdeungpo-gu Seoul 150-721 Republic of Korea
(72)**Name of Inventor :**
**1)JUNG, Sunghoon**
**2)LEE, Youngdae**
**3)PARK, Sungjun**
**4)YI, Seungjune**
**5)KIM, Sangwon**

(57) Abstract :
Provided is a method for reporting mobility information by means of a terminal in a wireless communication system. The method includes generating mobility information and reporting the mobility information via a network. The mobility information includes mobility state information indicating the estimated mobility state of the terminal and mobility history information relating to the mobility history of the terminal.

No. of Pages : 56 No. of Claims : 16

(12) PATENT APPLICATION PUBLICATION
(21) Application No.960/KOL/2014 A
(19) INDIA
(22) Date of filing of Application :18/09/2014
(43) Publication Date : 17/07/2015

(54) Title of the invention : APPARATUS AND METHOD FOR INSPECTING AND PROCESSING PELLET-SHAPED ARTICLES

(51) International classification :B65G43/00
(31) Priority Document No :14/032,452
(32) Priority Date :20/09/2013
(33) Name of priority country :U.S.A.
(86) International Application No :NA
Filing Date :NA
(87) International Publication No : NA
(61) Patent of Addition to Application Number :NA
Filing Date :NA
(62) Divisional to Application Number :NA
Filing Date :NA

(71)**Name of Applicant :**
**1)ACKLEY MACHINE CORPORATION**
Address of Applicant :1273 NORTH CHURCH STREET, MOORESTOWN, NJ 08057 U.S.A.
(72)**Name of Inventor :**
**1)ACKLEY E. MICHAEL**

(57) Abstract :
A conveyer apparatus for inspecting and processing pellet-shaped articles, each of the pellet-shaped articles including a first side and a second side, the conveyer apparatus comprising: a conveyer including a plurality of carrier links to convey a plurality of pellet-shaped articles along a predetermined conveyer path; a first inspection unit including at least one camera to inspect the first side and/or the second side of each of the pellet-shaped articles and determine an orientation of each of the pellet-shaped articles on the conveyer; a processing unit including at least two processing devices, each on an opposite side of the conveyer to process the first side and the second side of each of the pellet-shaped articles; and a second inspection unit including at least one camera on each side of the conveyer to inspect the first side and/or the second side of the pellet-shaped articles after processing.

No. of Pages : 27 No. of Claims : 27

(12) PATENT APPLICATION PUBLICATION
(21) Application No.466/KOLNP/2015 A
(19) INDIA
(22) Date of filing of Application :23/02/2015
(43) Publication Date : 17/07/2015

(54) Title of the invention : USER-CONVENIENT AUTHENTICATION METHOD AND APPARATUS USING A MOBILE AUTHENTICATION APPLICATION

(51) International classification :H04L29/06,G06F21/35,G06F21/43
(31) Priority Document No :61/679,284
(32) Priority Date :03/08/2012
(33) Name of priority country :U.S.A.
(86) International Application No :PCT/US2013/053433
Filing Date :02/08/2013
(87) International Publication No :WO 2014/022778
(61) Patent of Addition to Application Number :NA
Filing Date :NA
(62) Divisional to Application Number :NA
Filing Date :NA

(71)**Name of Applicant :**
**1)VASCO DATA SECURITY INTERNATIONAL GMBH**
Address of Applicant :World-Wide Business Center, Batz-Zimmermannstrasse 7., CH-8152 Glattbrug Switzerland
(72)**Name of Inventor :**
**1)FORT, Nicolas**
**2)COULIER, Frank**
**3)TEIXERON, Guillaume**

(57) Abstract :
Methods apparatus and systems for securing application interactions are disclosed. Application interactions may be secured by at a user authentication device capturing a signal emitted by an access device encoded with an authentication initiating message including an application identifier decoding the signal and obtaining the authentication initiating message retrieving the application identifier presenting a human interpretable representation of the application identity to the user obtaining user approval to generate a response message available to a verification server generating a dynamic security value using a cryptographic algorithm that is cryptographically linked to the application identity and generating a response message including the generated dynamic security value; making the response message available to a verification server; and at the verification server receiving the response message verifying the response message including verifying the validity of the dynamic security value and communicating the result of the verification of the response message to the application.

No. of Pages : 67 No. of Claims : 18

(12) PATENT APPLICATION PUBLICATION
(19) INDIA
(22) Date of filing of Application :19/09/2014
(21) Application No.965/KOL/2014 A
(43) Publication Date : 17/07/2015

(54) Title of the invention : CARTON AND CARTON BLANK

| | |
|---|---|
| (51) International classification | :B65D5/42 B65D71/22 B65D71/32 |
| (31) Priority Document No | :2013-195130 |
| (32) Priority Date | :20/09/2013 |
| (33) Name of priority country | :Japan |
| (86) International Application No | :NA |
| Filing Date | :NA |
| (87) International Publication No | : NA |
| (61) Patent of Addition to Application Number | :NA |
| Filing Date | :NA |
| (62) Divisional to Application Number | :NA |
| Filing Date | :NA |

(71)**Name of Applicant :**
**1)MEADWESTVACO PACKAGING SYSTEMS,LLC**
Address of Applicant :501 SOUTH 5TH STREET,RICHMOND,VIRGINIA 23219-0501,U.S.A
(72)**Name of Inventor :**
**1)TAMIO IKEDA**

(57) Abstract :
A carton (90) for packaging articles includes a top panel (18), a base panel (14), a first side wall panel (16), and a second side wall panel (20). A first one (16) of those panels has a display window (W). The display window includes an aperture (A1) for loading and display of an article (A) therethrough. The carton includes at least one securing device for securing an article displayed within the display window. The at least one securing device has a locking tab (28a) hinged to a second one (18) of those panels. The second panel is disposed adjacent to the first panel. The locking tab is foldable internally of the carton and has an engaging edge for engaging a portion of the article.

No. of Pages : 36 No. of Claims : 18

(12) PATENT APPLICATION PUBLICATION
(19) INDIA
(22) Date of filing of Application :13/03/2015
(21) Application No.677/KOLNP/2015 A
(43) Publication Date : 17/07/2015

(54) Title of the invention : LOCK RING SPREADER

(51) International classification :B25B27/02
(31) Priority Document No :61/703,441
(32) Priority Date :20/09/2012
(33) Name of priority country :U.S.A.
(86) International Application No :PCT/US2013/060337
Filing Date :18/09/2013
(87) International Publication No :WO 2014/047133
(61) Patent of Addition to Application Number :NA
Filing Date :NA
(62) Divisional to Application Number :NA
Filing Date :NA

(71)**Name of Applicant :**
**1)GKN ARMSTRONG WHEELS, INC.**
Address of Applicant :5453 6th Avenue, Armstrong, IA 50514 U.S.A.
(72)**Name of Inventor :**
**1)HENSEL, Leonard, Austin**
**2)DAHL, Aaron, Robert**
**3)CASTILLO, Jose**
**4)MORROW, Russell, Kenneth**

(57) Abstract :
A lock ring spreader is capable of being mounted to a lock ring having a first end and a second end. The lock ring spreader comprises a first mount that is mountable to the lock ring near the first end of the lock ring and a second mount that is mountable to the lock ring near the second end of the lock ring. A crank arm is pivotally coupled to the first mount and extends radially outward from the first mount relative to the lock ring. A link arm is pivotally coupled to the second mount and the crank arm and extends radially outward from the second mount relative to the lock ring. Pivoting the crank arm radially inward relative to the lock ring pivots the link arm relative to the crank arm and expands the distance between the first mount and the second mount.

No. of Pages : 48 No. of Claims : 20

(12) PATENT APPLICATION PUBLICATION
(21) Application No.409/KOLNP/2015 A
(19) INDIA
(22) Date of filing of Application :17/02/2015
(43) Publication Date : 17/07/2015

(54) Title of the invention : GREASE COMPOSITION FOR ELECTRIC POWER STEERING DEVICE AND ELECTRIC POWER STEERING DEVICE

(51) International classification :C10M169/00,B62D5/04,C10M105/04
(31) Priority Document No :2012-191060
(32) Priority Date :31/08/2012
(33) Name of priority country :Japan
(86) International Application No :PCT/JP2013/073105
Filing Date :29/08/2013
(87) International Publication No :WO 2014/034761
(61) Patent of Addition to Application Number :NA
Filing Date :NA
(62) Divisional to Application Number :NA
Filing Date :NA

(71)**Name of Applicant :**
**1)JX NIPPON OIL & ENERGY CORPORATION**
Address of Applicant :6-3, Otemachi 2-chome, Chiyodaku, Tokyo 1008162 Japan
**2)HITACHI AUTOMOTIVE SYSTEMS STEERING, LTD.**
(72)**Name of Inventor :**
**1)ARAI, Takashi**
**2)SAKAI, Kazumi**
**3)SHITARA, Yuji**
**4)TANIUCHI, Satoshi**
**5)SHIINO, Kohtaro**
**6)SUZUKI, Tatsuro**

(57) Abstract :
3Provided are both a grease composition for an electric power steering device and an electric power steering device. The grease composition can keep a sufficiently low coefficient of friction in a sliding area between a steel and a resin over a long period is less susceptible to being expelled from the sliding area does not cause oil film shortage and thus can minimize the occurrence of stick slips. A grease composition for an electric power steering device comprising a synthetic hydrocarbon oil which exhibits a density of 0.75 to 0.95g/cm at 15°C a saturated aliphatic amide compound boron nitride a glycerin fatty acid partial ester and a metal soap based thickener; and an electric power steering device using the grease composition.

No. of Pages : 30 No. of Claims : 7

(12) PATENT APPLICATION PUBLICATION
(19) INDIA
(22) Date of filing of Application :10/03/2015
(21) Application No.621/KOLNP/2015 A
(43) Publication Date : 17/07/2015

(54) Title of the invention : FLOW CYTOMETER NOZZLE TIP

(51) International classification :C12M1/34,G01N15/14
(31) Priority Document No :61/703,102
(32) Priority Date :19/09/2012
(33) Name of priority country :U.S.A.
(86) International Application No :PCT/US2013/060730
Filing Date :19/09/2013
(87) International Publication No :WO 2014/047358
(61) Patent of Addition to Application Number :NA
Filing Date :NA
(62) Divisional to Application Number :NA
Filing Date :NA

(71)**Name of Applicant :**
**1)INGURAN, LLC**
Address of Applicant :22575 State Highway 6 South, Navasota, Texas 77868 U.S.A.
(72)**Name of Inventor :**
**1)BUCHANAN, Kris**
**2)EVANS, Kenneth Michael**

(57) Abstract :
A nozzle tip formed from a cylindrical body defining a longitudinal axis and a frustoconical body adjoining the cylindrical body on the longitudinal axis. The cylindrical body may be in fluid communication with the frustoconical body. The frustoconical body may end in a flat surface with a nozzle exit orifice which is transverse to the longitudinal axis. There may be a cutout at the edge of the frustoconical body and the flat surface. The flow cytometer system may also include a source of electromagnetic radiation for producing a beam incident upon the fluid stream and the particles and a detector for detecting light emitted or reflected from the particles within the fluid stream in response to the beam.

No. of Pages : 39 No. of Claims : 32

(12) PATENT APPLICATION PUBLICATION
(19) INDIA
(22) Date of filing of Application :13/03/2015
(21) Application No.678/KOLNP/2015 A
(43) Publication Date : 17/07/2015

(54) Title of the invention : DEVICE FOR THE PRODUCTION OF A THREE-DIMENSIONAL OBJECT IN LAYERS

(51) International classification :B29C67/00,B22F3/105,B29C37/00
(31) Priority Document No :10 2012 018 366.6
(32) Priority Date :18/09/2012
(33) Name of priority country :Germany
(86) International Application No :PCT/EP2013/069361
Filing Date :18/09/2013
(87) International Publication No :WO 2014/044705
(61) Patent of Addition to Application Number :NA
Filing Date :NA
(62) Divisional to Application Number :NA
Filing Date :NA

(71)**Name of Applicant :**
**1)EOS GMBH ELECTRO OPTICAL SYSTEMS**
Address of Applicant :Robert-Stirling-Ring 1, 82152 Krailling Germany
(72)**Name of Inventor :**
**1)HEUGEL, MARTIN**
**2)FEY, GEORG**
**3)BAUMANN, ANDREAS**
**4)KLINGEL, HANS**

(57) Abstract :
The invention relates to the production of an object (1) produced by solidifying powder in layers after which the object is pushed into a container (6) together with the powder (2) surrounding the object and closed off by a plate (3) located under the object during the production of the object.

No. of Pages : 13 No. of Claims : 10

(12) PATENT APPLICATION PUBLICATION
(21) Application No.679/KOLNP/2015 A
(19) INDIA
(22) Date of filing of Application :13/03/2015
(43) Publication Date : 17/07/2015

(54) Title of the invention : REDUCED OUTPUT RATE COKE OVEN OPERATION WITH GAS SHARING PROVIDING EXTENDED PROCESS CYCLE

(51) International classification :C10B29/00,C10B21/18
(31) Priority Document No :61/704,389
(32) Priority Date :21/09/2012
(33) Name of priority country :U.S.A.
(86) International Application No :PCT/US2012/072169
Filing Date :28/12/2012
(87) International Publication No :WO 2014/046701
(61) Patent of Addition to Application Number :NA
Filing Date :NA
(62) Divisional to Application Number :NA
Filing Date :NA

(71)**Name of Applicant :**
**1)SUNCOKE TECHNOLOGY AND DEVELOPMENT LLC.**
Address of Applicant :1011 Warrenville Road 6th Floor, Lisle, IL 60532 U.S.A.
(72)**Name of Inventor :**
**1)QUANCI, John Francis**
**2)BALL, MARK, ANTHONY**
**3)SEATON, ASHLEY, NICOLE**

(57) Abstract :
The present technology is generally directed to systems and methods of controlling or reducing the output rate of a coke oven through gas sharing providing an extended process cycle. In some embodiments a method of gas sharing between coke ovens to decrease a coke production rate includes operating a plurality of coke ovens to produce coke and heated exhaust gases. In some embodiments a first coke oven is offset in operation cycle from a second coke oven. The method further includes directing the heated exhaust gases from the first coke oven to the second coke oven while the second coke oven is mid cycle. The heat transfer allows the second coke oven to extend its cycle while staying above a critical operating temperature. By extending the operational cycle while generally maintaining output per cycle overall production is decreased.

No. of Pages : 33 No. of Claims : 23

(12) PATENT APPLICATION PUBLICATION
(21) Application No.982/KOL/2014 A
(19) INDIA
(22) Date of filing of Application :24/09/2014
(43) Publication Date : 17/07/2015

(54) Title of the invention : VEHICLE BODY FRAME,AND A SADDLE RIDING TYPE VEHICLE HAVING SAME.

| | | |
|---|---|---|
| (51) International classification | :B62D25/08 | (71)**Name of Applicant :** |
| (31) Priority Document No | :JP2013-212055 | **1)YAMAHA HATSUDOKI KABUSHIKI KAISHA** Address of Applicant :2500 SHINGAI,IWATA-SHI,SHIZUOKA-KEN, 438-8501,Japan |
| (32) Priority Date | :09/10/2013 | |
| (33) Name of priority country | :Japan | (72)**Name of Inventor :** |
| (86) International Application No | :NA | **1)TAKASHI SUZUKI** |
| Filing Date | :NA | |
| (87) International Publication No | : NA | |
| (61) Patent of Addition to Application Number | :NA | |
| Filing Date | :NA | |
| (62) Divisional to Application Number | :NA | |
| Filing Date | :NA | |

(57) Abstract :
A vehicle body frame (2), and a two-wheeled motor vehicle (1) having the same. The body frame (2) includes a head tube (3), a pair of pipe type right and left main frames (28) connected to the head tube (3), a down frame (33) connected to the head tube.(3) and disposed below the main frames (28), and an engine-suspending bracket (48) extending downward from the pair of main frames (28). With the engine-suspending bracket (48) extending downward from the main frames (28), an engine (17) is suspended in a position separated downward from the main frames (28).

No. of Pages : 28 No. of Claims : 11

(12) PATENT APPLICATION PUBLICATION
(19) INDIA
(22) Date of filing of Application :10/03/2015
(21) Application No.622/KOLNP/2015 A
(43) Publication Date : 17/07/2015

(54) Title of the invention : FLUID EXCHANGE DEVICES, PRESSURE EXCHANGERS, AND RELATED METHODS

(51) International classification :F16K11/02,F04F13/00
(31) Priority Document No :13/587,722
(32) Priority Date :16/08/2012
(33) Name of priority country :U.S.A.
(86) International Application No :PCT/US2013/055467
Filing Date :16/08/2013
(87) International Publication No :WO 2014/028905
(61) Patent of Addition to Application Number :NA
Filing Date :NA
(62) Divisional to Application Number :NA
Filing Date :NA

(71)**Name of Applicant :**
**1)FLOWSERVE MANAGEMENT COMPANY**
Address of Applicant :5215 North O'Connor Boulevard, Suite 2300, Irving, Texas 75039 U.S.A.
(72)**Name of Inventor :**
**1)LEHNER, Daniela**
**2)DREISS, Andrea**
**3)SCHEVETS, Andrew**

(57) Abstract :
Exchanger devices include a plurality of fixed exchange ducts and a rotating valve assembly for directing flow to and from the plurality of exchange ducts. Methods of exchanging pressure between fluid streams may include directing fluids through an exchange device and pressurizing a fluid in the plurality of exchange ducts of the exchanger device.

No. of Pages : 44 No. of Claims : 32

(12) PATENT APPLICATION PUBLICATION
(21) Application No.681/KOLNP/2015 A
(19) INDIA
(22) Date of filing of Application :13/03/2015
(43) Publication Date : 17/07/2015

(54) Title of the invention : A METHOD FOR BROWSING DIGITAL MEDIA TRACKS WITH RESPECT TO A DISPLAY SCREEN ASSOCIATED WITH A COMPUTING DEVICE

(51) International classification :G06F 17/30
(31) Priority Document No :11/519,460
(32) Priority Date :11/09/2006
(33) Name of priority country :U.S.A.
(86) International Application No :PCT/US2007/078052
Filing Date :10/09/2007
(87) International Publication No :WO2008033773
(61) Patent of Addition to Application Number :NA
Filing Date :NA
(62) Divisional to Application Number :461/KOLNP/2009
Filed on :03/02/2009

(71)**Name of Applicant :**
**1)APPLE INC.**
Address of Applicant :1 INFINITE LOOP, M/S 3-PAT, CUPERTINO, CA 95014 U.S.A.
(72)**Name of Inventor :**
**1)DOWDY, THOMAS**
**2)HELLER, DAVID**
**3)JONES, ANNE**

(57) Abstract :
Methods and systems that improve the way media is played, sorted, modified, stored and cataloged are disclosed. One aspect relates to a browse window that allows a user to navigate through and select images that are related to media items. Another aspect relates to a graphical user interface of a media management program that utilizes multiple browse windows. Another aspect relates to simultaneously displayed media browse windows whose operations are integrated together so that the content shown therein is automatically synchronized when selections are made. Another aspect relates to resetting browsed content to the currently playing media.

No. of Pages : 37 No. of Claims : 14

(12) PATENT APPLICATION PUBLICATION
(19) INDIA
(22) Date of filing of Application :13/03/2015
(21) Application No.682/KOLNP/2015 A
(43) Publication Date : 17/07/2015

(54) Title of the invention : HEAD MOUNTED SYSTEM AND METHOD TO COMPUTE AND RENDER A STREAM OF DIGITAL IMAGES USING A HEAD MOUNTED SYSTEM

| | |
|---|---|
| (51) International classification | :G02B27/01,H04N13/04,G02B27/00 |
| (31) Priority Document No | :12182804.0 |
| (32) Priority Date | :03/09/2012 |
| (33) Name of priority country | :EPO |
| (86) International Application No | :PCT/EP2013/068113 |
| Filing Date | :02/09/2013 |
| (87) International Publication No | :WO 2014/033306 |
| (61) Patent of Addition to Application Number | :NA |
| Filing Date | :NA |
| (62) Divisional to Application Number | :NA |
| Filing Date | :NA |

(71)**Name of Applicant :**
**1)SENSOMOTORIC INSTRUMENTS GESELLSCHAFT FÜR INNOVATIVE SENSORIK MBH**
Address of Applicant :Warthestraße 21, 14513 Teltow Germany
(72)**Name of Inventor :**
**1)NISTICO, WALTER**
**2)HOFFMANN, JAN**
**3)SCHMIDT, EBERHARD**

(57) Abstract :
The invention relates to a head mounted system (10) comprising a binocular eye tracking system (14a, 14b) comprising at least a first camera (14a) arranged for acquiring a users left eye (16a) and at least a second camera (14b) arranged for acquiring a users right eye (16b), a head mounted display (10) comprising a first displaying means (18a) for presenting an image to a users left eye (16a), a second displaying means (18b) for presenting an image to a users right eye (16b), a processing unit (24, 24a, 24b) designed to process images from the eye tracking system (14a, 14b) and calculate at least a 3D position of the left (16a) and the right eye (16b) and an orientation vector of the left (16a) and the right eye (16b) and to compute and render a stream of digital images to be projected onto the users left and right eye (16a, 16b) by means of the head mounted display, wherein the processing unit (24, 24a, 24b) is further designed to consider the 3D position of the left and the right eye (16a, 16b) and the orientation of the left and the right eye (16a, 16b) when computing and rendering the stream of digital images. The invention further relates to a method to compute and render a stream of digital images using a head mounted display.

No. of Pages : 39 No. of Claims : 30

(12) PATENT APPLICATION PUBLICATION
(21) Application No.559/KOLNP/2015 A
(19) INDIA
(22) Date of filing of Application :03/03/2015
(43) Publication Date : 17/07/2015

(54) Title of the invention : METHOD FOR SURVEYING DRILL HOLES, DRILLING ARRANGEMENT, AND BOREHOLE SURVEY ASSEMBLY

(51) International classification :E21B1/00,E21B47/01,E21B47/02
(31) Priority Document No :20125921
(32) Priority Date :06/09/2012
(33) Name of priority country :Finland
(86) International Application No :PCT/FI2013/050858
Filing Date :05/09/2013
(87) International Publication No :WO 2014/037619
(61) Patent of Addition to Application Number :NA
Filing Date :NA
(62) Divisional to Application Number :NA
Filing Date :NA

(71)**Name of Applicant :**
**1)ROBIT ROCKTOOLS LTD.**
Address of Applicant :Vikkiniityntie 9, FI-33880 Lempäälä Finland
(72)**Name of Inventor :**
**1)HEINONEN, Mikko**
**2)SJÖHOLM, Harri**
**3)RAUTIAINEN, Jussi**
**4)MATTILA, Mikko**

(57) Abstract :
The invention relates to a method for surveying drill holes and to a drilling arrangement and to a borehole survey assembly. The method comprises a first providing step for providing a drill tool (1) comprising at least one drill rod (2) and a drill bit assembly (3) and a second providing step for providing a borehole survey tool (4) comprising sensor means (5) for measuring a borehole (6). In the method a drill tool (1) comprising a central flushing channel (8) for conducting flushing fluid to the drill bit assembly (3) is used and the borehole survey tool (4) is arranged in the arranging step in the central flushing channel (8) so that flushing fluid can flow in the central flushing channel (8) past the borehole survey tool (4).

No. of Pages : 29 No. of Claims : 50

(12) PATENT APPLICATION PUBLICATION
(19) INDIA
(22) Date of filing of Application :25/09/2014
(21) Application No.985/KOL/2014 A
(43) Publication Date : 17/07/2015

(54) Title of the invention : FLUSH TOILET

| | |
|---|---|
| (51) International classification | :E03D11/02 E03D11/08 |
| (31) Priority Document No | :2013-205181 |
| (32) Priority Date | :30/09/2013 |
| (33) Name of priority country | :Japan |
| (86) International Application No | :NA |
| Filing Date | :NA |
| (87) International Publication No | : NA |
| (61) Patent of Addition to Application Number | :NA |
| Filing Date | :NA |
| (62) Divisional to Application Number | :NA |
| Filing Date | :NA |

(71)**Name of Applicant :**
**1)TOTO LTD.**
Address of Applicant :1-1,NAKASHIMA 2-CHOME,KOKURAKITA-KU, KITAKYUSHU-SHI,FUKUOKA 8028601, Japan
(72)**Name of Inventor :**
**1)SHIRAKAWA SHIGEHISA**
**2)SAKABA ISAMI**

(57) Abstract :
[Object] To provide a flush toilet that can reduce splashing of flush water due to collision of flush water and that a user can use comfortably. [Solution] A flush toilet according to the present invention includes a bowl unit including a waste receiving surface and a rim, a trapway, and flush water supply means. The waste receiving surface of the bowl unit includes an upper waste receiving surface and a recessed portion. The flush water supply means includes a pair of first nozzles that form a first flow of flush water directed from a front region of the upper waste receiving surface into the recessed portion, a second nozzle that forms a second flow of flush water directed from a back region of the upper waste receiving surface into the recessed portion, and a pair of third nozzles that form third flows of flush water directed from the left and right sides of the second nozzle into the recessed portion. The directions of the second nozzle and the third nozzles are set so that flush water ejected from the second nozzle and flush water ejected from the third nozzles flow from the back region of the upper waste receiving surface into the recessed portion.

No. of Pages : 46 No. of Claims : 7

(12) PATENT APPLICATION PUBLICATION
(19) INDIA
(22) Date of filing of Application :17/09/2011
(21) Application No.3845/KOLNP/2011 A
(43) Publication Date : 17/07/2015

(54) Title of the invention : PATCH FOR TREATING CONSTIPATION USING CRUDE DRUGS

(51) International classification :A61K 9/70
(31) Priority Document No :10-2009-0014979
(32) Priority Date :23/02/2009
(33) Name of priority country :Republic of Korea
(86) International Application No :PCT/KR2010/001026
Filing Date :19/02/2010
(87) International Publication No : NA
(61) Patent of Addition to Application Number :NA
Filing Date :NA
(62) Divisional to Application Number :NA
Filing Date :NA

(71)**Name of Applicant :**
**1)KIM Tae Jin**
Address of Applicant :16-4 Jungang-dong 4(sa)-ga Wansan-gu Jeonju-si Jeollabuk-do 560-014 Korea
(72)**Name of Inventor :**
**1)KIM Tae Jin**

(57) Abstract :
The present invention relates to a patch for treating constipation, which contains rhubarb ingredients selected from among crude drugs (medical herbs). More particularly, the present invention relates to a patch for treating constipation in which powder obtained by boiling, filtering, and free-drying rhubarb selected from among pure crude drugs is applied to the patch, and the patch is attached to the recesses (arched parts) below the wrists of both hands of a patient, to thereby increase the metabolism of internal organs of the patient and exhibit the effects of treating or preventing constipation. The patch of the present invention can be simply attached to the skin of the patient instead of directly administering agents for treating constipation to the patient.

No. of Pages : 20 No. of Claims : 3

(12) PATENT APPLICATION PUBLICATION
(19) INDIA
(22) Date of filing of Application :17/01/2014
(21) Application No.69/KOL/2014 A
(43) Publication Date : 17/07/2015

(54) Title of the invention : A SYSTEM FOR ONLINE NON CONTACT ESTIMATION OF COIL LENGTH IN LOOPER AT ENTRY AND EXIT OF PICKLING LINE IN COLD ROLLING MILL

| | |
|---|---|
| (51) International classification | :B21B 38/00 |
| (31) Priority Document No | :NA |
| (32) Priority Date | :NA |
| (33) Name of priority country | :NA |
| (86) International Application No | :NA |
| Filing Date | :NA |
| (87) International Publication No | : NA |
| (61) Patent of Addition to Application Number | :NA |
| Filing Date | :NA |
| (62) Divisional to Application Number | :NA |
| Filing Date | :NA |

(71)**Name of Applicant :**
**1)STEEL AUTHORITY OF INDIA LIMITED**
Address of Applicant :RESEARCH & DEVELOPMENT CENTRE FOR IRON & STEEL,DORANDA, RANCHI-834002 Bihar India
(72)**Name of Inventor :**
**1)KUMAR DEEPAK**
**2)PRASAD RAMANUJ**
**3)SHARAN ARCHANA**
**4)MAJUMDAR SUSANTA**
**5)PRASAD BINOD KUMAR**

(57) Abstract :
The present invention relates to a system for online non contact estimation of coil length in entry and exit horizontal loopers in steel rolling mill with desired accuracy. The system measures distance between looper trolley and fixed pulley involving non-contact long range LASER sensors capable of measuring distance up to 200 meter with pilot light for alignment and focusing, used as primary sensor alongwith diamond grade reflector for high sensitivity. The system estimates length in looper, indicates actual status of looper trolleys and avoids derailment of looper trolley. The system is capable of high accuracy length estimation and does not require regular maintenance. The system measures and displays the trolley distance of looper both at uncoiler and coiler pulpits. The system for online estimation of coil length in looper thus allows the pickling line to run at higher speed for longer duration of time, hence increase in productivity.

No. of Pages : 18 No. of Claims : 11

(12) PATENT APPLICATION PUBLICATION
(21) Application No.442/KOLNP/2015 A
(19) INDIA
(22) Date of filing of Application :20/02/2015
(43) Publication Date : 17/07/2015

(54) Title of the invention : SCREW LOOSENING PREVENTION STRUCTURE

(51) International classification :F16B39/02
(31) Priority Document No :2012-162566
(32) Priority Date :23/07/2012
(33) Name of priority country :Japan
(86) International Application No :PCT/JP2013/066362
Filing Date :13/06/2013
(87) International Publication No :WO 2014/017209
(61) Patent of Addition to Application Number :NA
Filing Date :NA
(62) Divisional to Application Number :NA
Filing Date :NA

(71)**Name of Applicant :**
**1)KAYABA INDUSTRY CO., LTD.**
Address of Applicant :World Trade Center Bldg., 4-1, Hamamatsu-cho 2-chome, Minato-ku, Tokyo 105-6111, Japan
(72)**Name of Inventor :**
**1)YUZAWA, Norio**

(57) Abstract :
A screw loosening prevention structure (15), that restrains the opposing rotation of a cylinder head (5) (first member) and a cylinder tube (4) (second member) that are coupled together by the screwing action of screws (11, 12), is provided with a first hole (16) that is formed in the cylinder head (5), a second hole (17) that is formed in the cylinder tube (4), a pin (18) that is inserted into the second hole (17), and an energizing member (spring (19)) that is inserted into the second hole (17) and applies energy to the pin (18) in the direction of pushing the pin out of the second hole (17). In a state where the cylinder head (5) and the cylinder tube (4) are engaged the pin (18) is inserted through the first hole (16) and the second hole (17).

No. of Pages : 35 No. of Claims : 5

(12) PATENT APPLICATION PUBLICATION
(21) Application No.510/KOLNP/2015 A
(19) INDIA
(22) Date of filing of Application :27/02/2015
(43) Publication Date : 17/07/2015

(54) Title of the invention : SYSTEMS AND METHODS FOR DESIGNING, DEVELOPING, AND SHARING ASSAYS

(51) International classification :G06F19/00
(31) Priority Document No :13/566,654
(32) Priority Date :03/08/2012
(33) Name of priority country :U.S.A.
(86) International Application No :PCT/US2013/053453
Filing Date :02/08/2013
(87) International Publication No :WO 2014/022787
(61) Patent of Addition to Application Number :NA
Filing Date :NA
(62) Divisional to Application Number :NA
Filing Date :NA

(71)**Name of Applicant :**
**1)LABEL INDEPENDENT, INC.**
Address of Applicant :295 Princeton Highstown Road Suite 11-374 West Windsor, NJ 08550 U.S.A.
(72)**Name of Inventor :**
**1)AKLIAN, Mannix**

(57) Abstract :
Described are computer based methods and apparatuses including computer program products for designing assays. A database stores a set of user selectable element data objects a set of user selectable operation data objects and a set of validation rules for the one or more assays that can be used to determine whether an assay is valid. Data is received that is indicative of selecting for a candidate assay specification a first set of element data objects and a first set of operation data objects. The candidate assay specification is generated based on the received data. The candidate assay specification is validated. An assay data file is generated for the candidate assay specification that includes the first set of element data objects and the first set of operation data objects such that the assay data file can be shared among a set of users.

No. of Pages : 88 No. of Claims : 7

(12) PATENT APPLICATION PUBLICATION
(19) INDIA
(22) Date of filing of Application :04/03/2015
(21) Application No.569/KOLNP/2015 A
(43) Publication Date : 17/07/2015

(54) Title of the invention : DERIVATIVES OF 1-(SUBSTITUTED SULFONYL)-2-AMINOIMIDAZOLINE AS ANTITUMOR AND ANTIPROLIFERATIVE AGENTS

(51) International classification :C07D401/14,C07D405/14,C07D403/04
(31) Priority Document No :PL403491
(32) Priority Date :10/04/2013
(33) Name of priority country :Poland
(86) International Application No :PCT/IB2014/060200
Filing Date :27/03/2014
(87) International Publication No :WO 2014/167446
(61) Patent of Addition to Application Number :NA
Filing Date :NA
(62) Divisional to Application Number :NA
Filing Date :NA

(71)**Name of Applicant :**
**1)ONCOARENDI THERAPEUTICS SP. Z O.O.**
Address of Applicant :J.J. Rostafinskich 4, PL-02-593 Warsaw Poland
(72)**Name of Inventor :**
**1)PIKUL, Stanislaw Wieslaw**
**2)CHOLODY, Wieslaw Marek**

(57) Abstract :
The invention provides novel, water-soluble 2- aminoimidazoline derivatives having general Formula (I) as well as some precursors of Formula (I), which are very potent inducers of G2/M cell cycle arrest. In treated tumor cells compounds of Formula (I) give gene expression profile distinct from known antimitotic agents. The invention also provides methods for preparing the compounds, and methods of using the compounds for the treatment of cancer or other mammalian diseases characterized by undesirably high levels of cell proliferation. The compounds of the invention are also expected to have utility as research tools.

No. of Pages : 31 No. of Claims : 19

(12) PATENT APPLICATION PUBLICATION
(19) INDIA
(22) Date of filing of Application :27/02/2015
(21) Application No.509/KOLNP/2015 A
(43) Publication Date : 17/07/2015

(54) Title of the invention : EVAPORATION HEAT TRANSFER TUBE

(51) International classification :F28F1/42
(31) Priority Document No :201210451660.2
(32) Priority Date :12/11/2012
(33) Name of priority country :China
(86) International Application No :PCT/EP2013/003333
Filing Date :06/11/2013
(87) International Publication No :WO 2014/072047
(61) Patent of Addition to Application Number :NA
Filing Date :NA
(62) Divisional to Application Number :NA
Filing Date :NA

(71)**Name of Applicant :**
**1)WIELAND-WERKE AG**
Address of Applicant :Graf-Arco-Strasse 36, 89079 ULM Germany
(72)**Name of Inventor :**
**1)BEUTLER, Andreas**
**2)SCHWITALLA, Andreas**
**3)CAO, Jianying**
**4)LUO, Zhong**

(57) Abstract :
The invention relates to an evaporation heat transfer tube which comprises a tube main body and a step like structure; outer fins are arranged at intervals on the outer surface of the tube main body and an inter fin groove is formed between two adjacent outer fins; the step like structure respectively abuts against the bottom plane and one of the side walls of the inter fin groove. The step like structure comprises a first surface a second surface and at least one flange formed by the intersection of the two surfaces wherein the first and the second surface are intersected respectively with the side wall and the bottom plane. Preferably the first surface and the side wall are intersected to form a sharp corner; the second surface and the bottom plane are intersected to form a sharp corner the radius of curvature is 0 to 0.01 mm the angle formed by the first surface and the side wall is less than or equal to 90 degree or the angle formed by the second surface and the bottom plane is less than or equal to 90 degree. The height Hr of the step like structure and the height H of the inter fin groove meet the following relation: Hr/H is greater than or equal to 0.2. The present invention is ingeniously designed and concisely structured and it remarkably enhances the boiling coefficient between the outer surface and the liquid outside the tube and it reinforces the heat transfer in boiling and is suitable for large scale application.

No. of Pages : 23 No. of Claims : 15

(12) PATENT APPLICATION PUBLICATION
(19) INDIA
(22) Date of filing of Application :04/03/2015
(21) Application No.568/KOLNP/2015 A
(43) Publication Date : 17/07/2015

(54) Title of the invention : A LOCATION-BASED PROGRAM LISTING

(51) International classification :H04N21/258,H04N21/262,H04N21/2665
(31) Priority Document No :13/568,193
(32) Priority Date :07/08/2012
(33) Name of priority country :U.S.A.
(86) International Application No :PCT/US2013/053378
Filing Date :02/08/2013
(87) International Publication No :WO 2014/025634
(61) Patent of Addition to Application Number :NA
Filing Date :NA
(62) Divisional to Application Number :NA
Filing Date :NA

(71)**Name of Applicant :**
**1)MOTOROLA MOBILITY LLC**
Address of Applicant :600 North US Highway 45, Libertyville, Illinois 60048 U.S.A.
(72)**Name of Inventor :**
**1)KUNISETTY, Sridhar**
**2)CHANDERRAJU, Varma L.**
**3)KALRA, Vinay**
**4)MISHRA, Sanjeev K.**
**5)RAO, Bharath R.**

(57) Abstract :
Disclosed are methods that aid users, especially users temporarily staying in locations remote from home, in finding and accessing media content. A program listing tailored for the user s current location, and showing (306) only services actually available at that location, is created (310) and presented (312) to the user. In some embodiments, the user interacts with the listing to access available media content items. If the user has expressed (406) specific location based preferences, then those preferences can be taken (406) into account when creating the listing. If a service subscribed to by the user is not (504) available at this remote location, then an alternate provider will be searched for (506), and, if found, the user s favorite shows can be added (508) to the created program listing.

No. of Pages : 21 No. of Claims : 10

(12) PATENT APPLICATION PUBLICATION
(19) INDIA
(22) Date of filing of Application :04/03/2015
(21) Application No.571/KOLNP/2015 A
(43) Publication Date : 17/07/2015

(54) Title of the invention : NT-PROCNP AS A BIOMARKER OF VASCULAR DISORDERS AND PREGNANCY COMPLICATION

| | |
|---|---|
| (51) International classification | :G01N33/68,C07K16/22,A61K39/00 |
| (31) Priority Document No | :61/682,729 |
| (32) Priority Date | :13/08/2012 |
| (33) Name of priority country | :U.S.A. |
| (86) International Application No | :PCT/NZ2013/000142 |
| Filing Date | :13/08/2013 |
| (87) International Publication No | :WO 2014/027899 |
| (61) Patent of Addition to Application Number | :NA |
| Filing Date | :NA |
| (62) Divisional to Application Number | :NA |
| Filing Date | :NA |

(71)**Name of Applicant :**
**1)OTAGO INNOVATION LIMITED**
Address of Applicant :87 St David Street Dunedin New Zealand
(72)**Name of Inventor :**
**1)ESPINER, Eric Arnold**
**2)PRICKETT, Timothy Charles Ramsey**

(57) Abstract :
The present disclosure relates to methods for the prognosis and/or diagnosis of vascular related disorders in a subject and in particular pregnancy related vascular disorders. The present disclosure is based on the finding that a positive correlation exists between positive prediction of a vascular disorder event in a subject and the concentration of the circulating marker NTproCNP (also referred to as NT CNP) in humans and animals. In addition, the present disclosure is based on the finding that there is also a positive correlation between the occurrence of a vascular related adverse event during pregnancy and the concentration of the circulating marker NTproCNP in the maternal circulation.

No. of Pages : 67 No. of Claims : 42

(12) PATENT APPLICATION PUBLICATION
(19) INDIA
(22) Date of filing of Application :25/09/2014
(21) Application No.987/KOL/2014 A
(43) Publication Date : 17/07/2015

(54) Title of the invention : SUPPORT RING FOR ENCLOSED SWITCHGEAR AND ENCLOSED SWITCHGEAR.

(51) International classification :H02B1/30
(31) Priority Document No :10 2013 220 182.6
(32) Priority Date :07/10/2013
(33) Name of priority country :Germany
(86) International Application No :NA
Filing Date :NA
(87) International Publication No : NA
(61) Patent of Addition to Application Number :NA
Filing Date :NA
(62) Divisional to Application Number :NA
Filing Date :NA

(71)**Name of Applicant :**
**1)SIEMENS AKTIENGESELLSCHAFT**
Address of Applicant :WITTELSBACHERPLATZ 2, 80333 MÜNCHEN, Germany
(72)**Name of Inventor :**
**1)STEFAN KERN**
**2)ANDREAS RÖβLER**

(57) Abstract :
Support ring for enclosed switchgear and enclosed switchgear To form a support ring (9) for enclosed switchgear (1), which has at least two housing components (2, 3) connected to one another at flanges (6, 7), which support ring makes possible a low-cost construction of the switchgear, a support ring (9) is proposed for enclosed switchgear (1) which has at least two housing components (2, 3) connected to one another at flanges (6, 7), which support ring (9) is disposed between the two flanges (6, 7) to support the two flanges (6, 7) against one another and to hold a sealing element (8) for gas-tight sealing of the connection and is made of insulating material. Furthermore enclosed switchgear (1) with such a support ring (9) is proposed.

No. of Pages : 11 No. of Claims : 5

(12) PATENT APPLICATION PUBLICATION
(19) INDIA
(22) Date of filing of Application :25/09/2014
(21) Application No.988/KOL/2014 A
(43) Publication Date : 17/07/2015

(54) Title of the invention : EXHAUST GAS TREATMENT DEVICE.

(51) International classification :F01N3/029
(31) Priority Document No :DE 10 2013 219 640.1
(32) Priority Date :27/09/2013
(33) Name of priority country :Germany
(86) International Application No :NA
Filing Date :NA
(87) International Publication No : NA
(61) Patent of Addition to Application Number :NA
Filing Date :NA
(62) Divisional to Application Number :NA
Filing Date :NA

(71)**Name of Applicant :**
**1)EBERSPÄCHER EXHAUST TECHNOLOGY GMBH & CO.KG**
Address of Applicant :HOMBURGER STR.95,66539 NEUNKIRCHEN, Germany
(72)**Name of Inventor :**
**1)MARCUS WERNI**
**2)SIMON EHLER**
**3)KIRILL KARELIN**

(57) Abstract :
The invention relates to an exhaust gas treatment device (1) having an inlet pipe (2) for introducing a combustion waste gas, an outlet pipe for discharging a combustion waste gas, a substantially gas-tight inner housing (7), which is flow- connected to the inlet pipe (2) on one side and to the outlet pipe on the other side, for accommodating a particulate filter (4), a connection element (9), which is arranged in a connection region (8) of the inner housing (7) that faces the outlet pipe (3) in terms of flow, for mechanically connecting the particulate filter (4) to the inner housing (7), and an oxidation catalyst (5), which is arranged upstream of the particulate filter (4) in the inner housing (7), for catalysis of an oxidation reaction of the combustion waste gas. Structurally flexible counterpressure monitoring is made possible by a counterpressure measurement point (10, 11, 12), which is provided between the oxidation catalyst (5) and the connection element (9) in terms of flow, for measuring a counterpressure exerted by the particulate filter (4) during operation of the exhaust gas treatment device (1). The invention also relates to an internal combustion engine (24) having such a device (1).

No. of Pages : 21 No. of Claims : 18

(12) PATENT APPLICATION PUBLICATION
(21) Application No.417/KOLNP/2015 A
(19) INDIA
(22) Date of filing of Application :18/02/2015
(43) Publication Date : 17/07/2015

(54) Title of the invention : METHOD AND APPARATUS FOR TRANSRECEIVING DOWNLINK SIGNAL BY CONSIDERING ANTENNA PORT RELATIONSHIP IN WIRELESS COMMUNICATION SYSTEM

(51) International classification :H04L27/26
(31) Priority Document No :61/709,975
(32) Priority Date :04/10/2012
(33) Name of priority country :U.S.A.
(86) International Application No :PCT/KR2013/008875
Filing Date :04/10/2013
(87) International Publication No :WO 2014/054904
(61) Patent of Addition to Application Number :NA
Filing Date :NA
(62) Divisional to Application Number :NA
Filing Date :NA

(71)**Name of Applicant :**
**1)LG ELECTRONICS INC.**
Address of Applicant :20 Yeouido-dong Yeongdeungpo-gu, Seoul 150-721 Republic of Korea
(72)**Name of Inventor :**
**1)PARK, Jonghyun**
**2)KIM, Kijun**
**3)SEO, Hanbyul**

(57) Abstract :
The present invention relates to a wireless communication system, and more specifically disclosed are a method and an apparatus for transmitting or receiving a downlink signal by considering an antenna port relationship. A method for user equipment decoding an enhanced physical downlink control channel (EPDCCH) in the wireless communication system, according to one embodiment of the present invention comprises the steps of: determining a quasi co location (QCL) of an antenna port of the EPDCCH; and decoding the EPDCCH based on the QCL with respect to the antenna port of the EPDCCH. The user equipment can determine a QCL assumption between an antenna port of an EPDCCH demodulation reference signal and an antenna port of a different reference signal based on the type of a QCL assumption with respect to a PDSCH.

No. of Pages : 109 No. of Claims : 13

(12) PATENT APPLICATION PUBLICATION
(19) INDIA
(22) Date of filing of Application :20/02/2015
(21) Application No.447/KOLNP/2015 A
(43) Publication Date : 17/07/2015

(54) Title of the invention : TUNABLE ANTENNAS FOR HANDHELD DEVICES

| | |
|---|---|
| (51) International classification | :H01Q 1/24,H01Q 5/00 |
| (31) Priority Document No | :11/516,433 |
| (32) Priority Date | :05/09/2006 |
| (33) Name of priority country | :U.S.A. |
| (86) International Application No | :PCT/US2007/014078 |
| Filing Date | :14/06/2007 |
| (87) International Publication No | :WO/2008/030286 |
| (61) Patent of Addition to Application Number | :NA |
| Filing Date | :NA |
| (62) Divisional to Application Number | :599/KOLNP/2009 |
| Filed on | :16/02/2009 |

(71)**Name of Applicant :**
**1)APPLE INC.**
Address of Applicant :1 INFINITE LOOP M/S 40-PAT, CUPERTINO, CALIFORNIA 95014 U.S.A.
(72)**Name of Inventor :**
**1)ZHANG, ZHIJUN**
**2)CABALLERO, RUBEN**

(57) Abstract :
The invention relates to a tunable multiport antenna circuitry comprising: a substantially planar radiating element; a circuit board having a ground conductive path and first and second antenna feed conductive paths; a ground electrical connecting structure that connects the ground conductive path to the radiating element and serves as a ground terminal for the radiating element; a first feed electrical connecting structure that electrically connects the first feed conductive path on the circuit board to the radiating element at a first location and serves as a first feed terminal for the radiating element, wherein the first feed terminal and the ground terminal form a first antenna port through which antenna signals are transmitted and received; and a second feed electrical connecting structure that electrically connects the second feed conductive path on the circuit board to the radiating element at a second location distinct from the first location and serves as a second feed terminal for the radiating element, wherein the second feed terminal and the second ground terminal form a second antenna port through which antenna signals are transmitted and received, and a method for using a tunable multiport antenna in a handheld electronic device

No. of Pages : 56 No. of Claims : 12

(12) PATENT APPLICATION PUBLICATION
(19) INDIA
(22) Date of filing of Application :24/02/2015
(21) Application No.479/KOLNP/2015 A
(43) Publication Date : 17/07/2015

(54) Title of the invention : SYSTEM AND METHOD FOR FUNDS TRANSFER PROCESSING

(51) International classification :G06Q20/40
(31) Priority Document No :13/556,704
(32) Priority Date :24/07/2012
(33) Name of priority country :U.S.A.
(86) International Application No :PCT/US2013/051692
Filing Date :23/07/2013
(87) International Publication No :WO 2014/018537
(61) Patent of Addition to Application Number :NA
Filing Date :NA
(62) Divisional to Application Number :NA
Filing Date :NA

(71)**Name of Applicant :**
**1)ADAPTIVE PAYMENTS, INC.**
Address of Applicant :1843 N.e. 26th Avenue, Fort Lauderdale, FL 33305 U.S.A.
(72)**Name of Inventor :**
**1)KAPUR, Shashi**
**2)BIANCO, Ralph, A.**

(57) Abstract :
A system and method for processing lending transactions that may facilitate prompt transfer of funds (for example loan funds) to an individual in a secure manner. An adaptive payment server may receive first identification information second identification information and a request for a fund transfer. The adaptive payment server may determine an account associated with the first identification information. The adaptive payment server may authenticate identification of the account based on the second identification information. The adaptive payment server may initiate a deposit of a fund amount associated with the request into the identified account wherein the fund amount is deposited substantially immediately after the identified account has been authenticated.

No. of Pages : 43 No. of Claims : 14

(12) PATENT APPLICATION PUBLICATION
(19) INDIA
(22) Date of filing of Application :16/03/2015
(21) Application No.703/KOLNP/2015 A
(43) Publication Date : 17/07/2015

(54) Title of the invention : METAL RECOVERY METHOD

(51) International classification :C21C1/02,B22D43/00
(31) Priority Document No :2012-207721
(32) Priority Date :21/09/2012
(33) Name of priority country :Japan
(86) International Application No :PCT/JP2013/070163
Filing Date :25/07/2013
(87) International Publication No :WO 2014/045710
(61) Patent of Addition to Application Number :NA
Filing Date :NA
(62) Divisional to Application Number :NA
Filing Date :NA

(71)**Name of Applicant :**
**1)NISSHIN STEEL CO., LTD.**
Address of Applicant :4-1, Marunouchi 3-chome, Chiyoda-ku, Tokyo 1008366 Japan
(72)**Name of Inventor :**
**1)YOSHINO, TAKAHIRO**
**2)SUGIURA, MASAYUKI**
**3)MORI, MASAKAZU**
**4)TADA, SHINTAROU**

(57) Abstract :
Provided is a metal recovery method in which, after pouring molten iron from a ladle (6) into a converter, metal (6b) that has adhered to the ladle (6) is dropped into the ladle (6) while said ladle is on the production line, and molten iron from an electric furnace is poured on the ladle (6) into which the metal (6b) has been dropped so that the metal (6b) is dissolved and recovered for use as material.

No. of Pages : 21 No. of Claims : 3

(12) PATENT APPLICATION PUBLICATION
(19) INDIA
(22) Date of filing of Application :16/03/2015
(21) Application No.704/KOLNP/2015 A
(43) Publication Date : 17/07/2015

(54) Title of the invention : OPTICALLY ACTIVE LAYER, ORGANIC SOLAR CELL COMPRISING OPTICALLY ACTIVE LAYER, AND METHOD FOR MANUFACTURING SAME

(51) International classification :H01L51/44,H01L51/48
(31) Priority Document No :PCT/KR2012/007932
(32) Priority Date :28/09/2012
(33) Name of priority country :Republic of Korea
(86) International Application No :PCT/KR2013/008716
Filing Date :27/09/2013
(87) International Publication No :WO 2014/051397
(61) Patent of Addition to Application Number :NA
Filing Date :NA
(62) Divisional to Application Number :NA
Filing Date :NA

(71)**Name of Applicant :**
**1)LG CHEM, LTD.**
Address of Applicant :128, Yeoui-daero, Yeongdeungpo-gu, Seoul 150-721 Republic of Korea
(72)**Name of Inventor :**
**1)LEE, HANGKEN**
**2)JEON, JI HYE**
**3)LEE, JAECHOL**
**4)WANG, DONG HWAN**
**5)PARK, JONG HYEOK**
**6)PARK, O OK**

(57) Abstract :
The present invention provides an optically active layer, an organic solar cell comprising the optically active layer, and a method for manufacturing same, wherein the optically active layer comprises an electron acceptor material and an electron donor material, and wherein the method for manufacturing same comprises a step of swelling the electron acceptor material and the electron donor material with a nonsolvent.

No. of Pages : 83 No. of Claims : 46

(12) PATENT APPLICATION PUBLICATION
(19) INDIA
(22) Date of filing of Application :09/09/2014
(21) Application No.923/KOL/2014 A
(43) Publication Date : 17/07/2015

(54) Title of the invention : APPARATUS AND METHODS FOR THE WASHING OF FABRICS

(51) International classification :D06B3/26
(31) Priority Document No :MI2013A001492
(32) Priority Date :10/09/2013
(33) Name of priority country :Italy
(86) International Application No :NA
Filing Date :NA
(87) International Publication No : NA
(61) Patent of Addition to Application Number :NA
Filing Date :NA
(62) Divisional to Application Number :NA
Filing Date :NA

(71)**Name of Applicant :**
**1)BIELLA SHRUNK PROCESS S.A.S. DI PIETRO ALBERTO & C.**
Address of Applicant :VIA MARCONI 101 13854 QUAREGNA BI Italy
(72)**Name of Inventor :**
**1)ALBERTO MICHELE**

(57) Abstract :
The invention relates to an apparatus (100) for the washing of fabrics in a continuous and open mode, said apparatus (100) comprising at least one processing unit (10) that extends in a longitudinal direction (L) of the apparatus (100), said processing unit (10) comprising a plurality of cylinders that define a washing path extending from an inlet (11) to an outlet (12) thereof. Said at least one processing unit (10) further comprises a first and a second perforated moving surfaces (20, 21) configured to receive a fabric (F) to be treated between them, said moving surfaces (20, 21) being supported by sets of cylinders comprising both cylinders (40; 50, 60) of said washing path and further cylinders (41; 61), each moving surface forming a closed loop path with said cylinders and at least one of said cylinders (40, 41, 60, 61) being a driven cylinders, wherein said closed loop paths share the same cylinders (40; 50, 60) which define said washing path. The processing unit (10) further comprises a plurality of first and second nozzles (30, 31) arranged along the entire washing path and facing the perforated moving surfaces (20, 21), said nozzles (30, 31) being connected to sources of washing fluids and being configured for dispensing said fluids at pressures comprised between 5 and 50 bar, preferably between 8 and 15 bar, and at flow rates comprised between 10.000 and 50.000, preferably between 20.000 and 40.000, liters/hour per linear meter of fabric in the direction of its width. The invention also relates to a washing method carried out by said washing apparatus.

No. of Pages : 18 No. of Claims : 10

(12) PATENT APPLICATION PUBLICATION
(19) INDIA
(22) Date of filing of Application :18/02/2015
(21) Application No.414/KOLNP/2015 A
(43) Publication Date : 17/07/2015

(54) Title of the invention : METHODS FOR TREATING OR PREVENTING ASTHMA BY ADMINISTERING AN IL-4R ANTAGONIST

| | |
|---|---|
| (51) International classification | :C07K16/28,A61K39/395,C12Q1/68 |
| (31) Priority Document No | :61/691,625 |
| (32) Priority Date | :21/08/2012 |
| (33) Name of priority country | :U.S.A. |
| (86) International Application No | :PCT/US2013/055747 |
| Filing Date | :20/08/2013 |
| (87) International Publication No | :WO 2014/031610 |
| (61) Patent of Addition to Application Number | :NA |
| Filing Date | :NA |
| (62) Divisional to Application Number | :NA |
| Filing Date | :NA |

(71)**Name of Applicant :**
**1)SANOFI**
Address of Applicant :54 rue La Boétie, F-75013 Paris France
**2)REGENERON PHARMACEUTICALS INC.**
(72)**Name of Inventor :**
**1)ARDELEANU, Marius**
**2)GANDHI, Namita**
**3)GRAHAM, Neil**
**4)KIRKESSELI, Stephane, C.**
**5)KUNDU, Sudeep**
**6)RADIN, Allen**
**7)ROCKLIN, Ross, E.**
**8)WEINSTEIN, Steven**
**9)DAVIDSON HAMILTON, Jennifer**
**10)MING, Jeffrey**

(57) Abstract :
The present invention provides methods for treating or preventing asthma and associated conditions in a patient. The methods of the present invention comprise administering to a subject in need thereof a therapeutic composition comprising an interleukin 4 receptor (IL 4R) antagonist such as an anti IL 4R antibody.

No. of Pages : 109 No. of Claims : 131

(12) PATENT APPLICATION PUBLICATION
(21) Application No.480/KOL/2011 A
(19) INDIA
(22) Date of filing of Application :04/04/2011
(43) Publication Date : 17/07/2015

(54) Title of the invention : A SYNERGISTIC HERBAL EXTRACT COMPOSITION FOR USE IN TREATING AND PREVENTING JAUNDICE

(51) International classification :A61K36/48
(31) Priority Document No :NA
(32) Priority Date :NA
(33) Name of priority country :NA
(86) International Application No :NA
Filing Date :NA
(87) International Publication No : NA
(61) Patent of Addition to Application Number :NA
Filing Date :NA
(62) Divisional to Application Number :NA
Filing Date :NA

(71)**Name of Applicant :**
**1)KATHARA, KULLHA**
Address of Applicant :VIL. TAINSI, VIA VIL. ANTULIA (ATHAMALIK), DIST. ANGUL-759127, ORISSA India
(72)**Name of Inventor :**
**1)KATHARA, KULLHA**

(57) Abstract :
The present invention relates to a novel synergistic herbal extract composition comprising therapeutically effective amounts of extracts of whole plant of Diplocyclos palmatus,leaves of acacia concinna,barks of alstonia scholaris,roots of Argemone mexicana,roots of Asparagus racemosus,leaves of Holarrhena antidysenterica and leaves of Equisetum debile for use in treating and preventing jaundice in a subject in need thereof.The present invention also relates to a process for the preparation of such composition.

No. of Pages : 21 No. of Claims : 7

(12) PATENT APPLICATION PUBLICATION
(19) INDIA
(22) Date of filing of Application :27/02/2015
(21) Application No.516/KOLNP/2015 A
(43) Publication Date : 17/07/2015

(54) Title of the invention : MULTIFUNCTIONAL ORAL VACCINE BASED ON CHROMOSOME RECOMBINEERING

(51) International classification :C12N1/21,C12N15/31,A61K35/74
(31) Priority Document No :61/701,939
(32) Priority Date :17/09/2012
(33) Name of priority country :U.S.A.
(86) International Application No :PCT/US2013/059980
Filing Date :16/09/2013
(87) International Publication No :WO 2014/043637
(61) Patent of Addition to Application Number :NA
Filing Date :NA
(62) Divisional to Application Number :NA
Filing Date :NA

(71)**Name of Applicant :**
**1)THE UNITED STATES OF AMERICA, AS REPRESENTED BY THE SECRETARY, DEPARTMENT OF HEALTH AND HUMAN SERVICES**
Address of Applicant :6011 Executive Boulevard, Suite 325, Rockville, Maryland 20852 U.S.A.
(72)**Name of Inventor :**
**1)DHARMASENA, Madushini Nirosha**
**2)KOPECKO, Dennis J.**

(57) Abstract :
A recombineered Salmonella typhi Ty21a compositions and vaccines comprising such a Ty21a and a method for recombineering comprising inserting a large antigenic region into a bacterial chromosome for the purpose of making multivalent vaccines to protect against one or more disease agents are described herein.

No. of Pages : 83 No. of Claims : 36

(12) PATENT APPLICATION PUBLICATION
(21) Application No.5169/KOLNP/2011 A
(19) INDIA
(22) Date of filing of Application :24/12/2011
(43) Publication Date : 17/07/2015

(54) Title of the invention : NOVEL BENZENESULFONAMIDE COMPOUNDS  METHOD FOR SYNTHESIZING SAME  AND USE THEREOF IN MEDICINE AS WELL AS IN COSMETICS

(51) International classification :A61P 25/00
(31) Priority Document No :0954460
(32) Priority Date :30/06/2009
(33) Name of priority country :France
(86) International Application No :PCT/FR2010/051331
Filing Date :28/06/2010
(87) International Publication No : NA
(61) Patent of Addition to Application Number :NA
Filing Date :NA
(62) Divisional to Application Number :NA
Filing Date :NA

(71)**Name of Applicant :**
**1)GALDERMA RESEARCH & DEVELOPMENT**
Address of Applicant :2400 Route des Colles Les Templiers F-06410 Biot France
(72)**Name of Inventor :**
**1)CLARY Laurence**
**2)CHAMBON Sandrine**
**3)CHANTALAT Laurent**
**4)ROSIGNOLI Carine**
**5)ROYE Olivier**
**6)PASCAL Jean-Claude**
**7)SCHUPPLI Marlène**

(57) Abstract :
The present invention relates to novel benzenesulfonamide compounds having a structure of general formula (I) below: as well as to the method for synthesizing same and to the use thereof in pharmaceutical compositions to be used in human or veterinary medicine, as well as to the use thereof in cosmetic compositions.

No. of Pages : 62 No. of Claims : 17

(12) PATENT APPLICATION PUBLICATION
(21) Application No.929/KOL/2014 A
(19) INDIA
(22) Date of filing of Application :12/09/2014
(43) Publication Date : 17/07/2015

(54) Title of the invention : INFINITELY VARIABLE CONTINUOSLY VARIABLE 3D FRACTAL GEARING SYSTEM

(51) International classification :F16H1/00
(31) Priority Document No :61/960,370
(32) Priority Date :17/09/2013
(33) Name of priority country :U.S.A.
(86) International Application No :NA
Filing Date :NA
(87) International Publication No : NA
(61) Patent of Addition to Application Number :NA
Filing Date :NA
(62) Divisional to Application Number :NA
Filing Date :NA

(71)**Name of Applicant :**
**1)SHERIF FAHMY ELDEEB**
Address of Applicant :4017 4TH ST.NE COLUMBIA HEIGHTS MINNESOTA, 55421 U.S.A.
(72)**Name of Inventor :**
**1)ELDEEB, SHERIF FAHMY**

(57) Abstract :
Geometrically and mathematically novel combination of 3D fractal geometric forms , referred as fractal gears, which exist in a variety of forms and are arranged in a multiplicity of configurations to provide a group of CVT , gearing and bearing systems. Fractal gears are composed of various three dimensional geometric compositions by a specified three dimensional profile surface. Fractal gear system assemblies form a infinitely and continuously variable rotating and precessing gearing system and have other potential applications where there is rotational motion such as differentials , bearings , and gears. Fractal gear systems assemblies , referred as FGS , are made up of a number of fractal gear form elements arranged together in three dimensional arrays. The geometric compositions are solids , and may also be hollow with a thin wall , and are amenable to varying material properties , for use in a large range of novel CVT and gearing applications.

No. of Pages : 51 No. of Claims : 9

(12) PATENT APPLICATION PUBLICATION
(19) INDIA
(22) Date of filing of Application :20/02/2015
(21) Application No.453/KOLNP/2015 A
(43) Publication Date : 17/07/2015

(54) Title of the invention : GEM IDENTIFICATION METHOD AND APPARATUS USING DIGITAL IMAGING VIEWER

(51) International classification :G02B27/02
(31) Priority Document No :61/695,746
(32) Priority Date :31/08/2012
(33) Name of priority country :U.S.A.
(86) International Application No :PCT/US2013/057619
Filing Date :30/08/2013
(87) International Publication No :WO 2014/036460
(61) Patent of Addition to Application Number :NA
Filing Date :NA
(62) Divisional to Application Number :NA
Filing Date :NA

(71)**Name of Applicant :**
**1)GEMEX SYSTEMS, INC.**
Address of Applicant :6040-A West Executive Drive, Mequon, WI 53092-4481 U.S.A.
(72)**Name of Inventor :**
**1)WAGNER, Randall**
**2)SCHOECKERT, Kurt**
**3)ZHAO, Xianghong**
**4)CASSENS, Glenn**

(57) Abstract :
A system and an apparatus for capturing a digital image of a particular gemstone from which specific and unique data can be extracted using digital image processing analysis, which data is used to positively identify a single gemstone from a database of gemstone images. This invention relates to the identification of specific gemstones, and in particular to the identification of such gemstones using a digital imaging viewer.

No. of Pages : 34 No. of Claims : 11

(12) PATENT APPLICATION PUBLICATION
(21) Application No.590/KOLNP/2015 A
(19) INDIA
(22) Date of filing of Application :09/03/2015
(43) Publication Date : 17/07/2015

(54) Title of the invention : TRANSFER DECORATING MACHINE AND METHOD FOR TRANSFERRING AN IMAGE

(51) International classification :B28B11/00,B05C5/00,B05C19/00
(31) Priority Document No :MO2012A000224
(32) Priority Date :20/09/2012
(33) Name of priority country :Italy
(86) International Application No :PCT/IB2013/058632
Filing Date :18/09/2013
(87) International Publication No :WO 2014/045208
(61) Patent of Addition to Application Number :NA
Filing Date :NA
(62) Divisional to Application Number :NA
Filing Date :NA

(71)**Name of Applicant :**
**1)SYSTEM S.P.A.**
Address of Applicant :Via Ghiarola Vecchia 73, I-41042 Fiorano Modenese (modena) Italy
(72)**Name of Inventor :**
**1)STEFANI, Franco**
**2)CAMORANI, Carlo Antonio**

(57) Abstract :
A transfer decorating machine that utilises powdered material or granules comprises: a mobile rest surface (10), on which the objects to be decorated are translated according to a predetermined direction; a device for the application of a decoration, operating above the mobile rest surface (10) and provided with a mobile transfer belt (3), which is a closed loop between movement rollers (2, 20) having mutually parallel axes, and serves the function of receiving a decoration realised with powdered material or granules (9) and then transferring it on objects to be decorated. Said device comprises a first unit (100) suitable for composing a decoration on the transfer belt (3) and a second unit (200) that carries out the transfer of the decoration from the transfer belt (3) onto an object to be decorated. The transfer belt (3) is commanded to move in a direction concordant with that of the mobile rest surface (10). The second unit (200) comprises a section located in the lower part of the transfer belt (3) that has the external side thereof facing downwards and facing, at a predetermined distance, a surface to be decorated (11) of an object lying on the mobile rest surface (10). This section extends between a curved surface of an abutment (17, 2) and a movement roller (20). There are means operating correspondingly on the internal side of the said section of the transfer belt (3) to direct jets of air towards it, said jets of air generating a situation of turbulence.

No. of Pages : 20 No. of Claims : 18

(12) PATENT APPLICATION PUBLICATION
(19) INDIA
(22) Date of filing of Application :17/01/2014
(21) Application No.71/KOL/2014 A
(43) Publication Date : 17/07/2015

(54) Title of the invention : A FIXTURE AND A PROCESS FOR DRILLING LOCKING HOLES WITH THE SAME ON A ROTOR FOR FIXING THE FANS IN TARI TYPE TURBO GENERATOR BY HORIZONTAL BORING MACHINE.

| | |
|---|---|
| (51) International classification | :B23K 9/00 |
| (31) Priority Document No | :NA |
| (32) Priority Date | :NA |
| (33) Name of priority country | :NA |
| (86) International Application No | :NA |
| Filing Date | :NA |
| (87) International Publication No | : NA |
| (61) Patent of Addition to Application Number | :NA |
| Filing Date | :NA |
| (62) Divisional to Application Number | :NA |
| Filing Date | :NA |

(71)**Name of Applicant :**
**1)BHARAT HEAVY ELECTRICALS LIMITED**
Address of Applicant :REGIONAL OPERATIONS DIVISION (ROD),PLOT:9/1,DJ BLOCK,3RD FLOOR, KARUNAMOYEE, SALT LAKE CITY,KOLKATA-700091. West Bengal India
(72)**Name of Inventor :**
**1)RAJBIR SINGH**
**2)VINOD KUMAR**
**3)SIDDHARTA GHOSH**

(57) Abstract :
The fixture (F) for making locking holes is made of a metallic fork (1) having one side arc shaped for welding with a metal bush (12) which has a hole at the middle to a accommodate a threaded nut (4) which has a knuhe diameter (6) in one end and a threaded part (5) at the other. A plate (2) is fixed to the metallic fork (1). The plate (2) has the guiding holes to guide the drill bit. The nut (4) is disposed in the Fan holes of the rotor. The thread of the nut matches with that of the Fan holes. The fixture is clamped on the rotor by tightening the thread of the part (5) with the help of knurled dia .(6) which acts as a collar while sitting on the face of the metal bush (12). The guiding holes of the plate (2) guides the drill bit for producing the required locking holes (11) of the rotor.

No. of Pages : 11 No. of Claims : 3

(12) PATENT APPLICATION PUBLICATION
(19) INDIA
(22) Date of filing of Application :09/03/2015
(21) Application No.595/KOLNP/2015 A
(43) Publication Date : 17/07/2015

(54) Title of the invention : DISC BRAKE PAD MOUNTING AND RETENTION SYSTEM AND METHOD

(51) International classification :F16D65/092
(31) Priority Document No :13/588,481
(32) Priority Date :17/08/2012
(33) Name of priority country :U.S.A.
(86) International Application No :PCT/US2013/054684
Filing Date :13/08/2013
(87) International Publication No :WO 2014/028458
(61) Patent of Addition to Application Number :NA
Filing Date :NA
(62) Divisional to Application Number :NA
Filing Date :NA

(71)**Name of Applicant :**
**1)BENDIX SPICER FOUNDATION BRAKE LLC**
Address of Applicant :901 Cleveland Street, Elyria, OH 44035 U.S.A.
(72)**Name of Inventor :**
**1)PLANTAN, Ronald, S.**
**2)RADHAKRISHNAN, Harish**
**3)WOLF, Dennis, A.**
**4)LANTZ, Richard L.**
**5)ROBERTS, Will, E.**
**6)BELL, Steven, C.**

(57) Abstract :
A system and method are provided for mounting, removing and retaining brake pads in disc brakes, such as air operated disc brakes utilized on commercial vehicles, in a manner which does not require the use of separate brake pad retaining devices while providing positive retention of the brake pad. A preferred embodiment includes a brake caliper mount having brake pad abutment surfaces having radially oriented and lateral grooves which permit a brake pad with corresponding projections on is lateral sides to be inserted through an opening of the brake caliper into the radially oriented grooves until the backing plate projections are aligned with the lateral groove, and advancing the brake actuator behind the brake pad to place the brake pad in an operating position in which the actuator prevents the brake pad from realigning with the radially oriented grooves until the actuator is retracted to permit brake pad extraction.

No. of Pages : 31 No. of Claims : 19

(12) PATENT APPLICATION PUBLICATION
(19) INDIA
(22) Date of filing of Application :12/03/2015
(21) Application No.659/KOLNP/2015 A
(43) Publication Date : 17/07/2015

(54) Title of the invention : PORTABLE MEDIA PLAYER AND METHOD OF AUTOMATICALLY UPDATING A PODCAST

(51) International classification :G06F 17
(31) Priority Document No :60/683056
(32) Priority Date :21/05/2005
(33) Name of priority country :U.S.A.
(86) International Application No :PCT/US2006/017768
Filing Date :08/05/2006
(87) International Publication No :WO/2006/127258
(61) Patent of Addition to Application Number :NA
Filing Date :NA
(62) Divisional to Application Number :4700/KOLNP/2007
Filed on :04/12/2007

(71)**Name of Applicant :**
**1)APPLE INC.**
Address of Applicant :1 INFINITE LOOP, CUPERTINO, CALIFORNIA 95014 U.S.A.
(72)**Name of Inventor :**
**1)NEUMANN, DAVID LAWRENCE**
**2)VEROSUB, ELLIS, M.**
**3)MIRRASHIDI, PAYAM**
**4)LEFFERT, JONATHAN**
**5)MILLER, MARK**

(57) Abstract :
Improved techniques that facilitate use of podcasts are disclosed. The improved techniques can pertain to creating, publishing, hosting, accessing, subscribing, managing, transferring, and/or playing podcasts. According to one aspect, a client application can facilitate discovery of a podcast of interest from a plurality of podcasts, subscribe to the podcast of interest, and provide subsequent management of the podcast of interest. The management of the podcast of interest can include acquiring updated podcast data with little or no user interaction required. According to another aspect, some or all podcasts locally available to a client application can be copied (e.g., synchronized) with a portable media device so that the podcasts can be conveniently available and played by either the client application or the portable media device

No. of Pages : 66 No. of Claims : 17

(12) PATENT APPLICATION PUBLICATION
(19) INDIA
(22) Date of filing of Application :16/03/2015
(21) Application No.715/KOLNP/2015 A
(43) Publication Date : 17/07/2015

(54) Title of the invention : COMPOSITIONS FOR TREATING TEXTILE FIBERS AND FLOOR COVERINGS COMPRISING THE SAME

(51) International classification :D06M15/233,D06M15/277,D06M15/31
(31) Priority Document No :61/713,319
(32) Priority Date :12/10/2012
(33) Name of priority country :U.S.A.
(86) International Application No :PCT/US2013/064562
Filing Date :11/10/2013
(87) International Publication No :WO 2014/059288
(61) Patent of Addition to Application Number :NA
Filing Date :NA
(62) Divisional to Application Number :NA
Filing Date :NA

(71)**Name of Applicant :**
**1)PEACH STATE LABS, INC.**
Address of Applicant :180 Burlington Road, Rome, GA 30162 U.S.A.
(72)**Name of Inventor :**
**1)SARGENT, RALPH R.**
**2)WILLIAMS, MICHAEL S.**
**3)GRIGAT, MICHAEL**
**4)HULLENDER, BILLY LEE**
**5)ALLEN, STEVE**

(57) Abstract :
In one aspect, compositions are described herein which, in some embodiments, can improve or enhance the oil and soiling resistance of textile fibers, including fibers used in carpet and floor coverings. A composition described herein, in some embodiments, comprises a fluoropolymer component, a hydrophilic soil release polymeric component and a hardening component comprising one or more polymeric species having a glass transition temperature (Tg) greater than about 85°C.

No. of Pages : 30 No. of Claims : 42

(12) PATENT APPLICATION PUBLICATION
(21) Application No.713/KOLNP/2015 A
(19) INDIA
(22) Date of filing of Application :16/03/2015
(43) Publication Date : 17/07/2015

(54) Title of the invention : ELECTRIC VARIABLE-AIR-VOLUME DIFFUSER

(51) International classification :F24F7/00,F24F13/06
(31) Priority Document No :61/692,532
(32) Priority Date :23/08/2012
(33) Name of priority country :U.S.A.
(86) International Application No :PCT/US2013/056483
Filing Date :23/08/2013
(87) International Publication No :WO 2014/032013
(61) Patent of Addition to Application Number :NA
Filing Date :NA
(62) Divisional to Application Number :NA
Filing Date :NA

(71)**Name of Applicant :**
**1)ACUTHERM, LLC**
Address of Applicant :1766 Sabre Street, Hayward, CA 94545 U.S.A.
(72)**Name of Inventor :**
**1)KO, MEIKO**
**2)KLINE, ROBERT**
**3)HERZOG, KURT**

(57) Abstract :
A variable-air-volume (VAV) diffuser includes a diffuser housing that is formed for coupling to a supply air conduit. The diffuser housing defines a discharging opening for discharge of supply air from the supply air conduit into a room. The VAV diffuser may also include a supporting structure that is affixed to the diffuser housing, and a flow controller for varying the volume of supply air discharged through the discharging opening. The VAV diffuser may further include an electric actuator that is mounted on the supporting structure for moving the flow controller to vary the volume of supply air. The electric actuator may be accessible from room side and removable from the diffuser housing while the diffuser housing is coupled to the supply air conduit the supporting structure is affixed to the diffuser housing and the flow controller remains within the diffuser housing.

No. of Pages : 36 No. of Claims : 22

(12) PATENT APPLICATION PUBLICATION
(19) INDIA
(22) Date of filing of Application :16/03/2015
(21) Application No.714/KOLNP/2015 A
(43) Publication Date : 17/07/2015

(54) Title of the invention : THERMOSTAT

(51) International classification :F23K5/00,F23N5/14,F23N5/02
(31) Priority Document No :MI2012A001633
(32) Priority Date :01/10/2012
(33) Name of priority country :Italy
(86) International Application No :PCT/IB2013/059000
Filing Date :30/09/2013
(87) International Publication No :WO 2014/053981
(61) Patent of Addition to Application Number :NA
Filing Date :NA
(62) Divisional to Application Number :NA
Filing Date :NA

(71)**Name of Applicant :**
**1)DEFENDI ITALY S.R.L.**
Address of Applicant :Via Direttissima del Conero, 29, I-60021 Camerano Italy
(72)**Name of Inventor :**
**1)BESATI, DAVIDE**
**2)DUGNANI, MASSIMO**
**3)PEDRETTI, LUCA**
**4)TAPPA, MAURO**
**5)VALZI, GIUSEPPE (DECEASED)**

(57) Abstract :
The invention relates to a thermostat (10) for cooking appliances powered by gas, said thermostat (10) comprising a body (20) within which there are formed an inlet conduit (23) and an outlet conduit (24), suitable to receive a gas flow from a supply source and to supply such a gas flow to a gas burner, respectively, as well as a chamber (25) with a substantially cylindrical shape arranged in fluid communication with said inlet conduit (23). The chamber (25) is also arranged in fluid communication with said outlet conduit (24) either directly, through a main opening (70) formed at one end thereof, or indirectly through a secondary conduit (71) that is formed in the body (20) of the thermostat (10) and flows into the outlet conduit (24) bypassing said main opening (70), said main opening and secondary conduit (70, 71) being respectively dimensioned for a maximum and a minimum flow rate of gas. The thermostat (10) further comprises a one piece valve (80) for adjusting the gas flow rate the valve being coaxially fitted in the chamber (25) and guided by its peripheral walls. Thanks to these features, the structural configuration of the thermostat body and its conduits is much more compact functional and cheap than the structural configuration of thermostats known in the art.

No. of Pages : 21 No. of Claims : 12

(12) PATENT APPLICATION PUBLICATION
(21) Application No.712/KOLNP/2015 A
(19) INDIA
(22) Date of filing of Application :16/03/2015
(43) Publication Date : 17/07/2015

(54) Title of the invention : A DEVICE FOR THE CARE OF RESPIRATORY DISEASES AND FOR THE IMPROVEMENT OF PULMONARY FUNCTION

| | |
|---|---|
| (51) International classification | :A61M 16/16<br>A61M16/20 |
| (31) Priority Document No | :12397523.7 |
| (32) Priority Date | :13/09/2012 |
| (33) Name of priority country | :EPO |
| (86) International Application No | :PCT/EP2013/068864 |
| Filing Date | :12/09/2013 |
| (87) International Publication No | :WO 2014/041047 |
| (61) Patent of Addition to Application Number | :NA |
| Filing Date | :NA |
| (62) Divisional to Application Number | :NA |
| Filing Date | :NA |

(71)**Name of Applicant :**
**1)HAPELLA OY**
Address of Applicant :LOUNAJANTIE 4 FIN-74700 KIURUVESI Finland
(72)**Name of Inventor :**
**1)KÄRKKÄINEN, AULIS**

(57) Abstract :
The present invention relates to a device (1) comprising at least a first flow channel (5) and a liquid space (3) for a liquid. The device (1) also comprises a second flow channel (7) arranged in a flow connection with the liquid space (3), and a steam space (4) arranged to receive steam forming in the liquid space (3). The first flow channel (5) is arranged in a flow connection with the steam space (4). The device (1) also comprises means (8) for conveying a gas flow from the outside of the device (1) via the second flow channel (7) to the liquid space (3), and means (6) for conveying a gas flow from the steam space (4) via the first flow channel (5) to the out- side of the device (1). Furthermore, the invention relates to a method in the device (1). In the method, a gas flow to the device (1) is conveyed via the second flow channel (7) to the liquid space (3). Resistance is induced to the exhaled gas flow flowing through the second flow channel (7) and pressure is increased in the liquid space (3). As a result of the pressure increase, steam produced in the liquid space (3) is received in the steam space (4). The gas flow is conveyed from the steam space (4) via the first flow channel (5) to the outside of the device (1).

No. of Pages : 26 No. of Claims : 19

# Publication Under Section 43(2) in Respect of the Grant

**Following Patents have been granted and any person interested in opposing these patents under Section 25(2) may at any time within one year from the date of this issue, give notice to the Controller of Patents at the appropriate office, on the prescribed form-7 along with written statement and evidence, if any.**

| Serial Number | Patent Number | Application Number | Date of Application | Date of Priority | Title of Invention | Name of Patentee | Date of Publication of Abstract u/s 11(A) | Appropriate Office |
|---|---|---|---|---|---|---|---|---|
| 1 | 267280 | 874/DEL/2008 | 03/04/2008 | 08/10/2007 | IMAGE MEDIUM CARTRIDGE AND METHOD FOR DETERMINING VOLUME OF IMAGING MEDIUM IN CARTRIDGE | DELL PRODUCTS L.P. | 19/06/2009 | DELHI |
| 2 | 267296 | 6365/DELNP/2007 | 22/02/2006 | 07/03/2005 | METHODS FOR OXIDIZING ORGANIC COMPOUNDS WITH OXYGEN IN THE PRESENCE OF CATALYST | DAICEL CORPORATION | 31/08/2007 | DELHI |
| 3 | 267297 | 4899/DELNP/2008 | 12/12/2006 | 12/12/2005 | POWDER COMPOSITIONS FOR INHALATION | JAGOTEC AG | 08/08/2008 | DELHI |
| 4 | 267298 | IN/PCT/2001/00791 /DEL | 25/02/1999 | 31/08/2000 | A MEANS FOR THE PROPHYLACTIC AND THERAPEUTIC TREATMENT OF STREPTOCOCCAL INFECTION | NEW HORIZONS DIAGNOSTICS, INC. | 25/05/2007 | DELHI |
| 5 | 267301 | 7208/DELNP/2009 | 05/05/2008 | 11/05/2007 | AMINO-HETEROCYCLIC COMPOUNDS | PFIZER INC. | 04/05/2012 | DELHI |
| 6 | 267302 | 6437/DELNP/2008 | 11/01/2007 | 12/01/2006 | A M.TUBERCULOSIS COMPRISING (A) A NLAA GENE DELETION AND (B) A SECA2 GENE DELETION | ALBERT EINSTEIN COLLEGE OF MEDICINE OF YESHIVA UNIVERSITY,,THE UNIVERSITY OF NORTH CAROLINA AT CHAPEL HILL, | 24/10/2008 | DELHI |
| 7 | 267308 | 4772/DELNP/2007 | 27/04/2000 | 29/04/1999 | A TOTHBRUSH HAVING A USER MANIPULATABLE HEAD | COLGATE PALMOLIVE COMPANY | 17/08/2007 | DELHI |
| 8 | 267317 | 6869/DELNP/2009 | 03/04/2008 | 24/04/2007 | PIGMENTS FOR NON-AQUEOUS INKS AND COATINGS | SUN CHEMICAL CORPORATION | 18/06/2010 | DELHI |
| 9 | 267319 | 2891/DELNP/2009 | 15/10/2007 | 03/11/2009 | STABLE OFFSET EMULSION INKS CONTAINING WATER TOLERANT EMULSION STABILIZER | SUN CHEMICAL CORPORATION | 19/06/2009 | DELHI |

| | | | | | | | | |
|---|---|---|---|---|---|---|---|---|
| 10 | 267321 | 8635/DELNP/2007 | 15/05/2006 | 28/06/2005 | POLYMERIZATION PROCESS USING SPRAY-DRIED CATALYST | UNIVATION TECHNOLOGIES, LLC. | 14/12/2007 | DELHI |
| 11 | 267323 | 349/DELNP/2007 | 04/07/2005 | 05/07/2004 | 'SPHERICAL CATALYST COMPONENT FOR OLEFIN POLYMERIZATION REACTION AND CATALYST THEREOF' | CHINA PETROLEUM & CHEMICAL CORPORATION,BEIJING RESEARCH INSTITUTE OF CHEMICAL INDUSTRY, CHINA PETROLEUM & CHEMICAL CORPORATION | 17/08/2007 | DELHI |
| 12 | 267324 | 7462/DELNP/2009 | 09/07/2008 | 10/07/2007 | SURFACTANT COMPOSITION | KAO CORPORATION | 02/07/2010 | DELHI |
| 13 | 267347 | 3749/DELNP/2011 | 16/11/2009 | 21/11/2008 | METHOD OF REDUCING REDOX RATIO OF MOLTEN GLASS AND ULTRA-CLEAR GLASS MADE THEREBY | PPG INDUSTRIES OHIO, INC. | 06/04/2012 | DELHI |
| 14 | 267348 | 729/DELNP/2010 | 25/07/2008 | 01/08/2007 | SILICA POWDER PROCESS FOR ITS PRODUCTION, AND COMPOSITION EMPLOYING IT | DENKI KAGAKU KOGYO KABUSHIKI KAISHA | 23/08/2013 | DELHI |
| 15 | 267362 | 9966/DELNP/2008 | 13/07/2007 | 31/07/2006 | METHOD AND APPARATUS FOR CONTROLLING STATIC CHARGE IN POLYOLEFIN REACTORS | UNIVATION TECHNOLOGIES, LLC | 20/03/2009 | DELHI |
| 16 | 267367 | 1131/DELNP/2009 | 27/09/2007 | 28/09/2006 | ABSORPTION RECOVERY PROCESSING OF FCC-PRODUCED LIGHT OLEFINS | UOP LLC | 20/08/2010 | DELHI |
| 17 | 267368 | 1735/DELNP/2003 | 18/04/2002 | 18/04/2002 | PROVESS FOR PREPARING AN ELASTOMERIC POLYURETHANE MATERIAL | HUNTSMAN INTERNATIONAL LLC, | 14/10/2005 | DELHI |
| 18 | 267371 | 7017/DELNP/2007 | 29/03/2006 | 30/03/2005 | AN ACRYLONITRILE COMPOUND OR A SALT THEREOF AS BCRP INHIBITORS | KABUSHIKI KAISHA YAKULT HONSHA | 05/10/2007 | DELHI |
| 19 | 267373 | 1324/DELNP/2009 | 01/01/1900 | 12/09/2006 | WHEEL AND ROLL ASSEMBLY FOR HOT GLASS HEET CONVEYANCE | GLASSTECH, INC. | 12/06/2009 | DELHI |
| 20 | 267374 | 7637/DELNP/2008 | 14/03/2007 | 15/03/2006 | METHOD FOR MAKING SILICON FOR SOLAR CELLS AND OTHER APPLICATIONS | REACTION SCIENCES, INC. | 24/10/2008 | DELHI |

| | | | | | | | | |
|---|---|---|---|---|---|---|---|---|
| 21 | 267375 | 1142/DELNP/2009 | 16/10/2007 | 17/10/2006 | METHOD FOR THE PRODUCTION OF ALPHA-KETO ACIDS AND ESTERS THEREOF | GE HEALTHCARE AS | 20/08/2010 | DELHI |
| 22 | 267378 | 5097/DELNP/2009 | 22/02/2007 | 22/02/2007 | FUEL GASIFICATION SYSTEM | IHI CORPORATION | 12/03/2010 | DELHI |
| 23 | 267379 | 1223/DEL/2008 | 16/05/2008 | 16/01/2008 | METHOD OF DRUMHEAD IMAGINIG | REMO, INC. | 07/08/2009 | DELHI |
| 24 | 267384 | 907/DEL/2006 | 30/03/2006 | | A PROCESS FOR PRODUCTION OF CRYSTALLINE BEOHMITE BY PRECIPITATING FROM SUPERSATURATED SODIUM ALUMINATE LIQUOR | Council of Scientific and Industrial Research. | 01/04/2011 | DELHI |
| 25 | 267388 | 6719/DELNP/2007 | 20/11/2003 | 26/11/2002 | A HERBICIDAL SYNERGISTIC COMPOSITIONS | SYNGENTA PARTICIPATIONS AG | 28/09/2007 | DELHI |
| 26 | 267389 | 7721/DELNP/2008 | 15/02/2007 | 15/02/2006 | SOFTENING AGENT FOR PAPER AND METHOD FOR MAKING PAPER BY USING SAME | NOF CORPORATION | 24/10/2008 | DELHI |
| 27 | 267390 | 4247/DELNP/2007 | 27/09/2005 | 27/09/2005 | LEAD STORAGE BATTERY AND MANUFACTURING METHOD OF THE SAME | THE FURUKAWA BATTERY CO.,LTD | 10/08/2007 | DELHI |
| 28 | 267392 | 1428/DEL/2007 | 05/07/2007 12:58:13 | 21/07/2006 | TABLE TYPE LARGE-SIZE IMAGING APPARATUS | CHOI HAE-YONG | 25/01/2008 | DELHI |
| 29 | 267393 | 54/DELNP/2006 | 20/05/2005 | 21/05/2004 | A HEADPHONE APPARATUS | SONY CORPORATION | 24/08/2007 | DELHI |
| 30 | 267394 | 1709/DELNP/2007 | 26/08/2005 | 08/09/2004 | LIQUID DISTRIBUTOR AND LIQUID COLLECTOR FOR CHROMATOGRAPHY COLUMNS | BAYER TECHNOLOGY SERVICES GMBH | 03/08/2007 | DELHI |
| 31 | 267397 | 1429/DEL/2007 | 05/07/2007 12:58:13 | 13/07/2006 | BRAND-SHAPED IMAGE-DISPLAY ADVERTISING APPARATUS | CHOL HAE-YONG | 25/01/2008 | DELHI |
| 32 | 267400 | 4381/DELNP/2009 | 02/05/2002 | 02/05/2001 | A SUSTAINED-RELEASE ORAL COMPOSITION | EURO-CELTIQUE S.A. | 27/04/2012 | DELHI |
| 33 | 267401 | 109/DELNP/2010 | 11/03/2004 | 31/03/2003 | EXPANDABLE VINYLAROMATIC POLYMERS AND PROCESS FOR THEIR PREPARATION | POLIMERI EUROPA S.P.A | 06/08/2010 | DELHI |

# Publication Under Section 43(2) in Respect of the Grant

**Following Patents have been granted and any person interested in opposing these patents under Section 25(2) may at any time within one year from the date of this issue, give notice to the Controller of Patents at the appropriate office, on the prescribed form-7 along with written statement and evidence, if any.**

| Serial Number | Patent Number | Application Number | Date of Application | Date of Priority | Title of Invention | Name of Patentee | Date of Publication of Abstract u/s 11(A) | Appropriate Office |
|---|---|---|---|---|---|---|---|---|
| 1 | 267294 | 1901/MUM/2010 | 29/06/2010 16:33:41 | | ANTIMICROBIAL FINISH ON FABRICS | RELIANCE INDUSTRIES LIMITED., | 27/07/2012 | MUMBAI |
| 2 | 267300 | 964/MUMNP/2008 | 12/12/2006 | 14/12/2005 | ONE POT SYNTHESIS OF TETRAZOLE DERIVATIVES OF SIROLIMUS | ABBOTT LABORATORIES | 18/07/2008 | MUMBAI |
| 3 | 267304 | 2388/MUMNP/2011 | 27/05/2010 | 29/05/2009 | HOT-DIP AL-ZN COATED STEEL SHEET | JFE STEEL CORPORATION | 03/02/2012 | MUMBAI |
| 4 | 267311 | 2383/MUMNP/2010 | 27/04/2009 | 30/04/2008 | METHOD FOR THE PRODUCTION OF WATER-REACTIVE AL FILM AND CONSTITUEND MEMBER FOR FILM-FORMING CHAMBER | ULVAC, INC. | 04/03/2011 | MUMBAI |
| 5 | 267316 | 1021/MUMNP/2007 | 20/01/2006 | 21/01/2005 | TECHNIQUE FOR RADIO RESOURCE MANAGEMENT | TELEFONAKTIEBOLAGET LM ERICSSON (PUBL) | 10/08/2007 | MUMBAI |
| 6 | 267318 | 635/MUMNP/2009 | 19/10/2007 | 19/10/2006 | PROGRAMMABLE BLENDING IN A GRAPHICS PROCESSING UNIT • | QUALCOMM INCORPORATED | 22/05/2009 | MUMBAI |
| 7 | 267336 | 1434/MUMNP/2008 | 14/12/2006 | 23/12/2005 | SELECTING KEY FRAMES FROM VIDEO FRAMES | QUALCOMM INCORPORATED | 19/09/2008 | MUMBAI |
| 8 | 267337 | 1072/MUMNP/2009 | 05/03/2008 | 15/03/2007 | MULTIPLE FUSE DEVICE FOR VEHICLE | PACIFIC ENGINEERING CORPORATION | 19/11/2010 | MUMBAI |
| 9 | 267345 | 1963/MUMNP/2008 | 14/03/2007 | 14/03/2006 | APPARATUS AND METHOD FOR PERFORMING RESOURCE ALLOCATION AND COMMUNICATION IN A WIRELESS COMMUNICATION SYSTEM, AND SYSTEM USING THE SAME | SAMSUNG ELECTRONICS CO., LTD. | 16/01/2009 | MUMBAI |
| 10 | 267353 | 78/MUM/2011 | 10/01/2011 | | PROCESS FOR PREPARATION OF ACETALS | RELIANCE INDUSTRIES LTD. | 17/08/2012 | MUMBAI |

| | | | | | | | | |
|---|---|---|---|---|---|---|---|---|
| 11 | 267359 | 1237/MUM/2005 | 30/09/2005 | | CHISELS FOR DIAMOND SAWING DEVICES | SANJEEV KHANDELWAL,VINAY KUMAR TRIPATHI | 27/07/2007 | MUMBAI |
| 12 | 267361 | 2640/MUMNP/2008 | 19/06/2007 | 23/06/2006 | METHOD OF NETWORK SELECTION FOR A WIRELESS USER DEVICE IN RADIO COMMUNICATION | NOKIA SOLUTIONS AND NETWORKS GMBH & CO. KG | 13/03/2009 | MUMBAI |
| 13 | 267372 | 311/MUM/2008 | 12/02/2008 | 13/02/2007 | A GAS REGULATOR WITH A MECHANISM FOR COMMUNICATION OF PRESSURE TO AN INDICATOR GAUGE | JAIN ANAND KUMAR | 12/06/2009 | MUMBAI |
| 14 | 267382 | 606/MUM/2007 | 30/03/2007 | | A PROCESS FOR PHARMACEUTICAL COMPOSITION COMPRISING DICLOFENAC AND MISOPROSTOL | WOCKHARDT LIMITED | 15/05/2009 | MUMBAI |
| 15 | 267387 | 1749/MUMNP/2008 | 22/02/2007 | 23/02/2006 | METHOD OF SPEED MANAGEMENT AND CONTROL OF A VEHICLE THROUGH A WIRELESS DEVICE ON A WIRELESS NETWORK | OMNITRACS, LLC. | 10/10/2008 | MUMBAI |

# Publication Under Section 43(2) in Respect of the Grant

**Following Patents have been granted and any person interested in opposing these patents under Section 25(2) may at any time within one year from the date of this issue, give notice to the Controller of Patents at the appropriate office, on the prescribed form-7 along with written statement and evidence, if any.**

| Serial Number | Patent Number | Application Number | Date of Application | Date of Priority | Title of Invention | Name of Patentee | Date of Publication of Abstract u/s 11(A) | Appropriate Office |
|---|---|---|---|---|---|---|---|---|
| 1 | 267279 | 3535/CHENP/2007 | 03/06/2005 | 11/02/2005 | STRETCH WOVEN FABRICS | INVISTA TECHNOLOGIES S.A.R.L. | 16/11/2007 | CHENNAI |
| 2 | 267281 | 5046/CHENP/2007 | 07/04/2006 | 08/04/2005 | METHOD FOR PRODUCING SATURATED NITRILES | BASF AKTIENGESELLSCHAFT | 27/06/2008 | CHENNAI |
| 3 | 267286 | 2504/CHENP/2008 | 12/10/2006 | 21/10/2005 | GLASS SHEET FORMING SYSTEM AND METHOD | GLASSTECH, INC. | 06/03/2009 | CHENNAI |
| 4 | 267287 | 392/CHE/2010 | 16/02/2010 14:58:51 | 18/02/2009 | "METHOD FOR MANUFACTURING MOULDED AND CODED CONFECTIONS" | KRAFT FOODS R & D, INC | 27/08/2010 | CHENNAI |
| 5 | 267289 | 3079/CHENP/2007 | 12/01/2006 | 12/01/2005 | A WELLBORE CABLE | SCHLUMBERGER TECHNOLOGY B.V | 16/11/2007 | CHENNAI |
| 6 | 267290 | 1881/CHENP/2007 | 03/11/2005 | 03/11/2004 | IMPROVED METHOD OF MANUFACTURING AN ALLOYED FILM AND APPARATUS FOR THE METHOD | RASMUSSEN, OLE-BENDT | 31/08/2007 | CHENNAI |
| 7 | 267291 | 1542/CHE/2007 | 18/07/2007 16:24:05 | 27/07/2006 | PROCESS FOR THE PREPARATION OF POLYALKENYL ACYLATING AGENTS | ENI S.P.A | 11/09/2009 | CHENNAI |
| 8 | 267292 | 181/CHE/2009 | 28/01/2009 | | AN ELECTRONIC PROJECTION DEVICE WITH MULTISATELLITE SIGNAL RECEPTION CAPABILITY | HARSHA MAHABALA | 06/08/2010 | CHENNAI |
| 9 | 267293 | 7035/CHENP/2008 | 18/05/2007 | 19/05/2006 | PROCESS FOR THE PREPARATION OF N-ACETYL-D-MANNOSAMINE MONOHYDRATE | INALCO S.P.A., | 27/03/2009 | CHENNAI |
| 10 | 267295 | 3816/CHENP/2008 | 11/12/2006 | 22/12/2005 | METHOD OF PRODUCING ACRYLIC ACID BY THE HETEROGENEOUSLY CATALYSED PARTIAL GAS PHASE OXIDATION OF PROPYLENE | BASF SE | 13/03/2009 | CHENNAI |

| | | | | | | | | |
|---|---|---|---|---|---|---|---|---|
| 11 | 267299 | 855/CHENP/2008 | 26/07/2006 | 10/08/2005 | A METHOD OF INITIATING A SECURE CONNECTION IN DATA NETWORKS | RIVERBED TECHNOLOGY, INC. | 28/11/2008 | CHENNAI |
| 12 | 267303 | 2796/CHENP/2009 | 25/10/2007 | 25/10/2006 | POLYOLEFIN DISPERSIONS, FROTHS, AND FOAMS | DOW GLOBAL TECHNOLOGIES,LLC | 21/08/2009 | CHENNAI |
| 13 | 267305 | 799/CHENP/2007 | 26/08/2005 | 27/08/2004 | A METHOD OF SELECTING A CARDIOMYOCYTE USING INTRACELLULAR MITOCHONDRIA AS AN INDICATOR | DAIICHI SANKYO COMPANY LIMITD,KEIO UNIVERSITY | 24/08/2007 | CHENNAI |
| 14 | 267309 | 5292/CHENP/2007 | 26/09/2003 | 26/09/2002 | INFORMATION INPUTTING / OUTPUTTING METHOD AND DEVICE | YOSHIDA, Kenji | 27/06/2008 | CHENNAI |
| 15 | 267310 | 2184/CHENP/2008 | 03/10/2006 | 03/10/2005 | QUINAZOLINE DERIVATIVE AND PHARMACEUTICAL | NIPPON SHINYAKU CO., LTD. | 06/03/2009 | CHENNAI |
| 16 | 267313 | 3620/CHENP/2008 | 10/01/2007 | 02/02/2006 | PROCESS FOR THE PREPARATION OF DISPERSIONS OF CROSS-LINKING AGENTS IN WATER | STAHL INTERNATIONAL B.V. | 13/03/2009 | CHENNAI |
| 17 | 267314 | 2299/CHENP/2008 | 08/11/2006 | 11/11/2005 | MACHINE FOR CONTINUOUS TREATMENT OF A FABRIC IN ROPE FORM AND RELATIVE METHOD | CORAMTEX S.R.L | 06/03/2009 | CHENNAI |
| 18 | 267322 | 1031/CHE/2008 | 25/04/2008 16:21:36 | | HOLE PLUG | PIOLAX INC. | 30/10/2009 | CHENNAI |
| 19 | 267325 | 420/CHE/2006 | 09/03/2006 12:02:05 | | DESIGNER COLOUR SHADES BY COMPUTER SIMULATION UTILITY | ELICO LIMITED | 28/12/2007 | CHENNAI |
| 20 | 267327 | 6016/CHENP/2007 | 01/06/2006 | 07/07/2005 | AN ADAPTOR FOR AN AIR COMPRESSOR AND AN AIR COMPRESSOR THEREOF | EARS Deutschland GmbH & Co. KG | 27/06/2008 | CHENNAI |
| 21 | 267328 | 5860/CHENP/2009 | 30/04/2008 | 18/05/2007 | CONTROL SYSTEM FOR INTERNAL COMBUSTION ENGINE | HONDA MOTOR CO., LTD. | 19/02/2010 | CHENNAI |
| 22 | 267329 | 1262/CHE/2007 | 18/06/2007 | | AN IMPROVED PROCESS FOR THE PREPARTION OF CEFCAPENE | ORCHID CHEMICALS & PHARMACEUTICALS LTD | 26/12/2008 | CHENNAI |
| 23 | 267330 | 478/CHE/2009 | 04/03/2009 | | A METHOD TO CONSTRUCT LIGHTWEIGHT SLABS AND PRE-FAB SLABS WITH SPHERES AND UNFOLD-ABLE THREE DIMENSIONAL SET TECHNICAL FIELD | LEVINTON, RICARDO HORACIO,LEVINTON, LUCIANA | 17/09/2010 | CHENNAI |

| | | | | | | | | |
|---|---|---|---|---|---|---|---|---|
| 24 | 267334 | 3173/CHE/2008 | 17/12/2008 15:33:35 | | SYSTEM AND METHOD FOR FILE EXCHANGE BETWEEN WIRELESS COMMUNICATION DEVICES | SCHNEIDER ELECTRIC INDUSTRIES SAS | 16/03/2012 | CHENNAI |
| 25 | 267335 | 2000/CHENP/2003 | 13/06/2002 | 15/06/2001 | CONFIGURABLE PATTERN OPTIMIZER | QUALCOMM Incorporated | 06/01/2006 | CHENNAI |
| 26 | 267338 | 1618/CHE/2005 | 08/11/2005 | | PERSISTENT MEMEORY MANIPULATION USING EFI | HEWLETT-PACKARD DEVELOPMENT COMPANY,L.P. | 28/09/2007 | CHENNAI |
| 27 | 267339 | 5855/CHENP/2007 | 10/05/2006 | 20/05/2005 | AN AQUEOUS CORROSION INHIBITOR | HENKEL AG & Co. KGaA | 27/06/2008 | CHENNAI |
| 28 | 267340 | 186/CHE/2009 | 28/01/2009 16:14:31 | 31/01/2008 | FUEL INJECTION SYSTEM OF INTERNAL COMBUSTION ENGINE | HONDA MOTOR CO., LTD. | 14/08/2009 | CHENNAI |
| 29 | 267344 | 6251/CHENP/2008 | 15/05/2007 | 17/05/2006 | A METHOD FOR PRODUCING BLEACHED PULP | MITSUBISHI GAS CHEMICAL COMPANY, INC. | 27/03/2009 | CHENNAI |
| 30 | 267349 | 3340/CHENP/2007 | 29/12/2005 | 29/12/2004 | PHARMACEUTICAL COMPOSTIONS COMPRISING XANTHURENIC ACID DERIVATIVE | NATURON, INC. | 09/11/2007 | CHENNAI |
| 31 | 267358 | 3912/CHENP/2006 | 18/03/2005 | 25/03/2004 | HIGH SPEED MULTIPLE LOOP DSL SYSTEM | ADAPTIVE SPECTRUM AND SIGNAL ALIGNMENT, INC. | 27/07/2007 | CHENNAI |
| 32 | 267363 | 1106/CHENP/2009 | 03/08/2007 | 04/08/2006 | PROCESSING MESSAGE TRAFFIC DIRECTED TO A TERMINATING SESSION INITIATION PROTOCOL (SIP) SERVER | TEKELEC, INC. | 29/05/2009 | CHENNAI |
| 33 | 267365 | 1357/CHENP/2008 | 26/09/2006 | 28/09/2005 | A REACTOR FOR TREATING A MATERIAL IN A MEDIUM | Commissariat a l'Energie Atomique | 28/11/2008 | CHENNAI |
| 34 | 267366 | 2809/CHENP/2007 | 07/11/2005 | 25/11/2004 | PLANT FOR RECOVERING A POLLUTING FLUID CONTAINED IN THE TANKS OF A SUNKEN VESSEL | JLMD Ecologic Group | 07/09/2007 | CHENNAI |
| 35 | 267369 | 6080/CHENP/2007 | 26/06/2006 | 30/06/2005 | CARTRIDGE FOR AUTOMATED MEDICAL DIAGNOSTICS | BIOCARTIS NV | 27/06/2008 | CHENNAI |
| 36 | 267370 | 5204/CHENP/2007 | 19/05/2005 | 19/05/2005 | METHOD AND PLANT FOR PRINTING A CHAIN OF WARP YARNS | GHERTEX S.R.L. | 11/01/2008 | CHENNAI |

| | | | | | | | | |
|---|---|---|---|---|---|---|---|---|
| 37 | 267381 | 42/CHENP/2007 | 01/07/2005 | 06/07/2004 | A MEASURING DEVICE FOR DETECTING SIGNALS OF AN IGNITION SYSTEM OF AN INTERNAL COMBUSTION ENGINE | ROBERT BOSCH GMBH | 17/08/2007 | CHENNAI |
| 38 | 267383 | 1438/CHENP/2008 | 18/09/2006 | 22/09/2005 | LUMINESCENCE SENSOR AND METHOD FOR DETECTION OF LUMINESCENCE RADIATION GENERATED BY LUMINOPHORE IN A MEDIUM | KONINKLIJKE PHILIPS ELECTRONICS N.V. | 28/11/2008 | CHENNAI |
| 39 | 267385 | 4295/CHENP/2008 | 13/04/2007 | 14/04/2006 | PSEUDO WIRES FOR MOBILITY MANAGEMENT | QUALCOMM INCORPORATED | 13/03/2009 | CHENNAI |

# Publication Under Section 43(2) in Respect of the Grant

**Following Patents have been granted and any person interested in opposing these patents under Section 25(2) may at any time within one year from the date of this issue, give notice to the Controller of Patents at the appropriate office, on the prescribed form-7 along with written statement and evidence, if any.**

| Serial Number | Patent Number | Application Number | Date of Application | Date of Priority | Title of Invention | Name of Patentee | Date of Publication of Abstract u/s 11(A) | Appropriate Office |
|---|---|---|---|---|---|---|---|---|
| 1 | 267282 | 3290/KOLNP/2007 | 25/03/2006 | 08/04/2005 | ELECTRICAL SWITCHGEAR ASSEMBLY AND BASIC MODULE FOR AN ELECTRICAL SWITCHGEAR ASSEMBLY | ABB PATENT GMBH | 04/07/2008 | KOLKATA |
| 2 | 267283 | 3292/KOLNP/2007 | 25/03/2006 | 07/04/2005 | ELECTRICAL LOW-VOLTAGE SWITCHGEAR ASSEMBLY | ABB PATENT GMBH | 31/10/2008 | KOLKATA |
| 3 | 267284 | 3295/KOLNP/2007 | 25/03/2006 | 08/04/2005 | MODULE FRONT FOR A SWITCHGEAR ASSEMBLY MODULE, SWITCHGEAR ASSEMBLY MODULE AND ELECTRICAL SWITCHGEAR ASSEMBLY | ABB PATENT GMBH | 31/10/2008 | KOLKATA |
| 4 | 267285 | 733/KOL/2006 | 21/07/2006 | 30/08/2005 | DATA MEMORY SYSTEM AND METHOD FOR TRANSFERRING DATA INTO A DATA MEMORY | QIMONDA AG | 29/06/2007 | KOLKATA |
| 5 | 267288 | 3355/KOLNP/2007 | 28/02/2005 | 28/02/2005 | EXTERNAL PLASTER CONTAINING FLURBIPROFEN | TEIKOKU SEIYAKU CO., LTD. | 01/02/2008 | KOLKATA |
| 6 | 267306 | 4240/KOLNP/2007 | 10/04/2006 | 14/04/2005 | SIR PREDICTION METHOD AND APPARATUS | TELEFONAKTIEBOLAGET LM ERICSSON (PUBL) | 02/01/2009 | KOLKATA |
| 7 | 267307 | 517/KOLNP/2007 | 16/09/2005 | 22/09/2004 | COMBINATION WEIGHER | KAWANISHI, SHOZO | 06/07/2007 | KOLKATA |
| 8 | 267312 | 1818/KOLNP/2006 | 30/12/2004 | 31/12/2003 | A METHOD OF MAKING A FENTANYL PHARMACETICAL COMPOSITION | CIMA LABS INC. | 11/05/2007 | KOLKATA |
| 9 | 267315 | 2398/KOLNP/2008 | 19/12/2006 | 20/12/2005 | SYNTHESIS OF EPIRUBICIN FROM 13-DIHYDRODAUNORUBICINE | SOLUX CORPORATION | 23/01/2009 | KOLKATA |

| | | | | | | | | |
|---|---|---|---|---|---|---|---|---|
| 10 | 267320 | 2704/KOLNP/2006 | 16/03/2004 | 16/03/2004 | WHEELED PATIENT TRANSPORT STRETCHER HAVING ATTENDANT-RETAINING TRANSPORT PLATFORM | LAGASSEY, PAUL | 01/06/2007 | KOLKATA |
| 11 | 267326 | 947/KOLNP/2007 | 18/08/2005 | 18/08/2004 | CLOSING DEVICE FOR FLEXIBLE AND ADJUSTABLE FASTENING | PRICKELL, AGN‰S | 13/07/2007 | KOLKATA |
| 12 | 267331 | 3665/KOLNP/2008 | 12/01/2007 | 10/02/2006 | MICROSPHERES | AKZO NOBEL N.V. | 20/02/2009 | KOLKATA |
| 13 | 267332 | 102/KOLNP/2007 | 25/07/2005 | 30/07/2004 | WATERPROOF AND BREATHABLE SOLE FOR SHOES | GEOX S.P.A. | 29/06/2007 | KOLKATA |
| 14 | 267333 | 3825/KOLNP/2007 | 06/04/2005 | 06/04/2005 | SECURITY PAPER OR SPECIAL PAPER COMPRISING HIGH-STRENGTH SYNTHETIC ELEMENTS, AND METHOD FOR MAKING SAME | FABRICA NACIONAL DE MONEDA Y TIMBRE - REAL CASA DE LA MONEDA | 21/03/2008 | KOLKATA |
| 15 | 267341 | 354/KOL/2007 | 12/03/2007 | 24/03/2006 | A PARTICULATE FILTER SYSTEM FOR EXHAUST SYSTEM OF AN ENGINE | GM GLOBAL TECHNOLOGY OPERATIONS, INC | 05/10/2007 | KOLKATA |
| 16 | 267342 | 1599/KOL/2007 | 26/11/2007 | 28/11/2006 | A HYBRID POWERTRAIN SYSTEM | GM GLOBAL TECHNOLOGY OPERATIONS, INC. | 11/07/2008 | KOLKATA |
| 17 | 267343 | 27/KOL/2008 | 04/01/2008 | 23/01/2007 | A CATALYTIC CONVERTER FOR REDUCING EMISSION FROM AUTOMOBILES | GM GLOBAL TECHNOLOGY OPERATIONS, INC. | 22/08/2008 | KOLKATA |
| 18 | 267346 | 1336/KOL/2006 | 11/12/2006 | 13/01/2006 | A STATICALLY SEALED HIGH PRESSURE FUEL PUMP AND ITS RELATED METHOD | GM GLOBAL TECHNOLOGY OPERATIONS,INC | 20/07/2007 | KOLKATA |
| 19 | 267350 | 1194/KOL/2007 | 30/08/2007 | 01/09/2006 | A TORQUE CONVERTER CONTROL SIMULATION SYSTEM | GM GLOBAL TECHNOLOGY OPERATIONS, INC. | 01/05/2009 | KOLKATA |
| 20 | 267351 | 2199/KOLNP/2007 | 04/01/2006 | 11/01/2005 | METHOD AND MEANS FOR OPERATING EVAPORATIVE COOLERS | F.F. SEELEY NOMINEES PTY LTD | 17/08/2007 | KOLKATA |
| 21 | 267352 | 1102/KOL/2005 | 02/12/2005 | 28/12/2004 | TURBOCHARGER OF VARIABLE TURBINE GEOMETRY | BORGWARNER, INC. | 19/06/2009 | KOLKATA |

| | | | | | | | | |
|---|---|---|---|---|---|---|---|---|
| 22 | 267354 | 735/KOL/2008 | 17/04/2008 | 04/06/2007 | A POWER TRANSMISSION HAVING FOUR PLANETARY GEAR SETS CONTROLLED BY FIVE TORQUE TRANSMITTING DEVICES TO PROVIDE EIGHT FORWARD SPEED RATIOS AND ONE REVERSE SPEED RATIO | GM GLOBAL TECHNOLOGY OPERATION INC. | 05/06/2009 | KOLKATA |
| 23 | 267355 | 1630/KOL/2008 | 23/09/2008 | 05/03/2008 | A METHOD OF REGENERATING A DIESEL PARTICULATE FILTER (DPF) OPERATING A DIESEL ENGINE OF A VEHICLE AT AN IDLE CONDITION TO INCREASE THE EXHAUST TEMPERATURE FOR REGENERATION | GM GLOBAL TECHNOLOGY OPERATIONS, INC. | 11/09/2009 | KOLKATA |
| 24 | 267356 | 210/KOLNP/2007 | 01/07/2005 | 02/07/2004 | VERTICAL-AXIS WIND TURBINE | VIMAK | 29/06/2007 | KOLKATA |
| 25 | 267357 | 1213/KOL/2006 | 14/11/2006 | 17/01/2006 | BRAKE STEERING METHOD AND APPARATUS | GM GLOBAL TECHNOLOGY OPERATIONS, INC. | 10/04/2009 | KOLKATA |
| 26 | 267360 | 409/KOL/2008 | 03/03/2008 | 20/04/2007 | A MULTI-SPEED TRANSMISSION | GM GLOBAL TECHNOLOGY OPERATIONS, INC. | 17/04/2009 | KOLKATA |
| 27 | 267364 | 1566/KOL/2008 | 10/09/2008 | | DEVELOPMENT OF CARBON-MANGANESE 440 MPA TENSILE STRENGTH STEEL | TATA STEEL LIMITED | 19/03/2010 | KOLKATA |
| 28 | 267376 | 2108/KOLNP/2007 | 15/12/2005 | 16/12/2004 | GLASS STRANDS CAPABLE OF REINFORCING ORGANIC AND/OR INORGANIC MATERIALS | OCV INTELLECTUAL CAPITAL LLC | 17/08/2007 | KOLKATA |
| 29 | 267377 | 255/KOL/2008 | 14/02/2008 15:17:24 | | A COMPUTERISED COKE OVEN HEATING CONTROL SYSTEM USING HEATING PAUSE TIME CONTROL TECHNIQUE | STEEL AUTHORITY OF INDIA LIMITED | 28/08/2009 | KOLKATA |
| 30 | 267380 | 754/KOL/2008 | 22/04/2008 16:34:39 | | WATER COOLED DIODE MODULE | BHARAT HEAVY ELECTRICALS LIMITED | 30/10/2009 | KOLKATA |

| | | | | | | | | |
|---|---|---|---|---|---|---|---|---|
| 31 | 267386 | 4078/KOLNP/2008 | 30/03/2007 | 08/05/2006 | METHOD AND APPARATUS FOR PROVIDING DOWNLINK ACKNOWLEDGMENTS AND TRANSMIT INDICATORS IN AN ORTHOGONAL FREQUENCY DIVISION MULTIPLEXING COMMUNICATION SYSTEM | MOTOROLA, INC. | 27/02/2009 | KOLKATA |
| 32 | 267391 | 266/KOLNP/2009 | 21/06/2007 | 21/06/2006 | CATALYST COMPOSITION FOR THE COPOLYMERIZATION OF PROPYLENE | TOTAL PETROCHEMICALS RESEARCH FELUY | 08/05/2009 | KOLKATA |
| 33 | 267395 | 373/KOLNP/2009 | 16/04/2007 | 04/08/2006 | REMOVING PERMANGANATE-REDUCING IMPURITIES FROM ACETIC ACID | LYONDELL CHEMICAL TECHNOLOGY, L.P. | 08/05/2009 | KOLKATA |
| 34 | 267396 | 3592/KOLNP/2007 | 28/03/2006 | 01/04/2005 | WIRELESS COMMUNICATION APPARATUS AND WIRELESS COMMUNICATION METHOD | NTT DOCOMO INC | 31/10/2008 | KOLKATA |
| 35 | 267398 | 3536/KOLNP/2007 | 01/03/2006 | 08/03/2005 | COUPLER WITH EDGE AND BROADSIDE COUPLED SECTIONS | WERLATONE, INC. | 31/10/2008 | KOLKATA |
| 36 | 267399 | 3455/KOLNP/2007 | 29/03/2006 | 01/04/2005 | CABLE MANAGEMENT BAR AND PATCH PANEL | ADC TELECOMMUNICATIONS, INC. | 18/01/2008 | KOLKATA |

***CONTINUED TO PART- 2***

*CONTINUED FROM PART- 1*

# INTRODUCTION

In view of the recent amendment made in the Designs (Amendment) Rules, 2008 with effect from 17/06/2008, Publication of the matter relating to Designs is being published in the Official Journal of The Patent Office. This Journal is being published on weekly basis on every Friday covering the various proceedings on Designs as required according to the provisions of under Rule 22, 25, 27 and 39 of the Design (Amendment) Rules, 2008. All the enquiries on this Official Journal and other information as required by the public should be addressed to the Controller General of Patents, Designs & Trade Marks. Suggestions and comments are requested from all quarters so that the content can be enriched.

# THE DESIGNS ACT 2000
# (SECTION 30)
# DESIGN ASSIGNMENT

**The Design stands in the name of KONINKLIJKE PHILIPS ELECTRONICS N.V. registered under the Designs Act, 2000 has been assigned in the Register of Designs in the name as follows:-**

| Design No. | Class | Name |
|---|---|---|
| 229342<br>229343<br>229344<br>229478<br>229477<br>229484<br>229480<br>229481<br>229483<br>229479<br>229482 | 14-01<br>229479, 229477,<br>229478 - (14-03) | WOOX INNOVATIONS BELGIUM NV, A PRIVATE COMPANY WITH LIMITED LIABILITY INCORPORATED UNDER THE LAWS OF BELGIUM WITH ITS CORPORATE SEAT IN ANDERLECHT, BELGIUM AND REGISTERED ADDRESS AT TWEESTATIONSSTRAAT 80, B-1070 ANDERLECHT, BELGIUM |

**The Design stands in the name of KONINKLIJKE PHILIPS ELECTRONICS N.V. registered under the Designs Act, 2000 has been assigned in the Register of Designs in the name as follows:-**

| Design No. | Class | Name |
|---|---|---|
| 229341<br>230604<br>230568 | 14-01<br>230604 - (14-02) | WOOX INNOVATIONS BELGIUM NV, A PRIVATE COMPANY WITH LIMITED LIABILITY INCORPORATED UNDER THE LAWS OF BELGIUM WITH ITS CORPORATE SEAT IN ANDERLECHT, BELGIUM AND REGISTERED ADDRESS AT TWEESTATIONSSTRAAT 80, B-1070 ANDERLECHT, BELGIUM |

# COPYRIGHT PUBLICATION

| SL NO | REGISTERED DESIGN NUMBERS | RENEWED ON |
|---|---|---|
| 1. | 259043 | 19.05.2015 |
| 2. | 256896 | 19.05.2015 |
| 3. | 256897 | 19.05.2015 |
| 4. | 191755 | 20.05.2015 |
| 5. | 198633 | 19.05.2015 |
| 6. | 198632 | 19.05.2015 |
| 7. | 197939 | 19.05.2015 |
| 8. | 197938 | 19.05.2015 |
| 9. | 199500 | 19.05.2015 |
| 10. | 200390 | 20.05.2015 |
| 11. | 200306 | 20.05.2015 |
| 12. | 199646 | 20.05.2015 |
| 13. | 194709 | 20.05.2015 |
| 14. | 193000 | 20.05.2015 |
| 15. | 191653 | 20.05.2015 |

# RESTORATION OF LAPSED DESIGNS
## UNDER SECTION 12 (2) OF THE DESIGNS ACT, 2000

An application made under Section 12 (2) of the Designs act, 2000 on **11.02.2014**, for Restoration of **Design No.191653 dated 27.03.2003** in the name of **MOLD-TEK TECHNOLOGIES LTD., AN INDIAN COMPANY, WHITE HOUSE, 402/1, 4TH FLOOR, 6-3-1192/1/1, KUNDANBAGH, BEGUMPET, HYDERABAD-500016 (A.P.), INDIA** has been allowed.

An application made under Section 12 (2) of the Designs act, 2000 on **03.03.2014**, for Restoration of **Design No.193000 dated 27.08.2003** in the name of **GALA BRUSH LIMITED, A COMPANY INCORPORATED UNDER THE INDIAN COMPANIES ACT, AT HINDUSTAN KOHINOOR INDL. COMPLEX, GROUND FLOOR, OPP: M.T.N.L. GENERAL MANAGER'S OFFICE, L.B.S. MARG, VIKHROLI (W), MUMBAI-400083, MAHARASHTRA, INDIA** has been allowed.

An application made under Section 12 (2) of the Designs act, 2000 on **10.10.2014**, for Restoration of **Design No.194709 dated 03.09.2003** in the name of **K.P.SANGHVI & SONS, A CORPORATION ORGANIZED AND EXISTING UNDER THE LAWS OF INDIA, HAVING AN OFFICE FOR THE TRANSACTION OF BUSINESS AT 1301, PRASAD CHAMBERS, OPERA HOUSE, MUMBAI-400004, INDIA** has been allowed.

An application made under Section 12 (2) of the Designs act, 2000 on **02.04.2014**, for Restoration of **Design No.191755 dated 04.04.2003** in the name of **CINNI FOUNDATION OF VARUNA GARDENS APARTMENTS, FLAT NO. 103, FIRST FLOOR, TOWER "A", CLUB ROAD, VARANASI-221002, U.P.** has been allowed.

# REGISTRATION OF DESIGNS

**The following designs have been registered. They are now open for public inspection. In the following each entry the Date of Registration is shown. The Priority Number, Priority Date and Priority Country are also shown**

| | |
|---|---|
| **DESIGN NUMBER** | 265251 |
| **CLASS** | 09-01 |
| **1)BEING HUMAN ENTERPRENUER,** 30, DONTAD STREET, 1ST FLOOR, KHADAK, MUMBAI-400009, AN INDIAN PROPRIETOR FIRM | |
| **DATE OF REGISTRATION** | 28/08/2014 |
| **TITLE** | BOTTLE |
| **PRIORITY NA** | |

| | |
|---|---|
| **DESIGN NUMBER** | 266600 |
| **CLASS** | 08-07 |
| **1)(1) RUPESHBHAI MANSUKHBHAI MANSARA (2) JAYESHBHAI GOBARBHAI SHEKHLIYA (3) CHETANBHAI LAVJIBHAI SINGHALA (ALL THE PARTNERS ARE ADULT AND INDIAN NATIONALS) PARTNERS OF JAY SOMNATH METAL (INDIAN PARTNERSHIP FIRM)** HAVING PLACE OF BUSINESS AT-3, MARUTI INDUSTRIAL AREA, KOTHARIA RING ROAD, B/S. MURLIDHAR WAYBRIDGE, N H NO. 8 B, RAJKOT-360003-GUJARAT,- (INDIA) | |
| **DATE OF REGISTRATION** | 10/10/2014 |
| **TITLE** | DOOR LATCH SET |
| **PRIORITY NA** | |

| | |
|---|---|
| **DESIGN NUMBER** | 268186 |
| **CLASS** | 12-15 |
| **1)PODDAR TYRES LIMITED, JUGIANA, G.T. ROAD, LUDHIANA-141420 (PUNJAB) INDIA** (AN INDIAN COMPANY DULY REGISTERED UNDER THE COMPANIES ACT, 1956) OF THE ABOVE ADDRESS | |
| **DATE OF REGISTRATION** | 15/12/2014 |
| **TITLE** | TYRE FOR BICYCLE |
| **PRIORITY NA** | |

| | |
|---|---|
| **DESIGN NUMBER** | 266718 |
| **CLASS** | 14-03 |
| **1)SHARP KABUSHIKI KAISHA, A JAPANESE CORPORATION OF** 22-22, NAGAIKE-CHO, ABENO-KU, OSAKA, JAPAN | |
| **DATE OF REGISTRATION** | 15/10/2014 |
| **TITLE** | TELEVISION |

**PRIORITY**

| PRIORITY NUMBER | DATE | COUNTRY |
|---|---|---|
| 2014-008386 | 17/04/2014 | JAPAN |

| | |
|---|---|
| **DESIGN NUMBER** | 267752 |
| **CLASS** | 11-02 |
| **1)(1) DR. JITEN P. BHATT (2) DR. DHARA BHATT (3) DR. PRIYAN BHATT (4) MISS JYOTI BHATT AND (5) DR. REENA BHATT ALL INDIAN NATIONAL PARTNERS OF PERCARE INDUSTRIES AN INDIAN PARTNERSHIP FIRM HAVING ITS PRINCIPAL PLACE OF BUSINESS AT ADDRESS:** 355, GIDC, MAKARPURA, VADODARA-390010, GUJARAT-INDIA | |
| **DATE OF REGISTRATION** | 27/11/2014 |
| **TITLE** | DECORATIVE ARTICLE |

**PRIORITY NA**

| | |
|---|---|
| **DESIGN NUMBER** | 263132 |
| **CLASS** | 14-02 |
| **1)HAND HELD PRODUCTS, INC.,** 700 VISIONS DR SKANEATELES FALLS, NY 13153-5312, USA | |
| **DATE OF REGISTRATION** | 05/06/2014 |
| **TITLE** | INDICIA SCANNER |

**PRIORITY**

| PRIORITY NUMBER | DATE | COUNTRY |
|---|---|---|
| 201330600382.8 | 05/12/2013 | CHINA |

| | |
|---|---|
| **DESIGN NUMBER** | 262679 |
| **CLASS** | 13-02 |
| **1)EXIDE INDUSTRIES LIMITED,** 59E, CHOWRINGHEE ROAD, KOLKATA-700 020, WEST BENGAL, INDIA, AN INDIAN COMPANY | |
| **DATE OF REGISTRATION** | 16/05/2014 |
| **TITLE** | BATTERY |
| **PRIORITY NA** | |

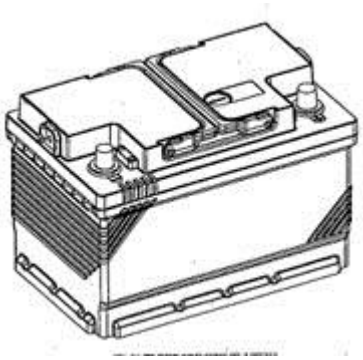

| | |
|---|---|
| **DESIGN NUMBER** | 267309 |
| **CLASS** | 10-04 |
| **1)NAMAN JAIN (DIRECTOR) NATIONALITY INDIAN TRADING AS FALCON AUTOTECH PVT. LTD. (COMPANY INCORPORATED UNDER COMPANIES ACT, 1956), INDIAN WHOES ADDRESS IS** 57, NIMRI COLONY, DOUBLE STOREYS, DELHI-110052 (INDIA) | |
| **DATE OF REGISTRATION** | 11/11/2014 |
| **TITLE** | DIMENSION & WEIGHT MEASURING INSTRUMENT |
| **PRIORITY NA** | |

| | |
|---|---|
| **DESIGN NUMBER** | 267442 |
| **CLASS** | 02-02 |
| **1)NATIONAL DRESS MANUFACTURING COMPANY; AN INDIAN COMPANY, HAVING ITS REGISTERED OFFICE AT** 306, PREMSONS INDUSTRIAL ESTATE, TAHIRA COMPOUND, GUFA ROAD, JOGESHWARI (E), MUMBAI-400 060, INDIA | |
| **DATE OF REGISTRATION** | 17/11/2014 |
| **TITLE** | RAINWEAR |
| **PRIORITY NA** | |

| | |
|---|---|
| **DESIGN NUMBER** | 267716 |
| **CLASS** | 13-02 |
| **1)SMA SOLAR TECHNOLOGY AG, A GERMAN COMPANY OF** SONNENALLEE 1, 34266 NIESTETAL, GERMANY | |
| **DATE OF REGISTRATION** | 26/11/2014 |
| **TITLE** | INVERTER |

**PRIORITY**

| PRIORITY NUMBER | DATE | COUNTRY |
|---|---|---|
| 002472555-0001 | 28/05/2014 | OHIM |

| | |
|---|---|
| **DESIGN NUMBER** | 199996 |
| **CLASS** | 19-06 |
| **1)LUXOR WRITING INSTRUMENTS (PVT.) LTD., AN INDIAN COMPANY** OF 229, OKHLA INDUSTRIAL ESTATE-III, NEW DELHI-110020, INDIA. | |
| **DATE OF REGISTRATION** | 20/06/2005 |
| **TITLE** | BALL PEN |
| **PRIORITY NA** | |

| | |
|---|---|
| **DESIGN NUMBER** | 265650 |
| **CLASS** | 26-05 |
| **1)HAVELLS INDIA LIMITED AN INDIAN NATIONAL COMPANY, HAVING REGISTERED OFFICE AT** 1, RAJ NARAIN MARG, CIVIL LINES, DELHI-110054 | |
| **DATE OF REGISTRATION** | 12/09/2014 |
| **TITLE** | DOWN LIGHTER |
| **PRIORITY NA** | |

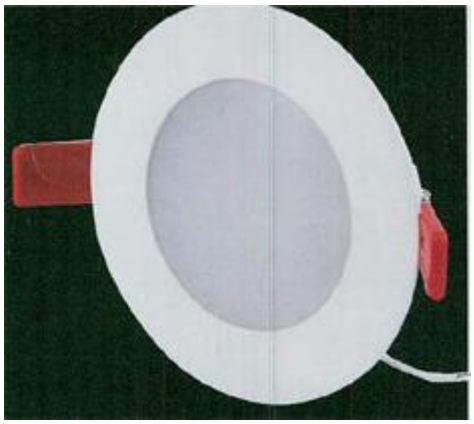

| | |
|---|---|
| **DESIGN NUMBER** | 266624 |
| **CLASS** | 07-05 |

**1)RASPHAL DHILLON , A NATIONAL OF UNITED KINGDOM,**
OF 39 FALCON ROAD, BATTERSEA, LONDON, SW11 2PH, UNITED KINGDOM

| | |
|---|---|
| **DATE OF REGISTRATION** | 10/10/2014 |
| **TITLE** | SHOE CLEANER |

**PRIORITY**

| PRIORITY NUMBER | DATE | COUNTRY |
|---|---|---|
| 002507970-0001 | 23/07/2014 | OHIM |

| | |
|---|---|
| **DESIGN NUMBER** | 263909 |
| **CLASS** | 24-01 |

**1)EYELOCK, INC., A CORPORATION ORGANIZED AND EXISTING UNDER THE LAWS OF UNITED STATES, OF**
355 LEXINGTON AVENUE, 12TH FLOOR, NEW YORK, NY 10017, UNITED STATES OF AMERICA

| | |
|---|---|
| **DATE OF REGISTRATION** | 07/07/2014 |
| **TITLE** | IMAGING DEVICE FOR IRIS |

**PRIORITY**

| PRIORITY NUMBER | DATE | COUNTRY |
|---|---|---|
| 29/478,513 | 06/01/2014 | U.S.A. |

| | |
|---|---|
| **DESIGN NUMBER** | 269304 |
| **CLASS** | 14-03 |

**1)SAMSUNG ELECTRONICS CO., LTD.**
129, SAMSUNG-RO, YEONGTONG-GU, SUWON-SI, GYEONGGI-DO, 443-742, REPUBLIC OF KOREA, A COMPANY OF REPUBLIC OF KOREA

| | |
|---|---|
| **DATE OF REGISTRATION** | 04/02/2015 |
| **TITLE** | HEADSET |

**PRIORITY**

| PRIORITY NUMBER | DATE | COUNTRY |
|---|---|---|
| 30-2014-0039819 | 14/08/2014 | REPUBLIC OF KOREA |

| | |
|---|---|
| **DESIGN NUMBER** | 267314 |
| **CLASS** | 08-03 |

**1)SUMITOMO ELECTRIC HARDMETAL CORP., A CORPORATION ORGANIZED AND EXISTING UNDER THE LAWS OF JAPAN, OF THE ADDRESS**
1-1, KOYAKITA 1-CHOME, ITAMI-SHI, HYOGO, JAPAN

| | |
|---|---|
| **DATE OF REGISTRATION** | 11/11/2014 |
| **TITLE** | CUTTING TOOL |

**PRIORITY**

| PRIORITY NUMBER | DATE | COUNTRY |
|---|---|---|
| 2014-010123 | 12/05/2014 | JAPAN |

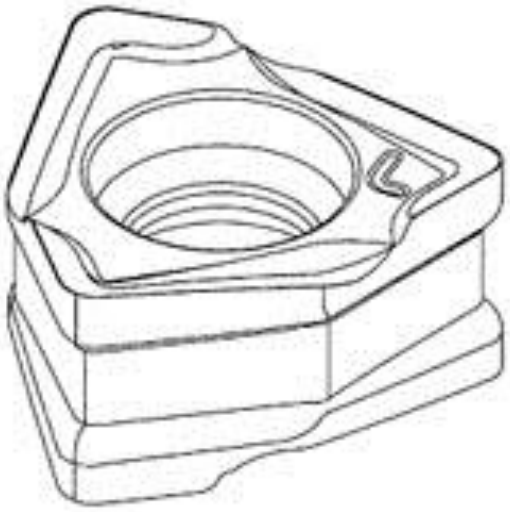

| | |
|---|---|
| **DESIGN NUMBER** | 269489 |
| **CLASS** | 07-01 |

**1)GUROK TURIZM VE MADENCILIK ANONIM SIRKETI ESKISHEIR YOLU 5. KM MERKEZ, KUTAHYA, TURKEY.**
A COMPANY INCORPORATED UNDER THE LAW OF TURKEY, OF THE ABOVE ADDRESS

| | |
|---|---|
| **DATE OF REGISTRATION** | 11/02/2015 |
| **TITLE** | GLASS |

**PRIORITY NA**

| | |
|---|---|
| **DESIGN NUMBER** | 269295 |
| **CLASS** | 26-06 |

**1)TRACTORS AND FARM EQUIPMENT LIMITED, COMPANY INCORPORATED UNDER THE COMPANIES ACT, 1956, HAVING ITS REGISTERED OFFICE AT**
NO. 861, ANNASALAI, CHENNAI-600002, TAMIL NADU, INDIA

| | |
|---|---|
| **DATE OF REGISTRATION** | 04/02/2015 |
| **TITLE** | FRONT COMBINATION LAMP FOR AUTOMOBILE |

**PRIORITY NA**

| | |
|---|---|
| **DESIGN NUMBER** | 267443 |
| **CLASS** | 02-02 |

**1)NATIONAL DRESS MANUFACTURING COMPANY; AN INDIAN COMPANY, HAVING ITS REGISTERED OFFICE AT**
306, PREMSONS INDUSTRIAL ESTATE, TAHIRA COMPOUND, GUFA ROAD, JOGESHWARI (E), MUMBAI-400 060, INDIA

| | |
|---|---|
| **DATE OF REGISTRATION** | 17/11/2014 |
| **TITLE** | RAINWEAR |

**PRIORITY NA**

| | |
|---|---|
| **DESIGN NUMBER** | 266740 |
| **CLASS** | 15-09 |

**1)SINTOKOGIO, LTD., A JAPANESE COMPANY OF**
11-11, NISHIKI 1-CHOME, NAKA-KU, NAGOYA-SHI, AICHI 4600003, JAPAN

| | |
|---|---|
| **DATE OF REGISTRATION** | 16/10/2014 |
| **TITLE** | SANDBLAST APPARATUS |

**PRIORITY**

| PRIORITY NUMBER | DATE | COUNTRY |
|---|---|---|
| 2014-009399 | 29/04/2014 | JAPAN |

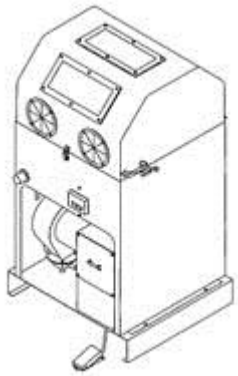

| | |
|---|---|
| **DESIGN NUMBER** | 268446 |
| **CLASS** | 21-02 |

**1)DECATHLON,**
4, BOULEVARD DE MONS, 59650 VILLENEUVE D'ASCQ, FRANCE, A COMPANY OF FRANCE

| | |
|---|---|
| **DATE OF REGISTRATION** | 26/12/2014 |
| **TITLE** | TRANSPORTABLE SWIMMING POOL |

**PRIORITY**

| PRIORITY NUMBER | DATE | COUNTRY |
|---|---|---|
| 001426027-0001 | 09/10/2014 | OHIM |

| | |
|---|---|
| **DESIGN NUMBER** | 267312 |
| **CLASS** | 08-03 |

**1)SUMITOMO ELECTRIC HARDMETAL CORP., A CORPORATION ORGANIZED AND EXISTING UNDER THE LAWS OF JAPAN, OF THE ADDRESS**
1-1, KOYAKITA 1-CHOME, ITAMI-SHI, HYOGO, JAPAN

| | |
|---|---|
| **DATE OF REGISTRATION** | 11/11/2014 |
| **TITLE** | CUTTING TOOL |

**PRIORITY**

| PRIORITY NUMBER | DATE | COUNTRY |
|---|---|---|
| 2014-010113 | 12/05/2014 | JAPAN |

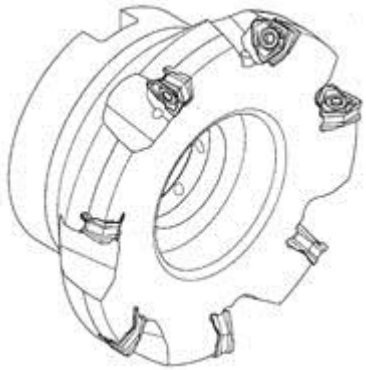

| | |
|---|---|
| **DESIGN NUMBER** | 267445 |
| **CLASS** | 02-02 |

**1)NATIONAL DRESS MANUFACTURING COMPANY; AN INDIAN COMPANY, HAVING ITS REGISTERED OFFICE AT**
306, PREMSONS INDUSTRIAL ESTATE, TAHIRA COMPOUND, GUFA ROAD, JOGESHWARI (E), MUMBAI-400 060, INDIA

| | |
|---|---|
| **DATE OF REGISTRATION** | 17/11/2014 |
| **TITLE** | RAINWEAR |

**PRIORITY NA**

| | |
|---|---|
| **DESIGN NUMBER** | 262170 |
| **CLASS** | 03-01 |

**1)SAFARI INDUSTRIES (INDIA) LIMITED (THE ‘‘APPLICANT’’ • ) HAVING ADDRESS AT**
803(II) A WING, THE QUBE, M. V. ROAD, BEHIND TAJ FLIGHT KITCHEN, ANDHERI (E), MUMBAI, INDIA

| | |
|---|---|
| **DATE OF REGISTRATION** | 30/04/2014 |
| **TITLE** | LUGGAGE |

**PRIORITY NA**

| | |
|---|---|
| **DESIGN NUMBER** | 257872 |
| **CLASS** | 07-02 |
| **1)STOVEKRAFT PRIVATE LIMITED,** AT NO. 81/1, MEDAMARANAHALLI, HAROHALLI HOBLI, KANAKPURA TALUK, RAMANAGARA DISTRICT-562 112, KARNATAKA STATE, INDIA | |
| **DATE OF REGISTRATION** | 30/10/2013 |
| **TITLE** | PRESSURE COOKER |
| **PRIORITY NA** | |

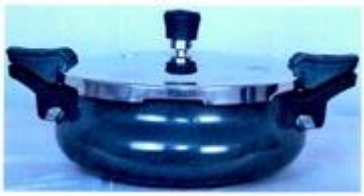

| | |
|---|---|
| **DESIGN NUMBER** | 266094 |
| **CLASS** | 06-03 |
| **1)A3NP INDÚSTRIA E COMÉRCIO DE MÓVEIS S/A, A BRAZILIAN COMPANY OF** RUA IGUATEMI, 192, CONJUNTO 174 B, ITAIM BIBI, SÃO PAULO-SP, ZIP CODE: 01451-010 BRAZIL | |
| **DATE OF REGISTRATION** | 29/09/2014 |
| **TITLE** | TABLE |
| **PRIORITY** | |

| PRIORITY NUMBER | DATE | COUNTRY |
|---|---|---|
| BR302014003008-6 | 25/06/2014 | BRAZIL |



| | |
|---|---|
| **DESIGN NUMBER** | 266578 |
| **CLASS** | 06-07 |
| **1)M/S ARCHIE AND JUGHEAD INDIA PVT LTD. HAVING OFFICE AT** B-144, MAYAPURI INDUSTRIAL AREA, PHASE-1, NEW DELHI-110064, INDIA, AN INDIAN. | |
| **DATE OF REGISTRATION** | 09/10/2014 |
| **TITLE** | PHOTO FRAME |
| **PRIORITY NA** | |

| | |
|---|---|
| **DESIGN NUMBER** | 266682 |
| **CLASS** | 09-01 |
| **1)MAHOU, S.A., C/TITÁN,** 15, 28045 MADRID, SPAIN, NATIONALITY-SPAIN | |
| **DATE OF REGISTRATION** | 13/10/2014 |
| **TITLE** | BOTTLE |
| **PRIORITY NA** | |

| | |
|---|---|
| **DESIGN NUMBER** | 267112 |
| **CLASS** | 05-06 |
| **1)LG HAUSYS, LTD., A KOREAN CORPORATION,** ONE IFC BUILDING, 10 GUKJEGEUMYUNG-RO, YEONGDEUNGPO-GU, SEOUL, REPUBLIC OF KOREA | |
| **DATE OF REGISTRATION** | 30/10/2014 |
| **TITLE** | RESIN PAPER USED FOR DECORATIVE SHEETS |

**PRIORITY**

| PRIORITY NUMBER | DATE | COUNTRY |
|---|---|---|
| KR 30-2014-0040340 | 19/08/2014 | REPUBLIC OF KOREA |

| | |
|---|---|
| **DESIGN NUMBER** | 269614 |
| **CLASS** | 14-03 |
| **1)PANASONIC INTELLECTUAL PROPERTY MANAGEMENT CO., LTD., A JAPANESE COMPANY OF** 1-61, SHIROMI 2-CHOME, CHOU-KU, OSAKA-SHI, OSAKA 540-6207, JAPAN | |
| **DATE OF REGISTRATION** | 13/02/2015 |
| **TITLE** | INTERCOM |
| **PRIORITY NA** | |

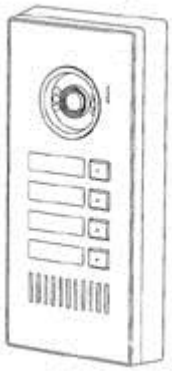

| | |
|---|---|
| **DESIGN NUMBER** | 269367 |
| **CLASS** | 08-06 |
| **1)DEEPAK KUMAR GELADA, PROPRIETOR OF : M/S. VISHAL AGENCIES, CARRYING ON BUSINESS AT** NO. 26, DEVARAJ MUDALI STREET, IIND FLOOR, PARK TOWN CHENNAI-600 003 INDIA | |
| **DATE OF REGISTRATION** | 06/02/2015 |
| **TITLE** | DOOR HANDLE |
| **PRIORITY NA** | |

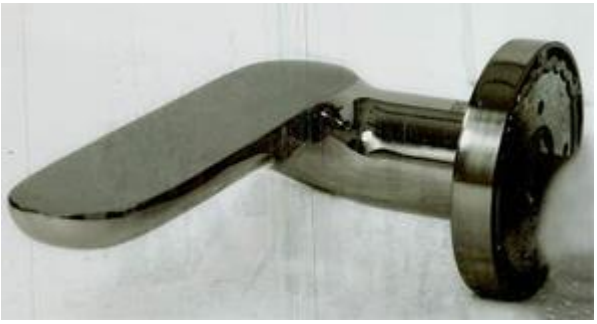

| | |
|---|---|
| **DESIGN NUMBER** | 199801 |
| **CLASS** | 28-02 |
| **1)ITC LIMITED, AN INDIAN COMPANY,** OF VIRGINIA HOUSE, 37, J.L. NEHRU ROAD, KOLKATA-700071, STATE OF WEST BENGAL, INDIA | |
| **DATE OF REGISTRATION** | 10/06/2005 |
| **TITLE** | SOAP |
| **PRIORITY NA** | |

| | |
|---|---|
| **DESIGN NUMBER** | 268148 |
| **CLASS** | 15-06 |
| **1)CHOON'S DESIGN INC., A COMPANY OF THE STATE OF MICHIGAN, OF** 48813 WEST ROAD, WIXOM, MI 48393, USA | |
| **DATE OF REGISTRATION** | 12/12/2014 |
| **TITLE** | HAND LOOM |

**PRIORITY**

| PRIORITY NUMBER | DATE | COUNTRY |
|---|---|---|
| 29/494,179 | 18/06/2014 | U.S.A. |

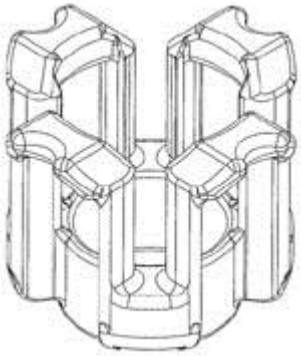

| | |
|---|---|
| **DESIGN NUMBER** | 266103 |
| **CLASS** | 06-01 |

**1)A3NP INDÚSTRIA E COMÉRCIO DE MÓVEIS S/A, A BRAZILIAN COMPANY OF**
RUA IGUATEMI, 192, CONJUNTO 174 B, ITAIM BIBI, SÃO PAULO-SP, ZIP CODE: 01451-010 BRAZIL

| | |
|---|---|
| **DATE OF REGISTRATION** | 29/09/2014 |
| **TITLE** | CHAIR |

**PRIORITY**

| PRIORITY NUMBER | DATE | COUNTRY |
|---|---|---|
| BR302014001516-8 | 04/04/2014 | BRAZIL |

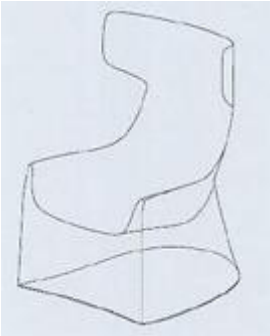

| | |
|---|---|
| **DESIGN NUMBER** | 267779 |
| **CLASS** | 31-00 |

**1)PREETHI KITCHEN APPLIANCES PRIVATE LIMITED, AN INDIAN COMPANY INCORPORATED UNDER THE PROVISIONS OF THE COMPANIES ACT, 1956, OF**
TECHNOPOLIS KNOWLEDGE PARK, MAHAKALI CAVES ROAD, CHAKALA, ANDHERI-EAST, MUMBAI-400093, INDIA

| | |
|---|---|
| **DATE OF REGISTRATION** | 27/11/2014 |
| **TITLE** | JAR OF A MIXER GRINDER |

**PRIORITY NA**

| | |
|---|---|
| **DESIGN NUMBER** | 269622 |
| **CLASS** | 14-03 |

**1)LG ELECTRONICS INC.**
128, YEOUI-DAERO, YEONGDEUNGPO - GU, SEOUL 150 - 721, REPUBLIC OF KOREA A CORPORATION INCORPORATED UNDER THE LAWS OF THE REPUBLIC OF KOREA

| | |
|---|---|
| **DATE OF REGISTRATION** | 13/02/2015 |
| **TITLE** | MOBILE PHONE |

**PRIORITY**

| PRIORITY NUMBER | DATE | COUNTRY |
|---|---|---|
| 30-2014-0040300 | 19/08/2014 | REPUBLIC OF KOREA |

| | |
|---|---|
| **DESIGN NUMBER** | 267422 |
| **CLASS** | 12-16 |
| **1)C & C PRODUCTS, 152-A/3, DHAKA VILLAGE, G.T.B. NAGAR, DELHI-110009 INDIA**<br>(AN INDIAN PROPRIETORSHIP FIRM WHOSE PROPRIETOR IS:- SH. DINESH CHAUHAN AN INDIAN NATIONAL OF THE ABOVE ADDRESS | |
| **DATE OF REGISTRATION** | 14/11/2014 |
| **TITLE** | SIDE MIRROR FOR MOTOR VEHICLES |
| **PRIORITY NA** | |

| | |
|---|---|
| **DESIGN NUMBER** | 269381 |
| **CLASS** | 26-02 |
| **1)EVEREADY INDUSTRIES INDIA LTD.**<br>1, MIDDLETON STREET, KOLKATA-700071, WEST BENGAL, INDIA, AN INDIAN COMPANY | |
| **DATE OF REGISTRATION** | 06/02/2015 |
| **TITLE** | TORCH |
| **PRIORITY NA** | |

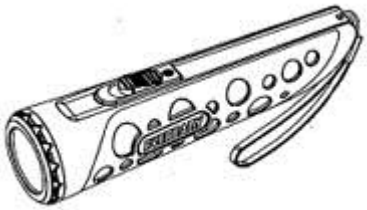

| | |
|---|---|
| **DESIGN NUMBER** | 267697 |
| **CLASS** | 15-06 |
| **1)PICANOL N.V. OF**<br>STEVERLYNCKLAAN 15, B-8900 IEPER BELGIUM, BELGIUN COMPANY | |
| **DATE OF REGISTRATION** | 26/11/2014 |
| **TITLE** | WEAVING MACHINERY |

**PRIORITY**

| PRIORITY NUMBER | DATE | COUNTRY |
|---|---|---|
| 002485540 | 18/06/2014 | OHIM |

| | |
|---|---|
| **DESIGN NUMBER** | 264638 |
| **CLASS** | 12-11 |
| **1)LML LTD., HAVING ADDRESS AT** C-10, PANKI INDUSTRIAL ESTATE, KANPUR-208022, U.P., INDIA, AN INDIAN COMPANY | |
| **DATE OF REGISTRATION** | 11/08/2014 |
| **TITLE** | TWO WHEELER VEHICLE SEAT SET |
| **PRIORITY NA** | |

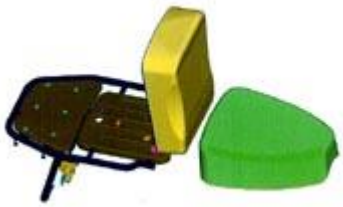

| | |
|---|---|
| **DESIGN NUMBER** | 266096 |
| **CLASS** | 06-03 |
| **1)A3NP INDÚSTRIA E COMÉRCIO DE MÓVEIS S/A, A BRAZILIAN COMPANY OF** RUA IGUATEMI, 192, CONJUNTO 174 B, ITAIM BIBI, SÃO PAULO-SP, ZIP CODE: 01451-010 BRAZIL | |
| **DATE OF REGISTRATION** | 29/09/2014 |
| **TITLE** | TABLE |

**PRIORITY**

| PRIORITY NUMBER | DATE | COUNTRY |
|---|---|---|
| BR302014001499-4 | 04/04/2014 | BRAZIL |

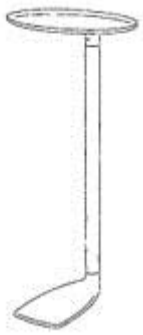

| | |
|---|---|
| **DESIGN NUMBER** | 266585 |
| **CLASS** | 08-07 |
| **1)(1)RUPESHBHAI MANSUKHBHAI MANSARA (2) JAYESHBHAI GOBARBHAI SHEKHLIYA (3) CHETANBHAI LAVJIBHAI SINGHALA (ALL THE PARTNERS ARE ADULT AND INDIAN NATIONALS) PARTNERS OF JAY SOMNATH METAL (INDIAN PARTNERSHIP FIRM)** HAVING PLACE OF BUSINESS AT-3, MARUTI INDUSTRIAL AREA, KOTHARIA RING ROAD, B/S. MURLIDHAR WAYBRIDGE, N H NO. 8 B, RAJKOT-360 003-GUJARAT,- (INDIA) | |
| **DATE OF REGISTRATION** | 10/10/2014 |
| **TITLE** | DOOR LATCH |
| **PRIORITY NA** | |

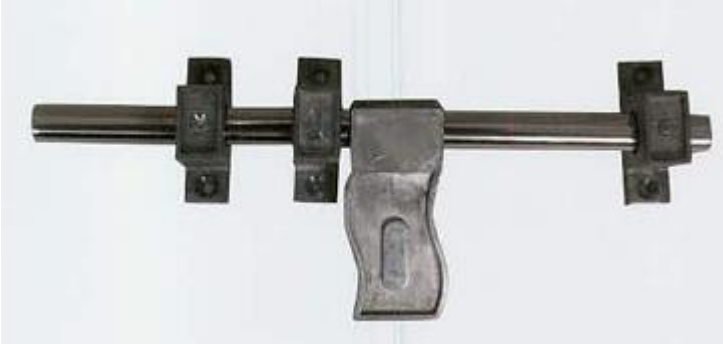

| | |
|---|---|
| **DESIGN NUMBER** | 266688 |
| **CLASS** | 12-16 |
| **1)SREENIDHI INSTITUTE OF SCIENCE & TECHNOLOGY, AN INDIAN INSTITUTE HAVING ITS ADDRESS AT YAMNAMPET, GHATKESAR, TELANGANA 501 301, INDIA AND RUDRA SANDEEP, AN INDIAN NATIONAL HAVING ADDRESS AT** H. NO. 11-193 KRANTHI NAGAR, ALER TOWN, 508 101, NALGONDA DISTRICT, TELANGANA, INDIA | |
| **DATE OF REGISTRATION** | 13/10/2014 |
| **TITLE** | WHEEL FOR VEHICLE |
| **PRIORITY NA** | |

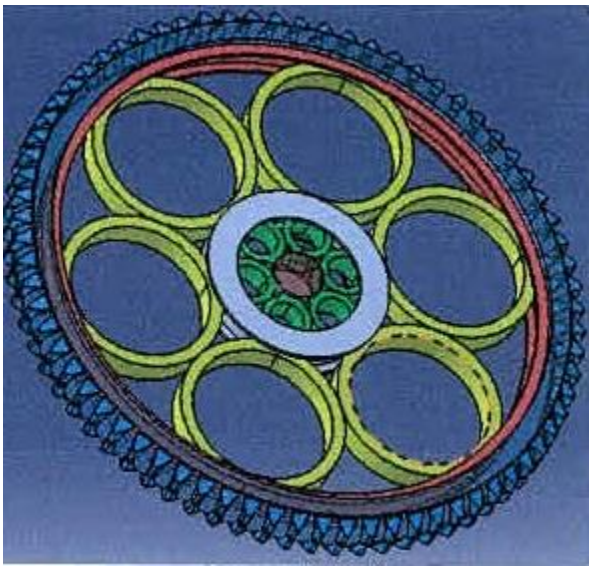

| | |
|---|---|
| **DESIGN NUMBER** | 269616 |
| **CLASS** | 02-04 |
| **1)SHREE AMBEY FOOTCARE PVT. LTD., T-1/127, PHASE-1, MANGOLPURI INDUSTRIAL AREA, DELHI-110083, INDIA** (AN INDIAN COMPANY DULY REGISTERED UNDER THE COMPANIES ACT, 1956) | |
| **DATE OF REGISTRATION** | 13/02/2015 |
| **TITLE** | SHOE |
| **PRIORITY NA** | |

| | |
|---|---|
| **DESIGN NUMBER** | 199805 |
| **CLASS** | 28-02 |
| **1)ITC LIMITED, AN INDIAN COMPANY,** OF VIRGINIA HOUSE, 37, J.L. NEHRU ROAD, KOLKATA-700071, STATE OF WEST BENGAL, INDIA | |
| **DATE OF REGISTRATION** | 10/06/2005 |
| **TITLE** | SOAP |
| **PRIORITY NA** | |

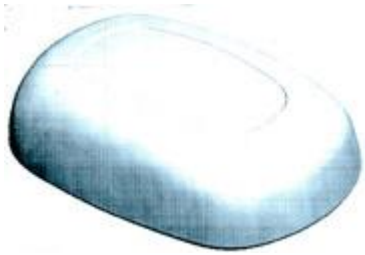

| | |
|---|---|
| **DESIGN NUMBER** | 266089 |
| **CLASS** | 06-03 |
| **1)A3NP INDÚSTRIA E COMÉRCIO DE MÓVEIS S/A, A BRAZILIAN COMPANY OF** RUA IGUATEMI, 192, CONJUNTO 174 B, ITAIM BIBI, SÃO PAULO-SP, ZIP CODE: 01451-010 BRAZIL | |
| **DATE OF REGISTRATION** | 29/09/2014 |
| **TITLE** | TABLE WITH WHEELS |

**PRIORITY**

| PRIORITY NUMBER | DATE | COUNTRY |
|---|---|---|
| BR302014001498-6 | 04/04/2014 | BRAZIL |

| | |
|---|---|
| **DESIGN NUMBER** | 266428 |
| **CLASS** | 08-08 |
| **1)GODREJ & BOYCE MFG.CO.LTD., COMPANY REGISTERED UNDER THE LAWS OF INDIA** HAVING ITS PLACE OF BUSINESS AT NO. 1, SIDCO INDUSTRIAL ESTATE, AMBATTUR, CHENNAI-600098, INDIA | |
| **DATE OF REGISTRATION** | 07/10/2014 |
| **TITLE** | SUPPORT BRACKET FOR PALLET RAIL |
| **PRIORITY NA** | |

| | |
|---|---|
| **DESIGN NUMBER** | 266573 |
| **CLASS** | 06-07 |
| **1)M/S ARCHIE AND JUGHEAD INDIA PVT LTD. HAVING OFFICE AT** B-144, MAYAPURI INDUSTRIAL AREA, PHASE-1, NEW DELHI-110064, INDIA, AN INDIAN. | |
| **DATE OF REGISTRATION** | 09/10/2014 |
| **TITLE** | PHOTO FRAME |
| **PRIORITY NA** | |

| | |
|---|---|
| **DESIGN NUMBER** | 268228 |
| **CLASS** | 09-07 |

**1)RECKITT BENCKISER (BRANDS) LIMITED, A BRITISH COMPANY OF**
103-105 BATH ROAD, SLOUGH, BERKSHIRE, SL1 3UH, UNITED KINGDOM

| | |
|---|---|
| **DATE OF REGISTRATION** | 16/12/2014 |
| **TITLE** | CAP |

**PRIORITY**

| PRIORITY NUMBER | DATE | COUNTRY |
|---|---|---|
| 002495135-0001 | 03/07/2014 | OHIM |

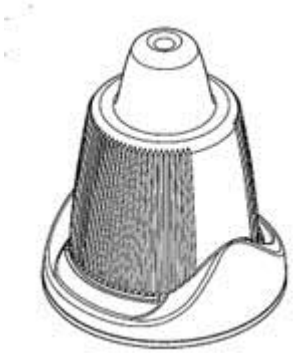

| | |
|---|---|
| **DESIGN NUMBER** | 266670 |
| **CLASS** | 06-01 |

**1)NATIONAL INSTITUTE OF DESIGN**
LOCATED AT PALDI, AHMEDABAD 380007 GUJARAT, HAVING NATIONALITY AS INDIAN

| | |
|---|---|
| **DATE OF REGISTRATION** | 10/10/2014 |
| **TITLE** | SEAT |

**PRIORITY NA**

| | |
|---|---|
| **DESIGN NUMBER** | 268472 |
| **CLASS** | 14-03 |

**1)SAMSUNG ELECTRONICS CO., LTD.**
129, SAMSUNG-RO, YEONGTONG-GU, SUWON-SI, GYEONGGI-DO, 443-742, REPUBLIC OF KOREA, A COMPANY OF REPUBLIC OF KOREA

| | |
|---|---|
| **DATE OF REGISTRATION** | 29/12/2014 |
| **TITLE** | MOBILE PHONE |

**PRIORITY**

| PRIORITY NUMBER | DATE | COUNTRY |
|---|---|---|
| 30-2014-0041229 | 25/08/2014 | REPUBLIC OF KOREA |

| | |
|---|---|
| **DESIGN NUMBER** | 269585 |
| **CLASS** | 07-02 |

**1)MR. GHISULAL RATHOD, MR. PRADEEP RATHOD, MR. PANKAJ RATHOD, MR. PANNALAL SHARMA, MR. JAYANTILAL JAIN, MRS. SANGEETA RATHOD AND MRS. BABITA RATHOD, ALL INDIAN NATIONALS TRADING UNDER THE NAME AND STYLE OF M/S. CELLO PLASTOTECH, A PARTNERSHIP FIRM REGISTERED UNDER THE PROVISION OF INDIAN PARTNERSHIP ACT, 1932, HAVING OFFICE ADDRESS AT**
CORPORATE AVENUE, 'B' WING, CELLO HOUSE, SONAWALA ROAD, GOREGAON (EAST), MUMBAI-400063, MAHARASHTRA, INDIA

| | |
|---|---|
| **DATE OF REGISTRATION** | 13/02/2015 |
| **TITLE** | CASSEROLE |

**PRIORITY NA**

| | |
|---|---|
| **DESIGN NUMBER** | 263988 |
| **CLASS** | 05-06 |

**1)VALENTINO S.P.A., A CORPORATION ORGANIZED AND EXISTING UNDER THE LAWS OF ITALY, OF**
VIA TURATI, 16/18, I-20121 MILANO, ITALY

| | |
|---|---|
| **DATE OF REGISTRATION** | 11/07/2014 |
| **TITLE** | LEATHER FABRIC |

**PRIORITY**

| PRIORITY NUMBER | DATE | COUNTRY |
|---|---|---|
| 002383802 | 13/01/2014 | OHIM |

| | |
|---|---|
| **DESIGN NUMBER** | 269356 |
| **CLASS** | 23-04 |

**1)LUMINOUS POWER TECHNOLOGIES PVT. LTD., AN INDIAN COMPANY, INCORPORATED UNDER COMPANIES ACT. WHOES ADDRESS IS**
ARO TOWER, PLOT NO.-300, 2ND FLOOR, UDYOG VIHAR, PHASE-2, GURGAON-122016, HARYANA (INDIA)

| | |
|---|---|
| **DATE OF REGISTRATION** | 06/02/2015 |
| **TITLE** | CEILING FAN |

**PRIORITY NA**

| | |
|---|---|
| **DESIGN NUMBER** | 266595 |
| **CLASS** | 08-07 |
| **1)(1)RUPESHBHAI MANSUKHBHAI MANSARA (2) JAYESHBHAI GOBARBHAI SHEKHLIYA (3) CHETANBHAI LAVJIBHAI SINGHALA (ALL THE PARTNERS ARE ADULT AND INDIAN NATIONALS) PARTNERS OF JAY SOMNATH METAL (INDIAN PARTNERSHIP FIRM)** HAVING PLACE OF BUSINESS AT-3, MARUTI INDUSTRIAL AREA, KOTHARIA RING ROAD, B/S. MURLIDHAR WAYBRIDGE, N H NO. 8 B, RAJKOT-360 003-GUJARAT,- (INDIA) | |
| **DATE OF REGISTRATION** | 10/10/2014 |
| **TITLE** | DOOR LATCH SET |
| **PRIORITY NA** | |

| | |
|---|---|
| **DESIGN NUMBER** | 267437 |
| **CLASS** | 02-02 |
| **1)NATIONAL DRESS MANUFACTURING COMPANY; AN INDIAN COMPANY, HAVING ITS REGISTERED OFFICE AT** 306, PREMSONS INDUSTRIAL ESTATE, TAHIRA COMPOUND, GUFA ROAD, JOGESHWARI (E), MUMBAI-400 060, INDIA | |
| **DATE OF REGISTRATION** | 17/11/2014 |
| **TITLE** | RAINWEAR |
| **PRIORITY NA** | |

| | |
|---|---|
| **DESIGN NUMBER** | 266596 |
| **CLASS** | 08-07 |
| **1)(1) RUPESHBHAI MANSUKHBHAI MANSARA (2) JAYESHBHAI GOBARBHAI SHEKHLIYA (3) CHETANBHAI LAVJIBHAI SINGHALA (ALL THE PARTNERS ARE ADULT AND INDIAN NATIONALS) PARTNERS OF JAY SOMNATH METAL (INDIAN PARTNERSHIP FIRM)** HAVING PLACE OF BUSINESS AT-3, MARUTI INDUSTRIAL AREA, KOTHARIA RING ROAD, B/S. MURLIDHAR WAYBRIDGE, N H NO. 8 B, RAJKOT-360003-GUJARAT,- (INDIA) | |
| **DATE OF REGISTRATION** | 10/10/2014 |
| **TITLE** | DOOR LATCH SET |
| **PRIORITY NA** | |

| | |
|---|---|
| **DESIGN NUMBER** | 249127 |
| **CLASS** | 26-05 |

**1)FLOS S.P.A., AN ITALIAN COMPANY,**
VIA A. FAINI, 2, I-25073 BOVEZZO, BRESCIA, ITALY

| | |
|---|---|
| **DATE OF REGISTRATION** | 31/10/2012 |
| **TITLE** | FLOOR LAMP |

**PRIORITY**

| PRIORITY NUMBER | DATE | COUNTRY |
|---|---|---|
| BS2012O000025 | 14/09/2012 | ITALY |

| | |
|---|---|
| **DESIGN NUMBER** | 266148 |
| **CLASS** | 07-07 |

**1)ABHIJEET SIRIGIRI, WHOSE ADDRESS IS**
H. NO: 9-4-84/145, H. NO. 145, KAKATIYA NAGAR COLONY, NAMAL NAGAR, MEHDIPATNAM, HYDERABAD-500008, TELANGANA, INDIA, WHOSE NATIONALITY IS INDIAN

| | |
|---|---|
| **DATE OF REGISTRATION** | 29/09/2014 |
| **TITLE** | BUCKET |

**PRIORITY NA**

| | |
|---|---|
| **DESIGN NUMBER** | 268182 |
| **CLASS** | 09-03 |

**1)SELVEL INDUSTRIES., INDIAN NATIONAL, 3, 1ST FLOOR, VAKIL INDUSTRIAL ESTATE, WALBHAT ROAD, GOREGAON (EAST), MUMBAI-400063, STATE OF MAHARASHTRA, (INDIA),**
AN INDIAN NATIONAL, WHOSE PARTNERS ARE 1. PRATEEK CHAMPALAL JAIN 2. VIPOOL CHAMPALAL JAIN INDIAN NATIONALS., OF ABOVE ADDRESS

| | |
|---|---|
| **DATE OF REGISTRATION** | 15/12/2014 |
| **TITLE** | CONTAINER |

**PRIORITY NA**

| | |
|---|---|
| **DESIGN NUMBER** | 266714 |
| **CLASS** | 12-05 |
| **1)KONECRANES PLC, A COMPANY ORGANIZED AND EXISTING UNDER THE LAWS OF FINLAND, OF THE ADDRESS** KONEENKATU 8, 05830 HYVINKÄÄ, FINLAND | |
| **DATE OF REGISTRATION** | 15/10/2014 |
| **TITLE** | WIRE ROPE HOIST |

**PRIORITY**

| PRIORITY NUMBER | DATE | COUNTRY |
|---|---|---|
| 002527549-0001 | 29/08/2014 | OHIM |

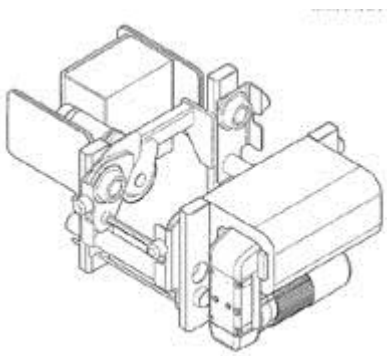

| | |
|---|---|
| **DESIGN NUMBER** | 267792 |
| **CLASS** | 12-16 |
| **1)HONDA MOTOR CO., LTD., A JAPANESE CORPORATION, OF** 1-1, MINAMI-AOYAMA 2-CHOME, MINATO-KU, TOKYO, 107-8556 JAPAN | |
| **DATE OF REGISTRATION** | 28/11/2014 |
| **TITLE** | FRONT SIDE COWL FOR MOTORCYLE |

**PRIORITY**

| PRIORITY NUMBER | DATE | COUNTRY |
|---|---|---|
| 2014-011854 | 02/06/2014 | JAPAN |

| | |
|---|---|
| **DESIGN NUMBER** | 268125 |
| **CLASS** | 15-01 |
| **1)TRIVENI TURBINE LIMITED, AN INDIAN COMPANY HAVING ITS PLACE OF BUSINESS AT** 12A, PEENYA INDUSTRIAL AREA, BANGLORE-560058 | |
| **DATE OF REGISTRATION** | 11/12/2014 |
| **TITLE** | STEAM CASING OF A STEAM TURBINE |

**PRIORITY NA**

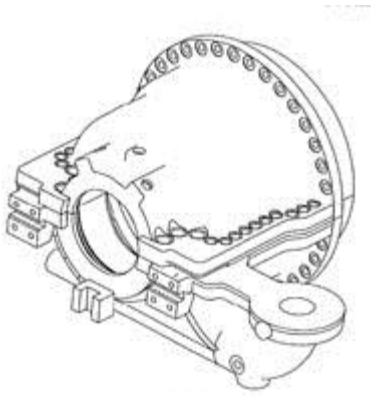

| | |
|---|---|
| **DESIGN NUMBER** | 266090 |
| **CLASS** | 06-03 |

**1)A3NP INDÚSTRIA E COMÉRCIO DE MÓVEIS S/A, A BRAZILIAN COMPANY OF**
RUA IGUATEMI, 192, CONJUNTO 174 B, ITAIM BIBI, SÃO PAULO-SP, ZIP CODE: 01451-010 BRAZIL

| | |
|---|---|
| **DATE OF REGISTRATION** | 29/09/2014 |
| **TITLE** | TABLE |

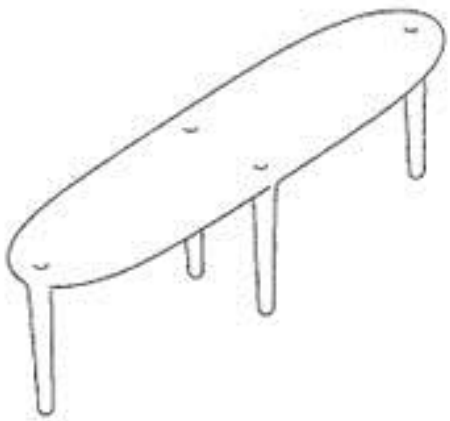

**PRIORITY**

| PRIORITY NUMBER | DATE | COUNTRY |
|---|---|---|
| BR302014001504-4 | 04/04/2014 | BRAZIL |

| | |
|---|---|
| **DESIGN NUMBER** | 266577 |
| **CLASS** | 06-07 |

**1)M/S ARCHIE AND JUGHEAD INDIA PVT LTD. HAVING OFFICE AT**
B-144, MAYAPURI INDUSTRIAL AREA, PHASE-1, NEW DELHI-110064, INDIA, AN INDIAN.

| | |
|---|---|
| **DATE OF REGISTRATION** | 09/10/2014 |
| **TITLE** | PHOTO FRAME |

**PRIORITY NA**

| | |
|---|---|
| **DESIGN NUMBER** | 266933 |
| **CLASS** | 13-03 |

**1)JAPAN AVIATION ELECTRONICS INDUSTRY, LIMITED, A JAPANESE CORPORATION, OF**
21-2, DOGENZAKA 1-CHOME, SHIBUYA-KU, TOKYO 150-0043 JAPAN

| | |
|---|---|
| **DATE OF REGISTRATION** | 28/10/2014 |
| **TITLE** | OPTICAL TRANSMISSION MODULE |

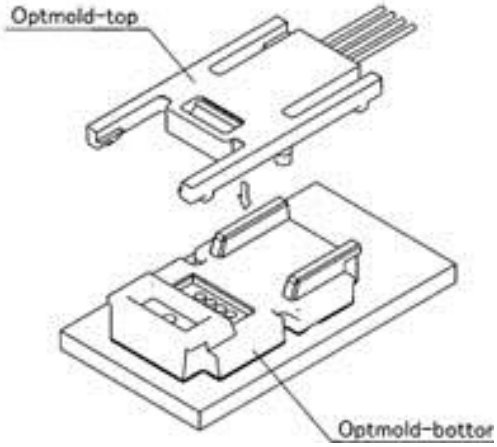


**PRIORITY**

| PRIORITY NUMBER | DATE | COUNTRY |
|---|---|---|
| 2014-009838 | 08/05/2014 | JAPAN |

| | |
|---|---|
| **DESIGN NUMBER** | 267769 |
| **CLASS** | 26-02 |
| **1)RAL CONSUMER PRODUCTS LTD. OF**<br>B-7/2, OKHLA INDUSTRIAL AREA, PHASE-2, NEW DELHI-110020, INDIA, AN INDIAN COMPANY | |
| **DATE OF REGISTRATION** | 27/11/2014 |
| **TITLE** | SOLAR LIGHT |
| **PRIORITY NA** | |

| | |
|---|---|
| **DESIGN NUMBER** | 269586 |
| **CLASS** | 07-02 |
| **1)MR. GHISULAL RATHOD, MR. PRADEEP RATHOD, MR. PANKAJ RATHOD, MR. PANNALAL SHARMA, MR. JAYANTILAL JAIN, MRS. SANGEETA RATHOD AND MRS. BABITA RATHOD, ALL INDIAN NATIONALS TRADING UNDER THE NAME AND STYLE OF M/S. CELLO PLASTOTECH, A PARTNERSHIP FIRM REGISTERED UNDER THE PROVISION OF INDIAN PARTNERSHIP ACT, 1932, HAVING OFFICE ADDRESS AT**<br>CORPORATE AVENUE, 'B' WING, CELLO HOUSE, SONAWALA ROAD, GOREGAON (EAST), MUMBAI-400 063, MAHARASHTRA, INDIA | |
| **DATE OF REGISTRATION** | 13/02/2015 |
| **TITLE** | CASSEROLE |
| **PRIORITY NA** | |

| | |
|---|---|
| **DESIGN NUMBER** | 269362 |
| **CLASS** | 13-03 |
| **1)LIGHT & SHADE ELECTRICALS PVT. LTD., ''LUTHRIA HOUSE'' •, GALA NO. 1, 11, 14 SATIVALI MAIN ROAD, SATIVALI, VASAI (E), DIST: THANE, STATE OF MAHARASHTRA INDIA, /**<br>A PRIVATE LIMITED COMPANY INCORPORATED UNDER INDIAN COMPANIES ACT, ABOVE ADDRESS | |
| **DATE OF REGISTRATION** | 06/02/2015 |
| **TITLE** | ELECTRICAL SWITCH |
| **PRIORITY NA** | |

| | |
|---|---|
| **DESIGN NUMBER** | 199718 |
| **CLASS** | 28-03 |

**1)JOHNSON & JOHNSON CONSUMER COMPANIES, INC,**
GRANDVIEW ROAD, SKILLMAN, NJ08558, A NEW JERSEY CORPORATION, U.S.A.,

| | |
|---|---|
| **DATE OF REGISTRATION** | 27/04/2005 |
| **TITLE** | SKIN TREATMENT ARTICLE |

**PRIORITY**

| PRIORITY NUMBER | DATE | COUNTRY |
|---|---|---|
| 29/228792 | 27/04/2005 | U.S.A. |

| | |
|---|---|
| **DESIGN NUMBER** | 264995 |
| **CLASS** | 15-05 |

**1)LG ELECTRONICS INC. OF**
20, YEOUIDO-DONG, YEONGDEUNGPO-GU, SEOUL 150- 721, REPUBLIC OF KOREA.

| | |
|---|---|
| **DATE OF REGISTRATION** | 22/08/2014 |
| **TITLE** | TOP COVER |

**PRIORITY NA**

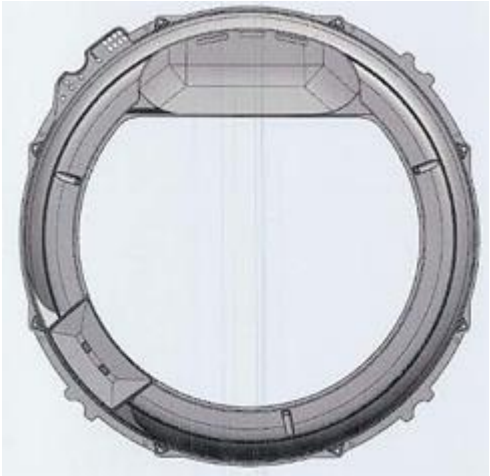

| | |
|---|---|
| **DESIGN NUMBER** | 266110 |
| **CLASS** | 06-01 |

**1)A3NP INDÚSTRIA E COMÉRCIO DE MÓVEIS S/A, A BRAZILIAN COMPANY OF**
RUA IGUATEMI, 192, CONJUNTO 174 B, ITAIM BIBI, SÃO PAULO-SP, ZIP CODE: 01451-010 BRAZIL

| | |
|---|---|
| **DATE OF REGISTRATION** | 29/09/2014 |
| **TITLE** | CHAIR |

**PRIORITY**

| PRIORITY NUMBER | DATE | COUNTRY |
|---|---|---|
| BR302014001494-3 | 04/04/2014 | BRAZIL |

| | |
|---|---|
| **DESIGN NUMBER** | 266822 |
| **CLASS** | 06-01 |

**1)STEELCASE INC., A CORPORATION INCORPORATED IN THE STATE OF MICHIGAN U.S.A., OF**
901 44TH STREET, S.E., GRAND RAPIDS, MICHIGAN 49508 USA

| | |
|---|---|
| **DATE OF REGISTRATION** | 20/10/2014 |
| **TITLE** | CHAIR |

**PRIORITY**

| PRIORITY NUMBER | DATE | COUNTRY |
|---|---|---|
| 29/493,707 | 12/06/2014 | U.S.A. |

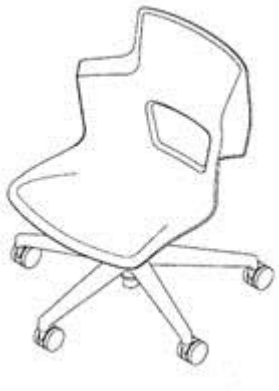

| | |
|---|---|
| **DESIGN NUMBER** | 268917 |
| **CLASS** | 14-99 |

**1)SOMFY SAS, A JOINT STOCK COMPANY ORGANIZED AND EXISTING UNDER THE LAWS OF FRANCE, OF**
50, AVENUE DU NOUVEAU MONDE, F-7 4300 CLUSES, FRANCE

| | |
|---|---|
| **DATE OF REGISTRATION** | 16/01/2015 |
| **TITLE** | HOLDER FOR REMOTE CONTROL |

**PRIORITY**

| PRIORITY NUMBER | DATE | COUNTRY |
|---|---|---|
| 841116901 | 24/09/2014 | WIPO |

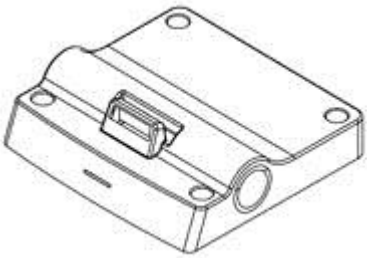

| | |
|---|---|
| **DESIGN NUMBER** | 262870 |
| **CLASS** | 02-02 |

**1)NIKE INTERNATIONAL LTD.,**
ONE BOWERMAN DRIVE, BEAVERTON, OREGON 97005-6453, UNITED STATES OF AMERICA, A CORPORATION ORGANIZED AND EXISTING UNDER THE LAWS OF BERMUDA

| | |
|---|---|
| **DATE OF REGISTRATION** | 23/05/2014 |
| **TITLE** | APPAREL |

**PRIORITY**

| PRIORITY NUMBER | DATE | COUNTRY |
|---|---|---|
| 29/473,902 | 26/11/2013 | U.S.A. |

| | |
|---|---|
| **DESIGN NUMBER** | 267228 |
| **CLASS** | 09-01 |
| **1)M/S EMAMI LIMITED, A COMPANY INCORPORATED UNDER INDIAN COMPANIES ACT, 1956 HAVING ITS REGISTERED OFFICE AT** 687, ANANDAPUR, EM BYPASS, KOLKATA-700107, INDIA BY NATIONALITY INDIAN | |
| **DATE OF REGISTRATION** | 07/11/2014 |
| **TITLE** | BOTTLE |
| **PRIORITY NA** | |

| | |
|---|---|
| **DESIGN NUMBER** | 267435 |
| **CLASS** | 02-02 |
| **1)NATIONAL DRESS MANUFACTURING COMPANY; AN INDIAN COMPANY, HAVING ITS REGISTERED OFFICE AT** 306, PREMSONS INDUSTRIAL ESTATE, TAHIRA COMPOUND, GUFA ROAD, JOGESHWARI (E), MUMBAI-400 060, INDIA | |
| **DATE OF REGISTRATION** | 17/11/2014 |
| **TITLE** | RAINWEAR |
| **PRIORITY NA** | |

| | |
|---|---|
| **DESIGN NUMBER** | 261549 |
| **CLASS** | 07-05 |
| **1)M/S MAHARAJA WHITELINE INDUSTRIAL PRIVATE LIMITED, INDIAN COMPANY,** A-25, 1ST FLOOR, REAR TOWER, MOHAN COOPERATIVE INDUSTRIAL AREA, MATHURA ROAD, NEW DELHI-110 044, DELHI, INDIA | |
| **DATE OF REGISTRATION** | 04/04/2014 |
| **TITLE** | STEAM IRON |
| **PRIORITY NA** | |

| | |
|---|---|
| **DESIGN NUMBER** | 199997 |
| **CLASS** | 19-06 |
| **1)LUXOR WRITING INSTRUMENTS (PVT.) LTD., AN INDIAN COMPANY** OF 229, OKHLA INDUSTRIAL ESTATE-III, NEW DELHI-110020, INDIA. | |
| **DATE OF REGISTRATION** | 20/06/2005 |
| **TITLE** | BALL PEN |
| **PRIORITY NA** | |

| | |
|---|---|
| **DESIGN NUMBER** | 265656 |
| **CLASS** | 24-02 |
| **1)MEDIMOP MEDICAL PROJECTS LTD., A COMPANY INCORPORATED IN ISRAEL, OF** 17 HATIDHAR STREET, P.O. BOX 2499, 43665 RA'ANANA, ISRAEL | |
| **DATE OF REGISTRATION** | 12/09/2014 |
| **TITLE** | DUAL ENDED LIQUID TRANSFER SPIKE |

**PRIORITY**

| PRIORITY NUMBER | DATE | COUNTRY |
|---|---|---|
| 55378 | 19/03/2014 | ISRAEL |

| | |
|---|---|
| **DESIGN NUMBER** | 261257 |
| **CLASS** | 08-06 |
| **1)(1) SANJAYBHAI RAVJIBHAI PATODIYA (2) ASHWINBHAI NATHABHAI SAKHIYA (3) PRAVINBHAI VALJIBHAI KAPADIYA (ALL THE PARTNERS ARE ADULT & INDIAN NATIONAL) PARTNERS OF SHIV SHAKTI METAL (INDIAN PARTNERSHIP FIRM) HAVING PLACE OF BUSINESS AT:** PARMESHWAR MAIN ROAD, OPP: JAYANT CASTING, ATIKA DHEBAR ROAD (SOUTH), RAJKOT-GUJARAT-(INDIA) | |
| **DATE OF REGISTRATION** | 27/03/2014 |
| **TITLE** | HANDLE |
| **PRIORITY NA** | |

| | |
|---|---|
| **DESIGN NUMBER** | 267315 |
| **CLASS** | 08-03 |
| **1)SUMITOMO ELECTRIC HARDMETAL CORP., A CORPORATION ORGANIZED AND EXISTING UNDER THE LAWS OF JAPAN, OF THE ADDRESS** 1-1, KOYAKITA 1-CHOME, ITAMI-SHI, HYOGO, JAPAN | |
| **DATE OF REGISTRATION** | 11/11/2014 |
| **TITLE** | CUTTING TOOL |

**PRIORITY**

| PRIORITY NUMBER | DATE | COUNTRY |
|---|---|---|
| 2014-010116 | 12/05/2014 | JAPAN |

| | |
|---|---|
| **DESIGN NUMBER** | 266597 |
| **CLASS** | 08-07 |
| **1)(1) RUPESHBHAI MANSUKHBHAI MANSARA (2) JAYESHBHAI GOBARBHAI SHEKHLIYA (3) CHETANBHAI LAVJIBHAI SINGHALA (ALL THE PARTNERS ARE ADULT AND INDIAN NATIONALS) PARTNERS OF JAY SOMNATH METAL (INDIAN PARTNERSHIP FIRM)** HAVING PLACE OF BUSINESS AT-3, MARUTI INDUSTRIAL AREA, KOTHARIA RING ROAD, B/S. MURLIDHAR WAYBRIDGE, N H NO. 8 B, RAJKOT-360003-GUJARAT,- (INDIA) | |
| **DATE OF REGISTRATION** | 10/10/2014 |
| **TITLE** | DOOR LATCH SET |
| **PRIORITY NA** | |

| | |
|---|---|
| **DESIGN NUMBER** | 267439 |
| **CLASS** | 02-02 |
| **1)NATIONAL DRESS MANUFACTURING COMPANY; AN INDIAN COMPANY, HAVING ITS REGISTERED OFFICE AT** 306, PREMSONS INDUSTRIAL ESTATE, TAHIRA COMPOUND, GUFA ROAD, JOGESHWARI (E), MUMBAI-400 060, INDIA | |
| **DATE OF REGISTRATION** | 17/11/2014 |
| **TITLE** | RAINWEAR |
| **PRIORITY NA** | |

| | |
|---|---|
| **DESIGN NUMBER** | 267790 |
| **CLASS** | 12-16 |
| **1)HONDA MOTOR CO., LTD., A JAPANESE CORPORATION, OF** 1-1, MINAMI-AOYAMA 2-CHOME, MINATO-KU, TOKYO, 107-8556 JAPAN | |
| **DATE OF REGISTRATION** | 28/11/2014 |
| **TITLE** | SIDE COVER FOR MOTORCYCLE |
| **PRIORITY** | |

| PRIORITY NUMBER | DATE | COUNTRY |
|---|---|---|
| 2014-012043 | 04/06/2014 | JAPAN |

| | |
|---|---|
| **DESIGN NUMBER** | 266949 |
| **CLASS** | 04-01 |
| **1)3M INNOVATIVE PROPERTIES COMPANY, A COMPANY INCORPORATED IN THE STATE OF DELAWARE OF** 3M CENTER, SAINT PAUL, MINNESOTA 55133-3427, U.S.A. | |
| **DATE OF REGISTRATION** | 28/10/2014 |
| **TITLE** | SCRUB SPONGE |
| **PRIORITY NA** | |

| | |
|---|---|
| **DESIGN NUMBER** | 262955 |
| **CLASS** | 09-05 |
| **1)HIMALAYA GLOBAL HOLDINGS LIMITED, A COMPANY DULY ORGANIZED AND EXISTING UNDER THE LAWS OF CAYMAN ISLANDS OF** 106 ELIZABETHAN SQUARE, PO BOX 1162, GRAND CAYMAN KY1-1102, CAYMAN ISLANDS | |
| **DATE OF REGISTRATION** | 28/05/2014 |
| **TITLE** | DISPENSING TUBE |
| **PRIORITY NA** | |

| | |
|---|---|
| **DESIGN NUMBER** | 267229 |
| **CLASS** | 09-07 |
| **1)M/S EMAMI LIMITED, A COMPANY INCORPORATED UNDER INDIAN COMPANIES ACT, 1956 HAVING ITS REGISTERED OFFICE AT** 687, ANANDAPUR, EM BYPASS, KOLKATA-700107, INDIA BY NATIONALITY INDIAN | |
| **DATE OF REGISTRATION** | 07/11/2014 |
| **TITLE** | AEROSOL DISPENSER OF BOTTLE |
| **PRIORITY NA** | |

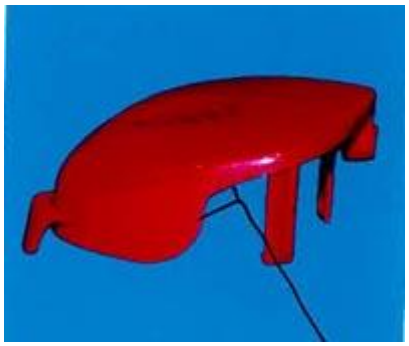

| | |
|---|---|
| **DESIGN NUMBER** | 267436 |
| **CLASS** | 02-02 |
| **1)NATIONAL DRESS MANUFACTURING COMPANY; AN INDIAN COMPANY, HAVING ITS REGISTERED OFFICE AT** 306, PREMSONS INDUSTRIAL ESTATE, TAHIRA COMPOUND, GUFA ROAD, JOGESHWARI (E), MUMBAI-400 060, INDIA | |
| **DATE OF REGISTRATION** | 17/11/2014 |
| **TITLE** | RAINWEAR |
| **PRIORITY NA** | |

| | |
|---|---|
| **DESIGN NUMBER** | 268445 |
| **CLASS** | 03-01 |
| **1)DECATHLON,** 4, BOULEVARD DE MONS, 59650 VILLENEUVE D'ASCQ, FRANCE, A COMPANY OF FRANCE | |
| **DATE OF REGISTRATION** | 26/12/2014 |
| **TITLE** | BAG |

**PRIORITY**

| PRIORITY NUMBER | DATE | COUNTRY |
|---|---|---|
| 001426027-0001 | 09/10/2014 | OHIM |

| | |
|---|---|
| **DESIGN NUMBER** | 269300 |
| **CLASS** | 15-02 |
| **1)S.V.A RIKKON LUBES PVT LTD, A COMPANY INCORPORATED UNDER THE INDIAN COMPANIES ACT AT** NO. 203, NAGESWARA RAO ROAD, 2ND EXTENSION, ATHIPET, AMBATTUR, CHENNAI-600058, INDIA, INDIAN-NATIONAL OF THE ABOVE ADDRESS | |
| **DATE OF REGISTRATION** | 04/02/2015 |
| **TITLE** | PUMPS FOR DISPENSING LUBRICANTS |
| **PRIORITY NA** | |

| | |
|---|---|
| **DESIGN NUMBER** | 267444 |
| **CLASS** | 02-02 |
| **1)NATIONAL DRESS MANUFACTURING COMPANY; AN INDIAN COMPANY, HAVING ITS REGISTERED OFFICE AT** 306, PREMSONS INDUSTRIAL ESTATE, TAHIRA COMPOUND, GUFA ROAD, JOGESHWARI (E), MUMBAI-400060, INDIA | |
| **DATE OF REGISTRATION** | 17/11/2014 |
| **TITLE** | RAINWEAR |
| **PRIORITY NA** | |

| | |
|---|---|
| **DESIGN NUMBER** | 264637 |
| **CLASS** | 12-11 |
| **1)LML LTD., HAVING ADDRESS AT** C-10, PANKI INDUSTRIAL ESTATE, KANPUR-208022, U.P., INDIA, AN INDIAN COMPANY | |
| **DATE OF REGISTRATION** | 11/08/2014 |
| **TITLE** | TWO WHEELER VEHICLE SEAT SET |
| **PRIORITY NA** | |

| | |
|---|---|
| **DESIGN NUMBER** | 266362 |
| **CLASS** | 12-16 |
| **1)IBIDEN CO., LTD., A JAPANESE COMPANY ORGANIZED AND EXISTING UNDER THE LAWS OF JAPAN OF** 1, KANDACHO 2-CHOME, OGAKI-SHI, GIFU, JAPAN | |
| **DATE OF REGISTRATION** | 30/09/2014 |
| **TITLE** | HEAT INSULATING MEMBER FOR EXHAUST PIPE COMPONENT |

**PRIORITY**

| PRIORITY NUMBER | DATE | COUNTRY |
|---|---|---|
| 2014-007191 | 01/04/2014 | JAPAN |

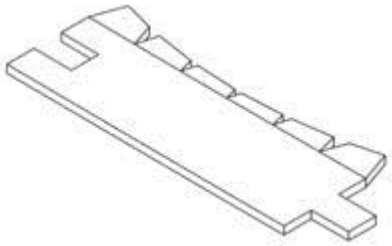

| | |
|---|---|
| **DESIGN NUMBER** | 266448 |
| **CLASS** | 06-03 |
| **1)NATIONAL INSTITUTE OF DESIGN LOCATED AT** PALDI, AHMEDABAD-380007, GUJARAT, HAVING NATIONALITY AS INDIAN | |
| **DATE OF REGISTRATION** | 08/10/2014 |
| **TITLE** | CHAIR |
| **PRIORITY NA** | |

| | |
|---|---|
| **DESIGN NUMBER** | 266579 |
| **CLASS** | 06-07 |
| **1)M/S ARCHIE AND JUGHEAD INDIA PVT LTD. HAVING OFFICE AT** B-144, MAYAPURI INDUSTRIAL AREA, PHASE-1, NEW DELHI-110064, INDIA, AN INDIAN. | |
| **DATE OF REGISTRATION** | 09/10/2014 |
| **TITLE** | PHOTO FRAME |
| **PRIORITY NA** | |

| | |
|---|---|
| **DESIGN NUMBER** | 266095 |
| **CLASS** | 06-03 |
| **1)A3NP INDÚSTRIA E COMÉRCIO DE MÓVEIS S/A, A BRAZILIAN COMPANY OF** RUA IGUATEMI, 192, CONJUNTO 174 B, ITAIM BIBI, SÃO PAULO-SP, ZIP CODE: 01451-010 BRAZIL | |
| **DATE OF REGISTRATION** | 29/09/2014 |
| **TITLE** | TABLE |

**PRIORITY**

| PRIORITY NUMBER | DATE | COUNTRY |
|---|---|---|
| BR302014001513-3 | 04/04/2014 | BRAZIL |

| | |
|---|---|
| **DESIGN NUMBER** | 266683 |
| **CLASS** | 05-06 |
| **1)AMAZON TECHNOLOGIES, INC, A COMPANY ORGANIZED AND EXISTING UNDER THE LAWS OF UNITED STATES, HAVING ITS OFFICE AT** PO BOX 8102, RENO, NEVADA 89507, UNITED STATES OF AMERICA | |
| **DATE OF REGISTRATION** | 13/10/2014 |
| **TITLE** | A MASK FOR HIDING COMPONENTS OF A A DISPLAY SCREEN OF A HAND-HELD COMPUTING DEVICE |

**PRIORITY**

| PRIORITY NUMBER | DATE | COUNTRY |
|---|---|---|
| 29/488,085 | 15/04/2014 | U.S.A. |

| | |
|---|---|
| **DESIGN NUMBER** | 267874 |
| **CLASS** | 08-08 |
| **1)ROXTEC AB, A SWEDISH JOINT STOCK COMPANY, OF** P.O. BOX 540, SE-371 23 KARLSKRONA, SWEDEN | |
| **DATE OF REGISTRATION** | 03/12/2014 |
| **TITLE** | WELDING FIXTURE |

**PRIORITY**

| PRIORITY NUMBER | DATE | COUNTRY |
|---|---|---|
| 002479691-0001 | 10/06/2014 | OHIM |

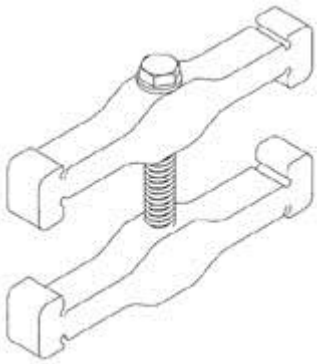

| | |
|---|---|
| **DESIGN NUMBER** | 269615 |
| **CLASS** | 08-07 |
| **1)GULMOHAR ENTERPRISES, 435, SHAHZADA BAGH, PHASE-1, INDUSTRIAL COMPLEX, DELHI-110035, INDIA.** (AN INDIAN PROPRIETORSHIP FIRM WHOSE PROPRIETOR IS:- ZIA UL HAQUE AN INDIAN NATIONAL OF THE ABOVE ADDRESS | |
| **DATE OF REGISTRATION** | 13/02/2015 |
| **TITLE** | BUCKLE |
| **PRIORITY NA** | |

| | |
|---|---|
| **DESIGN NUMBER** | 269369 |
| **CLASS** | 08-06 |
| **1)DEEPAK KUMAR GELADA, PROPRIETOR OF : M/S. VISHAL AGENCIES, CARRYING ON BUSINESS AT** NO. 26, DEVARAJ MUDALI STREET, IIND FLOOR, PARK TOWN CHENNAI-600 003 INDIA | |
| **DATE OF REGISTRATION** | 06/02/2015 |
| **TITLE** | DOOR HANDLE |
| **PRIORITY NA** | |

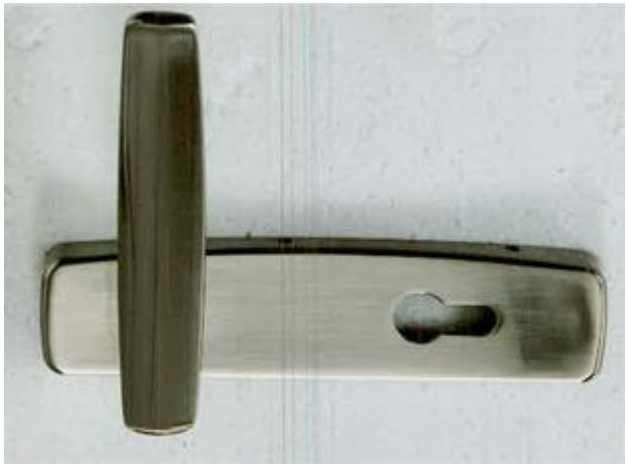

| | |
|---|---|
| **DESIGN NUMBER** | 199802 |
| **CLASS** | 28-02 |
| **1)ITC LIMITED, AN INDIAN COMPANY,** OF VIRGINIA HOUSE, 37, J.L. NEHRU ROAD, KOLKATA-700071, STATE OF WEST BENGAL, INDIA | |
| **DATE OF REGISTRATION** | 10/06/2005 |
| **TITLE** | SOAP |
| **PRIORITY NA** | |

| | |
|---|---|
| **DESIGN NUMBER** | 262441 |
| **CLASS** | 25-04 |
| **1)SF INDUSTRY PTE LTD., A CORPORATION ORGANIZED AND EXISTING UNDER THE LAWS OF SINGAPORE WHOSE ADDRESS** NO. 8, DEFU LANE 8, SINGAPORE 539313 | |
| **DATE OF REGISTRATION** | 07/05/2014 |
| **TITLE** | DOVETAIL-JOINT FOR BUILDING STRUCTURES |

**PRIORITY**

| PRIORITY NUMBER | DATE | COUNTRY |
|---|---|---|
| D2013/1403/A | 07/11/2013 | SINGAPORE |

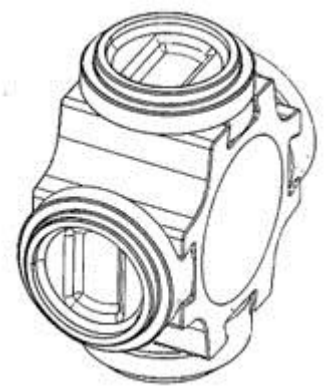

| | |
|---|---|
| **DESIGN NUMBER** | 267316 |
| **CLASS** | 08-03 |
| **1)SUMITOMO ELECTRIC HARDMETAL CORP., A CORPORATION ORGANIZED AND EXISTING UNDER THE LAWS OF JAPAN, OF THE ADDRESS** 1-1, KOYAKITA 1-CHOME, ITAMI-SHI, HYOGO, JAPAN | |
| **DATE OF REGISTRATION** | 11/11/2014 |
| **TITLE** | CUTTING TOOL |

**PRIORITY**

| PRIORITY NUMBER | DATE | COUNTRY |
|---|---|---|
| 2014-010122 | 12/05/2014 | JAPAN |

| | |
|---|---|
| **DESIGN NUMBER** | 269217 |
| **CLASS** | 22-06 |
| **1)STELSON QUADROS, INDIAN INHABITANT, HAVING HIS OFFICE AT** 301, VAIDYA VILLA, J. K. MEHTA LANE, SANTACRUZ (WEST), MUMBAI-400054, STATE OF MAHARASHTRA, INDIA, OF ABOVE ADDRESS | |
| **DATE OF REGISTRATION** | 30/01/2015 |
| **TITLE** | INSECT TRAP |
| **PRIORITY NA** | |

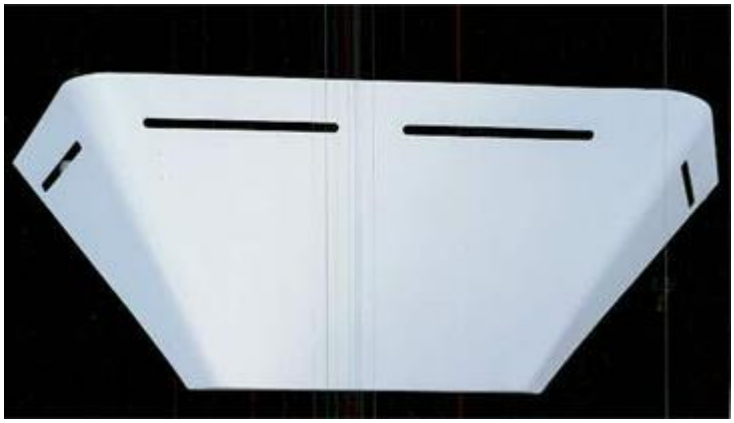

| | |
|---|---|
| **DESIGN NUMBER** | 267636 |
| **CLASS** | 06-06 |
| **1)RECLINERS INDIA PVT. LTD., (AN INDIAN COMPANY INCORPORATED UNDER THE COMPANIES ACT, 1956) HAVING ITS OFFICE AT** J-82, PARYAVARAN COMPLEX, NEB SARAI, NEW DELHI-110 068, INDIA | |
| **DATE OF REGISTRATION** | 21/11/2014 |
| **TITLE** | CONTROL PANEL FOR SOFA |
| **PRIORITY NA** | |

| | |
|---|---|
| **DESIGN NUMBER** | 263572 |
| **CLASS** | 09-01 |
| **1)DURAN GROUP GMBH, A GERMAN COMPANY, OF** OTTO-SCHOTT-STRAßE 21, 97877 WERTHEIM, GERMANY | |
| **DATE OF REGISTRATION** | 23/06/2014 |
| **TITLE** | BOTTLE |

**PRIORITY**

| PRIORITY NUMBER | DATE | COUNTRY |
|---|---|---|
| 002403808 | 13/02/2014 | OHIM |

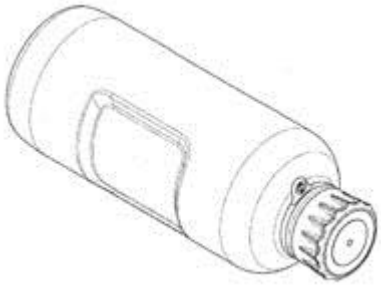

| | |
|---|---|
| **DESIGN NUMBER** | 266098 |
| **CLASS** | 06-03 |
| **1)A3NP INDÚSTRIA E COMÉRCIO DE MÓVEIS S/A, A BRAZILIAN COMPANY OF** RUA IGUATEMI, 192, CONJUNTO 174 B, ITAIM BIBI, SÃO PAULO-SP, ZIP CODE: 01451-010 BRAZIL | |
| **DATE OF REGISTRATION** | 29/09/2014 |
| **TITLE** | TABLE |

**PRIORITY**

| PRIORITY NUMBER | DATE | COUNTRY |
|---|---|---|
| BR302014001518-4 | 04/04/2014 | BRAZIL |

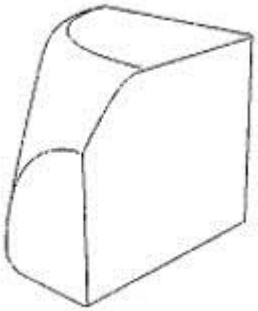

| | |
|---|---|
| **DESIGN NUMBER** | 266587 |
| **CLASS** | 08-07 |
| **1)(1) RUPESHBHAI MANSUKHBHAI MANSARA (2) JAYESHBHAI GOBARBHAI SHEKHLIYA (3) CHETANBHAI LAVJIBHAI SINGHALA (ALL THE PARTNERS ARE ADULT AND INDIAN NATIONALS) PARTNERS OF JAY SOMNATH METAL (INDIAN PARTNERSHIP FIRM)** HAVING PLACE OF BUSINESS AT-3, MARUTI INDUSTRIAL AREA, KOTHARIA RING ROAD, B/S. MURLIDHAR WAYBRIDGE, N H NO. 8 B, RAJKOT-360 003-GUJARAT,- (INDIA) | |
| **DATE OF REGISTRATION** | 10/10/2014 |
| **TITLE** | DOOR LATCH |
| **PRIORITY NA** | |

| | |
|---|---|
| **DESIGN NUMBER** | 260292 |
| **CLASS** | 25-02 |
| **1)KONE CORPORATION, A COMPANY ORGANIZED AND EXISTING UNDER THE LAWS OF FINLAND,** OF THE ADDRESS KARTANONTIE 1, 00330 HELSINKI, FINLAND | |
| **DATE OF REGISTRATION** | 12/02/2014 |
| **TITLE** | ACCESS GATE (SET) |
| **PRIORITY** | |

| PRIORITY NUMBER | DATE | COUNTRY |
|---|---|---|
| 002318030-0003 | 30/09/2013 | OHIM |

| | |
|---|---|
| **DESIGN NUMBER** | 251259 |
| **CLASS** | 19-07 |
| **1)GHULAM HASSAN SHAH,** R/O VILLAGE MAKANDPORA, P/O DANOW BOGUND 192231 TEH./DISTT. KULGAM JAMMU & KASHMIR, INDIAN | |
| **DATE OF REGISTRATION** | 29/01/2013 |
| **TITLE** | TEACHING APPARATUS (SET) |
| **PRIORITY NA** | |

| | |
|---|---|
| **DESIGN NUMBER** | 269379 |
| **CLASS** | 26-02 |
| **1)EVEREADY INDUSTRIES INDIA LTD.**<br>1, MIDDLETON STREET, KOLKATA-700071, WEST BENGAL, INDIA, AN INDIAN COMPANY | |
| **DATE OF REGISTRATION** | 06/02/2015 |
| **TITLE** | TORCH |
| **PRIORITY NA** | |

| | |
|---|---|
| **DESIGN NUMBER** | 261545 |
| **CLASS** | 31-00 |
| **1)GROUPE SEB INDIA PRIVATE LIMITED,**<br>A-25, FIRST FLOOR, MOHAN CO-OPERATIVE INDUSTRIAL AREA, NEW DELHI-110 044, DELHI, INDIA | |
| **DATE OF REGISTRATION** | 04/04/2014 |
| **TITLE** | MIXER GRINDER |
| **PRIORITY NA** | |

| | |
|---|---|
| **DESIGN NUMBER** | 264639 |
| **CLASS** | 12-16 |
| **1)TVS MOTOR COMPANY LIMITED, AN INDIAN COMPANY INCORPORATED UNDER THE COMPANIES ACT, 1956, HAVING ITS REGISTERED OFFICE AT**<br>"JAYALAKSHMI ESTATES", 29 (OLD NO. 8) HADDOWS ROAD, CHENNAI 600 006, TAMIL NADU, INDIA | |
| **DATE OF REGISTRATION** | 11/08/2014 |
| **TITLE** | SILENCER |
| **PRIORITY NA** | |

| | |
|---|---|
| **DESIGN NUMBER** | 268133 |
| **CLASS** | 04-02 |
| **1)M/S C. P. MARKETING INC., A-65, SWARN PARK INDUSTRIAL AREA, PHASE-I, MUNDKA, NANGLOI-110041,** AN INDIAN PROPRIETORSHIP FIRM, WHOSE PROPRIETOR IS RAKESH GUPTA, OF ABOVE ADDRESS, AN INDIAN NATIONAL | |
| **DATE OF REGISTRATION** | 11/12/2014 |
| **TITLE** | SHOE SHINER |
| **PRIORITY NA** | |


| | |
|---|---|
| **DESIGN NUMBER** | 266097 |
| **CLASS** | 06-03 |
| **1)A3NP INDÚSTRIA E COMÉRCIO DE MÓVEIS S/A, A BRAZILIAN COMPANY OF** RUA IGUATEMI, 192, CONJUNTO 174 B, ITAIM BIBI, SÃO PAULO-SP, ZIP CODE: 01451-010 BRAZIL | |
| **DATE OF REGISTRATION** | 29/09/2014 |
| **TITLE** | TABLE |

**PRIORITY**

| PRIORITY NUMBER | DATE | COUNTRY |
|---|---|---|
| BR302014001502-8 | 04/04/2014 | BRAZIL |

| | |
|---|---|
| **DESIGN NUMBER** | 266586 |
| **CLASS** | 08-07 |
| **1)(1)RUPESHBHAI MANSUKHBHAI MANSARA (2) JAYESHBHAI GOBARBHAI SHEKHLIYA (3) CHETANBHAI LAVJIBHAI SINGHALA (ALL THE PARTNERS ARE ADULT AND INDIAN NATIONALS) PARTNERS OF JAY SOMNATH METAL (INDIAN PARTNERSHIP FIRM)** HAVING PLACE OF BUSINESS AT-3, MARUTI INDUSTRIAL AREA, KOTHARIA RING ROAD, B/S. MURLIDHAR WAYBRIDGE, N H NO. 8 B, RAJKOT-360 003-GUJARAT,-(INDIA) | |
| **DATE OF REGISTRATION** | 10/10/2014 |
| **TITLE** | DOOR LATCH |
| **PRIORITY NA** | |

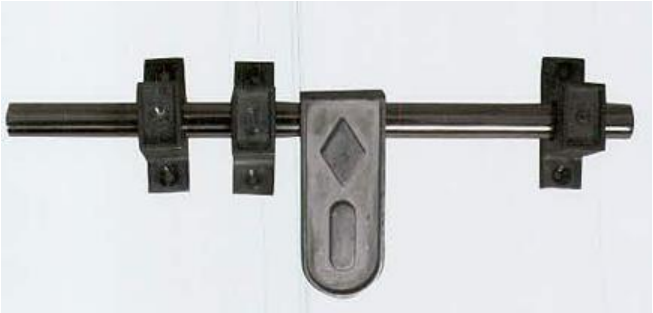

| | |
|---|---|
| **DESIGN NUMBER** | 269377 |
| **CLASS** | 12-16 |
| **1)(1) RAHUL JINDAL S/O SH. VINOD KUMAR JINDAL, OF HOUSE NUMBER 17945, STREET NO. 5A, BASANT VIHAR, BATHINDA (151001), PUNJAB, INDIA, AN INDIAN CITIZEN & (2) LALIT MOHAN S/O. SH. L. D. SHARMA, OF** SITA RAM HOUSE, RANKERS POINT COMPLEX, STREET NO. 3, BIBIWALA ROAD, BATHINDA (151001), PUNJAB, INDIA, AN INDIAN CITIZEN | |
| **DATE OF REGISTRATION** | 06/02/2015 |
| **TITLE** | STEERING WHEEL |
| **PRIORITY NA** | |

| | |
|---|---|
| **DESIGN NUMBER** | 261544 |
| **CLASS** | 31-00 |
| **1)GROUPE SEB INDIA PRIVATE LIMTED,** A-25, FIRST FLOOR, MOHAN CO-OPERATIVE INDUSTRIAL AREA, NEW DELHI-110 044, DELHI, INDIA | |
| **DATE OF REGISTRATION** | 04/04/2014 |
| **TITLE** | MIXER GRINDER |
| **PRIORITY NA** | |

| | |
|---|---|
| **DESIGN NUMBER** | 266599 |
| **CLASS** | 08-07 |
| **1)(1) RUPESHBHAI MANSUKHBHAI MANSARA (2) JAYESHBHAI GOBARBHAI SHEKHLIYA (3) CHETANBHAI LAVJIBHAI SINGHALA (ALL THE PARTNERS ARE ADULT AND INDIAN NATIONALS) PARTNERS OF JAY SOMNATH METAL (INDIAN PARTNERSHIP FIRM)** HAVING PLACE OF BUSINESS AT-3, MARUTI INDUSTRIAL AREA, KOTHARIA RING ROAD, B/S. MURLIDHAR WAYBRIDGE, N H NO. 8 B, RAJKOT-360 003-GUJARAT,- (INDIA) | |
| **DATE OF REGISTRATION** | 10/10/2014 |
| **TITLE** | DOOR LATCH SET |
| **PRIORITY NA** | |

| | |
|---|---|
| **DESIGN NUMBER** | 268185 |
| **CLASS** | 11-02 |
| **1)MALHOTRA FLOWERS, 4524, GALI JATAN, PAHARI DHIRAJ, SADAR BAZAR, DELHI-110006, INDIA.** (AN INDIAN PROPRIETORSHIP FIRM WHOSE PROPRIETOR IS:- SH. SIDHARTH MALHOTRA AN INDIAN NATIONAL OF THE ABOVE ADDRESS | |
| **DATE OF REGISTRATION** | 15/12/2014 |
| **TITLE** | FLOWER POT |
| **PRIORITY NA** | |

| | |
|---|---|
| **DESIGN NUMBER** | 268270 |
| **CLASS** | 03-01 |
| **1)LG ELECTRONICS INC.,** 128, YEOUI-DAERO, YEONGDEUNGPO - GU, SEOUL 150 - 721, KOREA; NATIONALITY: REPUBLIC OF KOREA | |
| **DATE OF REGISTRATION** | 18/12/2014 |
| **TITLE** | CASE FOR MOBILE PHONES |

**PRIORITY**

| PRIORITY NUMBER | DATE | COUNTRY |
|---|---|---|
| 30-2014-0031610 | 26/06/2014 | REPUBLIC OF KOREA |

| | |
|---|---|
| **DESIGN NUMBER** | 267806 |
| **CLASS** | 07-01 |
| **1)RAVISSANT PRIVATE LIMITED, AN INDIAN COMPANY, OF** 50-51, COMMERCIAL COMPLEX, NEW FRIENDS COLONY, NEW DELHI-110065, INDIA | |
| **DATE OF REGISTRATION** | 28/11/2014 |
| **TITLE** | BOWL |
| **PRIORITY NA** | |

| | |
|---|---|
| **DESIGN NUMBER** | 262678 |
| **CLASS** | 13-02 |
| **1)EXIDE INDUSTRIES LIMITED,** 59E, CHOWRINGHEE ROAD, KOLKATA-700 020, WEST BENGAL, INDIA, AN INDIAN COMPANY | |
| **DATE OF REGISTRATION** | 16/05/2014 |
| **TITLE** | BATTERY |
| **PRIORITY NA** | |

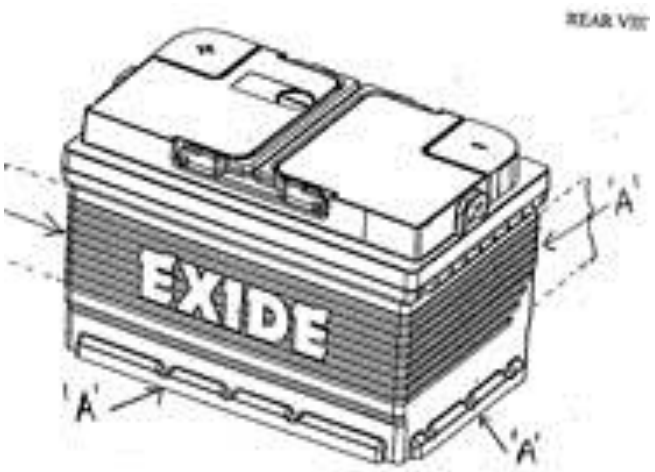


| | |
|---|---|
| **DESIGN NUMBER** | 269293 |
| **CLASS** | 12-16 |
| **1)TRACTORS AND FARM EQUIPMENT LIMITED, COMPANY INCORPORATED UNDER THE COMPANIES ACT, 1956, HAVING ITS REGISTERED OFFICE AT** NO. 861, ANNASALAI, CHENNAI-600002, TAMIL NADU, INDIA | |
| **DATE OF REGISTRATION** | 04/02/2015 |
| **TITLE** | BONNET FOR TRACTOR |
| **PRIORITY NA** | |

| | |
|---|---|
| **DESIGN NUMBER** | 267441 |
| **CLASS** | 02-02 |
| **1)NATIONAL DRESS MANUFACTURING COMPANY; AN INDIAN COMPANY, HAVING ITS REGISTERED OFFICE AT** 306, PREMSONS INDUSTRIAL ESTATE, TAHIRA COMPOUND, GUFA ROAD, JOGESHWARI (E), MUMBAI-400060, INDIA | |
| **DATE OF REGISTRATION** | 17/11/2014 |
| **TITLE** | RAINWEAR |
| **PRIORITY NA** | |

| | |
|---|---|
| **DESIGN NUMBER** | 266598 |
| **CLASS** | 08-07 |
| **1)(1) RUPESHBHAI MANSUKHBHAI MANSARA (2) JAYESHBHAI GOBARBHAI SHEKHLIYA (3) CHETANBHAI LAVJIBHAI SINGHALA (ALL THE PARTNERS ARE ADULT AND INDIAN NATIONALS) PARTNERS OF JAY SOMNATH METAL (INDIAN PARTNERSHIP FIRM)** HAVING PLACE OF BUSINESS AT-3, MARUTI INDUSTRIAL AREA, KOTHARIA RING ROAD, B/S. MURLIDHAR WAYBRIDGE, N H NO. 8 B, RAJKOT-360003-GUJARAT,- (INDIA) | |
| **DATE OF REGISTRATION** | 10/10/2014 |
| **TITLE** | DOOR LATCH SET |
| **PRIORITY NA** | |

| | |
|---|---|
| **DESIGN NUMBER** | 268184 |
| **CLASS** | 02-04 |
| **1)ROYAL SALES CORPORATION, 24/21, GALI NO. 6, LIBASPUR, SAMEYPUR INDUSTRIAL AREA, NEW DELHI-110042, INDIA** (AN INDIAN PROPRIETORSHIP FIRM WHOSE PROPRIETOR IS :-SH. ANIL DEWAN. AN INDIAN NATIONAL OF THE ABOVE ADDRESS | |
| **DATE OF REGISTRATION** | 15/12/2014 |
| **TITLE** | SHOE |
| **PRIORITY NA** | |

| | |
|---|---|
| **DESIGN NUMBER** | 267440 |
| **CLASS** | 02-02 |
| **1)NATIONAL DRESS MANUFACTURING COMPANY; AN INDIAN COMPANY, HAVING ITS REGISTERED OFFICE AT** 306, PREMSONS INDUSTRIAL ESTATE, TAHIRA COMPOUND, GUFA ROAD, JOGESHWARI (E), MUMBAI-400 060, INDIA | |
| **DATE OF REGISTRATION** | 17/11/2014 |
| **TITLE** | RAINWEAR |
| **PRIORITY NA** | |

| | |
|---|---|
| **DESIGN NUMBER** | 266100 |
| **CLASS** | 06-03 |
| **1)A3NP INDÚSTRIA E COMÉRCIO DE MÓVEIS S/A, A BRAZILIAN COMPANY OF** RUA IGUATEMI, 192, CONJUNTO 174 B, ITAIM BIBI, SÃO PAULO-SP, ZIP CODE: 01451-010 BRAZIL | |
| **DATE OF REGISTRATION** | 29/09/2014 |
| **TITLE** | TABLE |

**PRIORITY**

| PRIORITY NUMBER | DATE | COUNTRY |
|---|---|---|
| BR302014001492-7 | 04/04/2014 | BRAZIL |

| | |
|---|---|
| **DESIGN NUMBER** | 266456 |
| **CLASS** | 06-08 |
| **1)NATIONAL INSTITUTE OF DESIGN LOCATED AT** PALDI, AHMEDABAD-380007, GUJARAT, HAVING NATIONALITY AS INDIAN | |
| **DATE OF REGISTRATION** | 08/10/2014 |
| **TITLE** | CLOTHES STAND |
| **PRIORITY NA** | |

| | |
|---|---|
| **DESIGN NUMBER** | 266588 |
| **CLASS** | 08-07 |
| **1)(1) RUPESHBHAI MANSUKHBHAI MANSARA (2) JAYESHBHAI GOBARBHAI SHEKHLIYA (3) CHETANBHAI LAVJIBHAI SINGHALA (ALL THE PARTNERS ARE ADULT AND INDIAN NATIONALS) PARTNERS OF JAY SOMNATH METAL (INDIAN PARTNERSHIP FIRM)** HAVING PLACE OF BUSINESS AT-3, MARUTI INDUSTRIAL AREA, KOTHARIA RING ROAD, B/S. MURLIDHAR WAYBRIDGE, N H NO. 8 B, RAJKOT-360 003-GUJARAT,- (INDIA) | |
| **DATE OF REGISTRATION** | 10/10/2014 |
| **TITLE** | DOOR LATCH |
| **PRIORITY NA** | |

| | | |
|---|---|---|
| **DESIGN NUMBER** | 269380 |  |
| **CLASS** | 26-02 | |
| **1)EVEREADY INDUSTRIES INDIA LTD.**<br>1, MIDDLETON STREET, KOLKATA-700 071, WEST BENGAL, INDIA, AN INDIAN COMPANY | | |
| **DATE OF REGISTRATION** | 06/02/2015 | |
| **TITLE** | TORCH | |
| **PRIORITY NA** | | |

| | | |
|---|---|---|
| **DESIGN NUMBER** | 267696 | 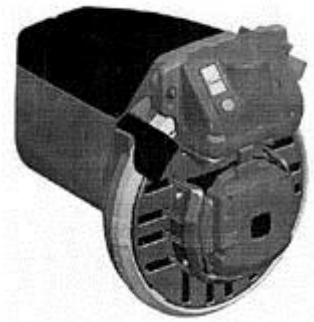 |
| **CLASS** | 15-06 | |
| **1)PICANOL N.V. OF**<br>STEVERLYNCKLAAN 15, B-8900 IEPER BELGIUM, BELGIUN COMPANY | | |
| **DATE OF REGISTRATION** | 26/11/2014 | |
| **TITLE** | WEAVING MACHINERY | |

**PRIORITY**

| PRIORITY NUMBER | DATE | COUNTRY |
|---|---|---|
| 002485540 | 18/06/2014 | OHIM |

| | | |
|---|---|---|
| **DESIGN NUMBER** | 261546 |  |
| **CLASS** | 07-05 | |
| **1)GROUPE SEB INDIA PRIVATE LIMITED,**<br>A-25, FIRST FLOOR, MOHAN CO-OPERATIVE INDUSTRIAL AREA, NEW DELHI-110 044, DELHI, INDIA | | |
| **DATE OF REGISTRATION** | 04/04/2014 | |
| **TITLE** | STEAM IRON | |
| **PRIORITY NA** | | |

| | |
|---|---|
| **DESIGN NUMBER** | 265855 |
| **CLASS** | 09-03 |
| **1)SAMSUNG ELECTRONICS CO., LTD.** 129, SAMSUNG-RO, YEONGTONG-GU, SUWON-SI, GYEONGGI-DO, 443-742, REPUBLIC OF KOREA, A COMPANY OF REPUBLIC OF KOREA | |
| **DATE OF REGISTRATION** | 22/09/2014 |
| **TITLE** | ICE PACK |
| **PRIORITY NA** | |

| | |
|---|---|
| **DESIGN NUMBER** | 266563 |
| **CLASS** | 13-99 |
| **1)GUJARAT ENERGY RESEARCH AND MANAGEMENT INSTITUTE, ADDRESS AT** 1ST FLOOR, ENERGY BUILDING, PANDIT DEENDAYAL PETROLEUM UNIVERSITY, RAISAN VILLAGE, GANDHINAGAR 382007, GUJARAT, INDIA | |
| **DATE OF REGISTRATION** | 09/10/2014 |
| **TITLE** | THERMAL COOLING DEVICE FOR PORTABLE ELECTRONIC EQUIPMENTS |
| **PRIORITY NA** | |

| | |
|---|---|
| **DESIGN NUMBER** | 266057 |
| **CLASS** | 26-05 |
| **1)KAPIL GUPTA, AN INDIAN COMPANY** OF THE ADDRESS: 349, SECTOR 15A, NOIDA, UTTAR PRADESH-201301, INDIA | |
| **DATE OF REGISTRATION** | 26/09/2014 |
| **TITLE** | LED LAMP |
| **PRIORITY NA** | |

| | |
|---|---|
| **DESIGN NUMBER** | 268121 |
| **CLASS** | 14-02 |
| **1)HO E SCREW & HARDWARE CO. LTD. (A COMPANY INCORPORATED AND EXISTING UNDER THE LAWS OF TAIWAN) WHOSE ADDRESS IS** NO. 8, LANE 42, SEC. 2, NAN KEN ROAD, LU-CHU, TAOYUAN 33855, TAIWAN | |
| **DATE OF REGISTRATION** | 11/12/2014 |
| **TITLE** | FLASH DRIVE |

**PRIORITY**

| PRIORITY NUMBER | DATE | COUNTRY |
|---|---|---|
| 103303739 | 25/06/2014 | TAIWAN |

| | |
|---|---|
| **DESIGN NUMBER** | 266667 |
| **CLASS** | 23-02 |
| **1)BEMIS MANUFACTURING COMPANY** 300 MILL STREET SHEBOYGAN FALLS, WISCONSIN, USA 53085. NATIONALITY: U.S.A. | |
| **DATE OF REGISTRATION** | 10/10/2014 |
| **TITLE** | TOILET SEAT |

**PRIORITY**

| PRIORITY NUMBER | DATE | COUNTRY |
|---|---|---|
| 29/489,013 | 25/04/2014 | U.S.A. |

| | |
|---|---|
| **DESIGN NUMBER** | 266784 |
| **CLASS** | 15-07 |
| **1)LG ELECTRONICS INC. OF** 20, YEOUIDO-DONG, YEONGDEUNGPO-GU, SEOUL 150- 721, REPUBLIC OF KOREA. | |
| **DATE OF REGISTRATION** | 17/10/2014 |
| **TITLE** | GUIDE DUCT FOR FREEZER |
| **PRIORITY NA** | |

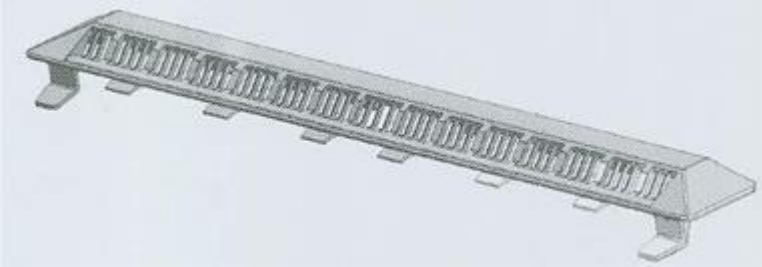

| | |
|---|---|
| **DESIGN NUMBER** | 268971 |
| **CLASS** | 14-03 |

**1)SAMSUNG ELECTRONICS CO., LTD., A KOREAN COMPANY, OF**
129, SAMSUNG-RO, YEONGTONG-GU; SUWON-SI, GYEONGGI-DO 443-742, REPUBLIC OF KOREA

| | |
|---|---|
| **DATE OF REGISTRATION** | 20/01/2015 |
| **TITLE** | COVER FOR MOBILE PHONE |

**PRIORITY**

| PRIORITY NUMBER | DATE | COUNTRY |
|---|---|---|
| 30-2014-0043775 | 05/09/2014 | REPUBLIC OF KOREA |

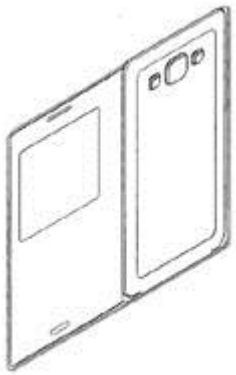

| | |
|---|---|
| **DESIGN NUMBER** | 263986 |
| **CLASS** | 09-01 |

**1)SHARON TACKER, A US CITIZEN OF**
8100 WYOMING BOULEVARD, NE, M4-#414, ALBUQUERQUE, NEW MEXICO 87113, UNITED STATES OF AMERICA

| | |
|---|---|
| **DATE OF REGISTRATION** | 11/07/2014 |
| **TITLE** | FLUID CONTAINER |

**PRIORITY**

| PRIORITY NUMBER | DATE | COUNTRY |
|---|---|---|
| 29/479,211 | 13/01/2014 | U.S.A. |

| | |
|---|---|
| **DESIGN NUMBER** | 269583 |
| **CLASS** | 07-02 |

**1)MR. GHISULAL RATHOD, MR. PRADEEP RATHOD, MR. PANKAJ RATHOD, MR. PANNALAL SHARMA, MR. JAYANTILAL JAIN, MRS. SANGEETA RATHOD AND MRS. BABITA RATHOD, ALL INDIAN NATIONALS TRADING UNDER THE NAME AND STYLE OF M/S. CELLO PLASTOTECH, A PARTNERSHIP FIRM REGISTERED UNDER THE PROVISION OF INDIAN PARTNERSHIP ACT, 1932, HAVING OFFICE ADDRESS AT**
CORPORATE AVENUE, ‘B’ WING, CELLO HOUSE, SONAWALA ROAD, GOREGAON (EAST), MUMBAI-400 063, MAHARASHTRA, INDIA

| | |
|---|---|
| **DATE OF REGISTRATION** | 13/02/2015 |
| **TITLE** | CASSEROLE |

**PRIORITY NA**

| | |
|---|---|
| **DESIGN NUMBER** | 269245 |
| **CLASS** | 14-02 |
| **1)BECKHOFF AUTOMATION GMBH,** EISERSTR. 5, D-33415 VERL, GERMANY, A LIMITED LIABILITY COMPANY UNDER THE LAWS OF GERMANY | |
| **DATE OF REGISTRATION** | 02/02/2015 |
| **TITLE** | HOUSING FOR ELECTRONIC CIRCUITRY |

**PRIORITY**

| PRIORITY NUMBER | DATE | COUNTRY |
|---|---|---|
| 002514224-0005 | 04/08/2014 | OHIM |

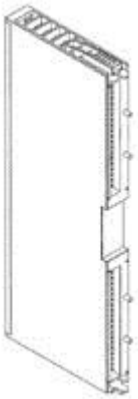

| | |
|---|---|
| **DESIGN NUMBER** | 269352 |
| **CLASS** | 09-99 |
| **1)RUPA & COMPANY LIMITED, OF** METRO TOWER, 1, HO-CHI-MINH SARANI, KOLKATA-700 071, WEST BENGAL, INDIA, AN INDIAN PUBLIC LIMITED COMPANY | |
| **DATE OF REGISTRATION** | 06/02/2015 |
| **TITLE** | PACKAGING FOR UNDERWEAR |
| **PRIORITY NA** | |

| | |
|---|---|
| **DESIGN NUMBER** | 267528 |
| **CLASS** | 26-03 |
| **1)CROMPTON GREAVES LIMITED,** CG HOUSE, 6TH FLOOR, DR. ANNIE BESANT ROAD, WORLI, MUMBAI - 400030, MAHARASHTRA, INDIA; AN INDIAN COMPANY | |
| **DATE OF REGISTRATION** | 20/11/2014 |
| **TITLE** | PUBLIC LIGHTING FIXTURE |
| **PRIORITY NA** | |

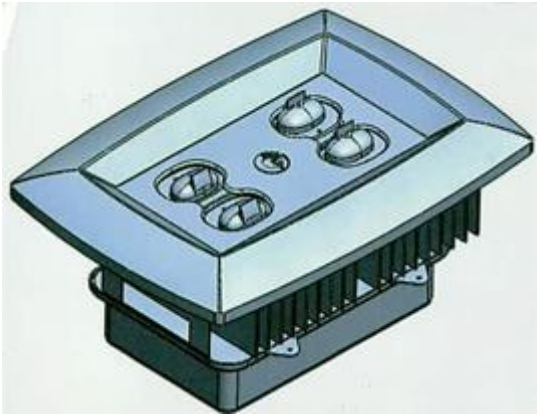

| | |
|---|---|
| **DESIGN NUMBER** | 265887 |
| **CLASS** | 05-05 |
| **1)M/S. SIDDHI VINAYAK KNOTS & PRINTS PVT. LTD. A COMPANY REGISTERED UNDER THE PROVISION OF COMPANIES ACT, 1956 HAVING ITS REGISTERED OFFICE AT M/S OF DISSHI VINAYAK KNOTS & [ROTS [VT/ ;TD., OF** 4103, 4TH FLOOR, J. J. A/C. MARKET, RING ROAD, SURAT-395002 (GUJARAT) INDIA. | |
| **DATE OF REGISTRATION** | 24/09/2014 |
| **TITLE** | TEXTILE FABRIC |
| **PRIORITY NA** | |

| | |
|---|---|
| **DESIGN NUMBER** | 266427 |
| **CLASS** | 08-05 |
| **1)GODREJ & BOYCE MFG. CO. LTD., COMPANY REGISTERED UNDER THE LAWS OF INDIA** HAVING ITS PLACE OF BUSINESS AT NO. 1, SIDCO INDUSTRIAL ESTATE, AMBATTUR, CHENNAI-600098, INDIA | |
| **DATE OF REGISTRATION** | 07/10/2014 |
| **TITLE** | ENTRY GUIDE FOR EASY ALIGNMENT OF PALLET WITH THE PALLET RAIL |
| **PRIORITY NA** | |

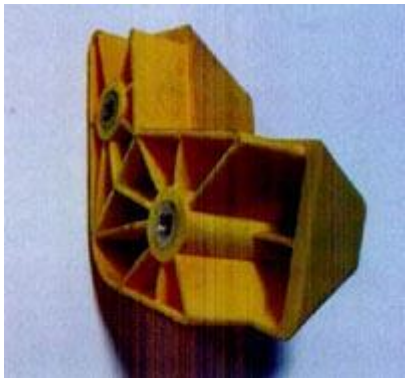

| | |
|---|---|
| **DESIGN NUMBER** | 266570 |
| **CLASS** | 06-07 |
| **1)M/S ARCHIE AND JUGHEAD INDIA PVT LTD. HAVING OFFICE AT** B-144, MAYAPURI INDUSTRIAL AREA, PHASE-1, NEW DELHI-110064, INDIA, AN INDIAN | |
| **DATE OF REGISTRATION** | 09/10/2014 |
| **TITLE** | PHOTO FRAME |
| **PRIORITY NA** | |

| | |
|---|---|
| **DESIGN NUMBER** | 266058 |
| **CLASS** | 26-05 |
| **1)KAPIL GUPTA, AN INDIAN COMPANY** OF THE ADDRESS: 349, SECTOR 15A, NOIDA, UTTAR PRADESH-201301, INDIA | |
| **DATE OF REGISTRATION** | 26/09/2014 |
| **TITLE** | LED LAMP |
| **PRIORITY NA** | |

| | |
|---|---|
| **DESIGN NUMBER** | 268373 |
| **CLASS** | 23-04 |
| **1)SYMPHONY LIMITED (A COMPANY INCORPORATED UNDER THE COMPANIES ACT, 1956) HAVING ITS PLACE OF BUSINESS AT** " SAUMYA", BAKERI CIRCLE, NAVRANGPURA, AHMEDABAD-380 014 (GUJARAT) INDIA | |
| **DATE OF REGISTRATION** | 23/12/2014 |
| **TITLE** | AIR COOLER |
| **PRIORITY NA** | |

| | |
|---|---|
| **DESIGN NUMBER** | 266669 |
| **CLASS** | 06-03 |
| **1)NATIONAL INSTITUTE OF DESIGN** LOCATED AT PALDI, AHMEDABAD 380007 GUJARAT, HAVING NATIONALITY AS INDIAN | |
| **DATE OF REGISTRATION** | 10/10/2014 |
| **TITLE** | TABLE |
| **PRIORITY NA** | |

| | |
|---|---|
| **DESIGN NUMBER** | 267838 |
| **CLASS** | 07-01 |

**1)MR. RAJESH ASRANI (INDIVIDUAL) WHOSE ADDRESS IS**
BUILDING NO. 8/B, FLAT NO. 132, SEVA SAMITI CO-OPERATIVE HOUSING SOCIETY LTD., MUMBAI-400037, MAHARASHTRA, INDIA

| | |
|---|---|
| **DATE OF REGISTRATION** | 01/12/2014 |
| **TITLE** | CUP |

**PRIORITY NA**

| | |
|---|---|
| **DESIGN NUMBER** | 268471 |
| **CLASS** | 14-03 |

**1)SAMSUNG ELECTRONICS CO., LTD.**
129, SAMSUNG-RO, YEONGTONG-GU, SUWON-SI, GYEONGGI-DO, 443-742, REPUBLIC OF KOREA, A COMPANY OF REPUBLIC OF KOREA

| | |
|---|---|
| **DATE OF REGISTRATION** | 29/12/2014 |
| **TITLE** | COVER FOR MOBILE PHONE |

**PRIORITY**

| PRIORITY NUMBER | DATE | COUNTRY |
|---|---|---|
| 30-2014-0041232 | 25/08/2014 | REPUBLIC OF KOREA |

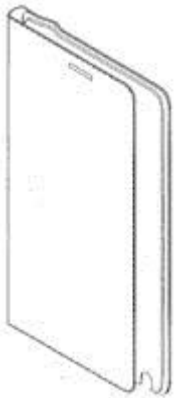

| | |
|---|---|
| **DESIGN NUMBER** | 268972 |
| **CLASS** | 14-03 |

**1)SAMSUNG ELECTRONICS CO., LTD., A KOREAN COMPANY, OF**
129, SAMSUNG-RO, YEONGTONG-GU; SUWON-SI, GYEONGGI-DO 443-742, REPUBLIC OF KOREA

| | |
|---|---|
| **DATE OF REGISTRATION** | 20/01/2015 |
| **TITLE** | COVER FOR MOBILE PHONE |

**PRIORITY**

| PRIORITY NUMBER | DATE | COUNTRY |
|---|---|---|
| 30-2014-0043776 | 05/09/2014 | REPUBLIC OF KOREA |

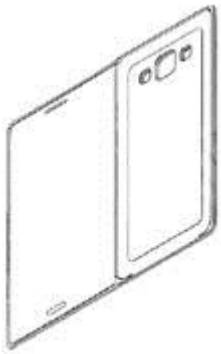

| | |
|---|---|
| **DESIGN NUMBER** | 269584 |
| **CLASS** | 07-02 |

**1)MR. GHISULAL RATHOD, MR. PRADEEP RATHOD, MR. PANKAJ RATHOD, MR. PANNALAL SHARMA, MR. JAYANTILAL JAIN, MRS. SANGEETA RATHOD AND MRS. BABITA RATHOD, ALL INDIAN NATIONALS TRADING UNDER THE NAME AND STYLE OF M/S. CELLO PLASTOTECH, A PARTNERSHIP FIRM REGISTERED UNDER THE PROVISION OF INDIAN PARTNERSHIP ACT, 1932, HAVING OFFICE ADDRESS AT**
CORPORATE AVENUE, 'B' WING, CELLO HOUSE, SONAWALA ROAD, GOREGAON (EAST), MUMBAI-400063, MAHARASHTRA, INDIA

| | |
|---|---|
| **DATE OF REGISTRATION** | 13/02/2015 |
| **TITLE** | CASSEROLE |

**PRIORITY NA**

| | |
|---|---|
| **DESIGN NUMBER** | 263987 |
| **CLASS** | 05-05 |

**1)VALENTINO S.P.A., A CORPORATION ORGANIZED AND EXISTING UNDER THE LAWS OF ITALY, OF**
VIA TURATI, 16/18, I-20121 MILANO, ITALY

| | |
|---|---|
| **DATE OF REGISTRATION** | 11/07/2014 |
| **TITLE** | TEXTILE FABRIC |

**PRIORITY**

| PRIORITY NUMBER | DATE | COUNTRY |
|---|---|---|
| 002383802 | 13/01/2014 | OHIM |

| | |
|---|---|
| **DESIGN NUMBER** | 269355 |
| **CLASS** | 23-04 |

**1)LUMINOUS POWER TECHNOLOGIES PVT. LTD., AN INDIAN COMPANY, INCORPORATED UNDER COMPANIES ACT. WHOES ADDRESS IS**
ARO TOWER, PLOT NO.-300, 2ND FLOOR, UDYOG VIHAR, PHASE-2, GURGAON-122016, HARYANA (INDIA)

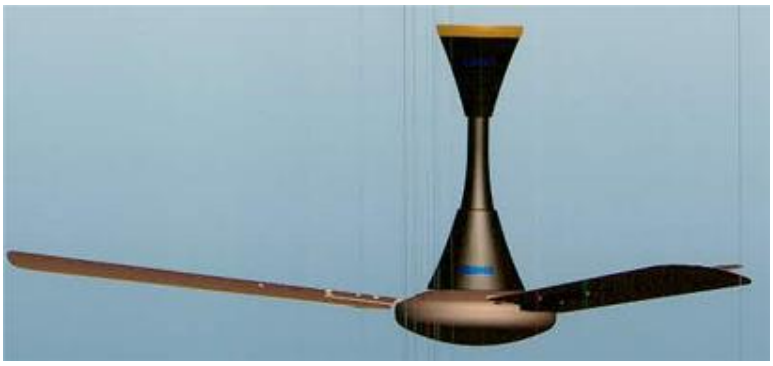

| | |
|---|---|
| **DATE OF REGISTRATION** | 06/02/2015 |
| **TITLE** | CEILING FAN |

**PRIORITY NA**

| | |
|---|---|
| **DESIGN NUMBER** | 266541 |
| **CLASS** | 07-02 |
| **1)AXIS IMPEX, A REGISTERED PARTNERSHIP FIRM AT, SHOP NO. 4, 83-85, DADY SHETH AGIARY LANE, MUMBAI-400002, MAHARASHTRA, INDIA. WHOSE PARTNERS ARE: 1. VELJI MONSHI SHAH 2. KANTI MONSHI SHAH 3. HITEN HANSRAJ SHAH & JITENDRA REGHAVJI GADA, ALL INDIAN NATIONALS AT** SHOP NO. 4, 83-85, DADY SHETH AGIARY LANE, MUMBAI-400 002, MAHARASHTRA, INDIA. | |
| **DATE OF REGISTRATION** | 09/10/2014 |
| **TITLE** | CASSEROLE |
| **PRIORITY NA** | |

| | |
|---|---|
| **DESIGN NUMBER** | 268005 |
| **CLASS** | 08-06 |
| **1)SANVI ENTERPRISE, AN INDIAN ENTITY HAVING ITS PRINCIPAL PLACE OF BUSINESS AT** NATIONAL HIGHWAY 8-B, OPPOSITE PARIN FURNITURE, KOTHARIYA SOLVENT AREA, NEAR DHOKIYA MOTORS, KOTHARIYA, DIST: RAJKOT-360004, GUJARAT, INDIA | |
| **DATE OF REGISTRATION** | 09/12/2014 |
| **TITLE** | CABINET HANDLE |
| **PRIORITY NA** | |

| | |
|---|---|
| **DESIGN NUMBER** | 268177 |
| **CLASS** | 31-00 |
| **1)M/S BLUE MOUNT APPLIANCES PVT. LTD., (A COMPANY INCORPORATED UNDER THE INDIAN COMPANIES ACT, 1956) HAVING ITS OFFICE AT** B-96, PUSHPANJALI ENCLAVE, PITAM PURA, OUTER RING ROAD, NEW DELHI-110034, AN INDIAN COMPANY | |
| **DATE OF REGISTRATION** | 15/12/2014 |
| **TITLE** | WATER PURIFIER |
| **PRIORITY NA** | |

| | |
|---|---|
| **DESIGN NUMBER** | 266852 |
| **CLASS** | 14-03 |
| **1)COVIDIEN LP, A LEGAL ENTITY OF THE STATE OF DELAWARE,** 15 HAMPSHIRE STREET, MANSFIELD MA02048, UNITED STATES OF AMERICA | |
| **DATE OF REGISTRATION** | 21/10/2014 |
| **TITLE** | SENSOR CONNECTOR |

**PRIORITY**

| PRIORITY NUMBER | DATE | COUNTRY |
|---|---|---|
| 29/488,944 | 24/04/2014 | U.S.A. |

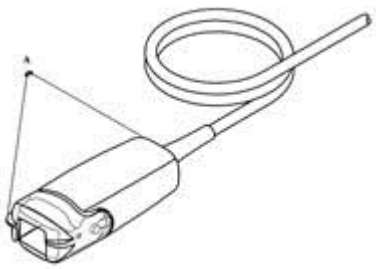

| | |
|---|---|
| **DESIGN NUMBER** | 262499 |
| **CLASS** | 25-02 |
| **1)USG INTERIORS, LLC A COMPANY OF USA OF** 550 WEST ADAMS STREET, CHICAGO, ILLINOIS 60661-3676, USA | |
| **DATE OF REGISTRATION** | 09/05/2014 |
| **TITLE** | L-UNIT OF A TWO-PIECE YOKE FOR A SUSPENDED CEILING |

**PRIORITY**

| PRIORITY NUMBER | DATE | COUNTRY |
|---|---|---|
| 29/475,682 | 05/12/2013 | U.S.A. |

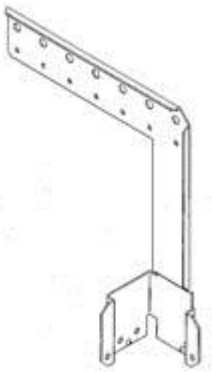

| | |
|---|---|
| **DESIGN NUMBER** | 268955 |
| **CLASS** | 09-01 |
| **1)MR. GHISULAL D. RATHOD, MR. PRADEEP G. RATHOD, MR. PANKAJ G. RATHOD, MR. GAURAV P. RATHOD, MRS. SANGEETA P. RATHOD AND MRS. BABITA P. RATHOD, ALL INDIAN NATIONALS TRADING UNDER THE NAME AND STYLE OF M/S. CELLO HOUSEHOLD PRODUCTS, A PARTNERSHIP FIRM REGISTERED UNDER THE PROVISION OF INDIAN PARTNERSHIP ACT, 1932, HAVING OFFICE ADDRESS AT** CORPORATE AVENUE, 'B' WING, CELLO HOUSE, SONAWALA ROAD, GOREGAON (EAST), MUMBAI-400 063 | |
| **DATE OF REGISTRATION** | 20/01/2015 |
| **TITLE** | BOTTLE |
| **PRIORITY NA** | |

| | |
|---|---|
| **DESIGN NUMBER** | 269223 |
| **CLASS** | 12-11 |
| **1)YAMAHA HATSUDOKI KABUSHIKI KAISHA,** 2500, SHINGAI, IWATA-SHI, SHIZUOKA-KEN 438-8501, JAPAN, A JAPANESE CORPORATION | |
| **DATE OF REGISTRATION** | 30/01/2015 |
| **TITLE** | MOTOR SCOOTER |

**PRIORITY**

| PRIORITY NUMBER | DATE | COUNTRY |
|---|---|---|
| 2014-016653 | 31/07/2014 | JAPAN |

| | |
|---|---|
| **DESIGN NUMBER** | 263575 |
| **CLASS** | 09-07 |
| **1)DURAN GROUP GMBH, A GERMAN COMPANY, OF** OTTO-SCHOTT-STRAßE 21, 97877 WERTHEIM, GERMANY | |
| **DATE OF REGISTRATION** | 23/06/2014 |
| **TITLE** | BOTTLE CAP |

**PRIORITY**

| PRIORITY NUMBER | DATE | COUNTRY |
|---|---|---|
| 002403808 | 13/02/2014 | OHIM |

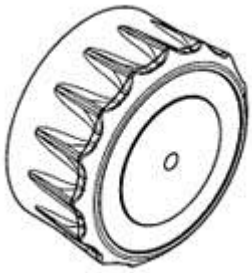

| | |
|---|---|
| **DESIGN NUMBER** | 266542 |
| **CLASS** | 07-02 |
| **1)AXIS IMPEX, A REGISTERED PARTNERSHIP FIRM AT, SHOP NO. 4, 83-85, DADY SHETH AGIARY LANE, MUMBAI-400002, MAHARASHTRA, INDIA. WHOSE PARTNERS ARE: 1. VELJI MONSHI SHAH 2. KANTI MONSHI SHAH 3. HITEN HANSRAJ SHAH & JITENDRA REGHAVJI GADA, ALL INDIAN NATIONALS AT** SHOP NO. 4, 83-85, DADY SHETH AGIARY LANE, MUMBAI-400 002, MAHARASHTRA, INDIA. | |
| **DATE OF REGISTRATION** | 09/10/2014 |
| **TITLE** | CASSEROLE |
| **PRIORITY NA** | |

| | |
|---|---|
| **DESIGN NUMBER** | 268178 |
| **CLASS** | 31-00 |
| **1)M/S BLUE MOUNT APPLIANCES PVT. LTD., (A COMPANY INCORPORATED UNDER THE INDIAN COMPANIES ACT, 1956) HAVING ITS OFFICE AT** B-96, PUSHPANJALI ENCLAVE, PITAM PURA, OUTER RING ROAD, NEW DELHI-110034, AN INDIAN COMPANY | |
| **DATE OF REGISTRATION** | 15/12/2014 |
| **TITLE** | WATER PURIFIER |
| **PRIORITY NA** | |


| | |
|---|---|
| **DESIGN NUMBER** | 268362 |
| **CLASS** | 02-04 |
| **1)SHREE RAM FOOTWEAR, J-3005, DSIDC INDUSTRIAL AREA, NARELA, DELHI-110040, INDIA** (AN INDIAN PROPRIETORSHIP FIRM WHOSE PROPRIETOR IS:- SH. RAJESH AGGARWAL AN INDIAN NATIONAL OF THE ABOVE ADDRESS | |
| **DATE OF REGISTRATION** | 23/12/2014 |
| **TITLE** | SOLE FOR FOOTWEAR |
| **PRIORITY NA** | |

| | |
|---|---|
| **DESIGN NUMBER** | 266637 |
| **CLASS** | 28-03 |
| **1)UDIT AGARWAL, AN INDIAN CITIZEN,** C/O GANGA SANITARY STORE, STATION ROAD, MORADABAD-244001, UP, INDIA | |
| **DATE OF REGISTRATION** | 10/10/2014 |
| **TITLE** | BATH SET |
| **PRIORITY NA** | |

| | |
|---|---|
| **DESIGN NUMBER** | 262521 |
| **CLASS** | 15-02 |
| **1)GARDNER DENVER NASH, LLC, OF** 200 SIMKO BOULEVARD CHARLEROI, PENNSYLVANIA 15022, U.S.A., US COMPANY | |
| **DATE OF REGISTRATION** | 09/05/2014 |
| **TITLE** | HOUSING OF A LIQUID RING PUMP |

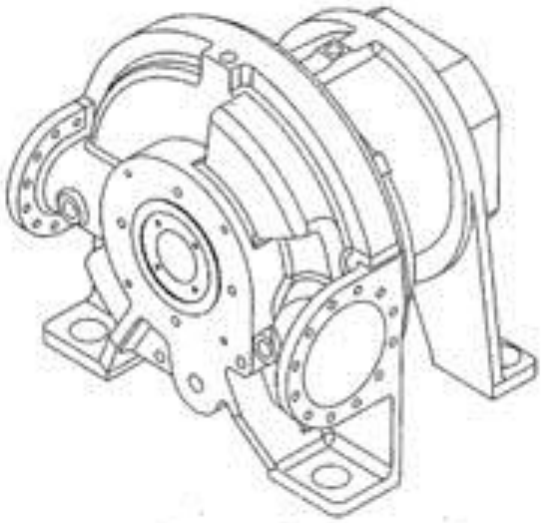

**PRIORITY**

| PRIORITY NUMBER | DATE | COUNTRY |
|---|---|---|
| 29/472,245 | 11/11/2013 | U.S.A. |

| | |
|---|---|
| **DESIGN NUMBER** | 269224 |
| **CLASS** | 12-09 |
| **1)MAHINDRA & MAHINDRA LIMITED, A COMPANY INCORPORATED UNDER THE COMPANIES ACT, 1913 WHOSE ADDRESS IS** GATEWAY BUILDING, APOLLO BUNDER, MUMBAI 400 001, MAHARASHTRA, INDIA | |
| **DATE OF REGISTRATION** | 30/01/2015 |
| **TITLE** | TRACTOR CAB |

**PRIORITY NA**

| | |
|---|---|
| **DESIGN NUMBER** | 269880 |
| **CLASS** | 12-16 |
| **1)TATA MOTORS LIMITED, AN INDIAN COMPANY OF** BOMBAY HOUSE, 24 HOMI MODY STREET, HUTATMA CHOWK, MUMBAI 400 001, MAHARASHTRA, INDIA | |
| **DATE OF REGISTRATION** | 26/02/2015 |
| **TITLE** | FRONT GRILLE OF A VEHICLE |

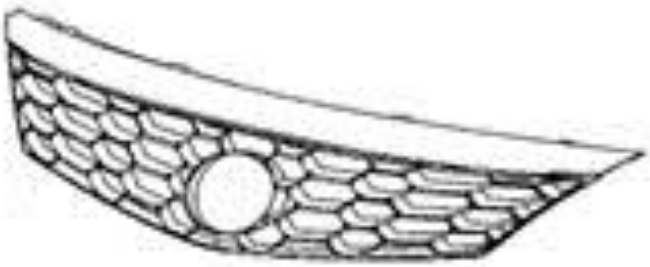

**PRIORITY NA**

| | |
|---|---|
| **DESIGN NUMBER** | 266543 |
| **CLASS** | 07-01 |

**1)AXIS IMPEX, A REGISTERED PARTNERSHIP FIRM AT, SHOP NO. 4, 83-85, DADY SHETH AGIARY LANE, MUMBAI-400002, MAHARASHTRA, INDIA. WHOSE PARTNERS ARE: 1. VELJI MONSHI SHAH 2. KANTI MONSHI SHAH 3. HITEN HANSRAJ SHAH & JITENDRA REGHAVJI GADA, ALL INDIAN NATIONALS AT**
SHOP NO. 4, 83-85, DADY SHETH AGIARY LANE, MUMBAI-400 002, MAHARASHTRA, INDIA.

| | |
|---|---|
| **DATE OF REGISTRATION** | 09/10/2014 |
| **TITLE** | WATER JUG |

**PRIORITY NA**

| | |
|---|---|
| **DESIGN NUMBER** | 269578 |
| **CLASS** | 26-05 |

**1)WIPRO ENTERPRISES LIMITED, A COMPANY REGISTERED UNDER THE COMPANIES ACT 1956**
HAVING ITS REGISTERED OFFICE AT #134, DODDAKANNELLI, SARJAPUR ROAD, BANGALORE -560035

| | |
|---|---|
| **DATE OF REGISTRATION** | 12/02/2015 |
| **TITLE** | LIGHTING FIXTURE |

**PRIORITY NA**

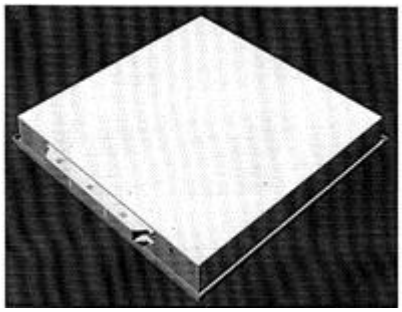

| | |
|---|---|
| **DESIGN NUMBER** | 269242 |
| **CLASS** | 14-02 |

**1)BECKHOFF AUTOMATION GMBH,**
EISERSTR. 5, D-33415 VERL, GERMANY, A LIMITED LIABILITY COMPANY UNDER THE LAWS OF GERMANY

| | |
|---|---|
| **DATE OF REGISTRATION** | 02/02/2015 |
| **TITLE** | HOUSING FOR ELECTRONIC CIRCUITRY |

**PRIORITY**

| PRIORITY NUMBER | DATE | COUNTRY |
|---|---|---|
| 002514224-0002 | 04/08/2014 | OHIM |

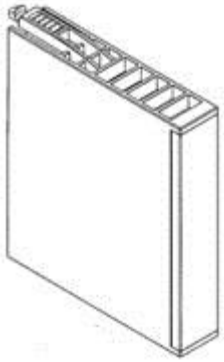

| | |
|---|---|
| **DESIGN NUMBER** | 267652 |
| **CLASS** | 07-02 |

**1)COUNCIL OF SCIENTIFIC AND INDUSTRIAL RESEARCH, RAFI MARG, NEW DELHI-110 001, INDIA,**
AN INDIAN REGISTERED BODY INCORPORATED UNDER THE REGISTRATION OF SOCIETIES ACT (ACT XXI IF 1860)

| | |
|---|---|
| **DATE OF REGISTRATION** | 21/11/2014 |
| **TITLE** | COOKING STOVE |

**PRIORITY NA**

| | |
|---|---|
| **DESIGN NUMBER** | 252289 |
| **CLASS** | 09-01 |

**1)MOLSON COORS BREWING COMPANY (UK) LIMITED A COMPANY INCORPORATED UNDER THE LAWS OF ENGLAND & WALES OF THE ADDRESS**
137 HIGH STREET BURTON UPON TRENT STAFFORDSHIRE DE14 1JZ UNITED KINGDOM

| | |
|---|---|
| **DATE OF REGISTRATION** | 13/03/2013 |
| **TITLE** | BOTTLE |

**PRIORITY**

| PRIORITY NUMBER | DATE | COUNTRY |
|---|---|---|
| DM/079 130 | 19/09/2012 | WIPO |

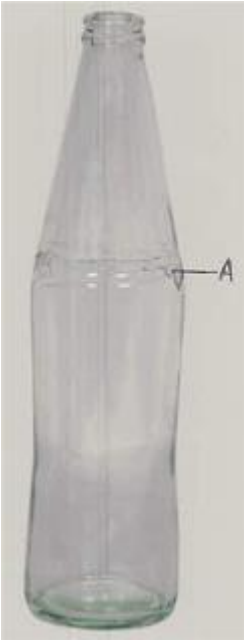


| | |
|---|---|
| **DESIGN NUMBER** | 267313 |
| **CLASS** | 08-03 |

**1)SUMITOMO ELECTRIC HARDMETAL CORP., A CORPORATION ORGANIZED AND EXISTING UNDER THE LAWS OF JAPAN, OF THE ADDRESS**
1-1, KOYAKITA 1-CHOME, ITAMI-SHI, HYOGO, JAPAN

| | |
|---|---|
| **DATE OF REGISTRATION** | 11/11/2014 |
| **TITLE** | CUTTING TOOL |

**PRIORITY**

| PRIORITY NUMBER | DATE | COUNTRY |
|---|---|---|
| 2014-010114 | 12/05/2014 | JAPAN |

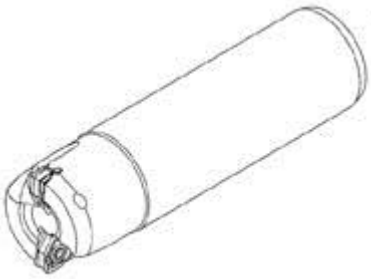

| | |
|---|---|
| **DESIGN NUMBER** | 267501 |
| **CLASS** | 19-04 |
| **1)FILEX SYSTEMS PVT. LTD,** 4379/4, 1ST FLOOR, ANSARI ROAD, DARYA GANJ, NEW DELHI-110002 (AN INDIAN COMPANY) | |
| **DATE OF REGISTRATION** | 19/11/2014 |
| **TITLE** | DIARY |
| **PRIORITY NA** | |

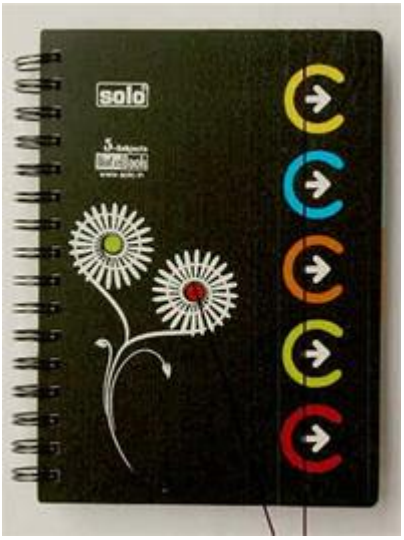


| | |
|---|---|
| **DESIGN NUMBER** | 266560 |
| **CLASS** | 09-04 |
| **1)PATOLIA LALJI KHIMJIBHAI, NATIONALITY INDIAN, ADDRESS AT** 7, VISHVAKETU TENAMENT, OPP. BAJRANG ASHRAM, THAKKARBAPA NAGAR, AHMEDABAD 382350, GUJARAT, INDIA | |
| **DATE OF REGISTRATION** | 09/10/2014 |
| **TITLE** | KITCHEN BASKET |
| **PRIORITY NA** | |

| | |
|---|---|
| **DESIGN NUMBER** | 268094 |
| **CLASS** | 13-03 |
| **1)SH. CHANDRESH KUMAR MAHESHWARI,** MOHALLA MOHAN, TELIYAN, KASGANJ, ETAH, U.P.-207123 AN INDIAN NATIONAL OF THE ABOVE ADDRESS | |
| **DATE OF REGISTRATION** | 09/12/2014 |
| **TITLE** | ELECTRIC CABLE |
| **PRIORITY NA** | |

| | |
|---|---|
| **DESIGN NUMBER** | 268877 |
| **CLASS** | 06-01 |

**1)WIM PLAST LIMITED, A PUBLIC LIMITED COMPANY REGISTERED UNDER THE PROVISIONS OF COMPANIES ACT, 1956, HAVING OFFICE ADDRESS AT**
1ST FLOOR, CORPORATE AVENUE, 'B' WING, CELLO HOUSE, SONAWALA ROAD, GOREGAON (EAST), MUMBAI-400 063, MAHARASHTRA, INDIA

| | |
|---|---|
| **DATE OF REGISTRATION** | 15/01/2015 |
| **TITLE** | CHAIR |

**PRIORITY NA**

| | |
|---|---|
| **DESIGN NUMBER** | 220562 |
| **CLASS** | 06-11 |

**1)S.N. KAPOOR EXPORTS, AN INDIAN PARTNERSHIP FIRM**
OF KHWASJI KA BAGH, AMER ROAD, JAIPUR-302002, RAJASTHAN (INDIA)

| | |
|---|---|
| **DATE OF REGISTRATION** | 30/12/2008 |
| **TITLE** | CARPET |

**PRIORITY NA**

| | |
|---|---|
| **DESIGN NUMBER** | 263984 |
| **CLASS** | 09-01 |

**1)SHARON TACKER, A US CITIZEN OF**
8100 WYOMING BOULEVARD, NE, M4-#414, ALBUQUERQUE, NEW MEXICO 87113, UNITED STATES OF AMERICA

| | |
|---|---|
| **DATE OF REGISTRATION** | 11/07/2014 |
| **TITLE** | FLUID CONTAINER |

**PRIORITY**

| PRIORITY NUMBER | DATE | COUNTRY |
|---|---|---|
| 29/479, 211 | 13/01/2014 | U.S.A. |

| | |
|---|---|
| **DESIGN NUMBER** | 269243 |
| **CLASS** | 14-02 |
| **1)BECKHOFF AUTOMATION GMBH,** EISERSTR. 5, D-33415 VERL, GERMANY, A LIMITED LIABILITY COMPANY UNDER THE LAWS OF GERMANY | |
| **DATE OF REGISTRATION** | 02/02/2015 |
| **TITLE** | HOUSING FOR ELECTRONIC CIRCUITRY |

**PRIORITY**

| PRIORITY NUMBER | DATE | COUNTRY |
|---|---|---|
| 002514224-0003 | 04/08/2014 | OHIM |

| | |
|---|---|
| **DESIGN NUMBER** | 266056 |
| **CLASS** | 26-03 |
| **1)PRAVIN DASHARATH KUDALE, AN INDIAN NATIONAL** 296, SHUKRAWAR PETH, LAXMI APT., PUNE-411002, M.S., INDIA | |
| **DATE OF REGISTRATION** | 26/09/2014 |
| **TITLE** | LIGHT POST |

**PRIORITY NA**

| | |
|---|---|
| **DESIGN NUMBER** | 266561 |
| **CLASS** | 09-04 |
| **1)PATOLIA LALJI KHIMJIBHAI, NATIONALITY INDIAN, ADDRESS AT** 7, VISHVAKETU TENAMENT, OPP. BAJRANG ASHRAM, THAKKARBAPA NAGAR, AHMEDABAD 382350, GUJARAT, INDIA | |
| **DATE OF REGISTRATION** | 09/10/2014 |
| **TITLE** | KITCHEN BASKET |

**PRIORITY NA**

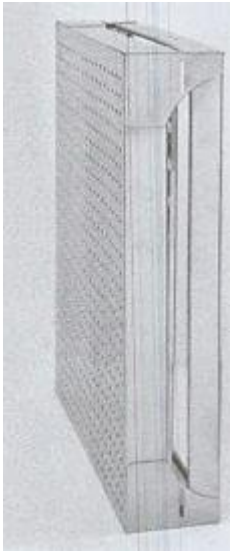

| | |
|---|---|
| **DESIGN NUMBER** | 266666 |
| **CLASS** | 23-02 |
| **1)BEMIS MANUFACTURING COMPANY**<br>300 MILL STREET SHEBOYGAN FALLS, WISCONSIN, USA 53085.<br>NATIONALITY: U.S.A. | |
| **DATE OF REGISTRATION** | 10/10/2014 |
| **TITLE** | TOILET SEAT |

**PRIORITY**

| PRIORITY NUMBER | DATE | COUNTRY |
|---|---|---|
| 29/489,013 | 25/04/2014 | U.S.A. |

| | |
|---|---|
| **DESIGN NUMBER** | 268964 |
| **CLASS** | 20-01 |
| **1)NAUTILUS HYOSUNG INC. A COMPANY INCORPORATED UNDER THE LAWS OF KOREA, NATIONALITY: KOREA, ADDRESS AT**<br>281 GWANGPYEONG-RO, GANGNAM-GU, SEOUL, KOREA. | |
| **DATE OF REGISTRATION** | 20/01/2015 |
| **TITLE** | AUTOMATED TELLER MACHINE |

**PRIORITY**

| PRIORITY NUMBER | DATE | COUNTRY |
|---|---|---|
| 30-2014-0046288 | 24/09/2014 | REPUBLIC OF KOREA |

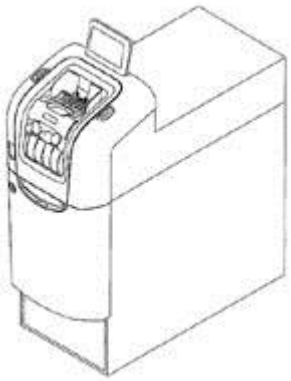

| | |
|---|---|
| **DESIGN NUMBER** | 220576 |
| **CLASS** | 06-11 |
| **1)S.N. KAPOOR EXPORTS, AN INDIAN PARTNERSHIP FIRM**<br>OF KHWASJI KA BAGH, AMER ROAD, JAIPUR-302002, RAJASTHAN (INDIA) | |
| **DATE OF REGISTRATION** | 30/12/2008 |
| **TITLE** | CARPET |

**PRIORITY NA**

| | |
|---|---|
| **DESIGN NUMBER** | 269582 |
| **CLASS** | 07-02 |

**1)MR. GHISULAL RATHOD, MR. PRADEEP RATHOD, MR. PANKAJ RATHOD, MR. PANNALAL SHARMA, MR. JAYANTILAL JAIN, MRS. SANGEETA RATHOD AND MRS. BABITA RATHOD, ALL INDIAN NATIONALS TRADING UNDER THE NAME AND STYLE OF M/S. CELLO PLASTOTECH, A PARTNERSHIP FIRM REGISTERED UNDER THE PROVISION OF INDIAN PARTNERSHIP ACT, 1932, HAVING OFFICE ADDRESS AT**
CORPORATE AVENUE, 'B' WING, CELLO HOUSE, SONAWALA ROAD, GOREGAON (EAST), MUMBAI-400 063, MAHARASHTRA, INDIA

| | |
|---|---|
| **DATE OF REGISTRATION** | 13/02/2015 |
| **TITLE** | CASSEROLE |

**PRIORITY NA**

| | |
|---|---|
| **DESIGN NUMBER** | 263985 |
| **CLASS** | 09-01 |

**1)SHARON TACKER, A US CITIZEN OF**
8100 WYOMING BOULEVARD, NE, M4-#414, ALBUQUERQUE, NEW MEXICO 87113, UNITED STATES OF AMERICA

| | |
|---|---|
| **DATE OF REGISTRATION** | 11/07/2014 |
| **TITLE** | FLUID CONTAINER |

**PRIORITY**

| PRIORITY NUMBER | DATE | COUNTRY |
|---|---|---|
| 29/479,211 | 13/01/2014 | U.S.A. |

| | |
|---|---|
| **DESIGN NUMBER** | 269244 |
| **CLASS** | 14-02 |

**1)BECKHOFF AUTOMATION GMBH,**
EISERSTR. 5, D-33415 VERL, GERMANY, A LIMITED LIABILITY COMPANY UNDER THE LAWS OF GERMANY

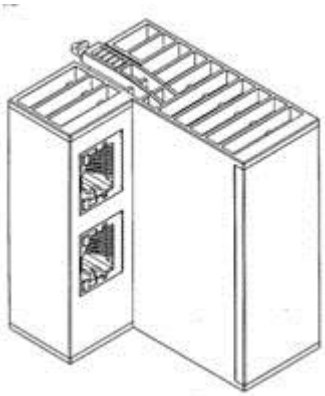

| | |
|---|---|
| **DATE OF REGISTRATION** | 02/02/2015 |
| **TITLE** | HOUSING FOR ELECTRONIC CIRCUITRY |

**PRIORITY**

| PRIORITY NUMBER | DATE | COUNTRY |
|---|---|---|
| 002514224-0004 | 04/08/2014 | OHIM |

| | |
|---|---|
| **DESIGN NUMBER** | 267527 |
| **CLASS** | 15-05 |

**1)BRY-AIR (ASIA) PVT LTD,**
20 RAJPUR ROAD, DELHI 110054, INDIAN COMPANY.

| | |
|---|---|
| **DATE OF REGISTRATION** | 20/11/2014 |
| **TITLE** | DEHUMIDIFIER FOR SWIMMING POOL |

**PRIORITY NA**

| | |
|---|---|
| **DESIGN NUMBER** | 267660 |
| **CLASS** | 14-03 |

**1)SHARP KABUSHIKI KAISHA, A JAPANESE CORPORATION OF**
22-22, NAGAIKE-CHO, ABENO-KU, OSAKA, JAPAN

| | |
|---|---|
| **DATE OF REGISTRATION** | 24/11/2014 |
| **TITLE** | TELEVISION SET |

**PRIORITY**

| PRIORITY NUMBER | DATE | COUNTRY |
|---|---|---|
| 2014-012026 | 04/06/2014 | JAPAN |

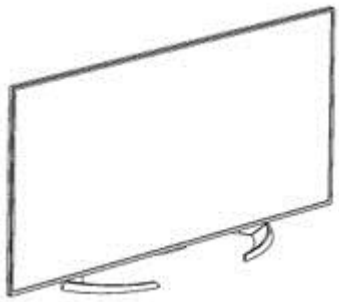

| | |
|---|---|
| **DESIGN NUMBER** | 266108 |
| **CLASS** | 06-01 |

**1)A3NP INDÚSTRIA E COMÉRCIO DE MÓVEIS S/A, A BRAZILIAN COMPANY OF**
RUA IGUATEMI, 192, CONJUNTO 174 B, ITAIM BIBI, SÃO PAULO-SP, ZIP CODE: 01451-010 BRAZIL

| | |
|---|---|
| **DATE OF REGISTRATION** | 29/09/2014 |
| **TITLE** | CHAIR |

**PRIORITY**

| PRIORITY NUMBER | DATE | COUNTRY |
|---|---|---|
| BR302014001511-7 | 04/04/2014 | BRAZIL |

| | | |
|---|---|---|
| **DESIGN NUMBER** | 266809 |  |
| **CLASS** | 12-16 | |
| **1)TVS MOTOR COMPANY LIMITED, AN INDIAN COMPANY INCORPORATED UNDER THE COMPANIES ACT, 1956, HAVING ITS REGISTERED OFFICE AT** ‘‘JAYALAKSHMI ESTATES’’, 29 (OLD NO. 8) HADDOWS ROAD, CHENNAI 600 006, TAMIL NADU, INDIA | | |
| **DATE OF REGISTRATION** | 20/10/2014 | |
| **TITLE** | FUEL TANK FOR MOTORCYCLE | |
| **PRIORITY NA** | | |

| | | |
|---|---|---|
| **DESIGN NUMBER** | 267784 |  |
| **CLASS** | 23-03 | |
| **1)MR. CHETAN K JOBANPUTRA-HUF, AN INDIAN CITIZEN, AGED ABOUT 50 YEARS, TRADING AS M/S CAMWAY CONCEPTS, AN INDIAN PROPRIETORSHIP FIRM HAVING OFFICE AT** 19, SANGAM SOCIETY, CITY LIGHT CIRCLE, PARLE POINT, SURAT-395007, GUJARAT, INDIA | | |
| **DATE OF REGISTRATION** | 27/11/2014 | |
| **TITLE** | APPARATUS FOR MOISTURE EXTRACTION FROM BAGASSE | |
| **PRIORITY NA** | | |