पेटेंट कार्यालय
शासकीय जर्नल

OFFICIAL JOURNAL
OF
THE PATENT OFFICE

निर्गमन सं. 19/2015	शुक्रवार	दिनांक: 08/05/2015
ISSUE NO. 19/2015	FRIDAY	DATE: 08/05/2015

पेटेंट कार्यालय का एक प्रकाशन

PUBLICATION OF THE PATENT OFFICE

INTRODUCTION

In view of the recent amendment made in the Patents Act, 1970 by the Patents (Amendment) Act, 2005 effective from 01st January 2005, the Official Journal of The Patent Office is required to be published under the Statute. This Journal is being published on weekly basis on every Friday covering the various proceedings on Patents as required according to the provision of Section 145 of the Patents Act 1970. All the enquiries on this Official Journal and other information as required by the public should be addressed to the Controller General of Patents, Designs & Trade Marks. Suggestions and comments are requested from all quarters so that the content can be enriched.

(Rajiv Aggarwal)
CONTROLLER GENERAL OF PATENTS, DESIGNS & TRADE MARKS

8TH MAY, 2015

CONTENTS

THE PATENT OFFICE
KOLKATA, 08/05/2015
Address of the Patent Offices/Jurisdictions
The following are addresses of all the Patent Offices located at different places having their Territorial Jurisdiction on a Zonal basis as shown below:-

1	Office of the Controller General of Patents, Designs & Trade Marks, Boudhik Sampada Bhavan, Near Antop Hill Post Office,S.M.Road,Antop Hill, Mumbai – 400 037 Phone: (91)(22) 24123311, Fax : (91)(22) 24123322 E-mail: cgpdtm@nic.in	4	The Patent Office, Government of India, Intellectual Property Rights Building, G.S.T. Road, Guindy, Chennai – 600 032. Phone: (91)(44) 2250 2081-84 Fax : (91)(44) 2250 2066 E-mail: chennai-patent@nic.in ❖ The States of Andhra Pradesh, Telangana, Karnataka, Kerala, Tamil Nadu and the Union Territories of Puducherry and Lakshadweep.
2	The Patent Office, Government of India, Boudhik Sampada Bhavan, Near Antop Hill Post Office,S.M.Road,Antop Hill, Mumbai – 400 037 Phone: (91)(22) 24137701 Fax: (91)(22) 24130387 E-mail: mumbai-patent@nic.in ❖ The States of Gujarat, Maharashtra, Madhya Pradesh, Goa and Chhattisgarh and the Union Territories of Daman and Diu & Dadra and Nagar Haveli	5	The Patent Office (Head Office), Government of India, Boudhik Sampada Bhavan, CP-2, Sector –V, Salt Lake City, Kolkata- 700 091 Phone: (91)(33) 2367 1943/44/45/46/87 Fax: (91)(33) 2367 1988 E-Mail: kolkata-patent@nic.in ❖ Rest of India
3	The Patent Office, Government of India, Boudhik Sampada Bhavan, Plot No. 32., Sector-14, Dwarka, New Delhi – 110075 Phone: (91)(11) 2808 1921 – 25 Fax: (91)(11) 2808 1920 & 2808 1940 E.mail: delhi-patent@nic.in ❖ The States of Haryana, Himachal Pradesh, Jammu and Kashmir, Punjab, Rajasthan, Uttar Pradesh, Uttaranchal, Delhi and the Union Territory of Chandigarh.		

Website: www.ipindia.nic.in
www.patentoffice.nic.in

All applications, notices, statements or other documents or any fees required by the Patents Act, 1970 and The Patents (Amendment) Act, 2005 or by the Patents (Amendment) Rules, 2006 will be received only at the appropriate offices of the Patent Office.

Fees: The Fees may either be paid in cash or may be sent by Bank Draft or Cheques payable to the Controller of Patents drawn on a scheduled Bank at the place where the appropriate office is situated.

पेटेंट कार्यालय

कोलकाता, दिनांक 08/05/2015

□कार्यालयों के क्षेत्राधिकार के पते

विभिन्न जगहों पर स्थित पेटेंट कार्यालय के पते आंचलिक आधार पर दर्शित उनके प्रादेशिक अधिकार क्षेत्र के साथ नीचे दिए गए है:-

1	कार्यालय : महानियंत्रक, एकस्व, अभिकल्प तथा व्यापार चिहन, एंटोप हिल डाकघर के समीप, एस. एम. रोड, एंटोप हिल, मुम्बई- 400 037, भारत, फोन: (91) (22) 24123311 फ़ैक्स: (91) (22) 24123322 ई. मेल: cgpdtm@nic.in	4	पेटेंट कार्यालय, भारत सरकार इंटेलेक्चुअल प्रॉपर्टी राइट्स बिल्डिंग, इंडस्ट्रियल इस्टेट एसआईडीसीओ आरएमडी गोडाउन एरिया एडजसेन्ट टु ईगल फ्लास्क, जी. एस. टी. रोड, गायन्डी चेन्नई - 600 032. फोन: (91)(44) 2250 2081-84 फ़ैक्स: (91)(44) 2250-2066 ई. मेल: chennai-patent@nic.in ❖ आन्ध्र प्रदेश, तेलंगाना, कर्नाटक, केरल, तमिलनाडु तथा पुडुचेरी राज्य क्षेत्र एवं संघ शासित क्षेत्र, लक्षदीप
2	पेटेंट कार्यालय, भारत सरकार बौद्धिक संपदा भवन, एंटोप हिल डाकघर के समीप, एस. एम. रोड, एंटोप हिल, मुम्बई- 400 037, फोन: (91) (22) 24137701 फ़ैक्स: (91) (22) 24130387 ई. मेल: Mumbai-patent@nic.in ❖ □गुजरात, महाराष्ट्र, मध्य प्रदेश, गोवा तथा छत्तीसगढ़ राज्य क्षेत्र एवं संघ शासित क्षेत्र, दमन तथा दीव, दादर और नगर हवेली•	5	पेटेंट कार्यालय, भारत सरकार कोलकाता, (प्रधान कार्यालय) बौद्धिक संपदा भवन, सीपी-2, सेक्टर- V, साल्ट लेक सिटी, कोलकाता-700 091, भारत. फोन: (91)(33) 2367 1943/44/45/46/87 फ़ैक्स:/Fax: (91)(33) 2367 1988 ई. मेल: kolkata-patent@nic.in ❖ भारत का अवशेष क्षेत्र
3	पेटेंट कार्यालय, भारत सरकार बौद्धिक संपदा भवन, प्लॉट सं. 32, सेक्टर- 14, द्वारका, नई दिल्ली- 110 075. फोन: (91)(11) 2808 1921-25 फ़ैक्स: (91)(11) 2808 1920, 2808 1940 ई. मेल: delhi-patent@nic.in हरियाणा, हिमाचल प्रदेश, जम्मू तथा कश्मीर, पंजाब,राजस्थान, उत्तर प्रदेश, दिल्ली तथा उत्तरांचल राज्य क्षेत्रों, एवं संघ शासित क्षेत्र चंडीगढ़		

वेबसाइट: http://www.ipindia.nic.in

www.patentoffice.nic.in

पेटेंट अधिनियम, 1970 तथा पेटेंट (संशोधन) अधिनियम, 2005 अथवा पेटेंट (संशोधन) नियम, 2006 द्वारा वांछित सभी आवेदन, सूचनाए, विवरण या अन्य दस्तावेज़ या कोई शुल्क पेटेंट कार्यालय के केवल उपयुक्त कार्यालय में स्वीकृत होंगे।

शुल्क: शुल्क या तो नगद रूप में या Controller of Patents के नाम में देय बैंक ड्राफ्ट या चेक के द्वारा भेजी जा सकती है जो उसी स्थान के किसी अनुसूचित बैंक में प्रदत्त हो जहाँ उपयुक्त कार्यालय स्थित है ।

SPECIAL NOTICE

18 Months publication as required under Section 11A of the Patents Act, 1970 as amended by the Patents (Amendment) Act, 2005.

Notice is hereby given that any person at any time before the grant of Patent may give representation by way of opposition to the Controller of Patents at appropriate office on the ground and in a manner specified under section 25(1) of the Patents (Amendment) Act, 2005 read with Rule 55 of the Patents (Amendment) Rules, 2006.

Notice is also given that if any interested person requests for copies of the complete specification, drawing and abstract of any application already published, the photocopy of the same can be supplied by the Patent Office as per the jurisdiction on payment of prescribed fees of Rs.8/- per page. If any further details are required to be obtained, the same can be provided by the respective Patent Offices on request.

(Rajiv Aggarwal)
CONTROLLER GENERAL OF PATENTS, DESIGNS & TRADE MARKS

SPECIAL NOTICE

Under the new provision of the Patents Act, 1970 as amended by the Patents (Amendment) Act, 2005 and Rules there under, Publication of the matter relating to Patents in the Official Gazette of India Part III, Section 2 has been discontinued and instead The Official Journal of the Patent Office is being published containing all the activities of The Patent Office such as publication of all the patent applications after 18th months , grant of patents & all other information in respect of the proceedings as required under the provisions of the Patents (Amendment) Act, 2005 and Rules thereunder on weekly basis on every **Friday**.

The Journal is uploaded in the website every Friday. So Paper form and CD-ROM form of the Journal are discontinued from 01/01/2009.

SPECIAL NOTICE

Every effort is being taken to publish all the patent applications under section 11(A) of the Patents Act. However, if duplication of publication of any application is found, then earlier date of publication will be taken for the purpose of provisional protection for applicant and Patent Office will grant Patent not before six months from the date of second publication, provided that there is there is no third party representation.

Early Publication:

The following patent applications have been published under section 11A (2) of The Patents (Amendment) Act 2005 and rule 24A of The Patents (Amendment) Rules, 2006. Any person may file representation by way of opposition to the Controller of Patents at the appropriate office against the grant of the patent in the prescribed manner under section 25(1) of the Patents (Amendment) Act 2005 read with the rule 55 of The Patents (Amendment) Rules, 2006:

(12) PATENT APPLICATION PUBLICATION

(21) Application No.733/DEL/2015 A

(19) INDIA

(22) Date of filing of Application :18/03/2015

(43) Publication Date : 08/05/2015

(54) Title of the invention : HAND HELD HEALTH FAUCET FOR CONVENTIONAL TOILETS

(51) International classification	:A47K4/00
(31) Priority Document No	:NA
(32) Priority Date	:NA
(33) Name of priority country	:NA
(86) International Application No	:NA
Filing Date	:NA
(87) International Publication No	: NA
(61) Patent of Addition to Application Number	:NA
Filing Date	:NA
(62) Divisional to Application Number	:NA
Filing Date	:NA

(71)**Name of Applicant :**
1)GAUTAM VIR
Address of Applicant :PLOT NO. 56, PHASE-3, IDA, JEEDIMETLA, HYDERABAD-500055 Andhra Pradesh India
(72)**Name of Inventor :**
1)GAUTAM VIR

(57) Abstract :
A hand held health faucet for conventional toilets comprising an inlet body (1) which has a housing at the front end to accommodate a regulator assembly (4) and a housing at the rear end to accommodate a plunger mechanism (2). The plunger mechanism (2) is connected to a lever (3) with a pin. Once the lever (3) is actuated, it compresses a spring (5) causing the plunger mechanism (2) to move back and open the sealing area on bush (6) allowing water to flow out through the regulator assembly (4). Rubber Gaskets (7) are accommodated on various parts for preventing water flow 1 leakage from the health faucet. The entire mechanism allows a user to select manner of water flow with automatic pressure regulation of the flow. The health faucet is attached to a water source through a hose pipe that can be of variable length.

No. of Pages : 14 No. of Claims : 5

(12) PATENT APPLICATION PUBLICATION
(21) Application No.844/DEL/2015 A
(19) INDIA
(22) Date of filing of Application :26/03/2015
(43) Publication Date : 08/05/2015

(54) Title of the invention : DOUBLE CARDAN YOKE ASSEMBLY.

(51) International classification :F16D3/32
(31) Priority Document No :NA
(32) Priority Date :NA
(33) Name of priority country :NA
(86) International Application No :NA
Filing Date :NA
(87) International Publication No : NA
(61) Patent of Addition to Application Number :NA
Filing Date :NA
(62) Divisional to Application Number :NA
Filing Date :NA

(71)**Name of Applicant :**
1)ROOP AUTOMOTIVES LIMITED
Address of Applicant :19, ROZ-KA-MEO, INDL. AREA. SOHNA, GURGAON-122103 Haryana India
(72)**Name of Inventor :**
1)MR. PAWAN KUMAR SALHOTRA

(57) Abstract :
This invention relates to a double cardan yoke assembly and in particular, this invention relates to a Double cardan yoke assembly which is used in CV joint of steering column for four wheeler. More particularly, this present invention relates to a double cardan yoke assembly which transmits torque to the wheels. Furthermore, this invention also relates to a double cardan yoke assembly which has the beneficial effects of having, safety and reliability.

No. of Pages : 21 No. of Claims : 9

(12) PATENT APPLICATION PUBLICATION
(21) Application No.1664/MUM/2015 A
(19) INDIA
(22) Date of filing of Application :24/04/2015
(43) Publication Date : 08/05/2015

(54) Title of the invention : SUBMERSIBLE PUMP WITH COOLING SYSTEM FOR MOTOR THROUGH SURROUNDING WATER

(51) International classification	:F04D7/04, F04D29/58, F25D17/02	(71)**Name of Applicant :** **1)Sona Pumps** Address of Applicant :39 to 43, Ubkhal G.I.D.C, At & Post: Kukarwada, Ta: Vijapur, Dist.: Mehsana-382830. Gujarat, India
(31) Priority Document No	:NA	(72)**Name of Inventor :**
(32) Priority Date	:NA	**1)Patel Ankur Natwarlal**
(33) Name of priority country	:NA	
(86) International Application No	:NA	
Filing Date	:NA	
(87) International Publication No	: NA	
(61) Patent of Addition to Application Number	:NA	
Filing Date	:NA	
(62) Divisional to Application Number	:NA	
Filing Date	:NA	

(57) Abstract :
Submersible Pump with Cooling System for Motor through Surrounding Water A submersible Pump with Cooling System for Motor through Surrounding Water consists of a pump assembly (2) and a motor assembly (3). Said pump assembly (2) pumps is adapted to pump the water from sump and transfer it to the desired location. Said motor assembly (3) operates the pump assembly (2) comprises a stator body (9) that defines the plurality of perforations (9a) from which surrounding water ingress and comes in contact with a stator winding (15) of a stator stack (10) accommodated in the stator body (9). Thus, heat of the stator stack (10) and its winding (15) is taken away by surrounding water. Also, heat of a rotor (12) that is surrounded by a rotor can/shell/partition (11) having an outer surface concentric with the stator stack (10) is dissipated into surrounding water. The shell (11) is filled with oil to keep cool and lubricate ball bearings (13, 14).

No. of Pages : 26 No. of Claims : 8

(12) PATENT APPLICATION PUBLICATION
(21) Application No.2577/MUM/2014 A
(19) INDIA
(22) Date of filing of Application :11/08/2014
(43) Publication Date : 08/05/2015

(54) Title of the invention : SCAN AND TRACK SOLAR WATER HEATING SYSTEM

(51) International classification	:F24J2/54, F24J2/14, F24J2/38
(31) Priority Document No	:NA
(32) Priority Date	:NA
(33) Name of priority country	:NA
(86) International Application No	:NA
Filing Date	:NA
(87) International Publication No	: NA
(61) Patent of Addition to Application Number	:1/MUM/2008
Filed on	:01/01/1900
(62) Divisional to Application Number	:NA
Filing Date	:NA

(71)**Name of Applicant :**
1)DR. ALPESH GUNVANT MEHTA
Address of Applicant :11/ 64, Anand Flats, Near G. H. B. Office, Vijaynagar Road, Naranpura, AHMEDABAD 380013. Gujarat India
(72)**Name of Inventor :**
1)DR. ALPESH GUNVANT MEHTA

(57) Abstract :
This invention relates to technology development, Scan & Track Solar Water Heating System. The invention has new modified Solar Collector (cFPC Concentrated Flat Plate collector or cETC- Concentrated Evacuated Tube Collector) based on a Mechatronic tracking system working on solar geometry to heat the water using solar radiation by convection . Modified Solar Collector track sun form sunrise to sunset ,always perpendicular to sun, utilizing full sunshine hours of that day place and time. Available solar water heating system more space with low range temperature, placed at some fixed- position and tilt angle and are not tracking. Solar radiation are at AIR MASS 1.5 The System heat the water depending on Solar Radiation of place with Air Mass 1 having 750 watt/meter square to 1100 watt/meter square area and works with wireless switching and fault detection using Global Positioning System. The material used are recyclable.

No. of Pages : 34 No. of Claims : 7

(12) PATENT APPLICATION PUBLICATION
(21) Application No.2578/MUM/2014 A
(19) INDIA
(22) Date of filing of Application :11/08/2014
(43) Publication Date : 08/05/2015

(54) Title of the invention : SOLAR HEATING SYSTEM BASED ON SOLAR GEOMETRY USING OPTICS FOR DIFFERENT HEATING APPLICATIONS.

(51) International classification	:G02B6/00, F24J2/06, G02B6/04
(31) Priority Document No	:NA
(32) Priority Date	:NA
(33) Name of priority country	:NA
(86) International Application No	:NA
Filing Date	:NA
(87) International Publication No	: NA
(61) Patent of Addition to Application Number	:1481/MUM/2012
Filed on	:01/01/1900
(62) Divisional to Application Number	:NA
Filing Date	:NA

(71)**Name of Applicant :**
1)DR. ALPESH GUNVANT MEHTA
Address of Applicant :11/ 64, Anand Flats, Near G. H. B. Office, Vijaynagar Road, Naranpura, AHMEDABAD 380 013 Gujarat India
(72)**Name of Inventor :**
1)DR. ALPESH GUNVANT MEHTA

(57) Abstract :
The Present Invention relates to New Technology Development: Solar Heating System based on Solar Geometry using optics for different heating applications. Sunshine (the total frequency spectrum of electromagnetic given by the Sun: having combination of bright light and radiant heat, Optics & Automation . Sunshine by tracking Square parabolic Collector guided with duel concave-plain lens, further guided using Line of Sight in air with combination (using mirrors) to receiver (heating applications) placed in-house or at outdoors. The above methods for light guide using Snell™s law principle (multiple refection in internal surface of pipe) . The principle used for light pipe is having problems with short distance light travel, lower efficiency, more space required and used for cool lighting. According to one exemplary embodiment of the present invention, guide the sunshine to indoors for various heating application with higher efficiency, reduce space and economical.

No. of Pages : 17 No. of Claims : 1

(12) PATENT APPLICATION PUBLICATION
(21) Application No.1476/MUM/2015 A
(19) INDIA
(22) Date of filing of Application :08/04/2015
(43) Publication Date : 08/05/2015

(54) Title of the invention : A PROCESS FOR MAKING SOLID POLYMERIC THERMOPLASTIC FOAM FLOATS

(51) International classification	:B29C44/34, C08J9/12
(31) Priority Document No	:873/MUM/2009
(32) Priority Date	:01/04/2009
(33) Name of priority country	:India
(86) International Application No	:NA
Filing Date	:NA
(87) International Publication No	: NA
(61) Patent of Addition to Application Number	:873/MUM/2009
Filed on	:01/01/1900
(62) Divisional to Application Number	:NA
Filing Date	:NA

(71)**Name of Applicant :**
1)Deo Makarand Vasant
Address of Applicant :Akshay Survey No.43, Plot-67, Nav-Sahyadri Housing Society, Karve Nagar, Pune-411 052, M.S., India Maharashtra India
(72)**Name of Inventor :**
1)Deo Makarand Vasant

(57) Abstract :
The present invention provides a process for making solid polymeric thermoplastic foam floats. the process steps of mixing a chemical blowing agent in the range of 0.05% to 6%, a nucleating agent in the range 0.0015% to 0.05% and a lubricating agent in the range of 0.015% to 2% with a polymer to form a mixture, which is stored in a hopper. Thereafter the mixture fed through a barrel to a mould of a plastic injection moulding machine having, wherein the barrel having heaters for maintaining controlled predefined temperature for melting the mixture therein. Then molten polymer mixture is injected into the mould cavity with a pre-desired shape, size and dimensions, the polymer melt that upon release of pressure forms into uniformly dispersed foamed cell structure. The injection pressure is set in the range of 250 to 800 kg/cm2, mould locking pressure is set in the range of 800 to 1000 kg/cm2 and holding time of the moulding machine is in the range of 4 to 18 seconds.

No. of Pages : 25 No. of Claims : 6

(12) PATENT APPLICATION PUBLICATION
(21) Application No.1636/MUM/2015 A
(19) INDIA
(22) Date of filing of Application :22/04/2015
(43) Publication Date : 08/05/2015

(54) Title of the invention : A METHOD FOR PRODUCTION OF FRUCTOSE FROM INULIN BY USING INULINASES ENZYME DERIVED FROM BACTERIA

(51) International classification	:C12N1/20, C12Q1/04, C12R1/11
(31) Priority Document No	:NA
(32) Priority Date	:NA
(33) Name of priority country	:NA
(86) International Application No	:NA
Filing Date	:NA
(87) International Publication No	: NA
(61) Patent of Addition to Application Number	:NA
Filing Date	:NA
(62) Divisional to Application Number	:NA
Filing Date	:NA

(71)**Name of Applicant :**
1)DR. RAJESH C. PATIL
Address of Applicant :DEPARTMENT OF MICROBIOLOGY, BHAVAN'S COLLEGE, ANDHERI (WEST), MUMBAI-400058, MAHARASHTRA, INDIA.
(72)**Name of Inventor :**
1)DR. RAJESH C. PATIL
2)DHANASHREE TALEKAR
3)DR. ANITA S. JADHAV
4)DR. ARVIND S KULKARNI
5)DR. GURUDEO T. PARULEKAR
6)DR. CHANDRA B. MAURYA
7)DR CHARUU P. KULKARNI
8)K. GEORGE ABRAHAM
9)DR. RAJENDRA S. DHAMNASKAR
10)NRUPA PATIL

(57) Abstract :
The object of the present invention is to provide a method for production of fructose as one of the form of the inulin, the same is derived from the inulin containing plant parts from different families of the plant kingdom, the plants selected for the present invention includes Onion, Garlic bulbs, the solvent system for the isolation of inulin is of the water-alcohol mixture, the enzymatic hydrolysis of the inulin by using inulinases enzyme derived from bacteria which is Kurthia zopfii at the pre-determined pH and temperature;

No. of Pages : 17 No. of Claims : 10

(12) PATENT APPLICATION PUBLICATION
(19) INDIA
(22) Date of filing of Application :05/12/2014
(21) Application No.3898/MUM/2014 A
(43) Publication Date : 08/05/2015

(54) Title of the invention : DYNAMIC HAND GESTURE RECOGNITION WITH RESPECT TO SIGN LANGUAGE

(51) International classification	:G09B21/00, G06K9/00
(31) Priority Document No	:NA
(32) Priority Date	:NA
(33) Name of priority country	:NA
(86) International Application No	:NA
Filing Date	:NA
(87) International Publication No	: NA
(61) Patent of Addition to Application Number	:NA
Filing Date	:NA
(62) Divisional to Application Number	:NA
Filing Date	:NA

(71)**Name of Applicant :**
1)SHAILENDRA C. BADWAIK
Address of Applicant :A5-19, SECTOR 27A, RUSTAN COLONY, NEAR CITY PRIDE SCHOOL, NIGADI, PRADHIKARAN, PUNE-411044, MAHARASHTRA, INDIA.
2)DR. SHASHIKANT D. LOKHANDE
(72)**Name of Inventor :**
1)SHAILENDRA C. BADWAIK
2)DR. SHASHIKANT D. LOKHANDE

(57) Abstract :
The focus of this research is to recognize ISL alphabets and sentences from video database and in real time . It is done by extracting different hand gesture features . ISL database accurately recognize ISL signs for both static and dynamic gestures. The palm orientation detection gave correct results to different hand poses. Also algorithms robustness is verified in varying background and all five ISL sentences with nine gestures are correctly recognize except skin colour background. From 44 Karpallavi alphabet data 41 static hand gestures are correctly recognized. Also from video database 10 Marathi sentence of hand gestures are correctly recognized and interpreted in audio form. The algorithm is deployed on embedded video image processing platform and able to recognize ISL number system and words. The algorithm is groomed up intelligently to tell no gesture, wrong gesture and insufficient light conditions. Also it is capable to add unknoen hand gesture on fly. The system will greatly benefit physically challenged deaf and dumb persons.

No. of Pages : 26 No. of Claims : 9

(12) PATENT APPLICATION PUBLICATION
(21) Application No.3899/MUM/2014 A
(19) INDIA
(22) Date of filing of Application :05/12/2014
(43) Publication Date : 08/05/2015

(54) Title of the invention : REAL TIME PALM SEGMENTATION FROM HAND GESTURE

(51) International classification	:G09B21/00, G06K9/00
(31) Priority Document No	:NA
(32) Priority Date	:NA
(33) Name of priority country	:NA
(86) International Application No	:NA
Filing Date	:NA
(87) International Publication No	: NA
(61) Patent of Addition to Application Number	:NA
Filing Date	:NA
(62) Divisional to Application Number	:NA
Filing Date	:NA

(71)**Name of Applicant :**
1)SHAILENDRA C. BADWAIK
Address of Applicant :A5-19, SECTOR 27A, RUSTAN COLONY, NEAR CITY PRIDE SCHOOL, NIGADI, PRADHIKARAN, PUNE-411044, MAHARASHTRA, INDIA.
2)DR. SHASHIKANT D. LOKHANDE
(72)**Name of Inventor :**
1)SHAILENDRA C. BADWAIK
2)DR. SHASHIKANT D. LOKHANDE

(57) Abstract :
A real time palm seperation/segmting from hand is prime consern in hand gesture based sign language recognition. The designed method to separate palm from hand works on. any background by taking into account forground skin colour. The invention is seperating dynamic / static palm doing hand gestures in front of camera. The algorithm is deployed on embedded image processing hardware platform and diffent sign language hand gestures palm is seperated . As palm is seperated from hand this method will save significant computation time which leads to improves hand gestue based sign language recognization.

No. of Pages : 9 No. of Claims : 9

(12) PATENT APPLICATION PUBLICATION
(21) Application No.1661/MUM/2015 A
(19) INDIA
(22) Date of filing of Application :24/04/2015
(43) Publication Date : 08/05/2015

(54) Title of the invention : RAWANDALE'S VIRTUAL FLUOROSCOPY SYSTEM (VFS) FOR PCNL SIMULATION

(51) International classification :A61B19/00
(31) Priority Document No :NA
(32) Priority Date :NA
(33) Name of priority country :NA
(86) International Application No :NA
Filing Date :NA
(87) International Publication No : NA
(61) Patent of Addition to Application Number :NA
Filing Date :NA
(62) Divisional to Application Number :NA
Filing Date :NA

(71)**Name of Applicant :**
1)DR. RAWANDALE PATIL ASHISH VISHWAS
Address of Applicant :INSTITUTE OF UROLOGY, SAKRI ROAD, DHULE-424001 (MS), INDIA Maharashtra India
(72)**Name of Inventor :**
1)DR. RAWANDALE PATIL ASHISH VISHWAS

(57) Abstract :
The Rawandales Virtual fluoroscopy System (VFS) for PCNL Simulation is useful for training the learner to target the kidney during PCNL and thus decreasing the learning curve of initial puncture. Procedure for using the Rawandales Virtual fluoroscopy System (VFS) for PCNL Simulation 1. The surgeon stands in front of the Rawandales Virtual fluoroscopy System (VFS) for PCNL Simulation - Fig 1 2. The optical C arm is positioned vertically. 3. The surgeon holds the initial puncture needle in a stance to puncture the transparent screen. 4. The foot switch is pressed to visualise the kidney replica against the screen. The shadow is captured by the camera and shown on the monitor. 5. The surgeon uses the routine surgical technique to aim at the kidney shadow seen on the monitor. 6. The surgeon can practice the same technique repeatedly till he is confident.

No. of Pages : 15 No. of Claims : 9

(12) PATENT APPLICATION PUBLICATION
(19) INDIA
(22) Date of filing of Application :27/03/2015
(21) Application No.1039/MUM/2015 A
(43) Publication Date : 08/05/2015

(54) Title of the invention : BIOCHEMICAL TECHNIQUE FOR SEX DETERMINATION IN PAPAYA SEEDLINGS.

(51) International classification	:C07K14/415, C12Q1/68
(31) Priority Document No	:NA
(32) Priority Date	:NA
(33) Name of priority country	:NA
(86) International Application No	:NA
Filing Date	:NA
(87) International Publication No	: NA
(61) Patent of Addition to Application Number	:NA
Filing Date	:NA
(62) Divisional to Application Number	:NA
Filing Date	:NA

(71)**Name of Applicant :**
1)DR. BORKAR SURESH GOVINDRAO
Address of Applicant :HEAD DEPARTMENT OF PLANT PATHOLOGY, MAHATMA PHULE KRISHI VIDYAPEETH, RAHURI-413722, DIST. AHMEDNAGAR, (M.S.), INDIA. Maharashtra India
(72)**Name of Inventor :**
1)DR. BORKAR SURESH GOVINDRAO

(57) Abstract :
Quick determination of sex in papaya at seedling stage can be carried out by using 3 reagents viz., 2 drops of 5 M KOH solution + 2 drops of folin phenol reagent as identification reagents whereas 1 drop of phenolphthone reagent as confirmation reagent. Tissue of petiole of papayas seedling react with these reagent to produce test reaction within 3-4 minutes for female plant and within 7-8 min. for male plant. Such biochemical test is not available to determine/identify/differentiate sex in papaya. This biochemical test can be used by papaya seedling growers or papaya farmers to identify the male or female plants at seedling stage itself and therefore has commercial value and therefore needs patent.

No. of Pages : 9 No. of Claims : 1

(12) PATENT APPLICATION PUBLICATION
(19) INDIA
(22) Date of filing of Application :27/03/2015

(21) Application No.1098/MUM/2015 A
(43) Publication Date : 08/05/2015

(54) Title of the invention : THREE IN ONE PROCESS DIE

(51) International classification	:B21D53/62, B21D53/00
(31) Priority Document No	:NA
(32) Priority Date	:NA
(33) Name of priority country	:NA
(86) International Application No	:NA
Filing Date	:NA
(87) International Publication No	: NA
(61) Patent of Addition to Application Number	:NA
Filing Date	:NA
(62) Divisional to Application Number	:NA
Filing Date	:NA

(71)**Name of Applicant :**
1)Ankitkumar Satishkumar Shah
Address of Applicant :Block No. 33 , Sacheta Udyognagar Village Mahiyal , Tal Talod, PIN 383215 Dist. Sabarkantha, Gujarat India
(72)**Name of Inventor :**
1)Ankitkumar Satishkumar Shah

(57) Abstract :
The present invention relates to THREE IN ONE PROCESS DIE wherein die (1) is stable at downside when ring (2) comes from upside and touch to die cutting process happened as both materials are hard ; then the mould gives the pressure to material for required shape of article; at the time of molding the article and die does not allow to move raw article to unhide by maintaining pressure; when the mould has fixed its size after that the ring on punch (3) will it™s out cutting.

No. of Pages : 12 No. of Claims : 5

(12) PATENT APPLICATION PUBLICATION
(21) Application No.1582/MUM/2015 A
(19) INDIA
(22) Date of filing of Application :17/04/2015
(43) Publication Date : 08/05/2015

(54) Title of the invention : BIRD DETERRENT DEVICE

(51) International classification :A01M29/32
(31) Priority Document No :NA
(32) Priority Date :NA
(33) Name of priority country :NA
(86) International Application No :NA
Filing Date :NA
(87) International Publication No : NA
(61) Patent of Addition to Application Number :NA
Filing Date :NA
(62) Divisional to Application Number :NA
Filing Date :NA

(71)**Name of Applicant :**
1)Pest Control (India) Pvt. Ltd.
Address of Applicant :˜Narayani,™ 4th Floor, Ambabai Temple Compound, Goregaon (West), Mumbai - 400062, India Maharashtra India
(72)**Name of Inventor :**
1)Joshua Rao
2)Shankar Ghuge
3)Maninderjit Singh Sethi

(57) Abstract :
A bird deterrent device having a base made of polycarbonate and the spikes is composed of a metal or metal composite. The base can be configured such that the base has sufficient strength to hold the spikes when placed in the mounting surface. A plurality of spikes is coupled to the base so that the device is ready to install and deters birds even at the corners.

No. of Pages : 9 No. of Claims : 11

(12) PATENT APPLICATION PUBLICATION
(19) INDIA
(22) Date of filing of Application :28/08/2013
(21) Application No.2803/MUM/2013 A
(43) Publication Date : 08/05/2015

(54) Title of the invention : A HERBAL PESTICIDE COMPOSITION FOR PLANT TO PREVENT AND CURE OF NEMATODES

(51) International classification	:A61k36/00, A01P 5/00
(31) Priority Document No	:NA
(32) Priority Date	:NA
(33) Name of priority country	:NA
(86) International Application No	:NA
Filing Date	:NA
(87) International Publication No	: NA
(61) Patent of Addition to Application Number	:NA
Filing Date	:NA
(62) Divisional to Application Number	:NA
Filing Date	:NA

(71)**Name of Applicant :**
1)SAMEER RAJAN PATHARE
Address of Applicant :112, ASHARAJ, GULMOHAR VIHAR COLONY PIPELINE ROAD NASHIK, - 422 007, MAHARASHTRA, INDIA
(72)**Name of Inventor :**
1)SAMEER RAJAN PATHARE

(57) Abstract :
The invention relates to a herbal pesticide composition for plant to prevent and cure of NEMATODES. The said composition comprises mixture of reetha (soap nut) powder 8.0%, CNSL (Cashew Nut Shell Liquid), 3.00%, emulsifier 3.00%, and fillers 11.00% thoroughly mixed in a 75.00% herbal extract of herbs whole aloe, euphorbia (Euphorbia tirucalli), and caltrops. The said herbal extract having 8% whole aloe, 8% euphorbia (Euphorbia tirucalli) and 8% caltrops. The said filler comprises BKC (Benzalkonium Chloride):- 4 %, Formaldehyde 5 %, Vegetable Oil 2 %. The composition, the said mixture made in to GRANULAR fertilizer based on Bentonite to ease the use in certain crops such as Paddy, wheat, Sugarcane and like.

No. of Pages : 9 No. of Claims : 6

(12) PATENT APPLICATION PUBLICATION
(21) Application No.1614/MUM/2015 A
(19) INDIA
(22) Date of filing of Application :21/04/2015
(43) Publication Date : 08/05/2015

(54) Title of the invention : MODIFIED PAPER SHEET PERFORATOR CUM STAPLER

(51) International classification	:B65H3/24, B26D11/00
(31) Priority Document No	:NA
(32) Priority Date	:NA
(33) Name of priority country	:NA
(86) International Application No	:NA
Filing Date	:NA
(87) International Publication No	: NA
(61) Patent of Addition to Application Number	:NA
Filing Date	:NA
(62) Divisional to Application Number	:NA
Filing Date	:NA

(71)**Name of Applicant :**
1)AGRAWAL MOHIT DAUDAYAL
Address of Applicant :PIMPRI CHINCHWAD COLLEGE OF ENGINEERING, SECTOR 26, PRADHIKARAN NIGDI, PUNE-411044, MAHARASHTRA STATE. Maharashtra India
2)CHANDANE AMEY RAJENDRA
(72)**Name of Inventor :**
1)AGRAWAL MOHIT DAUDAYAL
2)CHANDANE AMEY RAJENDRA

(57) Abstract :
A system which is a modified version of the paper sheet perforator (commonly known as paper punching machine) also attached with a stapler. The conventional paper sheet perforator is reduced in size such that there is a provision for one punching hole instead of the conventional two punching hole. The assembly of the paper sheet perforator and the stapler is held together with the help of one long bolt which is 30 to 35mm. The entire assembly is of 45 to 55mm length and nearly 50 mm width. The sheet of paper that is to be punched is first folded (to obtain proper alignment) then inserted through the gap in the perforator. The result is that there are two holes on the sheet of paper by a single punch. The die plate (base plate) also has the provision for bending the staple pins and holding the plastic reservoir. The stapler that is attached is a medium sized stapler that is available in the market for a nominal cost. The base part of the stapler that does the bending of pins is incorporated within the base part of the device. So the working of two devices is done by a single apparatus. The main objective of this invention is to provide the benefits of two daily used devices into one. There is also a considerable reduction in space and material. This system can be used anywhere by students, clerks, office workers or anyone who use staplers and perforators for daily use. The system is reliable and works like the conventional devices.

No. of Pages : 15 No. of Claims : 9

(12) PATENT APPLICATION PUBLICATION
(21) Application No.504/MUM/2015 A
(19) INDIA
(22) Date of filing of Application :17/02/2015
(43) Publication Date : 08/05/2015

(54) Title of the invention : TRANSPARENT CONTACTLESS RFID TOKENS

(51) International classification	:G06K19/077, G06q20/00,H04H60/37
(31) Priority Document No	:NA
(32) Priority Date	:NA
(33) Name of priority country	:NA
(86) International Application No	:NA
Filing Date	:NA
(87) International Publication No	: NA
(61) Patent of Addition to Application Number	:NA
Filing Date	:NA
(62) Divisional to Application Number	:NA
Filing Date	:NA

(71)**Name of Applicant :**
1)BHAS P. RAVINDRANATH
Address of Applicant :501, Raj Sarovar, Bhakti Complex, New Link Road, Dahisar (West), Mumbai-400068, Maharashtra, India.
(72)**Name of Inventor :**
1)BHAS P. RAVINDRANATH

(57) Abstract :
The embodiment of the present invention relates to a transparent contactless RFID token. The transparent contactless token comprising a transparent top cover, a bottom cover, a first printed overlay, a second overlay and an RFID label. The transparent top cover and the bottom cover in combination defines a housing for receiving the first printed overlay, the second overlay and the RFID label.

No. of Pages : 15 No. of Claims : 7

(12) PATENT APPLICATION PUBLICATION
(21) Application No.2713/MUM/2014 A
(19) INDIA
(22) Date of filing of Application :22/08/2014
(43) Publication Date : 08/05/2015

(54) Title of the invention : MULTIPURPOSE PORTABLE GEARED CYCLE

(51) International classification	:B62M 6/70, B62K21/06, B62M3/00	(71)**Name of Applicant :** **1)VINAV BHATNAGAR** Address of Applicant :vinav bhatnagar Quarter no. 8-c, type-4, sector-5, Ordnance Factory Chanda Estate, Dist. chandrapur, Maharastra PIN-442501 Maharashtra India
(31) Priority Document No	:NA	
(32) Priority Date	:NA	(72)**Name of Inventor :**
(33) Name of priority country	:NA	**1)VINAV BHATNAGAR**
(86) International Application No	:NA	
Filing Date	:NA	
(87) International Publication No	: NA	
(61) Patent of Addition to Application Number	:NA	
Filing Date	:NA	
(62) Divisional to Application Number	:NA	
Filing Date	:NA	

(57) Abstract :
A multipurpose portable geared cycle is useful for raising or pulling heavy load. This portable geared cycle can be used anywhere for raising or pulling heavy load. A portable geared cycle is operated manually and allows easy operation for purposes related to pulling or lifting a heavy load, also it is cheapest method to provide a hoist at construction site. A multipurpose portable geared cycle comprises a pair of crank with pedals, a gear transmission, a rope drum and a rope attached with the rope drum.

No. of Pages : 10 No. of Claims : 6

(12) PATENT APPLICATION PUBLICATION
(21) Application No.1717/MUM/2015 A
(19) INDIA
(22) Date of filing of Application :30/04/2015
(43) Publication Date : 08/05/2015

(54) Title of the invention : A FLOAT OPERATED SOLAR TRACKING SYSTEM

(51) International classification	:F24J2/38, G01S3/782, F24J2/54
(31) Priority Document No	:NA
(32) Priority Date	:NA
(33) Name of priority country	:NA
(86) International Application No	:NA
Filing Date	:NA
(87) International Publication No	: NA
(61) Patent of Addition to Application Number	:NA
Filing Date	:NA
(62) Divisional to Application Number	:NA
Filing Date	:NA

(71)**Name of Applicant :**
1)LAXMIKANT MANOHAR KAPSIKAR
Address of Applicant :PLOT NO. 24/A, VINAYAK ADARSH HOUSING SOCIETY, TILAK NAGAR, AURANGABAD-431005 Maharashtra India
(72)**Name of Inventor :**
1)GAJANAN VITHAL SATHYE
2)MANOHAR GANPATRAO KAPSIKAR

(57) Abstract :
The present invention provides a float operated solar tracking system for a concentrating solar device wherein the solar device follows the path of Sun in the sky faithfully while minimizing orientation errors with the help of a float operated system. Said float operated system is controlled by one or more external tracking control systems in order to monitor the inflow and outflow of a liquid in tanks which in turn provide movement to said solar device with respect to Sun. The system is easy to manufacture, cost effective and useful for small users as well as for mega projects.

No. of Pages : 22 No. of Claims : 8

(12) PATENT APPLICATION PUBLICATION
(21) Application No.1272/MUM/2015 A
(19) INDIA
(22) Date of filing of Application :31/03/2015
(43) Publication Date : 08/05/2015

(54) Title of the invention : LIFTING MECHANISM FOR SWITCHGEAR ASSEMBLIES

(51) International classification	:H02B3/00, H02B11/00
(31) Priority Document No	:NA
(32) Priority Date	:NA
(33) Name of priority country	:NA
(86) International Application No	:NA
Filing Date	:NA
(87) International Publication No	: NA
(61) Patent of Addition to Application Number	:NA
Filing Date	:NA
(62) Divisional to Application Number	:NA
Filing Date	:NA

(71)**Name of Applicant :**
1)DESHPANDE MANOHAR VISHWANATH
Address of Applicant :Flat No. 4, Priyanka Pride Apartment, Mahatma Nagar, Near Water Tank, Nashik -422007, Maharashtra, India
2)DESHPANDE PARIKSHIT MANOHAR
(72)**Name of Inventor :**
1)DESHPANDE MANOHAR VISHWANATH
2)DESHPANDE PARIKSHIT MANOHAR

(57) Abstract :
A lifting mechanism for raising and lowering of an instrument transformer in a switchgear assembly comprises a frame structure. The frame structure comprises a pair of vertical guideways, a horizontal support member connecting the vertical guideways disposed at an operative top of the vertical guideways, and a base configured to support the vertical guideways disposed at an operative bottom having at least one closable opening. The lifting mechanism also comprises a driven assembly mounted on the frame structure and functionally coupled with a trolley to perform raising and lowering of the trolley, wherein the trolley is functionally coupled with the instrument transformer. The lifting mechanism further comprises a drive assembly functionally coupled with the driven assembly

No. of Pages : 17 No. of Claims : 8

(12) PATENT APPLICATION PUBLICATION
(19) INDIA
(22) Date of filing of Application :05/03/2014
(21) Application No.402/MUMNP/2014 A
(43) Publication Date : 08/05/2015

(54) Title of the invention : VARIABLE RELEASE WATER DISPERSIBLE GRANULE COMPOSITION

(51) International classification	:A01N25/28,A01N33/18,A01N43/80
(31) Priority Document No	:3081/MUM/2011
(32) Priority Date	:02/11/2011
(33) Name of priority country	:India
(86) International Application No	:PCT/IN2012/000721
Filing Date	:02/11/2012
(87) International Publication No	:WO 2013/105107
(61) Patent of Addition to Application Number	:NA
Filing Date	:NA
(62) Divisional to Application Number	:NA
Filing Date	:NA

(71)**Name of Applicant :**
1)SHAH Deepak
Address of Applicant :501/502 Vandana Apartment Janki Kutir Juhu Church Road Juhu Mumbai 400 009 Maharashtra India.
(72)**Name of Inventor :**
1)SHAH Deepak
2)RAMDAS Puthenveetil Kunjukrishna Menon

(57) Abstract :
A water dispersible granule composition comprising microcapsules comprising at least one agrochemical active ingredient encapsulated within a urea formaldehyde polymeric shell wall at least one inert filler and at least one agrochemical excipients.

No. of Pages : 24 No. of Claims : 32

(12) PATENT APPLICATION PUBLICATION
(21) Application No.1721/MUM/2015 A
(19) INDIA
(22) Date of filing of Application :30/04/2015
(43) Publication Date : 08/05/2015

(54) Title of the invention : SMART WASTE COLLECTION AND MANAGEMENT SYSTEM

(51) International classification	:G01G19/00, G06Q10/00
(31) Priority Document No	:NA
(32) Priority Date	:NA
(33) Name of priority country	:NA
(86) International Application No	:NA
Filing Date	:NA
(87) International Publication No	: NA
(61) Patent of Addition to Application Number	:NA
Filing Date	:NA
(62) Divisional to Application Number	:NA
Filing Date	:NA

(71)**Name of Applicant :**
1)PRADEEP BAJRANG MANE
Address of Applicant :35, SAVARKAR SOCIETY, SAHAKARNAGAR NO 2, PUNE 411009, INDIA Maharashtra India
2)LEKHRAJ RAGHUNATH NERE
3)UTKARSH BHAIDAS PATIL
4)GAURAV KAILAS WANKHEDE
5)VINAYAK KACHARDAS BAIRAGI
(72)**Name of Inventor :**
1)PRADEEP BAJRANG MANE
2)LEKHRAJ RAGHUNATH NERE
3)UTKARSH BHAIDAS PATIL
4)GAURAV KAILAS WANKHEDE
5)VINAYAK KACHARDAS BAIRAGI

(57) Abstract :
It is a period of rapid growth of cities from town to metro cities. According to development of city the city administration is failing to manage the few important things in regular lifestyle of citizens. Overflowed dustbin and uncollected solid waste has a tremendous effect on environment, though there are conventional ways of collecting solid waste still cities are facing problems of garbage. The present work on solid waste collection is improper, but it can be improved with the help of technological advancement. The invented system will take care of proper and right garbage level detection at proper time. The System informs the bin overflow detection with the help of sensing parameters such as Infrared and ultrasonic. The invention carries some additional feature of gas sensor in system, which detects excess of odour and smoke generated in bin. Corresponding information and position of dustbin is delivered to controller or substation by using GSM and GPS technology respectively. Whole system is battery operated and it charge time to time by waste collection vehicle. If the system fails due to rough handling supportive sensing parameters are added to the system. Advanced communication technologies are integrated with sensor to improve the waste collection operation.

No. of Pages : 10 No. of Claims : 9

(12) PATENT APPLICATION PUBLICATION
(21) Application No.4239/MUM/2014 A
(19) INDIA
(22) Date of filing of Application :31/12/2014
(43) Publication Date : 08/05/2015

(54) Title of the invention : SEX WORKER BEBI STATUE

(51) International classification	:A63H 33/00
(31) Priority Document No	:NA
(32) Priority Date	:NA
(33) Name of priority country	:NA
(86) International Application No	:NA
Filing Date	:NA
(87) International Publication No	: NA
(61) Patent of Addition to Application Number	:NA
Filing Date	:NA
(62) Divisional to Application Number	:NA
Filing Date	:NA

(71)**Name of Applicant :**
1)BORSE ARJUN TANAJI
Address of Applicant :NEAR GULWADI, NANDURBAR PIN-425412 (MAHARASHTRA) Maharashtra India
(72)**Name of Inventor :**
1)BORSE ARJUN TANAJI

(57) Abstract :
हर जीवन वर्ग के शरीर में नेचुरल सेक्सुअल की भावना बी कम जयादा पैदा होकर आदमी विचलित बेचैन होता है ! सेक्स की भूक मिटाने किसी को अवसर मिल पाटा तो किसी को मिलनही पाता अघ्ननि संस्कारहीन आदमी सेक्सुअल भवन के विचलित होने से वे गैर प्रकार कर भैटते हैं ! माल ट्रक ड्राइवर मिलिट्री सैनिक नौ सैनिक छ : माह घर से कोसो दूर रहते हैं ! वे सेक्स भवन के परेशान होने से वेश्यागमन करते हैं जिस से गुप्त से गुप्त एड्स जैसे बीमारी के शिकार बनते हैं ! सेक्सुअल भवन के परेशानी से बचने के लिए हम ने सेक्स वर्कर बेबी स्टेचू की खोज की हैं ! हम ने रबड़ प्लास्टिक से बानी लेटती हुई बेबी स्टेचू लिया उस के दोनों पैरों के बीच जगह बनाकर, वह रबड़ से बने फीमेल सेक्स मॉडल सलूशन से चिपका दिया ! इस तरह से रबड़ बेबी वर्कर स्टेचू बनाया गया !

No. of Pages : 5 No. of Claims : 2

(12) PATENT APPLICATION PUBLICATION
(21) Application No.2007/CHE/2015 A
(19) INDIA
(22) Date of filing of Application :19/04/2015
(43) Publication Date : 08/05/2015

(54) Title of the invention : MONITORING TOOL FOR MISTAKE PROOFING QUALITY SOFTWARE

(51) International classification :G06Q
(31) Priority Document No :NA
(32) Priority Date :NA
(33) Name of priority country :NA
(86) International Application No :NA
Filing Date :NA
(87) International Publication No : NA
(61) Patent of Addition to Application Number :NA
Filing Date :NA
(62) Divisional to Application Number :NA
Filing Date :NA

(71)**Name of Applicant :**
1)Kamalapuram Khaja Baseer
Address of Applicant :Research Scholar, JNIAS-JNTUA, Anantapuramu, Andhra Pradesh, India. Pin Code: 515002. Andhra Pradesh India
2)Ambati Rama Mohan Reddy
3)Chigarapalle Shoba Bindu
(72)**Name of Inventor :**
1)Kamalapuram Khaja Baseer
2)Ambati Rama Mohan Reddy
3)Chigarapalle Shoba Bindu

(57) Abstract :
The present invention relates to an monitoring tool for mistake proofing quality software. A new model is provided in which by injecting a mistake proofing technique called Poka-Yoke having the capability to identify the different types of errors made during the process of software development to achieve high quality expectations. To evaluate HQLS using PY, a tool called Poka-Yoke Integration in Software Engineering (PYISE) was considered that can help stakeholders of software development to quantify success of work in progress. The tool will act as defect reduction mechanism to provide software with quality from the early phases of the SDLC. Following invention is described in detail with the help of Figure 1 of the sheet 1 shows proposed model of HQLS-PY steps, Figure 2 of sheet 2 shows the diagram for QoS fitted into development lifecycle, Figure 3 of the sheet 3 shows the extension of step 6 of figure 1, phases of PYISE tool, Figure 4 of sheet 4 denotes the step PYISE tabulates six aspects and Figure 5 of the sheet 5 shows the average weightage with their corresponding review and recommendations.

No. of Pages : 23 No. of Claims : 7

(12) PATENT APPLICATION PUBLICATION
(21) Application No.1872/CHE/2014 A
(19) INDIA
(22) Date of filing of Application :09/04/2014
(43) Publication Date : 08/05/2015

(54) Title of the invention : COMPOSITION AND METHOD OF PRODUCING NANOFORMULATION OF WATER INSOLUBLE BIOACTIVES IN AQUEOUS BASE

(51) International classification	:a61k9/00	(71)**Name of Applicant :**
(31) Priority Document No	:NA	**1)NANOCEUTICA LABORATORIES PVT. LTD**
(32) Priority Date	:NA	Address of Applicant :28/1/11, B/C, Road No. 15, IDA
(33) Name of priority country	:NA	Nacharam, Uppal Mandal, Hyderabad 500076, India Andhra
(86) International Application No	:NA	Pradesh India
Filing Date	:NA	(72)**Name of Inventor :**
(87) International Publication No	: NA	**1)DEVRAJ, Rambhau**
(61) Patent of Addition to Application Number	:NA	**2)CHHATOI, Pranati**
Filing Date	:NA	**3)PARVATHABHATLA, Naga Hemanth Kumar**
(62) Divisional to Application Number	:NA	**4)DESHMUKH, Anand, Vasant**
Filing Date	:NA	**5)CHINTABHATLA, Krishna Kaushik**

(57) Abstract :
Exemplary embodiment of the present disclosure are directed towards a stable nanodispersion comprising an aqueous dispersion medium, a dispersed phase, a surface active agent and optionally, an additive, wherein the aqueous dispersion medium comprises of a nanodispersion stabilizing vehicle base component,wherein the nanodispersion stabilizing vehicle base component improves long term physical stability of the nanodispersion with or without particle size reduction, wherein the dispersed phase comprises of a bioactive compound and wherein the bioactive compound is lipophilic and hydrophobic. Another exemplary embodiment of the present disclosure is directed towards a method of preparation of such stable nanodispersion.

No. of Pages : 48 No. of Claims : 21

(12) PATENT APPLICATION PUBLICATION
(21) Application No.2003/CHE/2015 A
(19) INDIA
(22) Date of filing of Application :18/04/2015
(43) Publication Date : 08/05/2015

(54) Title of the invention : ANTICANCER ACTIVITY OF FERMENTED SKIN OF ALLIUM CEPA

(51) International classification :A61K36/00
(31) Priority Document No :NA
(32) Priority Date :NA
(33) Name of priority country :NA
(86) International Application No :NA
Filing Date :NA
(87) International Publication No : NA
(61) Patent of Addition to Application Number :NA
Filing Date :NA
(62) Divisional to Application Number :NA
Filing Date :NA

(71)**Name of Applicant :**
1)Dr. MEENA VANGALAPATI
Address of Applicant :Associate Professor, Center for Biotechnology, Department of Chemical Engineering, AUCE (A), Andhra University, Visakhapatnam, Andhra Pradesh, India. Andhra Pradesh India
2)MANASA MACHAVARAPU
(72)**Name of Inventor :**
1)Dr. MEENA VANGALAPATI
2)MANASA MACHAVARAPU

(57) Abstract :
An exemplary embodiment of the present disclosure is directed towards a method for fermenting an onion (Allium cepa) skin with Aspergillus kawachii. Another exemplary embodiment of the present disclosure is directed towards a composition comprising fermented onion skin extract for inhibiting cancer cell growth and a method for preparing that composition. Quercetin is one of the main component of Allium cepa species. Fermentation of the onion skin enhances the quercetin content. The quercetin extracted and purified from the fermented onion skin extract inhibits the cancer cell growth.

No. of Pages : 14 No. of Claims : 10

(12) PATENT APPLICATION PUBLICATION
(21) Application No.5128/CHE/2014 A
(19) INDIA
(22) Date of filing of Application :13/10/2014
(43) Publication Date : 08/05/2015

(54) Title of the invention : MAGNETO DIELECTRIC PRASEODYMIUM CERIUM DOPED MAGNESIUM FERRITE SUBSTRATE FOR A NOVEL MICROSTRIP PATCH ANTENNA TO FUNCTION AT GHZ RANGE

(51) International classification :H01Q
(31) Priority Document No :NA
(32) Priority Date :NA
(33) Name of priority country :NA
(86) International Application No :NA
Filing Date :NA
(87) International Publication No : NA
(61) Patent of Addition to Application Number :NA
Filing Date :NA
(62) Divisional to Application Number :NA
Filing Date :NA

(71)**Name of Applicant :**
1)S.M. SEENI MOHAIDEEN, CEO
Address of Applicant :CEO, SETHU INSTITUTE OF TECHNOLOGY, PULLOOR, KARIAPATTI - 626 115, VIRUDHYNAGAR DIST Tamil Nadu India
(72)**Name of Inventor :**
1)S.M. SEENI MOHAIDEEN, CEO

(57) Abstract :
A MIMO antenna includes a Nano Meta dielectric substrate, and a main antenna component and a metal piece disposed on the dielectric substrate. The main antenna component includes a feed-in portion for feeding With a radio frequency signal, a first conductor arm connected to the feed-in portion and adjacent to a first side edge of the dielectric substrate, a second conductor arm connected to the feed-in portion and having a length shorter than that of the first conductor arm, a third conductor arm connected to the feed-in portion, a fourth conductor arm extending along the third conductor arm, and a grounding portion adjacent to the feed-in portion. The metal piece is disposed at the first side edge and connected to the fourth conductor arm, resonates and couples With the first conductor arm to form a first radiator section, and cooperates With the fourth conductor arm to form a second radiator section. To design and construct the Micro Strip Patch antenna (MSPA) with the improved return loss was -27.904 dB, gain -31.98dB, directivity was 6.84dB.

No. of Pages : 14 No. of Claims : 10

(12) PATENT APPLICATION PUBLICATION
(21) Application No.1994/CHE/2015 A
(19) INDIA
(22) Date of filing of Application :17/04/2015
(43) Publication Date : 08/05/2015

(54) Title of the invention : RESTING AND FLOATING HOUSE RESISTANT TO FLOODS AND EARTHQUAKE

(51) International classification :E04H
(31) Priority Document No :NA
(32) Priority Date :NA
(33) Name of priority country :NA
(86) International Application No :NA
Filing Date :NA
(87) International Publication No : NA
(61) Patent of Addition to Application Number :NA
Filing Date :NA
(62) Divisional to Application Number :NA
Filing Date :NA

(71)**Name of Applicant :**
1)Dr.Seeram Madhuri
Address of Applicant :Assistant Professor, Department of Civil Engineering, University College of Engineering Kakinada, JNTU Kakinada, Kakinada, Andhra Pradesh, India Andhra Pradesh India
(72)**Name of Inventor :**
1)Dr.Seeram Madhuri
2)B. Praveen

(57) Abstract :
Exemplary embodiments of the present disclosure are directed towards a flood and earthquake resistant resting and floating house 200 comprising a substructure 202; a superstructure 201; and an energy absorbing system 301, wherein the substructure 202 comprises of at least one of a buoyancy chamber 205; a plurality of a longitudinal beam 203; and a plurality of a cross beam 204. The flood and earthquake resistant resting and floating house 200 is configured to be a floating structure during floods and to be a resting structure, under normal conditions, resting on the energy absorbing system 301. The energy absorbing system 301 of the buoyant house 200 is configured to absorb energy released during earthquakes thus protecting it from the earthquake tremors.

No. of Pages : 14 No. of Claims : 5

Publication After 18 Months:

The following Patent Applications have been published under Section 11A (3) of The Patents (Amendment) Act, 2005. Any Person may file representation by way of opposition to the Controller of Patents at the appropriate office against the grant of the patent in the prescribed manner under section 25(1) of the Patents (Amendment) Act, 2005 read with the rule 55 of The Patents (Amendment) Rules, 2006:

(12) PATENT APPLICATION PUBLICATION

(21) Application No.102/DEL/2012 A

(19) INDIA

(22) Date of filing of Application :11/01/2012

(43) Publication Date : 08/05/2015

(54) Title of the invention : NOVEL FORMULATION FOR NASH (NONALCOHOLIC STEATOHEPATITIS)

(51) International classification	:C07C	(71)**Name of Applicant :**
(31) Priority Document No	:NA	**1)AMITY UNIVERSITY**
(32) Priority Date	:NA	Address of Applicant :AMITY UNIVERSITY CAMPUS,
(33) Name of priority country	:NA	SECTOR-125, NOIDA, UP,INDIA Uttar Pradesh India
(86) International Application No	:NA	(72)**Name of Inventor :**
Filing Date	:NA	**1)DEEPSHIKHA PANDE KATARE**
(87) International Publication No	:NA	**2)KUMUD BALA**
(61) Patent of Addition to Application Number	:NA	**3)HARSHA KHARKWAL**
Filing Date	:NA	
(62) Divisional to Application Number	:NA	
Filing Date	:NA	

(57) Abstract :
The present invention relates to a novel formulation for Nonalcoholic steatohepatitis or NASH comprising a novel polysaccharide i.e. partially hydrolyzed tora gum (PHTG) which leads to enhanced absorption and sustained release of the drug Diadzein along with inulin. PHTG not only increases the drug absorption but also reduces scarring of the liver, thus preventing liver damage.

No. of Pages : 21 No. of Claims : 9

(12) PATENT APPLICATION PUBLICATION
(21) Application No.112/DEL/2012 A
(19) INDIA
(22) Date of filing of Application :12/01/2012
(43) Publication Date : 08/05/2015

(54) Title of the invention : IMPROVED ANCILLARY DEVICE FOR ENHANCING ENGINE FUEL COMBUSTION EFFICIENCY

(51) International classification :B21J
(31) Priority Document No :NA
(32) Priority Date :NA
(33) Name of priority country :NA
(86) International Application No :NA
Filing Date :NA
(87) International Publication No :NA
(61) Patent of Addition to Application Number :NA
Filing Date :NA
(62) Divisional to Application Number :NA
Filing Date :NA

(71)**Name of Applicant :**
1)WEN-LO CHEN
Address of Applicant :4F, NO.18, SEC. 6, HSIN YI RD., TAIPEI CITY, TAIWAN, R.O.C. Taiwan
(72)**Name of Inventor :**
1)WEN-LO CHEN

(57) Abstract :
An ancillary device for enhancing engine fuel combustion efficiency includes a pure water replenishable electrolytic bath and a hydrogen-oxygen fuel cell installed on an automobile. The electrolytic bath and the hydrogen-oxygen fuel cell are electrically connection with an automobile battery. The battery supplies electrical power to the electrolytic bath to electrolyze water replenished thereto into hydrogen and oxygen, which are fed through a first gas supply tube into an automobile fuel conduit to mix with fuel for being supplied with the fuel to an engine cylinder. The hydrogen and oxygen are also supplied through a second gas supply tube to the hydrogen-oxygen fuel cell for chemical reaction that generates electrical power to charge the battery. The chemical reaction of the hydrogen-oxygen fuel cell generates a product of pure water that is supplied through a pure water tube to the electrolytic bath for circulative and cyclic use for electrolysis.

No. of Pages : 13 No. of Claims : 2

(12) PATENT APPLICATION PUBLICATION
(19) INDIA
(22) Date of filing of Application :10/01/2012
(21) Application No.274/DELNP/2012 A
(43) Publication Date : 08/05/2015

(54) Title of the invention : HEAT-EXCHANGER CONFIGURATION

(51) International classification :F28D 9/00
(31) Priority Document No :NA
(32) Priority Date :NA
(33) Name of priority country :NA
(86) International Application No :PCT/CA2010/000990
Filing Date :23/06/2010
(87) International Publication No :WO 2010/148515
(61) Patent of Addition to Application Number :NA
Filing Date :NA
(62) Divisional to Application Number :NA
Filing Date :NA

(71)**Name of Applicant :**
1)VALORBEC SOCIETE EN COMMANDITE, REPRESENTEE PAR GESTION VALEO S.E.C.
Address of Applicant :BUREAU 230 550, RUE SHERBROOKE OUEST MONTREAL, QUEBEC H3A 1B9 CANADA
(72)**Name of Inventor :**
1)VATISTAS, GEORGIOS H.
2)FAYED, MOHAMED

(57) Abstract :
A heat exchanger comprises a first plate. A second plate is spaced apart from the first plate and defines a first gap between inner surfaces of the first plate and the second plate in which a first fluid circulates. A major portion of the first gap is free of obstructions. A second fluid contacts an outer surface of the first or second plate for heat exchange with the first fluid. A first peripheral wall on the periphery of the first gap has a curved profile inside the first gap. At least one inlet is radially positioned with respect to the first gap and injects the first fluid in the gap. At least one outlet is centrally positioned in one of the first and the second plate to enable the first fluid to exit the first gap. The first fluid circulates in a swirling flow in the major portion of the first gap.

No. of Pages : 19 No. of Claims : 16

(12) PATENT APPLICATION PUBLICATION
(21) Application No.280/DELNP/2012 A
(19) INDIA
(22) Date of filing of Application :10/01/2012
(43) Publication Date : 08/05/2015

(54) Title of the invention : STIRLING CYCLE TRANSDUCER FOR CONVERTING BETWEEN THERMAL ENERGY AND MECHANICAL ENERGY

(51) International classification :F02G 1/043
(31) Priority Document No :61/213,760
(32) Priority Date :10/07/2009
(33) Name of priority country :U.S.A.
(86) International Application No :PCT/CA2010/001092
Filing Date :12/07/2010
(87) International Publication No :WO 2011/003207
(61) Patent of Addition to Application Number :NA
Filing Date :NA
(62) Divisional to Application Number :NA
Filing Date :NA

(71)**Name of Applicant :**
1)ETALIM INC.
Address of Applicant :62 WEST 8TH AVENUE, SUITE #400 VANCOUVER, BRITISH COLUMBIA V5Y 1M7 CANADA
(72)**Name of Inventor :**
1)STEINER, THOMAS, WALTER
2)MEDARD DE CHARDON, BRIAC
3)KANEMARU, TAKAO

(57) Abstract :
The apparatus includes a housing, a compression chamber disposed in the housing and having at least a first interface operable to vary a volume of the compression chamber, an expansion chamber disposed in the housing and having a second interface operable to vary a volume of at least the expansion chamber, and a thermal regenerator in fluid communication with each of the compression chamber and the expansion chamber. The thermal regenerator is operable to alternatively receive thermal energy from gas flowing in a first direction through the regenerator and to deliver the thermal energy to gas flowing in a direction opposite to the first direction through the regenerator. The compression chamber, the expansion chamber, and the regenerator together define a working volume for containing a pressurized working gas. Each of the first and second interfaces are configured for reciprocating motion in a direction aligned with a transducer axis, the reciprocating motion being operable to cause a periodic exchange of working gas between the expansion and the compression chambers. In one aspect, at least one of the first and second interfaces includes a resilient diaphragm, and a cylindrical tube spring coupled between the diaphragm and the housing, the tube spring being configured to elastically deform in a direction generally aligned with the transducer axis in response to forces imparted on the tube spring by the diaphragm to cause the at least one of the first and second interfaces to have a desired natural frequency. In another aspect the apparatus includes a first heat exchanger in communication with the expansion chamber, a second heat exchanger in communication with the compression chamber, the thermal regenerator is disposed between the first and second heat exchangers, and each of the first and second heat exchangers are peripherally disposed within the housing with respect to the transducer axis and configured to receive working gas flowing to or from the respective chambers and to redirect the working gas flow through the regenerator.

No. of Pages : 96 No. of Claims : 70

(12) PATENT APPLICATION PUBLICATION
(19) INDIA
(22) Date of filing of Application :11/01/2012
(21) Application No.108/DEL/2012 A
(43) Publication Date : 08/05/2015

(54) Title of the invention : CONTROLLERS FOR STATIC ENERGY SUPPLY UNITS

(51) International classification :H01R
(31) Priority Document No :EP 11000293.8
(32) Priority Date :15/01/2011
(33) Name of priority country :EPO
(86) International Application No :NA
Filing Date :NA
(87) International Publication No :NA
(61) Patent of Addition to Application Number :NA
Filing Date :NA
(62) Divisional to Application Number :NA
Filing Date :NA

(71)**Name of Applicant :**
1)CONVERTEAM TECHNOLOGY LIMITED
Address of Applicant :BOUGHTON ROAD RUGBY, WARWICKSHIRE CV21 1BU UNITED KINGDOM
(72)**Name of Inventor :**
1)LEWIS, ERIC ANTHONY

(57) Abstract :
A static energy supply unit (2) has an energy store (4) connected to an ac supply network (SN) by a power converter (8). A unit controller (20) for the static energy supply unit (2) includes an amplitude controller (26), a phase controller (30) and a frequency controller (34). These measure and storing respective voltage characteristics of the ac voltage(s) of the ac supply network and provide output signals indicative of the voltage characteristics for an operating condition of the ac supply network (SN). A signal generator (22) for generating a simulated output voltage signal (24a, 24b, 24c) for each phase of the ac supply network (SN) is provided. The simulated output voltage signal(s) (24a, 24b, 24c) have voltage characteristics derived from the amplitude, phase and frequency output signals (28, 32, 36), respectively. A comparator is used to compare the simulated output voltage signal (24a, 24b, 24c) for each phase and a measured ac voltage for a corresponding phase of the ac supply network (SN). The controller (20) controls the operation of the power converter (8) to vary the amount of power that is supplied to the ac supply network (SN) from the energy store (4) based on the comparison of the simulated output voltage signal(s) (24a, 24b, 24c) and the measured ac voltage(s).

No. of Pages : 29 No. of Claims : 20

(12) PATENT APPLICATION PUBLICATION
(19) INDIA
(22) Date of filing of Application :10/01/2012
(21) Application No.264/DELNP/2012 A
(43) Publication Date : 08/05/2015

(54) Title of the invention : IMPROVEMENTS IN AND RELATING TO COLON CLEANSING COMPOSITIONS

(51) International classification :A61K 9/00
(31) Priority Document No :0912487.6
(32) Priority Date :17/07/2009
(33) Name of priority country :U.K.
(86) International Application No :PCT/GB2010/001362
Filing Date :16/07/2010
(87) International Publication No :WO 2011/007153
(61) Patent of Addition to Application Number :NA
Filing Date :NA
(62) Divisional to Application Number :NA
Filing Date :NA

(71)**Name of Applicant :**
1)NORGINE BV
Address of Applicant :HOGEHILWEG 7, NL-1101 CA, AMSTERDAM ZUID-OOST, THE NETHERLANDS
(72)**Name of Inventor :**
1)ATTWELL, MARK
2)COCKETT, ALASDAIR
3)COX, IAN
4)GRANGER, JANET
5)OZA, PANKAJ
6)PADFIELD, DAWN
7)PADFIELD, NICK

(57) Abstract :
The invention provides a dry composition for admixture with water, wherein the composition is optionally presented in two or more parts and comprises, per litre of solution to be made, the following components: (a) 85 to 115 g polyethylene glycol (PEG) having an average molecular weight of 2500 to 4500; (b) 6 to 9 g sodium sulfate; (c) 2 to 3 g sodium chloride; (d) 0.5 to 1.5 g potassium chloride; (e) 5 to 15 g of an organic acid component; and (f) orange flavouring. Also provided are solutions, kits, unit doses and methods that comprise use the compositions.

No. of Pages : 44 No. of Claims : 30

(12) PATENT APPLICATION PUBLICATION
(19) INDIA
(22) Date of filing of Application :10/01/2012
(21) Application No.281/DELNP/2012 A
(43) Publication Date : 08/05/2015

(54) Title of the invention : NAVIGATION DEVICE AND METHOD FOR TIME-DEPENDENT ROUTE CALCULATION

(51) International classification :G08G 1/096
(31) Priority Document No :61/213,746
(32) Priority Date :09/07/2009
(33) Name of priority country :U.S.A.
(86) International Application No :PCT/EP2010/059944
Filing Date :09/07/2010
(87) International Publication No :WO 2011/004026
(61) Patent of Addition to Application Number :NA
Filing Date :NA
(62) Divisional to Application Number :NA
Filing Date :NA

(71)**Name of Applicant :**
1)TOMTOM INTERNATIONAL B.V.
Address of Applicant :REMBRANDTPLEIN 35, NL-1017 CT AMSTERDAM, NETHERLANDS
2)TOMTOM DEVELOPMENT GERMANY GMBH
(72)**Name of Inventor :**
1)SCHILLING, HEIKO
2)GAWRILOW, EWGENIJ
3)HILGER, MORITZ
4)PROFOUS, ANDREAS
5)WERBER, JURGEN
6)TERTOOLEN, SIMONE

(57) Abstract :
This invention concerns a method of determining a route using map data comprising a plurality of navigable paths, the map data divided into a plurality of regions. The method comprises using at least one processing apparatus to: receive an origin and a destination on the map data and a travel time, determine a route from the origin to the destination using the map data and minimum cost data that identifies minimum cost paths between regions of the map data. The minimum cost data identifies more than one minimum cost path between a pair of the regions if different minimum cost paths exist between the pair of regions at different times and determining a route comprises identifying from the minimum cost paths for the pair of regions comprising the origin and destination, the minimum cost path having a lowest cost at the travel time.

No. of Pages : 111 No. of Claims : 26

(12) PATENT APPLICATION PUBLICATION
(19) INDIA
(22) Date of filing of Application :11/01/2012
(21) Application No.300/DELNP/2012 A
(43) Publication Date : 08/05/2015

(54) Title of the invention : GEARED DRIVE UNIT

(51) International classification :E05F 15/16
(31) Priority Document No :102009029530.5
(32) Priority Date :17/09/2009
(33) Name of priority country :Germany
(86) International Application No :PCT/EP2010/060625
Filing Date :22/07/2010
(87) International Publication No :WO 2011/032759
(61) Patent of Addition to Application Number :NA
Filing Date :NA
(62) Divisional to Application Number :NA
Filing Date :NA

(71)**Name of Applicant :**
1)ROBERT BOSCH GMBH
Address of Applicant :POSTFACH 30 02 20, 70442 STUTTGART, GERMANY
(72)**Name of Inventor :**
1)MILI, TAREK
2)LAUK, DETLEF

(57) Abstract :
Described herein is a geared drive unit (10), particularly a window-lifter drive. The geared drive unit (10) includes a drive side gear element (11) rotatably mounted in a gear housing (15), wherein the gear element (11) transmits a driving torque to at least one driving element (25, 26) of an output side coupling element (20); and a load torque block for blocking a torque initiated from the output side coupling element (20) via the at least one driving element (25, 26). Further, the load torque block has a blocking element (42), in the form of a wrap spring, which interacts with an element that is mounted in the gear housing (15) in a non-rotatably manner for blocking the torque. According to the present subject matter, the non-rotatably mounted element is simultaneously formed as a radial bearing for the drive side gear element (11).

No. of Pages : 11 No. of Claims : 10

(12) PATENT APPLICATION PUBLICATION
(19) INDIA
(22) Date of filing of Application :10/01/2012
(21) Application No.288/DELNP/2012 A
(43) Publication Date : 08/05/2015

(54) Title of the invention : HETEROGENEOUS HYDROGEN-CATALYST POWER SYSTEM

(51) International classification :H01M 14/00
(31) Priority Document No :61/232,291
(32) Priority Date :07/08/2009
(33) Name of priority country :U.S.A.
(86) International Application No :PCT/US2010/027828
Filing Date :18/03/2010
(87) International Publication No :WO 2011/016878
(61) Patent of Addition to Application Number :NA
Filing Date :NA
(62) Divisional to Application Number :NA
Filing Date :NA

(71)**Name of Applicant :**
1)BLACKLIGHT POWER INC.
Address of Applicant :493 OLD TRENTON ROAD, CRANBURY, NEW JERSEY 08512, USA
(72)**Name of Inventor :**
1)MILLS RANDELL LEE

(57) Abstract :
A power source and hydride reactor is provided that powers a power system comprising (i) a reaction cell for the catalysis of atomic hydrogen to form hydrinos, (ii) a chemical fuel mixture comprising at least two components chosen from: a source of catalyst or catalyst; a source of atomic hydrogen or atomic hydrogen; reactants to form the source of catalyst or catalyst and a source of atomic hydrogen or atomic hydrogen; one or more reactants to initiate the catalysis of atomic hydrogen; and a support to enable the catalysis, (iii) thermal systems for reversing an exchange reaction to thermally regenerate the fuel from the reaction products, (iv) a heat sink that accepts the heat from the power-producing reactions, and (v) a power conversion system. In an embodiment, the catalysis reaction is activated or initiated and propagated by one or more other chemical reactions such as a hydride-halide exchange reaction between a metal of the catalyst and another metal. These reactions are thermally reversible by the removal of metal vapor in the reverse exchange. The hydrino reactions are maintained and regenerated in a batch mode using thermally- coupled multi-cells arranged in bundles wherein cells in the power-production phase of the cycle heat cells in the regeneration phase. In this intermittent cell power design, the thermal power is statistically constant as the cell number becomes large, or the cells cycle is controlled to achieve steady power. In another power system embodiment, the hydrino reactions are maintained and regenerated continuously in each cell wherein heat from the power production phase of a thermally reversible cycle provides the energy for regeneration of the initial reactants from the products. Since the reactants undergo both modes simultaneously in each cell, the thermal power output from each cell is constant. Thermal power is converted to electrical power by a heat engine exploiting a cycle such as a Rankine, Brayton, Stirling, or steam-engine cycle. In another embodiment, the exchange reactions are constituted in half-cell reactions as the basis of a unique fuel cell wherein direct electrical power is developed with energy released by the reaction of hydrogen to form hydrinos.

No. of Pages : 275 No. of Claims : 30

(12) PATENT APPLICATION PUBLICATION
(19) INDIA
(22) Date of filing of Application :15/04/2014
(21) Application No.3005/DELNP/2014 A
(43) Publication Date : 08/05/2015

(54) Title of the invention : AFFENADENOVIRUS (GORILLA) OR ADENOVIRAL VECTORS AND METHODS OF USE

(51) International classification :C07K14/005,C12N15/86
(31) Priority Document No :61/543638
(32) Priority Date :05/10/2011
(33) Name of priority country :U.S.A.
(86) International Application No :PCT/US2012/058956
Filing Date :05/10/2012
(87) International Publication No :WO 2013/052799
(61) Patent of Addition to Application Number :NA
Filing Date :NA
(62) Divisional to Application Number :NA
Filing Date :NA

(71)**Name of Applicant :**
1)GENVEC INC.
Address of Applicant :910 Clopper Road Suite 220N Gaithersburg Maryland 20878 U.S.A.
(72)**Name of Inventor :**
1)GALL Jason G.D.
2)MCVEY Duncan
3)BROUGH Douglas E.

(57) Abstract :
The invention provides an adenovirus or adenoviral vector characterized by comprising one or more particular nucleic acid sequences or one or more particular amino acid sequences or portions thereof pertaining to for example an adenoviral pIX protein DNA polymerase protein penton protein hexon protein and/or fiber protein.

No. of Pages : 161 No. of Claims : 96

(12) PATENT APPLICATION PUBLICATION
(19) INDIA
(22) Date of filing of Application :15/04/2014
(21) Application No.3007/DELNP/2014 A
(43) Publication Date : 08/05/2015

(54) Title of the invention : PROCESSES FOR PREPARING ALUMINA AND VARIOUS OTHER PRODUCTS

(51) International classification :C01F7/30,C01F7/02,C01F7/56
(31) Priority Document No :61/535435
(32) Priority Date :16/09/2011
(33) Name of priority country :U.S.A.
(86) International Application No :PCT/CA2012/000871
Filing Date :17/09/2012
(87) International Publication No :WO 2013/037054
(61) Patent of Addition to Application Number :NA
Filing Date :NA
(62) Divisional to Application Number :NA
Filing Date :NA

(71)**Name of Applicant :**
1)ORBITE ALUMINAE INC.
Address of Applicant :6505 route Transcanadienne Bureau 610 Saint Laurent Qubec H4T 1S3 Canada
(72)**Name of Inventor :**
1)BOUDREAULT Richard
2)FOURNIER Joel
3)PRIMEAU Denis
4)LABRECQUE GILBERT Marie Maxime

(57) Abstract :
There are provided processes for preparing alumina. These processes can comprise leaching an aluminum containing material with HCl so as to obtain a leachate comprising aluminum ions and a solid and separating said solid from said leachate; reacting said leachate with HCl so as to obtain a liquid and a precipitate comprising said aluminum ions in the form of AlCl and separating said precipitate from said liquid; and heating said precipitate under conditions effective for converting AlCl into AlO and optionally recovering gaseous HCl so produced. These processes can also be used for preparing various other products such as hematite MgO silica and oxides of various metals sulphates and chlorides of various metals as well as rare earth elements rare metals and aluminum.

No. of Pages : 110 No. of Claims : 274

(12) PATENT APPLICATION PUBLICATION
(21) Application No.100/DEL/2012 A
(19) INDIA
(22) Date of filing of Application :11/01/2012
(43) Publication Date : 08/05/2015

(54) Title of the invention : IMPROVED REAL TIME ANALYSIS FOR SECURING WEB SERVER

(51) International classification :G06K
(31) Priority Document No :NA
(32) Priority Date :NA
(33) Name of priority country :NA
(86) International Application No :NA
Filing Date :NA
(87) International Publication No :NA
(61) Patent of Addition to Application Number :NA
Filing Date :NA
(62) Divisional to Application Number :NA
Filing Date :NA

(71)**Name of Applicant :**
1)AMITY UNIVERSITY
Address of Applicant :AMITY UNIVERSITY CAMPUS, SECTOR-125, NOIDA-201303, UP, INDIA Uttar Pradesh India
(72)**Name of Inventor :**
1)TANYA SINGH
2)SEEMA VERMA

(57) Abstract :
Improved real time analysis of packets for securing web server The present invention relates to an improved system and method for analysis of certain strings that identify an attack against a web server. The client honeynet architecture deployed offers simulated web based applications in order to detect, monitor and analyse any malicious activity. The amalgamation of process of data filtering and fast analysis of packets reduces the level of false alarms from 60% to 28%.

No. of Pages : 12 No. of Claims : 7

(12) PATENT APPLICATION PUBLICATION
(19) INDIA
(22) Date of filing of Application :12/01/2012
(21) Application No.118/DEL/2012 A
(43) Publication Date : 08/05/2015

(54) Title of the invention : SWITCH WITH ROTATABLE KNOB

(51) International classification :H01S
(31) Priority Document No :102011002862.5
(32) Priority Date :19/01/2011
(33) Name of priority country :Germany
(86) International Application No :NA
Filing Date :NA
(87) International Publication No :NA
(61) Patent of Addition to Application Number :NA
Filing Date :NA
(62) Divisional to Application Number :NA
Filing Date :NA

(71)**Name of Applicant :**
1)SIEMENS AKTIENGESELLSCHAFT
Address of Applicant :WITTELSBACHERPLATZ 2, 80333 MUNCHEN, GERMANY
(72)**Name of Inventor :**
1)BAUMANN; MATHIAS
2)CZEKAY; STEPHAN

(57) Abstract :
A device with a rotatable knob with a least two knob positions is disclosed, with the device comprising a number of light sources of different colors corresponding to the number of knob positions and a light-conducting channel being embodied within the knob between a first side of the knob and a second side of the knob, with the light sources being arranged relative to the first side of the knob so that, for each knob position the light of only one light source is coupled into the light-conducting chan¬nel, so that the knob position is visually displayed by the color of the respective light source on the second side of the knob.

No. of Pages : 12 No. of Claims : 10

(12) PATENT APPLICATION PUBLICATION
(19) INDIA
(22) Date of filing of Application :11/01/2012
(21) Application No.295/DELNP/2012 A
(43) Publication Date : 08/05/2015

(54) Title of the invention : DEFLECTION CORRECTION DEVICE FOR RAM

(51) International classification :B23Q 1/38
(31) Priority Document No :NA
(32) Priority Date :NA
(33) Name of priority country :NA
(86) International Application No :PCT/JP2009/071754
Filing Date :28/12/2009
(87) International Publication No :WO 2011/080820
(61) Patent of Addition to Application Number :NA
Filing Date :NA
(62) Divisional to Application Number :NA
Filing Date :NA

(71)**Name of Applicant :**
1)MITSUBISHI HEAVY INDUSTRIES , LTD.
Address of Applicant :16-5, KONAN 2-CHOME, MINATO-KU, TOKYO 1088215,JAPAN
(72)**Name of Inventor :**
1)TAKUMI HORI
2)SATOSHI FURUTATE
3)HIROYUKI DOMARU

(57) Abstract :
It is intended to provide a machining tool provided with a ram, which has a simple structure and an inexpensive device cost, and is capable of correcting a deflection of a tip of a main shaft unit caused by extending the ram. A deflection correction device for a ram 1 in a machining tool which is provided with a saddle 13 moving vertically along a guide of a column 14 and the ram 1 housing a main shaft unit 15 and being fitted in the saddle 13 slidably in a horizontal direction. The device may include a plurality of hydrostatic bearings 2a via which the saddle 13 is supported by the column 14 in a longitudinal direction of the column 14, and a control unit 10 which controls a hydraulic pressure of the hydrostatic bearing 2a in accordance with a vertical displacement of the ram 1 to maintain a straightness of the ram 1 in a direction of a main shaft of the ram 1 so as to correct a misalignment of the main shaft unit 15 by an inclination of the saddle 13 caused by controlling the hydraulic pressure.

No. of Pages : 35 No. of Claims : 8

(12) PATENT APPLICATION PUBLICATION
(19) INDIA
(22) Date of filing of Application :16/04/2014
(21) Application No.3014/DELNP/2014 A
(43) Publication Date : 08/05/2015

(54) Title of the invention : ANISOTROPIC PROCESSING OF LASER SPECKLE IMAGES

(51) International classification :A61B5/06,A61B5/00
(31) Priority Document No :61/539042
(32) Priority Date :26/09/2011
(33) Name of priority country :U.S.A.
(86) International Application No :PCT/US2012/057221
Filing Date :26/09/2012
(87) International Publication No :WO 2013/049123
(61) Patent of Addition to Application Number :NA
Filing Date :NA
(62) Divisional to Application Number :NA
Filing Date :NA

(71)**Name of Applicant :**
1)THE JOHNS HOPKINS UNIVERSITY
Address of Applicant :3400 North Charles Street Baltimore Maryland 21218 U.S.A.
(72)**Name of Inventor :**
1)REGE Abhishek
2)SENARATHNA Janaka
3)THAKOR Nitish V.

(57) Abstract :
An embodiment in accordance with the present invention provides a system and method for imaging living tissue and processing laser speckle data anisotropically to calculate laser speckle contrast preferentially along the direction of blood flow. In the present invention raw laser speckle images are obtained and processed resulting in the anisotropic laser speckle images The system and method involve the determination of the direction of blood flow for every pixel within the region of interest (primary pixel) and subsequent extraction of a set of secondary pixels in the spatio temporal neighborhood of the primary pixel that is anisotropic in the direction of blood flow. Speckle contrast is then calculated for every primary pixel as the ratio of standard deviation and mean of all secondary pixels in this anisotropic neighborhood and collectively plotted using a suitable color mapping scheme to obtain an anisotropic laser speckle contrast image of the region of interest.

No. of Pages : 40 No. of Claims : 31

(12) PATENT APPLICATION PUBLICATION
(21) Application No.104/DEL/2012 A
(19) INDIA
(22) Date of filing of Application :11/01/2012
(43) Publication Date : 08/05/2015

(54) Title of the invention : WATER KING BRIGHT FUTURE ELECTRO-ENERGY POWER HOUSE PROJECT

(51) International classification :B25G
(31) Priority Document No :NA
(32) Priority Date :NA
(33) Name of priority country :NA
(86) International Application No :NA
Filing Date :NA
(87) International Publication No :NA
(61) Patent of Addition to Application Number :NA
Filing Date :NA
(62) Divisional to Application Number :NA
Filing Date :NA

(71)**Name of Applicant :**
1)KASHI RAM
Address of Applicant :S/O LATE SH. PALA RAM VILLAGE & P.O., DERA PAROL, TEHSIL BHORANJ, DISTT. HAMIRPUR (H.P.)-PIN-177501 (INDIA). Himachal Pradesh India
2)RAJ KUMAR
(72)**Name of Inventor :**
1)SH. KASHI RAM
2)RAJ KUMAR

(57) Abstract :
The present invention consist of two parts i.e. one part illustrates an electricity generation system that utilizes hydrostatic energy of water stored in top water storage synthetic tank no 1 that may be either located separately at an height of about 5meter from ground with provision of keeping complete water level of 14mm for lkw plant output and complete water level of 51mm maintained in tank for 500kw plant output respectively. The said power generating system utilizes another tank no2 which is located beneath tankl of identical capacity to receive used water issued from tankl after striking blades of specially designed turbine fitted in between tankl & tank2. This power project is equipped with all necessary ancillaries for two different applications i.e.(a) One with Tankl & Tank2 and specially designed turbine (item no 1) as shown in accompanying drawing of Figl while another application of specially deigned turbine in form of Water Boat Electro- Power Generating System wherein same kind of special turbine structure as in (item 1) also shown in Fig2 has been used along with complete water inlet valve control mechanism, power generating mechanism like set of alternators, turbine fitted on axle, axle end fitted bearings, gearbox assembly, belt pulley arrangement for driving motor-alternators assembly, DC supply for powering DC motor that starts the working of main turbine to cause initial motion to alternator, entire wiring system for the power house, water pumping mechanism from tank2 to back to tankl for recycling wasted/used water of earlier stage for best utilization of resources and make an economic operation of plant for both Figl & Fig2 drives.

No. of Pages : 14 No. of Claims : 5

(12) PATENT APPLICATION PUBLICATION
(19) INDIA
(22) Date of filing of Application :11/01/2012
(21) Application No.106/DEL/2012 A
(43) Publication Date : 08/05/2015

(54) Title of the invention : FILTER FOR ARC SOURCE

(51) International classification :H01S
(31) Priority Document No :13/020,290
(32) Priority Date :03/02/2011
(33) Name of priority country :U.S.A.
(86) International Application No :NA
Filing Date :NA
(87) International Publication No :NA
(61) Patent of Addition to Application Number :NA
Filing Date :NA
(62) Divisional to Application Number :NA
Filing Date :NA

(71)**Name of Applicant :**
1)VAPOR TECHNOLOGIES INC.
Address of Applicant :6400 DRY CREEK PARKWAY LONGMONT, COLORADO 80503 UNITED STATES OF AMERICA
(72)**Name of Inventor :**
1)BRONDUM, KLAUS

(57) Abstract :
An arc source filter is disposed between an arc cathode and a substrate in a vacuum arc deposition system. The filter includes a plurality of duct elements that surround the arc source. The duct elements have sufficient spatial dimensions to block particles. In addition, the duct elements have electrical and magnetic properties that are conducive for plasma transmission through the filter. On passing through the filter, the highly ionized arc plasma is essentially rid of particles making a source plasma for reacted as well as un-reacted coatings characterized by high density and near defect free quality. The design allows for flexibility in terms of filtering degree, length of coating zone as well as choice of arc source.

No. of Pages : 28 No. of Claims : 25

(12) PATENT APPLICATION PUBLICATION
(19) INDIA
(22) Date of filing of Application :16/04/2014
(21) Application No.3030/DELNP/2014 A
(43) Publication Date : 08/05/2015

(54) Title of the invention : HAIR STYLING APPARATUS

(51) International classification :A45D1/04,A45D2/00,A45D1/28
(31) Priority Document No :1200337.2
(32) Priority Date :10/01/2012
(33) Name of priority country :U.K.
(86) International Application No :PCT/GB2013/050036
Filing Date :10/01/2013
(87) International Publication No:WO 2013/104903
(61) Patent of Addition to Application Number :NA
Filing Date :NA
(62) Divisional to Application Number :NA
Filing Date :NA

(71)**Name of Applicant :**
1)JEMELLA LIMITED
Address of Applicant :Bridgewater Place Water Lane Leeds LS11 5BZ U.K.
(72)**Name of Inventor :**
1)WEATHERLY Robert Alexander
2)BRADY Daniel
3)SAYERS Steve
4)GAGIANO Mark Andrew
5)MOORE Timothy David
6)CLEMENTS Jeremy Peter
7)SCOTT Paul
8)BAKER James

(57) Abstract :
A hair styling apparatus comprises a first and a second arm moveable between a closed position in which a contacting surface of the first arm is adjacent a contacting surface of the second arm and an open position in which the contacting surfaces of each arm are spaced apart whereby the contacting surfaces of each arm have complementary profiles so that in use a section of hair is clamped between the contacting surfaces when the arms are in the closed position. A heating zone on at least one of the contacting surfaces is provided to heat the section of hair between the contacting surfaces. A cooling zone on at least one of the contacting surfaces is provided for cooling the section of hair after the section of hair has been heated. The cooling zone is curved whereby in use as the hair styling apparatus is moved along the section of hair in a generally linear fashion the section of hair is curled.

No. of Pages : 52 No. of Claims : 53

(12) PATENT APPLICATION PUBLICATION
(21) Application No.119/DEL/2012 A
(19) INDIA
(22) Date of filing of Application :12/01/2012
(43) Publication Date : 08/05/2015

(54) Title of the invention : REAL TIME DETECTION OF ENTEROCOCCI IN DAIRY FOODS USING SPORE GERMINATION BASED BIOASSAY

(51) International classification :C12N
(31) Priority Document No :NA
(32) Priority Date :NA
(33) Name of priority country :NA
(86) International Application No :NA
Filing Date :NA
(87) International Publication No : NA
(61) Patent of Addition to Application Number :NA
Filing Date :NA
(62) Divisional to Application Number :NA
Filing Date :NA

(71)**Name of Applicant :**
1)INDIAN COUNCIL OF AGRICULTURAL RESEARCH (ICAR)
Address of Applicant :Krishi Anushandhan Bhawan Dr. Rajendra Prasad Bhawan New Delhi 110001 India Delhi India
(72)**Name of Inventor :**
1)KUMAR Naresh
2)KAUR Gurpreet
3)THAKUR Geetika
4)RAGHU H V
5)SINGH Namita Ashish
6)RAGHAV Nishu
7)SINGH Vinai Kumar

(57) Abstract :
Abstract Real time detection of Enterococci in dairy foods using spore germination based bioassay The present invention relates to a spore germination based assay for the detection of microorganism Enterococci in a milk sample. The said assay comprises interaction of marker enzyme and non specific substrate resulting into the production of a germinant stimulus, which in turn indicates the presence or absence of target microorganism in a milk sample. Particularly, the invention enables the rapid detection of Enterococci which is based on targeting β-D-glucosidase as marker enzyme and its specific action on non specific substrate i.e. esculin / or cellobiose / or CMC resulting in germinant stimulus for spores produced by specific strain of B. megaterium. The assay is highly rapid and sensitive as the said assay enables the detection of target microorganism i.e. Enterococci in 8 ±2 hrs including sample enrichment in SAEBM (without esculin & ferric ammonium citrate) up to 4.5 ± 0.5 hrs and is capable of detecting the sample comprising as low as 5.5 ± 0.4 log cells. SAEBM has its application as selective media & micro-technique for detection and enumeration of Enterococci in milk sample. The assay time of micro-technique is ≤ 12 hrs with sensitivity up to 2-3 log count /ml. The invention also provides a sodium azide and esculin based culture media (SAEBM) which enables the selective enrichment of the target microorganism within 5-12 hrs.

No. of Pages : 41 No. of Claims : 28

(12) PATENT APPLICATION PUBLICATION
(19) INDIA
(22) Date of filing of Application :16/04/2014
(21) Application No.3033/DELNP/2014 A
(43) Publication Date : 08/05/2015

(54) Title of the invention : POLY (LACTIC ACID) AND POLYOLEFIN FILMS CONTAINING POROSITY AND SORBENTS

(51) International classification :C08J5/18,C08J9/00,C08L23/00
(31) Priority Document No :13/276953
(32) Priority Date :19/10/2011
(33) Name of priority country :U.S.A.
(86) International Application No :PCT/US2012/060731
Filing Date :18/10/2012
(87) International Publication No :WO 2013/059401
(61) Patent of Addition to Application Number :NA
Filing Date :NA
(62) Divisional to Application Number :NA
Filing Date :NA

(71)**Name of Applicant :**
1)MULTISORB TECHNOLOGIES INC.
Address of Applicant :325 Harlem Road Buffalo New York 14224 1893 U.S.A.
(72)**Name of Inventor :**
1)CHAU Chieh Chun

(57) Abstract :
Single and multilayer porous polyolefin films are prepared by extruding polyolefin with poly(lactic acid) (PLA) and followed by uniaxial or biaxial stretching. PLA is used as a pore former that creates porosity. The film provides adjustable gas and water vapor transmission rate by varying the PLA content. Sorbents may optionally be added in the formulation in selective layers. The porous films are useful in packaging and consumable applications. In particular partially miscible blends of PP and PLA is useful for creating fine porosity due to the fine PLA domains in the miscible blends.

No. of Pages : 18 No. of Claims : 17

(12) PATENT APPLICATION PUBLICATION
(19) INDIA
(22) Date of filing of Application :16/04/2014
(21) Application No.3034/DELNP/2014 A
(43) Publication Date : 08/05/2015

(54) Title of the invention : METHOD FOR GENERATING HYDROGEN AND OXYGEN BY STEAM ELECTROLYSIS

(51) International classification :C25B1/04,C25B11/04,C25B9/10
(31) Priority Document No :1159221
(32) Priority Date :12/10/2011
(33) Name of priority country :France
(86) International Application No :PCT/EP2012/070214
Filing Date :11/10/2012
(87) International Publication No :WO 2013/053858
(61) Patent of Addition to Application Number :NA
Filing Date :NA
(62) Divisional to Application Number :NA
Filing Date :NA

(71)**Name of Applicant :**
1)AREVA
Address of Applicant :33 Rue La Fayette F 75009 Paris France
(72)**Name of Inventor :**
1)SALA Batrice
2)GRASSET Frdric
3)LACROIX Olivier
4)SIRAT Abdelkader
5)RAHMOUNI Kamal
6)KEDDAM Michel
7)TAKENOUTI Hisasi
8)GOEURIOT Dominique
9)BENDJERIOU Baroudi
10)COLOMBAN Philippe
11)VAN DER LEE Arie
12)SANCHEZ Jos Grgorio

(57) Abstract :
THE PRESENT INVENTION RELATES TO A METHOD FOR GENERATING HYDROGEN AND OXYGEN ADSORBATES BY STEAM ELECTROLYSIS AT 200 TO 800°C USING AN ELECTROLYSIS CELL (30) COMPRISING A SOLID ELECTROLYTE (31) WHICH IS MADE OF A PROTON CONDUCTING CERAMIC AND WHICH IS ARRANGED BETWEEN AN ANODE (32) AND A CATHODE (33) EACH OF WHICH COMPRISES A PROTON CONDUCTING CERAMIC AND THE RATIO OF THE ELECTROACTIVE SURFACE TO THE GEOMETRIC SURFACE OF EACH OF WHICH IS EQUAL TO AT LEAST 10 SAID METHOD COMPRISING THE FOLLOWING STEPS: CIRCULATING A CURRENT BETWEEN THE ANODE (32) AND THE CATHODE (33) WHEREIN THE DENSITY OF THE CURRENT IS NO LESS THAN 500 MA/CM; INSERTING WATER IN THE FORM OF STEAM WHICH IS FED UNDER PRESSURE TO THE ANODE (32); OXIDIZING SAID WATER IN THE FORM OF STEAM AT THE ANODE (32) AND GENERATING HIGHLY REACTIVE OXYGEN AT THE ANODE (32) AFTER SAID OXIDATION; GENERATING PROTONATED SPECIES IN THE ELECTROLYTE (31) AFTER SAID OXIDATION AND MIGRATING SAID PROTONATED SPECIES IN THE ELECTROLYTE (31); AND REDUCING SAID PROTONATED SPECIES AT THE SURFACE OF THE CATHODE (33) IN THE FORM OF REACTIVE HYDROGEN ATOMS.

No. of Pages : 30 No. of Claims : 15

(12) PATENT APPLICATION PUBLICATION
(19) INDIA
(22) Date of filing of Application :10/01/2012
(21) Application No.267/DELNP/2012 A
(43) Publication Date : 08/05/2015

(54) Title of the invention : ISOTOPE PRODUCTION SYSTEM WITH SEPARATED SHIELDING

(51) International classification :H05H 6/00
(31) Priority Document No :12/492200
(32) Priority Date :26/06/2009
(33) Name of priority country :U.S.A.
(86) International Application No :PCT/US2010/037258
Filing Date :03/06/2010
(87) International Publication No :WO 2010/151412
(61) Patent of Addition to Application Number :NA
Filing Date :NA
(62) Divisional to Application Number :NA
Filing Date :NA

(71)**Name of Applicant :**
1)GENERAL ELECTRIC COMPANY
Address of Applicant :1 RIVER ROAD, SCHENECTADY, NEW YORK 12345, U.S.A
(72)**Name of Inventor :**
1)NORLING, JONAS
2)ERIKSSON, TOMAS

(57) Abstract :
An isotope production system that includes a cyclotron having a magnet yoke that surrounds an acceleration chamber. The cyclotron is configured to direct a particle beam from the acceleration chamber through the magnet yoke. The isotope production system also includes a target system that is located proximate to the magnet yoke. The target system is configured to hold a target material and includes a radiation shield that extends between the magnet yoke and the target location. The radiation shield is sized and shaped to attenuate gamma rays and/or neutrons emitted from the target material toward the magnet yoke. The isotope production system also includes a beam passage that extends from the acceleration chamber to the target location. The beam passage is at least partially formed by the magnet yoke and the radiation shield of the target system.

No. of Pages : 46 No. of Claims : 26

(12) PATENT APPLICATION PUBLICATION
(19) INDIA
(22) Date of filing of Application :10/01/2012
(21) Application No.272/DELNP/2012 A
(43) Publication Date : 08/05/2015

(54) Title of the invention : ANTIMICROBIAL COATING FOR DERMALLY INVASIVE DEVICES

(51) International classification :A61L 29/08
(31) Priority Document No :61/224,168
(32) Priority Date :09/07/2009
(33) Name of priority country :U.S.A.
(86) International Application No :PCT/US2010/041358
Filing Date :08/07/2010
(87) International Publication No :WO 2011/005951
(61) Patent of Addition to Application Number :NA
Filing Date :NA
(62) Divisional to Application Number :NA
Filing Date :NA

(71)**Name of Applicant :**
1)BECTON, DICKINSON AND COMPANY
Address of Applicant :1 BECTON DRIVE FRANKLIN LAKES NEW JERSEY 07417-1880 UNITED STATES OF AMERICA
(72)**Name of Inventor :**
1)BURKHOLZ, JONATHAN KARL
2)HOANG, MINH QUANG

(57) Abstract :
An antimicrobial coating applied to a transdermal surface of a catheter device. An antimicrobial coating applied to catheter device such that when the catheter device is fully inserted, the antimicrobial coating is interposed between the catheter device and the dermal layers of the patient.

No. of Pages : 28 No. of Claims : 21

(12) PATENT APPLICATION PUBLICATION
(19) INDIA
(22) Date of filing of Application :10/01/2012
(21) Application No.278/DELNP/2012 A
(43) Publication Date : 08/05/2015

(54) Title of the invention : METHOD AND APPARATUS FOR DETERMINING A MOVEMENT OF AN INJECTION VALVE NEEDLE

(51) International classification :F02D 41/30
(31) Priority Document No :10 2009 029 549.6
(32) Priority Date :17/09/2009
(33) Name of priority country :Germany
(86) International Application No :PCT/EP2010/063185
Filing Date :08/09/2010
(87) International Publication No :WO 2011/032873
(61) Patent of Addition to Application Number :NA
Filing Date :NA
(62) Divisional to Application Number :NA
Filing Date :NA

(71)**Name of Applicant :**
1)ROBERT BOSCH GMBH
Address of Applicant :POSTFACH 30 02 20, 70442 STUTTGART, GERMANY
(72)**Name of Inventor :**
1)RAPP, HOLGER
2)STOECKLEIN, WOLFGANG

(57) Abstract :
Described herein is a method for determining a point of time, at which a jet needle (11) disposed in an injection valve (2) carries out a change of movement. During this, a variable that provides information about a curve (40) indicating the pressure prevailing in a control chamber (24) of the injection valve is measured directly by a sensor in the control chamber (24). Further, from said variable, determining for the pressure curve (40), for which point of time of the pressure curve (40) has an extreme value (44, 46), and wherein said point of time is identified as the point of time of the change of movement.

No. of Pages : 15 No. of Claims : 9

(12) PATENT APPLICATION PUBLICATION
(19) INDIA
(22) Date of filing of Application :16/04/2014
(21) Application No.3037/DELNP/2014 A
(43) Publication Date : 08/05/2015

(54) Title of the invention : FLOW BATTERY WITH ENHANCED DURABILITY

(51) International classification :H01M8/04
(31) Priority Document No :NA
(32) Priority Date :NA
(33) Name of priority country :NA
(86) International Application No :PCT/US2011/066131
Filing Date :20/12/2011
(87) International Publication No :WO 2013/095374
(61) Patent of Addition to Application Number :NA
Filing Date :NA
(62) Divisional to Application Number :NA
Filing Date :NA

(71)**Name of Applicant :**
1)UNITED TECHNOLOGIES CORPORATION
Address of Applicant :1 Financial Plaza Hartford Connecticut 06103 U.S.A.
(72)**Name of Inventor :**
1)ZAFFOU Rachid
2)PERRY Michael L.

(57) Abstract :
A flow battery includes at least one electrochemical cell that has a first electrode a second electrode spaced apart from the first electrode and a separator arranged between the first electrode and the second electrode. A first storage portion and a second storage portion are respectively fluidly connected with the at least one electrochemical cell. A first liquid electrolyte and a second liquid electrolyte are located in the respective first storage portion and second storage portion. The first electrode has an area over which it is catalytically active with regard to the first liquid electrolyte and the second electrode has an area over which it is catalytically active with regard to the second liquid electrolyte such that the area of the first electrode is greater than the area of the second electrode.

No. of Pages : 12 No. of Claims : 13

(12) PATENT APPLICATION PUBLICATION
(19) INDIA
(22) Date of filing of Application :16/04/2014
(21) Application No.3038/DELNP/2014 A
(43) Publication Date : 08/05/2015

(54) Title of the invention : SWING OUT MOUNT

(51) International classification :H02B1/36,H02B11/127,H02B11/133
(31) Priority Document No :13/238650
(32) Priority Date :21/09/2011
(33) Name of priority country :U.S.A.
(86) International Application No :PCT/US2012/055723
Filing Date :17/09/2012
(87) International Publication No :WO 2013/043530
(61) Patent of Addition to Application Number :NA
Filing Date :NA
(62) Divisional to Application Number :NA
Filing Date :NA

(71)**Name of Applicant :**
1)SCHNEIDER ELECTRIC USA INC.
Address of Applicant :1415 S. Roselle Road Palatine Illinois 60067 U.S.A.
(72)**Name of Inventor :**
1)GIBBONS Donald

(57) Abstract :
An electrical enclosure includes a housing a moveable bracket an electrical device a lever and a drive assembly. The housing has a door attached to a body. The moveable bracket couples the electrical device to the body. The lever is positioned outside of the housing and is configured to switch between OFF and ON lever positions. The drive assembly at least partially protrudes through an aperture of the body and is attached to the lever. The drive assembly includes a drive cog that directly moves the handle of the circuit breaker between OFF and ON handle positions when the electrical device is in an operational position and the lever is switched from the OFF to the ON lever position.

No. of Pages : 22 No. of Claims : 20

(12) PATENT APPLICATION PUBLICATION
(19) INDIA
(22) Date of filing of Application :10/01/2012
(21) Application No.284/DELNP/2012 A
(43) Publication Date : 08/05/2015

(54) Title of the invention : APPARATUS AND PROCESS FOR CONTACTING HYDROCARBON FEED AND CATALYST

(51) International classification :C10G 11/18
(31) Priority Document No :12/556,052
(32) Priority Date :09/09/2009
(33) Name of priority country :U.S.A.
(86) International Application No :PCT/US2010/042900
Filing Date :22/07/2010
(87) International Publication No :WO 2011/031378
(61) Patent of Addition to Application Number :NA
Filing Date :NA
(62) Divisional to Application Number :NA
Filing Date :NA

(71)**Name of Applicant :**
1)UOP LLC
Address of Applicant :25 EAST ALGONQUIN ROAD, P.O. BOX 5017, DES PLAINES, ILLINOIS 60017-5017, UNITED STATES OF AMERICA;
(72)**Name of Inventor :**
1)COUCH, KEITH A.
2)PALMAS, PAOLO
3)LAMBIN, JASON P.
4)SPINELLI, GIOVANNI

(57) Abstract :
An apparatus and process for distributing a deflecting media into an axial center of a riser to push catalyst outwardly toward the feed injectors ensures better contacting between hydrocarbon feed and catalyst.

No. of Pages : 17 No. of Claims : 10

(12) PATENT APPLICATION PUBLICATION
(19) INDIA
(22) Date of filing of Application :11/01/2012
(21) Application No.297/DELNP/2012 A
(43) Publication Date : 08/05/2015

(54) Title of the invention : METHOD FOR PRODUCING A BODY FORMED FROM A GRANULAR MIXTURE

(51) International classification :B22C 1/22
(31) Priority Document No :0955185
(32) Priority Date :24/07/2009
(33) Name of priority country :France
(86) International Application No :PCT/FR2010/051457
Filing Date :09/07/2010
(87) International Publication No :WO 2011/010045
(61) Patent of Addition to Application Number :NA
Filing Date :NA
(62) Divisional to Application Number :NA
Filing Date :NA

(71)**Name of Applicant :**
1)HUTTENES ALBERTUS FRANCE
Address of Applicant :ZONE INDUSTRIELLE DE BRENOUILLE, F-60870 BRENOUILLE, FRANCE
(72)**Name of Inventor :**
1)STEPHANE SARRAZIN
2)MANUEL VARGAS

(57) Abstract :
The invention relates to a method for producing a body including: preparing a granular mixture including: a) at least 90 wt % of mineral oxide grains; b) 0.3 to 3 wt % of resin polycondensed with formaldehyde and/or the derivatives thereof, the percentage being calculated in terms of dry resin extract; c) 0.001 to 1 wt % of a hardening agent, the percentage being calculated in terms of dry hardener extract; d) 0.005 to 0.35 wt % of a formaldehyde scavenger compound; and e) 0.2 to 3 wt % of water; contacting said granular mixture with a surface of a forming tool; and. insufflating a gas flow at 50 to 380 degrees into the granular mixture for 1 to 300 seconds in order to at least partially harden said mixture, the formaldehyde scavenger being carbohydrazide.

No. of Pages : 16 No. of Claims : 7

(12) PATENT APPLICATION PUBLICATION
(19) INDIA
(22) Date of filing of Application :16/04/2014
(21) Application No.3040/DELNP/2014 A
(43) Publication Date : 08/05/2015

(54) Title of the invention : SWITCHGEAR OPERATING MECHANISM AND SWITCHGEAR

(51) International classification :H01H33/42,H01H33/40,H02B13/02
(31) Priority Document No :2011204024
(32) Priority Date :20/09/2011
(33) Name of priority country :Japan
(86) International Application No :PCT/JP2012/073925
Filing Date :19/09/2012
(87) International Publication No :WO 2013/042687
(61) Patent of Addition to Application Number :NA
Filing Date :NA
(62) Divisional to Application Number :NA
Filing Date :NA

(71)**Name of Applicant :**
1)KABUSHIKI KAISHA TOSHIBA
Address of Applicant :1 1 Shibaura 1 chome Minato ku Tokyo 1058001 Japan
(72)**Name of Inventor :**
1)IWASAWA Tadashi
2)KOBAYASHI Yoshikata
3)MARUSHIMA Satoshi
4)SHIMIZU Masaharu
5)NAGAO Masahiro
6)WATANABE Tatsuya
7)TAKAGI Hirokazu
8)OHDA Yoshiaki

(57) Abstract :
Provided are a switchgear for which the contact parting time is reduced while stably maintaining the spring force of an interrupt spring and a mechanism for operating the switchgear. This mechanism has a main lever (11) that upon receiving the spring force released by the interrupt spring (12) when making a transition to an interrupting operation rotates so as to pull a movable contact away from a facing contact. A sub lever (71) fixed to an axially rotatable sub shaft (70) is connected to the main lever (11). A single latch lever (72) having a roller (72a) attached to the front end is fixed to the sub shaft (70). The latch lever (72) is prevented from rotating by a single intervening latch section (91) which is provided on the movement trajectory of the roller (72a). A weight (93) is pressed against the latch section (91) in a withdrawable manner whereby the weight (93) is pushed away by an actuator (21) so as to allow the latch section (91) to rotate to retreat from the trajectory of the roller (72a).

No. of Pages : 50 No. of Claims : 16

(12) PATENT APPLICATION PUBLICATION
(21) Application No.3041/DELNP/2014 A
(19) INDIA
(22) Date of filing of Application :16/04/2014
(43) Publication Date : 08/05/2015

(54) Title of the invention : DEVICE AND METHOD FOR GAS TREATMENT USING LOW TEMPERATURE PLASMA AND CATALYST MEDIUM

(51) International classification :B01D53/86,A61L9/00,B01J8/02
(31) Priority Document No :2011206650
(32) Priority Date :21/09/2011
(33) Name of priority country :Japan
(86) International Application No :PCT/JP2012/005600
Filing Date :04/09/2012
(87) International Publication No:WO 2013/042328
(61) Patent of Addition to Application Number :NA
Filing Date :NA
(62) Divisional to Application Number :NA
Filing Date :NA

(71)**Name of Applicant :**
1)NBC MESHTEC INC.
Address of Applicant :50 3 Toyoda 2 chome Hino shi Tokyo 1910053 Japan
(72)**Name of Inventor :**
1)IKEGAMI Makoto
2)MATSUMOTO Takanori
3)NAKAYAMA Tsuruo
4)JIKIHARA Youhei

(57) Abstract :
To provide a device and a method for oxidation decomposition treatment of a hazardous gas of a volatile organic compound (VOC) or the like at normal temperature. [Solution] A gas treatment device characterized in being provided with a plasma generating unit and a catalyst medium. The plasma generating unit is provided with at least a flow channel through which a gas to be treated flows; and a power supply unit for supplying electrical power a first electrode a second electrode and a dielectric material arranged inside the flow channel. A voltage is impressed between the first electrode and the second electrode by the power supply unit and electrical discharging is caused to occur whereby plasma is generated. The catalyst medium is adapted for accelerating a reaction with the gas to be treated and is provided in a position where the plasma generated by the plasma generating unit inside the flow channel is present wherein the catalyst medium has metallic catalytic particles present on an inorganic substance.

No. of Pages : 92 No. of Claims : 12

(12) PATENT APPLICATION PUBLICATION
(19) INDIA
(22) Date of filing of Application :12/01/2012
(21) Application No.111/DEL/2012 A
(43) Publication Date : 08/05/2015

(54) Title of the invention : SYSTEM AND METHOD FOR VERIFICATION

(51) International classification :H03F
(31) Priority Document No :NA
(32) Priority Date :NA
(33) Name of priority country :NA
(86) International Application No :NA
Filing Date :NA
(87) International Publication No :NA
(61) Patent of Addition to Application Number :NA
Filing Date :NA
(62) Divisional to Application Number :NA
Filing Date :NA

(71)**Name of Applicant :**
1)AMIT MITTAL
Address of Applicant :B-135, 2ND FLOOR, SECTOR-50, NOIDA, UTTAR PRADESH - 201301, INDIA [IN] Uttar Pradesh India
2)SIDHARTH OSWAL
(72)**Name of Inventor :**
1)AMIT MITTAL
2)SIDHARTH OSWAL

(57) Abstract :
A system and the method for verification and validation of whether a request to gain access to a restricted domain originated from a human user. Upon receiving a request for access to the restricted domain, a verification task is generated automatically using the natural language processing and communicated to the requestor. The verification task comprises of information which is required to be perceived by the requestor for devising its response to the verification task. The embedded information is preferably commercial in nature. Once the response to the verification task is received and verified as correct, the requestor is qualified as human and access to the restricted domain is granted.

No. of Pages : 30 No. of Claims : 29

(12) PATENT APPLICATION PUBLICATION
(19) INDIA
(22) Date of filing of Application :16/04/2014
(21) Application No.3043/DELNP/2014 A
(43) Publication Date : 08/05/2015

(54) Title of the invention : GAS CIRCUIT BREAKER

(51) International classification	:H01H33/42,H01H33/30,H01H33/40
(31) Priority Document No	:2011232279
(32) Priority Date	:21/10/2011
(33) Name of priority country	:Japan
(86) International Application No	:PCT/JP2012/006629
Filing Date	:17/10/2012
(87) International Publication No	:WO 2013/057936
(61) Patent of Addition to Application Number	:NA
Filing Date	:NA
(62) Divisional to Application Number	:NA
Filing Date	:NA

(71)**Name of Applicant :**
1)KABUSHIKI KAISHA TOSHIBA
Address of Applicant :1 1 Shibaura 1 chome Minato ku Tokyo 1058001 Japan
(72)**Name of Inventor :**
1)OHDA Yoshiaki
2)SHIMAMURA Akira
3)OCHIAI Ryusuke
4)MARUSHIMA Satoshi

(57) Abstract :
In the present invention the operating speed of a rod for transmitting an operating force of a manipulation mechanism to a movable electrode section is improved. One end of a first link is connected to one end of an operating rod which is connected to a movable electrode section housed inside a container filled with an insulating gas. One end of an amplification lever is connected to the other end of the first link and one end of a second link is connected to the other end of the amplification lever. One end of a support bearing fixed to a partition wall of the container is connected to the other end of the second link and one end of a sealed rod is connected to substantially the center of the amplification lever. One end of a third link is connected to the other end of the sealed rod and the other end of the third link is connected to an output section of the manipulation mechanism. A support link initial angle () is set in the range of 2° to 0° said support link initial angle being an angle formed by a second straight line (12c) on the second link (12) and the motion axis line (14c) of the sealed rod (14).

No. of Pages : 33 No. of Claims : 9

(12) PATENT APPLICATION PUBLICATION
(19) INDIA
(22) Date of filing of Application :16/04/2014
(21) Application No.3044/DELNP/2014 A
(43) Publication Date : 08/05/2015

(54) Title of the invention : METHOD FOR THE THERMAL PREPARATION OF AN AUXILIARY MATERIAL AND PREPARATION UNIT

(51) International classification :B05B15/12,B01D37/02,B01D41/02
(31) Priority Document No :20 2011 107 555.2
(32) Priority Date :02/11/2011
(33) Name of priority country :Germany
(86) International Application No :PCT/EP2012/071627
Filing Date :31/10/2012
(87) International Publication No :WO 2013/064575
(61) Patent of Addition to Application Number :NA
Filing Date :NA
(62) Divisional to Application Number :NA
Filing Date :NA

(71)**Name of Applicant :**
1)DRR SYSTEMS GMBH
Address of Applicant :Carl Benz Strasse 34 74321 Bietigheim Bissingen Germany
(72)**Name of Inventor :**
1)HOLLER Sebastian
2)KIRSCHKE Cord

(57) Abstract :
In order to provide a method for the thermal preparation of an auxiliary material which to clean a stream of untreated gas laden with an organic impurity can be introduced into the stream of untreated gas and together with the organic impurity forms a stable system comprising the impurity and the auxiliary material that can be carried out easily and with sparing use of resources it is proposed that the method comprises the following steps: feeding the system comprising the impurity and the auxiliary material and a stream of carrier gas heated with respect to standard conditions into a thermal preparation device; chemically converting at least part of the organic impurity to produce a prepared auxiliary material; separating the prepared auxiliary material from the auxiliary material laden with an organic impurity by transporting it by means of a gas flow; and removing the prepared auxiliary material from the thermal preparation device.

No. of Pages : 68 No. of Claims : 17

(12) PATENT APPLICATION PUBLICATION
(19) INDIA
(22) Date of filing of Application :16/04/2014
(21) Application No.3045/DELNP/2014 A
(43) Publication Date : 08/05/2015

(54) Title of the invention : ORAL CARE GELS

(51) International classification :A61Q11/02,A61K8/21,A61K8/34
(31) Priority Document No :NA
(32) Priority Date :NA
(33) Name of priority country :NA
(86) International Application No :PCT/US2011/060676
Filing Date :15/11/2011
(87) International Publication No :WO 2013/074079
(61) Patent of Addition to Application Number :NA
Filing Date :NA
(62) Divisional to Application Number :NA
Filing Date :NA

(71)**Name of Applicant :**
1)COLGATE PALMOLIVE COMPANY
Address of Applicant :300 Park Avenue New York New York 10022 U.S.A.
(72)**Name of Inventor :**
1)CHEN Elva
2)KENNEDY Sharon
3)MIRAJKAR Yelloji Rao
4)JOGUN Suzanne
5)PRENCIPE Michael

(57) Abstract :
The invention provides an orally acceptable plaque indicator gel comprising a dye in sufficient concentration to visibly stain plaque upon application optionally for use in combination with an orally acceptable plaque removal gel comprising an antiplaque agent in sufficient concentration to remove plaque and or kill bacteria upon application in each case the gel having a specific viscosity permitting efficient application using a pen dispenser as well as reduced dye or antiplaque agent concentration together with methods of using the same.

No. of Pages : 18 No. of Claims : 16

(12) PATENT APPLICATION PUBLICATION
(21) Application No.1950/DEL/2012 A
(19) INDIA
(22) Date of filing of Application :25/06/2012
(43) Publication Date : 08/05/2015

(54) Title of the invention : AN AUTOMATIC SYSTEM FOR VEHICLE VARIANTS CHECK

(51) International classification	:A47F7/00	(71)**Name of Applicant :**
(31) Priority Document No	:NA	**1)MARUTI SUZUKI INDIA LIMITED**
(32) Priority Date	:NA	Address of Applicant :1, NELSON MANDELA ROAD,
(33) Name of priority country	:NA	VASANT KUNJ, NEW DELHI-110070, INDIA. Delhi India
(86) International Application No	:NA	(72)**Name of Inventor :**
Filing Date	:NA	**1)SUMIT MALIK**
(87) International Publication No	: NA	**2)A SENTHIL KUMAR**
(61) Patent of Addition to Application Number	:NA	
Filing Date	:NA	
(62) Divisional to Application Number	:NA	
Filing Date	:NA	

(57) Abstract :
This invention relates to an automatic system for vehicle variants check comprising of a computer installed with master data for different models of vehicles provided in connection with vehicle tracking system with a display. The system of the instant invention prevents installation of wrong parts in vehicle and ensures accuracy.

No. of Pages : 27 No. of Claims : 7

(12) PATENT APPLICATION PUBLICATION
(19) INDIA
(22) Date of filing of Application :10/01/2012
(21) Application No.262/DELNP/2012 A
(43) Publication Date : 08/05/2015

(54) Title of the invention : CONTAINER FILLING SYSTEMS & METHODS (JET)

(51) International classification :B65B 3/02
(31) Priority Document No :12/494,427
(32) Priority Date :30/06/2009
(33) Name of priority country :U.S.A.
(86) International Application No :PCT/US2010/038080
Filing Date :10/06/2010
(87) International Publication No :WO 2011/002589
(61) Patent of Addition to Application Number :NA
Filing Date :NA
(62) Divisional to Application Number :NA
Filing Date :NA

(71)**Name of Applicant :**
1)THE COCA-COLA COMPANY
Address of Applicant :ONE COCA-COLA PLAZA, NW, ATLANTA, GA 30313, UNITED STATES OF AMERICA,
(72)**Name of Inventor :**
1)ROBERT V. SHEEHY
2)MARK F. FRIEDLEIN

(57) Abstract :
A method of filling a cartridge having one or more pouches. The method may include the steps of placing the pouch on a support, placing a first cartridge half over the pouch and the support, placing the pouch and the first cartridge half on a second cartridge half to form the cartridge, maneuvering the cartridge to a filling unit, and filling the pouch within the cartridge.

No. of Pages : 31 No. of Claims : 15

(12) PATENT APPLICATION PUBLICATION
(21) Application No.268/DELNP/2012 A
(19) INDIA
(22) Date of filing of Application :10/01/2012
(43) Publication Date : 08/05/2015

(54) Title of the invention : SCHEDULING DATA TRANSMISSIONS BETWEEN A MOBILE TERMINAL AND A BASE STATION IN A WIRELESS COMMUNICATIONS NETWORK

(51) International classification :H04W 72/12
(31) Priority Document No :61/187,732
(32) Priority Date :17/06/2009
(33) Name of priority country :U.S.A.
(86) International Application No :PCT/EP2010/057714
Filing Date :02/06/2010
(87) International Publication No :WO 2010/145938
(61) Patent of Addition to Application Number :NA
Filing Date :NA
(62) Divisional to Application Number :NA
Filing Date :NA

(71)**Name of Applicant :**
1)TELEFONAKTIEBOLAGET LM ERICSSON (PUBL)
Address of Applicant :SE-164-83 STOCKHOLM (SE) Sweden
(72)**Name of Inventor :**
1)LINDOFF, BENGT
2)ANDERSSON, STEFAN
3)SUNDSTROM, LARS

(57) Abstract :
A method of scheduling wireless data transmissions between a mobile terminal and a base station using multiple system carrier signals is disclosed. The method comprises the steps of receiving (101) in the mobile terminal information from the base station indicating available system carriers; detecting (102) at least one dynamic parameter indicative of the mobile terminal's current capability to handle non-contiguous system carriers; determining (103) from the dynamic parameter whether a situation has occurred where the mobile terminal's capability to handle non-contiguous system carriers has been reduced; modifying (104), in such case, feedback information to be transmitted to the base station; and transmitting (105) the modified feedback information to the base station. By modifying the feedback information in this way the mobile terminal reduces the likelihood that the base station allocates non-contiguous system carriers to the mobile terminal in situations where it has a reduced capability of handling such system carriers.

No. of Pages : 26 No. of Claims : 16

(12) PATENT APPLICATION PUBLICATION
(19) INDIA
(22) Date of filing of Application :10/01/2012
(21) Application No.279/DELNP/2012 A
(43) Publication Date : 08/05/2015

(54) Title of the invention : NAVIGATION DEVICE USING MAP DATA WITH ROUTE SEARCH ACCELERATION DATA

(51) International classification :G01C 21/32
(31) Priority Document No :61/213,746
(32) Priority Date :09/07/2009
(33) Name of priority country :U.S.A.
(86) International Application No :PCT/EP2010/059947
Filing Date :09/07/2010
(87) International Publication No :WO 2011/004029
(61) Patent of Addition to Application Number :NA
Filing Date :NA
(62) Divisional to Application Number :NA
Filing Date :NA

(71)**Name of Applicant :**
1)TOMTOM INTERNATIONAL B.V.
Address of Applicant :REMBRANDTPLEIN 35, NL-1017 CT AMSTERDAM, NETHERLANDS
(72)**Name of Inventor :**
1)SCHILLING, HEIKO
2)GAWRILOW, EWGENIJ
3)HILGER, MORITZ
4)PROFOUS, ANDREAS
5)WERBER, JURGEN

(57) Abstract :
A method of creating map data including search acceleration data arranged to increase the speed at which a route can be planned across an electronic map comprising a plurality of navigable segments, each navigable segment representing a segment of a navigable route in the area covered by the map, wherein the method comprises: a) reducing the number of navigable segments to be considered in the creation of the search acceleration data by removing navigable segments to form a core network of navigable segments; b) dividing the electronic map into a set of hierarchical regions such that the or each navigable segment is categorized into at least one region in each level of the hierarchy; c) using a time varying function associated with at least some, and generally each, navigable segment of the core network to determine whether that navigable segment is part of minimum cost route to at least one of the regions and recording this determination in the search acceleration data.

No. of Pages : 113 No. of Claims : 40

(12) PATENT APPLICATION PUBLICATION
(19) INDIA
(22) Date of filing of Application :16/04/2014
(21) Application No.3052/DELNP/2014 A
(43) Publication Date : 08/05/2015

(54) Title of the invention : PROVIDING A FUNCTION OF A BASIC INPUT/OUTPUT SYSTEM (BIOS) IN A PRIVILEGED DOMAIN

(51) International classification :G06F9/22,G06F9/44
(31) Priority Document No :NA
(32) Priority Date :NA
(33) Name of priority country :NA
(86) International Application No :PCT/US2011/057258
Filing Date :21/10/2011
(87) International Publication No :WO 2013/058766
(61) Patent of Addition to Application Number :NA
Filing Date :NA
(62) Divisional to Application Number :NA
Filing Date :NA

(71)**Name of Applicant :**
1)HEWLETT PACKARD DEVELOPMENT COMPANY L.P.
Address of Applicant :11445 Compaq Center Drive W. Houston Texas 77070 U.S.A.
(72)**Name of Inventor :**
1)ALI Valiuddin Y.
2)PIRES Jose Paulo Xavier
3)MANN James M.
4)BALACHEFF Boris
5)DALTON Chris I.

(57) Abstract :
A privileged domain includes a function of a Basic Input/Output System (BIOS). A request to access the function of the BIOS is routed to the privileged domain.

No. of Pages : 26 No. of Claims : 15

(12) PATENT APPLICATION PUBLICATION
(19) INDIA
(22) Date of filing of Application :11/01/2012
(21) Application No.298/DELNP/2012 A
(43) Publication Date : 08/05/2015

(54) Title of the invention : REINFORCED ROLL AND METHOD OF MAKING SAME

(51) International classification :B02C 15/00
(31) Priority Document No :12/502,277
(32) Priority Date :14/07/2009
(33) Name of priority country :U.S.A.
(86) International Application No :PCT/US2010/039574
Filing Date :23/06/2010
(87) International Publication No :WO 2011/008439
(61) Patent of Addition to Application Number :NA
Filing Date :NA
(62) Divisional to Application Number :NA
Filing Date :NA

(71)**Name of Applicant :**
1)TDY INDUSTRIES, INC.
Address of Applicant :1000 SIX PPG PLACE, PITTSBURGH, PENNSYLVANIA 15222, USA
(72)**Name of Inventor :**
1)PRAKASH K. MIRCHANDANI
2)MORRIS E. CHANDLER

(57) Abstract :
An article in the form of one of a plate, a sheet, a cylinder, and a portion of a cylinder, which is adapted for use as at least a portion of a wear resistant working surface of a roll is disclosed The article includes a metal matrix composite compris¬ing a plurality of inorganic particles dispersed in a matrix material. The matrix material includes at least one of a metal and a metal alloy, wherein the melting temperature of the inorganic particles is greater man the melting temperature of the matrix material. A plurality of hard elements are embedded in the metal matrix composite. The wear resistance of the metal matrix composite is less than the wear resistance of the hard elements, and the metal matrix composite preferentially wears away when the article is in use, thereby providing or preserving gaps between each of the plurality of hard elements at a working surface of the article.

No. of Pages : 45 No. of Claims : 55

(12) PATENT APPLICATION PUBLICATION
(19) INDIA
(22) Date of filing of Application :11/01/2012
(21) Application No.305/DELNP/2012 A
(43) Publication Date : 08/05/2015

(54) Title of the invention : METHOD AND DEVICE FOR RESISTING WEAR FROM PARTICLE CONTAINING WATER ON AN IMPELLER

(51) International classification :F03B 3/12
(31) Priority Document No :20092682
(32) Priority Date :15/07/2009
(33) Name of priority country :Norway
(86) International Application No :PCT/NO2010/000282
Filing Date :12/07/2010
(87) International Publication No :WO 2011/008107
(61) Patent of Addition to Application Number :NA
Filing Date :NA
(62) Divisional to Application Number :NA
Filing Date :NA

(71)**Name of Applicant :**
1)DYNAVEC AS
Address of Applicant :LIVBYGGET, N-7125 VANVIKAN, NORWAY
(72)**Name of Inventor :**
1)DAHLHAUG, OLE, GUNNAR

(57) Abstract :
A method and a device to counteracting wear from particle bearing drive water in a runner (4) in a water turbine (1), the runner (4) comprising a runner hub (16) and a vane (18), or a runner hub (16), a vane (18), and a runner band (20), the vane (18) being attached to the runner hub (16) in a first attachment area (22) and to the runner band (20) in a second attachment area (24), and where the method comprises: - routing a supply channel (40) for water cleaner than the drive water to at least the first attachment area (22) or the second attachment area (24) and - leading water cleaner than the drive water to flow over at least a portion of the vane (18) surface.

No. of Pages : 13 No. of Claims : 8

(12) PATENT APPLICATION PUBLICATION
(19) INDIA
(22) Date of filing of Application :16/04/2014
(21) Application No.3050/DELNP/2014 A
(43) Publication Date : 08/05/2015

(54) Title of the invention : SENSING SYSTEM FOR DETECTING A SUBSTANCE IN A DIALYSATE

(51) International classification :A61M1/14,B01D19/00,B01D61/24
(31) Priority Document No :PCT/SG2011/000395
(32) Priority Date :08/11/2011
(33) Name of priority country :Singapore
(86) International Application No :PCT/SG2012/000425
Filing Date :08/11/2012
(87) International Publication No :WO 2013/070172
(61) Patent of Addition to Application Number :NA
Filing Date :NA
(62) Divisional to Application Number :NA
Filing Date :NA

(71)**Name of Applicant :**
1)TEMASEK POLYTECHNIC
Address of Applicant :Engineering Department 21 Tampines Avenue 1 Singapore 529757 Singapore
(72)**Name of Inventor :**
1)BLUCHEL Christian Gert
2)WANG Yanmei
3)ZHANG Hua
4)ER Jui Pin
5)WONG Kim Jyh

(57) Abstract :
Embodiments of the present invention provide a sensing system for detecting a substance in a dialysate the system inclucing: a hydrophobic barrier capable of allowing the substance in the dialysate to equilibrate to a gas; a detector capable of detecting the gas; an interface disposed between the hydrophobic barrier and the detector and configured to allow fluid communication of the gas; and one or more delivery mechanisms capable of transporting the gas from the hydrophobic barrier to the detector. A method of detecting ammonium gas in a dialysate is also provided.

No. of Pages : 100 No. of Claims : 22

(12) PATENT APPLICATION PUBLICATION
(21) Application No.3051/DELNP/2014 A
(19) INDIA
(22) Date of filing of Application :16/04/2014
(43) Publication Date : 08/05/2015

(54) Title of the invention : COPPER ALLOY AND COPPER ALLOY FORMING MATERIAL

(51) International classification :C22C9/00,C22F1/08,C22F1/00
(31) Priority Document No :2011248731
(32) Priority Date :14/11/2011
(33) Name of priority country :Japan
(86) International Application No :PCT/JP2012/078688
Filing Date :06/11/2012
(87) International Publication No :WO 2013/073412
(61) Patent of Addition to Application Number :NA
Filing Date :NA
(62) Divisional to Application Number :NA
Filing Date :NA

(71)**Name of Applicant :**
1)MITSUBISHI MATERIALS CORPORATION
Address of Applicant :3 2 Otemachi 1 chome Chiyoda ku Tokyo 1008117 Japan
(72)**Name of Inventor :**
1)MAKI Kazunari
2)ITO Yuki

(57) Abstract :
COPPER ALLOYS OF THE FIRST TO THIRD EMBODIMENTS OF THE PRESENT INVENTION CONTAIN FROM 3.3% BY ATOM TO 6.9% BY ATOM (INCLUSIVE) OF MG WITH THE BALANCE SUBSTANTIALLY MADE UP OF CU AND UNAVOIDABLE IMPURITIES AND WITH AN OXYGEN CONTENT OF 500 PPM BY ATOM OR LESS. IN ADDITION THE COPPER ALLOYS SATISFY ONE OR BOTH OF THE CONDITIONS (A) AND (B) DESCRIBED BELOW. (A) WHEN THE MG CONTENT IS EXPRESSED AS X% BY ATOM THE ELECTRIC CONDUCTIVITY S (%IACS) SATISFIES THE FOLLOWING FORMULA (1). S = {1.7241/(0.0347 — X + 0.6569 — X + 1.7)} — 100 (1) (B) THE AVERAGE NUMBER OF PIECES OF AN INTERMETALLIC COMPOUND WHICH HAS A PARTICLE DIAMETER OF 0.1 M OR MORE AND IS MAINLY COMPOSED OF CU AND MG IS 1 PIECE/M OR LESS. A COPPER ALLOY OF THE FOURTH EMBODIMENT OF THE PRESENT INVENTION ADDITIONALLY CONTAINS ONE OR MORE ELEMENTS SELECTED FROM AMONG
AL NI SI MN LI TI FE CO CR AND ZR IN A TOTAL AMOUNT OF FROM 0.01% BY ATOM TO 3.0% BY ATOM (INCLUSIVE) AND SATISFIES THE CONDITION (B).

No. of Pages : 46 No. of Claims : 7

(12) PATENT APPLICATION PUBLICATION
(21) Application No.3015/DELNP/2014 A
(19) INDIA
(22) Date of filing of Application :16/04/2014
(43) Publication Date : 08/05/2015

(54) Title of the invention : DEVICE AND METHOD FOR CONTROLLING ANALYZING AND MANAGING PHASES OF CONSERVATION AND/OR PROCESSING OF FOOD IN A MOBILE OR FIXED CLOSED SPACE

(51) International classification :G05D21/00,G05D21/02
(31) Priority Document No :MI2011A001902
(32) Priority Date :20/10/2011
(33) Name of priority country :Italy
(86) International Application No :PCT/EP2012/070832
Filing Date :21/10/2012
(87) International Publication No :WO 2013/057302
(61) Patent of Addition to Application Number :NA
Filing Date :NA
(62) Divisional to Application Number :NA
Filing Date :NA

(71)**Name of Applicant :**
1)CUOMO Alessandro
Address of Applicant :Via Taras 59 I 88900 Crotone Italy
(72)**Name of Inventor :**
1)CUOMO Alessandro

(57) Abstract :
Device and method for controlling analyzing and managing phases of conservation and/or processing of food in a mobile or fixed closed space comprising a user interface with elements for data entry (1) a master control unit with memory and software (2) a management means system of the physical parameters of the food and/or of the space in which said food itself (6) is inserted integrated means for controlling and measuring the pH means for controlling physical parameters of food and/or of the space in which said food (6) is inserted characterized by the fact that the master unit has a software program which has in memory of one or more foods to be conserved or transformed and for each food the succession of variations of the Physical parameters for each phase of conserving and/or processing which has for each phase a safety interval of pH where said software manages for each value of the pH measured outside the safety interval of each phase a management program of physical parameters of food and/or the space in which said food (6) is inserted to bring the pH value within the safety interval of pH that said integrated means for controlling and measuring the pH is provided with a calibration system of the means for controlling and measuring the pH (10).

No. of Pages : 24 No. of Claims : 10

(12) PATENT APPLICATION PUBLICATION
(19) INDIA
(22) Date of filing of Application :16/04/2014
(21) Application No.3016/DELNP/2014 A
(43) Publication Date : 08/05/2015

(54) Title of the invention : CONVEYING CYLINDER METHOD FOR MANUFACTURE THEREOF AND PUMPING EQUIPMENT WITH SAME

(51) International classification :C25D5/14,F04B53/16
(31) Priority Document No :NA
(32) Priority Date :NA
(33) Name of priority country :NA
(86) International Application No :PCT/CN2011/080615
Filing Date :10/10/2011
(87) International Publication No :WO 2013/053097
(61) Patent of Addition to Application Number :NA
Filing Date :NA
(62) Divisional to Application Number :NA
Filing Date :NA

(71)**Name of Applicant :**
1)ZOOMLION HEAVY INDUSTRY SCIENCE AND TECHNOLOGY CO. LTD.
Address of Applicant :No.361 Yinpen South Road Yuelu District Changsha Hunan 410013 China
2)HUNAN ZOOMLION SPECIAL VEHICLE CO. LTD.
(72)**Name of Inventor :**
1)CHEN Yiwei
2)LIAO Mengan
3)RONG Ransheng
4)SHEN Shida

(57) Abstract :
A conveying cylinder a method for manufacture thereof and pumping equipment with the conveying cylinder are disclosed. The manufacturing method of the conveying cylinder comprises the following steps: machining to form a preparation cylinder body; performing primary electroplating on the surface of the preparation cylinder body and performing dehydrogenation treatment on a plating layer after the primary electroplating so as to form a first chromium layer with the rigidity of HRC 58 to 60 and the thickness of 0.15 to 0.2 mm; and performing secondary electroplating on the surface of the first chromium layer to form a second chromium layer with the rigidity of HRC 66 to 68 and the thickness of 0.15 to 0.2 mm so as to form the conveying cylinder. In the method the first hard chromium layer and the second hard chromium layer which have matched thickness and rigidity are electroplated on the inner surface of the cylinder body so that the abrasion resistance of the whole conveying cylinder is improved the anti stripping capacity of all the hard chromium layers is improved and the service life of the conveying cylinder is prolonged.

No. of Pages : 21 No. of Claims : 10

(12) PATENT APPLICATION PUBLICATION
(19) INDIA
(22) Date of filing of Application :16/04/2014
(21) Application No.3017/DELNP/2014 A
(43) Publication Date : 08/05/2015

(54) Title of the invention : METHOD TO DETERMINE ZYGOSITY OF THE FAD3 GENE IN CANOLA

(51) International classification :C12Q1/68,C07H21/04
(31) Priority Document No :61/550170
(32) Priority Date :21/10/2011
(33) Name of priority country :U.S.A.
(86) International Application No :PCT/US2012/061000
Filing Date :19/10/2012
(87) International Publication No :WO 2013/059578
(61) Patent of Addition to Application Number :NA
Filing Date :NA
(62) Divisional to Application Number :NA
Filing Date :NA

(71)**Name of Applicant :**
1)DOW AGROSCIENCES LLC
Address of Applicant :9330 Zionsville Road Indianapolis IN 46268 U.S.A.
(72)**Name of Inventor :**
1)UBAYASENA Lasantha Chandana
2)EHLERT Zoe
3)CHANNABASAVARADHYA Chandra Shekara A.
4)GUPTA Manju

(57) Abstract :
The subject disclosure relates in part to endpoint PCR assays for the detection and high throughput zygosity analysis of the fad 3c gene in canola. The subject disclosure further relates in part to the use of wild type DNA as a reference for use in determining zygosity. These and other related procedures can be used to uniquely identify the zygosity and variety of canola lines comprising the subject gene. The subject disclosure also provides related kits for determining zygosity from a sample of a canola plant or seed for example.

No. of Pages : 39 No. of Claims : 16

(12) PATENT APPLICATION PUBLICATION
(19) INDIA
(22) Date of filing of Application :11/01/2012
(21) Application No.309/DELNP/2012 A
(43) Publication Date : 08/05/2015

(54) Title of the invention : MITIGATING ELECTRODE EROSION IN HIGH TEMPERATURE PEM FUEL CELL

(51) International classification :H01M 8/04
(31) Priority Document No :NA
(32) Priority Date :NA
(33) Name of priority country :NA
(86) International Application No :PCT/US2009/004892
Filing Date :28/08/2009
(87) International Publication No :WO 2011/025469
(61) Patent of Addition to Application Number :NA
Filing Date :NA
(62) Divisional to Application Number :NA
Filing Date :NA

(71)**Name of Applicant :**
1)UTC POWER CORPORATION
Address of Applicant :195 GOVERNOR'S HIGHWAY, SOUTH WINDSOR, CT 06074, USA
(72)**Name of Inventor :**
1)DARLING ROBERT M.
2)BADRINARAYANAN PARAVASTU
3)REISER CARL A.

(57) Abstract :
A method of operating a fuel cell power plant (10) including a stack (11) of fuel cells having an anode catalyst layer and a cathode electrode (15) including a catalyst layer disposed on catalyst support material is characterized by, during normal operation of said power plant, adjusting the voltage of the stack to be substantially equal to or less than a predetermined maximum voltage for the temperature of the stack. Further, said step of adjusting comprises adjusting the stack voltage to the lesser of: a) a predetermined voltage above which corrosion of catalyst support material is significant and below which corrosion of catalyst support material is insignificant at the temperature of the stack; and b) a predetermined voltage above which dissolution of catalyst is significant and below which dissolution of the catalyst is insignificant at the temperature of the stack.

No. of Pages : 13 No. of Claims : 11

(12) PATENT APPLICATION PUBLICATION
(19) INDIA
(22) Date of filing of Application :11/01/2012
(21) Application No.110/DEL/2012 A
(43) Publication Date : 08/05/2015

(54) Title of the invention : HERBICIDAL COMPOUNDS

(51) International classification :A61K
(31) Priority Document No :NA
(32) Priority Date :NA
(33) Name of priority country :NA
(86) International Application No :NA
Filing Date :NA
(87) International Publication No : NA
(61) Patent of Addition to Application Number :NA
Filing Date :NA
(62) Divisional to Application Number :NA
Filing Date :NA

(71)**Name of Applicant :**
1)Syngenta Limited
Address of Applicant :European Regional Centre Priestley Road Surrey Research Park Guildford Surrey GU2 7YH United Kingdom
2)Syngenta Participations AG
(72)**Name of Inventor :**
1)PHADTE Mangala
2)WILLETTS Nigel James

(57) Abstract :
The present invention provides a compound of formula (I): R4 is of sub-formula (a) or (b): and wherein the other substituents are as defined in the specification. The compounds of formula (I) are useful as herbicides.

No. of Pages : 51 No. of Claims : 22

(12) PATENT APPLICATION PUBLICATION
(19) INDIA
(22) Date of filing of Application :16/04/2014
(21) Application No.3024/DELNP/2014 A
(43) Publication Date : 08/05/2015

(54) Title of the invention : TURN OFF OVERVOLTAGE LIMITING FOR IGBT

(51) International classification :H02M7/217
(31) Priority Document No :61/567800
(32) Priority Date :07/12/2011
(33) Name of priority country :U.S.A.
(86) International Application No :PCT/CA2012/001125
Filing Date :05/12/2012
(87) International Publication No :WO 2013/082705
(61) Patent of Addition to Application Number :NA
Filing Date :NA
(62) Divisional to Application Number :NA
Filing Date :NA

(71)**Name of Applicant :**
1)TM4 INC.
Address of Applicant :135 J. Armand Bombardier Bureau 25 Boucherville Qubec J4B 8P1 Canada
(72)**Name of Inventor :**
1)CYR Jean Marc
2)EL YACOUBI Maalainine
3)AMAR Mohammed
4)FLEURY Pascal

(57) Abstract :
A turn off overvoltage limiting for IGBT is described herein. The injection of a sample of the overvoltage across the IGBT in the gate drive to slow down the slope of the gate voltage decrease only during the overvoltage above a predetermined value is described herein. Techniques to increase the parasitic inductance to allow the control to limit an overvoltage at turn off of the second IGBT are also described herein.

No. of Pages : 27 No. of Claims : 13

(12) PATENT APPLICATION PUBLICATION
(19) INDIA
(22) Date of filing of Application :16/04/2014
(21) Application No.3025/DELNP/2014 A
(43) Publication Date : 08/05/2015

(54) Title of the invention : VEHICLE CHARGING SYSTEM AND METHOD FOR CHARGING VEHICLE

(51) International classification :H02J7/00,B60L11/18,H01M10/44
(31) Priority Document No :NA
(32) Priority Date :NA
(33) Name of priority country :NA
(86) International Application No :PCT/JP2011/073205
Filing Date :07/10/2011
(87) International Publication No :WO 2013/051151
(61) Patent of Addition to Application Number :NA
Filing Date :NA
(62) Divisional to Application Number :NA
Filing Date :NA

(71)**Name of Applicant :**
1)TOYOTA JIDOSHA KABUSHIKI KAISHA
Address of Applicant :1 Toyota cho Toyota shi Aichi 4718571 Japan
2)FUJI JUKOGYO KABUSHIKI KAISHA
(72)**Name of Inventor :**
1)MASUDA Tomokazu
2)HIDAKA Tatsuo
3)SHAMOTO Sumikazu
4)KANIE Naoki
5)MACHIDA Kiyohito
6)MATSUDA Kazuhiko

(57) Abstract :
When an external power source (402) and a vehicle (10) are joined A PLG ECU (170) executes a first charging operation for controlling a charger (160) until the state of charge of a power storage device (150) reaches a target value the target value being a state of charge lower than a predetermined fully charged state. After the state of charge reaches the target value the PLG ECU (170) stops charging the power storage device (150) and restarts charging of the power storage device (150) in order to execute a second charging operation for controlling the charger (160) so that the state of charge reaches the predetermined fully charged state at a scheduled charging completion time specified using an input unit (200).

No. of Pages : 40 No. of Claims : 6

(12) PATENT APPLICATION PUBLICATION
(19) INDIA
(22) Date of filing of Application :16/04/2014
(21) Application No.3026/DELNP/2014 A
(43) Publication Date : 08/05/2015

(54) Title of the invention : DYNAMIC RADIO CAPABILITIES BASED UPON AVAILABLE TRANSPORT BANDWIDTH

(51) International classification :H04B7/204,H04W16/02
(31) Priority Document No :61/548522
(32) Priority Date :18/10/2011
(33) Name of priority country :U.S.A.
(86) International Application No :PCT/IB2012/055633
Filing Date :17/10/2012
(87) International Publication No :WO 2013/057662
(61) Patent of Addition to Application Number :NA
Filing Date :NA
(62) Divisional to Application Number :NA
Filing Date :NA

(71)**Name of Applicant :**
1)TELEFONAKTIEBOLAGET L M ERICSSON (PUBL)
Address of Applicant :SE 164 83 Stockholm Sweden
(72)**Name of Inventor :**
1)SWARDH Richard
2)BOLTZ David
3)SUNDSTEDT Bo

(57) Abstract :
A monitor and control unit is described herein which is associated with a land based controller (e.g. base station controller) and one or more satellites where the monitor and control unit is arranged to dynamically configure mobile based controllers (e.g. radio base stations) located on mobile vessels (e.g. transport vessels cruise liners) to provide bandwidth (voice and data capabilities) based at least on the number of mobile vessels being served by each of the satellites.

No. of Pages : 30 No. of Claims : 20

(12) PATENT APPLICATION PUBLICATION
(19) INDIA
(22) Date of filing of Application :16/04/2014
(21) Application No.3027/DELNP/2014 A
(43) Publication Date : 08/05/2015

(54) Title of the invention : AN INFUSION FLUID WARMER

(51) International classification :A61M5/44
(31) Priority Document No :61/546779
(32) Priority Date :13/10/2011
(33) Name of priority country :U.S.A.
(86) International Application No :PCT/EP2012/069887
Filing Date :08/10/2012
(87) International Publication No :WO 2013/053674
(61) Patent of Addition to Application Number :NA
Filing Date :NA
(62) Divisional to Application Number :NA
Filing Date :NA

(71)**Name of Applicant :**
1)MEQU APS
Address of Applicant :Phistersvej 9 DK 2900 Hellerup Denmark
(72)**Name of Inventor :**
1)ANDERSEN Ulrik Krogh

(57) Abstract :
The present invention relates in one aspect to an infusion fluid warmer which comprises a casing shell having an upper wall structure and a lower opposing wall structure. The casing shell encloses a fluid channel or passage extending through the casing shell in between the upper and lower wall structures and fluid inlet and outlet ports coupled to opposite ends of the fluid channel or passage to allow a flow of infusion fluid through the casing shell. A housing shell is formed in a thermally conducting and electrically insulating material and a heating element is bonded to the housing shell and thermally coupled thereto. The fluid channel or passage extends through the housing shell or extends around the housing shell such that heat energy is transferred to the infusion fluid by direct physical contact with housing shell material.

No. of Pages : 37 No. of Claims : 22

(12) PATENT APPLICATION PUBLICATION
(21) Application No.310/DELNP/2012 A
(19) INDIA
(22) Date of filing of Application :11/01/2012
(43) Publication Date : 08/05/2015

(54) Title of the invention : COATED-SURFACE SLIDING PART HAVING EXCELLENT COATING ADHESION AND METHOD FOR PRODUCING THE SAME

(51) International classification :C22C 38/00
(31) Priority Document No :2009-166778
(32) Priority Date :15/07/2009
(33) Name of priority country :Japan
(86) International Application No :PCT/JP2010/061812
Filing Date :13/07/2010
(87) International Publication No :WO 2011/007770
(61) Patent of Addition to Application Number :NA
Filing Date :NA
(62) Divisional to Application Number :NA
Filing Date :NA

(71)**Name of Applicant :**
1)HITACHI TOOL ENGINEERING LTD.
Address of Applicant :2-1, SHIBAURA 1-CHOME, MINATO-KU, TOKYO, JAPAN
2)HITACHI METALS LTD.
(72)**Name of Inventor :**
1)HONDA FUMIAKI
2)YOKOYAMA KENJI
3)INOUE KENICHI
4)KUBOTA KUNICHIKA
5)UEHARA TOSHIHIRO
6)OHNO TAKEHIRO
7)OHISHI KATSUHIKO

(57) Abstract :
Provided is a coated-surface sliding part having excellent adhesion of a hard coating, and a method for producing the same part. The coated-surface sliding part is a sliding part wherein a hard coating is formed by physical deposition on the surface of a base material formed from, by mass percent, C 0.5 to 0.8%, Si 0.1 to 1.5%, Mn 0.2 to 1.0%, Cr 8.0 to 13.5%, Mo and/or W 0.5 to 4.0% in terms of (Mo+l/2W), and N 0.01 to 0.1%, with the remainder being Fe and impurities. The physically deposited coating is a titanium metal coating further covered by a diamond-like carbon coating. The method for producing a coated-surface part involves sputtering in order to apply the physically deposited coating, which consists of the titanium metal coating and then the diamond-like carbon coating which forms the surface layer, to the surface of the base material having the aforementioned composition. The base material is preferably subjected to argon gas bombardment prior to application of the physically deposited coating.

No. of Pages : 27 No. of Claims : 19

(12) PATENT APPLICATION PUBLICATION
(19) INDIA
(22) Date of filing of Application :10/01/2012
(21) Application No.283/DELNP/2012 A
(43) Publication Date : 08/05/2015

(54) Title of the invention : GEMSTONE ALIGNMENT

(51) International classification :B24B 9/16
(31) Priority Document No :0911 989.2
(32) Priority Date :10/07/2009
(33) Name of priority country :U.K.
(86) International Application No :PCT/GB2010/051117
Filing Date :07/07/2010
(87) International Publication No :WO 2011/004189
(61) Patent of Addition to Application Number :NA
Filing Date :NA
(62) Divisional to Application Number :NA
Filing Date :NA

(71)**Name of Applicant :**
1)DE BEERS CENTENARY AG
Address of Applicant :ALPENSTRASSE 5, LUCERNE 6, CH-6000, SWITZERLAND;
(72)**Name of Inventor :**
1)SMITH, JAMES GORDON, CHARTERS
2)POWELL, GRAHAM RALPH

(57) Abstract :
An apparatus and method for aligning a gemstone such as diamond (106) with a predetermined vertical axis (108) is described. The apparatus includes an upwardly extending nozzle (105) aligned with the vertical axis (108) and sized to allow the gemstone (106) to settle into it under the action of gravity so that the article is supported by the aperture. A fluid supply system supplies fluid to the nozzle (105) under sufficient pressure to support the article within or above the aperture. A fluid pressure control system controls the pressure of fluid supplied to the nozzle (105), so that it can be reduced gradually.

No. of Pages : 21 No. of Claims : 29

(12) PATENT APPLICATION PUBLICATION
(19) INDIA
(22) Date of filing of Application :11/01/2012
(21) Application No.296/DELNP/2012 A
(43) Publication Date : 08/05/2015

(54) Title of the invention : PROCESS FOR PRODUCING AND ASSEMBLING A MEDICAL OPERATIONS SYRINGE

(51) International classification :B29C 49/76
(31) Priority Document No :VI2009A000160
(32) Priority Date :03/07/2009
(33) Name of priority country :Italy
(86) International Application No :PCT/IT2010/000295
Filing Date :02/07/2010
(87) International Publication No :WO 2011/001456
(61) Patent of Addition to Application Number :NA
Filing Date :NA
(62) Divisional to Application Number :NA
Filing Date :NA

(71)**Name of Applicant :**
1)BREVETTI ANGELA S.R.L.
Address of Applicant :VIA DELL'INDUSTRIA, 99, 36071 ARZIGNANO (VI), ITALY
(72)**Name of Inventor :**
1)ROBERTO CONSOLARO
2)RAJEEV KABBUR

(57) Abstract :
A process for producing and assembling a medical operations syringe (20) comprising in the order the operations of extruding plastic material in order to obtain an intermediate tubular element (1) made of plastic material at least partially at molten state, performing on the intermediate tubular element (1) a blow moulding in order to obtain at least a hollow body (2), inserting firmly and at least partially a thrust piston (3) into the hollow body (2) immediately after the blow moulding operation.

No. of Pages : 20 No. of Claims : 15

(12) PATENT APPLICATION PUBLICATION
(19) INDIA
(22) Date of filing of Application :16/04/2014
(21) Application No.3028/DELNP/2014 A
(43) Publication Date : 08/05/2015

(54) Title of the invention : EPOXIDATION PROCESS WITH ADDED MODERATOR

(51) International classification :C07D301/10,C07D301/08
(31) Priority Document No :61/548502
(32) Priority Date :18/10/2011
(33) Name of priority country :U.S.A.
(86) International Application No :PCT/US2012/060482
Filing Date :17/10/2012
(87) International Publication No :WO 2013/059225
(61) Patent of Addition to Application Number :NA
Filing Date :NA
(62) Divisional to Application Number :NA
Filing Date :NA

(71)**Name of Applicant :**
1)AL AHMADI Hassan Eisa
Address of Applicant :2438 Cleveland Avenue Washington Township New Jersey 07676 U.S.A.
2)PADIA Ashok S.
(72)**Name of Inventor :**
1)AL AHMADI Hassan Eisa
2)PADIA Ashok S.

(57) Abstract :
A method for the epoxidation of an olefin comprising the steps of reacting a feed gas composition containing an olefin oxygen and a moderator having an optimal moderator concentration in the presence of an epoxidation catalyst at a first temperature and having a first selectivity; and increasing the optimal moderator concentration to a second moderator concentration and whereby the first selectivity is lowed to a second selectivity and the first temperature to a second temperature.

No. of Pages : 26 No. of Claims : 14

(12) PATENT APPLICATION PUBLICATION
(19) INDIA
(22) Date of filing of Application :16/04/2014
(21) Application No.3029/DELNP/2014 A
(43) Publication Date : 08/05/2015

(54) Title of the invention : BROWSER DEVICE ACCESS PROXY

(51) International classification :G06F21/00,G06F19/00,H04L12/18
(31) Priority Document No :11187029.1
(32) Priority Date :28/10/2011
(33) Name of priority country :EPO
(86) International Application No :PCT/EP2012/004366
Filing Date :18/10/2012
(87) International Publication No :WO 2013/060432
(61) Patent of Addition to Application Number :NA
Filing Date :NA
(62) Divisional to Application Number :NA
Filing Date :NA

(71)**Name of Applicant :**
1)TELEFONAKTIEBOLAGET L M ERICSSON (PUBL)
Address of Applicant :S 164 83 Stockholm Sweden
(72)**Name of Inventor :**
1)PERSSON Per
2)YUAN Song
3)OLSSON Magnus

(57) Abstract :
In a web browser (100) access is controlled with respect to at least one user data providing device (102) the web browser comprising a browser engine (106) a browser application (104) and a device access proxy DAP (108). Access is acquired in the DAP to at least one user data providing device and a request is received from a web application (110) for user data from a first user data providing device. In response to the request default data (112) is transmitted from the DAP to the web application. A user data access confirmation signal is obtained and in response to the user data access confirmation signal the transmission of the default data is discontinued and the requested user data is transmitted from the DAP to the web application.

No. of Pages : 18 No. of Claims : 15

(12) PATENT APPLICATION PUBLICATION
(19) INDIA
(22) Date of filing of Application :11/01/2012
(21) Application No.303/DELNP/2012 A
(43) Publication Date : 08/05/2015

(54) Title of the invention : METHODS AND COMPOSITIONS FOR TREATING AND PREVENTING DISEASE ASSOCIATED WITH αV5 INTEGRIN

(51) International classification :A61K 39/00
(31) Priority Document No :61/228,416
(32) Priority Date :24/07/2009
(33) Name of priority country :U.S.A.
(86) International Application No :PCT/US2010/043211
Filing Date :26/07/2010
(87) International Publication No :WO 2011/011775
(61) Patent of Addition to Application Number :NA
Filing Date :NA
(62) Divisional to Application Number :NA
Filing Date :NA

(71)**Name of Applicant :**
1)THE REGENTS OF THE UNIVERSITY OF CALIFORNIA
Address of Applicant :1111 FRANKLIN STREET, 12TH FLOOR, OAKLAND, CA 94607, UNITED STATES OF AMERICA
(72)**Name of Inventor :**
1)SHEPPARD, DEAN
2)SU, GEORGE
3)ATAKILIT, AMBA

(57) Abstract :
The present invention provides compositions and methods for treating and preventing disease associated with av5 integrin by blocking binding to av5 integrin. In particular, antibodies specific for av5 integrin are useful for preventing, treating, and reversing sepsis.

No. of Pages : 46 No. of Claims : 17

(12) PATENT APPLICATION PUBLICATION
(21) Application No.317/DELNP/2012 A
(19) INDIA
(22) Date of filing of Application :11/01/2012
(43) Publication Date : 08/05/2015

(54) Title of the invention : DISTRIBUTED RECORD SERVER ARCHITECTURE FOR RECORDING CALL SESSIONS OVER A VOIP NETWORK

(51) International classification :H04M 3/00
(31) Priority Document No :12/484,834
(32) Priority Date :15/06/2009
(33) Name of priority country :U.S.A.
(86) International Application No :PCT/US2010/034742
Filing Date :13/05/2010
(87) International Publication No :WO 2010/147721
(61) Patent of Addition to Application Number :NA
Filing Date :NA
(62) Divisional to Application Number :NA
Filing Date :NA

(71)**Name of Applicant :**
1)CALABRIO, INC.
Address of Applicant :605 HIGHWAY 169 NORTH, MINNEAPOLIS, MINNESOTA 55441, U.S.A.
(72)**Name of Inventor :**
1)MARTIN, II, JAMES PAUL

(57) Abstract :
Devices, systems, and methods for recording call sessions over a VoIP network using a distributed record server architecture are disclosed. An example recording device for recording segments of a call session includes a record server configured to receive an agent voice data stream and an external caller voice data stream from an agent telephone station, and a file repository configured to store voice data and call data associated with each recorded segment of the call session. The recording device is configured to tag recorded segments of each call session, which can be later used by a third-party application or database to check the status and/or integrity of the recorded call session.

No. of Pages : 45 No. of Claims : 20

(12) PATENT APPLICATION PUBLICATION
(21) Application No.101/DEL/2012 A
(19) INDIA
(22) Date of filing of Application :11/01/2012
(43) Publication Date : 08/05/2015

(54) Title of the invention : A FERMENTED IMMUNO-MODULATOR BEVERAGE AND PROCESS FOR THE PREPARATION THEREOF

(51) International classification :A23L
(31) Priority Document No :NA
(32) Priority Date :NA
(33) Name of priority country :NA
(86) International Application No :NA
Filing Date :NA
(87) International Publication No :NA
(61) Patent of Addition to Application Number :NA
Filing Date :NA
(62) Divisional to Application Number :NA
Filing Date :NA

(71)**Name of Applicant :**
1)AMITY UNIVERSITY
Address of Applicant :AMITY UNIVERSITY CAMPUS, SECTOR-125, NOIDA-201303, UP, INDIA Uttar Pradesh India
(72)**Name of Inventor :**
1)CHARU GUPTA
2)DHAN PRAKASH

(57) Abstract :
The present invention relates to a novel composition and process for the preparation of a nutritional refreshing fermented beverage fortified with antioxidants. The beverage composition essentially comprises powder of dry seed kernel of Trapa bispinosa, germinated and grounded seeds of pigeon pea/Arhar (Cajanus cajan), winged bean (Psophocarpus tetragonolobus) and Amaranth {Amaranthus hypochondriacus) mixed with sterilized water that is inoculated with the yoghurt culture. The fermented beverage is fortified with an herbal extract obtained from green pods of babul (Acacia arabica), roots of Ashwagandha (Withania somniferd), aerial parts of Punarnava (Boerhaavia diffusa) and Manduk parni (Centella asiatica), which is flavored with a spice mixture consisting of roasted and grounded cumin seed powder, mint, black pepper, rock-salt. Food grade preservatives are added to enhance the shelf life. The functional food product is antioxidant, immuno-modulator, thirst quenching, nutritious, has a high satiety value. The product has health-promoting effects through improvement of the intestinal micro-flora and modulation of the immune system. The method enables effective production of bioactive peptides that have useful functions such as antihypertensive, antithrombotic and antimicrobial in the fermented end product.

No. of Pages : 25 No. of Claims : 9

(12) PATENT APPLICATION PUBLICATION
(19) INDIA
(22) Date of filing of Application :16/04/2014
(21) Application No.3048/DELNP/2014 A
(43) Publication Date : 08/05/2015

(54) Title of the invention : VEHICLE CONTROL DEVICE

(51) International classification	:F02D29/02,F02D29/04,F16H61/02
(31) Priority Document No	:NA
(32) Priority Date	:NA
(33) Name of priority country	:NA
(86) International Application No	:PCT/JP2011/073848
Filing Date	:17/10/2011
(87) International Publication No	:WO 2013/057781
(61) Patent of Addition to Application Number	:NA
Filing Date	:NA
(62) Divisional to Application Number	:NA
Filing Date	:NA

(71)**Name of Applicant :**
1)TOYOTA JIDOSHA KABUSHIKI KAISHA
Address of Applicant :1 Toyota cho Toyota shi Aichi 4718571 Japan
(72)**Name of Inventor :**
1)YAMANAKA Satoshi
2)ITO Yoshio

(57) Abstract :
This vehicle control device is equipped with: an engine (3); a power transmission device (5) that transmits power from the engine (3) to the drive wheels (4); a mechanical pump (31) that supplies oil for operating the power transmission device (5) to the power transmission device (5) by means of the driving of the engine (3); and an electric pump (33) that supplies oil to the power transmission device (5) by means of the driving of a motor (32). In addition this vehicle control device is capable of executing a stopped economy running control wherein the engine (3) is stopped when the vehicle is stopped and a travel economy running control wherein the engine (3) is stopped while the vehicle is travelling. This vehicle control device is configured such that during the execution of stopped economy running control a learning control is implemented whereby a control value for controlling the oil pressure is updated such that the actual oil pressure generated by the electric pump (33) converges to a target value but during the execution of travel economy running control the learning control is prohibited. Thus it is possible to prevent mislearning of the characteristics of the electric pump.

No. of Pages : 43 No. of Claims : 6

(12) PATENT APPLICATION PUBLICATION
(21) Application No.3191/DEL/2012 A
(19) INDIA
(22) Date of filing of Application :12/10/2012
(43) Publication Date : 08/05/2015

(54) Title of the invention : WIRELESS ACCIDENT DETECTION, PREVENTION AND NAVIGATIONAL SYSTEM (WADPN)

(51) International classification	:H04N	(71)**Name of Applicant :**
(31) Priority Document No	:NA	**1)SACHIN MITTAL**
(32) Priority Date	:NA	Address of Applicant :B-6, JAYKAYPURAM, J.K. LAKHMI CEMENT, SIROHI, RAJASTHAN-307019. Rajasthan India
(33) Name of priority country	:NA	
(86) International Application No	:NA	(72)**Name of Inventor :**
Filing Date	:NA	**1)SACHIN MITTAL**
(87) International Publication No	: NA	
(61) Patent of Addition to Application Number	:NA	
Filing Date	:NA	
(62) Divisional to Application Number	:NA	
Filing Date	:NA	

(57) Abstract :
The invention relates generally to a system of precisely determining the actual position and state of a host vehicle operating on a course or path, such as, a high speed highway and/or in congested traffic and of multiple moving or fixed targets which represent any potential collision hazards with this host vehicle, and thus, generating displaying warning signals and avoidance instructions to avoid the collision and, in the absence of any effective timely action by host operator, automatically controlling the host vehicle to avoid any collisions or minimize any injuries and damage therefrom. Thus this invention comprises of a system which is highly effective in avoidance of the accidence and in any hazardous situations, it provides all the assistance with respect to medical aid, insurance aid ,police assistance etc in minimum time and reduces the risk(almost negligible)of any human or financial loss. More particularly, the invention relates to the use of a Global Positioning System (GPS),a differential GPS (DGPS),a Local or Psuedolite Positioning System (LPS or Psuedolite) etc for tracking the location of the moving object(vehicle) which will be monitored by a centralized data centre as well as by the driver with the help of screen displaying the current location. With this data and other with respect to the motion of the body, data centre will intimate the vehicle driver and device installed in the vehicle for any potential collision in the mere future (Next instance of time with respect to the time presently) in order to take measures to avoid any potential collision. In case of any negligence in taking avoidance measures from the driver end, the device with automatically take the decisions and will reduce or increase the speed of the vehicle etc for avoidance of any future collision or accident. The entire system and process is so efficient that its uptime of the network is very high and the entire communication is done through a secure gateway using security protocols like toos, diameter etc.

No. of Pages : 30 No. of Claims : 15

(12) PATENT APPLICATION PUBLICATION
(19) INDIA
(22) Date of filing of Application :12/01/2012
(21) Application No.113/DEL/2012 A
(43) Publication Date : 08/05/2015

(54) Title of the invention : AEROFOIL BLADE FOR AN AXIAL FLOW TURBOMACHINE

(51) International classification :B21J
(31) Priority Document No :11150847.9
(32) Priority Date :13/01/2011
(33) Name of priority country :EPO
(86) International Application No :NA
Filing Date :NA
(87) International Publication No :NA
(61) Patent of Addition to Application Number :NA
Filing Date :NA
(62) Divisional to Application Number :NA
Filing Date :NA

(71)**Name of Applicant :**
1)ALSTOM TECHNOLOGY LTD
Address of Applicant :BROWN BOVERI STRASSE 7, CH-5400 BADEN, SWITZERLAND
(72)**Name of Inventor :**
1)BRIAN ROBERT HALLER

(57) Abstract :
An aerofoil blade (30), for use as one of a ring of similar blades arranged in an axial flow turbomachine having an annular path for working fluid, has a radially inner platform region (32), a radially outer tip region (34), an axially forward leading edge (35) and an axially rearward trailing edge (36) which is straight between the platform region (32) and the tip region (34) and oriented radially of the annular path. The aerofoil blade (30) has a pressure surface (38) which is convex in the radial direction between the radially inner platform region (32) and the radially outer tip region (34) and a suction surface (40) which is concave in the radial direction between the radially inner platform region (32) and the radially outer tip region (34). The axial width (W) of the aerofoil blade (30), being the axial distance between the leading edge (35) and the straight trailing edge (36), varies parabolically between a maximum axial width (Wmax) at the platform and tip regions (32, 34) and a minimum axial width (Wmin) at a position between the platform region (32) and the tip region (34).

No. of Pages : 21 No. of Claims : 16

(12) PATENT APPLICATION PUBLICATION
(21) Application No.1490/DEL/2012 A
(19) INDIA
(22) Date of filing of Application :15/05/2012
(43) Publication Date : 08/05/2015

(54) Title of the invention : BODY COVER FOR MOTORCYCLE

(51) International classification	:B62J23/00
(31) Priority Document No	:2011-126434
(32) Priority Date	:06/06/2011
(33) Name of priority country	:Japan
(86) International Application No	:NA
Filing Date	:NA
(87) International Publication No	:NA
(61) Patent of Addition to Application Number	:NA
Filing Date	:NA
(62) Divisional to Application Number	:NA
Filing Date	:NA

(71)**Name of Applicant :**
1)HONDA MOTOR CO., LTD.
Address of Applicant :1-1, MINAMI-AOYAMA 2-CHOME, MINATO-KU, TOKYO 107-8556, JAPAN
(72)**Name of Inventor :**
1)KOTA TAKIZAWA
2)YUKIO HOSOYA
3)YASUSHI TATEISHI
4)GENICHI KITO

(57) Abstract :
In a body cover for a. motorcycle including: a leg shield; an inner cover integrally including a curved wall portion disposed behind a front wheel and a pair of sidewall portions bent from left and right side edges of the curved wall portion, extending rearward, and connected to both of left and right side edge portions of the leg shield from the front thereof; and a front cover covering a front end portion of a body frame at least from in front thereof, the rigidity of front edge parts of the sidewall portions of the inner cover is increased without increasing the number of parts. [Constitution] A front cover 31 integrally includes a front cover main portion 31a covering a front end portion of a body frame F from in front thereof and a pair of left and right downward extensions 3lb extending downward from both sides of the front cover main portion 31a to cover the front end portion of the body frame F from both the left and. right sides, and front edge parts of both the downward, extensions 31b extend along front edge parts of both the sidewall portions 30b of the inner cover 30 and abut on the front edge parts of both the sidewall portions 30b.

No. of Pages : 35 No. of Claims : 7

(12) PATENT APPLICATION PUBLICATION
(19) INDIA
(22) Date of filing of Application :15/04/2014
(21) Application No.3003/DELNP/2014 A
(43) Publication Date : 08/05/2015

(54) Title of the invention : TWO PART CRIMP CONTACT ELEMENT

(51) International classification :H01R13/20,H01R43/16,H01R13/11
(31) Priority Document No :10 2011 054 316.3
(32) Priority Date :07/10/2011
(33) Name of priority country :Germany
(86) International Application No :PCT/EP2012/069162
Filing Date :28/09/2012
(87) International Publication No :WO 2013/050299
(61) Patent of Addition to Application Number :NA
Filing Date :NA
(62) Divisional to Application Number :NA
Filing Date :NA

(71)**Name of Applicant :**
1)TYCO ELECTRONICS AMP GMBH
Address of Applicant :Amperestrasse 12 14 D 64625 Bensheim Germany
(72)**Name of Inventor :**
1)BLEICHER Martin
2)SINDER Josef
3)RAAB Stefan
4)EDER Manuel
5)GOEGELEIN Gerhard
6)KOEHNERT Erich
7)BRANDT Jochen
8)PROFF Manfred
9)UTZ Walter

(57) Abstract :
The invention relates to a two part crimped contact element (1). The invention further relates to a method for producing a two part crimped contact element (1). The invention further relates to a device for producing a two part crimped contact element (1). Previous crimped contact elements (1) comprising two portions (2 3) have a high transition resistance between the two portions (2 3) and insufficient mechanical stability. The crimped contact element (1) according to the invention overcomes these disadvantages by at least one pressure shaped connection element (17) being used to connect the two portions (2 3).

No. of Pages : 14 No. of Claims : 8

(12) PATENT APPLICATION PUBLICATION
(21) Application No.3223/DEL/2013 A
(19) INDIA
(22) Date of filing of Application :31/10/2013
(43) Publication Date : 08/05/2015

(54) Title of the invention : MARKED INTRODUCER NEEDLE FOR ULTRASOUND GUIDED CENTRAL VENOUS CATHETERIZATION

(51) International classification :A61B
(31) Priority Document No :NA
(32) Priority Date :NA
(33) Name of priority country :NA
(86) International Application No :NA
Filing Date :NA
(87) International Publication No : NA
(61) Patent of Addition to Application Number :NA
Filing Date :NA
(62) Divisional to Application Number :NA
Filing Date :NA

(71)**Name of Applicant :**
1)SANJAY GANDHI POSTGRADUATE INSTITUTE OF MEDICAL SCIENCES,
Address of Applicant :SANJAY GANDHI POSTGRADUATE INSTITUTE OF MEDICAL SCIENCES, RAEBARELI ROAD, LUCKNOW-226014, U.P., Uttar Pradesh India
(72)**Name of Inventor :**
1)DR. SINGH RATENDER KUMAR
2)DR. GHATAK TANMOY
3)DR. BARONIA ARVIND KUMAR

(57) Abstract :
The present Invention provides a device for ultrasound guided central venous cannulation. An introducer needle with indentations at 0.5 cm distance using a sterile scale is made. Each 0.5 cm is marked with single marking. Each one centimeter is marked as double marking. This marked introducer needle then provide a clear guide of the depth of the insertion. Introducer needle is used for locating the central vein in both static and real time ultrasound guided central venous cannulation. Intensivists currently use a completely unmarked approximately 6 cm long needle. Since in ultrasound, the tip of the needle is usually not distinctly visible, the chance of accidental mechanical complications (like pneumothorax or arterial puncture) continues to exist. Hence, when this needle is used in static or dynamic ultrasound technique, it will provide dual protection against any accidental punctures and thus further reduce existing mechanical complication rates of central venous cannulation.

No. of Pages : 6 No. of Claims : 3

(12) PATENT APPLICATION PUBLICATION
(19) INDIA
(22) Date of filing of Application :15/04/2014
(21) Application No.3009/DELNP/2014 A
(43) Publication Date : 08/05/2015

(54) Title of the invention : BENZOIC ACID BENZOIC ACID DERIVATIVES AND HETEROARYL CARBOXYLIC ACID CONJUGATES OF HYDROMORPHONE PRODRUGS METHODS OF MAKING AND USE THEREOF

(51) International classification :A61K31/485,C07D489/00
(31) Priority Document No :61/551600
(32) Priority Date :26/10/2011
(33) Name of priority country :U.S.A.
(86) International Application No :PCT/US2012/061813
Filing Date :25/10/2012
(87) International Publication No :WO 2013/063204
(61) Patent of Addition to Application Number :NA
Filing Date :NA
(62) Divisional to Application Number :NA
Filing Date :NA

(71)**Name of Applicant :**
1)KEMPHARM INC.
Address of Applicant :2656 Crosspark Road Suite 100 Coralville IA 52241 U.S.A.
(72)**Name of Inventor :**
1)MICKLE Travis
2)GUENTHER Sven
3)CHI Guochen
4)KANSKI Jaroslaw
5)MARTIN Andrea K.
6)BERA Bindu

(57) Abstract :
The presently described technology provides compositions comprising aryl carboxylic acids chemically conjugated to hydromorphone (4 5 a epoxy 3 hydroxy 17 methyl morphinan 6 one) to form novel prodrugs/compositions of hydromorphone. The hydromorphone prodrugs of the present technology have decreased side effects and decreased potential for abuse compared to unconjugated hydromorphone. The present technology also provides methods of treating patients pharmaceutical kits and methods of synthesizing conjugates of the present technology.

No. of Pages : 84 No. of Claims : 31

(12) PATENT APPLICATION PUBLICATION
(19) INDIA
(22) Date of filing of Application :11/01/2012
(21) Application No.301/DELNP/2012 A
(43) Publication Date : 08/05/2015

(54) Title of the invention : WIPER BLADE OF FLAT BAR DESIGN

(51) International classification :B60S 1/38
(31) Priority Document No :10 2009 028 233.5
(32) Priority Date :05/08/2009
(33) Name of priority country :Germany
(86) International Application No :PCT/EP2010/057870
Filing Date :07/06/2010
(87) International Publication No :WO 2011/015389
(61) Patent of Addition to Application Number :NA
Filing Date :NA
(62) Divisional to Application Number :NA
Filing Date :NA

(71)**Name of Applicant :**
1)ROBERT BOSCH GMBH
Address of Applicant :POSTFACH 30 02 20, 70442 STUTTGART, GERMANY
(72)**Name of Inventor :**
1)WILMS, CHRISTIAN
2)KISSELMANN, RUDI

(57) Abstract :
Described herein is a wiper blade (10) of flat bar design comprising a wiper strip (14). The wiper strip comprises a wiper lip (18) connected to a head strip (22) via a tilting web (20). The wiper blade (10) further comprises at least one pre-bent, elastic spring rail (46, 52, 54) acting as a supporting element, a connecting element (12), and a spoiler (32) having a flowing profile (34) and a holding profile (38). The spoiler (32) comprises, in the flowing profile (34) thereof, at least one longitudinal channel (44, 48, 50) with a spring rail (46, 52, 54), and in the holding profile (38) thereof, comprises at longitudinal sides thereof, free branches (42) opposite each other, directed inward, engaging into respective longitudinal grooves (24) of the head strip (22). The head strip (22) is free of spring rails, and, in particular, no spring rail (46, 52, 54) contacts the head strip (22).

No. of Pages : 10 No. of Claims : 10

(12) PATENT APPLICATION PUBLICATION
(19) INDIA
(22) Date of filing of Application :15/04/2014
(21) Application No.3010/DELNP/2014 A
(43) Publication Date : 08/05/2015

(54) Title of the invention : NOVEL PEPTIDE DERIVATIVES AS ANTIBIOTICS

(51) International classification :C07K7/00,C12P21/02,A61K38/04
(31) Priority Document No :11183034.5
(32) Priority Date :28/09/2011
(33) Name of priority country :EPO
(86) International Application No :PCT/EP2012/069166
Filing Date :28/09/2012
(87) International Publication No :WO 2013/045600
(61) Patent of Addition to Application Number :NA
Filing Date :NA
(62) Divisional to Application Number :NA
Filing Date :NA

(71)**Name of Applicant :**
1)NOSOPHARM
Address of Applicant :110 alle Charles Babbage Espace Innovation 2 F 30000 Nimes France
2)INSTITUT NATIONAL DE LA RECHERCHE AGRONOMIQUE
(72)**Name of Inventor :**
1)GUALTIERI Maxime
2)VILLAIN GUILLOT Philippe
3)GIVAUDAN Alain
4)PAGES Sylvie

(57) Abstract :
The present invention relates to antibiotic compounds methods for producing said compounds pharmaceutical compositions comprising said compounds and methods of treatment comprising administering said compounds and/or compositions comprising said compounds.

No. of Pages : 52 No. of Claims : 15

(12) PATENT APPLICATION PUBLICATION
(21) Application No.3233/DEL/2013 A
(19) INDIA
(22) Date of filing of Application :31/10/2013
(43) Publication Date : 08/05/2015

(54) Title of the invention : JUTE WATER FILTER

(51) International classification :H01L
(31) Priority Document No :NA
(32) Priority Date :NA
(33) Name of priority country :NA
(86) International Application No :NA
Filing Date :NA
(87) International Publication No : NA
(61) Patent of Addition to Application Number :NA
Filing Date :NA
(62) Divisional to Application Number :NA
Filing Date :NA

(71)**Name of Applicant :**
1)MULTAN SINGH
Address of Applicant :VILLAGE BASSI ISE KHAN, P.O. BANUR, S.A.S. NAGAR, DISTT. MOHALI, PUNJAB India
(72)**Name of Inventor :**
1)MULTAN SINGH

(57) Abstract :
A jute water filter is a unique water treatment system which removes impurities from the water through a combination of biological and physical processes that take place by rotating the water at high speed through eight curves of the body of the top section (1), middle section (2) and bottom section (3), and thereafter passes the water through jute string (15) attached with perforated pipe nipple (17) and perforated jute coil cover (14). The said device effectively removes heavy metals, turbidity, and other contaminants such as bacteria and viruses, reduces discoloration, odour, and unpleasant taste, decreases in the occurrence of fatal disease and an increase in general health. Due to their effectiveness, ease of use, and lack of recurring costs, jute water filter is a unique and an ideal technology for developing countries including India. At the top of the filter there is a tightly fitted transparent cover (4), which prevents contamination and unwanted pests from entering the filter. An angled elbow, which is assembled with inlet pipe nipple (7), diverts the direction of water towards surface of the said device, when water is poured into the filter. Water then rotates in the filter and travels through the jute string (15) which removes impurities like pathogens and suspended solids from the water and finally purified water moves towards outlet pipe nipple (10). Suspended solids and pathogens are physically trapped in the spaces between the jute strings (15). Over a time, sand, soil and other impurities which accumulated at the surface of the said device can be removed through scrubber pipe nipple by operating ball valve. The cleaning method is used to restore flow of water. This process is repeated until flow of water is restored completely. By using this novel device, the impurities of water can be removed effectively.

No. of Pages : 7 No. of Claims : 9

(12) PATENT APPLICATION PUBLICATION
(19) INDIA
(22) Date of filing of Application :11/01/2012
(21) Application No.307/DELNP/2012 A
(43) Publication Date : 08/05/2015

(54) Title of the invention : REDUNDANT COOLING METHOD AND SYSTEM

(51) International classification :F24F 11/02
(31) Priority Document No :12/508,429
(32) Priority Date :23/07/2009
(33) Name of priority country :U.S.A.
(86) International Application No :PCT/CN2010/075390
Filing Date :22/07/2010
(87) International Publication No :WO 2011/009411
(61) Patent of Addition to Application Number :NA
Filing Date :NA
(62) Divisional to Application Number :NA
Filing Date :NA

(71)**Name of Applicant :**
1)DAWES, WARWICK GRAHAM ANDREW
Address of Applicant :17D LONDON COURT, REALTY GARDENS, 41 CONDULT RD, MIDLEVELS, HONG KONG, CHINA
(72)**Name of Inventor :**
1)DAWES, WARWICK GRAHAM ANDREW

(57) Abstract :
A redundant cooling method and system are provided. The method comprises: providing a plurality of variable refrigerant flow air cooling units, wherein the number of air cooling units is at least one more than required to meet a selected maximum cooling load when operating the air cooling units at up to a maximum cooling capacity; coupling the plurality of variable refrigerant flow air cooling units in thermal communication with the air in a conditioned space; determining a select optimum operating condition for each of the plurality of variable refrigerant flow air cooling units which will result in about a lowest overall energy consumption for the redundant cooling system, while maintaining an average temperature of the air in the conditioned space at a required setpoint; and operating said plurality of air cooling units in about the select optimum operating conditions for each of the air cooling units.

No. of Pages : 38 No. of Claims : 20

(12) PATENT APPLICATION PUBLICATION
(19) INDIA
(22) Date of filing of Application :11/01/2012
(21) Application No.314/DELNP/2012 A
(43) Publication Date : 08/05/2015

(54) Title of the invention : BIOMASS GASIFICATION REACTOR

(51) International classification :F02B 43/08
(31) Priority Document No :12/493271
(32) Priority Date :29/06/2009
(33) Name of priority country :U.S.A.
(86) International Application No :PCT/US2010/039613
Filing Date :23/06/2010
(87) International Publication No :WO 2011/008446
(61) Patent of Addition to Application Number :NA
Filing Date :NA
(62) Divisional to Application Number :NA
Filing Date :NA

(71)**Name of Applicant :**
1)GENERAL ELECTRIC COMPANY
Address of Applicant :1 RIVER ROAD, SCHENECTADY, NEW YORK 12345, U.S.A.
(72)**Name of Inventor :**
1)LIU, KE
2)ZAMANSKY, VLADIMIR
3)ZHANG, LINGZHI

(57) Abstract :
In one aspect, the present invention provides a biomass gasifier comprising a reactor. The reactor includes (i) an inlet for biomass, (ii) an inlet for an oxygen - containing gas, (iii) an inlet for steam, (iv) an outlet for reactor product gas, (v) an outlet for ash, (vi) a biogas exit conduit coupled to the outlet for the reactor product gas and (vii) an inlet for a secondary oxygen source. The biogas exit conduit includes a catalytic partial oxidation unit, the catalytic partial oxidation unit is substantially restricting the biogas exit conduit. A system and method for biomass gasification is also provided.

No. of Pages : 22 No. of Claims : 21

(12) PATENT APPLICATION PUBLICATION
(21) Application No.3212/DEL/2013 A
(19) INDIA
(22) Date of filing of Application :30/10/2013
(43) Publication Date : 08/05/2015

(54) Title of the invention : A NOVEL EMBLEM MOUNTING FOR A VEHICLE TO. DIFFUSE EMBLEM REFLECTION

(51) International classification :B60R
(31) Priority Document No :NA
(32) Priority Date :NA
(33) Name of priority country :NA
(86) International Application No :NA
Filing Date :NA
(87) International Publication No : NA
(61) Patent of Addition to Application Number :NA
Filing Date :NA
(62) Divisional to Application Number :NA
Filing Date :NA

(71)**Name of Applicant :**
1)MARUTI SUZUKI INDIA LIMITED
Address of Applicant :1 NELSON MENDELA ROAD, VASANT KUNJ, NEW DELHI-110070, INDIA Delhi India
(72)**Name of Inventor :**
1)ARJUNJIT SINGH
2)RAJITH PJ

(57) Abstract :
This invention relates to a novel emblem mouriting for a vehicle to diffuse emblem reflection comprising of a reflector mounted with a lens provided with emblem, which is fitted on to body of vehicle, wherein back surface of the lens is provided with etching. The invention is associated with the following advantageous features:- - Cost effective. - Easy in manufacturing of tool without requiring machining. - Effectively prevents reflection of emblem on the reflector. - Avoids defect during manufacturing of lens, thereby preventing rejection of the same.

No. of Pages : 12 No. of Claims : 5

(12) PATENT APPLICATION PUBLICATION
(21) Application No.3213/DEL/2013 A
(19) INDIA
(22) Date of filing of Application :30/10/2013
(43) Publication Date : 08/05/2015

(54) Title of the invention : NOVEL ARRANGEMENT FOR CNG PRESSURE GAUGE IN VEHICLE

(51) International classification :F17C
(31) Priority Document No :NA
(32) Priority Date :NA
(33) Name of priority country :NA
(86) International Application No :NA
Filing Date :NA
(87) International Publication No : NA
(61) Patent of Addition to Application Number :NA
Filing Date :NA
(62) Divisional to Application Number :NA
Filing Date :NA

(71)**Name of Applicant :**
1)MARUTI SUZUKI INDIA LIMITED
Address of Applicant :1, NELSON MANDELA ROAD, VASANT KUNJ, NEW DELHI-110070, INDIA. Delhi India
(72)**Name of Inventor :**
1)ANIL KUMAR SAHU
2)NAVEEN TRIPATHI
3)SHRIGANESH UMBARKAR

(57) Abstract :
This invention relates to novel arrangement for CNG pressure gauge in vehicle comprising of a receptacle having filling valve for refueling connected to a pressure regulator through a valve integrated CNG tank by means of high pressure pipe, in which the regulator integrated with a high pressure lock off valve and a filter is provided for low pressure gas flow into engine of vehicle, wherein the pressure gauge is provided between the receptacle having filling valve and the CNG tank directly connected to said regulator. It is associated with the following advantageous features:- - Indication of pressure accurately without any pressure losses. - Dissipation of gas directly into the atmosphere without causing any fire in case of any leakage. - Reduced NR joints. - Simple fittings. - Ease of pressure check during filing of gas.

No. of Pages : 10 No. of Claims : 5

(12) PATENT APPLICATION PUBLICATION
(19) INDIA
(22) Date of filing of Application :01/05/2014
(21) Application No.3501/DELNP/2014 A
(43) Publication Date : 08/05/2015

(54) Title of the invention : AN AEROSOL GENERATING DEVICE WITH AIR FLOW NOZZLES

(51) International classification :A24F47/00,A61M15/06
(31) Priority Document No :11192698.6
(32) Priority Date :08/12/2011
(33) Name of priority country :EPO
(86) International Application No :PCT/EP2012/074518
Filing Date :05/12/2012
(87) International Publication No :WO 2013/083638
(61) Patent of Addition to Application Number :NA
Filing Date :NA
(62) Divisional to Application Number :NA
Filing Date :NA

(71)**Name of Applicant :**
1)PHILIP MORRIS PRODUCTS S.A.
Address of Applicant :Quai Jeanrenaud 3 CH 2000 Neuchatel Switzerland
(72)**Name of Inventor :**
1)DUBIEF Flavien

(57) Abstract :
There is provided an aerosol generating device comprising: a vaporizer for heating an aerosol-forming substrate (115, 415) to form an aerosol; a plurality of air flow nozzles (121, 421); and at least one air outlet (123, 423). The air flow nozzles (121, 421) and the air outlet (123, 423) are arranged to define an air flow route (127, 427) between the air flow nozzles (121, 421) and the air outlet (123, 423). Each of the air flow nozzles (121, 421) comprises an aperture arranged to direct air towards the vicinity in a direction across the surface of the vaporizer of the vaporizer so as to manage particle size in the aerosol.

No. of Pages : 29 No. of Claims : 15

(12) PATENT APPLICATION PUBLICATION
(19) INDIA
(22) Date of filing of Application :11/01/2012
(21) Application No.107/DEL/2012 A
(43) Publication Date : 08/05/2015

(54) Title of the invention : AMORPHOUS CORE MANUFACTURING METHOD AND MANUFACTURING APPARATUS

(51) International classification :B22B
(31) Priority Document No :2011-098566
(32) Priority Date :26/04/2011
(33) Name of priority country :Japan
(86) International Application No :NA
Filing Date :NA
(87) International Publication No :NA
(61) Patent of Addition to Application Number :NA
Filing Date :NA
(62) Divisional to Application Number :NA
Filing Date :NA

(71)**Name of Applicant :**
1)HITACHI INDUSTRIAL EQUIPMENT SYSTEMS CO., LTD.
Address of Applicant :3, KANDA NERIBEI-CHO, CHIYODA-KU, TOKYO 101-0022, JAPAN
(72)**Name of Inventor :**
1)NISHIMURA KAZUTAKA
2)ISHIZUKI JUNICHI
3)MARUYAMA EISUKE
4)INOUE KATSUAKI

(57) Abstract :
A cutting device of the present invention includes an upper blade, an upper blade fixing plate, a lower blade and a lower blade fixing plate, the upper blade is attached by being bolt-clamped and fixed to the upper blade fixing plate from the outer side and the lower blade is attached by being bolt-clamped and fixed to the lower blade fixing plate from the outer side in a direction opposite to an upper blade attaching direction, thereby to solve problems that cutting of an amorphous sheet material is adversely affected by worn-out upper and lower blades and a time is taken to insert a spacer for adjustment of a clearance between the upper and lower blades.

No. of Pages : 38 No. of Claims : 5

(12) PATENT APPLICATION PUBLICATION
(19) INDIA
(22) Date of filing of Application :11/01/2012
(21) Application No.109/DEL/2012 A
(43) Publication Date : 08/05/2015

(54) Title of the invention : A PROCESS FOR THE PREPARATION OF 2-SUBSTITUTED-5-CHLOROTHIAZOLE COMPOUNDS

(51) International classification :C07C
(31) Priority Document No :3124/96
(32) Priority Date :19/12/1996
(33) Name of priority country :Switzerland
(86) International Application No :NA
Filing Date :NA
(87) International Publication No : NA
(61) Patent of Addition to Application Number :NA
Filing Date :NA
(62) Divisional to Application Number :604/DEL/2001
Filed on :23/05/2001

(71)**Name of Applicant :**
1)SYNGENTA PARTICIPATIONS AG
Address of Applicant :SCHWARZWALDALLEE 215, CH-4058 BASEL, SWITZERLAND
(72)**Name of Inventor :**
1)THOMAS PITTERNA,
2)HENRY SZCZEPANSKI,
3)PETER MAINENFISCH,
4)OTTMAR FRANZ HUTER,
5)THOMAS REPOLD
6)MARCEL SENN,
7)THOMAS GOBEL;
8)ANTHONY CORNELIUS O'SULLIVAN,
9)GOTTFRIED SEIFERT,

(57) Abstract :
The present invention relates to a process for the preparation of 2-substituted-5-chlorothiazole compounds of the formula: in free form or in salt form, wherein Q, Y, Z, R1, R2, N, S and C1 as herein described in the specification.

No. of Pages : 47 No. of Claims : 9

(12) PATENT APPLICATION PUBLICATION
(19) INDIA
(22) Date of filing of Application :10/01/2012
(21) Application No.289/DELNP/2012 A
(43) Publication Date : 08/05/2015

(54) Title of the invention : PROCESS FOR THE PREPARATION OF PYRAZOLE CARBOXYLIC ACID AMIDES

(51) International classification :C07C 251/44
(31) Priority Document No :09167363.2
(32) Priority Date :06/08/2009
(33) Name of priority country :EUROPEAN UNION
(86) International Application No :PCT/EP2010/059703
Filing Date :07/07/2010
(87) International Publication No :WO 2011/015416
(61) Patent of Addition to Application Number :NA
Filing Date :NA
(62) Divisional to Application Number :NA
Filing Date :NA

(71)**Name of Applicant :**
1)SYNGENTA PARTICIPATIONS AG
Address of Applicant :SCHWARZWALDALLEE 215, CH-4058 BASEL SWITZERLAND.
(72)**Name of Inventor :**
1)GRIBKOV DENIS
2)MULLER ADRIAN
3)LAGGER MARTIN
4)GIORDANO FANNY

(57) Abstract :
The invention relates to a process for the preparation of 3- difluoromethyl-1-methyl-1H-pyrazole-4-carboxylic acid (9-dichloromethylene-1,2,3,4-tetrahydro-1,4-methano-naphthalen-5-yl)-amide.

No. of Pages : 23 No. of Claims : 8

(12) PATENT APPLICATION PUBLICATION
(19) INDIA
(22) Date of filing of Application :16/04/2014
(21) Application No.3022/DELNP/2014 A
(43) Publication Date : 08/05/2015

(54) Title of the invention : IMPROVING NON SPEECH CONTENT FOR LOW RATE CELP DECODER

(51) International classification :G10L19/14
(31) Priority Document No :61/555246
(32) Priority Date :03/11/2011
(33) Name of priority country :U.S.A.
(86) International Application No :PCT/CA2012/001011
Filing Date :01/11/2012
(87) International Publication No :WO 2013/063688
(61) Patent of Addition to Application Number :NA
Filing Date :NA
(62) Divisional to Application Number :NA
Filing Date :NA

(71)**Name of Applicant :**
1)VOICEAGE CORPORATION
Address of Applicant :750 Lucerne Road Suite 250 Town of Mount Royal Qubec H3R 2H6 Canada
(72)**Name of Inventor :**
1)VAILLANCOURT Tommy
2)JELINEK Milan

(57) Abstract :
A method and device for modifying a synthesis of a time domain excitation decoded by a time domain decoder wherein the synthesis of the decoded time domain excitation is classified into one of a number of categories. The decoded time domain excitation is converted into a frequency domain excitation and the frequency domain excitation is modified as a function of the category in which the synthesis of the decoded time domain excitation is classified. The modified frequency domain excitation is converted into a modified time domain excitation and a synthesis filter is supplied with the modified time domain excitation to produce a modified synthesis of the decoded time domain excitation.

No. of Pages : 42 No. of Claims : 32

(12) PATENT APPLICATION PUBLICATION
(19) INDIA
(22) Date of filing of Application :16/04/2014
(21) Application No.3023/DELNP/2014 A
(43) Publication Date : 08/05/2015

(54) Title of the invention : DEPRESSURIZATION SYSTEM FOR AN ELECTRICAL TRANSFORMER

(51) International classification :H02H7/04
(31) Priority Document No :61/545756
(32) Priority Date :11/10/2011
(33) Name of priority country :U.S.A.
(86) International Application No :PCT/US2012/059789
Filing Date :11/10/2012
(87) International Publication No :WO 2013/055942
(61) Patent of Addition to Application Number :NA
Filing Date :NA
(62) Divisional to Application Number :NA
Filing Date :NA

(71)**Name of Applicant :**
1)SENTRY DEPRESSURIZATION SYSTEMS INC.
Address of Applicant :23 Mariner Way Monsey NY 10952 U.S.A.
(72)**Name of Inventor :**
1)KENDRICK William R.

(57) Abstract :
A depressurization system for an electrical transformer includes a pressure release assembly configured to be in fluid communication with a chamber of the electrical transformer. The pressure release assembly includes a rupture pin valve. The system may include an evacuation assembly having a blast chamber. The rupture pin valve includes a pin configured to buckle in response to a predetermined pressure applied to a surface of the rupture pin valve.

No. of Pages : 26 No. of Claims : 20

(12) PATENT APPLICATION PUBLICATION
(21) Application No.37/DEL/2014 A
(19) INDIA
(22) Date of filing of Application :06/01/2014
(43) Publication Date : 08/05/2015

(54) Title of the invention : COATING COMPOSITION, DRUG-CONTAINING PARTICLE, SOLID PREPARATION AND METHOD FOR PREPARING DRUG-CONTAINING PARTICLE

(51) International classification	:A61K
(31) Priority Document No	:2013-003534
(32) Priority Date	:11/01/2013
(33) Name of priority country	:Japan
(86) International Application No	:NA
Filing Date	:NA
(87) International Publication No	: NA
(61) Patent of Addition to Application Number	:NA
Filing Date	:NA
(62) Divisional to Application Number	:NA
Filing Date	:NA

(71)**Name of Applicant :**
1)SHIN-ETSU CHEMICAL CO., LTD.
Address of Applicant :6-1, Otemachi 2-chome, Chiyoda-ku, Tokyo, JAPAN
(72)**Name of Inventor :**
1)YOKOSAWA ,Takuya
2)NISHIYAMA, Yuichi
3)MARUYAMA , Naosuke

(57) Abstract :
Provided are a drug-containing particle capable of suppressing dissolution of a drug in the oral cavity to suppress an unpleasant taste thereof and having excellent dissolution of the drug in the digestive tract after passing through the oral cavity; a method for preparing the drug-containing particle; a coating composition used for preparing the drug-containing particle; and a solid preparation comprising the drug-containing particle. More specifically, provided are a coating composition comprising 100 parts by weight of a cellulose-based enteric base and 50 parts by weight or less of a water-soluble cellulose ether; a drug-containing particle comprising a drug-containing core and a coat portion obtained by coating the core with the coating composition; a solid preparation comprising the drug-containing particle; and a method for preparing a drug-containing particle comprising a step of coating the drug-containing core with the coating composition.

No. of Pages : 24 No. of Claims : 10

(12) PATENT APPLICATION PUBLICATION
(19) INDIA
(22) Date of filing of Application :12/01/2012
(21) Application No.332/DELNP/2012 A
(43) Publication Date : 08/05/2015

(54) Title of the invention : METHOD FOR PRODUCING A BIODEGRADABLE MATERIAL

(51) International classification :C08L 99/00
(31) Priority Document No :09/03267
(32) Priority Date :03/07/2009
(33) Name of priority country :France
(86) International Application No :PCT/FR2010/051404
Filing Date :02/07/2010
(87) International Publication No :WO 2010/001128
(61) Patent of Addition to Application Number :NA
Filing Date :NA
(62) Divisional to Application Number :NA
Filing Date :NA

(71)**Name of Applicant :**
1)ULICE
Address of Applicant :ZAC LES PORTES DE RIOM, RUE GEORGE GERSHWIN, F-63200 RIOM, FRANCE
(72)**Name of Inventor :**
1)NADEGE LIBE
2)KAREINE RIGAL

(57) Abstract :
The invention relates to a method for developing a biodegradable material, produced from polymers and meal, wherein the meal is processed with a plasticizing agent in a double screw extruder having a diameter D, over a length of at least 6 D.

No. of Pages : 39 No. of Claims : 17

(12) PATENT APPLICATION PUBLICATION
(19) INDIA
(22) Date of filing of Application :12/01/2012
(21) Application No.346/DELNP/2012 A
(43) Publication Date : 08/05/2015

(54) Title of the invention : ENANTIO-AND STEREO-SPECIFIC SYNTHESES OF -AMINO-A-HYDROXY AMIDES

(51) International classification :C07C 315/00
(31) Priority Document No :61/229,613
(32) Priority Date :29/07/2009
(33) Name of priority country :U.S.A.
(86) International Application No :PCT/US210/043356
Filing Date :27/07/2010
(87) International Publication No :WO 2010/014494
(61) Patent of Addition to Application Number :NA
Filing Date :NA
(62) Divisional to Application Number :NA
Filing Date :NA

(71)**Name of Applicant :**
1)SCHERING CORPORATION
Address of Applicant :2000 GALLOPING HILL ROAD, KENILWORTH, NEW JERSEY 07033-0530 UNITED STATES OF AMERICA
(72)**Name of Inventor :**
1)TRAVERSE, JOHN
2)LEONG, WILLIAM, W.
3)MILLER, STEVEN, P.
4)ALBANEZE-WALKER, JENNIFER
5)HUNTER, THOMAS, J.
6)WANG, LIJUN
7)LIAO, HONGBIAO
8)ARASAPPAN, ASHOK
9)TRZASKA, SCOTT, T.
10)SMITH, RANDI, M.
11)LEKHAL, AZZEDDINE
12)BOGEN, STEPHANE, L.
13)KONG, JIANSHE
14)BENNETT, FRANK
15)NJOROGE, J., GEORGE
16)POIRIER, MARC
17)KUO, SHEN-CHUN
18)CHEN, YONGGANG
19)MATTHEWS, KENNETH S.
20)DEMONCHAUX, PATRICE
21)FERREIRA, AMADEO

(57) Abstract :
Processes useful for the preparation of a Compound of Formula I: Formula (I). Intermediates useful for the preparation of the compound of Formula I, and processes useful for preparing said intermediates are disclosed.

No. of Pages : 66 No. of Claims : 23

(12) PATENT APPLICATION PUBLICATION
(19) INDIA
(22) Date of filing of Application :06/06/2014
(21) Application No.4593/DELNP/2014 A
(43) Publication Date : 08/05/2015

(54) Title of the invention : A SHEET A METHOD OF MAKING AND USING A SHEET AS A LID FOR PACKAGES.

(51) International classification :B32B27/08,B32B27/32,B32B27/36
(31) Priority Document No :NA
(32) Priority Date :NA
(33) Name of priority country :NA
(86) International Application No :PCT/DK2011/000137
Filing Date :22/11/2011
(87) International Publication No :WO 2013/075713
(61) Patent of Addition to Application Number :NA
Filing Date :NA
(62) Divisional to Application Number :NA
Filing Date :NA

(71)**Name of Applicant :**
1)DANAPAK FLEXIBLES A/S
Address of Applicant :Strudsbergsvej 3 DK 4200 Slagelse Denmark
(72)**Name of Inventor :**
1)JOHANSEN Peter

(57) Abstract :
A sheet (2) is made by the method of the invention in particular for use for the punching of lids for containers in that a PE layer (5a) and a polyester (PET) welding layer (5b) of an amorphous polyester are applied to a base sheet layer (4) of polyester (PET) by coextrusion to form the finished sheet laminate (2). This ensures that the sheet (2) is transparent throughout just as it provides the possibility of controlled delamination by separation of the PE layer (5a) from the PET welding layer (5b) in the welding area only when the sheet (2) is pulled off a container (1). In addition the sheet does not curl when punched into lids prior to being applied to the containers (1).

No. of Pages : 13 No. of Claims : 6

(12) PATENT APPLICATION PUBLICATION
(21) Application No.4594/DELNP/2014 A
(19) INDIA
(22) Date of filing of Application :06/06/2014
(43) Publication Date : 08/05/2015

(54) Title of the invention : VALVE DEVICE METHOD FOR PRODUCING VALVE DEVICE AND METHOD FOR REPAIRING VALVE DEVICE

(51) International classification	:F16K1/32,C23C26/00,F16K1/36	(71)**Name of Applicant :**
(31) Priority Document No	:2011268737	**1)KABUSHIKI KAISHA TOSHIBA**
(32) Priority Date	:08/12/2011	Address of Applicant :1 1 Shibaura 1 chome Minato ku Tokyo 1058001 Japan
(33) Name of priority country	:Japan	(72)**Name of Inventor :**
(86) International Application No	:PCT/JP2012/081837	**1)SHINDO Osamu**
Filing Date	:07/12/2012	
(87) International Publication No	:WO 2013/085046	
(61) Patent of Addition to Application Number	:NA	
Filing Date	:NA	
(62) Divisional to Application Number	:NA	
Filing Date	:NA	

(57) Abstract :
According to an embodiment of the present invention a valve device (1) includes a movable member (9 or 5) that operates in conjunction with valve opening/closing and a stationary member (10 or 4 or 8) that makes sliding contact with or abuts against the movable member (9 or 5). The valve device (1) is integrally provided with a built up part (11 or 211) on a sliding contact surface or abutting section of the movable member (9 or 5) and/or the stationary member (10 or 4 or 8). The built up part (11 or 211) is formed by generating a pulsed discharge between a processed section of the movable member (9 or 5) or the stationary member (10 or 4 or 8) and an electrode (102) constituted of a molded body having a metal as the main component and welding and stacking the material of the electrode (102) onto the surface of the processed section.

No. of Pages : 51 No. of Claims : 12

(12) PATENT APPLICATION PUBLICATION
(19) INDIA
(22) Date of filing of Application :06/06/2014
(21) Application No.4595/DELNP/2014 A
(43) Publication Date : 08/05/2015

(54) Title of the invention : AUDIBLE DOCUMENT IDENTIFICATION FOR VISUALLY IMPAIRED PEOPLE

(51) International classification :G07D7/08
(31) Priority Document No :12001217.4
(32) Priority Date :23/02/2012
(33) Name of priority country :EPO
(86) International Application No :PCT/EP2013/052404
Filing Date :07/02/2013
(87) International Publication No :WO 2013/124160
(61) Patent of Addition to Application Number :NA
Filing Date :NA
(62) Divisional to Application Number :NA
Filing Date :NA

(71)**Name of Applicant :**
1)SICPA HOLDING SA
Address of Applicant :Avenue de Florissant 41 CH 1008 Prilly Switzerland
(72)**Name of Inventor :**
1)MULLER Edgar

(57) Abstract :
Disclosed is a document or article carrying information for the audible authentication of said document or article wherein the information is present in or on said document or article in the form of a frequency versus time spectral density function (spectrogram) the spectrogram being embodied using document security means. Disclosed are further a method for producing said document or article; a reader device for displaying audible authentication information from said document or article a method for authenticating said document or article and the use of a spectrogram for document authentication purposes.

No. of Pages : 36 No. of Claims : 18

(12) PATENT APPLICATION PUBLICATION
(19) INDIA
(22) Date of filing of Application :06/06/2014
(21) Application No.4596/DELNP/2014 A
(43) Publication Date : 08/05/2015

(54) Title of the invention : USE OF SILVER (I) COMPLEXES AS ANTICANCER AGENTS

(51) International classification :A61K33/38,A61K35/00
(31) Priority Document No :2011/08944
(32) Priority Date :06/12/2011
(33) Name of priority country :South Africa
(86) International Application No :PCT/IB2012/057029
Filing Date :06/12/2012
(87) International Publication No :WO 2013/084185
(61) Patent of Addition to Application Number :NA
Filing Date :NA
(62) Divisional to Application Number :NA
Filing Date :NA

(71)**Name of Applicant :**
1)UNIVERSITY OF JOHANNESBURG
Address of Applicant :Cnr Kingsway and University Roads Auckland Park 2006 Johannesburg South Africa
(72)**Name of Inventor :**
1)MEIJBOOM Reinout
2)CRONJ‰ Marianne Jacqueline

(57) Abstract :
The present invention relates to the use of silver(l) monophosphine complexes as Active Pharmaceutical Ingredients (API s) including anticancer agents for the treatment diagnosis and/or prevention of cancer. The present invention also relates to pharmaceutical compositions containing such complexes and further extends to a method of treating or diagnosing a subject/patient suffering from cancer.

No. of Pages : 127 No. of Claims : 20

(12) PATENT APPLICATION PUBLICATION
(19) INDIA
(22) Date of filing of Application :16/04/2014
(21) Application No.3019/DELNP/2014 A
(43) Publication Date : 08/05/2015

(54) Title of the invention : GAS INJECTION METHOD AND APPARATUS

(51) International classification :C02F3/12,C02F3/20,C02F3/16
(31) Priority Document No :61/565860
(32) Priority Date :01/12/2011
(33) Name of priority country :U.S.A.
(86) International Application No :PCT/US2012/066823
Filing Date :28/11/2012
(87) International Publication No :WO 2013/082132
(61) Patent of Addition to Application Number :NA
Filing Date :NA
(62) Divisional to Application Number :NA
Filing Date :NA

(71)**Name of Applicant :**
1)PRAXAIR TECHNOLOGY INC.
Address of Applicant :39 Old Ridgebury Road Danbury CT 06810 U.S.A.
(72)**Name of Inventor :**
1)FABIYI Malcolm E.
2)WATTANAPANOM Witawat
3)NOVAK Richard A.
4)CONNERY Karen

(57) Abstract :
A method and apparatus for injecting a gas into a liquid in which a rotating helical impeller (30) within a draft tube (20) submerged in the liquid creates a liquid flow within the draft tube. Gas bubbles are injected into the draft tube either above or below or alongside the helical impeller or in all three locations. The liquid is drawn into the draft tube with a superficial velocity greater than a substantially uniform terminal ascent velocity of the gas bubbles to allow entrainment ofundissolved gas bubbles in the bulk liquid into the liquid being drawn into the draft tube. The gas bubbles are injected with a uniform diameter of between about 10.0 microns and about 1.0 millimeters. The small bubble size enhances the dissolution of the gas into the liquid and also allow the entrainment of the gas into the liquid being drawn into the draft tube. The gas can be oxygen ozone or carbon dioxide.

No. of Pages : 24 No. of Claims : 12

(12) PATENT APPLICATION PUBLICATION
(21) Application No.302/DELNP/2012 A
(19) INDIA
(22) Date of filing of Application :11/01/2012
(43) Publication Date : 08/05/2015

(54) Title of the invention : MUTANT METHYLGLYOXAL SYNTHASE (MGS) FOR THE PRODUCTION OF A BIOCHEMICAL BY FERMENTATION

(51) International classification :C12N 9/00
(31) Priority Document No :09166815.2
(32) Priority Date :30/07/2009
(33) Name of priority country :EPO
(86) International Application No :PCT/EP2010/061094
Filing Date :30/07/2010
(87) International Publication No :WO 2011/012693
(61) Patent of Addition to Application Number :NA
Filing Date :NA
(62) Divisional to Application Number :NA
Filing Date :NA

(71)**Name of Applicant :**
1)METABOLIC EXPLORER
Address of Applicant :BIOPOLE CLERMONT-LIMAGNE, F-63360 SAINT BEAUZIRE, FRANCE
(72)**Name of Inventor :**
1)VOELKER, FRANCOIS
2)DUMON-SEIGNOVERT, LAURENCE
3)SOUCAILLE, PHILIPPE

(57) Abstract :
The present invention concerns a method for the production of a biochemical selected among lactic acid, acetol and 1,2-propanediol, comprising culturing a microorganism modified for an improved production of the biochemical selected among lactic acid, acetol and 1,2-propanediol in an appropriate culture medium and recovery of the desired biochemical which may be further purified wherein the microorganism expresses a methylglyoxal synthase (MGS) enzyme which activity is not inhibited by orthophosphate. The present invention concerns a mutant methylglyoxal synthase (MGS) comprising at least one amino acid residue in the protein sequence of the parent enzyme replaced by a different amino acid residue at the same position wherein - the mutant enzyme has retained more than 50% of the methylglyoxal synthase activity of the parent enzyme and - the methylglyoxal synthase activity of the mutant MGS is not inhibited by orthophosphate as compared to the parent enzyme.

No. of Pages : 81 No. of Claims : 29

(12) PATENT APPLICATION PUBLICATION
(21) Application No.3020/DELNP/2014 A
(19) INDIA
(22) Date of filing of Application :16/04/2014
(43) Publication Date : 08/05/2015

(54) Title of the invention : METHOD TO DETERMINE ZYGOSITY OF THE FAD2 GENE IN CANOLA USING END POINT PCR

(51) International classification :C12Q1/68,C07H21/04
(31) Priority Document No :61/550165
(32) Priority Date :21/10/2011
(33) Name of priority country :U.S.A.
(86) International Application No :PCT/US2012/060998
Filing Date :19/10/2012
(87) International Publication No :WO 2013/059576
(61) Patent of Addition to Application Number :NA
Filing Date :NA
(62) Divisional to Application Number :NA
Filing Date :NA

(71)**Name of Applicant :**
1)DOW AGROSCIENCES LLC
Address of Applicant :9330 Zionsville Road Indianapolis IN 46268 U.S.A.
(72)**Name of Inventor :**
1)UBAYASENA Lasantha Chandana
2)EHLERT Zoe
3)CHANNABASAVARADHYA Chandra Shekara A.

(57) Abstract :
The subject disclosure relates in part to endpoint PCR assays for the detection and high throughput zygosity analysis of the fad 2 gene in canola. The subject disclosure further relates in part to the use of wild type DNA as a reference for use in determining zygosity. These and other related procedures can be used to uniquely identify the zygosity and variety of canola lines comprising the subject gene. The subject disclosure also provides related kits for determining zygosity from a sample of a canola plant or seed for example.

No. of Pages : 39 No. of Claims : 16

(12) PATENT APPLICATION PUBLICATION
(19) INDIA
(22) Date of filing of Application :11/01/2012
(21) Application No.324/DELNP/2012 A
(43) Publication Date : 08/05/2015

(54) Title of the invention : PRODUCTION OF VIRAL CAPSIDS

(51) International classification :A61K
(31) Priority Document No :61/186,970
(32) Priority Date :15/06/2009
(33) Name of priority country :U.S.A.
(86) International Application No :PCT/GB2010/001183
Filing Date :15/06/2010
(87) International Publication No : NA
(61) Patent of Addition to Application Number :NA
Filing Date :NA
(62) Divisional to Application Number :NA
Filing Date :NA

(71)**Name of Applicant :**
1)Plant Bioscience Limited
Address of Applicant :Norwich Research Park Colney Lane Norwich Norfolk NR4 7UH UNITED KINGDOM
(72)**Name of Inventor :**
1)SAUNDERS Keith
2)LOMONOSSOFF George Peter
3)SAINSBURY Frank

(57) Abstract :
The invention provides methods of producing empty RNA virus capsids (e.g. from Cowpea mosaic virus) by assembly of viral small (S) and large (L) coat proteins in such a way that encapsidation of native viral RNA is avoided. Aspects of the invention employ in planta expression of capsid components from DNA vectors encoding the S and L proteins or S-L polyproteins including them. Such capsids have utility for the encapsidation or presentation of foreign proteins or desired payloads.

No. of Pages : 138 No. of Claims : 32

(12) PATENT APPLICATION PUBLICATION
(21) Application No.4603/DELNP/2014 A
(19) INDIA
(22) Date of filing of Application :06/06/2014
(43) Publication Date : 08/05/2015

(54) Title of the invention : HERBICIDAL COMPOSITION CONTAINING 4-AMINO-3-CHLORO-6-(4-CHLORO-2-FLUORO-3-METHOXYPHENYL)

(51) International classification :A01P13/00
(31) Priority Document No :61/567413
(32) Priority Date :06/12/2011
(33) Name of priority country :U.S.A.
(86) International Application No :PCT/US2012/067942
Filing Date :05/12/2012
(87) International Publication No :WO 2013/085991
(61) Patent of Addition to Application Number :NA
Filing Date :NA
(62) Divisional to Application Number :NA
Filing Date :NA

(71)**Name of Applicant :**
1)DOW AGROSCIENCES LLC
Address of Applicant :9330 Zionsville Road Indianapolis IN 46268 U.S.A.
(72)**Name of Inventor :**
1)OVALLE Daniel
2)CARRANZA GARZON Nelson M.
3)ROJAS CALVO Carlos E.
4)PANIAGUA Leonardo
5)REICHERT Alberto
6)MASTERS Robert A.

(57) Abstract :
Herbicidal compositions comprising and methods of controlling desirable vegetation utilizing 4-amino-3-chloro-6-(4- chloro-2-fluoro-3-methoxypheny 1)pyridine-2-carboxy lie acid or an agriculturally acceptable ester, amide, or salt thereof and (b) iluroxypyr or an agriculturally acceptable ester, amide, or salt thereof. The compositions may also contain an agriculturally accept - able adjuvant or carrier. The compositions and methods may also be employed in combination with known herbicide safeners, in - eluding, but not limited to, cloquintocet (e.g., acid or mexyl). The species spectra of the pyridine carboxylic acid of formula (I) or es - ter, amide, or salt thereof and fluroxypyr or ester, amide, or salt thereof, i.e., the weed species which the respective compounds control, are broad and highly complementary.

No. of Pages : 28 No. of Claims : 21

(12) PATENT APPLICATION PUBLICATION
(19) INDIA
(22) Date of filing of Application :16/04/2014
(21) Application No.3042/DELNP/2014 A
(43) Publication Date : 08/05/2015

(54) Title of the invention : PRESERVATIVE COMPOSITION FOR BEVERAGES AND SAUCES

(51) International classification :A23L1/24,A23L2/44,A23B7/153
(31) Priority Document No :1116433.2
(32) Priority Date :23/09/2011
(33) Name of priority country :U.K.
(86) International Application No :PCT/GB2012/000739
Filing Date :21/09/2012
(87) International Publication No :WO 2013/041830
(61) Patent of Addition to Application Number :NA
Filing Date :NA
(62) Divisional to Application Number :NA
Filing Date :NA

(71)**Name of Applicant :**
1)NATURAL BIOTECHNOLOGY SPRL
Address of Applicant :Rue du Li¨ge 1 B 6180 Courcelles Belgium
(72)**Name of Inventor :**
1)DODD Jeffrey Ian

(57) Abstract :
There is described a preservative composition for sterilizing beverages and/or sauces said preservative composition comprising a preservative effective amount of one or more of: an antioxidant; an acidulant; an antimicrobial agent; a clarifying agent; and a firming agent.

No. of Pages : 21 No. of Claims : 41

(12) PATENT APPLICATION PUBLICATION
(19) INDIA
(22) Date of filing of Application :11/01/2012
(21) Application No.311/DELNP/2012 A
(43) Publication Date : 08/05/2015

(54) Title of the invention : MATRIX CARRIER COMPOSITIONS, METHODS AND USES

(51) International classification :A61K 9/14
(31) Priority Document No :61/224,100
(32) Priority Date :09/07/2009
(33) Name of priority country :U.S.A.
(86) International Application No :PCT/IL2010/000551
Filing Date :08/07/2010
(87) International Publication No :WO 2011/004376
(61) Patent of Addition to Application Number :NA
Filing Date :NA
(62) Divisional to Application Number :NA
Filing Date :NA

(71)**Name of Applicant :**
1)OSHADI DRUG ADMINISTRATION LTD.
Address of Applicant :P.O. BOX 2042, 76120 REHOVOT,ISRAEL
(72)**Name of Inventor :**
1)VOL ALEXANDER
2)GRIBOVA ORNA

(57) Abstract :
Provided is a matrix carrier composition for use in pharmaceutical delivery system, the composition comprising an intermolecular association of at least a first solid phase comprising nanoparticles having hydrophobic surface, wherein the size of the nanoparticles is in the range of about 5-1000 nm, a second solid phase, comprising a biopolymer having hydrophilic and hydrophobic parts, and a continuous phase comprising oil associated with the first and said second solid phases.

No. of Pages : 69 No. of Claims : 60

(12) PATENT APPLICATION PUBLICATION
(21) Application No.326/DELNP/2012 A
(19) INDIA
(22) Date of filing of Application :11/01/2012
(43) Publication Date : 08/05/2015

(54) Title of the invention : CONTINUOUS FOOD FREEZING DEVICE AND CONTINUOUS FOOD FREEZING METHOD

(51) International classification :A23C
(31) Priority Document No :2009-004401
(32) Priority Date :26/06/2009
(33) Name of priority country :Japan
(86) International Application No :PCT/JP2010/004055
Filing Date :17/06/2010
(87) International Publication No : NA
(61) Patent of Addition to Application Number :NA
Filing Date :NA
(62) Divisional to Application Number :NA
Filing Date :NA

(71)**Name of Applicant :**
1)TECHNICAN CO. LTD.
Address of Applicant :3-1-16 Chigasaki-minami Tsuzuki-ku Yokohama-shi Kanagawa 2240037 Japan.
(72)**Name of Inventor :**
1)YAMADA Yoshio

(57) Abstract :
Provided is an apparatus and a method for freezing the foods at a high quality without reducing the freezing process efficiency. The continuous freezing apparatus 1 for foods freezes foods F as articles to be frozen that are fed continuously from the feed portion 2a while conveying them toward the discharge portion 2b and includes a mesh-like first conveyor 4 having one end thereof located on the feed portion 2a and conveying the foods F in a first direction from the one end to the other end a second conveyor 5 extending directly beneath the first conveyor 4 along thereof and conveying the foods fallen from the other end of the first conveyor 4 in a second direction opposite to the first direction a coolant tank 8 disposed directly beneath the second conveyor 5 and storing coolant S that freezes the foods F fallen from the second conveyor 5

No. of Pages : 20 No. of Claims : 11

(12) PATENT APPLICATION PUBLICATION
(19) INDIA
(22) Date of filing of Application :09/06/2014
(21) Application No.4643/DELNP/2014 A
(43) Publication Date : 08/05/2015

(54) Title of the invention : BASE CORNER PIECE FOR SINGLE HANDED MOUNTING ON A SWITCH CABINET

(51) International classification :H02B1/30
(31) Priority Document No :10 2012 001 097.4
(32) Priority Date :20/01/2012
(33) Name of priority country :Germany
(86) International Application No :PCT/DE2013/000013
Filing Date :11/01/2013
(87) International Publication No :WO 2013/107437
(61) Patent of Addition to Application Number :NA
Filing Date :NA
(62) Divisional to Application Number :NA
Filing Date :NA

(71)**Name of Applicant :**
1)RITTAL GMBH & CO. KG
Address of Applicant :Auf dem St¼tzelberg 35745 Herborn Germany
(72)**Name of Inventor :**
1)B–HME Siegfried
2)HOLIGHAUS Heiko
3)HOLKENBRINK Lars

(57) Abstract :
The invention relates to a base comer piece for single-handed mounting on a switch cabinet, comprising a supporting portion that can be screwed to a frame profile of the switch cabinet in a mounted position of the base comer piece, and is characterized in that the base comer piece has means for pre-mounting of the base comer piece on the frame profile in the mounted position, comprising means for spatial orientation of the base comer piece in relation to the frame profile and means for releasable latching of the base comer piece to the frame profile.

No. of Pages : 25 No. of Claims : 11

(12) PATENT APPLICATION PUBLICATION
(21) Application No.4644/DELNP/2014 A
(19) INDIA
(22) Date of filing of Application :09/06/2014
(43) Publication Date : 08/05/2015

(54) Title of the invention : FLOOR TRAP DEVICE

(51) International classification :E03C1/29,E03C1/28
(31) Priority Document No :2011086295
(32) Priority Date :21/11/2011
(33) Name of priority country :Singapore
(86) International Application No :PCT/SG2012/000432
Filing Date :19/11/2012
(87) International Publication No :WO 2013/077809
(61) Patent of Addition to Application Number :NA
Filing Date :NA
(62) Divisional to Application Number :NA
Filing Date :NA

(71)**Name of Applicant :**
1)PC ARCHITECTS
Address of Applicant :167 Geylang Road #04 01 Singapore 389242 Singapore
(72)**Name of Inventor :**
1)CHER Tse Suah

(57) Abstract :
A floor trap device and a method for prevention of fluid transmission can be provided. The fluid can be a gas or liquid. The floor trap device comprises an inlet for receiving liquid into the floor trap device; an outlet for transmitting liquid from the floor trap device; a chamber comprising a base trough portion the chamber for providing fluid communication from the inlet to the outlet; a dividing member extending into the chamber the dividing member arranged to divide the base trough portion into at least two sub chambers said sub chambers in fluid communication with each other; and wherein the sub chambers are capable of retaining liquid within the base trough portion.

No. of Pages : 24 No. of Claims : 25

(12) PATENT APPLICATION PUBLICATION
(21) Application No.3039/DELNP/2014 A
(19) INDIA
(22) Date of filing of Application :16/04/2014
(43) Publication Date : 08/05/2015

(54) Title of the invention : GATEWAY AND METHOD COMPUTER PROGRAM AND STORAGE MEANS CORRESPONDING THERETO

(51) International classification :H04L29/06
(31) Priority Document No :1159212
(32) Priority Date :12/10/2011
(33) Name of priority country :France
(86) International Application No :PCT/EP2012/069525
Filing Date :03/10/2012
(87) International Publication No :WO 2013/053628
(61) Patent of Addition to Application Number :NA
Filing Date :NA
(62) Divisional to Application Number :NA
Filing Date :NA

(71)**Name of Applicant :**
1)BROADPEAK
Address of Applicant :80 avenue des Buttes de Coesmes F 35700 Rennes France
(72)**Name of Inventor :**
1)DESMAUTS Jrmy
2)LE MANCQ Jacques
3)MARTIN Jean Fran§ois

(57) Abstract :
A gateway links a first communication network comprising at least one terminal intended to consume multimedia contents and a second communication network via which the gateway is intended to receive the multimedia contents in stream form. The gateway: detects (400) an implementation of point to point connection intended for a transmission of a multimedia content from an original server to a terminal via the gateway; searches (403) for a connection redirection rule as a function of information exchanged by the original server and the terminal; establishes (406) a point multipoint connection so as to receive the multimedia content; receives (407) the multimedia content in the form of a stream according to the point multipoint connection; and transmits (409) the multimedia content to the terminal in the form of a stream according to the point to point connection.

No. of Pages : 22 No. of Claims : 12

(12) PATENT APPLICATION PUBLICATION
(19) INDIA
(22) Date of filing of Application :11/01/2012
(21) Application No.304/DELNP/2012 A
(43) Publication Date : 08/05/2015

(54) Title of the invention : METHOD AND DEVICE FOR COUNTERACTIG WEAR AND TEAR AROUND A GUIDE VANE

(51) International classification :F03B 3/18
(31) Priority Document No :20092663
(32) Priority Date :14/07/2009
(33) Name of priority country :Norway
(86) International Application No :PCT/NO2010/000277
Filing Date :09/07/2010
(87) International Publication No :WO 2011/008105
(61) Patent of Addition to Application Number :NA
Filing Date :NA
(62) Divisional to Application Number :NA
Filing Date :NA

(71)**Name of Applicant :**
1)DYNAVEC AS
Address of Applicant :LIVBYGGET, N-7125 VANVIKAN, NORWAY
(72)**Name of Inventor :**
1)DAHLHAUG, OLE, GUNNAR

(57) Abstract :
A method and a device to counteract wear about a guide vane (16) from a particle bearing drive water, the guide vane (16) being arranged in a guide vane housing (14) in a water turbine (1), and where the method comprises: - routing a supply channel (36) for water cleaner than the drive water to the attachment point area between the guide vane (16) and the guide vane housing (14); and - leading water cleaner than the drive water to flow though a slit (28) where the slit (28) at least partly encircles the guide vane (16).

No. of Pages : 11 No. of Claims : 6

(12) PATENT APPLICATION PUBLICATION
(21) Application No.4640/DELNP/2014 A
(19) INDIA
(22) Date of filing of Application :09/06/2014
(43) Publication Date : 08/05/2015

(54) Title of the invention : SYNTHETIC RESIN CAP FOR CARBONATED BEVERAGE FILLED CONTAINER CLOSURE DEVICE AND BEVERAGE FILLED CLOSURE DEVICE

(51) International classification :B65D41/04
(31) Priority Document No :2011253824
(32) Priority Date :21/11/2011
(33) Name of priority country :Japan
(86) International Application No :PCT/JP2012/076204
Filing Date :10/10/2012
(87) International Publication No :WO 2013/077099
(61) Patent of Addition to Application Number :NA
Filing Date :NA
(62) Divisional to Application Number :NA
Filing Date :NA

(71)**Name of Applicant :**
1)CLOSURE SYSTEMS INTERNATIONAL JAPAN LIMITED
Address of Applicant :2 8 Toranomon 1 chome Minato ku Tokyo 1050001 Japan
(72)**Name of Inventor :**
1)TSUZUKI Mitsuo
2)TAKAZAWA Fuminori
3)YAMAMOTO Shoji

(57) Abstract :
A synthetic resin cap fitted on the mouth section of a container filled with a carbonated beverage. The cap is provided with a top plate and a cylindrical section extending down from the rim thereof. On the inner surface of the top plate a ring shaped inner seal projection that is fitted inside the mouth section and an outer seal projection that abuts the outer surface of the mouth section are formed. On the outer surface of the inner seal projection a ring shaped contacting protrusion that contacts the inner surface of the mouth section is formed. The outer seal projection has an inner surface the internal diameter of which decreases towards the leading edge and the smallest internal diameter section which is the lower end of the inner surface contacts the outer surface of the mouth section at a position that is towards the container body side and is at a distance from the open end.

No. of Pages : 31 No. of Claims : 9

(12) PATENT APPLICATION PUBLICATION
(19) INDIA
(22) Date of filing of Application :09/06/2014
(21) Application No.4641/DELNP/2014 A
(43) Publication Date : 08/05/2015

(54) Title of the invention : METHIONINE COMPOUND INTENDED FOR ANIMAL FEED

(51) International classification :C07C319/28,C07C323/58,A23K1/16
(31) Priority Document No :1161336
(32) Priority Date :08/12/2011
(33) Name of priority country :France
(86) International Application No :PCT/FR2012/052843
Filing Date :07/12/2012
(87) International Publication No :WO 2013/083934
(61) Patent of Addition to Application Number :NA
Filing Date :NA
(62) Divisional to Application Number :NA
Filing Date :NA

(71)**Name of Applicant :**
1)ROQUETTE FRERES
Address of Applicant :1 rue de la Haute Loge F 62136 Lestrem France
(72)**Name of Inventor :**
1)FIEY Guillaume

(57) Abstract :
The present invention relates to a novel liquid methionine compound originating from the mother liquor from the crystallisation of methionine produced by fermentation comprising between 30 and 50% methionine by weight and having a dry matter of between 20% and 75% by weight and characterised in that said compound also comprises less than 0.5% by weight of isoleucine and between 0.9% and 1.3% of N acetyl methionine.

No. of Pages : 14 No. of Claims : 7

(12) PATENT APPLICATION PUBLICATION
(21) Application No.4642/DELNP/2014 A
(19) INDIA
(22) Date of filing of Application :09/06/2014
(43) Publication Date : 08/05/2015

(54) Title of the invention : MALIGNANT TUMOR TREATMENT AGENT AND FOOD AND DRINK INCLUDING SAME

(51) International classification :A61K36/00,A23L1/29,A23L2/52
(31) Priority Document No :2011246976
(32) Priority Date :10/11/2011
(33) Name of priority country :Japan
(86) International Application No :PCT/JP2012/079877
Filing Date :12/11/2012
(87) International Publication No :WO 2013/069821
(61) Patent of Addition to Application Number :NA
Filing Date :NA
(62) Divisional to Application Number :NA
Filing Date :NA

(71)**Name of Applicant :**
1)TANI Michio
Address of Applicant :19 18 Jiyugaoka 1 chome Meguro ku Tokyo 1520035 Japan
(72)**Name of Inventor :**
1)TANI Michio

(57) Abstract :
It is an object of the present invention to provide a malignant tumor treatment agent that causes no serious side effects as seen in medicine and is highly safe even in long term daily use because it is made of food material(s) while being superior to the capabilities of the conventional malignant tumor treatment agents and food and drink including the same. A malignant tumor treatment agent comprising as an active ingredient a mixture obtained by mixing together MUGI KOJI (koji malt) SHIITAKE mushroom (Lentinula edodes) coix seed cacao nutmeg coffee gansun (bamboo shoots) parsley stevia and mint. The malignant tumor treatment agent of the present invention and the food and drink including the same show significant effects on malignant tumor treatment.
Furthermore because the food materials are used as raw material the treatment agent and the food and drink cause no serious side effects as seen in radiation therapy and chemotherapy and are highly safe. In addition the food and drink of the present invention can be used to continuously treatment malignant tumor in daily life.

No. of Pages : 17 No. of Claims : 5

(12) PATENT APPLICATION PUBLICATION
(21) Application No.4645/DELNP/2014 A
(19) INDIA
(22) Date of filing of Application :09/06/2014
(43) Publication Date : 08/05/2015

(54) Title of the invention : BIFUNCTIONAL OLIGONUCLEOTIDE PROBE FOR UNIVERSAL REAL TIME MULTIANALYTE DETECTION

(51) International classification :C12Q1/68
(31) Priority Document No :102011055247.2
(32) Priority Date :10/11/2011
(33) Name of priority country :Germany
(86) International Application No :PCT/EP2012/072402
Filing Date :12/11/2012
(87) International Publication No :WO 2013/079307
(61) Patent of Addition to Application Number :NA
Filing Date :NA
(62) Divisional to Application Number :NA
Filing Date :NA

(71)**Name of Applicant :**
1)ALBERT LUDWIGS UNIVERSIT„T FREIBURG
Address of Applicant :Fahnenbergplatz 79085 Freiburg Germany
(72)**Name of Inventor :**
1)ROTH G¼nter
2)FALTIN Bernd
3)VON STETTEN Felix
4)WADLE Simon

(57) Abstract :
The invention relates to a mediator probe which comprises a probe region and a mediator region. The invention further relates to a system comprising a mediator probe and a detection molecule to the use of said system and to a method for detecting at least one target molecule.

No. of Pages : 103 No. of Claims : 34

(12) PATENT APPLICATION PUBLICATION
(19) INDIA
(22) Date of filing of Application :07/10/2014
(21) Application No.8340/DELNP/2014 A
(43) Publication Date : 08/05/2015

(54) Title of the invention : PHOTOVOLTAIC THIN FILM SOLAR MODULES AND METHOD FOR PRODUCING SUCH THIN FILM SOLAR MODULES

(51) International classification :H01L27/142,H01L31/0392,H01L31/0749
(31) Priority Document No :10 2012 205 978.4
(32) Priority Date :12/04/2012
(33) Name of priority country :Germany
(86) International Application No :PCT/EP2013/056767
Filing Date :28/03/2013
(87) International Publication No :WO 2013/152965
(61) Patent of Addition to Application Number :NA
Filing Date :NA
(62) Divisional to Application Number :NA
Filing Date :NA

(71)**Name of Applicant :**
1)ROBERT BOSCH GMBH
Address of Applicant :Postfach 30 02 20 70442 Stuttgart Germany
(72)**Name of Inventor :**
1)PROBST Volker

(57) Abstract :
The invention relates to a photovoltaic thin film solar module in particular a thin film solar module having a chalcopyrite or kesterite semiconductor absorber layer. A rear electrode layer (4) an electrically conductive barrier layer (6) an ohmic contact layer (8) a semiconductor absorber layer (10) buffer layers (12 14) and a front electrode layer (10) are provided on a glass substrate (2). A series connection of thin film solar cells within a module is achieved in a production method according to the invention in that the separation trenches (16 20 24) are inserted only after the complete application of the layers (4 6 8 10 12 14 22) of the thin film solar module. The separation trench (16) is filled with insulating material (18). The separation trench (20) is subsequently filled with a highly conductive material and an electrically conductive bridge (28) is arranged for the serial electrical connection of the front electrode layer (22) of a solar cell with the rear electrode (4 6 8) of an adjacent solar cell. By means of the method according to the invention the cellular and modular format can be varied in wide ranges also in mass production and corrosion in the separation trenches is prevented by the application of the semiconductor absorber layer.

No. of Pages : 63 No. of Claims : 45

(12) PATENT APPLICATION PUBLICATION
(19) INDIA
(22) Date of filing of Application :07/10/2014
(21) Application No.8341/DELNP/2014 A
(43) Publication Date : 08/05/2015

(54) Title of the invention : PRESSURE RELIEF DEVICE FOR PRESSURIZED CONTAINER

(51) International classification :B65D83/70,F16K17/16
(31) Priority Document No :61/663924
(32) Priority Date :25/06/2012
(33) Name of priority country :U.S.A.
(86) International Application No :PCT/US2013/047213
Filing Date :23/06/2013
(87) International Publication No :WO 2014/008014
(61) Patent of Addition to Application Number :NA
Filing Date :NA
(62) Divisional to Application Number :NA
Filing Date :NA

(71)**Name of Applicant :**
1)ILLINOIS TOOL WORKS INC.
Address of Applicant :155 Harlem Avenue Glenview Illinois 60025 U.S.A.
(72)**Name of Inventor :**
1)HENRY Richard A.
2)FERREIRA Mark A.
3)WOWCZUK Yurij F.

(57) Abstract :
A pressure relief device (16) for venting an internally pressurized container (10)and an aerosol can having a can bottom containing this pressure relief device. The pressure release device (16) includes a coined pressure vent (30 within a domed can bottom. The pressure vent is characterized by a venting pressure greater than about 500 psig. In addition the can bottom resists eversion and/or failure along the mechanical attachment to the container body (12) at all pressures between the venting pressure and the longitudinal rupture pressure in the container body.

No. of Pages : 19 No. of Claims : 20

(12) PATENT APPLICATION PUBLICATION
(19) INDIA
(22) Date of filing of Application :07/10/2014
(21) Application No.8342/DELNP/2014 A
(43) Publication Date : 08/05/2015

(54) Title of the invention : ALERT DIRECTIVES AND FOCUSED ALERT DIRECTIVES IN A BEHAVIORAL RECOGNITION SYSTEM

(51) International classification	:G08B21/02,G08B21/18,G08B13/196
(31) Priority Document No	:61/611284
(32) Priority Date	:15/03/2012
(33) Name of priority country	:U.S.A.
(86) International Application No	:PCT/US2013/032075
Filing Date	:15/03/2013
(87) International Publication No	:WO 2013/138719
(61) Patent of Addition to Application Number	:NA
Filing Date	:NA
(62) Divisional to Application Number	:NA
Filing Date	:NA

(71)**Name of Applicant :**
1)BEHAVIORAL RECOGNITION SYSTEMS INC.
Address of Applicant :2100 West Loop South Houston Texas 77027 U.S.A.
(72)**Name of Inventor :**
1)COBB Wesley Kenneth
2)SEOW Ming Jung
3)XU Gang
4)SAITWAL Kishor Adinath
5)AKINS Anthony
6)JOSEPH Kerry
7)URECH Dennis

(57) Abstract :
Alert directives and focused alert directives allow a user to provide feedback to a behavioral recognition system to always or never publish an alert for certain events. Such an approach bypasses the normal publication methods of the behavioral recognition system yet does not obstruct the system s learning procedures.

No. of Pages : 33 No. of Claims : 14

(12) PATENT APPLICATION PUBLICATION
(19) INDIA
(22) Date of filing of Application :07/10/2014
(21) Application No.8343/DELNP/2014 A
(43) Publication Date : 08/05/2015

(54) Title of the invention : PARTIAL MAP UPDATES

(51) International classification :G01C21/32
(31) Priority Document No :NA
(32) Priority Date :NA
(33) Name of priority country :NA
(86) International Application No :PCT/CN2012/072469
Filing Date :16/03/2012
(87) International Publication No :WO 2013/134959
(61) Patent of Addition to Application Number :NA
Filing Date :NA
(62) Divisional to Application Number :NA
Filing Date :NA

(71)**Name of Applicant :**
1)QOROS AUTOMOTIVE CO. LTD.
Address of Applicant :Room 501 Binjiang International Building No. 88 Tonggang Road Changshu City Economic Development Area Jiangsu 215513 China
(72)**Name of Inventor :**
1)PANG Eric HC
2)VILLANTI Stefano

(57) Abstract :
A method implemented in a computer system may comprise maintaining by the computer system map data divided into at least a first pre selected map portion and a second pre selected map portion different from the first pre selected map portion. The computer system may receive a request for transmission of the first pre selected map portion to a vehicle navigation unit and transmit a payment request indicating a payment amount associated with the first pre selected map portion. The computer system may also receive an indication of payment of the payment amount and transmit over a wireless network the first pre selected map portion to the vehicle navigation unit.

No. of Pages : 45 No. of Claims : 23

(12) PATENT APPLICATION PUBLICATION
(19) INDIA
(22) Date of filing of Application :16/04/2014
(21) Application No.3031/DELNP/2014 A
(43) Publication Date : 08/05/2015

(54) Title of the invention : TENSIONER

(51) International classification :F16H7/12,F16H7/08
(31) Priority Document No :201110352533.2
(32) Priority Date :29/10/2011
(33) Name of priority country :China
(86) International Application No :PCT/CN2012/083467
Filing Date :25/10/2012
(87) International Publication No :WO 2013/060276
(61) Patent of Addition to Application Number :NA
Filing Date :NA
(62) Divisional to Application Number :NA
Filing Date :NA

(71)**Name of Applicant :**
1)THE GATES CORPORATION
Address of Applicant :1551 Wewatta Street Denver CO 80202 U.S.A.
(72)**Name of Inventor :**
1)HAO Minchun
2)FU Hongliang
3)ZHANG Yuhong

(57) Abstract :
A tensioner (20) comprising a base (24) a cantilever (26) arranged on the base (24) and rotates around a first center axis relative to the base (24) a flexible element (48) arranged between the base (24) and the cantilever (26) where the flexible element (48) is used for swaying the cantilever (26) thus allowing the cantilever (26) to rotate relative to the base (24) and a friction apparatus (54) arranged between the flexible element (48) and the base (24) or the cantilever (26) where the friction apparatus (54) buffers the relative motion between the cantilever (26) and the base (24) and where the flexible element (48) applies a first pressure along a radial direction onto the friction apparatus (54) thus allowing the friction apparatus (54) to generate a first frictional force between the base (24) and the cantilever (26). The tensioner (20) also comprises a supporting block. The supporting block applies a second pressure along the radial direction onto the friction apparatus (54) thus allowing the friction apparatus (54) to generate a second frictional force between the base (24) and the cantilever (26). Under the joint action of the first frictional force and the second frictional force the rotation of the cantilever (26) relative to the base (24) is buffered. The cantilever (20) provides increased friction damping.

No. of Pages : 29 No. of Claims : 16

(12) PATENT APPLICATION PUBLICATION
(21) Application No.3032/DELNP/2014 A
(19) INDIA
(22) Date of filing of Application :16/04/2014
(43) Publication Date : 08/05/2015

(54) Title of the invention : METHOD AND SYSTEM FOR TREATING CARBON GASES BY ELECTROCHEMICAL HYDROGENATION IN ORDER TO OBTAIN A CXHYOZ COMPOUND

(51) International classification :C25B1/04,C25B15/00,C25B15/08
(31) Priority Document No :1159223
(32) Priority Date :12/10/2011
(33) Name of priority country :France
(86) International Application No :PCT/FR2012/052319
Filing Date :11/10/2012
(87) International Publication No :WO 2013/054053
(61) Patent of Addition to Application Number :NA
Filing Date :NA
(62) Divisional to Application Number :NA
Filing Date :NA

(71)**Name of Applicant :**
1)AREVA
Address of Applicant :33 Rue La Fayette F 75009 Paris France
(72)**Name of Inventor :**
1)SALA Batrice
2)GRASSET Frdric
3)LACROIX Olivier
4)SIRAT Abdelkader
5)TETARD Elodie
6)RAHMOUNI Kamal
7)MAZOYER Joel

(57) Abstract :
The present invention relates to a method for treating CO by electrochemical hydrogenation said method comprising: a step of transferring heat from a heating means (160) towards a proton conductive electrolyser (110) such that said electrolyser (110) reaches an operating temperature suitable for electrolysing steam; a step of feeding the CO produced by said heating means (160) at the cathode of the electrolyser; a step of feeding the steam at the anode; a step of oxidising the steam at the anode; a step of generating protonated species in the membrane with proton conduction; a step of migrating said protonated species into said proton conductive membrane; a step of reducing said protonated species on the surface of the cathode into reactive hydrogen atoms; and a step of hydrogenating the CO on the surface of the cathode of the electrolyser (110) by means of said reactive hydrogen atoms said hydrogenation step enabling the formation of CHO compounds where x=1; 0<y=(2x+2) and 0=z=2x.

No. of Pages : 22 No. of Claims : 16

(12) PATENT APPLICATION PUBLICATION
(21) Application No.8350/DELNP/2014 A
(19) INDIA
(22) Date of filing of Application :08/10/2014
(43) Publication Date : 08/05/2015

(54) Title of the invention : A RUBBISH COLLECTION TROLLEY

(51) International classification :B65F1/14,B65F1/16
(31) Priority Document No :1206108.1
(32) Priority Date :05/04/2012
(33) Name of priority country :U.K.
(86) International Application No :PCT/GB2013/000149
Filing Date :03/04/2013
(87) International Publication No :WO 2013/150259
(61) Patent of Addition to Application Number :NA
Filing Date :NA
(62) Divisional to Application Number :NA
Filing Date :NA

(71)**Name of Applicant :**
1)GALIMBERTI Massimo
Address of Applicant :56 Kings Grove London SE15 2NB U.K.
(72)**Name of Inventor :**
1)GALIMBERTI Massimo

(57) Abstract :
The trolley (2) comprises a horizontal tray (14 18) comprising a plurality of horizontal apertures each aperture comprising a rubbish bag (19 20) held therein by its edges (22) between a tray base (14) and tray cover (18) that snap together. Before use the rubbish bags (19 20) are contained within the horizontal tray (14 18) and are freed to hang vertically within the trolley (2) when in use. The trolley (2) comprises a retractable lid (6) which covers the tray assembly (14 18) when the trolley (2) is not in use. A liquid waste container (21) also fits into the tray (14 18) and is independently removable for emptying without removing the rubbish bags (19 20).

No. of Pages : 21 No. of Claims : 11

(12) PATENT APPLICATION PUBLICATION
(19) INDIA
(22) Date of filing of Application :08/10/2014
(21) Application No.8351/DELNP/2014 A
(43) Publication Date : 08/05/2015

(54) Title of the invention : TURBOCHARGER BEARING HOUSING WITH CAST IN PIPES

(51) International classification :F02B39/00,F02B39/14,F02B37/00
(31) Priority Document No :61/616025
(32) Priority Date :27/03/2012
(33) Name of priority country :U.S.A.
(86) International Application No :PCT/US2013/032928
Filing Date :19/03/2013
(87) International Publication No :WO 2013/148411
(61) Patent of Addition to Application Number :NA
Filing Date :NA
(62) Divisional to Application Number :NA
Filing Date :NA

(71)**Name of Applicant :**
1)BORGWARNER INC.
Address of Applicant :Patent Department 3850 Hamlin Road Auburn Hills Michigan 48326 U.S.A.
(72)**Name of Inventor :**
1)FISCHER Michael
2)BIHY Martin
3)RYLANCE Sean
4)DANIELS Rob
5)FINLEY James

(57) Abstract :
Conventionally turbocharger bearing housings are cast and then oil passageways are drilled or bored into the casting. As a result bores are limited to straight lines extending from drill access points. Greater design flexibility is provided by pre staging in a mold a collection of metal pipes which will define one or more of oil air and water galleries and then casting a bearing housing around the pipes. This provides almost unlimited freedom in shaping and locating the oil bores and other features.

No. of Pages : 15 No. of Claims : 20

(12) PATENT APPLICATION PUBLICATION
(19) INDIA
(22) Date of filing of Application :07/10/2014
(21) Application No.8344/DELNP/2014 A
(43) Publication Date : 08/05/2015

(54) Title of the invention : NAVIGATION SYSTEM AND METHOD FOR DIFFERENT MOBILITY MODES

(51) International classification :G01C21/26
(31) Priority Document No :NA
(32) Priority Date :NA
(33) Name of priority country :NA
(86) International Application No :PCT/CN2012/072465
Filing Date :16/03/2012
(87) International Publication No :WO 2013/134956
(61) Patent of Addition to Application Number :NA
Filing Date :NA
(62) Divisional to Application Number :NA
Filing Date :NA

(71)**Name of Applicant :**
1)QOROS AUTOMOTIVE CO. LTD.
Address of Applicant :Room 501 Binjiang International Building No. 88 Tonggang Road Changshu City Economic Development Area Jiangsu 215513 China
(72)**Name of Inventor :**
1)PANG Eric HC
2)VILLANTI Stefano

(57) Abstract :
A system and method enable calculation of navigation data as a function of mobility mode and to transmit the calculated data to devices accordingly. The system and method calculate first navigation data based on a first mobility mode at a first device; receive a mobility mode change indication to a second mobility mode; calculate second navigation data based on the second mobility mode; and then transmit the second navigation data to a second device. The calculations can be done at the first device (e.g. a navigation system installed in a vehicle) the second device (e.g. a mobile device) and/or at a third device (e.g. server).

No. of Pages : 18 No. of Claims : 21

(12) PATENT APPLICATION PUBLICATION
(19) INDIA
(22) Date of filing of Application :07/10/2014
(21) Application No.8345/DELNP/2014 A
(43) Publication Date : 08/05/2015

(54) Title of the invention : MOBILE SYSTEM AND METHOD FOR MARKING LOCATION

(51) International classification :G01C21/26
(31) Priority Document No :NA
(32) Priority Date :NA
(33) Name of priority country :NA
(86) International Application No :PCT/CN2012/072468
Filing Date :16/03/2012
(87) International Publication No :WO 2013/134958
(61) Patent of Addition to Application Number :NA
Filing Date :NA
(62) Divisional to Application Number :NA
Filing Date :NA

(71)**Name of Applicant :**
1)QOROS AUTOMOTIVE CO. LTD.
Address of Applicant :Room 501 Binjiang International Building No. 88 Tonggang Road Changshu City Economic Development Area Jiangsu 215513 China
(72)**Name of Inventor :**
1)PANG Eric HC
2)VILLANTI Stefano

(57) Abstract :
A system and method enable a user to pin a location in a mobile positioning system and transmit the location to a server for later access. The system and method also can recognize features of the location to determine a name and/or address of the location.

No. of Pages : 16 No. of Claims : 17

(12) PATENT APPLICATION PUBLICATION
(21) Application No.8346/DELNP/2014 A
(19) INDIA
(22) Date of filing of Application :07/10/2014
(43) Publication Date : 08/05/2015

(54) Title of the invention : METHOD FOR ATTACHING A PHOTOVOLTAIC PANEL

(51) International classification :F24J2/52,H01L31/042
(31) Priority Document No :12 53252
(32) Priority Date :10/04/2012
(33) Name of priority country :France
(86) International Application No :PCT/FR2013/050779
Filing Date :10/04/2013
(87) International Publication No :WO 2013/153329
(61) Patent of Addition to Application Number :NA
Filing Date :NA
(62) Divisional to Application Number :NA
Filing Date :NA

(71)**Name of Applicant :**
1)CIEL ET TERRE INTERNATIONAL
Address of Applicant :3 rue du Dr Huart F 59260 Hellemmes Lille France
(72)**Name of Inventor :**
1)VELOSO Manuel
2)GAVEAU Alexis

(57) Abstract :
The invention concerns a device (1) for attaching a framed or unframed photovoltaic panel comprising holding means (2) capable of holding a photovoltaic panel (P) by engaging with two parallel edges of said photovoltaic panel or indeed two parallel wings of the frame of the photovoltaic panel (P). The device comprises said holding means (2) comprising elements (3 4; 5 6) engaging with the two parallel edges of said photovoltaic panel (P) or indeed with the two parallel wings of the frame of the photovoltaic panel (P) each element having a slot (7) intended to receive a wing of the frame (C) of a framed photovoltaic panel (P) or indeed to receive the edge of an unframed photovoltaic panel (P) in such a way as to ensure the photovoltaic panel is blocked at least in the direction perpendicular to the photovoltaic panel (P) and in a direction parallel to the plane of the photovoltaic panel (P) and perpendicular to the axis of the slots (7).

No. of Pages : 26 No. of Claims : 15

(12) PATENT APPLICATION PUBLICATION
(19) INDIA
(22) Date of filing of Application :07/10/2014
(21) Application No.8347/DELNP/2014 A
(43) Publication Date : 08/05/2015

(54) Title of the invention : DEVICE AND METHOD FOR CONTROLLING TRANSMISSION TORQUE TO PROVIDE HILL ASCENT AND/OR DESCENT ASSISTANCE USING ROAD GRADE

(51) International classification :B60K28/00
(31) Priority Document No :61/611948
(32) Priority Date :16/03/2012
(33) Name of priority country :U.S.A.
(86) International Application No :PCT/US2013/031929
Filing Date :15/03/2013
(87) International Publication No :WO 2013/138693
(61) Patent of Addition to Application Number :NA
Filing Date :NA
(62) Divisional to Application Number :NA
Filing Date :NA

(71)**Name of Applicant :**
1)ALLISON TRANSMISSION INC.
Address of Applicant :One Allison Way Indianapolis IN 46222 U.S.A.
(72)**Name of Inventor :**
1)SHATTUCK Jared S.
2)SHULTZ Jeffrey E.
3)YORK Peter G.

(57) Abstract :
A device system and method for controlling transmission torque to provide hill ascent and/or descent assistance to a vehicle includes applying a clutch hold pressure to one or more clutches of a transmission to lock an output shaft of the transmission to resist roll back of the vehicle. The clutch hold pressure is determined as a function of the tractive effort of the vehicle and is applied based on one or more of a transmission output speed signal an engine throttle signal and a vehicle brake signal.

No. of Pages : 43 No. of Claims : 50

(12) PATENT APPLICATION PUBLICATION
(19) INDIA
(22) Date of filing of Application :07/10/2014
(21) Application No.8348/DELNP/2014 A
(43) Publication Date : 08/05/2015

(54) Title of the invention : RECORDING MEDIA

(51) International classification :B41M5/36
(31) Priority Document No :NA
(32) Priority Date :NA
(33) Name of priority country :NA
(86) International Application No :PCT/US2012/033594
Filing Date :13/04/2012
(87) International Publication No :WO 2013/154583
(61) Patent of Addition to Application Number :NA
Filing Date :NA
(62) Divisional to Application Number :NA
Filing Date :NA

(71)**Name of Applicant :**
1)HEWLETT PACKARD DEVELOPMENT COMPANY L.P.
Address of Applicant :11445 Compaq Center Drive West Houston Texas 77070 U.S.A.
(72)**Name of Inventor :**
1)STEICHEN Christine E.
2)FU Xulong
3)PAL Lokendra
4)ALONSO Julio Cesar

(57) Abstract :
The present disclosure provides recording media and related methods. A recording media for printing can comprise a base paper and a backside extruded polyethylene layer on a side of the base paper. The backside extruded polyethylene layer can include a filler and an organic reagent admixed in the extruded polyethylene layer wherein the filler and organic reagent are present in the backside extruded polyethylene layer in an amount of 20% by weight to 50% by weight based on the total weight of the backside extruded polyethylene layer.

No. of Pages : 20 No. of Claims : 15

(12) PATENT APPLICATION PUBLICATION
(19) INDIA
(22) Date of filing of Application :10/01/2012
(21) Application No.276/DELNP/2012 A
(43) Publication Date : 08/05/2015

(54) Title of the invention : LASER MATCH HONING SYSTEM AND METHOD

(51) International classification :B24B 5/14
(31) Priority Document No :200910173534.3
(32) Priority Date :15/09/2009
(33) Name of priority country :China
(86) International Application No :PCT/CN2010/076940
Filing Date :15/09/2010
(87) International Publication No :WO 2011/032495
(61) Patent of Addition to Application Number :NA
Filing Date :NA
(62) Divisional to Application Number :NA
Filing Date :NA

(71)**Name of Applicant :**
1)ROBERT BOSCH GMBH
Address of Applicant :POSTFACH 30 02 20, 70442 STUTTGART, GERMANY
(72)**Name of Inventor :**
1)STEMMANN, JANNIS
2)MEYER, FRANK
3)ROJAS, FERNANDA
4)STUMPP, HARALD

(57) Abstract :
A laser match honing system and method are provided for processing one of a pair of mechanically matching components (1, 2) having matching portions (12, 22, 16, 26) that would be fitted with each other. A dimension of the matching portion (12, 16) of the first component (1) is measured and is then used for calculating the desired dimension of the corresponding matching portion (22, 26) of the second component (2). An actual dimension of the matching portion (22, 26) of the second component (2) is also measured. Then, the matching portion (22, 26) of the second component (2) is honed by laser beam in the condition that the actual dimension is not equal to the desired dimension.

No. of Pages : 20 No. of Claims : 18

(12) PATENT APPLICATION PUBLICATION
(21) Application No.320/DELNP/2012 A
(19) INDIA
(22) Date of filing of Application :11/01/2012
(43) Publication Date : 08/05/2015

(54) Title of the invention : CONTROL ELEMENT, FORWARDING ELEMENT AND ROUTING METHOD FOR INTERNET PROTOCOL NETWORK

(51) International classification :H04L 12/56
(31) Priority Document No :200910092103.4
(32) Priority Date :28/08/2009
(33) Name of priority country :China
(86) International Application No :PCT/CN2010/072642
Filing Date :11/05/2010
(87) International Publication No :WO 2011/022992
(61) Patent of Addition to Application Number :NA
Filing Date :NA
(62) Divisional to Application Number :NA
Filing Date :NA

(71)**Name of Applicant :**
1)ZTE CORPORATION
Address of Applicant :ZTE PLAZA, KEJI ROAD SOUTH, HI-TECH INDUSTRIAL PARK, NANSHAN DISTRICT, SHENZHEN CITY, GUANGDONG PROVINCE 518057, P.R. CHINA
(72)**Name of Inventor :**
1)SONG, XIAOLI

(57) Abstract :
A control element, a forwarding element and a routing method for Internet protocol network are provided in the present invention. The method includes: a forwarding element performs, according to a packet identification rule distributed by a control element, a deep packet inspection on data packets to obtain an identification result, and reports the identification result to the control element; the control element enacts a routing strategy according to the identification result; the control element distributes the routing strategy to the forwarding element; the forwarding element forwards the data packets according to the routing strategy. A control element and a forwarding element are also provided in the present invention. By applying the technical scheme of the present invention, routing methods can be provided as many as possible to meet different requirements.

No. of Pages : 24 No. of Claims : 10

(12) PATENT APPLICATION PUBLICATION
(19) INDIA
(22) Date of filing of Application :12/01/2012
(21) Application No.343/DELNP/2012 A
(43) Publication Date : 08/05/2015

(54) Title of the invention : FLUSH SYRINGE ASSEMBLY WITH CONTROLLED PULSATILE FLUSHING

(51) International classification :A61M 5/315
(31) Priority Document No :61/224,688
(32) Priority Date :10/07/2009
(33) Name of priority country :U.S.A.
(86) International Application No :PCT/US2010/041579
Filing Date :09/07/2010
(87) International Publication No :WO 2010/006103
(61) Patent of Addition to Application Number :NA
Filing Date :NA
(62) Divisional to Application Number :NA
Filing Date :NA

(71)**Name of Applicant :**
1)BECTON, DICKINSON AND COMPANY
Address of Applicant :1 BECTON DRIVE, MC 110 FRANKLIN LAKES, NEW JERSEY 07417-1880 UNITED STATES OF AMERICA
(72)**Name of Inventor :**
1)KOSINSKI, ANTHONY, J.
2)YEMANE TEKESTE, GIRUM
3)CHARLES, NICHOLA

(57) Abstract :
Flush syringe assemblies (100) capable of creating pulsatile movement of the plunger rod (130) as it moves in the distal direction within a syringe barrel (110), while preventing overpressurization of the cathether are provided. An exemplary flush syringe assembly includes a syringe barrel with a first pulsing element (126) and a chamber (115) with flush solution, a plunger rod with a stopper (160) and a second pulsing element (136) that interacts with the first pulsing element to provide an engagement force that causes pulsatile movement of the plunger rod and a thumb press (170) slidably attached to the plunger rod with a pulse control element (190). The pulse control element is compressible to create a compression force that is greater than the engagement force of the first pulsing element and the second pulsing element.

No. of Pages : 52 No. of Claims : 26

(12) PATENT APPLICATION PUBLICATION
(21) Application No.8354/DELNP/2014 A
(19) INDIA
(22) Date of filing of Application :08/10/2014
(43) Publication Date : 08/05/2015

(54) Title of the invention : METHOD FOR PRODUCING TRIAZOLYL METHYL CYCLOALKANOL DERIVATIVE AND TRIAZOLYL METHYL CYCLOALKANOL DERIVATIVE CONTAINING COMPOSITION

(51) International classification :C07D249/08
(31) Priority Document No :2012095015
(32) Priority Date :18/04/2012
(33) Name of priority country :Japan
(86) International Application No :PCT/JP2013/055994
Filing Date :05/03/2013
(87) International Publication No :WO 2013/157311
(61) Patent of Addition to Application Number :NA
Filing Date :NA
(62) Divisional to Application Number :NA
Filing Date :NA

(71)**Name of Applicant :**
1)KUREHA CORPORATION
Address of Applicant :3 3 2 Nihonbashi Hamacho Chuo ku Tokyo 1038552 Japan
(72)**Name of Inventor :**
1)OOHASHI Takashi
2)ARAKI Nobuyuki
3)SHIMOKAWARA Takashi

(57) Abstract :
By producing a triazolyl methyl cycloalkanol derivative by reacting a cycloalkanone derivative and an alkali metal salt of 1 2 4 triazole under the presence of a sulphur ylide at a reaction temperature of higher than 110°C and 140°C or less generation of by products is reduced.

No. of Pages : 20 No. of Claims : 13

(12) PATENT APPLICATION PUBLICATION
(19) INDIA
(22) Date of filing of Application :08/10/2014
(21) Application No.8356/DELNP/2014 A
(43) Publication Date : 08/05/2015

(54) Title of the invention : CNS SHIELDED WIRES

(51) International classification :H01B11/06
(31) Priority Document No :13/447081
(32) Priority Date :13/04/2012
(33) Name of priority country :U.S.A.
(86) International Application No :PCT/US2013/035007
Filing Date :02/04/2013
(87) International Publication No :WO 2013/154871
(61) Patent of Addition to Application Number :NA
Filing Date :NA
(62) Divisional to Application Number :NA
Filing Date :NA

(71)**Name of Applicant :**
1)APPLIED NANOSTRUCTURED SOLUTIONS LLC
Address of Applicant :2323 Eastern Boulevard Baltimore MD 21220 U.S.A.
(72)**Name of Inventor :**
1)SHAH Tushar K.
2)MORBER John J.

(57) Abstract :
A shielded wire includes a carbon nanostructure (CNS) shielding layer including a CNS material in a matrix material the CNS shielding layer being monolithic and disposed about a dielectric layer and a conducting wire wherein the dielectric layer is disposed between the CNS shielding layer and the conducting wire. An extruded thermoplastic jacket includes a CNS material the extruded thermoplastic jacket being configured to protect at least one wire. A thermoplastic article includes a CNS infused fiber material and a flexible thermoplastic.

No. of Pages : 86 No. of Claims : 20

(12) PATENT APPLICATION PUBLICATION
(19) INDIA
(22) Date of filing of Application :10/01/2012
(21) Application No.287/DELNP/2012 A
(43) Publication Date : 08/05/2015

(54) Title of the invention : PROCESS OR SYSTEM FOR DESORBING AN ADSORBENT BED

(51) International classification :B01D 53/02
(31) Priority Document No :12/509,182
(32) Priority Date :24/07/2009
(33) Name of priority country :U.S.A.
(86) International Application No :PCT/US2010/034487
Filing Date :12/05/2010
(87) International Publication No :WO 2011/011106
(61) Patent of Addition to Application Number :NA
Filing Date :NA
(62) Divisional to Application Number :NA
Filing Date :NA

(71)**Name of Applicant :**
1)UOP LLC
Address of Applicant :25 EAST ALGONQUIN ROAD, P.O. BOX 5017, DES PLAINES, ILLINOIS 60017-5017, UNITED STATES OF AMERICA;
(72)**Name of Inventor :**
1)TOWLER, GAVIN P.
2)LUEBKE, CHARLES P.
3)MYERS, DAVID N.
4)KRUPA, STEVEN L.

(57) Abstract :
One exemplary embodiment can be a process for desorbing an adsorbent bed. The process can include passing a desorbent stream through the adsorbent bed to remove at least one of a nitrile compound and an oxygenate compound. Generally, the desorbent stream after desorbing is combined with a feed stream for an alkylation zone after a selective hydrogenation zone.

No. of Pages : 15 No. of Claims : 10

(12) PATENT APPLICATION PUBLICATION
(19) INDIA
(22) Date of filing of Application :30/10/2013
(21) Application No.3217/DEL/2013 A
(43) Publication Date : 08/05/2015

(54) Title of the invention : FORMULATION FOR REPELLING SNAKES AND METHOD THEREOF

(51) International classification :A61K
(31) Priority Document No :NA
(32) Priority Date :NA
(33) Name of priority country :NA
(86) International Application No :NA
Filing Date :NA
(87) International Publication No : NA
(61) Patent of Addition to Application Number :NA
Filing Date :NA
(62) Divisional to Application Number :NA
Filing Date :NA

(71)**Name of Applicant :**
1)DIRECTOR GENERAL, DEFENCE RESEARCH AND DEVELOPMENT ORGANIZATION
Address of Applicant :Ministry of Defence, Govt. of India, Room No 348, B-Wing, DRDO Bhawan, Rajaji Marg, New Delhi 110001, Delhi India
(72)**Name of Inventor :**
1)CHATTOPADHYAY, Pronobesh
2)BANERJEE, Shubam
3)AGNIHOTRI, Amit
4)KARMAKAR, Sanjeev
5)GOYARY, Danswrang
6)POLICEGOUDRA, Rudragoud
7)VAIRALE, Mohan G.
8)CHAURASIA, Asshwini
9)VEER, Vijay

(57) Abstract :
The present disclosure relates to a formulation comprising of Cedrus deodara, Eugenia caryophyllata, Capsicum chinense, Cinnamomum verum, Allium Sativum, Syzygium aromaticum, and Mentha piperita. The present disclosure further relates to a process for the preparation of the formulation and the use of the formulation for repelling snakes.

No. of Pages : 23 No. of Claims : 11

(12) PATENT APPLICATION PUBLICATION
(21) Application No.3218/DEL/2013 A
(19) INDIA
(22) Date of filing of Application :31/10/2013
(43) Publication Date : 08/05/2015

(54) Title of the invention : FOUR-TERMINAL GATE-CONTROLLED THIN-FILM ORGANIC THYRISTOR

(51) International classification :H01L
(31) Priority Document No :NA
(32) Priority Date :NA
(33) Name of priority country :NA
(86) International Application No :NA
Filing Date :NA
(87) International Publication No : NA
(61) Patent of Addition to Application Number :NA
Filing Date :NA
(62) Divisional to Application Number :NA
Filing Date :NA

(71)**Name of Applicant :**
1)INDIAN INSTITUTE OF TECHNOLOGY KANPUR
Address of Applicant :Kanpur, Uttar Pradesh, 208016, India
Uttar Pradesh India
(72)**Name of Inventor :**
1)BAQUER MAZHARI
2)ARJIT ASHOK

(57) Abstract :
Technologies are generally described for a four-terminal, gate-controlled, thin-film thyristor device. The thyristor device may essentially be an n-type thin-film transistor (TFT) with an additional emitter terminal. The thyristor device may exhibit an S-shaped negative differential resistance (NDR) characteristic resulting from conductance modulation. The conductance modulation may be caused by formation of a secondary channel for current flow due to an inherent structure of the device. The secondary channel may be formed in a semiconductor area within the device, the semiconductor area including a hole transporting organic semiconductor layer (HTL) and an electron transporting organic semiconductor layer (ETL). A gate terminal of the thyristor device may further allow onset of NDR characteristics to be controlled and may allow the device to be switched off.

No. of Pages : 31 No. of Claims : 10

(12) PATENT APPLICATION PUBLICATION
(19) INDIA
(22) Date of filing of Application :08/10/2014
(21) Application No.8367/DELNP/2014 A
(43) Publication Date : 08/05/2015

(54) Title of the invention : PRINTING PRESS WITH MOBILE INKING CARRIAGE

(51) International classification :B41F31/32,B41F9/06,B41F33/00
(31) Priority Document No :12163548.6
(32) Priority Date :10/04/2012
(33) Name of priority country :EPO
(86) International Application No :PCT/IB2013/052846
Filing Date :10/04/2013
(87) International Publication No :WO 2013/153519
(61) Patent of Addition to Application Number :NA
Filing Date :NA
(62) Divisional to Application Number :NA
Filing Date :NA

(71)**Name of Applicant :**
1)KBA NOTASYS SA
Address of Applicant :PO Box 347 55 Avenue du Grey CH 1000 Lausanne 22 Switzerland
(72)**Name of Inventor :**
1)SCHARKUS Volker
2)SCHWITZKY Volkmar Rolf

(57) Abstract :
There is described a printing press (1; 1; 1) comprising an ink receiving cylinder (9; 8) receiving ink from an inking system (90 93 90 93; 95 99 95 99; 100 104 100 104) having a plurality of ink applying cylinders or rollers (93 93; 99 99; 104 104) arranged one above the other around part of a circumference of the ink receiving cylinder (9; 8) the ink applying cylinders or rollers (93 93; 99 99; 104 104) being inked by a corresponding plurality of inking devices (90 90; 95 95; 100 100) the printing press (1; 1; 1) further comprising an inking carriage (52; 55; 57) supporting the plurality of inking devices (90 90; 95 95; 100 100) which inking carriage (52; 55; 57) can be moved with respect to the ink receiving cylinder (9; 8) between a working position and a retracted position. The at least one selected inking device (90; 95; 100) amongst the plurality of inking devices (90 90; 95 95; 100 100) of the inking system (90 93 90 93; 95 99 95 99; 100 104 100 104) is supported onto the inking carriage (52; 55; 57) via a movable frame (60; 65; 70) which movable frame (60; 65; 70) is supported by the inking carriage (52; 55; 57) to allow movement of the selected inking device (90; 95; 100) with respect to the inking carriage (52; 55; 57) and with respect to a remaining part (90; 95; 100) of the plurality of inking devices (90 90; 95 95; 100 100).

No. of Pages : 32 No. of Claims : 15

(12) PATENT APPLICATION PUBLICATION
(19) INDIA
(22) Date of filing of Application :11/01/2012
(21) Application No.318/DELNP/2012 A
(43) Publication Date : 08/05/2015

(54) Title of the invention : PUSH-FIT PIPE FITTING SYSTEM WITH SUPPORT SLEEVE

(51) International classification :F16L 21/03
(31) Priority Document No :0910379.7
(32) Priority Date :15/06/2009
(33) Name of priority country :U.K.
(86) International Application No :PCT/GB2010/001153
Filing Date :14/06/2010
(87) International Publication No :WO 2010/146337
(61) Patent of Addition to Application Number :NA
Filing Date :NA
(62) Divisional to Application Number :NA
Filing Date :NA

(71)**Name of Applicant :**
1)WAVIN B.V.
Address of Applicant :STATIONSPLEIN 3, NL-8011 CW ZWOLLE (NL) Netherlands
(72)**Name of Inventor :**
1)BRISTOW, ADRIAN DAVID
2)BROOKMAN GEERT
3)SUTCLIFFE, STEVEN
4)FISHER, RAYMOND
5)FARDON, MARK

(57) Abstract :
A push-fit pipe fitting system comprises a fitting having a body portion defining a bore for receiving a pipe, the said bore being provided with gripping means for retaining the pipe within the bore, a seal for effecting a seal between the pipe and the fitting, and a support sleeve. The support sleeve has a nose portion for capping an end portion of the pipe and a spigot portion for location within the pipe. The spigot portion is provided with at least one tongue extending both radially outwardly and axially towards the nose portion. The tongue has a distal end portion with an arcuate profile.

No. of Pages : 14 No. of Claims : 18

(12) PATENT APPLICATION PUBLICATION
(19) INDIA
(22) Date of filing of Application :12/01/2012
(21) Application No.347/DELNP/2012 A
(43) Publication Date : 08/05/2015

(54) Title of the invention : BAG FILTER COMPRISING FILTER FELT OF META-ARAMID AND PARA-ARAMID STAPLE FIBER

(51) International classification :B01D 39/08
(31) Priority Document No :12/505,797
(32) Priority Date :20/07/2009
(33) Name of priority country :U.S.A.
(86) International Application No :PCT/US2010/042577
Filing Date :20/07/2010
(87) International Publication No :WO 2010/011395
(61) Patent of Addition to Application Number :NA
Filing Date :NA
(62) Divisional to Application Number :NA
Filing Date :NA

(71)**Name of Applicant :**
1)E. I. DU PONT DE NEMOURS AND COMPANY
Address of Applicant :1007 MARKET STREET, WILMINGTON, DELAWARE 19898, U.S.A..
(72)**Name of Inventor :**
1)KOHLI, ANIL
2)WYSS, KURT, HANS

(57) Abstract :
This invention relates to a bag filter having a tubular section,a closed end, and an open end; the tubular section comprising a filter felt consisting essentially of a batt of an intimate blend of fibers needle-punched to a woven scrim, the blend of fibers consisting of 50 to 70 percent by weight meta-aramid staple fiber, and 30 to 50 percent by weight para-aramid staple fiber; said filter felt having a total basis weight of from 10 to 19 ounces per square yard (340 to 580 grams per square meter).

No. of Pages : 18 No. of Claims : 8

(12) PATENT APPLICATION PUBLICATION
(19) INDIA
(22) Date of filing of Application :08/10/2014
(21) Application No.8362/DELNP/2014 A
(43) Publication Date : 08/05/2015

(54) Title of the invention : APPARATUSES AND METHODS FOR AT BIT RESISTIVITY MEASUREMENTS FOR AN EARTH BORING DRILLING TOOL

(51) International classification :E21B47/013,E21B47/01,E21B10/567
(31) Priority Document No :61/623042
(32) Priority Date :11/04/2012
(33) Name of priority country :U.S.A.
(86) International Application No :PCT/US2013/036151
Filing Date :11/04/2013
(87) International Publication No :WO 2013/155287
(61) Patent of Addition to Application Number :NA
Filing Date :NA
(62) Divisional to Application Number :NA
Filing Date :NA

(71)**Name of Applicant :**
1)Baker Hughes Incorporated
Address of Applicant :P.O. Box 4740 Houston TX 77210 4740 U.S.A.
(72)**Name of Inventor :**
1)DIGIOVANNI Anthony A.
2)SCOTT Danny E.
3)GEORGI Daniel T.
4)CURRY David A.
5)KHOKHAR Rashid W.
6)DIFOGGIO Rocco

(57) Abstract :
A cutting element for an earth boring drilling tool comprises a cutting body having a cutting surface thereon and a sensor coupled with the cutting surface the sensor configured to determine resistivity of a contacting formation. An earth boring drilling tool comprises a bit body and an instrumented cutting element coupled with the bit body. The cutting element includes a cutting body having a cutting surface thereon and at least one sensor located proximate the cutting surface. The at least one sensor is oriented and configured to determine resistivity of a contacting formation. A method of determining resistivity of a subterranean formation during a drilling operation comprises energizing a sensor of an instrumented cutting element of a drill bit sensing a return signal flowing on or through the subterranean formation through the instrumented cutting element and determining a resistivity of the subterranean formation based at least in part on the return signal.

No. of Pages : 35 No. of Claims : 20

(12) PATENT APPLICATION PUBLICATION
(19) INDIA
(22) Date of filing of Application :08/10/2014
(21) Application No.8365/DELNP/2014 A
(43) Publication Date : 08/05/2015

(54) Title of the invention : ELECTRICALLY CONDUCTIVE POLYAMIDE SUBSTRATE

(51) International classification :C08L77/00,H01B1/02,B32B15/088
(31) Priority Document No :12165949.4
(32) Priority Date :27/04/2012
(33) Name of priority country :EPO
(86) International Application No :PCT/EP2013/058749
Filing Date :26/04/2013
(87) International Publication No :WO 2013/160454
(61) Patent of Addition to Application Number :NA
Filing Date :NA
(62) Divisional to Application Number :NA
Filing Date :NA

(71)**Name of Applicant :**
1)DSM IP ASSETS B.V.
Address of Applicant :Het Overloon 1 NL 6411 TE Heerlen Netherlands
(72)**Name of Inventor :**
1)BURGT VAN DER Frank Peter Theodorus Johannes
2)SCHR–DER Christiaan

(57) Abstract :
The invention relates to an electrically conductive system comprising a substrate and at least one conductive track adhered onto the substrate wherein the substrate is composed of at least a polyamide and the conductive track is made out of an electrically conductive material and wherein the conductive track is adhered to the substrate by an jet printing technique followed by sintering. The invention further relates to a process for the production of an electrically conductive system and to its uses.

No. of Pages : 19 No. of Claims : 15

(12) PATENT APPLICATION PUBLICATION
(19) INDIA
(22) Date of filing of Application :08/10/2014
(21) Application No.8366/DELNP/2014 A
(43) Publication Date : 08/05/2015

(54) Title of the invention : TURBINE ROTOR BLADE AND AXIAL ROTOR BLADE SECTION FOR A GAS TURBINE

(51) International classification :F01D5/30,F01D5/08
(31) Priority Document No :10 2012 207 622.0
(32) Priority Date :08/05/2012
(33) Name of priority country :Germany
(86) International Application No :PCT/EP2013/057753
Filing Date :15/04/2013
(87) International Publication No :WO 2013/167346
(61) Patent of Addition to Application Number :NA
Filing Date :NA
(62) Divisional to Application Number :NA
Filing Date :NA

(71)**Name of Applicant :**
1)SIEMENS AKTIENGESELLSCHAFT
Address of Applicant :Wittelsbacherplatz 2 80333 M¼nchen Germany
(72)**Name of Inventor :**
1)AHMAD Fathi
2)KURT Nihal

(57) Abstract :
The invention relates to a turbine rotor blade (14) with a blade root (54) a platform (28) which adjoins it and a turbine blade (15) which is set up on that side of the platform (28) which faces away from the blade root (54) wherein at least one opening (62) for feeding a coolant (66) into the turbine rotor blade interior is provided on an underside (64) of the blade root (54) which at least one opening (62) merges into a coolant duct (60). Furthermore the invention relates to an axial rotor section (10) for a rotor (23) of a turbine having an outer circumferential surface which adjoins two end side first side surfaces (53) and in which rotor blade holding grooves (12) which are distributed over the circumference and extend along an axial direction are provided for rotor blades (14) of the turbine wherein a turbine rotor blade (14) is arranged in every holding groove (12) wherein a multiplicity of sealing elements (16) are provided at the side of a side surface (53) of the rotor section (10) which sealing elements (16) lie opposite the end sides (52) of blade roots (54) such that a gap is formed. In order to achieve improved cooling of the sealing element (16) which extends the service life thereof and/or toughens said sealing element (16) for higher ambient temperatures it is proposed that a multiplicity of outlet holes (58) for impingement cooling of the sealing elements (16) are provided in the end surface (53) and/or in the end surface (52).

No. of Pages : 21 No. of Claims : 8

(12) PATENT APPLICATION PUBLICATION
(21) Application No.316/DELNP/2012 A
(19) INDIA
(22) Date of filing of Application :11/01/2012
(43) Publication Date : 08/05/2015

(54) Title of the invention : EXTERNAL ANCHORING CONFIGURATIONS FOR MODULAR GASTROINTESTINAL PROSTHESES

(51) International classification :A61F 2/04
(31) Priority Document No :61/270.588
(32) Priority Date :10/07/2009
(33) Name of priority country :U.S.A.
(86) International Application No :PCT/US2010/041574
Filing Date :09/07/2010
(87) International Publication No :WO 2011/006098
(61) Patent of Addition to Application Number :NA
Filing Date :NA
(62) Divisional to Application Number :NA
Filing Date :NA

(71)**Name of Applicant :**
1)METAMODIX, INC.
Address of Applicant :3650 ANNAPOLIS LANE NORTH, PLYMOUTH, MINNESOTA 55447, U.S.A.
(72)**Name of Inventor :**
1)BELHE, KEDAR R.
2)THOMPSON, PAUL J.

(57) Abstract :
Components may be used separately or in combination to create anchoring systems for intra-luminal implants for the treatment of metabolic disorders such as obesity and diabetes. Various systems include an external component adapted for deployment around a portion of the gastrointestinal tract (e.g., the duodenum) and an internal component adapted for implantation within the gastrointestinal tract. Various systems use anchoring means that are based on mechanical interference, elasticity, spring force, shape memory transformation, magnetic attraction, repulsion and/or levitation. Various embodiments rely on longitudinal anchoring of the implants with minimal force against tissue.

No. of Pages : 84 No. of Claims : 20

(12) PATENT APPLICATION PUBLICATION
(21) Application No.3237/DEL/2013 A
(19) INDIA
(22) Date of filing of Application :01/11/2013
(43) Publication Date : 08/05/2015

(54) Title of the invention : CO-RU-ZSM-5 ZEOLITE BASED N2O DECOMPOSITION CATALYST AND PROCESS FOR THE PREAPARATION THEREOF

(51) International classification	:B01J	(71)**Name of Applicant :**
(31) Priority Document No	:NA	**1)COUNCIL OF SCIENTIFIC & INDUSTRIAL RESEARCH**
(32) Priority Date	:NA	Address of Applicant :ANUSANDHAN BHAWAN, RAFI MARG, NEW DELHI - 110001, INDIA. Delhi India
(33) Name of priority country	:NA	
(86) International Application No	:NA	
Filing Date	:NA	(72)**Name of Inventor :**
(87) International Publication No	: NA	**1)LABHASETWAR NITIN KUMAR**
(61) Patent of Addition to Application Number	:NA	**2)RAYALU SADHANA SURESH**
Filing Date	:NA	**3)WATE SATISH RAMCHANDRA**
(62) Divisional to Application Number	:NA	
Filing Date	:NA	

(57) Abstract :
ZSM-5 zeolite based catalyst for N20 decomposition has been disclosed with improved catalytic properties by incorporation of the small but optimum amount of cobalt as well as co-cation ruthenium. The standardized composition of this material shows high catalytic activity for the catalytic decomposition of nitrous oxide (N20), a pollutant of environmental importance due to its high Green House Gas (GHG) Potential. This novel catalyst is thermally stable and can be used for the direct decomposition of N20 emissions under various conditions (N20=5000 ppm; 02= 5 vol % NO= 200 ppm; water vapour 4 vol % balance He). Due to the low cost and good catalytic activity at relatively lower temperature, it is suitable for various applications related to the control of N20 emissions.

No. of Pages : 25 No. of Claims : 10

(12) PATENT APPLICATION PUBLICATION
(21) Application No.8371/DELNP/2014 A
(19) INDIA
(22) Date of filing of Application :08/10/2014
(43) Publication Date : 08/05/2015

(54) Title of the invention : METHOD AND DEVICE FOR MEASURING THE FLATNESS OF A METAL PRODUCT

(51) International classification :G01B11/30,G01N21/89
(31) Priority Document No :12290121.8
(32) Priority Date :04/04/2012
(33) Name of priority country :EPO
(86) International Application No :PCT/EP2013/057035
Filing Date :03/04/2013
(87) International Publication No :WO 2013/150075
(61) Patent of Addition to Application Number :NA
Filing Date :NA
(62) Divisional to Application Number :NA
Filing Date :NA

(71)**Name of Applicant :**
1)SIEMENS VAI METALS TECHNOLOGIES GMBH
Address of Applicant :Turmstrasse 44 A 4031 Linz Austria
(72)**Name of Inventor :**
1)DOREL Laurent

(57) Abstract :
A method for measuring the flatness of a metal product and an associated device are presented. Said method applies to a metal product in the form either of a strip or of a plate from a metallurgical processing line said product to be measured being by default free of external traction and mainly comprises the following steps: a) illuminating a portion of at least one face of said product under uniform intensity; b) capturing an image of a light line of the illuminated portion c) relatively moving the illuminated portion and the light line in relation to the product in a defined direction; d) repeating steps a) b) and c); e) collecting the images of lines in a two dimensional distribution of intensities and selecting a strand direction of the product in which if at least one wave intensity is detected a local amplitude variation of said wave delivers a local strand flatness defect value.

No. of Pages : 24 No. of Claims : 16

(12) PATENT APPLICATION PUBLICATION
(19) INDIA
(22) Date of filing of Application :08/10/2014
(21) Application No.8373/DELNP/2014 A
(43) Publication Date : 08/05/2015

(54) Title of the invention : METHODS FOR PREPARING 3 SUBSTITUTED 6 TRIFLUOROMETHYL PYRIDINES AND METHODS FOR USING 6 TRICHLOROMETHYL HALOGENATED PYRIDINES

(51) International classification :C07D213/127,C07D213/26
(31) Priority Document No :61/618370
(32) Priority Date :30/03/2012
(33) Name of priority country :U.S.A.
(86) International Application No :PCT/US2013/032270
Filing Date :15/03/2013
(87) International Publication No :WO 2013/148338
(61) Patent of Addition to Application Number :NA
Filing Date :NA
(62) Divisional to Application Number :NA
Filing Date :NA

(71)**Name of Applicant :**
1)DOW AGROSCIENCES LLC
Address of Applicant :9330 Zionsville Rd. Indianapolis Indiana 46268 U.S.A.
(72)**Name of Inventor :**
1)ROSS Ronald
2)RENGA James M.
3)BLAND Douglas C.
4)ROTH Gary
5)FUNG Alexander P.
6)DAVIS Clark S.

(57) Abstract :
3 substituted 6 trifluoromethyl pyridines are useful synthetic intermediates in the preparation of the N substituted (6 haloalkylpyridin 3 yl)alkyl sulfoximines which are useful in forming potent insecticides. Methods of forming such 3 substituted 6 trifluoromethyl pyridines are disclosed. Also disclosed are methods of using 6 trichloromethyl halogenated pyridines to form 3 substituted 6 trifluoromethyl pyridines are disclosed.

No. of Pages : 31 No. of Claims : 23

(12) PATENT APPLICATION PUBLICATION
(19) INDIA
(22) Date of filing of Application :08/10/2014
(21) Application No.8374/DELNP/2014 A
(43) Publication Date : 08/05/2015

(54) Title of the invention : SURGICAL INSTRUMENT WITH TISSUE DENSITY SENSING

(51) International classification :A61B17/32
(31) Priority Document No :13/449837
(32) Priority Date :18/04/2012
(33) Name of priority country :U.S.A.
(86) International Application No :PCT/US2013/036587
Filing Date :15/04/2013
(87) International Publication No :WO 2013/158545
(61) Patent of Addition to Application Number :NA
Filing Date :NA
(62) Divisional to Application Number :NA
Filing Date :NA

(71)**Name of Applicant :**
1)ETHICON ENDO SURGERY INC.
Address of Applicant :4545 Creek Road Cincinnati Ohio 45242 U.S.A.
(72)**Name of Inventor :**
1)DANNAHER William D.
2)PRICE Daniel W.
3)KIMBALL Cory G.
4)KELLY William D.
5)RHEE Sora
6)GEE Jacob S.
7)BERTKE Brian D.
8)WELLING Alissa L.

(57) Abstract :
An apparatus comprises an end effector a body assembly a power source and a control module. The end effector is operable for use in a surgical procedure and can deliver energy to a surgical site. The end effector comprises at least one sensor. The sensor is able to measure at least one physical characteristic associated with the surgical site. The body assembly is in communication with the end effector. The power source is in communication with the body assembly and is operable to deliver power to the end effector. The control module is in communication with the sensor and is operable to change delivery of power to the end effector based on data from the sensor indicating a change in tissue density.

No. of Pages : 44 No. of Claims : 20

(12) PATENT APPLICATION PUBLICATION
(19) INDIA
(22) Date of filing of Application :11/01/2012
(21) Application No.299/DELNP/2012 A
(43) Publication Date : 08/05/2015

(54) Title of the invention : CONTACT LENS

(51) International classification :G02C 7/04
(31) Priority Document No :61/228,220
(32) Priority Date :24/07/2009
(33) Name of priority country :U.S.A.
(86) International Application No :PCT/US2010/042499
Filing Date :20/07/2010
(87) International Publication No :WO 2011/011344
(61) Patent of Addition to Application Number :NA
Filing Date :NA
(62) Divisional to Application Number :NA
Filing Date :NA

(71)**Name of Applicant :**
1)BAUSCH & LOMB INCORPORATED
Address of Applicant :ONE BAUSCH & LOMB PLACE, ROCHESTER, NEW YORK 14604, UNITED STATES OF AMERICA U.S.A.
(72)**Name of Inventor :**
1)FANQING RICHARD MENG
2)SHANE MAO
3)LAWRENCE CHAPOY

(57) Abstract :
A method of making a contact lens involves depositing on a portion of a molding surface of a contact lens mold a colorant composition comprising a pigment, a copolymer of 2-hydroxyethylmethacrylate and N-vinylpyrrolidinone, and a crosslinking monomer.

No. of Pages : 13 No. of Claims : 13

(12) PATENT APPLICATION PUBLICATION
(19) INDIA
(22) Date of filing of Application :11/01/2012
(21) Application No.321/DELNP/2012 A
(43) Publication Date : 08/05/2015

(54) Title of the invention : METHOD FOR IMPLEMENTING MESSAGE-TYPE TRAFFIC ROUTING AND DEVICE THEREOF

(51) International classification :H04W 8/26
(31) Priority Document No :200910161035.2
(32) Priority Date :30/07/2009
(33) Name of priority country :China
(86) International Application No :PCT/CN2010/073436
Filing Date :01/06/2010
(87) International Publication No :WO 2011/012018
(61) Patent of Addition to Application Number :NA
Filing Date :NA
(62) Divisional to Application Number :NA
Filing Date :NA

(71)**Name of Applicant :**
1)ZTE CORPORATION
Address of Applicant :ZTE PLAZA, KEJI ROAD SOUTH, HI-TECH INDUSTRIAL PARK, NANSHAN DISTRICT, SHENZHEN CITY, GUANGDONG PROVINCE 518057, P.R. CHINA
(72)**Name of Inventor :**
1)DAI, SHUQIU
2)JIANG, XIAOBIN
3)HOU, BIN
4)YANG, YU

(57) Abstract :
The invention provides a method for implementing message-type traffic routing and a device thereof, the device comprising: a configuration managing module, a message receiving module, a calling and called routing module, a called routing module and a message sending module. When a user sends an uplink message, the uplink message is sent to a branch office serving the user within the service provider or the head office of the service provider serving the user by matching the calling number and the called number of the uplink message sent by the user with routes pre-configured in the calling and called routing module or the called routing module. The method for implementing message-type traffic routing and the device thereof provided in the invention enable an enterprise to use a universal access number to realize separate message interaction between each branch office inside the enterprise and its users, and each branch office does not need to apply for a new access number separately.

No. of Pages : 21 No. of Claims : 8

(12) PATENT APPLICATION PUBLICATION
(21) Application No.3211/DEL/2013 A
(19) INDIA
(22) Date of filing of Application :30/10/2013
(43) Publication Date : 08/05/2015

(54) Title of the invention : SYSTEM AND METHOD FOR CHANGING MOVEMENT PATTERN OF JOYSTICK ASSEMBLY

(51) International classification :G06F
(31) Priority Document No :NA
(32) Priority Date :NA
(33) Name of priority country :NA
(86) International Application No :NA
Filing Date :NA
(87) International Publication No : NA
(61) Patent of Addition to Application Number :NA
Filing Date :NA
(62) Divisional to Application Number :NA
Filing Date :NA

(71)**Name of Applicant :**
1)CATERPILLAR INC.
Address of Applicant :100 N.E. ADAMS STREET, PEORIA, ILLINOIS 61629, USA
(72)**Name of Inventor :**
1)GUDLA, HARISH KUMAR

(57) Abstract :
A joystick assembly is disclosed. The joystick assembly includes a first yoke and a second yoke. The first yoke is fixedly attached to one end of a joystick. The joystick assembly also includes a base plate fixedly attached to the second yoke. The joystick assembly further includes a stop plate. The stop plate is configured to be selectively secured to the base plate either in a first position or a second position. Further, the stop plate contacts the second yoke such that an orientation of the second yoke with respect to the base plate is based on a position of the stop plate. A pattern of movement of the joystick is configured to be changed based on the position of the stop plate.

No. of Pages : 23 No. of Claims : 13

(12) PATENT APPLICATION PUBLICATION
(19) INDIA
(22) Date of filing of Application :12/01/2012
(21) Application No.344/DELNP/2012 A
(43) Publication Date : 08/05/2015

(54) Title of the invention : FLUSH SYRINGE ASSEMBLY

(51) International classification :A61M 5/315
(31) Priority Document No :61/224,688
(32) Priority Date :10/07/2009
(33) Name of priority country :U.S.A.
(86) International Application No :PCT/US2010/041559
Filing Date :09/07/2010
(87) International Publication No :WO 2010/006086
(61) Patent of Addition to Application Number :NA
Filing Date :NA
(62) Divisional to Application Number :NA
Filing Date :NA

(71)**Name of Applicant :**
1)BECTON DICKINSON AND COMPANY
Address of Applicant :1 BECTON DRIVE, MC 110 FRANKLIN LAKES, NEW JERSEY 07417-1880 UNITED STATES OF AMERICA
(72)**Name of Inventor :**
1)KOSINSKI, ANTHONY, J.
2)ZERDA, ADAM
3)YEMANE TEKESTE, GIRUM

(57) Abstract :
Syringe assemblies for use in flush applications are provided. Syringe assemblies according to one aspect of the present invention include a plunger rod (130) and a syringe (110) barrel that incorporate one or more pulsing elements (145,245,345) on the plunger rod or barrel that are rotatable to create pulsatile movement or continuous and unimpeded movement a plunger rod within a syringe barrel. One or more embodiments pertain to syringe assemblies permit both pulsatile movement of the plunger rod within the barrel and continuous and unimpeded movement of the plunger rod in the distal direction along substantially the entire length of the syringe barrel upon application of force to the plunger rod in only the distal direction. Methods of flushing a catheter are also provided.

No. of Pages : 62 No. of Claims : 20

(12) PATENT APPLICATION PUBLICATION
(19) INDIA
(22) Date of filing of Application :08/10/2014
(21) Application No.8379/DELNP/2014 A
(43) Publication Date : 08/05/2015

(54) Title of the invention : NOVEL SULFONATE BASED TRIMEBUTINE SALTS

(51) International classification :C07C219/22,A61K31/185,A61K31/277
(31) Priority Document No :61/609543
(32) Priority Date :12/03/2012
(33) Name of priority country :U.S.A.
(86) International Application No :PCT/CA2013/050178
Filing Date :11/03/2013
(87) International Publication No :WO 2013/134869
(61) Patent of Addition to Application Number :NA
Filing Date :NA
(62) Divisional to Application Number :NA
Filing Date :NA

(71)**Name of Applicant :**
1)GICARE PHARMA INC.
Address of Applicant :227 Ave. Westminster North Montral Ouest Qubec H4X 1Z5 Canada
(72)**Name of Inventor :**
1)MEUNIER Jean Fran§ois
2)LAU Cheuk Kun
3)GUAY Daniel
4)BYDLINSKI Gregory
5)SPASSOVA Nadejda
6)CANTIN Louis David
7)RANGER Maxime

(57) Abstract :
The present description relates to compounds of Formula I (A X) a diastereoisomer an enantiomer or a mixture thereof pharmaceutical composition comprising same and uses thereof for gastrointestinal endoscopic and medical imaging applications and for the treatment of visceral pain: Where Rand R are as defined herein

No. of Pages : 72 No. of Claims : 37

(12) PATENT APPLICATION PUBLICATION
(19) INDIA
(22) Date of filing of Application :15/04/2014
(21) Application No.3008/DELNP/2014 A
(43) Publication Date : 08/05/2015

(54) Title of the invention : METHOD FOR PRODUCING NUCLEAR FUEL PRODUCTS WITH A HIGH LOADING OF LOW ENRICHED URANIUM AND CORRESPONDING NUCLEAR KERNBRENNSTOFF

(51) International classification :G21C3/60,G21G4/00,G21G4/08
(31) Priority Document No :NA
(32) Priority Date :NA
(33) Name of priority country :NA
(86) International Application No :PCT/IB2011/002957
Filing Date :21/10/2011
(87) International Publication No:WO 2013/057533
(61) Patent of Addition to Application Number :NA
Filing Date :NA
(62) Divisional to Application Number :NA
Filing Date :NA

(71)**Name of Applicant :**
1)COMPAGNIE POUR LETUDE ET LA REALISATION DE COMBUSTIBLES ATOMIQUES
Address of Applicant :Tour Areva 1 Place Jean Millier F 92400 Courbevoie France
(72)**Name of Inventor :**
1)STEPNIK Bertrand
2)GRASSE Michel
3)BOURDAT Gilles
4)COULLOMB Christel
5)MOYROUD Christophe

(57) Abstract :
A METHOD OF PRODUCING A NUCLEAR FUEL PRODUCT (1) THE METHOD COMPRISING THE STEPS OF: PROVIDING A CORE (3) COMPRISING ALUMINIUM AND LOW ENRICHED URANIUM; AND SEALING SAID CORE IN A CLADDING (5); WHEREIN SAID CORE (3) HAS A LOW ENRICHED URANIUM LOADING STRICTLY HIGHER THAN 3.0 G U/CM AND COMPRISES LESS THAN 10 WT% OF ALUMINIUM PHASE AND/OR ALUMINIUM COMPOUNDS OTHER THAN UALPHASE THAN UAL PHASE AND THAN UAL PHASE. CORRESPONDING NUCLEAR FUEL PRODUCT (1).

No. of Pages : 17 No. of Claims : 19

(12) PATENT APPLICATION PUBLICATION
(19) INDIA
(22) Date of filing of Application :11/01/2012
(21) Application No.308/DELNP/2012 A
(43) Publication Date : 08/05/2015

(54) Title of the invention : SOLVENT COMPOSITION AND WIRE COATING MEDIUM

(51) International classification :C09D 129/14
(31) Priority Document No :102009026343.8
(32) Priority Date :06/08/2009
(33) Name of priority country :Germany
(86) International Application No :PCT/EP2010//060428
Filing Date :19/07/2010
(87) International Publication No :WO 2011/015447
(61) Patent of Addition to Application Number :NA
Filing Date :NA
(62) Divisional to Application Number :NA
Filing Date :NA

(71)**Name of Applicant :**
1)ELANTAS GMBH
Address of Applicant :ABELSTR. 43, 46483 WESEL, GERMANY
(72)**Name of Inventor :**
1)SONCINI, GIANCARLO
2)LIENERT, KLAUS-WILHELM

(57) Abstract :
Solvent composition comprising ethanol, aromatic hydrocarbon or hydrocarbon mixture, high-boiling solvent, wire enamel formulation based on polyvinyl formal and comprising the solvent composition, preparation process and use.

No. of Pages : 15 No. of Claims : 8

(12) PATENT APPLICATION PUBLICATION
(19) INDIA
(22) Date of filing of Application :11/01/2012
(21) Application No.323/DELNP/2012 A
(43) Publication Date : 08/05/2015

(54) Title of the invention : APPARATUS AND METHOD FOR GROUND IMPROVEMENT

(51) International classification :B23B
(31) Priority Document No :61/219,814
(32) Priority Date :24/06/2009
(33) Name of priority country :U.S.A.
(86) International Application No :PCT/US2010/037032
Filing Date :02/06/2010
(87) International Publication No : NA
(61) Patent of Addition to Application Number :NA
Filing Date :NA
(62) Divisional to Application Number :NA
Filing Date :NA

(71)**Name of Applicant :**
1)GEOPIER FOUNDATION COMPANY INC.
Address of Applicant :150 Fairview Road Suite 335 Mooresville North Carolina 28117 United States of America.
(72)**Name of Inventor :**
1)Stephen A. MAHER
2)Kord J. WISSMANN

(57) Abstract :
An apparatus and method for ground improvement includes a device having a plurality of tines extending downwardly from a top plate. The device is mechanically driven into the ground to achieve predetermined depths of penetration by the tines. The device is retracted and driven repeatedly to achieve soil densification. Optionally voids made by the device can be filled with a flowable media.

No. of Pages : 43 No. of Claims : 44

(12) PATENT APPLICATION PUBLICATION
(19) INDIA
(22) Date of filing of Application :08/10/2014
(21) Application No.8383/DELNP/2014 A
(43) Publication Date : 08/05/2015

(54) Title of the invention : COMPOSITION OF FIBROUS MATERIAL

(51) International classification :D21H11/14,D21H11/12,D21J1/00
(31) Priority Document No :20 2012 002 588.0
(32) Priority Date :13/03/2012
(33) Name of priority country :Germany
(86) International Application No :PCT/EP2013/054885
Filing Date :11/03/2013
(87) International Publication No :WO 2013/135632
(61) Patent of Addition to Application Number :NA
Filing Date :NA
(62) Divisional to Application Number :NA
Filing Date :NA

(71)**Name of Applicant :**
1)DAGNONE Uwe
Address of Applicant :Bonner Str. 146 53773 Hennef Germany
(72)**Name of Inventor :**
1)DAGNONE Uwe

(57) Abstract :
The present invention relates to a composition of fibrous material with a prescribed proportion of fresh fibres and/or waste paper with a further proportion of true grass of sedge of grass like aquatic plants and/or of algal fibres and auxiliaries and water where the proportion by weight of true grass sedge aquatic grass like plants and/or algal fibres is greater than (1) and smaller than 100% by weight of the entire mass of the substance always calculated as proportion of substance after oven drying. The invention further relates to a process for producing the mixture of fibrous materials and to its use for producing products containing fibrous materials.

No. of Pages : 38 No. of Claims : 17

(12) PATENT APPLICATION PUBLICATION
(19) INDIA
(22) Date of filing of Application :08/10/2014
(21) Application No.8384/DELNP/2014 A
(43) Publication Date : 08/05/2015

(54) Title of the invention : HOSE ADAPTER FOR INFLUENCING THE PRESSURE INSIDE A HOSE SECTION DURING A MEDICAL TREATMENT

(51) International classification	:A61M39/22,A61M39/24,A61M1/16
(31) Priority Document No	:10 2012 004 673.1
(32) Priority Date	:12/03/2012
(33) Name of priority country	:Germany
(86) International Application No	:PCT/EP2013/000714
Filing Date	:11/03/2013
(87) International Publication No	:WO 2013/135365
(61) Patent of Addition to Application Number	:NA
Filing Date	:NA
(62) Divisional to Application Number	:NA
Filing Date	:NA

(71)**Name of Applicant :**
1)FRESENIUS MEDICAL CARE DEUTSCHLAND GMBH
Address of Applicant :Else Kroener Str. 1 61352 Bad Homburg Germany
(72)**Name of Inventor :**
1)KLEWINGHAUS Juergen

(57) Abstract :
The present invention relates to a hose adapter (100) for connection to at least one hose section (200) of a medical device. The invention further relates to a dialysate hose system having such a hose adapter to a medical device having such a dialysate hose system to a method for using the hose adapter according to the invention and to a method for preventing the occurrence of a pressure below a minimum pressure in a dialysate hose system.

No. of Pages : 34 No. of Claims : 16

(12) PATENT APPLICATION PUBLICATION
(19) INDIA
(22) Date of filing of Application :08/10/2014
(21) Application No.8385/DELNP/2014 A
(43) Publication Date : 08/05/2015

(54) Title of the invention : THE USE OF ANTITHROMBIN IN THE TREATMENT OF PRE ECLAMPSIA

(51) International classification :A61K38/55
(31) Priority Document No :61/609534
(32) Priority Date :12/03/2012
(33) Name of priority country :U.S.A.
(86) International Application No :PCT/US2013/030350
Filing Date :12/03/2013
(87) International Publication No :WO 2013/138271
(61) Patent of Addition to Application Number :NA
Filing Date :NA
(62) Divisional to Application Number :NA
Filing Date :NA

(71)**Name of Applicant :**
1)LFB USA INC.
Address of Applicant :175 Crossing Boulevard Framingham MA 01702 9322 U.S.A.
(72)**Name of Inventor :**
1)FRIELING Johan
2)LOWRY Simon

(57) Abstract :
In one aspect the disclosure provides methods for the treatment of pre eclampsia and severe pre eclampsia comprising administering antithrombin. In some embodiments the antithrombin used in the methods disclosed herein is ATryn®.

No. of Pages : 22 No. of Claims : 21

(12) PATENT APPLICATION PUBLICATION
(19) INDIA
(22) Date of filing of Application :08/10/2014
(21) Application No.8386/DELNP/2014 A
(43) Publication Date : 08/05/2015

(54) Title of the invention : INFORMATION IDENTIFICATION DEVICE

(51) International classification :B60R16/02,H04M1/00
(31) Priority Document No :NA
(32) Priority Date :NA
(33) Name of priority country :NA
(86) International Application No :PCT/JP2012/060723
Filing Date :20/04/2012
(87) International Publication No :WO 2013/157136
(61) Patent of Addition to Application Number :NA
Filing Date :NA
(62) Divisional to Application Number :NA
Filing Date :NA

(71)**Name of Applicant :**
1)TOYOTA JIDOSHA KABUSHIKI KAISHA
Address of Applicant :1 Toyota cho Toyota shi Aichi 4718571 Japan
(72)**Name of Inventor :**
1)MAGARIDA Naofumi
2)MIZUTANI Atsushi
3)Oshiro Yuta

(57) Abstract :
The present invention improves the accuracy in identifying a portable terminal possessed by the driver among portable devices that are brought into the cabin. An information identification device which is capable of communicating with portable terminals and sensors mounted in a vehicle is configured such that when communication signals transmitted from the portable terminals that have been brought into the cabin and output signals output from the sensors are detected the portable device of the driver is identified on the basis of information pertaining to those signals.

No. of Pages : 76 No. of Claims : 15

(12) PATENT APPLICATION PUBLICATION
(19) INDIA
(22) Date of filing of Application :16/04/2014
(21) Application No.3035/DELNP/2014 A
(43) Publication Date : 08/05/2015

(54) Title of the invention : FLOW BATTERY WITH MIXED FLOW

(51) International classification :H01M2/38
(31) Priority Document No :NA
(32) Priority Date :NA
(33) Name of priority country :NA
(86) International Application No :PCT/US2011/066143
Filing Date :20/12/2011
(87) International Publication No :WO 2013/095378
(61) Patent of Addition to Application Number :NA
Filing Date :NA
(62) Divisional to Application Number :NA
Filing Date :NA

(71)**Name of Applicant :**
1)UNITED TECHNOLOGIES CORPORATION
Address of Applicant :1 Financial Plaza Hartford Connecticut 06103 U.S.A.
(72)**Name of Inventor :**
1)ZAFFOU Rachid
2)PANDY Arun
3)PERRY Michael L.

(57) Abstract :
A flow battery includes a liquid electrolyte that has an electrochemically active specie and a bipolar plate that has channels for receiving flow of the liquid electrolyte. A porous electrode is arranged immediately adjacent the bipolar plate. The porous electrode is catalytically active with regard to the liquid electrolyte. The channels of the bipolar plate have at least one of a channel arrangement or a channel shape that is configured to positively force at least a portion of the flow of the liquid electrolyte into the porous electrode.

No. of Pages : 18 No. of Claims : 18

(12) PATENT APPLICATION PUBLICATION
(19) INDIA
(22) Date of filing of Application :16/04/2014
(21) Application No.3036/DELNP/2014 A
(43) Publication Date : 08/05/2015

(54) Title of the invention : FLOW BATTERY WITH CARBON PAPER

(51) International classification :H01M2/38
(31) Priority Document No :NA
(32) Priority Date :NA
(33) Name of priority country :NA
(86) International Application No :PCT/US2011/066149
Filing Date :20/12/2011
(87) International Publication No :WO 2013/095380
(61) Patent of Addition to Application Number :NA
Filing Date :NA
(62) Divisional to Application Number :NA
Filing Date :NA

(71)**Name of Applicant :**
1)UNITED TECHNOLOGIES CORPORATION
Address of Applicant :1 Financial Plaza Hartford Connecticut 06103 U.S.A.
(72)**Name of Inventor :**
1)DARLING Robert Mason
2)STOLAR Laura Roen

(57) Abstract :
A flow battery includes a liquid electrolyte having an electrochemically active specie. A flow field plate includes a first flow field channel and a second flow field channel that is separated from the first flow field channel by a rib. There is a flow path for the liquid electrolyte to flow over the rib between the channels. An electrode is arranged adjacent the flow field plate such that the liquid electrolyte that flows over the rib must flow through the electrode. The electrode includes a carbon paper that is catalytically active with regard to liquid electrolyte. The carbon paper defines a compressive strain of less than 20% at a compressive stress of 0.8 MPa and an uncompressed porosity in the range 60 85%.

No. of Pages : 12 No. of Claims : 14

(12) PATENT APPLICATION PUBLICATION
(19) INDIA
(22) Date of filing of Application :11/01/2012
(21) Application No.328/DELNP/2012 A
(43) Publication Date : 08/05/2015

(54) Title of the invention : SYSTEM AND METHOD FOR PROCESSING MULTIMEDIA MESSAGING SERVICE

(51) International classification :G09D
(31) Priority Document No :200910140353.0
(32) Priority Date :13/07/2009
(33) Name of priority country :China
(86) International Application No :PCT/CN2010/071988
Filing Date :21/04/2010
(87) International Publication No : NA
(61) Patent of Addition to Application Number :NA
Filing Date :NA
(62) Divisional to Application Number :NA
Filing Date :NA

(71)**Name of Applicant :**
1)ZTE CORPORATION
Address of Applicant :ZTE Plaza Keji Road South Hi-Tech Industrial Park Nanshan District Shenzhen Guangdong 518057 China
(72)**Name of Inventor :**
1)ZHANG Hengsheng;

(57) Abstract :
The disclosure disclosed a system and method for processing a Multimedia Messaging Service (MMS). The system comprises: a first and second storage units for storing MMS data, a first control unit for controlling the storage of received MMS data outside the system into the first storage unit and data acquisition from the first storage unit, and a second control unit for controlling the writing of the MMS data stored in the first storage unit into the second storage unit according to performance of the second storage unit. The disclosure improves the processing performance of a Multimedia Messaging Service Center (MMSC) system, lowers the construction cost of an MMS server of the MMSC system, and guarantees the stable running of the MMSC system.

No. of Pages : 24 No. of Claims : 11

(12) PATENT APPLICATION PUBLICATION
(19) INDIA
(22) Date of filing of Application :08/10/2014
(21) Application No.8390/DELNP/2014 A
(43) Publication Date : 08/05/2015

(54) Title of the invention : MULTI COMPONENT PRESSURE TANK ASSEMBLY FOR SPRAY COATING SYSTEMS

(51) International classification :B05B9/04,B05B12/14,B05B7/24
(31) Priority Document No :61/624941
(32) Priority Date :16/04/2012
(33) Name of priority country :U.S.A.
(86) International Application No :PCT/US2013/032863
Filing Date :18/03/2013
(87) International Publication No :WO 2013/158324
(61) Patent of Addition to Application Number :NA
Filing Date :NA
(62) Divisional to Application Number :NA
Filing Date :NA

(71)**Name of Applicant :**
1)FINISHING BRANDS HOLDINGS INC.
Address of Applicant :88 11th Avenue NE Minneapolis MN 55413 U.S.A.
(72)**Name of Inventor :**
1)DROZD Mitchell M.
2)SCOTT Charles John
3)POE Christopher W.
4)REETZ Eric Ferdinand

(57) Abstract :
A system includes a pressure vessel (80) configured to receive a pneumatic flow and to supply pressurized fluid to a spray coating device. The system also includes a first chamber (84) disposed within the pressure vessel and configured to store a first fluid (90) and a second chamber (86) disposed within the pressure vessel and configured to store a second fluid (92). Furthermore the system includes a lid (82) removably coupled to the pressure vessel. The system also includes a first fluid pathway (102) extending through the lid and configured to deliver the first fluid (90) to the first chamber (84) while the lid is coupled to the pressure vessel. In addition the system includes a second fluid pathway (104) extending through the lid and configured to deliver the second fluid (92) to the second chamber (86) while the lid is coupled to the pressure vessel.

No. of Pages : 29 No. of Claims : 20

(12) PATENT APPLICATION PUBLICATION
(21) Application No.8391/DELNP/2014 A
(19) INDIA
(22) Date of filing of Application :08/10/2014
(43) Publication Date : 08/05/2015

(54) Title of the invention : DEVICE AND METHOD FOR CONTROLLING TRANSMISSION TORQUE TO PROVIDE HILL ASCENT AND/OR DESCENT ASSISTANCE

(51) International classification :F16H59/66
(31) Priority Document No :61/611952
(32) Priority Date :16/03/2012
(33) Name of priority country :U.S.A.
(86) International Application No :PCT/US2013/031926
Filing Date :15/03/2013
(87) International Publication No :WO 2013/138692
(61) Patent of Addition to Application Number :NA
Filing Date :NA
(62) Divisional to Application Number :NA
Filing Date :NA

(71)**Name of Applicant :**
1)ALLISON TRANSMISSION INC.
Address of Applicant :One Allison Way Indianapolis IN 46222 U.S.A.
(72)**Name of Inventor :**
1)SHATTUCK Jared S.
2)YORK Peter G.
3)SHULTZ Jeffrey E.

(57) Abstract :
A device system and method for controlling transmission torque to provide hill ascent and/or descent assistance to a vehicle includes applying a clutch hold pressure to one or more clutches of a transmission to lock an output shaft of the transmission to resist roll back of the vehicle. The clutch hold pressure is applied based on one or more of a transmission output speed signal an engine throttle signal and a vehicle brake signal.

No. of Pages : 35 No. of Claims : 38

(12) PATENT APPLICATION PUBLICATION
(21) Application No.8392/DELNP/2014 A
(19) INDIA
(22) Date of filing of Application :09/10/2014
(43) Publication Date : 08/05/2015

(54) Title of the invention : DUST PROTECTION FOR HIGH PRESSURE ROLLER MILL

(51) International classification :B02C4/02,B02C4/28
(31) Priority Document No :13/451903
(32) Priority Date :20/04/2012
(33) Name of priority country :U.S.A.
(86) International Application No :PCT/IB2013/053098
Filing Date :19/04/2013
(87) International Publication No :WO 2013/156967
(61) Patent of Addition to Application Number :NA
Filing Date :NA
(62) Divisional to Application Number :NA
Filing Date :NA

(71)**Name of Applicant :**
1)METSO MINERALS INDUSTRIES INC.
Address of Applicant :20965 Crossroads Circle Waukesha Wisconsin 53186 U.S.A.
(72)**Name of Inventor :**
1)REZNITCHENKO Vadim

(57) Abstract :
The invention relates to a roller crusher of the type which comprises a pair of crushing rollers is provided. The crushing rollers are generally parallel to one another and rotate in opposite directions each roller including a shaft which has end portions mounted in respective roller bearings. The roller crusher comprises a feeding arrangement for feeding material to be crushed to a crushing zone of the roller crusher. The roller crusher is characterized in that it further comprises a dust protecting enclosure enclosing the crushing zone the dust protecting enclosure having an inlet opening upstream of the crushing zone and in communication with said feeding arrangement and an outlet opening downstream of the crushing zone and in that the roller bearings are arranged outside of the dust protecting enclosure.

No. of Pages : 13 No. of Claims : 10

(12) PATENT APPLICATION PUBLICATION
(19) INDIA
(22) Date of filing of Application :09/10/2014
(21) Application No.8393/DELNP/2014 A
(43) Publication Date : 08/05/2015

(54) Title of the invention : ROLLER CRUSHER HAVING AT LEAST ONE ROLLER COMPRISING A FLANGE

(51) International classification :B02C4/30,B30B11/18,B30B15/30
(31) Priority Document No :13/451906
(32) Priority Date :20/04/2012
(33) Name of priority country :U.S.A.
(86) International Application No :PCT/EP2013/058146
Filing Date :19/04/2013
(87) International Publication No :WO 2013/156586
(61) Patent of Addition to Application Number :NA
Filing Date :NA
(62) Divisional to Application Number :NA
Filing Date :NA

(71)**Name of Applicant :**
1)METSO MINERALS (SWEDEN) AB
Address of Applicant :P.O. Box 132 S 231 22 Trelleborg Sweden
(72)**Name of Inventor :**
1)GR–NVALL Lars

(57) Abstract :
The invention relates to a roller crusher (1) having two generally parallel rollers (2) arranged to rotate in opposite directions towards each other and separated by a gap each roller (2) having a first end (3) and a second end (4). The roller crusher (1) comprises a flange (5) attached to at least one of said ends (3 4) of one of said rollers (2). The flange (5) extending in a radial direction of said roller (2) and has a height (H) above an outer surface (6) of said roller (2) which is sufficient to extend across said gap substantially along a nip angle (a) of said roller crusher (1).

No. of Pages : 15 No. of Claims : 10

(12) PATENT APPLICATION PUBLICATION
(19) INDIA
(22) Date of filing of Application :09/10/2014
(21) Application No.8394/DELNP/2014 A
(43) Publication Date : 08/05/2015

(54) Title of the invention : METHOD FOR MONITORING HIV SPECIFIC T CELL RESPONSES

(51) International classification :G01N33/50,G01N33/569
(31) Priority Document No :12382109.2
(32) Priority Date :23/03/2012
(33) Name of priority country :EPO
(86) International Application No :PCT/EP2013/056110
Filing Date :22/03/2013
(87) International Publication No :WO 2013/139972
(61) Patent of Addition to Application Number :NA
Filing Date :NA
(62) Divisional to Application Number :NA
Filing Date :NA

(71)**Name of Applicant :**
1)LABORATORIOS DEL DR. ESTEVE S.A.
Address of Applicant :Avda. Mare de Du de Montserrat 221 E 08041 Barcelona Spain
2)FUNDACI PRIVADA INSTITUT DE RECERCA DE LA SIDA CAIXA
3)INSTITUCI CATALANA DE RECERCA I ESTUDIS AVAN‡ATS
(72)**Name of Inventor :**
1)RUIZ RIOL Marta
2)BRANDER Christian
3)IBARRONDO Javier

(57) Abstract :
The invention relates to a method and a diagnostic kit for monitoring HIV specific T cell responses and identifying subjects capable of controlling HIV progression or preventing HIV infection altogether. The method is based on the combined use of boosted flow cytometry and toggle peptides and can cover a vastly larger set of effector functions than standard assays. The method is also suitable to detect T cell responses of any desirable cytokine or combination of cytokines to any pathogen.

No. of Pages : 40 No. of Claims : 29

(12) PATENT APPLICATION PUBLICATION
(19) INDIA
(22) Date of filing of Application :09/10/2014
(21) Application No.8395/DELNP/2014 A
(43) Publication Date : 08/05/2015

(54) Title of the invention : AQUEOUS PRODUCT COMPRISING OIL CONTAINING MICROCAPSULES AND METHOD FOR THE MANUFACTURE THEREOF

(51) International classification :A23P1/04,A23L1/00,A23L1/22
(31) Priority Document No :13/425941
(32) Priority Date :21/03/2012
(33) Name of priority country :U.S.A.
(86) International Application No :PCT/US2013/024111
Filing Date :31/01/2013
(87) International Publication No :WO 2013/141964
(61) Patent of Addition to Application Number :NA
Filing Date :NA
(62) Divisional to Application Number :NA
Filing Date :NA

(71)**Name of Applicant :**
1)PEPSICO INC.
Address of Applicant :700 Anderson Hill Road Purchase New York 10577 U.S.A.
(72)**Name of Inventor :**
1)GIVEN Peter S. Jr.
2)TROMP Robert Hans

(57) Abstract :
The present invention discloses microcapsules that are stable in acidic aqueous systems. The microcapsules may be utilized to protect a hydrophobic substance. The microcapsules may be utilized in acidic food products. The microcapsule include at least one hydrophobic substance and a layer around the at least one hydrophobic substance. The layer includes polysaccharide glycated protein. Methods for producing the microcapsules are also disclosed here.

No. of Pages : 35 No. of Claims : 39

(12) PATENT APPLICATION PUBLICATION
(19) INDIA
(22) Date of filing of Application :16/04/2014
(21) Application No.3053/DELNP/2014 A
(43) Publication Date : 08/05/2015

(54) Title of the invention : WEB BASED INTERFACE TO ACCESS A FUNCTION OF A BASIC INPUT/OUTPUT SYSTEM

(51) International classification :G06F9/22,G06F9/06
(31) Priority Document No :NA
(32) Priority Date :NA
(33) Name of priority country :NA
(86) International Application No :PCT/US2011/057263
Filing Date :21/10/2011
(87) International Publication No :WO 2013/058768
(61) Patent of Addition to Application Number :NA
Filing Date :NA
(62) Divisional to Application Number :NA
Filing Date :NA

(71)**Name of Applicant :**
1)HEWLETT PACKARD DEVELOPMENT COMPANY L.P.
Address of Applicant :11445 Compaq Center Drive W. Houston Texas 77070 U.S.A.
(72)**Name of Inventor :**
1)ALI Valiuddin Y.
2)PIRES Jose Paulo Xavier
3)MANN James M.
4)BALACHEFF Boris
5)DALTON Chris I.

(57) Abstract :
A web based interface in an electronic device receives a request to function of a Basic Input/Output System.

No. of Pages : 26 No. of Claims : 15

(12) PATENT APPLICATION PUBLICATION
(19) INDIA
(22) Date of filing of Application :11/01/2012
(21) Application No.327/DELNP/2012 A
(43) Publication Date : 08/05/2015

(54) Title of the invention : SKYLIGHT COVER WITH PRISMATIC DOME AND CYLINDER PORTIONS

(51) International classification :G01K
(31) Priority Document No :12/491,447
(32) Priority Date :25/06/2009
(33) Name of priority country :U.S.A.
(86) International Application No :PCT/US2010/032944
Filing Date :29/04/2010
(87) International Publication No : NA
(61) Patent of Addition to Application Number :NA
Filing Date :NA
(62) Divisional to Application Number :NA
Filing Date :NA

(71)**Name of Applicant :**
1)SOLATUBE INTERNATIONAL INC.
Address of Applicant :2210 Oak Ridge Way Vista California 92083-8341 United States of America.
(72)**Name of Inventor :**
1)Paul JASTER

(57) Abstract :
A skylight cover (21) has an upper dome portion (38) formed with plural prism elements (54) and a lower cylindrical portion (36) extending from the open periphery (40) of the dome portion (38) down to terminate in an open lower (46) end through which light can pass. A cylindrical prism ring (48) is positioned against a surface (50) of the cylindrical portion (36) and bears prisms (54) configured to refract light.

No. of Pages : 18 No. of Claims : 22

(12) PATENT APPLICATION PUBLICATION
(19) INDIA
(22) Date of filing of Application :09/10/2014
(21) Application No.8396/DELNP/2014 A
(43) Publication Date : 08/05/2015

(54) Title of the invention : METHOD FOR ENHANCING REBAUDIOSIDE D SOLUBILITY IN WATER

(51) International classification :A23L1/236,A23L2/68,C07H1/06
(31) Priority Document No :13/429473
(32) Priority Date :26/03/2012
(33) Name of priority country :U.S.A.
(86) International Application No :PCT/US2013/030707
Filing Date :13/03/2013
(87) International Publication No :WO 2013/148177
(61) Patent of Addition to Application Number :NA
Filing Date :NA
(62) Divisional to Application Number :NA
Filing Date :NA

(71)**Name of Applicant :**
1)PEPSICO INC.
Address of Applicant :700 Anderson Hill Road Purchase NY 10577 U.S.A.
(72)**Name of Inventor :**
1)MUTILANGI William
2)ZHANG Naijie

(57) Abstract :
A clear Reb D solution is prepared by adding Reb D powder to water and heating to completely dissolve the Reb D powder or by extracting Reb D from stevia plant using hot/boiling water or water/ethanol wherein the temperature of the clear Reb D solution is above 70 °C. Ideally the clear Reb D solution is mixed with with a solubilizing enhancer wherein the temperature of the enhanced Reb D solution is maintained above 70 °C and wherein the solubilizing enhancer is a hydroxyl containing sweetener. A stabilizer is then added to the Reb D solution to produce a stabilized Reb D solution; wherein the stabilizer comprises a thickener or anti agglomeration agent. The stabilized Reb D solution is spray dried to form a powder. The solubility of Rebaudioside D is enhanced in water based fluids in particular in beverage concentrates and syrups 1.

No. of Pages : 21 No. of Claims : 19

(12) PATENT APPLICATION PUBLICATION
(21) Application No.8397/DELNP/2014 A
(19) INDIA
(22) Date of filing of Application :09/10/2014
(43) Publication Date : 08/05/2015

(54) Title of the invention : WASTEWATER TREATMENT PROCESS BY ELECTROCHEMICAL APPARATUS

(51) International classification :C02F1/461
(31) Priority Document No :201210102506.4
(32) Priority Date :09/04/2012
(33) Name of priority country :China
(86) International Application No :PCT/CN2013/073754
Filing Date :03/04/2013
(87) International Publication No :WO 2013/152692
(61) Patent of Addition to Application Number :NA
Filing Date :NA
(62) Divisional to Application Number :NA
Filing Date :NA

(71)**Name of Applicant :**
1)LI Yanbo
Address of Applicant :Room 1003 Unit 1 Building 1 Zhujiangdijing Apartment Guangqu Road No.28 Chaoyang District Beijing 100022 China
2)MACDONALD HARDIE Andrew Ronald
(72)**Name of Inventor :**
1)LI Yanbo
2)MACDONALD HARDIE Andrew Ronald

(57) Abstract :
A wastewater treatment process by an electrochemical apparatus said apparatus having at least an electrochemical electrode (30) and said electrochemical electrode (30) having suitable electrode plates comprises the following steps: passing high concentration wastewater containing undesirable solutes through at least one electrochemical electrode (30) to which a DC electrical current is applied to destroy the undesirable solutes in the water intake so as to output water having a lower concentration of the undesirable solutes; the DC current applied to the electrochemical electrode (30) comprises at least a constant potential difference stage exerted on both ends of the electrochemical electrode (30) and followed by a constant current stage through the electrochemical electrode (30).

No. of Pages : 19 No. of Claims : 12

(12) PATENT APPLICATION PUBLICATION
(19) INDIA
(22) Date of filing of Application :09/10/2014
(21) Application No.8398/DELNP/2014 A
(43) Publication Date : 08/05/2015

(54) Title of the invention : PARKINSON S DISEASE BIOMARKER

(51) International classification :G01N33/68
(31) Priority Document No :1206382.2
(32) Priority Date :11/04/2012
(33) Name of priority country :U.K.
(86) International Application No :PCT/GB2013/050926
Filing Date :10/04/2013
(87) International Publication No :WO 2013/153386
(61) Patent of Addition to Application Number :NA
Filing Date :NA
(62) Divisional to Application Number :NA
Filing Date :NA

(71)**Name of Applicant :**
1)UNIVERSITY OF DUNDEE
Address of Applicant :Research & Innovation Services 11 Perth Road Dundee DD1 4HN U.K.
(72)**Name of Inventor :**
1)ALESSI Dario
2)MUQIT Muratul

(57) Abstract :
The present invention relates to a biomarker for Parkinson s disease. The biomarker and products associated with the biomarker may be used to assist diagnosis or to assess onset and/or development of Parkinson s disease. The invention also relates to use of the biomarker in clinical screening assessment of prognosis evaluation of drug treatments drug screening or drug development in the field of Parkinson s disease and Parkinson s disease related disorders.

No. of Pages : 63 No. of Claims : 10

(12) PATENT APPLICATION PUBLICATION
(19) INDIA
(22) Date of filing of Application :09/10/2014
(21) Application No.8399/DELNP/2014 A
(43) Publication Date : 08/05/2015

(54) Title of the invention : HEURISTIC SPANNING METHOD AND SYSTEM FOR LINK STATE ROUTING

(51) International classification :H04W40/22
(31) Priority Document No :61/610553
(32) Priority Date :14/03/2012
(33) Name of priority country :U.S.A.
(86) International Application No :PCT/IL2013/050229
Filing Date :12/03/2013
(87) International Publication No :WO 2013/136332
(61) Patent of Addition to Application Number :NA
Filing Date :NA
(62) Divisional to Application Number :NA
Filing Date :NA

(71)**Name of Applicant :**
1)MAXTECH COMMUNICATION NETWORKS LTD.
Address of Applicant :2 Haprat St. 81101 Yavne Israel
(72)**Name of Inventor :**
1)MATUSOVSKY Yakir
2)HANUNI Uzi
3)DAGAN Boaz

(57) Abstract :
A system and method for selecting at least one relay in a communication network; the network comprises a plurality of nodes; each of the nodes comprises at least one processing unit; each pair of the nodes is characterized by a first connection number; a first score is associated with each pair of (i) first first connection number; and (ii) second first connection number; each of the processing unit is programmed to execute the method.

No. of Pages : 24 No. of Claims : 16

(12) PATENT APPLICATION PUBLICATION
(19) INDIA
(22) Date of filing of Application :11/01/2012
(21) Application No.322/DELNP/2012 A
(43) Publication Date : 08/05/2015

(54) Title of the invention : PROCESS AND REACTOR SYSTEMS FOR CONVERTING SUGARS AND SUGAR ALCOHOLS

(51) International classification :C10L 1/19
(31) Priority Document No :61/221,942
(32) Priority Date :30/06/2009
(33) Name of priority country :U.S.A.
(86) International Application No :PCT/US2010/040644
Filing Date :30/06/2010
(87) International Publication No : NA
(61) Patent of Addition to Application Number :NA
Filing Date :NA
(62) Divisional to Application Number :NA
Filing Date :NA

(71)**Name of Applicant :**
1)Virent Inc.
Address of Applicant :3571 Anderson Street Madison WI 53704 United States of America
(72)**Name of Inventor :**
1)Paul George BLOMMEL
2)Elizabeth M. WOODS
3)Michael J. WERNER
4)Aaron James IMRIE
5)Randy D. CORTRIGHT

(57) Abstract :
Processes and reactor systems are provided for the conversion of sugars to sugar alcohols using a hydrogenation catalyst which includes apparatus and method for in-line regeneration of the hydrogenation catalyst to remove carbonaceous deposits.

No. of Pages : 28 No. of Claims : 16

(12) PATENT APPLICATION PUBLICATION
(19) INDIA
(22) Date of filing of Application :31/10/2013
(21) Application No.3221/DEL/2013 A
(43) Publication Date : 08/05/2015

(54) Title of the invention : AUTOMATIC ALERTS AND NOTIFICATIONS FOR SYSTEMS MANAGEMENT

(51) International classification :G06F
(31) Priority Document No :NA
(32) Priority Date :NA
(33) Name of priority country :NA
(86) International Application No :NA
Filing Date :NA
(87) International Publication No : NA
(61) Patent of Addition to Application Number :NA
Filing Date :NA
(62) Divisional to Application Number :NA
Filing Date :NA

(71)**Name of Applicant :**
1)UNISYS CORPORATION
Address of Applicant :C/O PATENT & TECHNOLOGY LAW GROUP MS/2NW, 801 LAKEVIEW DRIVE, SUITE 100, BLUE BELL, PA 19422, UNITED STATES OF AMERICA
(72)**Name of Inventor :**
1)MANOHARAN GOVINDARAJAN EARURNTHAVADI

(57) Abstract :
Systems and methods are disclosed herein to a method for alerting a customer of an error comprising: polling the distributed computer system for status information saved in a system events log of the distributed computer system; receiving the status information from the distributed computer system; passing the received status information into a Java messaging service queue, wherein the status information remains in the JMS queue until the status information is read; determining whether the status information includes data describing an abnormal event in the distributed computer system; referencing contact information for a concerned party of the distributed computer system from a database connected to the systems management computer when the systems management computer determines that an abnormal event has occurred in the distributed computer system; preparing an alert message including information describing the abnormal event; and sending the alert message to the concerned party using the contact information.

No. of Pages : 22 No. of Claims : 18

(12) PATENT APPLICATION PUBLICATION
(21) Application No.329/DELNP/2012 A
(19) INDIA
(22) Date of filing of Application :12/01/2012
(43) Publication Date : 08/05/2015

(54) Title of the invention : PHOTOBIOREACTORS, SOLAR ENERGY GATHERING SYSTEMS, AND THERMAL CONTROL METHODS, AND THERMAL CONTROL METHODS

(51) International classification :C12M 1/00
(31) Priority Document No :61/271,904
(32) Priority Date :28/07/2009
(33) Name of priority country :U.S.A.
(86) International Application No :PCT/US2010/043573
Filing Date :28/07/2010
(87) International Publication No :WO 2010/017171
(61) Patent of Addition to Application Number :NA
Filing Date :NA
(62) Divisional to Application Number :NA
Filing Date :NA

(71)**Name of Applicant :**
1)JOULE UNLIMITED TECHNOLOGIES, INC.
Address of Applicant :83 ROGERS, STREET CAMBRIDGE, MA 02142 (US) U.S.A.
(72)**Name of Inventor :**
1)MORGAN, FREDERICK, M
2)JACOBSON, STUART, A
3)VAN WALSEM, JOHAN

(57) Abstract :
The present invention provides photobioreactors, solar energy gathering systems, and methods for thermal control of a culture medium containing a phototrophic organism in a photobioreactor, that allow temperature control in a cost effective manner, reducing the energy required for temperature control of a culture medium containing phototrophic microorganisms in a photobioreactor.

No. of Pages : 51 No. of Claims : 96

(12) PATENT APPLICATION PUBLICATION
(19) INDIA
(22) Date of filing of Application :06/06/2014
(21) Application No.4600/DELNP/2014 A
(43) Publication Date : 08/05/2015

(54) Title of the invention : ORAL CARE COMPOSITIONS

(51) International classification :A61K8/28,A61K8/37,A61Q11/00
(31) Priority Document No :NA
(32) Priority Date :NA
(33) Name of priority country :NA
(86) International Application No :PCT/US2011/066496
Filing Date :21/12/2011
(87) International Publication No :WO 2013/105924
(61) Patent of Addition to Application Number :NA
Filing Date :NA
(62) Divisional to Application Number :NA
Filing Date :NA

(71)**Name of Applicant :**
1)COLGATE PALMOLIVE COMPANY
Address of Applicant :300 Park Avenue New York New York 10022 U.S.A.
(72)**Name of Inventor :**
1)MALONEY Venda Porter
2)CHOPRA Suman
3)LEITE Sergio
4)PAN Long
5)PATEL Rahul

(57) Abstract :
Described herein are compositions comprising zirconium amino acid complexes suspended in a hydrophobic carrier; and methods of making and using the same.

No. of Pages : 19 No. of Claims : 14

(12) PATENT APPLICATION PUBLICATION
(19) INDIA
(22) Date of filing of Application :06/06/2014
(21) Application No.4601/DELNP/2014 A
(43) Publication Date : 08/05/2015

(54) Title of the invention : REMOVAL OF COMPONENTS FROM A STARTING MATERIAL

(51) International classification :C02F9/00,B01J49/00
(31) Priority Document No :1121950.8
(32) Priority Date :19/12/2011
(33) Name of priority country :U.K.
(86) International Application No :PCT/GB2012/053168
Filing Date :18/12/2012
(87) International Publication No :WO 2013/093444
(61) Patent of Addition to Application Number :NA
Filing Date :NA
(62) Divisional to Application Number :NA
Filing Date :NA

(71)**Name of Applicant :**
1)EUROPEAN SUGAR HOLDINGS S.A.R.L.
Address of Applicant :75 Parc dActivites Capellen L 8308 Capellen Luxembourg
(72)**Name of Inventor :**
1)BAIADA Anthony
2)KERR John
3)BARTALUCCI Tommaso
4)WINDEBANK Tim

(57) Abstract :
The present invention relates to a process and more specifically to a process for the removal of components from a starting material. Optionally the process is used for the removal of contaminants from ion exchange regenerant material.

No. of Pages : 36 No. of Claims : 19

(12) PATENT APPLICATION PUBLICATION
(19) INDIA
(22) Date of filing of Application :09/10/2014
(21) Application No.8400/DELNP/2014 A
(43) Publication Date : 08/05/2015

(54) Title of the invention : COMPOSITIONS AND METHODS FOR TREATMENT OF PAIN

(51) International classification :A61K36/185,A61K36/28,A61K33/38
(31) Priority Document No :61/685352
(32) Priority Date :15/03/2012
(33) Name of priority country :U.S.A.
(86) International Application No :PCT/US2013/030448
Filing Date :12/03/2013
(87) International Publication No :WO 2013/138306
(61) Patent of Addition to Application Number :NA
Filing Date :NA
(62) Divisional to Application Number :NA
Filing Date :NA

(71)**Name of Applicant :**
1)PRINCETON BIOTECHNOLOGY CORPORATION
Address of Applicant :1304 202 Hancock Drive Barrington NJ 08007 U.S.A.
(72)**Name of Inventor :**
1)DEMURO Frank

(57) Abstract :
The present invention relates to a homeopathic formulation comprising dilutions of Arnica Calendula Echinacea Hypericum Silver Sulfur Thiosinaminum Urtica and methods for treating pain inflammation scar tissue itching/pruritus and infection using same.

No. of Pages : 39 No. of Claims : 20

(12) PATENT APPLICATION PUBLICATION
(21) Application No.8401/DELNP/2014 A
(19) INDIA
(22) Date of filing of Application :09/10/2014
(43) Publication Date : 08/05/2015

(54) Title of the invention : PATIENT MATCHING SURGICAL GUIDE AND METHOD FOR USING THE SAME

(51) International classification :A61B5/05
(31) Priority Document No :61/625559
(32) Priority Date :17/04/2012
(33) Name of priority country :U.S.A.
(86) International Application No :PCT/US2013/036535
Filing Date :15/04/2013
(87) International Publication No :WO 2013/158521
(61) Patent of Addition to Application Number :NA
Filing Date :NA
(62) Divisional to Application Number :NA
Filing Date :NA

(71)**Name of Applicant :**
1)FREY George
Address of Applicant :2 Sunrise Drive Englewood CO 80113 U.S.A.
(72)**Name of Inventor :**
1)FREY George

(57) Abstract :
A system and method for developing customized apparatus for use in one or more surgical procedures is disclosed. The system and method incorporates a patient s unique anatomical features or morphology which may be derived from capturing MRI data or CT data to fabricate at least one custom apparatus. According to a preferred embodiment the customized apparatus comprises a plurality of complementary surfaces based on a plurality of data points from the MRI or CT data. Thus each apparatus may be matched in duplicate and oriented around the patient s own anatomy and may further provide any desired axial alignments or insertional trajectories. In an alternate embodiment the apparatus may further be aligned and/or matched with at least one other apparatus used during the surgical procedure.

No. of Pages : 78 No. of Claims : 20

(12) PATENT APPLICATION PUBLICATION
(19) INDIA
(22) Date of filing of Application :06/06/2014
(21) Application No.4597/DELNP/2014 A
(43) Publication Date : 08/05/2015

(54) Title of the invention : STOP CONTROL DEVICE OF INTERNAL COMBUSTION ENGINE

(51) International classification :F02D17/00,B60K6/445,B60W10/06
(31) Priority Document No :NA
(32) Priority Date :NA
(33) Name of priority country :NA
(86) International Application No :PCT/JP2011/078914
Filing Date :14/12/2011
(87) International Publication No :WO 2013/088526
(61) Patent of Addition to Application Number :NA
Filing Date :NA
(62) Divisional to Application Number :NA
Filing Date :NA

(71)**Name of Applicant :**
1)TOYOTA JIDOSHA KABUSHIKI KAISHA
Address of Applicant :1 Toyota cho Toyota shi Aichi 4718571 Japan
(72)**Name of Inventor :**
1)TSUKADA Yuta

(57) Abstract :
A stop control device of an internal combustion engine comprises: a motor (MG1) capable of outputting torque to a crankshaft (205) of an internal combustion engine (200); speed detection means (110) for detecting the speed of the internal combustion engine; crank angle detection means (120) for detecting the crank angle of the crankshaft of the internal combustion engine; motor control means (150) for controlling the motor so that when the internal combustion engine stops regulatory torque is outputted for regulating so that the crank angle at the time of the internal combustion engine stopping reaches a desired value; throttle valve control means (160) for performing control so that the opening degree of a throttle valve (208) reaches a predetermined opening degree during the intake stroke immediately before the internal combustion engine stops; and regulatory torque determination means (140) for determining the regulatory torque on the basis of the crank angle and the predetermined opening degree at the time the speed of the internal combustion engine reaches the predetermined value. Control of the crank angle is thereby suitably performed when the internal combustion engine stops.

No. of Pages : 45 No. of Claims : 5

(12) PATENT APPLICATION PUBLICATION
(21) Application No.4599/DELNP/2014 A
(19) INDIA
(22) Date of filing of Application :06/06/2014
(43) Publication Date : 08/05/2015

(54) Title of the invention : COMPOSITIONS FOR PHOTODYNAMIC THERAPY CHEMICALLY MODIFIED TO INCREASE EPITHELIA PENETRATION AND CELLULAR BIOAVAILABILITY

(51) International classification	:A61K31/7064
(31) Priority Document No	:61/568028
(32) Priority Date	:07/12/2011
(33) Name of priority country	:U.S.A.
(86) International Application No	:PCT/IB2012/002794
Filing Date	:07/12/2012
(87) International Publication No	:WO 2013/084061
(61) Patent of Addition to Application Number	:NA
Filing Date	:NA
(62) Divisional to Application Number	:NA
Filing Date	:NA

(71)**Name of Applicant :**
1)YAGNA LIMITED
Address of Applicant :19 Nutter Lane Wanstead Redbridge London E11 2HZ U.K.
(72)**Name of Inventor :**
1)TRIGIANTE Giussepe

(57) Abstract :
The present invention describes a photodynamic prodrug i.e. a substituted 4 thiothymidine (4 TT) which is able to cross the body s epithelia tissues such as the skin oral cavity nasal cavity pulmonary tract digestive tract and blood brain barrier including the use of such a prodrug in a topical application for the treatment of skin hyperplasias including skin cancer psoriasis keloids actinic keratosis and the like.

No. of Pages : 34 No. of Claims : 27

(12) PATENT APPLICATION PUBLICATION
(19) INDIA
(22) Date of filing of Application :09/10/2014
(21) Application No.8406/DELNP/2014 A
(43) Publication Date : 08/05/2015

(54) Title of the invention : METHODS AND SYSTEMS FOR PREVENTING WRINKLES IN A WEB FED THROUGH AN ACCUMULATOR

(51) International classification :B65H21/00,B65H27/00,B65H19/14
(31) Priority Document No :61/639488
(32) Priority Date :27/04/2012
(33) Name of priority country :U.S.A.
(86) International Application No :PCT/US2013/037736
Filing Date :23/04/2013
(87) International Publication No :WO 2013/163141
(61) Patent of Addition to Application Number :NA
Filing Date :NA
(62) Divisional to Application Number :NA
Filing Date :NA

(71)**Name of Applicant :**
1)THE PROCTER & GAMBLE COMPANY
Address of Applicant :One Procter & Gamble Plaza Cincinnati Ohio 45202 U.S.A.
(72)**Name of Inventor :**
1)LENSER Todd Douglas

(57) Abstract :
Methods and systems for preventing wrinkles in a web passing through an accumulator. The accumulator (20) comprises a plurality of rollers (28 30) including at least one roller having an axis of revolution movable toward and away from the axis of revolution of another roller to release and store varying amounts of the web. At least one of the rollers has a nominally flat outer surface and at least one of the rollers has a concave profiled outer surface.

No. of Pages : 31 No. of Claims : 14

(12) PATENT APPLICATION PUBLICATION
(19) INDIA
(22) Date of filing of Application :09/10/2014
(21) Application No.8407/DELNP/2014 A
(43) Publication Date : 08/05/2015

(54) Title of the invention : ACTIVATED IMMUNOSTIMULATORY CELL COMPOSITION FOR THERAPY OF INFECTION

(51) International classification :A61K35/12
(31) Priority Document No :61/611180
(32) Priority Date :15/03/2012
(33) Name of priority country :U.S.A.
(86) International Application No :PCT/IB2013/000935
Filing Date :13/03/2013
(87) International Publication No :WO 2013/136191
(61) Patent of Addition to Application Number :NA
Filing Date :NA
(62) Divisional to Application Number :NA
Filing Date :NA

(71)**Name of Applicant :**
1)MACROCURE LTD.
Address of Applicant :9 Bareket Street P.O. Box 7988 Kiryat Matalon 49250 Petach Tikva Israel
(72)**Name of Inventor :**
1)GINIS Irene
2)SMITH Alan
3)BUBIS Marina
4)SHIRVAN Mitchell

(57) Abstract :
Methods of making activated immunostimulatory cell compositions activated immunostimulatory cell compositions and methods of using those compositions to stimulate therapeutic immune responses to infectious organisms are described.

No. of Pages : 75 No. of Claims : 16

(12) PATENT APPLICATION PUBLICATION
(19) INDIA
(22) Date of filing of Application :09/10/2014
(21) Application No.8408/DELNP/2014 A
(43) Publication Date : 08/05/2015

(54) Title of the invention : SYSTEM WHICH PROVIDES CONTENT

(51) International classification :G01N27/62
(31) Priority Document No :2012100141
(32) Priority Date :25/04/2012
(33) Name of priority country :Japan
(86) International Application No :PCT/JP2013/002833
Filing Date :25/04/2013
(87) International Publication No :WO 2013/161315
(61) Patent of Addition to Application Number :NA
Filing Date :NA
(62) Divisional to Application Number :NA
Filing Date :NA

(71)**Name of Applicant :**
1)ATONARP INC.
Address of Applicant :16 1 Tenjin cho Hachioji shi Tokyo 1920074 Japan
(72)**Name of Inventor :**
1)MURTHY Prakash Sreedhar

(57) Abstract :
Provided is a system (40) which provides content (CC) with respect to a search request including spectrum data (ASD) which is obtained by a sensor (61) said content being associated with context information (Cx) which is estimated from the spectrum data (ASD). The system (40) comprises: a database (44) including a plurality of context information (Cx) and a plurality of stocked spectrum data (SSD) which is respectively ranked with respect to the plurality of context information (Cx); a comparison unit (45a) which computes a score of the stocked spectrum data with respect to the obtained spectrum data (ASD); and an output unit (46) which outputs the content (CC) which is associated with the context information (Cx) so as to be selected in descending order by score and rank.

No. of Pages : 116 No. of Claims : 14

(12) PATENT APPLICATION PUBLICATION
(19) INDIA
(22) Date of filing of Application :11/01/2012
(21) Application No.325/DELNP/2012 A
(43) Publication Date : 08/05/2015

(54) Title of the invention : SYSTEMS AND METHODS FOR ZIPKNOT ACL FIXATION

(51) International classification :G01R
(31) Priority Document No :61/222,574
(32) Priority Date :02/07/2009
(33) Name of priority country :U.S.A.
(86) International Application No :PCT/US2010/040796
Filing Date :01/07/2010
(87) International Publication No : NA
(61) Patent of Addition to Application Number :NA
Filing Date :NA
(62) Divisional to Application Number :NA
Filing Date :NA

(71)**Name of Applicant :**
1)IMDS CORPORATION
Address of Applicant :124 SOUTH 600 WEST LOGAN UTAH 84321 UNITED STATES OF AMERICA
(72)**Name of Inventor :**
1)M. Mary SINNOTT
2)Daniel F. JUSTIN
3)Andrew FAUTH
4)Chad LEWIS
5)Stuart GOBLE
6)Karen E. MOHR

(57) Abstract :
A system and method for securing an ACL graft. The system may comprise a line routed through a plate. The plate comprising an elongated body with a plurality of passageways and a dogbone feature on one end. The line routed such to create at least one one-way slide so no knots are required. The line may comprise an adjustable loop that receives the graft. The adjustable loop is adjustable through the one-way slide feature of the line routed around and through the plate. The plate may be configured to pass through a bone tunnel with the use of filaments routed through the passageways of the plate or around the dogbone feature of the plate. The filaments may be used to toggle the plate after passage through the bone tunnel to prevent withdrawal back through the bone tunnel because the plate contact area is larger the bone tunnel area.

No. of Pages : 43 No. of Claims : 48

(12) PATENT APPLICATION PUBLICATION
(21) Application No.4592/DELNP/2014 A
(19) INDIA
(22) Date of filing of Application :06/06/2014
(43) Publication Date : 08/05/2015

(54) Title of the invention : PROCESS FOR THE CATALYTIC REMOVAL OF CARBON DIOXIDE NOX FROM EXHAUST GASES

(51) International classification :B01D53/86,B01J21/18
(31) Priority Document No :91 900
(32) Priority Date :14/11/2011
(33) Name of priority country :Luxembourg
(86) International Application No :PCT/EP2012/072286
Filing Date :09/11/2012
(87) International Publication No :WO 2013/072257
(61) Patent of Addition to Application Number :NA
Filing Date :NA
(62) Divisional to Application Number :NA
Filing Date :NA

(71)**Name of Applicant :**
1)CPPE CARBON PROCESS & PLANT ENGINEERING S.A.
Address of Applicant :Rue de la Cimenterie L 1337 Luxembourg Dommeldange Luxembourg
(72)**Name of Inventor :**
1)STRICKROTH Alain

(57) Abstract :
The present invention relates to a process for the catalytic removal of carbon dioxide and NO from exhaust gases in a reactor filled with activated carbon based catalyst. The process comprises the following steps: a. saturation of the catalyst with water; b. saturation or partial saturation of the exhaust gases with water; c. introduction of the exhaust gases into the reactor; d. catalytic conversion of NO to NO and in parallel catalytic conversion of CO to carbon and O on the same catalyst; e. washing out the active carbon based catalyst with water and discharging of the carbon as a solid as well as NO dissolved in water or in the base.

No. of Pages : 34 No. of Claims : 14

(12) PATENT APPLICATION PUBLICATION
(21) Application No.8412/DELNP/2014 A
(19) INDIA
(22) Date of filing of Application :09/10/2014
(43) Publication Date : 08/05/2015

(54) Title of the invention : COMPOSITIONS METHODS AND SYSTEMS FOR SEPARATING CARBON BASED NANOSTRUCTURES

(51) International classification :C01B31/02
(31) Priority Document No :61/643462
(32) Priority Date :07/05/2012
(33) Name of priority country :U.S.A.
(86) International Application No :PCT/US2013/031571
Filing Date :14/03/2013
(87) International Publication No :WO 2013/184214
(61) Patent of Addition to Application Number :NA
Filing Date :NA
(62) Divisional to Application Number :NA
Filing Date :NA

(71)**Name of Applicant :**
1)MASSACHUSETTS INSTITUTE OF TECHNOLOGY
Address of Applicant :77 Massachusetts Avenue Cambridge MA 02139 U.S.A.
(72)**Name of Inventor :**
1)STRANO Michael S.
2)MCNICHOLAS Thomas P.
3)HILMER Andrew J.
4)JAIN Rishabh M.
5)TVRDY Kevin C.

(57) Abstract :
The present invention generally relates to compositions methods and systems for separating carbon based nanostructures.

No. of Pages : 68 No. of Claims : 18

(12) PATENT APPLICATION PUBLICATION
(19) INDIA
(22) Date of filing of Application :09/10/2014
(21) Application No.8413/DELNP/2014 A
(43) Publication Date : 08/05/2015

(54) Title of the invention : IMPROVEMENTS IN OR RELATING TO ORGANIC COMPOUNDS

(51) International classification :C07C29/147,C07C29/149
(31) Priority Document No :1208589.0
(32) Priority Date :16/05/2012
(33) Name of priority country :U.K.
(86) International Application No :PCT/EP2013/060150
Filing Date :16/05/2013
(87) International Publication No :WO 2013/171302
(61) Patent of Addition to Application Number :NA
Filing Date :NA
(62) Divisional to Application Number :NA
Filing Date :NA

(71)**Name of Applicant :**
1)GIVAUDAN SA
Address of Applicant :Chemin de la Perfumerie 5 CH 1214 Vernier Switzerland
(72)**Name of Inventor :**
1)GEISSER Roger Wilhelm
2)GOEKE Andreas
3)SCHROEDER Fridtjof

(57) Abstract :
The chemoselective reduction of a carboxylic ester (I) to an alcohol by catalytic hydrogenation in particular in the presence of a transition metal complex more particularly in the presence of a ruthenium (II) complex is described.

No. of Pages : 23 No. of Claims : 20

(12) PATENT APPLICATION PUBLICATION
(21) Application No.8415/DELNP/2014 A
(19) INDIA
(22) Date of filing of Application :09/10/2014
(43) Publication Date : 08/05/2015

(54) Title of the invention : MULTILAYER FILM

(51) International classification :B32B7/06,B32B7/12
(31) Priority Document No :NA
(32) Priority Date :NA
(33) Name of priority country :NA
(86) International Application No :PCT/US2012/032293
Filing Date :05/04/2012
(87) International Publication No :WO 2013/151547
(61) Patent of Addition to Application Number :NA
Filing Date :NA
(62) Divisional to Application Number :NA
Filing Date :NA

(71)**Name of Applicant :**
1)AVERY DENNISON CORPORATION
Address of Applicant :150 N. Orange Grove Blvd. Pasadena CA 91103 U.S.A.
(72)**Name of Inventor :**
1)ARNAUD Francis

(57) Abstract :
The present invention is directed to a multilayer film including the layered configuration of a print layer with the layered configuration of a printable surface coating and a voided thermoplastic material where the printable surface coating has an embossed surface that extends to the voided thermoplastic material; an adhesive layer; and a liner.

No. of Pages : 20 No. of Claims : 59

(12) PATENT APPLICATION PUBLICATION
(21) Application No.8416/DELNP/2014 A
(19) INDIA
(22) Date of filing of Application :09/10/2014
(43) Publication Date : 08/05/2015

(54) Title of the invention : MINERAL COMPOSITION MADE FROM A MIXED SOLID PHASE OF CALCIUM AND MAGNESIUM CARBONATES METHOD OF PREPARING SAME AND USE THEREOF

(51) International classification :C04B2/10,C04B14/26,C04B18/02
(31) Priority Document No :BE 2012/0199
(32) Priority Date :22/03/2012
(33) Name of priority country :Belgium
(86) International Application No :PCT/EP2013/056058
Filing Date :22/03/2013
(87) International Publication No :WO 2013/139957
(61) Patent of Addition to Application Number :NA
Filing Date :NA
(62) Divisional to Application Number :NA
Filing Date :NA

(71)**Name of Applicant :**
1)S.A. LHOIST RECHERCHE ET DEVELOPPEMENT
Address of Applicant :rue Charles Dubois 28 B 1342 Ottignies Louvain la Neuve Belgium
(72)**Name of Inventor :**
1)LORGOUILLOUX Marion
2)G„RTNER Robert Sebastian
3)PELLETIER Marc
4)CHOPIN Thierry

(57) Abstract :
A mineral composition made from a mixed solid phase of calcium and magnesium carbonates method of preparing same and use thereof. A mineral composition made from a mixed solid phase of calcium and magnesium carbonates formed from a crystallised calcium portion and a crystallised magnesium portion in the form of platelets the crystals of the calcium portion and those of the magnesium portion being aggregated in the form of composite aggregates said aggregates themselves being at least partially agglomerated said calcium portion comprising at least one carbonate chosen from the group consisting of calcite aragonite and the mixtures thereof said magnesium portion comprising hydromagnesite in platelet form said mixed solid phase having a bulk density less than or equal to 250 kg/m and greater than or equal to 80 kg/m3 measured according to standard EN 459.2.

No. of Pages : 29 No. of Claims : 27

(12) PATENT APPLICATION PUBLICATION
(21) Application No.312/DELNP/2012 A
(19) INDIA
(22) Date of filing of Application :11/01/2012
(43) Publication Date : 08/05/2015

(54) Title of the invention : PROTEASES WITH MODIFIED PRE-PRO REGIONS

(51) International classification :C12N 9/54
(31) Priority Document No :61/230,247
(32) Priority Date :31/07/2009
(33) Name of priority country :U.S.A.
(86) International Application No :PCT/US2010/031283
Filing Date :15/04/2010
(87) International Publication No :WO 2011/014278
(61) Patent of Addition to Application Number :NA
Filing Date :NA
(62) Divisional to Application Number :NA
Filing Date :NA

(71)**Name of Applicant :**
1)DANISCO US INC.
Address of Applicant :925 PAGE MILL ROAD, PALO ALTO, CALIFORNIA 94304, USA U.S.A.
(72)**Name of Inventor :**
1)PISARCHIK ALEXANDER
2)SCHMIDT BRIAN F.

(57) Abstract :
The invention relates to modified polynucleotides encoding modified proteases, and methods for altering the production of proteases in microorganisms. In particular, the modified polynucleotides comprise one or more mutations that encode modified proteases having modifications of the pre-pro region that enhance the production of the active enzyme. The present invention further relates to methods for altering the production of proteases in microorganisms, such as Bacillus species.

No. of Pages : 172 No. of Claims : 36

(12) PATENT APPLICATION PUBLICATION
(19) INDIA
(22) Date of filing of Application :09/10/2014
(21) Application No.8420/DELNP/2014 A
(43) Publication Date : 08/05/2015

(54) Title of the invention : INSECT ATTRACTANT FORMULATIONS AND INSECT CONTROL

(51) International classification :A01P19/00,A01P7/04,A01N25/04
(31) Priority Document No :61/646565
(32) Priority Date :14/05/2012
(33) Name of priority country :U.S.A.
(86) International Application No :PCT/US2013/040901
Filing Date :14/05/2013
(87) International Publication No :WO 2013/173300
(61) Patent of Addition to Application Number :NA
Filing Date :NA
(62) Divisional to Application Number :NA
Filing Date :NA

(71)**Name of Applicant :**
1)DOW AGROSCIENCES LLC
Address of Applicant :9330 Zionsville Road Indianapolis IN 46268 1054 U.S.A.
(72)**Name of Inventor :**
1)GOMEZ Luis Enrique
2)COEN Christina Elizabeth

(57) Abstract :
Bactrocera dorsalisBactrocera cucurbitaeAn insect control formulation including methyl eugenol cue lure and a biodegradable wax carrier is a surprisingly effective attractant for Oriental fruit flies () and Melon flies (). Formulation embodiments that include at least one insect toxicant are surprisingly effective for use in fruit fly MAT attract and kill systems and are suitable for on crop or off crop uses. Formulation embodiments can be provided as aqueous emulsions having viscosities appropriate for use in aerial or backpack spray applications or for delivery using caulk gun type or grease pump type devices. Other formulation embodiments can be provided as solid blocks granules or powders.

No. of Pages : 46 No. of Claims : 48

(12) PATENT APPLICATION PUBLICATION
(19) INDIA
(22) Date of filing of Application :09/10/2014
(21) Application No.8421/DELNP/2014 A
(43) Publication Date : 08/05/2015

(54) Title of the invention : NOVEL DOSAGE AND FORMULATION

(51) International classification :A61K31/46,A61M15/00,A61P11/06
(31) Priority Document No :12382211.6
(32) Priority Date :25/05/2012
(33) Name of priority country :EPO
(86) International Application No :PCT/EP2013/060808
Filing Date :24/05/2013
(87) International Publication No :WO 2013/175013
(61) Patent of Addition to Application Number :NA
Filing Date :NA
(62) Divisional to Application Number :NA
Filing Date :NA

(71)**Name of Applicant :**
1)ALMIRALL S.A.
Address of Applicant :Ronda del General Mitre 151 E 08022 Barcelona Spain
(72)**Name of Inventor :**
1)LAMARCA CASADO Rosa
2)DE MIQUEL SERRA Gonzalo

(57) Abstract :
A pharmaceutical composition for inhalation comprising aclidinium in the form of a dry powder of a pharmaceutically acceptable salt in admixture with a pharmaceutically acceptable dry powder carrier providing a delivered dose of aclidinium equivalent to about 322 micrograms aclidinium free base.

No. of Pages : 20 No. of Claims : 26

(12) PATENT APPLICATION PUBLICATION
(19) INDIA
(22) Date of filing of Application :09/10/2014
(21) Application No.8422/DELNP/2014 A
(43) Publication Date : 08/05/2015

(54) Title of the invention : ELECTRICALLY DRIVEN RAPIDLY VAPORIZING FOILS WIRES AND STRIPS USED FOR COLLISION WELDING AND SHEET METAL FORMING

(51) International classification :C25D2/00
(31) Priority Document No :61/620500
(32) Priority Date :05/04/2012
(33) Name of priority country :U.S.A.
(86) International Application No :PCT/US2013/035207
Filing Date :04/04/2013
(87) International Publication No :WO 2013/152153
(61) Patent of Addition to Application Number :NA
Filing Date :NA
(62) Divisional to Application Number :NA
Filing Date :NA

(71)**Name of Applicant :**
1)THE OHIO STATE UNIVERSITY
Address of Applicant :1524 North High Street Columbus OH 43201 U.S.A.
(72)**Name of Inventor :**
1)VIVEK Anupam
2)DAEHN Glenn S.
3)TABER Geoffrey A.
4)JOHNSON Jason R.

(57) Abstract :
A method for forming a piece of a sheet metal is performed by positioning a consumable body made of metal proximate to the piece of the sheet metal. The consumable body is rapidly vaporized and the gas pressure generated thereby is directed into the piece of the sheet metal. This results in acceleration of the piece of sheet metal and it is collided into a stationary body at a velocity generally in excess of 200 m/s. Depending upon the type of stationary body the piece of sheet metal is deformed into a predetermined shape or is welded onto the stationary body. The vaporization is accomplished by passing a high current of electricity into the consumable body. The effect of the vaporized metal may be augmented by additional components in the consumable body.

No. of Pages : 23 No. of Claims : 18

(12) PATENT APPLICATION PUBLICATION
(19) INDIA
(22) Date of filing of Application :09/10/2014
(21) Application No.8423/DELNP/2014 A
(43) Publication Date : 08/05/2015

(54) Title of the invention : CATALYSTS FOR THE PRODUCTION OF ACRYLIC ACID OR ITS DERIVATIVES

(51) International classification :C07C57/04
(31) Priority Document No :61/623054
(32) Priority Date :11/04/2012
(33) Name of priority country :U.S.A.
(86) International Application No :PCT/US2013/036163
Filing Date :11/04/2013
(87) International Publication No :WO 2013/155297
(61) Patent of Addition to Application Number :NA
Filing Date :NA
(62) Divisional to Application Number :NA
Filing Date :NA

(71)**Name of Applicant :**
1)THE PROCTER & GAMBLE COMPANY
Address of Applicant :One Procter & Gamble Plaza Cincinnati Ohio 45202 U.S.A.
(72)**Name of Inventor :**
1)VELASQUEZ Juan Esteban
2)LINGOES Janette Villalobos
3)COLLIAS Dimitris Ioannis
4)GODLEWSKI Jane Ellen
5)MAMAK Marc Andrew

(57) Abstract :
Catalysts for dehydrating hydroxypropionic acid hydroxypropionic acid derivatives or mixtures thereof to acrylic acid acrylic acid derivatives or mixtures thereof with high yield and selectivity short residence time and without significant conversion to undesired side products such as for example acetaldehyde propionic acid and acetic acid are provided. The catalysts are mixed protonated monophosphates. Methods of preparing the catalysts are also provided.

No. of Pages : 30 No. of Claims : 15

(12) PATENT APPLICATION PUBLICATION
(19) INDIA
(22) Date of filing of Application :10/01/2012
(21) Application No.282/DELNP/2012 A
(43) Publication Date : 08/05/2015

(54) Title of the invention : NUTRITIONAL COMPOSITION FOR BREAST-FED INFANTS OR PETS WITH PROBIOTICS AND SELECTED NUTRIENTS

(51) International classification :A61K 35/74
(31) Priority Document No :09166969.7
(32) Priority Date :31/07/2009
(33) Name of priority country :EPO
(86) International Application No :PCT/EP2010/060973
Filing Date :28/07/2010
(87) International Publication No :WO 2011/012655
(61) Patent of Addition to Application Number :NA
Filing Date :NA
(62) Divisional to Application Number :NA
Filing Date :NA

(71)**Name of Applicant :**
1)NESTEC S.A.
Address of Applicant :AVENUE NESTLE 55, CH-1800 VEVEY, SWITZERLAND
(72)**Name of Inventor :**
1)BERGONZELLI DEGONDA, GABRIELA
2)BUREAU-FRANZ, ISABELLE
3)GARCIA-RODENAS, CLARA LUCIA
4)MAGLIOLA, CORINNE

(57) Abstract :
The present invention relates to a nutritional supplement compositions for breast-fed infants or pets which comprise at least one probiotic and at least one nutrient. The compositions are aimed at preserving exclusive breast feeding in infants. The compositions of the invention are also for use in improving the health of breast-fed infants. A method of preparing a nutritional supplement composition for breast-fed infants is also provided.

No. of Pages : 24 No. of Claims : 20

(12) PATENT APPLICATION PUBLICATION
(19) INDIA
(22) Date of filing of Application :11/01/2012
(21) Application No.315/DELNP/2012 A
(43) Publication Date : 08/05/2015

(54) Title of the invention : LOSS MEASUREMENT FOR MULTICAST DATA DELIVERY

(51) International classification :H04L 12/26
(31) Priority Document No :NA
(32) Priority Date :NA
(33) Name of priority country :NA
(86) International Application No :PCT/EP2009/058878
Filing Date :10/07/2009
(87) International Publication No :WO 2011/003478
(61) Patent of Addition to Application Number :NA
Filing Date :NA
(62) Divisional to Application Number :NA
Filing Date :NA

(71)**Name of Applicant :**
1)TELEFONAKTIEBOLAGET LM ERICSSON (PUBL)
Address of Applicant :SE-164 83 STOCKHOLM (SE) Sweden
(72)**Name of Inventor :**
1)JOCHA, DAVID
2)FARKAS, JANOS

(57) Abstract :
A method of measuring loss in a multicast transmission in a network is described. Service frames including a service multicast destination address are sent from a source node towards a receiving node. A counter of the number of service frames sent is maintained at the source node. This counter is periodically read, and its value copied into a loss measurement OAM frame. The loss measurement OAM frame includes a unique identifier and an OAM destination address which is different to the service multicast destination address, and is sent from the source node towards the receiving node. Every time the sent frames counter is read, a measurement indicator frame is also sent from the source node towards the receiving node. The measurement indicator frame includes the unique identifier so that it can be related to the loss measurement OAM frame. The measurement indicator frame also includes the service multicast destination address, although the measurement indicator frame is distinguishable from the service frames. The receiving node eventually receives the loss measurement OAM frame and the measurement indicator frame, and calculates the number of lost or delayed service frames by comparing the number of service frames received at the receiving node at the time the measurement indicator frame is received with the sent frames counter value contained in the loss measurement OAM frame. The calculation is only performed when the loss measurement OAM frame and measurement indicator frame having the same identifier have been received by the receiving node.

No. of Pages : 27 No. of Claims : 19

(12) PATENT APPLICATION PUBLICATION
(19) INDIA
(22) Date of filing of Application :31/10/2013
(21) Application No.3228/DEL/2013 A
(43) Publication Date : 08/05/2015

(54) Title of the invention : TEST SYSTEM FOR DETERMINATION OF PRE-FORMED FRAGMENT DISPERSION

(51) International classification :G06T
(31) Priority Document No :NA
(32) Priority Date :NA
(33) Name of priority country :NA
(86) International Application No :NA
Filing Date :NA
(87) International Publication No : NA
(61) Patent of Addition to Application Number :NA
Filing Date :NA
(62) Divisional to Application Number :NA
Filing Date :NA

(71)**Name of Applicant :**
1)DIRECTOR GENERAL, DEFENCE RESEARCH & DEVELOPMENT ORGANIZATION
Address of Applicant :Defence Research & Development, Organization, Ministry of Defence , Govt. of India, DRDO Bhavan, 3rd - Floor, B-Block, Rajaji Marg, New Delhi-110011 Delhi India
(72)**Name of Inventor :**
1)Kusumkant Devendra Dhote
2)Paras Nath Verma
3)Murthy Krothapalli

(57) Abstract :
The present invention describes a test system for determination of dispersion of pre-formed fragments from a fragment generator. More particularly, the present invention relates to a test system for determination of projection angle and velocity of a fragment dispersed from a fragment generator. The test system comprises of a soft target which is made up of plywood sheet and straw boards, a fragment generator positioned at a predetermined distance from the soft target and a high speed camera kept inside a shelter and positioned at a predetermined position and angle from the soft target and the fragment generator. The test system can be used for development of statistical predictive models for single/multi-layered fragment generators

No. of Pages : 14 No. of Claims : 8

(12) PATENT APPLICATION PUBLICATION
(19) INDIA
(22) Date of filing of Application :09/10/2014
(21) Application No.8430/DELNP/2014 A
(43) Publication Date : 08/05/2015

(54) Title of the invention : ELECTROCHEMICAL DETECTION METHOD

(51) International classification :G01N27/02,G01N27/327
(31) Priority Document No :1207583.4
(32) Priority Date :01/05/2012
(33) Name of priority country :U.K.
(86) International Application No :PCT/GB2013/051124
Filing Date :01/05/2013
(87) International Publication No :WO 2013/164613
(61) Patent of Addition to Application Number :NA
Filing Date :NA
(62) Divisional to Application Number :NA
Filing Date :NA

(71)**Name of Applicant :**
1)ISIS INNOVATION LTD
Address of Applicant :Ewert House Ewert Place Summertown Oxford Oxfordshire OX2 7SG U.K.
2)UNIVERSIDADE ESTADUAL PAULISTA JULIO DE MESQUITA FILHO
(72)**Name of Inventor :**
1)DAVIS Jason
2)BUENO Paulo Roberto

(57) Abstract :
Electrochemical detection method and related aspects Herein is disclosed an electrochemical test method comprising (i) comparing how a plurality of immittance functions and/or components thereof vary with a change in a parameter of interest for a first system and then selecting an immittance function or component thereof for use in an electrochemical test; (ii) carryingout an electrochemical test step for a second system to determine at least one value for the immittance function or component thereof selected in step (i) and then by using a quantitative relationship between the selected immittance function and the parameter of interest determining a value in the parameter of interest. A computer program and apparatus are also disclosed herein.

No. of Pages : 61 No. of Claims : 22

(12) PATENT APPLICATION PUBLICATION
(19) INDIA
(22) Date of filing of Application :09/10/2014
(21) Application No.8431/DELNP/2014 A
(43) Publication Date : 08/05/2015

(54) Title of the invention : METHOD FOR COMPENSATING CHROMATIC DISPERSION AND ASSOCIATED EQUIPMENT

(51) International classification :H04J14/02,H04B10/07,H04B10/61
(31) Priority Document No :12290124.2
(32) Priority Date :05/04/2012
(33) Name of priority country :EPO
(86) International Application No :PCT/EP2013/053306
Filing Date :20/02/2013
(87) International Publication No :WO 2013/149760
(61) Patent of Addition to Application Number :NA
Filing Date :NA
(62) Divisional to Application Number :NA
Filing Date :NA

(71)**Name of Applicant :**
1)ALCATEL LUCENT
Address of Applicant :148/152 route de la Reine F 92100 Boulogne Billancourt France
(72)**Name of Inventor :**
1)SIMONNEAU Christian
2)POINTURIER Yvan
3)VACONDIO Francesco

(57) Abstract :
The present invention refers to a method for compensating within a node of an optical network chromatic dispersion undergone by optical packets transmitted within time slots of wavelength division multiplexed channels along at least one link (4 22) of the optical network a time slot duration () corresponding to the sum of a packet duration (tp) and an inter packet gap duration (t) the said method comprising the folio wings steps: demultiplexing the wavelength division multiplexed channels into a plurality of bands (B) a band (B) comprising a predetermined number of adjacent wavelength channels () transmitting the said plurality of bands (B) via a respective plurality of delay lines (13) having predetermined delays toward a respective plurality of packet add/drop structures (11) comprising a coherent receiver (25) wherein the said predetermined number of channels of one band is determined so that a first time shift due to the effect of the chromatic dispersion along transmission through the network between two optical packets of the same time slot sent respectively in different channels of the same band remains shorter than an inter packet gap duration (t) and so that the coherent receiver (25) is capable of processing the said predetermined number of channels of one band wherein the predetermined delay of a delay line (13) associated with a band of channels corresponds to a second time shift between a channel of the said associated band and a reference channel (65) the said second time shift being due to the effects of chromatic dispersion along the last crossed link (4).

No. of Pages : 42 No. of Claims : 13

(12) PATENT APPLICATION PUBLICATION
(19) INDIA
(22) Date of filing of Application :09/10/2014
(21) Application No.8432/DELNP/2014 A
(43) Publication Date : 08/05/2015

(54) Title of the invention : IDAR ACE INVERSE DISPLACEMENT ASYMMETRIC ROTATING ALTERNATIVE CORE ENGINE

(51) International classification :F01C1/46,F01C19/04,F01C19/08
(31) Priority Document No :61/610781
(32) Priority Date :14/03/2012
(33) Name of priority country :U.S.A.
(86) International Application No :PCT/US2013/030649
Filing Date :13/03/2013
(87) International Publication No :WO 2013/138404
(61) Patent of Addition to Application Number :NA
Filing Date :NA
(62) Divisional to Application Number :NA
Filing Date :NA

(71)**Name of Applicant :**
1)LUMENIUM LLC
Address of Applicant :P.O. Box 3411 Warrenton VA 21088 U.S.A.
(72)**Name of Inventor :**
1)ANDERSON William
2)LUKACZYK Trent
3)LUKACZYK William

(57) Abstract :
The disclosure provides engines or pumps that includes a rotatable shaft defining a central axis A the shaft having a first end and a second end. The shaft can have an elongate first island disposed thereon. The first island can have a body with a volume generally defined between front and rear surfaces that are spaced apart. The front and rear surfaces can lie in a plane parallel to a radial axis R. The perimeters of the front and rear surfaces can define a curved perimeter surface therebetween. The engine or pump can further include a front side plate disposed adjacent to the front surface of the first island and a rear side plate disposed adjacent to the rear surface of the first island. The engine or pump also includes a first contour assembly disposed between the front side plate and the rear side plate.

No. of Pages : 67 No. of Claims : 10

(12) PATENT APPLICATION PUBLICATION
(21) Application No.8433/DELNP/2014 A
(19) INDIA
(22) Date of filing of Application :09/10/2014
(43) Publication Date : 08/05/2015

(54) Title of the invention : INHALER FOR POWDERED, PARTICULARLY MEDICAL SUBSTANCES

(51) International classification :A61M15/00
(31) Priority Document No :10 2004 041524.2
(32) Priority Date :27/08/2004
(33) Name of priority country :Germany
(86) International Application No :PCT/EP2005/054094
Filing Date :19/08/2005
(87) International Publication No : NA
(61) Patent of Addition to Application Number :NA
Filing Date :NA
(62) Divisional to Application Number :1160/DELNP/2007
Filed on :13/02/2007

(71)**Name of Applicant :**
1)SANOFI SA
Address of Applicant :11 RUE DE VEYROT, 1217 MEYRIN SWITZERLAND
(72)**Name of Inventor :**
1)ALFRED VON SCHUCKMANN

(57) Abstract :
Inhaler (1) for powdered substances, particularly medical substances, with a suction air channel (12) leading to a mouthpiece (3), also a storage chamber (11) for the substance (10) and a linearly moved dosing chamber (26) for apportioning a specific amount (10) of substance from the storage chamber (11) and bringing the amount (10) of substance into a transfer position, for transfer to the suction air stream (S), wherein the inhaler comprises a plunger slide (25) fashioned as a flat part, the dosing chamber being formed in the plunger slide, wherein the plunger slide interacts outside the storage chamber (11) with a closure plunger (52) that is movable in relation to the plunger slide.

No. of Pages : 27 No. of Claims : 12

(12) PATENT APPLICATION PUBLICATION
(21) Application No.8425/DELNP/2014 A
(19) INDIA
(22) Date of filing of Application :09/10/2014
(43) Publication Date : 08/05/2015

(54) Title of the invention : A METHOD OF MANUFACTURING SINGLE PIECE FUSELAGE BARRELS IN COMPOSITE MATERIAL

(51) International classification :B29C70/32,B29C70/44,B29C33/48
(31) Priority Document No :TO2012A000317
(32) Priority Date :12/04/2012
(33) Name of priority country :Italy
(86) International Application No :PCT/IB2013/052928
Filing Date :12/04/2013
(87) International Publication No :WO 2013/153537
(61) Patent of Addition to Application Number :NA
Filing Date :NA
(62) Divisional to Application Number :NA
Filing Date :NA

(71)**Name of Applicant :**
1)ALENIA AERMACCHI S.P.A.
Address of Applicant :Via Ing. Paolo Foresio 1 I 21040 VENEGONO SUPERIORE (Varese) Italy
(72)**Name of Inventor :**
1)INSERRA IMPARATO Sabato
2)CERRETA Pietrantonio

(57) Abstract :
A vacuum bag (18) is placed around the inner forming surface (IML) of an inner mandrel with radially retractable sectors (11a 11b) having parallel longitudinal slots (17). Stringers (30) of composite material are positioned in the slots (17). A respective elongated inner support (31) is placed in each stringer covered by an impermeable tubular bag (32). A skin (37) of composite material is laminated around the stringers (30) the coated supports (31 32) and the inner forming surface (IML). An outer curing tool (50 51) closes around the skin (37) defining an outer forming surface (OML) for the fuselage barrel leaving an annular gap (G) of predetermined radial width between the outer surface of the skin (37) and the outer forming surface (OML). Vacuum is applied to the volume enclosed between the vacuum bag (18) and the outer tool (50 51) so as to enlarge the diameter of the uncured barrel causing the barrel to be released from the inner mandrel (10) and bringing the outer surface of the skin (37) into contact with the inner surface (OML) of the outer tool (50 51).

No. of Pages : 24 No. of Claims : 15

(12) PATENT APPLICATION PUBLICATION
(19) INDIA
(22) Date of filing of Application :09/10/2014
(21) Application No.8427/DELNP/2014 A
(43) Publication Date : 08/05/2015

(54) Title of the invention : SORTING AGGREGATE MATERIAL

(51) International classification :B07C5/342,B07C5/36
(31) Priority Document No :1204676.9
(32) Priority Date :16/03/2012
(33) Name of priority country :U.K.
(86) International Application No :PCT/EP2013/055240
Filing Date :14/03/2013
(87) International Publication No :WO 2013/135816
(61) Patent of Addition to Application Number :NA
Filing Date :NA
(62) Divisional to Application Number :NA
Filing Date :NA

(71)**Name of Applicant :**
1)DE BEERS CENTENARY AG
Address of Applicant :Alpenstrasse 5 CH 6000 Lucerne 6 Switzerland
(72)**Name of Inventor :**
1)DAVIES Nicholas Matthew
2)HONG Qi He
3)POWELL Graham Ralph
4)POULTER Trevor
5)PORTSMOUTH Andrew

(57) Abstract :
A sorting apparatus (100) for classifying candidate rough gemstones in aggregate material the apparatus comprising: a transport system (102) for individually transporting a stone from the aggregate material to at least one measurement location; a measurement system (104) configured to determine at the at least one measurement location one or more of: whether the stone comprises diamond material whether the stone comprises boart and the shape of the stone; the apparatus further comprising a dispenser system (106) configured to dispense the stone from the transport system to one of a plurality of locations in dependence on the determination of the measuring system.

No. of Pages : 28 No. of Claims : 29

(12) PATENT APPLICATION PUBLICATION
(21) Application No.8428/DELNP/2014 A
(19) INDIA
(22) Date of filing of Application :09/10/2014
(43) Publication Date : 08/05/2015

(54) Title of the invention : HIGH SHEAR APPLICATION IN PROCESSING OILS

(51) International classification :C11B1/00,C11B3/16
(31) Priority Document No :61/621184
(32) Priority Date :06/04/2012
(33) Name of priority country :U.S.A.
(86) International Application No :PCT/US2013/029423
Filing Date :06/03/2013
(87) International Publication No :WO 2013/151652
(61) Patent of Addition to Application Number :NA
Filing Date :NA
(62) Divisional to Application Number :NA
Filing Date :NA

(71)**Name of Applicant :**
1)H R D CORPORATION
Address of Applicant :14549 Minetta Sugar Land TX 77035 U.S.A.
(72)**Name of Inventor :**
1)HASSAN Abbas
2)HASSAN Aziz
3)ANTHONY Rayford G.

(57) Abstract :
Herein disclosed is a method of processing oil comprising providing a high shear device comprising at least one rotor and at least one complementarily shaped stator configured to mix a gas with a liquid; contacting a gas with an oil in the high shear device wherein the gas is an inert gas or a reactive gas; and forming a product wherein the product is a solution a dispersion or combination thereof. Herein also disclosed is a high shear system for processing oil comprising; at least one high shear device having an inlet and at least one rotor and at least one complementarily shaped stator configured to mix a gas with a liquid; a gas source fluidly connected to the inlet; an oil source fluidly connected to the inlet; and a pump positioned upstream of a high shear device the pump in fluid connection with the inlet and the oil source.

No. of Pages : 32 No. of Claims : 15

(12) PATENT APPLICATION PUBLICATION
(19) INDIA
(22) Date of filing of Application :09/10/2014
(21) Application No.8429/DELNP/2014 A
(43) Publication Date : 08/05/2015

(54) Title of the invention : AN ELECTRODE AND USE THEREOF

(51) International classification :G01N33/543,G01N27/30
(31) Priority Document No :1207585.9
(32) Priority Date :01/05/2012
(33) Name of priority country :U.K.
(86) International Application No :PCT/GB2013/051121
Filing Date :01/05/2013
(87) International Publication No :WO 2013/164611
(61) Patent of Addition to Application Number :NA
Filing Date :NA
(62) Divisional to Application Number :NA
Filing Date :NA

(71)**Name of Applicant :**
1)ISIS INNOVATION LTD
Address of Applicant :Ewert House Ewert Place Summertown Oxford Oxfordshire OX2 7SG U.K.
2)UNIVERSIDADE ESTADUAL PAULISTA JULIO DE MESQUITA FILHO
(72)**Name of Inventor :**
1)DAVIS Jason
2)BUENO Paulo Roberto

(57) Abstract :
The application relates to an electrode for use in the electrochemical detection of a target species wherein the electrode has a planar surface disposed on which are probe molecules that are capable of binding selectively to the target species wherein the electrode prior to binding of the probe molecules with the target species has an electron transfer resistance per area of the electrode of from 10 megaohms cm to 95 megaohms cm.

No. of Pages : 39 No. of Claims : 27

(12) PATENT APPLICATION PUBLICATION
(19) INDIA
(22) Date of filing of Application :09/10/2014
(21) Application No.8441/DELNP/2014 A
(43) Publication Date : 08/05/2015

(54) Title of the invention : AN INGREDIENT CAPSULE FOR BEVERAGE PREPARATION

(51) International classification :B65D85/816,B65D85/804
(31) Priority Document No :12166967.5
(32) Priority Date :07/05/2012
(33) Name of priority country :EPO
(86) International Application No :PCT/EP2013/059069
Filing Date :01/05/2013
(87) International Publication No :WO 2013/167437
(61) Patent of Addition to Application Number :NA
Filing Date :NA
(62) Divisional to Application Number :NA
Filing Date :NA

(71)**Name of Applicant :**
1)NESTEC S.A.
Address of Applicant :Av. Nestl 55 CH 1800 Vevey Switzerland
(72)**Name of Inventor :**
1)DOGAN Nihan
2)BEZET Nicolas Jean Guy

(57) Abstract :
Capsule (9) for use in a beverage preparation machine (1) said capsule comprising side (10) bottom (12) and top (11) walls defining a closed chamber said chamber containing an ingredient to be dissolved and/or extracted by a fluid injected under pressure within said capsule said fluid being provided through an injection element (20) of the machine that is able to pierce an injection wall of thechamber said capsule further comprising a beverage dispensing wall able to open for releasing a beverage prepared from said ingredient and said fluid said capsule comprising a separating wall (14) within the chamber that separates in a leak tight manner: an ingredient containing compartment (15) and a fluid injection compartment (16) said separating wall (14) comprising a one way valve (17) able to let fluid under pressure flow only from the injection compartment (16) towards the ingredient containing compartment (15).

No. of Pages : 18 No. of Claims : 6

(12) PATENT APPLICATION PUBLICATION
(19) INDIA
(22) Date of filing of Application :09/10/2014
(21) Application No.8442/DELNP/2014 A
(43) Publication Date : 08/05/2015

(54) Title of the invention : MEDIA SYNCHRONISATION SYSTEM

(51) International classification :G10L19/018,H04N21/40,H04N21/858
(31) Priority Document No :1206564.5
(32) Priority Date :13/04/2012
(33) Name of priority country :U.K.
(86) International Application No :PCT/GB2013/050956
Filing Date :12/04/2013
(87) International Publication No :WO 2013/153405
(61) Patent of Addition to Application Number :NA
Filing Date :NA
(62) Divisional to Application Number :NA
Filing Date :NA

(71)**Name of Applicant :**
1)INTRASONICS S.A.R.L
Address of Applicant :12 14 rue Leon Thyes L 2636 Luxembourg
(72)**Name of Inventor :**
1)HAYWOOD Peter
2)REYNOLDS Michael Raymond
3)KELLY Peter John
4)CVEJIC Nedeljko
5)BARROTT David John
6)STARKIE Stephen

(57) Abstract :
A communications system is provided in which code word pairs are distributed within the audio of a television or radio programme (or the like). Each pair of code words includes an ID code word that is the same for a given programme and a synchronisation code word that is unique within the programme. A portable user device is able to synchronise itself to the programme using the embedded synchronisation code words.

No. of Pages : 27 No. of Claims : 33

(12) PATENT APPLICATION PUBLICATION
(19) INDIA
(22) Date of filing of Application :09/10/2014
(21) Application No.8443/DELNP/2014 A
(43) Publication Date : 08/05/2015

(54) Title of the invention : SUBSTITUTED XANTHINE DERIVATIVES

(51) International classification :C07D487/04,A61K31/519,A61P13/12
(31) Priority Document No :61/623858
(32) Priority Date :13/04/2012
(33) Name of priority country :U.S.A.
(86) International Application No :PCT/US2013/036454
Filing Date :12/04/2013
(87) International Publication No :WO 2013/155465
(61) Patent of Addition to Application Number :NA
Filing Date :NA
(62) Divisional to Application Number :NA
Filing Date :NA

(71)**Name of Applicant :**
1)CONCERT PHARMACEUTICALS INC.
Address of Applicant :99 Hayden Avenue Suite 500 Lexington MA 02421 U.S.A.
(72)**Name of Inventor :**
1)TUNG Roger D.
2)PANDYA Bhaumik
3)HARBESON Scott L.

(57) Abstract :
This invention relates to novel compounds that are substituted xanthine derivatives and pharmaceutically acceptable salts thereof. For example this invention relates to novel substituted xanthine derivatives that are derivatives of pentifylline. This invention also provides compositions comprising one or more compounds of this invention and a carrier and the use of the disclosed compounds and compositions in methods of treating diseases and conditions for which pentifylline and related compounds are beneficial.

No. of Pages : 54 No. of Claims : 44

(12) PATENT APPLICATION PUBLICATION
(19) INDIA
(22) Date of filing of Application :09/10/2014
(21) Application No.8444/DELNP/2014 A
(43) Publication Date : 08/05/2015

(54) Title of the invention : HYBRID AUTOMATIC REPEAT REQUEST IN COMMUNICATIONS

(51) International classification :H04L1/18
(31) Priority Document No :01/1900/01
(32) Priority Date :02/04/2012
(33) Name of priority country :
(86) International Application No :PCT/EP2012/055929
Filing Date :02/04/2012
(87) International Publication No :WO 2013/149635
(61) Patent of Addition to Application Number :NA
Filing Date :NA
(62) Divisional to Application Number :NA
Filing Date :NA

(71)**Name of Applicant :**
1)NOKIA SOLUTIONS AND NETWORKS OY
Address of Applicant :Karaportti 3 FI 02610 Espoo Finland
(72)**Name of Inventor :**
1)LAHETKANGAS Eeva
2)TIIROLA Esa Tapani
3)PAJUKOSKI Kari Pekka

(57) Abstract :
A method for hybrid automatic repeat request HARQ signalling in a communications system is disclosed. The method comprises defining in a communications apparatus a link independent HARQ entity for one link direction wherein the defined entity comprises a resource allocation for one or more of for ward link and reverse link data the resource allocation comprising at least one HARQ process having a process identification each HARQ process having a unique HARQ identification a data allocation having a predetermined timing offset with respect to the resource allocation and a HARQ acknowledgement allocation having a predetermined timing offset with respect to the data allocation wherein the timing offset of the HARQ acknowledgement with respect to the data allocation is determined in terms of time division duplexing TDD frames and independently of a forward link reverse link ratio.

No. of Pages : 41 No. of Claims : 20

(12) PATENT APPLICATION PUBLICATION
(19) INDIA
(22) Date of filing of Application :09/10/2014
(21) Application No.8445/DELNP/2014 A
(43) Publication Date : 08/05/2015

(54) Title of the invention : ENABLING CDMA2000 SYSTEM SHARING IN LTE

(51) International classification :H04W36/00
(31) Priority Document No :61/616355
(32) Priority Date :27/03/2012
(33) Name of priority country :U.S.A.
(86) International Application No :PCT/EP2013/056324
Filing Date :25/03/2013
(87) International Publication No :WO 2013/144104
(61) Patent of Addition to Application Number :NA
Filing Date :NA
(62) Divisional to Application Number :NA
Filing Date :NA

(71)**Name of Applicant :**
1)NOKIA SOLUTIONS AND NETWORKS OY
Address of Applicant :Karaportti 3 FI 02610 Espoo Finland
(72)**Name of Inventor :**
1)KHAN Javed
2)KELLEY Sean
3)SCHMIDT Christopher

(57) Abstract :
A method at a user equipment in an LTE system includes selecting one of a number of CDMA systems and signaling indication(s) of the selected CDMA system to a network element. The network element receives indication(s) of CDMA system(s) which correspond to requested action(s) by a UE. The network element routes information corresponding to the requested action(s) to the CDMA system(s). Another network element in the LTE system signals to the UE indications of a mapping of a number of CDMA systems to associated ones of LTE system(s). The other network element receives signaling from the UE including indication(s) of selected CDMA system(s) selected by the UE.

No. of Pages : 44 No. of Claims : 60

(12) PATENT APPLICATION PUBLICATION
(19) INDIA
(22) Date of filing of Application :09/10/2014
(21) Application No.8454/DELNP/2014 A
(43) Publication Date : 08/05/2015

(54) Title of the invention : PLUG IN CONNECTOR IN PARTICULAR FOR MEDIA CONDUCTING LINES

(51) International classification :F16L37/098
(31) Priority Document No :10 2012 211 035.6
(32) Priority Date :27/06/2012
(33) Name of priority country :Germany
(86) International Application No :PCT/EP2013/058863
Filing Date :29/04/2013
(87) International Publication No :WO 2014/000917
(61) Patent of Addition to Application Number :NA
Filing Date :NA
(62) Divisional to Application Number :NA
Filing Date :NA

(71)**Name of Applicant :**
1)ROBERT BOSCH GMBH
Address of Applicant :Postfach 30 02 20 70442 Stuttgart Germany
(72)**Name of Inventor :**
1)ERHARDT Uwe
2)BOTSCHKA Michael

(57) Abstract :
The invention relates to a plug in connector (19) in particular for media conducting lines for fixation in a mating plug in particular in an injection body of a fuel injector comprising a plug body (11) which has at least one latching element and a securing body (12) which is displaceably accommodated on the plug body (11) and which is used to secure the at least one latching element (17) in a locked position in the mating plug (13). At least one blocking element (18) is arranged on the plug body (11) is coupled to the at least one latching element (17) and blocks the securing body (12) in the unlocked position thereof relative to a relative movement in locking direction relative to the plug body (11) until the at least one latching element (17) reaches a latching contour (32) disposed in the mating plug (13) when the plug body (11) is inserted into the mating plug (13) the at least one blocking element (18) releasing the securing body (12) in locking direction in reaction to the latching element (17) latching into the latching contour (32).

No. of Pages : 22 No. of Claims : 13

(12) PATENT APPLICATION PUBLICATION
(19) INDIA
(22) Date of filing of Application :10/10/2014
(21) Application No.8456/DELNP/2014 A
(43) Publication Date : 08/05/2015

(54) Title of the invention : WIDE TEMPERATURE RANGE CEMENT RETARDER

(51) International classification :C04B28/02,C09K8/467
(31) Priority Document No :13/458718
(32) Priority Date :27/04/2012
(33) Name of priority country :U.S.A.
(86) International Application No :PCT/US2013/036174
Filing Date :11/04/2013
(87) International Publication No :WO 2013/162904
(61) Patent of Addition to Application Number :NA
Filing Date :NA
(62) Divisional to Application Number :NA
Filing Date :NA

(71)**Name of Applicant :**
1)HALLIBURTON ENERGY SERVICES INC.
Address of Applicant :10200 Bellaire Blvd. Houston Texas 77072 U.S.A.
(72)**Name of Inventor :**
1)GOSAVI Tushar
2)MUTHUSAMY Ramesh
3)PATIL Rahul Chandrakant
4)PATIL Sandip Prabhakar

(57) Abstract :
According to an embodiment a composition is provided that can be used in a cementing. The composition includes at least: (i) a hydraulic cement; and (ii) a copolymer comprising at least the monomeric units (a) through (d) of formula (A); (a) A = H B = H CH (or) A = COOH B = H CH (b) D = NH C(CH) CH SOM Where M = Na K (c) E = H CH F = (CH) OH CH CH(CH) OH wherein the monomeric units (a) through (d) can be any sequence and any proportion in the copolymer. With water the composition of the hydraulic cement and such a copolymer becomes a cement composition. According to the method the cement composition is introduced into a well and allowed to set in the well.

No. of Pages : 28 No. of Claims : 23

(12) PATENT APPLICATION PUBLICATION
(19) INDIA
(22) Date of filing of Application :10/10/2014
(21) Application No.8457/DELNP/2014 A
(43) Publication Date : 08/05/2015

(54) Title of the invention : NONWOVEN FABRIC AND PRODUCTION METHOD FOR NONWOVEN FABRIC

(51) International classification	:D04H1/495,D04H1/492,D21H27/00
(31) Priority Document No	:2012079877
(32) Priority Date	:30/03/2012
(33) Name of priority country	:Japan
(86) International Application No	:PCT/JP2013/058631
Filing Date	:25/03/2013
(87) International Publication No	:WO 2013/146702
(61) Patent of Addition to Application Number	:NA
Filing Date	:NA
(62) Divisional to Application Number	:NA
Filing Date	:NA

(71)**Name of Applicant :**
1)UNICHARM CORPORATION
Address of Applicant :182 Shimobun Kinsei cho Shikokuchuo shi Ehime 7990111 Japan
(72)**Name of Inventor :**
1)KONISHI Takayoshi
2)HIRAOKA Toshio

(57) Abstract :
Provided are a nonwoven fabric that contains thermally expandable particles and has high bulk and high strength and a production method for said nonwoven fabric. The production method for nonwoven fabric of the present invention comprises: a step (12) in which a first raw paper material containing fibers and water is supplied on a belt and formed on the belt into a first paper layer; steps (13 14) in which a stream of high pressure water is sprayed on the first paper layer in order to form groove sections on the surface of the paper layer that extends in the machine direction; steps (16 17) in which a second raw paper material containing fibers thermally expandable particles and water is made into a sheet in order to form a second paper layer; steps (15 17) in which a third paper layer is formed by stacking the first paper layer and the second paper layer; a step (19) in which the third paper layer is dried; and steps (20 21) in which high pressure steam is sprayed on the third paper layer in order to cause the thermally expandable particles to expand. The nonwoven fabric of the present invention has a plurality of groove sections that extend in the longitudinal direction and that are lined up in the lateral direction and is provided on one surface thereof with a first layer comprising fibers and on the other surface thereof with a second layer comprising fibers and thermally expandable particles that have expanded.

No. of Pages : 47 No. of Claims : 12

(12) PATENT APPLICATION PUBLICATION
(21) Application No.8446/DELNP/2014 A
(19) INDIA
(22) Date of filing of Application :09/10/2014
(43) Publication Date : 08/05/2015

(54) Title of the invention : IMAGE PROCESSING DEVICE PROJECTOR AND METHOD OF CONTROLLING PROJECTOR

(51) International classification :H04N9/31
(31) Priority Document No :2012063283
(32) Priority Date :21/03/2012
(33) Name of priority country :Japan
(86) International Application No :PCT/JP2013/001881
Filing Date :19/03/2013
(87) International Publication No :WO 2013/140795
(61) Patent of Addition to Application Number :NA
Filing Date :NA
(62) Divisional to Application Number :NA
Filing Date :NA

(71)**Name of Applicant :**
1)SEIKO EPSON CORPORATION
Address of Applicant :4 1 Nishi shinjuku 2 chome Shinjuku ku Tokyo 1630811 Japan
(72)**Name of Inventor :**
1)NAKASHIN Yoshitaka

(57) Abstract :
A detection image generation section generates a detection image which is an image for detection a state of a projection image and includes a plurality of detection image parts and background images covering respective peripheries of the detection image parts. Each of the detection image parts includes a plurality of regions with respective luminance values different from each other and the background images have luminance values lower than the luminance values of the detection image parts. The detection image generation section changes at least one of a luminance distribution of each of the detection image parts of the detection image to be generated and a size of each of the background images so that a luminance distribution of each of the detection image parts of the taken detection image obtained by imaging is approximated to a luminance distribution of corresponding one of the detection image parts of the detection image.

No. of Pages : 93 No. of Claims : 8

(12) PATENT APPLICATION PUBLICATION
(21) Application No.8447/DELNP/2014 A
(19) INDIA
(22) Date of filing of Application :09/10/2014
(43) Publication Date : 08/05/2015

(54) Title of the invention : IMAGE PROCESSING DEVICE PROJECTOR AND METHOD OF CONTROLLING PROJECTOR

(51) International classification :H04N9/31
(31) Priority Document No :2012063282
(32) Priority Date :21/03/2012
(33) Name of priority country :Japan
(86) International Application No :PCT/JP2013/001880
Filing Date :19/03/2013
(87) International Publication No :WO 2013/140794
(61) Patent of Addition to Application Number :NA
Filing Date :NA
(62) Divisional to Application Number :NA
Filing Date :NA

(71)**Name of Applicant :**
1)SEIKO EPSON CORPORATION
Address of Applicant :4 1 Nishi shinjuku 2 chome Shinjuku ku Tokyo 1630811 Japan
(72)**Name of Inventor :**
1)NAKASHIN Yoshitaka

(57) Abstract :
An image processing device used for a projector displays an image by projecting the image on a projection surface. A detection image generation section adapted to generate a detection image which is an image adapted to detect a state of a projection image displayed on the projection surface and includes a plurality of detection image parts is provided. Each of the detection image parts includes a plurality of regions having respective luminance values different from each other. The detection image generation section changes the luminance distribution of each of the detection image parts of the detection image to be generated so that the maximum luminance values of the detection image parts included in the taken detection image obtained by taking the detection image projected on the projection surface fall within an allowable range.

No. of Pages : 87 No. of Claims : 8

(12) PATENT APPLICATION PUBLICATION
(19) INDIA
(22) Date of filing of Application :09/10/2014
(21) Application No.8448/DELNP/2014 A
(43) Publication Date : 08/05/2015

(54) Title of the invention : NETWORK SHARING AND REVERSE SINGLE RADIO VOICE CALL CONTINUITY

(51) International classification :H04W36/00
(31) Priority Document No :PCT/US2012/033003
(32) Priority Date :11/04/2012
(33) Name of priority country :
(86) International Application No :PCT/US2012/033003
Filing Date :11/04/2012
(87) International Publication No :WO 2013/154547
(61) Patent of Addition to Application Number :NA
Filing Date :NA
(62) Divisional to Application Number :NA
Filing Date :NA

(71)**Name of Applicant :**
1)NOKIA SIEMENS NETWORKS OY
Address of Applicant :Karaportti 3 FI 02610 Espoo Finland
(72)**Name of Inventor :**
1)WONG Curt
2)LAHTINEN Lauri Kalevi

(57) Abstract :
Certain networks can operate using circuit switched infrastructure while other networks may operate using infrastructure for the long term evolution (LTE) of the third generation partnership project (3GPP). Devices can operate across the boundaries of these networks. Thus such devices as well as the networks may benefit from network sharing in reverse single radio voice call continuity. For example a method may include requesting handover of a user equipment from a source network to a target network. The method may also include providing a network identification corresponding to the source network while requesting the handover. Alternatively or in addition a method may include requesting handover of a user equipment from a source network to a target network. The method may also include determining the target network based on a network identification received previously.

No. of Pages : 43 No. of Claims : 68

(12) PATENT APPLICATION PUBLICATION
(19) INDIA
(22) Date of filing of Application :09/10/2014
(21) Application No.8449/DELNP/2014 A
(43) Publication Date : 08/05/2015

(54) Title of the invention : OMEGA 3 FATTY ACID ESTER COMPOSITIONS

(51) International classification :A61K31/05,A61K31/232,A61K31/7024
(31) Priority Document No :61/618161
(32) Priority Date :30/03/2012
(33) Name of priority country :U.S.A.
(86) International Application No :PCT/US2013/030211
Filing Date :11/03/2013
(87) International Publication No :WO 2013/148136
(61) Patent of Addition to Application Number :NA
Filing Date :NA
(62) Divisional to Application Number :NA
Filing Date :NA

(71)**Name of Applicant :**
1)SANCILIO & COMPANY INC.
Address of Applicant :3874 Fiscal Court Ste 200 Riviera Beach Florida 33404 1785 U.S.A.
(72)**Name of Inventor :**
1)SANCILIO Frederick
2)PERSICANER Peter
3)CACACE Janice
4)DAHIM Mohand

(57) Abstract :
Described herein are compositions comprising at least one Omega 3 fatty acid ester and at least one surface active agent; wherein the compositions form micelles when in contact with an aqueous medium. Also provided is a method of administering to a subject a composition comprising at least one Omega 3 fatty acid ester and at least one surface active agent wherein the at least one Omega 3 fatty acid ester forms micelles when in contact with an aqueous medium and the bioavailability of the at least one Omega 3 fatty acid ester is substantially independent of a food effect. Said compositions are useful for treating cardiovascular conditions or disorders in a subject and for reducing side effects associated with the ingestion of Omega 3 fatty acid esters. Described are also various dosage forms for administering said compositions and use of said compositions in functional foods. Provided herein are also kits with instructions on how to administer said compositions.

No. of Pages : 65 No. of Claims : 121

(12) PATENT APPLICATION PUBLICATION
(19) INDIA
(22) Date of filing of Application :16/04/2014
(21) Application No.3046/DELNP/2014 A
(43) Publication Date : 08/05/2015

(54) Title of the invention : PROCESS FOR MAKING ARTIFICIAL TURF FIBERS

(51) International classification :D01D5/08,A63C19/04,D05C15/04
(31) Priority Document No :61/549443
(32) Priority Date :20/10/2011
(33) Name of priority country :U.S.A.
(86) International Application No :PCT/IB2012/002603
Filing Date :18/10/2012
(87) International Publication No :WO 2013/057583
(61) Patent of Addition to Application Number :NA
Filing Date :NA
(62) Divisional to Application Number :NA
Filing Date :NA

(71)**Name of Applicant :**
1)TARKETT INC.
Address of Applicant :1001 Yamaska Est Farnham J2N 1J7 Canada
(72)**Name of Inventor :**
1)MORTON FINGER J¼rgen

(57) Abstract :
A method of making a fiber for use in association with an artificial turf system as well as an artificial turf system having such a fiber. The fiber is made by extruding a fiber fibrillating the fiber and storing the fiber wherein the fiber is not cut longitudinally between the step of extruding the fiber and storing the fiber. After being extruded the fiber may be folded and wrapped with a wrapping yarn.

No. of Pages : 16 No. of Claims : 16

(12) PATENT APPLICATION PUBLICATION
(19) INDIA
(22) Date of filing of Application :07/10/2014
(21) Application No.8332/DELNP/2014 A
(43) Publication Date : 08/05/2015

(54) Title of the invention : TIRE INFLATION SYSTEM

(51) International classification :B60C23/12
(31) Priority Document No :61/613406
(32) Priority Date :20/03/2012
(33) Name of priority country :U.S.A.
(86) International Application No :PCT/US2013/030604
Filing Date :12/03/2013
(87) International Publication No :WO 2013/142158
(61) Patent of Addition to Application Number :NA
Filing Date :NA
(62) Divisional to Application Number :NA
Filing Date :NA

(71)**Name of Applicant :**
1)APERIA TECHNOLOGIES
Address of Applicant :160 Linden Ave. Suite 130 South San Francisco CA 94080 U.S.A.
(72)**Name of Inventor :**
1)RICHARDSON Brandon
2)CARLBERG Dave
3)SHELANDER Ace

(57) Abstract :
A tire inflation system including a drive mechanism having a rotational axis a pump cavity positioned a radial distance away from the axis of rotation and a force translator coupling the rotational axis to the pump cavity. The drive mechanism includes a cam comprising an arcuate bearing surface having a non uniform curvature the cam rotatable about the rotational axis and an eccentric mass couple to the cam that offsets a center of mass of the drive mechanism from the rotational axis. The pump cavity is rotatably coupled to the cam wherein the pump cavity includes an actuating element and a chamber. The force translator couples the arcuate bearing surface to the actuating element wherein the force translator includes an axis having an arcuate position fixed to an arcuate position of the pump cavity.

No. of Pages : 59 No. of Claims : 31

(12) PATENT APPLICATION PUBLICATION
(19) INDIA
(22) Date of filing of Application :10/10/2014
(21) Application No.8460/DELNP/2014 A
(43) Publication Date : 08/05/2015

(54) Title of the invention : METHOD FOR PREPARING GLYCEROL ETHER AND GLYCOL ETHER

(51) International classification :C07C41/16,C07C43/13
(31) Priority Document No :1252624
(32) Priority Date :23/03/2012
(33) Name of priority country :France
(86) International Application No :PCT/EP2013/056280
Filing Date :25/03/2013
(87) International Publication No :WO 2013/139995
(61) Patent of Addition to Application Number :NA
Filing Date :NA
(62) Divisional to Application Number :NA
Filing Date :NA

(71)**Name of Applicant :**
1)RHODIA OPERATIONS
Address of Applicant :25 rue de Clichy F 75009 Paris France
2)CENTRE NATIONAL DE LA RECHERCHE SCIENTIFIQUE (C.N.R.S)
3)UNIVERSIT‰ CLAUDE BERNARD LYON 1
4)FONDS DE DEVELOPPEMENT DES FILIERES DES OLEAGINEUX ET PROTEAGINEUX FIDOP
(72)**Name of Inventor :**
1)MIGNANI Grard
2)LEMAIRE Marc
3)DA SILVA Eric
4)DAYOUB Wissam
5)RAOUL Yann

(57) Abstract :
The present invention concerns a method for preparing glycerol ether or glycol ether comprising the reaction of a compound of formula (II) with a compound of formula (III) in the presence of a heterogeneous acid catalyst of formulas (II) and (III).

No. of Pages : 25 No. of Claims : 18

(12) PATENT APPLICATION PUBLICATION
(19) INDIA
(22) Date of filing of Application :10/10/2014
(21) Application No.8461/DELNP/2014 A
(43) Publication Date : 08/05/2015

(54) Title of the invention : FLOW STOP INSERT APPARATUS AND METHODS

(51) International classification :A61M5/142,F04C5/00
(31) Priority Document No :13/443390
(32) Priority Date :10/04/2012
(33) Name of priority country :U.S.A.
(86) International Application No :PCT/US2013/035393
Filing Date :05/04/2013
(87) International Publication No :WO 2013/154929
(61) Patent of Addition to Application Number :NA
Filing Date :NA
(62) Divisional to Application Number :NA
Filing Date :NA

(71)**Name of Applicant :**
1)SMITHS MEDICAL ASD INC.
Address of Applicant :160 Weymouth Street Rockland MA 02370 U.S.A.
(72)**Name of Inventor :**
1)ROBERT Renee
2)COTE Steve
3)TAYLOR Jeff

(57) Abstract :
An embodiment is directed to pressure plate for attachment to an infusion pump where the pressure plate includes a tubing support surface at least partially surrounded by a raised perimeter support. The pressure plate includes a plurality of guide structures extending from the raised perimeter support that define a passageway for an infusion pump tube. Additionally an attachable flow stop assembly is included that includes an attachable occlusion arch and an attachable flow stop arm. The attachable occlusion arch includes a plurality of tab structures that couple to the raised perimeter support. The occlusion arch further includes an aperture configured to surround an infusion pump tube threaded therethrough. The attachable flow stop arm is operatively coupled to the raised perimeter support adjacent the attachable occlusion arch in a spring biased fashion such that the aperture in the occlusion arch may be selectively occluded by the flow stop arm.

No. of Pages : 22 No. of Claims : 19

(12) PATENT APPLICATION PUBLICATION
(21) Application No.8462/DELNP/2014 A
(19) INDIA
(22) Date of filing of Application :10/10/2014
(43) Publication Date : 08/05/2015

(54) Title of the invention : METHOD OF INCREASING THE PERMEABILITY OF A SUBTERRANEAN FORMATION BY CREATING A MULTIPLE FRACTURE NETWORK

(51) International classification :E21B43/26,E21B43/16
(31) Priority Document No :61/623515
(32) Priority Date :12/04/2012
(33) Name of priority country :U.S.A.
(86) International Application No :PCT/US2013/036176
Filing Date :11/04/2013
(87) International Publication No :WO 2013/155307
(61) Patent of Addition to Application Number :NA
Filing Date :NA
(62) Divisional to Application Number :NA
Filing Date :NA

(71)**Name of Applicant :**
1)BAKER HUGHES INCORPORATED
Address of Applicant :2929 Allen Parkway Suite 2100 Houston TX 77019 U.S.A.
(72)**Name of Inventor :**
1)CREWS James
2)HUANG Tianping

(57) Abstract :
The stimulated rock volume (SRV) of a subterranean formation may be increased by pumping viscous fracturing fluid into the formation in a first stage to create or enlarge a primary fracture decreasing the pumping in order for the fluid to increase in viscosity within the primary fracture and then continuing to pump viscous fluid into the formation in a second stage. The fluid pumped into the second stage is diverted away from the primary fracture and a secondary fracture is created. The directional orientation of the secondary fracture is distinct from the directional orientation of the primary fracture. The fluid of the first stage may contain a viscosifying polymer or viscoelastic surfactant or may be slickwater.

No. of Pages : 38 No. of Claims : 35

(12) PATENT APPLICATION PUBLICATION
(21) Application No.8335/DELNP/2014 A
(19) INDIA
(22) Date of filing of Application :07/10/2014
(43) Publication Date : 08/05/2015

(54) Title of the invention : AN IMPROVED DC ELECTRIC MOTOR/GENERATOR WITH ENHANCED PERMANENT MAGNET FLUX DENSITIES

(51) International classification :H02K31/02
(31) Priority Document No :61/613022
(32) Priority Date :20/03/2012
(33) Name of priority country :U.S.A.
(86) International Application No :PCT/US2013/033198
Filing Date :20/03/2013
(87) International Publication No :WO 2013/142629
(61) Patent of Addition to Application Number :NA
Filing Date :NA
(62) Divisional to Application Number :NA
Filing Date :NA

(71)**Name of Applicant :**
1)LINEAR LABS INC.
Address of Applicant :5603 Weatherford Highway Granbury Texas 76049 U.S.A.
(72)**Name of Inventor :**
1)HUNSTABLE Fred E.

(57) Abstract :
This disclosure relates in general to a new and improved electric motor/generator and in particular to an improved system and method for producing rotary motion from a electro magnetic motor or generating electrical power from a rotary motion input by concentrating magnetic forces due to electromagnetism or geometric configurations.

No. of Pages : 62 No. of Claims : 31

(12) PATENT APPLICATION PUBLICATION
(19) INDIA
(22) Date of filing of Application :07/10/2014
(21) Application No.8336/DELNP/2014 A
(43) Publication Date : 08/05/2015

(54) Title of the invention : METHOD AND SYSTEM FOR ITEM AUTHENTICATION AND CUSTOMIZATION

(51) International classification :G01V15/00,G06K7/10
(31) Priority Document No :61/609163
(32) Priority Date :09/03/2012
(33) Name of priority country :U.S.A.
(86) International Application No :PCT/US2013/029904
Filing Date :08/03/2013
(87) International Publication No :WO 2013/134654
(61) Patent of Addition to Application Number :NA
Filing Date :NA
(62) Divisional to Application Number :NA
Filing Date :NA

(71)**Name of Applicant :**
1)UNITED STATES POSTAL SERVICE
Address of Applicant :475 Lenfant Plaza #6443 Washington DC 20260 1135 U.S.A.
(72)**Name of Inventor :**
1)HUSSAIN Khalid
2)DOMINGUEZ Marie Therese
3)FAILOR David E.
4)ACKERMAN William G.

(57) Abstract :
A method of illumating an item is disclosed. The method includes applying adhesive to the item interspersing a taggant in the adhesive illuminating the item with an excitation signal sensing luminescence emitted by the taggant in response to illumination by the excitation signal and determining the authenticity of the item based on the sensed emitted luminescence. The item can include any item benefited by authentication and can include a postage stamp. A method of customizing an item is disclosed. This can include the steps of preparing a substrate applying a security feature to the substrate printing non customized information on the substrate receiving image information and printing the image information on the substrate.

No. of Pages : 55 No. of Claims : 48

(12) PATENT APPLICATION PUBLICATION
(19) INDIA
(22) Date of filing of Application :10/10/2014
(21) Application No.8467/DELNP/2014 A
(43) Publication Date : 08/05/2015

(54) Title of the invention : INTAGLIO PRINTING PRESS

(51) International classification	:B41F13/00,B41F13/008,B41F9/00
(31) Priority Document No	:12165388.5
(32) Priority Date	:24/04/2012
(33) Name of priority country	:EPO
(86) International Application No	:PCT/IB2013/053247
Filing Date	:24/04/2013
(87) International Publication No	:WO 2013/160853
(61) Patent of Addition to Application Number	:NA
Filing Date	:NA
(62) Divisional to Application Number	:NA
Filing Date	:NA

(71)**Name of Applicant :**
1)KBA NOTASYS SA
Address of Applicant :PO Box 347 55 Avenue du Grey CH 1000 Lausanne 22 Switzerland
(72)**Name of Inventor :**
1)KERSTEN Thomas
2)SCHAEDE Johannes Georg
3)WRSCH Alain
4)SCHWITZKY Volkmar Rolf
5)SCHARKUS Volker

(57) Abstract :
There is described an intaglio printing press (1; 1) comprising a plate cylinder (8) carrying one or more intaglio printing plates the plate cylinder (8) receiving ink from an inking system (9 20 23; 20 23) having a plurality of chablon cylinders (23; 23) transferring ink directly or indirectly onto the plate cylinder (8) the intaglio printing press (1; 1) comprising an adjustment system acting on the chablon cylinders (23; 23) in order to compensate elongation of the one or more intaglio printing plates. The adjustment system comprises for each chablon cylinder (23; 23) an adjustable drive unit which adjustable drive unit (25) is interposed between the chablon cylinder (23; 23) acting as a rotating output body of the adjustable drive unit (25) and a driving gear (100) acting as a rotating input body of the adjustable drive unit (25). The adjustable drive unit (25) is designed to allow selected adjustment of a rotational speed of the chablon cylinder (23; 23) with respect to a rotational speed of the driving gear (100). In an adjusting state of the adjustable drive unit (25) driving into rotation of the chablon cylinder (23; 23) is adjusted over each revolution of the chablon cylinder (23; 23) by means of an adjustment motor (300) of the adjustable drive unit (25). In a non adjusting state of the adjustable drive unit (25) the adjustment motor (300) is inoperative and driving into rotation of the chablon cylinder (23; 23) is performed exclusively mechanically via the adjustable drive unit (25) the chablon cylinder (23; 23) rotating at a same rotational speed as the driving gear (100).

No. of Pages : 35 No. of Claims : 14

(12) PATENT APPLICATION PUBLICATION
(19) INDIA
(22) Date of filing of Application :10/10/2014
(21) Application No.8470/DELNP/2014 A
(43) Publication Date : 08/05/2015

(54) Title of the invention : INFORMATION PROCESSING DEVICE INFORMATION PROCESSING METHOD AND PROGRAM

(51) International classification :G06F3/0482,G06F3/0481,G06F3/0488
(31) Priority Document No :2012096456
(32) Priority Date :20/04/2012
(33) Name of priority country :Japan
(86) International Application No :PCT/JP2013/056804
Filing Date :12/03/2013
(87) International Publication No :WO 2013/157330
(61) Patent of Addition to Application Number :NA
Filing Date :NA
(62) Divisional to Application Number :NA
Filing Date :NA

(71)**Name of Applicant :**
1)SONY CORPORATION
Address of Applicant :1 7 1 Konan Minato ku Tokyo 1080075 Japan
(72)**Name of Inventor :**
1)SUZUKI Toshikazu

(57) Abstract :
To provide an information processing device information processing method and program capable of improving operability for a user. [Solution] This information processing device has a detection unit which detects a position of a specified first point and a control unit which displays an icon at a position specified by instruction of a direction from the first point.

No. of Pages : 57 No. of Claims : 20

(12) PATENT APPLICATION PUBLICATION
(19) INDIA
(22) Date of filing of Application :07/10/2014
(21) Application No.8349/DELNP/2014 A
(43) Publication Date : 08/05/2015

(54) Title of the invention : ALERT VOLUME NORMALIZATION IN A VIDEO SURVEILLANCE SYSTEM

(51) International classification :G06T7/00,H04N7/18
(31) Priority Document No :61/611284
(32) Priority Date :15/03/2012
(33) Name of priority country :U.S.A.
(86) International Application No :PCT/US2013/031977
Filing Date :15/03/2013
(87) International Publication No :WO 2013/138700
(61) Patent of Addition to Application Number :NA
Filing Date :NA
(62) Divisional to Application Number :NA
Filing Date :NA

(71)**Name of Applicant :**
1)BEHAVIORAL RECOGNITION SYSTEMS INC.
Address of Applicant :2100 West Loop South Houston Texas 77027 U.S.A.
(72)**Name of Inventor :**
1)SAITWAL Kishor Adinath
2)COBB Wesley Kenneth

(57) Abstract :
Techniques are disclosed for normalizing and publishing alerts using a behavioral recognition based video surveillance system configured with an alert normalization module. Certain embodiments allow a user of the behavioral recognition system to provide the normalization module with a set of relative weights for alert types and a maximum publication value. Using these values the normalization module evaluates an alert and determines whether its rareness value exceed a threshold. Upon determining that the alert exceeds the threshold the module normalizes and publishes the alert.

No. of Pages : 34 No. of Claims : 14

(12) PATENT APPLICATION PUBLICATION
(19) INDIA
(22) Date of filing of Application :10/10/2014
(21) Application No.8473/DELNP/2014 A
(43) Publication Date : 08/05/2015

(54) Title of the invention : PLASTIC WORKING METHOD AND PLASTIC WORKING DEVICE FOR METAL MATERIAL

(51) International classification :B21D22/20
(31) Priority Document No :NA
(32) Priority Date :NA
(33) Name of priority country :NA
(86) International Application No :PCT/JP2012/062691
Filing Date :17/05/2012
(87) International Publication No :WO 2013/171884
(61) Patent of Addition to Application Number :NA
Filing Date :NA
(62) Divisional to Application Number :NA
Filing Date :NA

(71)**Name of Applicant :**
1)NIPPON STEEL & SUMITOMO METAL CORPORATION
Address of Applicant :6 1 Marunouchi 2 chome Chiyoda ku Tokyo 1008071 Japan
(72)**Name of Inventor :**
1)SATO Koichi
2)KUBO Masahiro
3)MIZUMURA Masaaki
4)YOSHIDA Tohru

(57) Abstract :
The present invention is a plastic working method for austenite containing steel material wherein: a site at which fracture during plastic deformation of the steel material is predicted is specified; the strain ratio x of said predicted fracture site is analyzed; the steel material is heated so that the local temperature T satisfies Formula (1); and the post heating steel material is plastically deformed. T is the maximum strain induced transformation ductility temperature with respect to the strain ratio x in °C units sL is the standard deviation of the strain ratio x dependent equivalent critical strain approximation curve that is on the low temperature side of T sH is the standard deviation of the strain ratio x dependent equivalent critical strain approximation curve that is on the high temperature side of T and T is the local temperature at the predicted fracture site in °C units. T 2—sL = T = T+1.25—sH (Formula 1)

No. of Pages : 51 No. of Claims : 11

(12) PATENT APPLICATION PUBLICATION
(21) Application No.8474/DELNP/2014 A
(19) INDIA
(22) Date of filing of Application :10/10/2014
(43) Publication Date : 08/05/2015

(54) Title of the invention : MODULAR FILLING APPARATUS AND METHOD

(51) International classification :B65B55/02,A61L2/00
(31) Priority Document No :61/686867
(32) Priority Date :13/04/2012
(33) Name of priority country :U.S.A.
(86) International Application No :PCT/US2013/036296
Filing Date :12/04/2013
(87) International Publication No :WO 2013/155369
(61) Patent of Addition to Application Number :NA
Filing Date :NA
(62) Divisional to Application Number :NA
Filing Date :NA

(71)**Name of Applicant :**
1)DR. PY INSTITUTE LLC
Address of Applicant :201 Housatonic Avenue New Milford CT 06776 U.S.A.
(72)**Name of Inventor :**
1)PY Daniel

(57) Abstract :
An apparatus and method for sterile filling comprises de contaminating a needle penetrable surface of a device including a needle penetrable septum and a sealed chamber in fluid communication with the needle penetrable septum. A filling needle penetrates the needle penetrable septum introduces substance through the filling needle and into the chamber and is in turn withdrawn from the septum. A liquid sealant is applied to the penetrated region of the septum. Radiation or energy is applied to the liquid sealant to cure the liquid sealant from a liquid phase to a solid phase.

No. of Pages : 66 No. of Claims : 68

(12) PATENT APPLICATION PUBLICATION
(21) Application No.8476/DELNP/2014 A
(19) INDIA
(22) Date of filing of Application :10/10/2014
(43) Publication Date : 08/05/2015

(54) Title of the invention : ADAPTIVE CONTROL OF HYBRID ULTRACAPACITOR BATTERY STORAGE SYSTEM FOR PHOTOVOLTAIC OUTPUT SMOOTHING

(51) International classification :H02S40/38,G05F1/575
(31) Priority Document No :61/756296
(32) Priority Date :24/01/2013
(33) Name of priority country :U.S.A.
(86) International Application No :PCT/US2014/012870
Filing Date :24/01/2014
(87) International Publication No :WO 2014/116899
(61) Patent of Addition to Application Number :NA
Filing Date :NA
(62) Divisional to Application Number :NA
Filing Date :NA

(71)**Name of Applicant :**
1)NEC LABORATORIES AMERICA INC.
Address of Applicant :4 Independence Way Suite 200 Princeton New Jersey 08540 U.S.A.
(72)**Name of Inventor :**
1)YE Yanzhu
2)SHARMA Ratnesh
3)SHI Di

(57) Abstract :
A hybrid ultracapacitor battery energy storage system is integrated with a photovoltaic sytem to help solve fluctuations. A fuzzy logic based adaptive power management system enables optimization of the power/energy distributions and a filter based power coordination layer serving as a rudimentary step for power coordination among the hybrid storage system and a fuzzy logic based control adjustment layer that keeps monitoring the operation status of all the energy storage devices taking into account their dynamic characteristics and fine tuning the control settings adaptively.

No. of Pages : 22 No. of Claims : 19

(12) PATENT APPLICATION PUBLICATION
(19) INDIA
(22) Date of filing of Application :10/10/2014
(21) Application No.8477/DELNP/2014 A
(43) Publication Date : 08/05/2015

(54) Title of the invention : METHODS OF TREATING CANCER USING AURORA KINASE INHIBITORS

(51) International classification :A61K31/337,A61K31/551,A61K35/00
(31) Priority Document No :61/613258
(32) Priority Date :20/03/2012
(33) Name of priority country :U.S.A.
(86) International Application No :PCT/US2013/032962
Filing Date :19/03/2013
(87) International Publication No :WO 2013/142491
(61) Patent of Addition to Application Number :NA
Filing Date :NA
(62) Divisional to Application Number :NA
Filing Date :NA

(71)**Name of Applicant :**
1)MILLENNIUM PHARMACEUTICALS INC.
Address of Applicant :40 Landsdowne Street Cambridge MA 02139 U.S.A.
(72)**Name of Inventor :**
1)CHAKRAVARTY Arijit
2)ECSEDY Jeffrey A.
3)KLEINFIELD Robert W.
4)LE Kha N.
5)SHYU Wen Chyi
6)VENKATAKRISHNAN Karthik

(57) Abstract :
Disclosed are methods for the treatment of various cell proliferative disorders. Disclosed in particular are methods for treatment of various cell proliferative disorders by administering a selective inhibitor of Aurora A kinase in combination with taxane based chemotherapy such as paclitaxel or docetaxel.

No. of Pages : 49 No. of Claims : 29

(12) PATENT APPLICATION PUBLICATION
(19) INDIA
(22) Date of filing of Application :08/10/2014
(21) Application No.8352/DELNP/2014 A
(43) Publication Date : 08/05/2015

(54) Title of the invention : SYSTEMS AND METHODS FOR PROTECTING A TURBOCHARGER ALUMINUM BEARING HOUSING

(51) International classification :F04D29/04,F04D29/28,F04D29/00
(31) Priority Document No :61/616012
(32) Priority Date :27/03/2012
(33) Name of priority country :U.S.A.
(86) International Application No :PCT/US2013/032932
Filing Date :19/03/2013
(87) International Publication No :WO 2013/148412
(61) Patent of Addition to Application Number :NA
Filing Date :NA
(62) Divisional to Application Number :NA
Filing Date :NA

(71)**Name of Applicant :**
1)BORGWARNER INC.
Address of Applicant :Patent Department 3850 Hamlin Road Auburn Hills Michigan 48326 U.S.A.
(72)**Name of Inventor :**
1)FRASER Brock
2)SONIGRA Mehul

(57) Abstract :
In an aluminum turbocharger bearing housing there is a potential for wear of the bearing housing at the interface with the turbine housing and/or the bearing system. One area of potential concern is the interface between the flange of the bearing housing and an abutment of the turbine housing. With a protective element at the interface the potential for wear and thus misalignment of the rotating assembly with the housings in which they operate can be mitigated. The protective element can be a cap for the bearing housing flange or a heat shield adapted to cover certain faces of the bearing housing flange. The protective element can be a sleeve provided within a bore in the bearing housing. The protective element can be made of a material with a higher heat resistance and/or a higher wear resistance than the aluminum bearing housing.

No. of Pages : 21 No. of Claims : 16

(12) PATENT APPLICATION PUBLICATION
(21) Application No.8353/DELNP/2014 A
(19) INDIA
(22) Date of filing of Application :08/10/2014
(43) Publication Date : 08/05/2015

(54) Title of the invention : METHOD FOR PRODUCING TRIMETHYLSULFOXONIUM BROMIDE AND TEMPERATURE CONTROL METHOD FOR REACTION SYSTEM PRODUCING TRIMETHYLSULFOXONIUM BROMIDE

(51) International classification :C07C381/00
(31) Priority Document No :2012099132
(32) Priority Date :24/04/2012
(33) Name of priority country :Japan
(86) International Application No :PCT/JP2013/056106
Filing Date :06/03/2013
(87) International Publication No :WO 2013/161394
(61) Patent of Addition to Application Number :NA
Filing Date :NA
(62) Divisional to Application Number :NA
Filing Date :NA

(71)**Name of Applicant :**
1)KUREHA CORPORATION
Address of Applicant :3 3 2 Nihonbashi Hamacho Chuo ku Tokyo 1038552 Japan
(72)**Name of Inventor :**
1)OOHASHI Takashi
2)ARAKI Nobuyuki

(57) Abstract :
The invention is a method for producing trimethylsulfoxonium bromide by reacting dimethyl sulfoxide with methyl bromide (MeBr); MeBr is added so as to satisfy (1) and (2): (1) MeBr is added at an addition rate according with a predetermined injection profile; (2) MeBr is added when the temperature in the reaction system reaches a predetermined upper limit temperature.

No. of Pages : 18 No. of Claims : 12

(12) PATENT APPLICATION PUBLICATION
(19) INDIA
(22) Date of filing of Application :10/10/2014
(21) Application No.8481/DELNP/2014 A
(43) Publication Date : 08/05/2015

(54) Title of the invention : AFFINITY REAGANTS FOR PROTEIN PURIFICATION

(51) International classification :C40B30/04
(31) Priority Document No :61/611999
(32) Priority Date :16/03/2012
(33) Name of priority country :U.S.A.
(86) International Application No :PCT/US2013/032675
Filing Date :15/03/2013
(87) International Publication No :WO 2013/138793
(61) Patent of Addition to Application Number :NA
Filing Date :NA
(62) Divisional to Application Number :NA
Filing Date :NA

(71)**Name of Applicant :**
1)IMPOSSIBLE FOODS INC.
Address of Applicant :525 Chesapeake Drive Redwood City California 94063 U.S.A.
2)THE BOARD OF TRUSTEES OF THE LELAND STANFORD JUNIOR UNIVERSITY
(72)**Name of Inventor :**
1)BROWN Patrick
2)WATTS R. Edward
3)HARBURY Pehr

(57) Abstract :
Disclosed herein are methods and compositions for purifying proteins from crude solutions.

No. of Pages : 54 No. of Claims : 96

(12) PATENT APPLICATION PUBLICATION
(19) INDIA
(22) Date of filing of Application :10/10/2014
(21) Application No.8482/DELNP/2014 A
(43) Publication Date : 08/05/2015

(54) Title of the invention : PNEUMATIC TIRE

(51) International classification :B60C9/18,B60C9/22,B60C9/30
(31) Priority Document No :2012098928
(32) Priority Date :24/04/2012
(33) Name of priority country :Japan
(86) International Application No :PCT/JP2013/002794
Filing Date :24/04/2013
(87) International Publication No :WO 2013/161296
(61) Patent of Addition to Application Number :NA
Filing Date :NA
(62) Divisional to Application Number :NA
Filing Date :NA

(71)**Name of Applicant :**
1)BRIDGESTONE CORPORATION
Address of Applicant :10 1 Kyobashi 1 chome Chuo ku Tokyo 1048340 Japan
(72)**Name of Inventor :**
1)KOZUKI Kentaro

(57) Abstract :
Provided is a pneumatic tire having improved noise performance obtained while maintaining the driving stability performance and the rolling resistance performance. A pneumatic tire comprises on the outside of the crown of the carcass in the radial direction of the tire: a tilted belt comprising at least one tilted belt layer having cords tilted relative to the circumferential direction of the tire at an angle in the range of 35° to 90° inclusive; and a circumferential belt comprising at least one circumferential belt layer having cords extending in the circumferential direction of the tire. The circumferential rigidity per unit width of any portion of the high rigidity region of the circumferential belt the high rigidity region being a region including the equator of the tire is higher than the circumferential rigidity per unit width of any portion of the remaining region of the circumferential belt and in such a manner that the circumferential rigidity per unit width of the remaining region is constant in the width direction of the tire or is increased toward the high rigidity region.

No. of Pages : 32 No. of Claims : 7

(12) PATENT APPLICATION PUBLICATION
(19) INDIA
(22) Date of filing of Application :10/10/2014
(21) Application No.8483/DELNP/2014 A
(43) Publication Date : 08/05/2015

(54) Title of the invention : PROCESS FOR THE MANUFACTURE OF CYCLIC UNDECAPEPTIDES

(51) International classification :C07K7/64
(31) Priority Document No :61/644616
(32) Priority Date :09/05/2012
(33) Name of priority country :U.S.A.
(86) International Application No :PCT/EP2013/059672
Filing Date :08/05/2013
(87) International Publication No :WO 2013/167703
(61) Patent of Addition to Application Number :NA
Filing Date :NA
(62) Divisional to Application Number :NA
Filing Date :NA

(71)**Name of Applicant :**
1)NOVARTIS AG
Address of Applicant :Lichtstrasse 35 CH 4056 Basel Switzerland
(72)**Name of Inventor :**
1)GALLOU Fabrice
2)RISS Bernard

(57) Abstract :
The present invention relates to processes and intermediates useful for the manufacture of cyclic undecapeptides such as Alisporivir a non immunosuppressive cyclosporine A derivative. The cyclosporin is acylated on the butenyl methyl threonine side chain and then subjected to a ring opening reaction (the ring opens between the sarcosine and the N methyl leucine residues). This linear peptide intermediate is subjected to Edman degradation (removal of the N terminal residue) as to give the second linear decapeptide intermediate e.g. of sequence Val N(Me)Leu Ala Ala N(Me)Leu N(Me) Leu N(Me)Val N(Me)Bmt Abu Sar when starting from CsA.

No. of Pages : 28 No. of Claims : 16

(12) PATENT APPLICATION PUBLICATION
(19) INDIA
(22) Date of filing of Application :15/04/2014
(21) Application No.2987/DELNP/2014 A
(43) Publication Date : 08/05/2015

(54) Title of the invention : SOLUTION FOR ORAL ADMINISTRATION

(51) International classification :A61K31/496,A61K9/08,A61K31/185
(31) Priority Document No :61/548859
(32) Priority Date :19/10/2011
(33) Name of priority country :U.S.A.
(86) International Application No :PCT/JP2012/077668
Filing Date :19/10/2012
(87) International Publication No :WO 2013/058411
(61) Patent of Addition to Application Number :NA
Filing Date :NA
(62) Divisional to Application Number :NA
Filing Date :NA

(71)**Name of Applicant :**
1)OTSUKA PHARMACEUTICAL CO. LTD.
Address of Applicant :2 9 Kanda Tsukasamachi Chiyoda ku Tokyo 1018535 Japan
(72)**Name of Inventor :**
1)OKAMOTO Ayako

(57) Abstract :
Provided is a solution suitable for oral administration of 7 [4 (4 benzo[b]thiophen 4 yl piperazin 1 yl)butoxy] 1H quinolin 2 one(compound (I)) or a salt thereof. A solution for oral administration containing compound (I) or a salt thereof and at least one compound selected from the group consisting of lactic acid phosphoric acid glycolic acid malic acid tartaric acid citric acid succinic acid and acetic acid and having pH 2.5 4.5.

No. of Pages : 26 No. of Claims : 5

(12) PATENT APPLICATION PUBLICATION
(21) Application No.306/DELNP/2012 A
(19) INDIA
(22) Date of filing of Application :11/01/2012
(43) Publication Date : 08/05/2015

(54) Title of the invention : INTERNET PREFERENCE LEARNING FACILITY

(51) International classification :G06Q 30/00
(31) Priority Document No :12/483,768
(32) Priority Date :12/06/2009
(33) Name of priority country :U.S.A.
(86) International Application No :PCT/US2010/038259
Filing Date :11/06/2010
(87) International Publication No :WO 2010/144766
(61) Patent of Addition to Application Number :NA
Filing Date :NA
(62) Divisional to Application Number :NA
Filing Date :NA

(71)**Name of Applicant :**
1)HUNCH INC.
Address of Applicant :54 W 21ST STREET, SUITE 1001, NEW YORK, NEW YORK 10010, UNITED STATES OF AMERICA
(72)**Name of Inventor :**
1)PINCKNEY, THOMAS
2)DIXON, CHRISTOPHER
3)GATTIS, MATTHEW, R.,

(57) Abstract :
The invention provides a dry composition for admixture with water, wherein the composition is optionally presented in two or more parts and comprises, per litre of solution to be made, the following components: (a) 85 to 115 g polyethylene glycol (PEG) having an average molecular weight of 2500 to 4500; (b) 6 to 9 g sodium sulfate; (c) 2 to 3 g sodium chloride; (d) 0.5 to 1.5 g potassium chloride; (e) 5 to 15 g of an organic acid component; and (f) orange flavouring. Also provided are solutions, kits, unit doses and methods that comprise use the compositions.

No. of Pages : 120 No. of Claims : 45

(12) PATENT APPLICATION PUBLICATION
(19) INDIA
(22) Date of filing of Application :11/01/2012
(21) Application No.313/DELNP/2012 A
(43) Publication Date : 08/05/2015

(54) Title of the invention : ANTIBODIES DIRECTED TO THE DELETION MUTANTS OF EPIDERMAL GROWTH FACTOR RECEPTOR AND USES THEREOF

(51) International classification :C07K 16/28
(31) Priority Document No :60/483,145
(32) Priority Date :27/06/2003
(33) Name of priority country :U.S.A.
(86) International Application No :PCT/US2004/020295
Filing Date :25/06/2004
(87) International Publication No :WO 2005/010151
(61) Patent of Addition to Application Number :NA
Filing Date :NA
(62) Divisional to Application Number :6074/DELNP/2005
Filed on :26/12/2005

(71)**Name of Applicant :**
1)AMGEN FREMONT INC.
Address of Applicant :6701 KAISER DRIVE, FREMONT, CA 94555, U.S.A.
(72)**Name of Inventor :**
1)WEBER, RICHARD
2)FENG, XIAO
3)FOORD, ORIT
4)GREEN, LARRY
5)GUDAS, JEAN
6)KEYT, BRUCE
7)LIU, YING
8)RATHANASWAMI, PALANISWAMI
9)RAYA, ROBERT
10)YANG, XIAO, DONG
11)CORVALAN, JOSE
12)FOLTZ, IAN
13)JIA, XIAO-CHI
14)KANG, JASPAL
15)KING, CHADWICK, T.
16)KLAKAMP, SCOTT, L.
17)SU, QIAOJUAN, JANE

(57) Abstract :
The present invention relates to novel antibodies, particularly antibodies directed against deletion mutants of epidermal growth factor receptor and particularly to the type III deletion mutant, EGFRvIII. The invention also relates to human monoclonal antibodies directed against deletion mutants of epidermal growth factor receptor and particularly to EGFRvIII. Diagnostic and therapeutic formulations of such antibodies, and immunoconjugates thereof, are also provided.

No. of Pages : 239 No. of Claims : 22

(12) PATENT APPLICATION PUBLICATION
(19) INDIA
(22) Date of filing of Application :10/10/2014
(21) Application No.8487/DELNP/2014 A
(43) Publication Date : 08/05/2015

(54) Title of the invention : EFFICIENT SYNTHESIS OF ETHYLENEDICYSTEINE SUGAR CONJUGATES FOR IMAGING AND THERAPY

(51) International classification :A61K49/06,A61K31/425,A61K31/70
(31) Priority Document No :61/615684
(32) Priority Date :26/03/2012
(33) Name of priority country :U.S.A.
(86) International Application No :PCT/US2013/033919
Filing Date :26/03/2013
(87) International Publication No :WO 2013/148710
(61) Patent of Addition to Application Number :NA
Filing Date :NA
(62) Divisional to Application Number :NA
Filing Date :NA

(71)**Name of Applicant :**
1)BOARD OF REGENTS THE UNIVERSITY OF TEXAS SYSTEM
Address of Applicant :201 W. 7th Street Austin TX 78701 U.S.A.
(72)**Name of Inventor :**
1)YANG David J.
2)YU Dong Fang

(57) Abstract :
Novel methods of synthesis of ethylenedicysteine sugar conjugates and therapeutic and diagnostic applications of such conjugates are disclosed. Methods of synthesizing these conjugates in high purity are also presented as using starting materials such as thiazolidine carboxylic acid. Also disclosed are methods of imaging treating and diagnosing disease in a subject using these conjugates prepared herein such as methods of imaging a tumor within a subject and methods of diagnosing myocardial ischemia.

No. of Pages : 50 No. of Claims : 42

(12) PATENT APPLICATION PUBLICATION
(19) INDIA
(22) Date of filing of Application :10/10/2014
(21) Application No.8488/DELNP/2014 A
(43) Publication Date : 08/05/2015

(54) Title of the invention : APPARATUS FOR MOVING CONTAINERS

(51) International classification :F26B5/06,F26B25/00
(31) Priority Document No :MI2012A000399
(32) Priority Date :14/03/2012
(33) Name of priority country :Italy
(86) International Application No :PCT/IB2013/000378
Filing Date :13/03/2013
(87) International Publication No :WO 2013/136161
(61) Patent of Addition to Application Number :NA
Filing Date :NA
(62) Divisional to Application Number :NA
Filing Date :NA

(71)**Name of Applicant :**
1)I.M.A. INDUSTRIA MACCHINE AUTOMATICHE S.P.A.
Address of Applicant :Via Emilia 428/442 I 40064 Ozzano Dell Emilia Italy
(72)**Name of Inventor :**
1)TREBBI Claudio
2)GABUSI Gabriele

(57) Abstract :
Machine for processing substances comprising an apparatus for moving containers (11) along a plane and guide means (23) cooperating with slider means (27).

No. of Pages : 43 No. of Claims : 13

(12) PATENT APPLICATION PUBLICATION
(21) Application No.8489/DELNP/2014 A
(19) INDIA
(22) Date of filing of Application :10/10/2014
(43) Publication Date : 08/05/2015

(54) Title of the invention : UNIVERSAL SCALPEL BLADE REMOVER

(51) International classification :A61B17/3217
(31) Priority Document No :2012901221
(32) Priority Date :26/03/2012
(33) Name of priority country :Australia
(86) International Application No :PCT/AU2013/000294
Filing Date :25/03/2013
(87) International Publication No :WO 2013/142897
(61) Patent of Addition to Application Number :NA
Filing Date :NA
(62) Divisional to Application Number :NA
Filing Date :NA

(71)**Name of Applicant :**
1)QLICKSMART PTY LTD
Address of Applicant :c/ Cullens Patent and Trade Mark Attorneys Level 32 239 George Street Brisbane Queensland 4000 Australia
(72)**Name of Inventor :**
1)HENRY Robert Anthony Neville

(57) Abstract :
A scalpel blade remover (10) is used to remove a blade (1) from a tang (2) of a scalpel. The blade remover comprises a housing (12) and a planar member (21) mounted in the housing (12) with a longitudinal slot (24) therein. A slider (30) is adapted to slide along the planar member (21) and has an opening (34) for receiving a portion of the tang (2) therein. The slider (30) is movable along the planar member when pressed by the tang (2) being inserted into the opening (34) and moved along the slot (24) with the blade (1) being located under the slider (30). Movement of the slider (30) along the planar member (21) causes the planar member to separate the rear end of the blade (1) from the tang (2). A stop formation (27 28) on the planar member (21) engages the rear end of the blade (1) after it has been separated from the tang and prevents the blade (1) being withdrawn along the member. Upon withdrawal of the tang (2) the blade (1) is stripped from the tang (2). In one embodiment the planar member (21) is pivotally mounted and the blade remover (10) includes a tilting mechanism actuated by movement of the slider (30) along the planar member (21). In another embodiment the planar member is fixedly mounted relative to the housing (12) at an oblique angle to the direction of movement of the tang (2).

No. of Pages : 23 No. of Claims : 20

(12) PATENT APPLICATION PUBLICATION
(21) Application No.8357/DELNP/2014 A
(19) INDIA
(22) Date of filing of Application :08/10/2014
(43) Publication Date : 08/05/2015

(54) Title of the invention : COMPOSITION FOR REDUCTION OF TRPA1 AND TRPV1 SENSATIONS

(51) International classification :A61K8/42,A61Q5/10,A61K8/30
(31) Priority Document No :61/652035
(32) Priority Date :25/05/2012
(33) Name of priority country :U.S.A.
(86) International Application No :PCT/US2013/040293
Filing Date :09/05/2013
(87) International Publication No:WO 2013/176897
(61) Patent of Addition to Application Number :NA
Filing Date :NA
(62) Divisional to Application Number :NA
Filing Date :NA

(71)**Name of Applicant :**
1)THE PROCTER & GAMBLE COMPANY
Address of Applicant :One Procter & Gamble Plaza Cincinnati Ohio 45202 U.S.A.
(72)**Name of Inventor :**
1)HAUGHT John Christian
2)SREEKRISHNA Koti Tatachar
3)DAS Sourav
4)HOKE Steven Hamilton II
5)COFFINDAFFER Timothy Woodrow
6)BAKES Katharine Anne
7)GLANDORF William Michael

(57) Abstract :
A personal care composition and method of using a personal care composition having menthol and/or hydrogen peroxide and a TRPA1 and/or TRPV1 receptor antagonists.

No. of Pages : 66 No. of Claims : 15

(12) PATENT APPLICATION PUBLICATION
(19) INDIA
(22) Date of filing of Application :08/10/2014
(21) Application No.8358/DELNP/2014 A
(43) Publication Date : 08/05/2015

(54) Title of the invention : INSECTICIDAL OIL IN WATER (O/W) FORMULATION

(51) International classification :A01N25/04,A01N53/00,A01N25/18
(31) Priority Document No :12168251.2
(32) Priority Date :16/05/2012
(33) Name of priority country :EPO
(86) International Application No :PCT/EP2013/059920
Filing Date :14/05/2013
(87) International Publication No :WO 2013/171201
(61) Patent of Addition to Application Number :NA
Filing Date :NA
(62) Divisional to Application Number :NA
Filing Date :NA

(71)**Name of Applicant :**
1)BAYER CROPSCIENCE AG
Address of Applicant :Alfred Nobel Str. 50 40789 Monheim Germany
(72)**Name of Inventor :**
1)KIJLSTRA Johan
2)AKLE Francois
3)BERNI Jos
4)HEINRICH Jean Luc

(57) Abstract :
The invention relates to an insecticidal oil in water (O/W) formulation comprising at least one insecticidal active ingredient and at least one flammable salt and to the production of said formulation. The formulation according to the invention is particularly suitable for treating suitable carrier materials in particular paper carriers in a cost effective single step process with the aid of conventional application methods. The invention also relates to insecticides and smouldering products which can be produced by treating a carrier material with the formulation according to the invention.

No. of Pages : 32 No. of Claims : 15

(12) PATENT APPLICATION PUBLICATION
(19) INDIA
(22) Date of filing of Application :08/10/2014
(21) Application No.8359/DELNP/2014 A
(43) Publication Date : 08/05/2015

(54) Title of the invention : BUMP CUT ON HOLE EDGE

(51) International classification :A61B17/72,A61B17/74
(31) Priority Document No :61/624678
(32) Priority Date :16/04/2012
(33) Name of priority country :U.S.A.
(86) International Application No :PCT/US2013/035891
Filing Date :10/04/2013
(87) International Publication No :WO 2013/158429
(61) Patent of Addition to Application Number :NA
Filing Date :NA
(62) Divisional to Application Number :NA
Filing Date :NA

(71)**Name of Applicant :**
1)SYNTHES GMBH
Address of Applicant :Eimattstrasse 3 CH 4436 Oberdorf Switzerland
(72)**Name of Inventor :**
1)KMIEC Stanley J. Jr.

(57) Abstract :
A bone fixation device includes an elongated body having a first channel extending there through and configured for insertion into a bone a first opening formed on a first side wall of the body the first side wall facing a lateral direction when implanted in a target orientation within the bone and a second opening formed on a second side wall of the body opposite the first opening. A second channel extends through the body from the first opening to the second opening and is dimensioned to permit insertion of an implant there through. A first bump is positioned about a periphery of the first opening at a location at which a stress concentration would be a maximum if no such first bump were formed the first bump being dimensioned to diffuse a concentration of stress about the periphery due to forces applied thereto by an implant extending through the second channel.

No. of Pages : 21 No. of Claims : 20

(12) PATENT APPLICATION PUBLICATION
(19) INDIA
(22) Date of filing of Application :10/10/2014
(21) Application No.8492/DELNP/2014 A
(43) Publication Date : 08/05/2015

(54) Title of the invention : V BELT FOR TRANSMITTING HIGH LOADS

(51) International classification :F16G5/16
(31) Priority Document No :2012061605
(32) Priority Date :19/03/2012
(33) Name of priority country :Japan
(86) International Application No :PCT/JP2013/001846
Filing Date :18/03/2013
(87) International Publication No :WO 2013/140783
(61) Patent of Addition to Application Number :NA
Filing Date :NA
(62) Divisional to Application Number :NA
Filing Date :NA

(71)**Name of Applicant :**
1)BANDO CHEMICAL INDUSTRIES LTD.
Address of Applicant :6 6 Minatojima Minamimachi 4 chome Chuo ku Kobe shi Hyogo 6500047 Japan
(72)**Name of Inventor :**
1)SAKANAKA Hiroyuki

(57) Abstract :
This V belt for transmitting high loads has a large number of blocks (10,10 ...) which are joined to tension bands (1,1) in a fixed manner and transfers power through the meshing of an engagement part of each block (10) and a part to be engaged of each tension band (1). A belt pitch width (a) which represents the width of each block where core wires (1b) of each tension band (1) are positioned and a tension band meshing thickness (b) which represents the thickness between the bottom surface of an upper recess (2) and the bottom surface of a lower recess (3) on each tension band (1) are related such that b/a = 0.08 (i.e. the tension band meshing thickness (b) is not more than 8% of the belt pitch width (a)); and the meshing thickness (b) of each tension band (1) and the total tension band thickness (c) which represents the thickness of cogs (4,5) excluding the upper and lower recesses (2,3) on each tension band (1) are related such that c/b = 2.0.

No. of Pages : 38 No. of Claims : 7

(12) PATENT APPLICATION PUBLICATION
(21) Application No.8493/DELNP/2014 A
(19) INDIA
(22) Date of filing of Application :10/10/2014
(43) Publication Date : 08/05/2015

(54) Title of the invention : V BELT FOR TRANSMITTING HIGH LOADS

(51) International classification :F16G5/16
(31) Priority Document No :2012061594
(32) Priority Date :19/03/2012
(33) Name of priority country :Japan
(86) International Application No :PCT/JP2013/001847
Filing Date :18/03/2013
(87) International Publication No :WO 2013/140784
(61) Patent of Addition to Application Number :NA
Filing Date :NA
(62) Divisional to Application Number :NA
Filing Date :NA

(71)**Name of Applicant :**
1)BANDO CHEMICAL INDUSTRIES LTD.
Address of Applicant :6 6 Minatojima Minamimachi 4 chome Chuo ku Kobe shi Hyogo 6500047 Japan
(72)**Name of Inventor :**
1)SAKANAKA Hiroyuki

(57) Abstract :
In order to enable changes over time in the tension of a V belt for transmitting high loads (B) associated with changes in a thrust tension conversion ratio from the initial travel of the V belt to be suppressed the sides of a tension belt (1) and blocks (10) in the belt width direction constitute sliding surfaces that are in contact with a pulley groove surface. The area (S1) of the sliding surface (1c) of the tension band (1) and the area (S2) of the sliding surface (12) of a block (10) are set in such a manner that the relationship therebetween is S1/S2 = 0.2 (i.e. the area (S1) of the tension band sliding surface (1c) is not more than 20% of the area (S2) of the block sliding surface (12)).

No. of Pages : 36 No. of Claims : 7

(12) PATENT APPLICATION PUBLICATION
(19) INDIA
(22) Date of filing of Application :10/10/2014
(21) Application No.8490/DELNP/2014 A
(43) Publication Date : 08/05/2015

(54) Title of the invention : DISTRIBUTOR UNIT

(51) International classification	:B65G47/14,B65B35/28,B65G11/20
(31) Priority Document No	:MI2012A000398
(32) Priority Date	:14/03/2012
(33) Name of priority country	:Italy
(86) International Application No	:PCT/IB2013/000383
Filing Date	:14/03/2013
(87) International Publication No	:WO 2013/136162
(61) Patent of Addition to Application Number	:NA
Filing Date	:NA
(62) Divisional to Application Number	:NA
Filing Date	:NA

(71)**Name of Applicant :**
1)I.M.A. INDUSTRIA MACCHINE AUTOMATICHE S.P.A.
Address of Applicant :Via Emilia 428/442 I 40064 Ozzano Dell Emilia Italy
(72)**Name of Inventor :**
1)BARONCINI Ivano

(57) Abstract :
A distributor unit (110) suitable to distribute tablets (12) comprises an aligner channel (13) cooperating with a transfer channel (11) having an entrance zone (17). Feed means (21) are associated to said transfer channel (11) in order to work on the tablets (12).

No. of Pages : 18 No. of Claims : 16

(12) PATENT APPLICATION PUBLICATION
(19) INDIA
(22) Date of filing of Application :10/10/2014
(21) Application No.8491/DELNP/2014 A
(43) Publication Date : 08/05/2015

(54) Title of the invention : FOOD STERILIZATION AND PRESERVATION METHOD

(51) International classification :A23L3/24,A23L3/22,A23L3/358
(31) Priority Document No :2012064923
(32) Priority Date :22/03/2012
(33) Name of priority country :Japan
(86) International Application No :PCT/JP2013/058113
Filing Date :21/03/2013
(87) International Publication No :WO 2013/141310
(61) Patent of Addition to Application Number :NA
Filing Date :NA
(62) Divisional to Application Number :NA
Filing Date :NA

(71)**Name of Applicant :**
1)SATO Chokichi
Address of Applicant :5 1 Uenosakuragi 2 chome Taito ku Tokyo 1100002 Japan
2)OHKI Hisaharu
(72)**Name of Inventor :**
1)SATO Chokichi
2)OHKI Hisaharu

(57) Abstract :
The present invention addresses the problem of providing a food sterilization and preservation method whereby a mycotoxin can be eliminated from a food and the recurrence of the mycotoxin can be prevented even during prolonged preservation. For the purpose of solving the problem provided is a method for eliminating a mycotoxin said method comprising: a water vapor plasma irradiation step for irradiating water vapor plasma to a food that is contaminated with the mycotoxin; and a step for applying a powder of a calcined natural calcium material to the food that has been treated in the water vapor plasma irradiation step.

No. of Pages : 42 No. of Claims : 7

(12) PATENT APPLICATION PUBLICATION
(19) INDIA
(22) Date of filing of Application :10/10/2014
(21) Application No.8484/DELNP/2014 A
(43) Publication Date : 08/05/2015

(54) Title of the invention : INTAGLIO PRINTING PRESS

(51) International classification	:B41F13/00,B41F13/008,B41F9/08
(31) Priority Document No	:12165388.5
(32) Priority Date	:24/04/2012
(33) Name of priority country	:EPO
(86) International Application No	:PCT/IB2013/053251
Filing Date	:24/04/2013
(87) International Publication No	:WO 2013/160856
(61) Patent of Addition to Application Number	:NA
Filing Date	:NA
(62) Divisional to Application Number	:NA
Filing Date	:NA

(71)**Name of Applicant :**
1)KBA NOTASYS SA
Address of Applicant :PO Box 347 55 Avenue du Grey CH 1000 Lausanne 22 Switzerland
(72)**Name of Inventor :**
1)KERSTEN Thomas
2)SCHAEDE Johannes Georg
3)WRSCH Alain
4)SCHWITZKY Volkmar Rolf
5)SCHARKUS Volker

(57) Abstract :
There is described an intaglio printing press (1; 1) comprising an intaglio cylinder (8) and an ink wiping system (10) with a rotating wiping roller assembly (11) contacting a circumference of the intaglio cylinder (8) for wiping excess ink from the surface of the intaglio cylinder (8) a rotational speed of the wiping cylinder being adjustable with respect to a rotational speed of the intaglio cylinder (8). The intaglio printing press (1; 1) comprises an adjustable drive unit (25) which adjustable drive unit (25) is interposed between the wiping roller assembly (11) acting as a rotating output body of the adjustable drive unit (25) and a driving gear (100) coupled to the intaglio cylinder (8) and acting as a rotating input body of the adjustable drive unit (25). The adjustable drive unit (25) is designed to allow selected adjustment of a rotational speed of the wiping roller assembly (11) with respect to a rotational speed of the driving gear (100). In an adjusting state of the adjustable drive unit (25) driving into rotation of the wiping roller assembly (11) is adjusted by means of an adjustment motor (700) of the adjustable drive unit (25). In a non adjusting state of the adjustable drive unit (25) the adjustment motor (700) is inoperative and driving into rotation of the wiping roller assembly (11) is performed exclusively mechanically via the adjustable drive unit (25) the wiping roller assembly (11) rotating at a defined rotational speed with respect to the rotational speed of the intaglio cylinder (8).

No. of Pages : 29 No. of Claims : 14

(12) PATENT APPLICATION PUBLICATION
(19) INDIA
(22) Date of filing of Application :11/01/2012
(21) Application No.98/DEL/2012 A
(43) Publication Date : 08/05/2015

(54) Title of the invention : HEAT TRANSFER PASSES FOR SOLAR BOILERS

(51) International classification :B61G
(31) Priority Document No :13/007,262
(32) Priority Date :14/01/2011
(33) Name of priority country :U.S.A.
(86) International Application No :NA
Filing Date :NA
(87) International Publication No : NA
(61) Patent of Addition to Application Number :NA
Filing Date :NA
(62) Divisional to Application Number :NA
Filing Date :NA

(71)**Name of Applicant :**
1)BABCOCK POWER SERVICES INC.
Address of Applicant :5 Neponset Street Worcester MA 01606 United States of America
(72)**Name of Inventor :**
1)PLOTKIN Andrew
2)GILLUM Craig

(57) Abstract :
A boiler for a solar receiver includes a plurality of boiler walls arranged end to end surrounding a boiler interior space. Each wall includes a plurality of side by side solar receiver panels. The panels are fluidly connected to one another by way of a steam circuit. The boiler also includes a plurality of conduits each forming a portion of the steam circuit fluidly connecting the panels. The panels and conduits form a plurality of heat transfer passes in the steam circuit. In certain embodiments the steam circuit includes between two and ten passes inclusively.

No. of Pages : 28 No. of Claims : 21

(12) PATENT APPLICATION PUBLICATION
(19) INDIA
(22) Date of filing of Application :08/10/2014
(21) Application No.8380/DELNP/2014 A
(43) Publication Date : 08/05/2015

(54) Title of the invention : PATIENT SLING

(51) International classification :A61G7/10
(31) Priority Document No :12160698.2
(32) Priority Date :22/03/2012
(33) Name of priority country :EPO
(86) International Application No :PCT/EP2013/055167
Filing Date :13/03/2013
(87) International Publication No :WO 2013/139665
(61) Patent of Addition to Application Number :NA
Filing Date :NA
(62) Divisional to Application Number :NA
Filing Date :NA

(71)**Name of Applicant :**
1)ARJO HOSPITAL EQUIPMENT AB
Address of Applicant :Box 61 S 241 00 Eslov Sweden
(72)**Name of Inventor :**
1)BERG Eva
2)LINDELL Anette
3)OLSSON Emma

(57) Abstract :
The patient transfer sheet (10) acts as a combined sling and bed cover and includes a substantially rectangular sheet portion (22) of a size to fit over a standard bed mattress and to which are attached a plurality of straps (20) for coupling to a hoist (14). The patient transfer sheet (10) is preferably made of a single layered material which is breathable strong and soft. The patient transfer sheet (10) can act as a sling for transportation/repositioning of a patient as well as a replacement bed covering to replace conventional bed linen. The patient can thus be transported onto a bed (30) without needing to remove the patient from the sling.

No. of Pages : 18 No. of Claims : 19

(12) PATENT APPLICATION PUBLICATION
(21) Application No.8381/DELNP/2014 A
(19) INDIA
(22) Date of filing of Application :08/10/2014
(43) Publication Date : 08/05/2015

(54) Title of the invention : PRESSURE SEWER CONTROL SYSTEM AND METHOD

(51) International classification :E03F5/22,F04D15/00,G05D9/00
(31) Priority Document No :2012901005
(32) Priority Date :14/03/2012
(33) Name of priority country :Australia
(86) International Application No :PCT/AU2012/000903
Filing Date :31/07/2012
(87) International Publication No :WO 2013/149281
(61) Patent of Addition to Application Number :NA
Filing Date :NA
(62) Divisional to Application Number :NA
Filing Date :NA

(71)**Name of Applicant :**
1)SOUTH EAST WATER CORPORATION
Address of Applicant :20 Corporate Drive Heatherton Victoria 3202 Australia
(72)**Name of Inventor :**
1)MOON Rodney Leonard
2)SUTHERLAND Martin Alexander
3)FORSTER KNIGHT Andrew

(57) Abstract :
Embodiments relate generally to a pump control system for a pressure sewer installation. The system comprises a controller arranged to control supply of power to a pump of the pressure sewer installation. The controller is arranged to receive an output signal from a sensor in a fluid reservoir of the pressure sewer installation the output signal being indicative of a measured fluid level in the fluid reservoir. A memory is accessible to the controller and is arranged to store operation information pertaining to operation of the pressure sewer installation. A wireless transceiver is in communication with the controller to allow the controller to communicate with a remote server over a communications network.

No. of Pages : 31 No. of Claims : 19

(12) PATENT APPLICATION PUBLICATION
(19) INDIA
(22) Date of filing of Application :08/10/2014
(21) Application No.8382/DELNP/2014 A
(43) Publication Date : 08/05/2015

(54) Title of the invention : METHOD FOR PRODUCING OPTICAL MATERIAL

(51) International classification :C08G75/08,C08G18/38,G02B1/04
(31) Priority Document No :2012061765
(32) Priority Date :19/03/2012
(33) Name of priority country :Japan
(86) International Application No :PCT/JP2013/054935
Filing Date :26/02/2013
(87) International Publication No :WO 2013/140959
(61) Patent of Addition to Application Number :NA
Filing Date :NA
(62) Divisional to Application Number :NA
Filing Date :NA

(71)**Name of Applicant :**
1)MITSUBISHI GAS CHEMICAL COMPANY INC.
Address of Applicant :MITSUBISHI Building 5 2 Marunouchi 2 chome Chiyoda ku Tokyo 1008324 Japan
(72)**Name of Inventor :**
1)TAKEMURA Kouhei
2)OKADA Hiroyuki
3)HORIKOSHI Hiroshi

(57) Abstract :
The present invention provides a method for producing an optical material comprising a predetermined (a) compound (b) compound (c) compound (d) compound and (e) compound wherein the compounding method minimizes the occurrence of a defect where peeling traces on a lens linger. Going through a first step to fifth step minimizes the defect where peeling traces linger. First step: a step for dissolving the (b) compound into the (a) compound to obtain a first solution. Second step: a step for adding the (e) compound to the first solution obtained in the first step and then mixing to obtain a second solution not comprising the (d) compound. Third step: a step for adding the (c) compound to the second solution obtained in the second step to obtain a reaction mixture. Fourth step: a step for adding the (d) compound to the reaction mixture obtained in the third step and then mixing to obtain a resin composition for an optical material. Fifth step: a step for cast molding the resin composition for an optical material obtained in the fourth step and then polymerizing to obtain the optical material.

No. of Pages : 30 No. of Claims : 7

(12) PATENT APPLICATION PUBLICATION
(21) Application No.8494/DELNP/2014 A
(19) INDIA
(22) Date of filing of Application :10/10/2014
(43) Publication Date : 08/05/2015

(54) Title of the invention : ACTIVE ENERGY RAY CURABLE COMPOSITION ACTIVE ENERGY RAY CURABLE COATING MATERIAL USING SAME AND ACTIVE ENERGY RAY CURABLE PRINTING INK USING SAME

(51) International classification	:C08G59/17,C08F290/06,C09D11/00
(31) Priority Document No	:2012062043
(32) Priority Date	:19/03/2012
(33) Name of priority country	:Japan
(86) International Application No	:PCT/JP2013/057057
Filing Date	:13/03/2013
(87) International Publication No	:WO 2013/141117
(61) Patent of Addition to Application Number	:NA
Filing Date	:NA
(62) Divisional to Application Number	:NA
Filing Date	:NA

(71)**Name of Applicant :**
1)DIC CORPORATION
Address of Applicant :35 58 Sakashita 3 chome Itabashi ku Tokyo 1748520 Japan
(72)**Name of Inventor :**
1)MUKAI Takashi
2)OKUDA Tatsushi

(57) Abstract :
Provided is an active energy ray curable composition which is characterized by being obtained by reacting (A) a polyfunctional acrylate (B) an aromatic dicarboxylic acid and (C) an aromatic epoxy resin and then reacting the obtained reactant with (D) a carboxylic acid having a polymerizable unsaturated group. In cases where this active energy ray curable composition is used in a coating material such as a hard coat agent this active energy ray curable composition is capable of providing a cured film of the coating material with high scratch resistance. Consequently this active energy ray curable composition is suitable as a material for a hard coat agent that forms a protective film on the surface of an article. In cases where this active energy ray curable composition is used in a printing ink this active energy ray curable composition is capable of providing the ink with high anti misting properties and is also capable of providing a cured film of the printing ink with high adhesion to a base and high solvent resistance. Consequently this active energy ray curable composition is suitable as a binder for various printing inks such as a lithographic printing ink and a gravure printing ink.

No. of Pages : 38 No. of Claims : 7

(12) PATENT APPLICATION PUBLICATION
(19) INDIA
(22) Date of filing of Application :10/10/2014
(21) Application No.8495/DELNP/2014 A
(43) Publication Date : 08/05/2015

(54) Title of the invention : AN ILOPERIDONE METABOLITE FOR USE IN THE TREATMENT OF PSYCHIATRIC DISORDERS

(51) International classification :A61K31/454,A61P25/18
(31) Priority Document No :61/610664
(32) Priority Date :14/03/2012
(33) Name of priority country :U.S.A.
(86) International Application No :PCT/US2013/031413
Filing Date :14/03/2013
(87) International Publication No :WO 2013/138602
(61) Patent of Addition to Application Number :NA
Filing Date :NA
(62) Divisional to Application Number :NA
Filing Date :NA

(71)**Name of Applicant :**
1)VANDA PHARMACEUTICALS INC.
Address of Applicant :Suite 300 E 2200 Pennsylvania Ave NW Washington DC 20037 U.S.A.
(72)**Name of Inventor :**
1)PHADKE Deepak
2)WOLFGANG Curt D.
3)POLYMEROPOULOS Mihael H.
4)FEENEY John Joseph
5)BIRZNIEKS Gunther

(57) Abstract :
R P88 is used for the treatment of disorders amenable to treatment with an atypical antipsychotic.

No. of Pages : 22 No. of Claims : 17

(12) PATENT APPLICATION PUBLICATION
(21) Application No.8496/DELNP/2014 A
(19) INDIA
(22) Date of filing of Application :10/10/2014
(43) Publication Date : 08/05/2015

(54) Title of the invention : MICROCAPSULES CONTAINING AN OXIDIZABLE ACTIVE AND A PROCESS FOR PREPARING THE SAME

(51) International classification	:A23D9/00,A23L1/00,A23L1/0534
(31) Priority Document No	:12305434.8
(32) Priority Date	:12/04/2012
(33) Name of priority country	:EPO
(86) International Application No	:PCT/EP2013/057739
Filing Date	:12/04/2013
(87) International Publication No	:WO 2013/153220
(61) Patent of Addition to Application Number	:NA
Filing Date	:NA
(62) Divisional to Application Number	:NA
Filing Date	:NA

(71)**Name of Applicant :**
1)IDCAPS
Address of Applicant :4 rue Samuel Champlain Zone Agrocan Chef Baie F 17000 La Rochelle France
(72)**Name of Inventor :**
1)BUISSON Pierre
2)CHAIGNEAU Carine
3)VENDEVILLE Jean Eudes

(57) Abstract :
The present invention relates to microcapsules containing an oxidizable active and a process for preparing the same.

No. of Pages : 42 No. of Claims : 20

(12) PATENT APPLICATION PUBLICATION
(19) INDIA
(22) Date of filing of Application :12/01/2012
(21) Application No.345/DELNP/2012 A
(43) Publication Date : 08/05/2015

(54) Title of the invention : METHODS AND COMPOSITIONS FOR IMPROVING SUGAR TRANSPORT, MIXED SUGAR FERMENTATION, AND PRODUCTION OF BIOFUELS

(51) International classification :C12N 15/87
(31) Priority Document No :61/271,833
(32) Priority Date :24/07/2009
(33) Name of priority country :U.S.A.
(86) International Application No :PCT/US2010/043279
Filing Date :26/07/2010
(87) International Publication No :WO 2010/011796
(61) Patent of Addition to Application Number :NA
Filing Date :NA
(62) Divisional to Application Number :NA
Filing Date :NA

(71)**Name of Applicant :**
1)THE REGENTS OF THE UNIVERSITY OF CALIFORNIA
Address of Applicant :OFFICE OF TECHNOLOGY TRANSFER, 1111 FRANKLIN STREET, 5TH FLOOR, OAKLAND, CALIFORNIA 94607-5200 UNITED STATES OF AMERICA
2)THE BOARD OF TRUSTEES OF THE UNIVERSITY OF ILLINOIS
3)BP CORPORATION NORTH AMERICA INC.
4)GALAZKA JONATHAN M.
(72)**Name of Inventor :**
1)GLASS, N. LOUISE
2)TIAN, CHAOGUANG
3)BEESON, WILLIAM, T.
4)ZHAO, HUIMIN
5)DU, JING
6)CHOI, JIN HO
7)DOUDNA CATE, JANES, H.
8)GALAZKA, JONATHAN M.
9)HA, SUK JIN
10)KIM, SOON RIN
11)LI, SIJIN
12)SU, JIANPING
13)YANG, XIAOMIN
14)JIN, YOUG-SU

(57) Abstract :
The present disclosure relates to host cells containing a recombinant polynucleotide encoding a polypeptide where the polypeptide transports cellodextrin into the cell. The present disclosure further relates to methods of increasing transport of cellodextrin into a cell, methods of increasing growth of a cell on a medium containing cellodextrin, methods of co-fermenting cellulose-derived and hemicellulose-derived sugars, and methods of making hydrocarbons or hydrocarbon derivatives by providing a host cell containing a recombinant polynucleotide encoding a polypeptide where the polypeptide transports cellodextrin into the cell. The present disclosure relates to host cells containing a recombinant polynucleotide encoding a polypeptide where the polypeptide transports a pentose into the cell, methods of increasing transport of a pentose into a cell, methods of increasing growth of a cell on a medium containing pentose sugars, and methods of making hydrocarbons or hydrocarbon derivatives by providing a host cell containing a recombinant polynucleotide encoding a polypeptide where the polypeptide transports a pentose into the cell.

No. of Pages : 403 No. of Claims : 119

(12) PATENT APPLICATION PUBLICATION
(19) INDIA
(22) Date of filing of Application :06/01/2014
(21) Application No.36/DEL/2014 A
(43) Publication Date : 08/05/2015

(54) Title of the invention : DUCT SYSTEM AND METHOD

(51) International classification :G02B
(31) Priority Document No :61/750,103
(32) Priority Date :08/01/2013
(33) Name of priority country :U.S.A.
(86) International Application No :NA
Filing Date :NA
(87) International Publication No : NA
(61) Patent of Addition to Application Number :NA
Filing Date :NA
(62) Divisional to Application Number :NA
Filing Date :NA

(71)**Name of Applicant :**
1)DURA-LINE CORPORATION
Address of Applicant :11400 PARKSIDE DRIVE, SUITE 300, KNOXVILLE, TENNESSEE 37934, U.S.A
(72)**Name of Inventor :**
1)GRIMSLEY, TIMOTHY A.
2)MCCALL, THOMAS

(57) Abstract :
The present inventive concept includes a duct system and method for using same to map and locate ducts. A preferred embodiment of the duct system includes a duct, a plurality of electronic information modules and an oversheath at least partially covering the plurality of information modules and fixing the information modules to the duct. The plurality of information modules are configured to emit a positional signal to enable location of the information modules and associated duct(s) and/or mapping of the duct system.

No. of Pages : 15 No. of Claims : 10

(12) PATENT APPLICATION PUBLICATION
(19) INDIA
(22) Date of filing of Application :09/10/2014
(21) Application No.8451/DELNP/2014 A
(43) Publication Date : 08/05/2015

(54) Title of the invention : BORONIC ACID CONJUGATES OF OLIGONUCLEOTIDE ANALOGUES

(51) International classification :C12P19/34
(31) Priority Document No :61/613385
(32) Priority Date :20/03/2012
(33) Name of priority country :U.S.A.
(86) International Application No :PCT/US2013/029684
Filing Date :07/03/2013
(87) International Publication No :WO 2013/142087
(61) Patent of Addition to Application Number :NA
Filing Date :NA
(62) Divisional to Application Number :NA
Filing Date :NA

(71)**Name of Applicant :**
1)SAREPTA THERAPEUTICS INC.
Address of Applicant :4575 SW Research Way Suite 200 Corvallis Oregon 97333 U.S.A.
(72)**Name of Inventor :**
1)HANSON Gunnar J.

(57) Abstract :
Oligonucleotide analogues comprising boronic acid and/or boronic ester moieties are provided. The disclosed compounds are useful for the treatment of diseases where inhibition of protein expression or correction of aberrant mRNA splice products produces beneficial therapeutic effects.

No. of Pages : 74 No. of Claims : 24

(12) PATENT APPLICATION PUBLICATION
(19) INDIA
(22) Date of filing of Application :09/10/2014
(21) Application No.8452/DELNP/2014 A
(43) Publication Date : 08/05/2015

(54) Title of the invention : COST EFFECTIVE FERRITIC STAINLESS STEEL

(51) International classification :C22C38/20,C21C5/00,C22C38/22
(31) Priority Document No :61/619048
(32) Priority Date :02/04/2012
(33) Name of priority country :U.S.A.
(86) International Application No :PCT/US2013/034940
Filing Date :02/04/2013
(87) International Publication No :WO 2013/151992
(61) Patent of Addition to Application Number :NA
Filing Date :NA
(62) Divisional to Application Number :NA
Filing Date :NA

(71)**Name of Applicant :**
1)AK STEEL PROPERTIES INC.
Address of Applicant :9227 Centre Pointe Drive West Chester OH 45069 U.S.A.
(72)**Name of Inventor :**
1)DOUTHETT Joseph A.
2)CRAYCRAFT Shannon K.

(57) Abstract :
A cost effective ferritic stainless steel exhibits improved corrosion resistance comparable to that observed on Type 304L steel. The ferritic stainless steel is substantially nickel free dual stabilized with titanium and columbium and contains chromium copper and molybdenum.

No. of Pages : 29 No. of Claims : 17

(12) PATENT APPLICATION PUBLICATION
(19) INDIA
(22) Date of filing of Application :09/10/2014
(21) Application No.8453/DELNP/2014 A
(43) Publication Date : 08/05/2015

(54) Title of the invention : INTERNAL COMBUSTION ENGINE USING A WATER BASED MIXTURE AS FUEL AND METHOD FOR OPERATING THE SAME

(51) International classification :F02D19/08
(31) Priority Document No :61/613550
(32) Priority Date :21/03/2012
(33) Name of priority country :U.S.A.
(86) International Application No :PCT/US2013/033100
Filing Date :20/03/2013
(87) International Publication No :WO 2013/142575
(61) Patent of Addition to Application Number :NA
Filing Date :NA
(62) Divisional to Application Number :NA
Filing Date :NA

(71)**Name of Applicant :**
1)MAYMAAN RESEARCH LLC
Address of Applicant :3700 N. 29th Ave.; #202 Hollywood Florida 33020 U.S.A.
(72)**Name of Inventor :**
1)SHMUELI Yehuda
2)SHMUELI Eitan
3)SHMUELI Doron

(57) Abstract :
An internal combustion engine includes a cylinder with a combustion chamber and a piston selectively changing the volume of the combustion chamber. The combustion chamber receives a mixture of air hydrogen and a liquid fuel consisting essentially of water and a flammable preferably non fossil substance. The contents of the combustion chamber are ignited generating power.

No. of Pages : 24 No. of Claims : 24

(12) PATENT APPLICATION PUBLICATION
(19) INDIA
(22) Date of filing of Application :08/10/2014
(21) Application No.8368/DELNP/2014 A
(43) Publication Date : 08/05/2015

(54) Title of the invention : THIOPHENE BASED COMPOUNDS EXHIBITING NOX4 INHIBITORY ACTIVITY AND USE THEREOF IN THERAPY

(51) International classification :A61K31/381,A61P3/10,A61P9/10
(31) Priority Document No :61/611684
(32) Priority Date :16/03/2012
(33) Name of priority country :U.S.A.
(86) International Application No :PCT/EP2013/055218
Filing Date :14/03/2013
(87) International Publication No :WO 2013/135803
(61) Patent of Addition to Application Number :NA
Filing Date :NA
(62) Divisional to Application Number :NA
Filing Date :NA

(71)**Name of Applicant :**
1)GLUCOX BIOTECH AB
Address of Applicant :c/o Wilcke Wollmar Yxkullsgatan 7 S 11850 Stockholm Sweden
(72)**Name of Inventor :**
1)WILCKE Mona
2)WALUM Erik
3)WIKSTR–M Per

(57) Abstract :
A compound of formula (I) for use in the treatment of a condition or disorder associated with nicotinamide adenine dinucleotide phosphate oxidase.

No. of Pages : 53 No. of Claims : 16

(12) PATENT APPLICATION PUBLICATION
(19) INDIA
(22) Date of filing of Application :08/10/2014
(21) Application No.8369/DELNP/2014 A
(43) Publication Date : 08/05/2015

(54) Title of the invention : ORGANIC COMPOUNDS

(51) International classification :C07C49/04,C07C49/203
(31) Priority Document No :1208566.8
(32) Priority Date :16/05/2012
(33) Name of priority country :U.K.
(86) International Application No :PCT/EP2013/055364
Filing Date :15/03/2013
(87) International Publication No :WO 2013/170976
(61) Patent of Addition to Application Number :NA
Filing Date :NA
(62) Divisional to Application Number :NA
Filing Date :NA

(71)**Name of Applicant :**
1)GIVAUDAN SA
Address of Applicant :Chemin de la Perfumerie 5 CH 1214 Vernier Switzerland
(72)**Name of Inventor :**
1)KRAFT Philip

(57) Abstract :
Branched optionally unsaturated ketones particularly useful in providing typical and characteristic orris facets to perfume compositions

No. of Pages : 26 No. of Claims : 9

(12) PATENT APPLICATION PUBLICATION
(19) INDIA
(22) Date of filing of Application :09/10/2014
(21) Application No.8434/DELNP/2014 A
(43) Publication Date : 08/05/2015

(54) Title of the invention : BEATER FOR DUST AFFECTED TUBE WALLS

(51) International classification :F28G7/00,B06B1/18
(31) Priority Document No :10 2012 005 804.7
(32) Priority Date :21/03/2012
(33) Name of priority country :Germany
(86) International Application No :PCT/EP2013/054937
Filing Date :12/03/2013
(87) International Publication No :WO 2013/139639
(61) Patent of Addition to Application Number :NA
Filing Date :NA
(62) Divisional to Application Number :NA
Filing Date :NA

(71)**Name of Applicant :**
1)THYSSENKRUPP INDUSTRIAL SOLUTIONS AG
Address of Applicant :ThyssenKrupp Allee 1 45143 Essen Germany
(72)**Name of Inventor :**
1)SEMRAU Lothar
2)LANGENKAMP Guido

(57) Abstract :
With a device (1) for introducing beating or pulsed movements into tube walls within a pressure vessel (3) wherein a first ram (7) imparting the beating pulse to the tube wall (2) passes through the pressure vessel wall and is guided into a pressurized first annular space (15a) which is acted upon by a second ram (6) which is guided in a further tubular chamber (11) it is intended to provide a solution by which the wear of the rammer or ram that acts on the tube wall is compensated over as long a time as possible and effective sealing with respect to the surroundings is ensured. This is achieved by the second ram (6) being provided with at least one first guide (6a) acting upon the inner wall of the tubular chamber (11) in the region of the end of said second ram that makes contact with the first ram (7) and being provided with a second guide (6b) fitted with a sealing element in the region of the end (6c) of said second ram that protrudes from the tubular chamber (11) and by the second ram (6) being enclosed between the two guides (6a 6b) by a gas tightly fixed compensator (20).

No. of Pages : 20 No. of Claims : 10

(12) PATENT APPLICATION PUBLICATION
(19) INDIA
(22) Date of filing of Application :09/10/2014
(21) Application No.8435/DELNP/2014 A
(43) Publication Date : 08/05/2015

(54) Title of the invention : AMORPHOUS ALLOY RIBBON

(51) International classification :C22C45/02,B22D11/00,B22D11/06
(31) Priority Document No :2012058714
(32) Priority Date :15/03/2012
(33) Name of priority country :Japan
(86) International Application No :PCT/JP2013/056355
Filing Date :07/03/2013
(87) International Publication No :WO 2013/137118
(61) Patent of Addition to Application Number :NA
Filing Date :NA
(62) Divisional to Application Number :NA
Filing Date :NA

(71)**Name of Applicant :**
1)HITACHI METALSLTD.
Address of Applicant :2 1Shibaura 1 chomeMinato ku Tokyo 1058614 Japan
(72)**Name of Inventor :**
1)MOTEGI Takayuki
2)AZUMA Daichi
3)ITAGAKI Hajime
4)BIZEN Yoshio

(57) Abstract :
The present invention provides an amorphous alloy thin strip which is composed of Fe Si B C and unavoidable impurities and wherein: the amount of Si is from 8.5 atom% to 9.5 atom% and the amount of B is 10.0 atom% or more but less than 12.0 atom% when the total of Fe Si and B is taken as 100.0 atom%; and the amount of C relative to the above mentioned total of 100.0 atom% is from 0.2 atom% to 0.6 atom%. This amorphous alloy thin strip has a thickness of 10 40 µm and a width of 100 300 mm.

No. of Pages : 19 No. of Claims : 6

(12) PATENT APPLICATION PUBLICATION
(19) INDIA
(22) Date of filing of Application :09/10/2014
(21) Application No.8436/DELNP/2014 A
(43) Publication Date : 08/05/2015

(54) Title of the invention : AMORPHOUS ALLOY RIBBON AND METHOD FOR PRODUCING SAME

(51) International classification	:B22D11/06,B22D11/10,C22C1/00
(31) Priority Document No	:2012058715
(32) Priority Date	:15/03/2012
(33) Name of priority country	:Japan
(86) International Application No	:PCT/JP2013/056354
Filing Date	:07/03/2013
(87) International Publication No	:WO 2013/137117
(61) Patent of Addition to Application Number	:NA
Filing Date	:NA
(62) Divisional to Application Number	:NA
Filing Date	:NA

(71)**Name of Applicant :**
1)HITACHI METALSLTD.
Address of Applicant :2 1Shibaura 1 chomeMinato ku Tokyo 1058614 Japan
(72)**Name of Inventor :**
1)SHIBASAKI Hiroshi
2)MOTEGI Takayuki
3)ITAGAKI Hajime
4)SUNAKAWA Jun
5)BIZEN Yoshio

(57) Abstract :
In the present invention a method for producing an amorphous alloy ribbon is provided said method having a step in which an amorphous alloy ribbon is produced by discharging a molten alloy from an opening in a molten metal nozzle onto the surface of a cooling roll that rotates. The molten metal nozzle has a molten metal channel through the molten alloy flows and the opening of the molten metal nozzle is a rectangular opening at one end of the molten metal channel. The maximum height (Rz(t)) of a surface (t) parallel to the direction of flow of the molten alloy and the short side direction of the opening among the walls of the molten metal channel is not more than 10.5 µm.

No. of Pages : 25 No. of Claims : 10

(12) PATENT APPLICATION PUBLICATION
(19) INDIA
(22) Date of filing of Application :10/10/2014
(21) Application No.8463/DELNP/2014 A
(43) Publication Date : 08/05/2015

(54) Title of the invention : SAMPLE INTRODUCTION SYSTEM

(51) International classification :G01N33/543
(31) Priority Document No :61/642820
(32) Priority Date :04/05/2012
(33) Name of priority country :U.S.A.
(86) International Application No :PCT/US2013/039002
Filing Date :01/05/2013
(87) International Publication No :WO 2013/166106
(61) Patent of Addition to Application Number :NA
Filing Date :NA
(62) Divisional to Application Number :NA
Filing Date :NA

(71)**Name of Applicant :**
1)SIEMENS HEALTHCARE DIAGNOSTICS INC.
Address of Applicant :511 Benedict Ave. Tarrytown NY 10591 U.S.A.
(72)**Name of Inventor :**
1)RASMUSSEN James E.

(57) Abstract :
A sample port system/device associated with a fluid collection device is provided and is configured to receive fluid containing devices of varying diameters. A method of improving the work flow and safety involved in acquiring and/or testing fluid samples using such sample port system/device is also provided.

No. of Pages : 43 No. of Claims : 69

(12) PATENT APPLICATION PUBLICATION
(19) INDIA
(22) Date of filing of Application :10/10/2014
(21) Application No.8466/DELNP/2014 A
(43) Publication Date : 08/05/2015

(54) Title of the invention : GRAPHENE BASED FILTER

(51) International classification :C02F1/44
(31) Priority Document No :61/611067
(32) Priority Date :15/03/2012
(33) Name of priority country :U.S.A.
(86) International Application No :PCT/US2013/031963
Filing Date :15/03/2013
(87) International Publication No :WO 2013/138698
(61) Patent of Addition to Application Number :NA
Filing Date :NA
(62) Divisional to Application Number :NA
Filing Date :NA

(71)**Name of Applicant :**
1)MASSACHUSETTS INSTITUTE OF TECHNOLOGY
Address of Applicant :77 Massachusetts Avenue Cambridge MA 02139 U.S.A.
2)KING FAHD UNIVERSITY OF PETROLEUM & MINERALS
(72)**Name of Inventor :**
1)KARNIK Rohit N.
2)OHERN Sean C.
3)BOUTILIER Michael S.H.
4)STEWART Cameron A.
5)AU Harold S.
6)HADJICONSTANTINOU Nicolas G.
7)LAOUI Tahar
8)ATIEH Muataz A.

(57) Abstract :
Two dimensional material based filters their method of manufacture and their use are disclosed. The filters may include at least one active layer disposed on a porous substrate. The at least one active layer may include intrinsic and/or intentional formed pores. In some embodiments the flow resistance of the porous substrate may be selected to limit flow through defects and intrinsic pores in the at least one active layer.

No. of Pages : 51 No. of Claims : 36

(12) PATENT APPLICATION PUBLICATION
(19) INDIA
(22) Date of filing of Application :10/10/2014
(21) Application No.8478/DELNP/2014 A
(43) Publication Date : 08/05/2015

(54) Title of the invention : ELECTRIC MOTOR

(51) International classification :H02K3/50,H02K1/18,H02K3/18
(31) Priority Document No :2012259868
(32) Priority Date :28/11/2012
(33) Name of priority country :Japan
(86) International Application No :PCT/JP2013/077512
Filing Date :09/10/2013
(87) International Publication No:WO 2014/083947
(61) Patent of Addition to Application Number :NA
Filing Date :NA
(62) Divisional to Application Number :NA
Filing Date :NA

(71)**Name of Applicant :**
1)MITSUBA CORPORATION
Address of Applicant :2681 Hirosawa cho 1 chome Kiryu shi Gunma 3768555 Japan
(72)**Name of Inventor :**
1)MIYAKI Atsushi
2)YAMAMOTO Tsutomu
3)SATO Masanao
4)TANABE Takuto

(57) Abstract :
This electric motor comprises: a stator (3) formed by coupling a plurality of divided cores (61) each having one tooth portion (64); a small coil (81) formed by winding a winding wire (12) around each tooth portion (64) and having a three phase structure; and three phase coils formed in such a way that ends of the small coils (81) adjacent in a circumferential direction are connected to or continuously joined to each other and the small coils (81) are connected in series to form a small coil group and further two of the small coil groups are electrically connected in parallel. If the number of the small coils (81) forming the small coil group and connected in series is denoted by TN and the number of the divided cores (61) is denoted by CN TN and CN are set so as to satisfy the relationship CN = 6 — TN. One end of a harness (50) is connected to one end of each of the phase coils which are connected in a delta configuration and the other end of the harness (50) is led out to the outside of the stator.

No. of Pages : 34 No. of Claims : 4

(12) PATENT APPLICATION PUBLICATION
(19) INDIA
(22) Date of filing of Application :10/10/2014
(21) Application No.8479/DELNP/2014 A
(43) Publication Date : 08/05/2015

(54) Title of the invention : RUBBER COMPOSITIONS

(51) International classification :C08K5/205,C08L21/00,B60C1/00
(31) Priority Document No :12165832.2
(32) Priority Date :27/04/2012
(33) Name of priority country :EPO
(86) International Application No :PCT/EP2013/058828
Filing Date :28/04/2013
(87) International Publication No :WO 2013/160482
(61) Patent of Addition to Application Number :NA
Filing Date :NA
(62) Divisional to Application Number :NA
Filing Date :NA

(71)**Name of Applicant :**
1)ALLNEX GERMANY GMBH
Address of Applicant :Kasteler Strasse 45 65203 Wiesbaden Germany
(72)**Name of Inventor :**
1)SCH„FER Ralph

(57) Abstract :
The invention relates to a rubber composition comprising a rubber and a processing additive wherein the processing additive is a functional reactive diluent having at least one functional group in the molecule which is not an olefinic unsaturation to a process of compounding such rubber compositions and to the use thereof.

No. of Pages : 20 No. of Claims : 15

(12) PATENT APPLICATION PUBLICATION
(21) Application No.8387/DELNP/2014 A
(19) INDIA
(22) Date of filing of Application :08/10/2014
(43) Publication Date : 08/05/2015

(54) Title of the invention : OPTICAL SYSTEM OPTICAL DEVICE AND METHOD FOR MANUFACTURING OPTICAL SYSTEM

(51) International classification :G02B13/04
(31) Priority Document No :2012060985
(32) Priority Date :16/03/2012
(33) Name of priority country :Japan
(86) International Application No :PCT/JP2013/000932
Filing Date :20/02/2013
(87) International Publication No :WO 2013/136670
(61) Patent of Addition to Application Number :NA
Filing Date :NA
(62) Divisional to Application Number :NA
Filing Date :NA

(71)**Name of Applicant :**
1)NIKON CORPORATION
Address of Applicant :12 1 Yurakucho 1 chome Chiyoda ku Tokyo 1008331 Japan
(72)**Name of Inventor :**
1)KOIDA Keigo

(57) Abstract :
An optical system includes a positive first lens group (G1) an aperture stop (S) and a second lens group (G2) which are arranged in that order from the object side. The first lens group (G1) includes a negative lens component (L1) a positive lens component (L2) and a first lens component (L3 L4) in which an image side surface has a concave surface facing the aperture stop (S) which are arranged in that order from the object side. The second lens group (G2) includes a second lens component (L5 L6) in which an object side surface has a concave surface facing the aperture stop (S) and a positive lens component (L8) arranged nearest to the image side which are arranged in that order from the object side. The first lens component (L3 L4) and the second lens component (L5 L6) are arranged opposite each other sandwiching the aperture stop (S) and satisfy the following conditional expressions (1) and (2): $1.5 < fG1/f < 2.6$ ⋯(1) $2.1 < TL/f < 3.1$ ⋯(2) Where fG1 is the focal length of the first lens group (G1); f is the focal length of the entire optical system (WL); TL is the distance of the optical axis from the optical surface nearest to the object to the optical surface nearest to the image.

No. of Pages : 45 No. of Claims : 9

(12) PATENT APPLICATION PUBLICATION
(19) INDIA
(22) Date of filing of Application :08/10/2014
(21) Application No.8388/DELNP/2014 A
(43) Publication Date : 08/05/2015

(54) Title of the invention : IMAGE PICKUP ELEMENT AND IMAGE PICKUP DEVICE

(51) International classification :H04N5/353,H01L27/14,H01L27/146
(31) Priority Document No :2012082158
(32) Priority Date :30/03/2012
(33) Name of priority country :Japan
(86) International Application No :PCT/JP2013/002119
Filing Date :28/03/2013
(87) International Publication No :WO 2013/145753
(61) Patent of Addition to Application Number :NA
Filing Date :NA
(62) Divisional to Application Number :NA
Filing Date :NA

(71)**Name of Applicant :**
1)NIKON CORPORATION
Address of Applicant :12 1 Yurakucho 1 chome Chiyoda ku Tokyo 1008331 Japan
(72)**Name of Inventor :**
1)TSUNAI Shiro
2)MURATA Hironobu

(57) Abstract :
An image pickup element is provided with: image pickup sections forming a plurality of pixel groups: said plurality of pixels output pixel signals responsive to incident light and receive incident light corresponding to mutually different items of image information; a control section that controls for each group of pixels the charge accumulation time onto the aforementioned plurality of pixels included in the aforementioned pixel groups; and reading sections provided for each aforementioned pixel group that read the aforementioned pixel signals from the aforementioned plurality of pixels included in the aforementioned pixel groups.

No. of Pages : 47 No. of Claims : 13

(12) PATENT APPLICATION PUBLICATION
(19) INDIA
(22) Date of filing of Application :08/10/2014
(21) Application No.8389/DELNP/2014 A
(43) Publication Date : 08/05/2015

(54) Title of the invention : MEDIA COMPOSITION

(51) International classification :B41M5/44,B41M5/52,C08J7/04
(31) Priority Document No :NA
(32) Priority Date :NA
(33) Name of priority country :NA
(86) International Application No:PCT/US2012/033183
Filing Date :12/04/2012
(87) International Publication No :WO 2013/154559
(61) Patent of Addition to Application Number :NA
Filing Date :NA
(62) Divisional to Application Number :NA
Filing Date :NA

(71)**Name of Applicant :**
1)HEWLETT PACKARD DEVELOPMENT COMPANY L.P.
Address of Applicant :11445 Compaq Center Drive West Houston Texas 77070 U.S.A.
(72)**Name of Inventor :**
1)NIU Bor Jiunn
2)CHEN Haigang
3)UNDERWOOD Lisa A.

(57) Abstract :
Described herein is a media composition. The media composition includes a substrate and an ink receiving layer that includes binder that includes an ethylene vinyl alcohol co polymer with a glass transition temperature of 75 degrees Celsius or less a melting point temperature of 175 degrees Celsius or less and/or a crystallization temperature of 150 degrees Celsius or less. The ink receiving layer can be applied to a substrate using extrusion techniques.

No. of Pages : 19 No. of Claims : 15

(12) PATENT APPLICATION PUBLICATION
(21) Application No.8437/DELNP/2014 A
(19) INDIA
(22) Date of filing of Application :09/10/2014
(43) Publication Date : 08/05/2015

(54) Title of the invention : DETERMINING STANDARD OPERATIONAL VALUE FOR DELAY TIME OF A RADIOGRAPHIC SYSTEM

(51) International classification :A61B6/00
(31) Priority Document No :BE201200268
(32) Priority Date :23/04/2012
(33) Name of priority country :Belgium
(86) International Application No :PCT/EP2013/058272
Filing Date :22/04/2013
(87) International Publication No :WO 2013/160235
(61) Patent of Addition to Application Number :NA
Filing Date :NA
(62) Divisional to Application Number :NA
Filing Date :NA

(71)**Name of Applicant :**
1)AGFA HEALTHCARE
Address of Applicant :IP Department 3802 Septestraat 27 B Mortsel 2640 Belgium
(72)**Name of Inventor :**
1)EXELMANS Walter
2)PANDELAERS Patrick
3)LAMBRECHTS Patrick

(57) Abstract :
The invention relates to a method for the determination of the delay time of a radiographic generator and to the setting of a standard value for such delay time. According to the method it is determined by a series of decreasing chosen values for the delay time whether a signal for the confirmation of the start of the radiographic exposure is rendered by the radiographic generator. The last value of the chosen delay time whereby still such a confirmation signal is rendered is retained as standard operational value for the delay time of the radiographic system.

No. of Pages : 28 No. of Claims : 7

(12) PATENT APPLICATION PUBLICATION
(19) INDIA
(22) Date of filing of Application :09/10/2014
(21) Application No.8438/DELNP/2014 A
(43) Publication Date : 08/05/2015

(54) Title of the invention : A CAPSULE HOLDER FOR A BEVERAGE PREPARATION MACHINE

(51) International classification :A47J31/36
(31) Priority Document No :12165363.8
(32) Priority Date :24/04/2012
(33) Name of priority country :EPO
(86) International Application No :PCT/EP2013/057311
Filing Date :08/04/2013
(87) International Publication No :WO 2013/160091
(61) Patent of Addition to Application Number :NA
Filing Date :NA
(62) Divisional to Application Number :NA
Filing Date :NA

(71)**Name of Applicant :**
1)NESTEC S.A.
Address of Applicant :Av. Nestl 55 CH 1800 Vevey Switzerland
(72)**Name of Inventor :**
1)DOGAN Nihan
2)DOLEAC Frdric

(57) Abstract :
The present invention is directed to a capsule holder (8) for holding a closed capsule (9) in a beverage preparation machine (1) said capsule containing a beverage precursor ingredient said machine being able to inject a fluid under pressure through a wall (11) of said capsule inside the latter such that said fluid and said precursor ingredient mix to make a beverage said capsule holder (8) comprising a cup shaped body (12) adapted to retain and hold said capsule a handle(13) and guide means for removably inserting said capsule holder within said machine wherein said capsule holder (8) further comprises pressure releasing means (15) for releasing fluid pressure inside said capsule.

No. of Pages : 28 No. of Claims : 10

(12) PATENT APPLICATION PUBLICATION
(21) Application No.8439/DELNP/2014 A
(19) INDIA
(22) Date of filing of Application :09/10/2014
(43) Publication Date : 08/05/2015

(54) Title of the invention : METHOD FOR SCREENING ANTICANCER DRUGS AND ANTICANCER DRUG THAT INDUCES CELL DEATH AND USES SUBSTANCE THAT INCREASES GRANZYME M ACTIVITY AS ACTIVE INGREDIENT

(51) International classification	:C12Q1/37,A61K31/7042,A61K33/24
(31) Priority Document No	:2012057707
(32) Priority Date	:14/03/2012
(33) Name of priority country	:Japan
(86) International Application No	:PCT/JP2013/057032
Filing Date	:13/03/2013
(87) International Publication No	:WO 2013/137328
(61) Patent of Addition to Application Number	:NA
Filing Date	:NA
(62) Divisional to Application Number	:NA
Filing Date	:NA

(71)**Name of Applicant :**
1)LSIP LLC
Address of Applicant :7 12 Marunouchi 1 chome Chiyoda ku Tokyo 1000005 Japan
(72)**Name of Inventor :**
1)KUBOTA Shunichiro

(57) Abstract :
The purpose of the present invention is to provide a method for screening anticancer drugs that use novel treatment mechanisms and an anticancer drug that induces cell death and uses a substance that increases the activity of granzyme M as an active ingredient. This method for screening anticancer drugs comprises: a step for administering test substances to cancer cells; a step for detecting the activity of granzyme M in which cancer cells are expressed and selecting test substances for which an increase in activity has been verified; and/or a step for detecting the presence or absence of cancer cell death induced by the activation of granzyme M in which cancer cells are expressed and selecting test substances for which cell death has been verified.

No. of Pages : 30 No. of Claims : 10

(12) PATENT APPLICATION PUBLICATION
(19) INDIA
(22) Date of filing of Application :09/10/2014
(21) Application No.8440/DELNP/2014 A
(43) Publication Date : 08/05/2015

(54) Title of the invention : NOVEL METHODS AND COMPOSITIONS FOR TREATMENT OF DISEASE

(51) International classification :A61K36/23,A61K36/28,A61K36/35
(31) Priority Document No :61/610480
(32) Priority Date :14/03/2012
(33) Name of priority country :U.S.A.
(86) International Application No :PCT/IB2013/051970
Filing Date :13/03/2013
(87) International Publication No :WO 2013/136270
(61) Patent of Addition to Application Number :NA
Filing Date :NA
(62) Divisional to Application Number :NA
Filing Date :NA

(71)**Name of Applicant :**
1)IZUN PHARMACEUTICALS LTD.
Address of Applicant :POB 45088 5 Kiryat HaMada Street Har Hotzvim 91450 Jerusalem Israel
(72)**Name of Inventor :**
1)ROSENBLUH Amy Debra
2)NUSSBAUM Gabriel Jay
3)ROTMAN Avner

(57) Abstract :
An aspect of embodiments of the invention relates to providing novel therapeutic compositions comprising herbal extracts of the plant species Sambucus nigra Echinacea purpurea and Centella asiatica. The compositions exhibit increased therapeutic activity for treatment of various inflammatory diseases in particular inflammatory diseases of mucosa or skin relative to previously identified compositions. In addition the compositions exhibit increased solubility relative to previously identified compositions. In an embodiment of the invention the ratio of Sambucus nigra: Echinacea purpurea: Centella asiatica is 7:1:2. An embodiment of the invention provides methods for preparing an aqueous therapeutic composition comprising extracts of the aforementioned plant species using at least two extractions.

No. of Pages : 28 No. of Claims : 26

(12) PATENT APPLICATION PUBLICATION
(19) INDIA
(22) Date of filing of Application :11/01/2012
(21) Application No.99/DEL/2012 A
(43) Publication Date : 08/05/2015

(54) Title of the invention : A METHOD AND A DEVICE FOR PESTICIDE DETECTION

(51) International classification :B61G
(31) Priority Document No :201110020436.3
(32) Priority Date :18/01/2011
(33) Name of priority country :China
(86) International Application No :NA
Filing Date :NA
(87) International Publication No :NA
(61) Patent of Addition to Application Number :NA
Filing Date :NA
(62) Divisional to Application Number :NA
Filing Date :NA

(71)**Name of Applicant :**
1)SONY CORPORATION
Address of Applicant :1-7-1 KONAN, MINATO-KU, TOKYO 108-0075, JAPAN
(72)**Name of Inventor :**
1)NING DING
2)HISASHI KAJIURA
3)YONGMING LI

(57) Abstract :
The invention relates to a method and a device for pesticide detection using cholinesterase. Particularity, the invention relates to a new pesticide detection method based on magnetic nanoparticles, immobilized withon which cholinesterase is immobilized, wherein the magnetic nanoparticles work serve as carriers to collect the cholinesterase in a solution. Furthermore, the invention relates to a detector for pesticide detection that adopts employs the above method.

No. of Pages : 54 No. of Claims : 48

(12) PATENT APPLICATION PUBLICATION
(21) Application No.3224/DEL/2013 A
(19) INDIA
(22) Date of filing of Application :31/10/2013
(43) Publication Date : 08/05/2015

(54) Title of the invention : NOVEL ADHESIVE TYPE BALANCE WEIGHT FOR ALLOY WHEEL OF VEHICLE

(51) International classification	:G01G	(71)**Name of Applicant :**
(31) Priority Document No	:NA	**1)MARUTI SUZUKI INDIA LIMITED**
(32) Priority Date	:NA	Address of Applicant :1, NELSON MANDELA ROAD,
(33) Name of priority country	:NA	VASANT KUNJ, NEW DELHI-110070, INDIA. Delhi India
(86) International Application No	:NA	**2)BHARAT BALANCING WEIGHTS & CO.**
Filing Date	:NA	(72)**Name of Inventor :**
(87) International Publication No	: NA	**1)SHRIPAD S PARDIKAR**
(61) Patent of Addition to Application Number	:NA	**2)AMRITASHU BARDHAN**
Filing Date	:NA	**3)RAKESH KHANGER**
(62) Divisional to Application Number	:NA	**4)GANPATHI SUBRAMANIAN**
Filing Date	:NA	**5)A. MAHESHKUMAR**

(57) Abstract :
This invention relates to novel adhesive type balance weight for alloy wheel of vehicle comprising of a plurality of buttons connected to each other by means of a bridge wherein side surface of each button is tapered, which together form recession slot between the buttons provided on a double sided tape for pasting in wheel rim. It is associated with the following advantageous features:- - Eco friendly steel adhesive weights for mass production. - Easily bent like lead adhesive weights. - Adhesive weights for individual grammage. - Grammage determination at the centre making it easier for the operator to locate the weight appropriately at the centre of wheel rim. - Suitably softened for easy bending. - Wing flat buttons improves the aesthetic of the product and helps in achieving close grammage tolerance. - Compact. - Complete bonding of adhesive in the wheel rim. - Requirement of lesser pressure (air or manual) while pressing in the wheel rim. - Cost effective.

No. of Pages : 22 No. of Claims : 10

(12) PATENT APPLICATION PUBLICATION
(19) INDIA
(22) Date of filing of Application :10/10/2014
(21) Application No.8458/DELNP/2014 A
(43) Publication Date : 08/05/2015

(54) Title of the invention : WASH BASIN WITH FOOT WASHING FACILITY

(51) International classification :E03C1/14,E03C1/01
(31) Priority Document No :1204341.0
(32) Priority Date :12/03/2012
(33) Name of priority country :U.K.
(86) International Application No :PCT/GB2013/050597
Filing Date :11/03/2013
(87) International Publication No :WO 2013/136055
(61) Patent of Addition to Application Number :NA
Filing Date :NA
(62) Divisional to Application Number :NA
Filing Date :NA

(71)**Name of Applicant :**
1)AZMI Moin Uzzaman
Address of Applicant :27 Larch Gardens Manchester Lancashire M8 8BJ U.K.
(72)**Name of Inventor :**
1)AZMI Moin Uzzaman

(57) Abstract :
A pedestal wash basin (1) comprising a basin part (3) upon a pedestal part (2) wherein the pedestal part contains a foot washing apparatus (4) for washing a human foot comprising a washing chamber with walls and a ceiling defining a covered hollow (6) dimensioned and arranged for receiving a foot of a user via an inlet opening (5) in a wall positioned for admitting the foot into the hollow. A water outlet (7 8) is attached to the washing chamber at a position from which to output water across the hollow of the washing chamber in a direction to intersect the foot of the user when so admitted via the inlet opening. The pedestal part presents a through opening (3B) in an outwardly presented surface thereof in register with the hollow of the washing chamber permitting access to the hollow for washing the foot of a user.

No. of Pages : 32 No. of Claims : 24

(12) PATENT APPLICATION PUBLICATION
(19) INDIA
(22) Date of filing of Application :10/10/2014
(21) Application No.8459/DELNP/2014 A
(43) Publication Date : 08/05/2015

(54) Title of the invention : METHODS FOR REDUCING ZIRCONIA DEFECTS IN GLASS SHEETS

(51) International classification	:C03B5/16,C03B5/18,C03B5/225
(31) Priority Document No	:13/417750
(32) Priority Date	:12/03/2012
(33) Name of priority country	:U.S.A.
(86) International Application No	:PCT/US2013/029510
Filing Date	:07/03/2013
(87) International Publication No	:WO 2013/138147
(61) Patent of Addition to Application Number	:NA
Filing Date	:NA
(62) Divisional to Application Number	:NA
Filing Date	:NA

(71)**Name of Applicant :**
1)CORNING INCORPORATED
Address of Applicant :1 Riverfront Plaza Corning New York 14831 U.S.A.
(72)**Name of Inventor :**
1)ELLISON Adam James
2)KICZENSKI Timothy James
3)MAURO John Christopher

(57) Abstract :
Methods are disclosed for treating zircon containing forming structures e.g. zircon isopipes with one or more treatment glass compositions in which defect causing reactions between the zircon of the forming structure and molten glass are suppressed at the delivery temperature of the treatment glass. The treatment compositions can be used during start up of a forming structure between runs of the same production glass on a given forming structure and/or when transitioning between runs of two production glasses on a given forming structure. The treatment compositions can be used with production glasses that are ion exchangeable.

No. of Pages : 39 No. of Claims : 20

(12) PATENT APPLICATION PUBLICATION
(19) INDIA
(22) Date of filing of Application :08/10/2014
(21) Application No.8375/DELNP/2014 A
(43) Publication Date : 08/05/2015

(54) Title of the invention : A CONSOLIDATED MERCHANT PROGRAMS SYSTEM

(51) International classification :G06Q30/02
(31) Priority Document No :2012017679
(32) Priority Date :08/03/2012
(33) Name of priority country :Singapore
(86) International Application No :PCT/SG2012/000151
Filing Date :27/04/2012
(87) International Publication No :WO 2013/133763
(61) Patent of Addition to Application Number :NA
Filing Date :NA
(62) Divisional to Application Number :NA
Filing Date :NA

(71)**Name of Applicant :**
1)CHUA Wee Ping
Address of Applicant :192A Rivervale Drive #07 926 Singapore 541192 Singapore
2)TIA Mei Yea
(72)**Name of Inventor :**
1)CHUA Wee Ping
2)TIA Mei Yea

(57) Abstract :
Disclosed is a merchant system comprising at least a merchant node; at least a mobile consumer node; a server; a merchant code generated by the server; a primary consumer code generated by the server and assigned to the consumer as an identity of the consumer; the primary consumer code is downloaded to the consumer node upon signing up for a consumer account on the system. A secondary consumer code containing data of the merchant program enrolled by the consumer and the identity of the consumer; the secondary consumer code is generated through capturing the primary consumer code by the merchant node and sending the primary consumer code and merchant code by the merchant node to the server for processing to generate the secondary consumer code or through capturing the merchant code by the consumer node and sending the merchant code and primary consumer code to the server by the consumer node for processing to generate the secondary consumer code;wherein the secondary consumer code is downloaded to the consumer node when approved.

No. of Pages : 32 No. of Claims : 27

(12) PATENT APPLICATION PUBLICATION
(19) INDIA
(22) Date of filing of Application :08/10/2014
(21) Application No.8376/DELNP/2014 A
(43) Publication Date : 08/05/2015

(54) Title of the invention : HIGH CARBON HOT ROLLED STEEL SHEET HAVING EXCELLENT UNIFORMITY AND METHOD FOR MANUFACTURING SAME

(51) International classification :C22C38/00,C21D9/46,C21D8/02
(31) Priority Document No :1020120037318
(32) Priority Date :10/04/2012
(33) Name of priority country :Republic of Korea
(86) International Application No :PCT/KR2012/011643
Filing Date :27/12/2012
(87) International Publication No :WO 2013/154254
(61) Patent of Addition to Application Number :NA
Filing Date :NA
(62) Divisional to Application Number :NA
Filing Date :NA

(71)**Name of Applicant :**
1)POSCO
Address of Applicant :(Goedong dong) 6261 Donghaean ro Nam gu Pohang si Gyeongsangbuk do 790 300 Republic of Korea
(72)**Name of Inventor :**
1)IM Young Roc
2)JEON Jea Chun
3)LEE Byoung Ho

(57) Abstract :
The present invention relates to a high carbon hot rolled steel sheet having excellent uniformity and to a method for manufacturing same in which the components and the structure of the steel are precisely controlled and manufacturing conditions are adjusted to achieve excellence in uniformity among hot rolled structures and excellence in dimensional accuracy of parts after molding. Furthermore defects do not occur during processing and uniform structure and hardness distribution can be achieved after a final heat treatment.

No. of Pages : 34 No. of Claims : 8

(12) PATENT APPLICATION PUBLICATION
(19) INDIA
(22) Date of filing of Application :08/10/2014
(21) Application No.8377/DELNP/2014 A
(43) Publication Date : 08/05/2015

(54) Title of the invention : AQUEOUS LIQUID BEVERAGE

(51) International classification :A23L2/52,A23L1/05,A23L1/305
(31) Priority Document No :2012085093
(32) Priority Date :04/04/2012
(33) Name of priority country :Japan
(86) International Application No :PCT/JP2013/060173
Filing Date :03/04/2013
(87) International Publication No :WO 2013/151084
(61) Patent of Addition to Application Number :NA
Filing Date :NA
(62) Divisional to Application Number :NA
Filing Date :NA

(71)**Name of Applicant :**
1)TAISHO PHARMACEUTICAL CO. LTD.
Address of Applicant :24 1 Takada 3 chome Toshima ku Tokyo 1708633 Japan
(72)**Name of Inventor :**
1)DOMOTO Takashi

(57) Abstract :
Provided is an aqueous liquid beverage characterized by containing a combination of LM pectin dextrin and amino acids taurine carnitine peptides or protein.

No. of Pages : 17 No. of Claims : 6

(12) PATENT APPLICATION PUBLICATION
(21) Application No.8378/DELNP/2014 A
(19) INDIA
(22) Date of filing of Application :08/10/2014
(43) Publication Date : 08/05/2015

(54) Title of the invention : MARKING DEVICE FOR SWITCHGEAR CABINETS AND OTHER ELECTRICAL EQUIPMENT

(51) International classification :G09F3/20
(31) Priority Document No :10 2012 007 004.7
(32) Priority Date :10/04/2012
(33) Name of priority country :Germany
(86) International Application No :PCT/EP2013/001029
Filing Date :08/04/2013
(87) International Publication No :WO 2013/152844
(61) Patent of Addition to Application Number :NA
Filing Date :NA
(62) Divisional to Application Number :NA
Filing Date :NA

(71)**Name of Applicant :**
1)PHOENIX CONTACT GMBH & CO. KG
Address of Applicant :Flachsmarktstrasse 8 32825 Blomberg Germany
(72)**Name of Inventor :**
1)REIBKE Heinz
2)P–LKER Thomas

(57) Abstract :
Marking device (1) for switchgear cabinets (100) and other electrical equipment comprising a carrier profile (2) and an identification plate (3). The carrier profile (2) is suitable and constructed to receive the identification plate (3). The carrier profile (2) has a rear wall (4) and two lateral retaining walls (5 15) extending forward from the rear wall (4). A support web (6 16) intended for supporting the identification plate (3) and extending transversely to the retaining wall (5 15) is provided on the carrier profile (2). An under insertion guard device (7 17) is provided in order to prevent the identification plate (3) from being inserted under the support web (6 16) during installation.

No. of Pages : 16 No. of Claims : 15

(12) PATENT APPLICATION PUBLICATION
(19) INDIA
(22) Date of filing of Application :09/10/2014
(21) Application No.8417/DELNP/2014 A
(43) Publication Date : 08/05/2015

(54) Title of the invention : MAGNESIUM COMPOSITIONS FOR MODULATING THE PHARMACOKINETICS AND PHARMACODYNAMICS OF INSULIN AND INSULIN ANALOGS AND INJECTION SITE PAIN

(51) International classification :A61K9/00,A61K38/28,A61K47/02
(31) Priority Document No :61/624844
(32) Priority Date :16/04/2012
(33) Name of priority country :U.S.A.
(86) International Application No :PCT/US2013/036742
Filing Date :16/04/2013
(87) International Publication No :WO 2013/158618
(61) Patent of Addition to Application Number :NA
Filing Date :NA
(62) Divisional to Application Number :NA
Filing Date :NA

(71)**Name of Applicant :**
1)BIODEL INC.
Address of Applicant :100 Saw Mill Road Danbury CT 06810 U.S.A.
(72)**Name of Inventor :**
1)POHL Roderike
2)HAUSER Robert
3)LI Ming
4)WILSON Bryan R.

(57) Abstract :
Compositions and methods for modulating injection site pain associated with rapid acting injectable insulin formulations have been developed for subcutaneous injection. The formulations contain insulin in combination with a zinc chelator such as ethylenediaminetetraacetic acid (EDTA) a dissolution/stabilization agent such as citric acid a magnesium salt and optionally additional excipients. New presentations include rapid acting concentrated insulin formulations and a way to enhance the absorption of commercially available rapid acting analog formulations by mixing them with a vial containing dry powder excipients that accelerate their absorption. Devices for mixing excipient and insulin together at the time of administration while minimizing residence time of the mixture are also described.

No. of Pages : 53 No. of Claims : 23

(12) PATENT APPLICATION PUBLICATION
(21) Application No.8418/DELNP/2014 A
(19) INDIA
(22) Date of filing of Application :09/10/2014
(43) Publication Date : 08/05/2015

(54) Title of the invention : CARTRIDGE AND SEALING MEMBER

(51) International classification :B41J2/175
(31) Priority Document No :2012117059
(32) Priority Date :23/05/2012
(33) Name of priority country :Japan
(86) International Application No :PCT/JP2013/003267
Filing Date :22/05/2013
(87) International Publication No :WO 2013/175791
(61) Patent of Addition to Application Number :NA
Filing Date :NA
(62) Divisional to Application Number :NA
Filing Date :NA

(71)**Name of Applicant :**
1)SEIKO EPSON CORPORATION
Address of Applicant :4 1 Nishi shinjuku 2 chome Shinjuku ku Tokyo 1630811 Japan
(72)**Name of Inventor :**
1)NOZAWA Izumi
2)MIZUTANI Tadahiro
3)NAKAMURA Hiroyuki
4)KOBAYASHI Atsushi
5)TAKAHASHI Ryota

(57) Abstract :
A cartridge for housing a fluid to be supplied to a fluid ejection device is equipped with a fluid housing unit and a fluid supply unit which is connected to the fluid ejection device. The interior of the fluid supply unit is provided with a fluid discharge unit for discharging the fluid to the fluid ejection device and an opening which connects the exterior of the fluid supply unit and the interior of the fluid supply unit. Furthermore the opening does not contact the side surface of the fluid supply unit.

No. of Pages : 94 No. of Claims : 24

(12) PATENT APPLICATION PUBLICATION
(19) INDIA
(22) Date of filing of Application :09/10/2014
(21) Application No.8419/DELNP/2014 A
(43) Publication Date : 08/05/2015

(54) Title of the invention : VASECTOMY DEVICES AND METHODS

(51) International classification :A61B18/12,A61B18/14,A61B18/18
(31) Priority Document No :13/440618
(32) Priority Date :05/04/2012
(33) Name of priority country :U.S.A.
(86) International Application No :PCT/US2012/042430
Filing Date :14/06/2012
(87) International Publication No :WO 2013/151570
(61) Patent of Addition to Application Number :NA
Filing Date :NA
(62) Divisional to Application Number :NA
Filing Date :NA

(71)**Name of Applicant :**
1)SHINGLETON William Bruce
Address of Applicant :3515 Greenway Drive Evans GA 30809 U.S.A.
(72)**Name of Inventor :**
1)SHINGLETON William Bruce

(57) Abstract :
Devices and methods for cauterizing a tubular vessel are disclosed. A device for cauterizing a tubular vessel can include a hand piece a tip portion provided at an operative end of the hand piece one or more probes extending from the tip portion one or more grasping arms extending beyond the tip portion and movable to grasp a target tissue positioned at or near the tip portion and a power supply configured to supply energy to the one or more probes.

No. of Pages : 16 No. of Claims : 21

(12) PATENT APPLICATION PUBLICATION
(21) Application No.8402/DELNP/2014 A
(19) INDIA
(22) Date of filing of Application :09/10/2014
(43) Publication Date : 08/05/2015

(54) Title of the invention : CONVEYOR CHAIN LINK CONVEYOR CHAIN AND CONVEYOR SYSTEM COMPRISING CONVEYOR CHAIN

(51) International classification :B65G17/44,B65G17/06
(31) Priority Document No :12502738
(32) Priority Date :20/03/2012
(33) Name of priority country :Sweden
(86) International Application No :PCT/SE2013/050308
Filing Date :20/03/2013
(87) International Publication No :WO 2013/141807
(61) Patent of Addition to Application Number :NA
Filing Date :NA
(62) Divisional to Application Number :NA
Filing Date :NA

(71)**Name of Applicant :**
1)FLEXLINK AB
Address of Applicant :Byfogdegatan 11 S 415 50 Gteborg Sweden
(72)**Name of Inventor :**
1)ABBESTAM Gran

(57) Abstract :
A conveyor chain link comprising an upper body having a carrying surface and a lower body having a front end and a rear end where the upper body and the lower body are separate parts where the upper body is provided with a longitudinal slot adapted to cooperate with a protruding tongue on the front end of the lower body with at least one forward bearing surface arranged perpendicular to the centre line of the chain link and adapted to bear on at least one first bearing surface of the lower body with two sideway bearing surfaces adapted to bear on two second bearing surfaces of the lower body and at least one locking means adapted to lock the upper body to the lower body fixedly and irremovably. The advantage of the chain link is that a chain link with different properties for the lower body and the upper body is provided for where the upper and lower bodies are fixedly locked to each other. The invention also concerns a conveyor system comprising a conveyor chain.

No. of Pages : 24 No. of Claims : 15

(12) PATENT APPLICATION PUBLICATION
(19) INDIA
(22) Date of filing of Application :09/10/2014
(21) Application No.8403/DELNP/2014 A
(43) Publication Date : 08/05/2015

(54) Title of the invention : CREATING ENCRYPTED STORAGE VOLUMES

(51) International classification :G06F3/06
(31) Priority Document No :13/444041
(32) Priority Date :11/04/2012
(33) Name of priority country :U.S.A.
(86) International Application No :PCT/US2013/033235
Filing Date :21/03/2013
(87) International Publication No :WO 2013/154804
(61) Patent of Addition to Application Number :NA
Filing Date :NA
(62) Divisional to Application Number :NA
Filing Date :NA

(71)**Name of Applicant :**
1)DELL PRODUCTS L.P.
Address of Applicant :One Dell Way Round Rock TX 78682 U.S.A.
(72)**Name of Inventor :**
1)DOMSCH Matthew L.
2)VEKIARIDES Lazarus J.

(57) Abstract :
Methods and systems for thin provisioned storage. A storage array controller may materialize LUN extents by filling extents with random data only as necessary at materialization time. Encryption software may recognize operation on a thin provisioned LUN having extents that are pre filled and/or re materialized on next use.

No. of Pages : 23 No. of Claims : 18

(12) PATENT APPLICATION PUBLICATION
(21) Application No.8404/DELNP/2014 A
(19) INDIA
(22) Date of filing of Application :09/10/2014
(43) Publication Date : 08/05/2015

(54) Title of the invention : A PROCESS AND SYSTEM FOR DRY RECOVERY OF IRON ORE FINES AND SUPERFINES AND A MAGNETIC SEPARATION UNIT

(51) International classification	:B03C1/247,B03C1/10,B03C1/30	(71)**Name of Applicant :**
(31) Priority Document No	:BR1020120083400	**1)NEW STEEL SOLU‡•ES SUSTENTAVEIS S.A.**
(32) Priority Date	:19/03/2012	Address of Applicant :Av. das Amricas 500 bloco 10 sala 304 Barra da Tijuca CEP 22640 100 Rio de Janeiro RJ Brazil
(33) Name of priority country	:Brazil	(72)**Name of Inventor :**
(86) International Application No	:PCT/BR2013/000075	**1)YAMAMOTO Mauro Fumyo**
Filing Date	:13/03/2013	
(87) International Publication No	:WO 2013/138889	
(61) Patent of Addition to Application Number	:NA	
Filing Date	:NA	
(62) Divisional to Application Number	:NA	
Filing Date	:NA	

(57) Abstract :
The present invention refers to a system and method for the totally dry treatment of iron ore wastes from previous mining operations suitable for both the processing of ore wastes deposited in barrages and wastes stored in piles. The present invention solves the problems of magnetic separation processes that employ the wet and waste dewatering way eliminating the risks which throwing solid wastes into retention barrages bring by a system and method wherein the moisture degree of the ore is reduced by means of a mechanical stir dryer (using natural gas to prevent contamination) which is then sorted into various fractions and finally separated magnetically with the important difference of being an entirely dry process.

No. of Pages : 30 No. of Claims : 11

(12) PATENT APPLICATION PUBLICATION
(19) INDIA
(22) Date of filing of Application :09/10/2014
(21) Application No.8405/DELNP/2014 A
(43) Publication Date : 08/05/2015

(54) Title of the invention : METHOD FOR THE PRODUCTION OF ACRYLIC ACID OR ITS DERIVATIVES

(51) International classification :C08F220/06,A61L15/60,C08L33/02
(31) Priority Document No :61/623054
(32) Priority Date :11/04/2012
(33) Name of priority country :U.S.A.
(86) International Application No :PCT/US2013/036164
Filing Date :11/04/2013
(87) International Publication No :WO 2013/155298
(61) Patent of Addition to Application Number :NA
Filing Date :NA
(62) Divisional to Application Number :NA
Filing Date :NA

(71)**Name of Applicant :**
1)THE PROCTER & GAMBLE COMPANY
Address of Applicant :One Procter & Gamble Plaza Cincinnati Ohio 45202 U.S.A.
(72)**Name of Inventor :**
1)VELASQUEZ Juan Esteban
2)LINGOES Janette Villalobos
3)COLLIAS Dimitris Ioannis
4)GODLEWSKI Jane Ellen

(57) Abstract :
Methods for catalytically dehydrating hydroxypropionic acid hydroxypropionic acid derivatives or mixtures thereof to acrylic acid acrylic acid derivatives or mixtures thereof with high yield and selectivity and without significant conversion to undesired side products such as acetaldehyde propionic acid and acetic acid are provided. The catalysts are mixed monophosphates.

No. of Pages : 32 No. of Claims : 15

(12) PATENT APPLICATION PUBLICATION
(19) INDIA
(22) Date of filing of Application :10/10/2014
(21) Application No.8471/DELNP/2014 A
(43) Publication Date : 08/05/2015

(54) Title of the invention : ELECTROPLATING STEEL SHEET ELECTROPLATED STEEL SHEET AND MANUFACTURING METHOD THEREOF

(51) International classification :C25D5/36,C22C18/00,C22C38/00
(31) Priority Document No :2012092341
(32) Priority Date :13/04/2012
(33) Name of priority country :Japan
(86) International Application No :PCT/JP2013/061064
Filing Date :12/04/2013
(87) International Publication No :WO 2013/154184
(61) Patent of Addition to Application Number :NA
Filing Date :NA
(62) Divisional to Application Number :NA
Filing Date :NA

(71)**Name of Applicant :**
1)NIPPON STEEL & SUMITOMO METAL CORPORATION
Address of Applicant :6 1 Marunouchi 2 chome Chiyoda ku Tokyo 1008071 Japan
(72)**Name of Inventor :**
1)SATO Hironori
2)KUROSAKI Masao
3)FUDA Masahiro
4)SUGIURA Natsuko
5)YAMAGUCHI Yuji

(57) Abstract :
Provided is an electroplating steel sheet which comprises in mass% C: 0.0005 to 0.0050% Si: 0.20 to 1.0% Mn: 0.40 to 2.5% P: 0.05% or less Ti: 0.010 to 0.050% Nb: 0.010 to 0.040% B: 0.0005 to 0.0030% S: 0.02% or less Al: 0.01 to 0.30% N:0.0010 to 0.01% and the remainder including iron and impurities and has a chemical composition in which [Mn]+5[Si] is 2.0 to 7.0 where [Si] is the Si content and [Mn] is the Mn content the sheet having a surface texture wherein in the cross sectional profile of the surface which is obtained by measuring with 0.07 μm interval with respect to the evaluation length of 10 μm or greater the average of a displacement of a measurement point with reference to the moving average of total successive 31 points including prior and next respective 15 points is 0.005 μm to 0.10 μm.

No. of Pages : 39 No. of Claims : 4

(12) PATENT APPLICATION PUBLICATION
(21) Application No.8472/DELNP/2014 A
(19) INDIA
(22) Date of filing of Application :10/10/2014
(43) Publication Date : 08/05/2015

(54) Title of the invention : SOUND DETECTING APPARATUS SOUND DETECTING METHOD SOUND FEATURE VALUE DETECTING APPARATUS SOUND FEATURE VALUE DETECTING METHOD SOUND SECTION DETECTING APPARATUS SOUND SECTION DETECTING METHOD AND PROGRAM

(51) International classification :G06F17/30,G10L25/48,G10L25/18
(31) Priority Document No :2012094395
(32) Priority Date :18/04/2012
(33) Name of priority country :Japan
(86) International Application No :PCT/JP2013/002581
Filing Date :16/04/2013
(87) International Publication No :WO 2013/157254
(61) Patent of Addition to Application Number :NA
Filing Date :NA
(62) Divisional to Application Number :NA
Filing Date :NA

(71)**Name of Applicant :**
1)SONY CORPORATION
Address of Applicant :1 7 1 Konan Minato Ku Tokyo 1080075 Japan
(72)**Name of Inventor :**
1)ABE Mototsugu
2)NISHIGUCHI Masayuki
3)KURATA Yoshinori

(57) Abstract :
There is provided a sound detecting apparatus including: a feature value extracting unit which extracts a feature value per every predetermined time from an input time signal; a feature value maintaining unit which maintains a feature value sequence of a predetermined number of detection target sound items; and a comparison unit which respectively compares a feature value sequence extracted by the feature value extracting unit with a feature value sequence of the maintained predetermined number of detecting target sound items and obtains detection results of the predetermined number of detection target sound items every time the feature value extracting unit newly extracts a feature value wherein the feature value extracting unit includes a time frequency transform unit and a likelihood distribution detecting unit smooths the obtained likelihood distribution in frequency and time directions and extracts a feature value per the predetermined time.

No. of Pages : 59 No. of Claims : 18

(12) PATENT APPLICATION PUBLICATION
(19) INDIA
(22) Date of filing of Application :09/10/2014
(21) Application No.8409/DELNP/2014 A
(43) Publication Date : 08/05/2015

(54) Title of the invention : METHOD FOR PROVIDING A COOLING MEDIUM IN A SECONDARY CIRCUIT

(51) International classification :F28F27/00,F28B9/06,F28D15/00
(31) Priority Document No :12165458.6
(32) Priority Date :25/04/2012
(33) Name of priority country :EPO
(86) International Application No :PCT/EP2013/058377
Filing Date :23/04/2013
(87) International Publication No :WO 2013/160293
(61) Patent of Addition to Application Number :NA
Filing Date :NA
(62) Divisional to Application Number :NA
Filing Date :NA

(71)**Name of Applicant :**
1)BASF SE
Address of Applicant :67056 Ludwigshafen Germany
(72)**Name of Inventor :**
1)KOMPA Raymund
2)F–RSTER Markus
3)WALTER Andreas

(57) Abstract :
Method for providing a cooling medium with regulated feed temperature in a secondary circuit (20) wherein in the secondary circuit (20) the cooling medium absorbs heat from one or more process coolers (22) and subsequently releases heat to primary water in a primary circuit (10) before flowing back to the process coolers (22) characterized in that at least two primary heat exchangers (12 14) are provided for cooling the cooling medium furthermore a bypass line (26) in the secondary circuit (20) branches off downstream of the outlet from the process coolers (22) in order to bypass the primary heat exchangers (12 14) and the regulation of the temperature in the secondary circuit (20) in the feed line to the process coolers (22) is realized through adjustment of the bypass flow.

No. of Pages : 15 No. of Claims : 8

(12) PATENT APPLICATION PUBLICATION
(19) INDIA
(22) Date of filing of Application :09/10/2014
(21) Application No.8410/DELNP/2014 A
(43) Publication Date : 08/05/2015

(54) Title of the invention : HYBRID WASTEWATER TREATMENT

(51) International classification :C02F3/12,C02F3/10
(31) Priority Document No :2008598
(32) Priority Date :03/04/2012
(33) Name of priority country :Netherlands
(86) International Application No :PCT/NL2013/050247
Filing Date :03/04/2013
(87) International Publication No :WO 2013/151434
(61) Patent of Addition to Application Number :NA
Filing Date :NA
(62) Divisional to Application Number :NA
Filing Date :NA

(71)**Name of Applicant :**
1)HASKONINGDHV NEDERLAND B.V.
Address of Applicant :Laan 1914 no 35 NL 3818 EX Amersfoort Netherlands
(72)**Name of Inventor :**
1)PEETERS Tom Wil Theo
2)LU Bin

(57) Abstract :
A process for the biological treatment of wastewater in which the performance of a conventional activated sludge system is improved by adding an aerobic granular biomass system in a hybrid parallel process configuration. Waste biomass and suspended material from the aerobic granular biomass system is introduced into the conventional activated sludge system for this purpose. In the hybrid process configuration the advantages of both systems are combined to produce new advantages while drawbacks of the individual systems are reduced to great extent.

No. of Pages : 23 No. of Claims : 14

(12) PATENT APPLICATION PUBLICATION
(21) Application No.8411/DELNP/2014 A
(19) INDIA
(22) Date of filing of Application :09/10/2014
(43) Publication Date : 08/05/2015

(54) Title of the invention : INTAGLIO PRINTING PLATE COATING APPARATUS

(51) International classification :B41N3/00,C23C14/50,C23C14/16
(31) Priority Document No :12163838.1
(32) Priority Date :12/04/2012
(33) Name of priority country :EPO
(86) International Application No :PCT/IB2013/052923
Filing Date :12/04/2013
(87) International Publication No :WO 2013/153536
(61) Patent of Addition to Application Number :NA
Filing Date :NA
(62) Divisional to Application Number :NA
Filing Date :NA

(71)**Name of Applicant :**
1)KBA NOTASYS SA
Address of Applicant :PO Box 347 55 Avenue du Grey CH 1000 Lausanne 22 Switzerland
(72)**Name of Inventor :**
1)GREMION Fran§ois
2)CLAUDE Laurent

(57) Abstract :
There is described an intaglio printing plate coating apparatus (1) comprising a vacuum chamber (3) having an inner space (30) adapted to receive at least one intaglio printing plate (10) to be coated a vacuum system (4) coupled to the vacuum chamber (3) adapted to create vacuum in the inner space (30) of the vacuum chamber (3) and a physical vapour deposition (PVD) system (5) adapted to perform deposition of wear resistant coating material under vacuum onto an engraved surface (10a) of the intaglio printing plate (10) which physical vapour deposition system (5) includes at least one coating material target (51 52) comprising a source of the wear resistant coating material to be deposited onto the engraved surface (10a) of the intaglio printing plate (10). The vacuum chamber (3) is arranged so that the intaglio printing plate (10) to be coated sits substantially vertically in the inner space (30) of the vacuum chamber (3) with its engraved surface (10a) facing the at least one coating material target (51 52). The intaglio printing plate coating apparatus (1) further comprises a movable carrier (6) located within the inner space (30) of the vacuum chamber (3) and adapted to support and cyclically move the intaglio printing plate (10) in front of and past the at least one coating material target (51 52).

No. of Pages : 34 No. of Claims : 20

(12) PATENT APPLICATION PUBLICATION
(21) Application No.1100/MUM/2013 A
(19) INDIA
(22) Date of filing of Application :25/03/2013
(43) Publication Date : 08/05/2015

(54) Title of the invention : METHOD FOR PIERCING AND STRIPPING OF CLOSELY LOCATED HOLES

(51) International classification :B21D28/34
(31) Priority Document No :NA
(32) Priority Date :NA
(33) Name of priority country :NA
(86) International Application No :NA
Filing Date :NA
(87) International Publication No : NA
(61) Patent of Addition to Application Number :NA
Filing Date :NA
(62) Divisional to Application Number :NA
Filing Date :NA

(71)**Name of Applicant :**
1)LARSEN & TOUBRO LIMITED
Address of Applicant :LARSEN & TOUBRO LIMITED L&T HOUSE, BALLARD ESTATE, MUMBAI-400001, MAHARASHTRA STATE, INDIA
(72)**Name of Inventor :**
1)R. A. PANCHAL
2)ARVINDKUMAR K.S

(57) Abstract :
Disclosed is a press tool assembly for piercing and stripping of closely located holes. The press tool assembly provides for loading single or multiple punches for piercing holes of diameters less than material thickness with very close center distance, at the same station. The press tool assembly provides guidance to the punches at cutting as well as holding/body diameters to strengthen against buckling/high compressive load failures. The press tool assembly provides stripping action is by polyurethane pad construction.

No. of Pages : 13 No. of Claims : 2

(12) PATENT APPLICATION PUBLICATION
(19) INDIA
(22) Date of filing of Application :25/03/2013
(21) Application No.1101/MUM/2013 A
(43) Publication Date : 08/05/2015

(54) Title of the invention : PACKAGING FOR CIRCUIT BREAKERS

(51) International classification :B65D85/00
(31) Priority Document No :NA
(32) Priority Date :NA
(33) Name of priority country :NA
(86) International Application No :NA
Filing Date :NA
(87) International Publication No : NA
(61) Patent of Addition to Application Number :NA
Filing Date :NA
(62) Divisional to Application Number :NA
Filing Date :NA

(71)**Name of Applicant :**
1)LARSEN & TOUBRO LIMITED
Address of Applicant :LARSEN & TOUBRO LIMITED L&T HOUSE, BALLARD ESTATE, P. O. BOX: 278, MUMBAI 400 001, INDIA Maharashtra India
(72)**Name of Inventor :**
1)PARVATHY K
2)PRANAV G. PUJARI
3)DINESH R. KANNADKAR

(57) Abstract :
Disclosed is a kit for packaging of article/device. The kit comprises a base assembly having a pallet for mounting thereon the article/device to be packed, a sheet configured within the pallet for providing ingress protection and cushioning the article/device , and a plurality of locators configured along the boundary of the pallet. Further, the kit comprises a sleeve supported on the plurality of locators. The sleeve forms an enclosure for the article/device. Furthermore, the kit comprises a plurality of stacking blocks supported on the pallet for providing strength to the sleeve and a lid covering the sleeve thereby forming a package.

No. of Pages : 14 No. of Claims : 5

(12) PATENT APPLICATION PUBLICATION
(19) INDIA
(22) Date of filing of Application :29/07/2014
(21) Application No.1523/MUMNP/2014 A
(43) Publication Date : 08/05/2015

(54) Title of the invention : CABLE TYPE SECONDARY BATTERY

(51) International classification :H01M10/058,H01M4/02,H01M4/13
(31) Priority Document No :1020130051562
(32) Priority Date :07/05/2013
(33) Name of priority country :Republic of Korea
(86) International Application No :PCT/KR2014/004043
Filing Date :07/05/2014
(87) International Publication No :WO 2014/182059
(61) Patent of Addition to Application Number :NA
Filing Date :NA
(62) Divisional to Application Number :NA
Filing Date :NA

(71)**Name of Applicant :**
1)LG CHEM LTD.
Address of Applicant :128 Yeoui daero Yeongdeungpo gu Seoul 150 721 Republic of Korea
(72)**Name of Inventor :**
1)KWON Yo Han
2)JUNG Hye Ran
3)KIM Eun Kyung
4)KIM Je Young
5)KIM Hyo Mi

(57) Abstract :
Provided is a cable type secondary battery comprising: an inner electrode; a separation layer encircling the outer surface of the inner electrode for preventing short circuiting of the electrode; and a sheet type outer electrode encircling the separation layer or the inner electrode wound helically therearound.

No. of Pages : 38 No. of Claims : 81

(12) PATENT APPLICATION PUBLICATION
(19) INDIA
(22) Date of filing of Application :29/07/2014
(21) Application No.1524/MUMNP/2014 A
(43) Publication Date : 08/05/2015

(54) Title of the invention : NEEDLE LESS CONNECTOR

(51) International classification :A61M39/02,A61M5/168,A61M39/00
(31) Priority Document No :2012-028449
(32) Priority Date :13/02/2012
(33) Name of priority country :Japan
(86) International Application No :PCT/JP2013/000737
Filing Date :12/02/2013
(87) International Publication No :WO 2013/121769
(61) Patent of Addition to Application Number :NA
Filing Date :NA
(62) Divisional to Application Number :NA
Filing Date :NA

(71)**Name of Applicant :**
1)NIPRO CORPORATION
Address of Applicant :9 3 Honjo nishi 3 chome Kita ku Osaka shi Osaka 5318510 Japan
(72)**Name of Inventor :**
1)SANO Yoshihiko
2)MATSUO Hiroshi
3)SUZUKI Ken

(57) Abstract :
Provided is a novel needle less connector configured so that the back flow of blood or the like can be prevented by a simple structure. A needle less connector (10) has an elastic valve body (14) provided at the front end opening (41) of a medical liquid passage (28) formed in a housing (18). The insertion of a male luer (92) into a slit (62) which is formed in the elastic valve body (14) so as to penetrate therethrough opens the elastic valve body (14) and connects the male luer (92) to the medical liquid passage (28). The front end opening (41) side end surface of the medical liquid passage (28) in the housing (18) is set as a protruding support surface (32) the center portion of which protrudes and which slopes toward the foot. The elastic valve body (14) is superposed on the protruding support body (32) so as to be in close contact therewith. The insertion of the male luer (92) into the slit (62) in the elastic valve body (14) causes the expansion and deformation of the elastic valve body (14) along the protruding support surface (32). Also a flexion section (42) is formed on the sloped surface of the protruding support surface (32). The sloped surface has different tilt angles on the foot portion (34) side relative to the flexion section (42) and on the crest portion (36) side relative to the flexion section (42).

No. of Pages : 30 No. of Claims : 9

(12) PATENT APPLICATION PUBLICATION
(21) Application No.1051/MUMNP/2014 A
(19) INDIA
(22) Date of filing of Application :30/05/2014
(43) Publication Date : 08/05/2015

(54) Title of the invention : GAS MIXER AND GAS MIXING SYSTEM

(51) International classification	:F02M21/04, F02M25/07, F02M35/10	(71)**Name of Applicant :** **1)MTU FRIEDRICHSHAFEN GMBH** Address of Applicant :Maybachplatz 1 88045 Friedrichshafen Germany
(31) Priority Document No	:10 2011 086 321.4	
(32) Priority Date	:14/11/2011	(72)**Name of Inventor :** **1)RAINDL Markus**
(33) Name of priority country	:Germany	
(86) International Application No	:PCT/EP2012/004450	
Filing Date	:25/10/2012	
(87) International Publication No	:WO 2013/072010	
(61) Patent of Addition to Application Number	:NA	
Filing Date	:NA	
(62) Divisional to Application Number	:NA	
Filing Date	:NA	

(57) Abstract :
The invention relates to a: gas mixer (100) for mixing a first gas G1 and a second gas G2 more particularly a combustion air such as an intake air LL and a fuel gas BG preferably for a gas engine (400) in particular a lean gas engine having a multipart gas housing which can be attached to a gas conduit which has: a first outer gas housing part (110) having an inlet for the first gas G1 in a longitudinal axis LA and an inlet for the second gas G2 in a transverse axis QA a second interior gas housing part (120) set into the first gas housing part (110) to form an annular space (11) for a second gas G2 having a mixing space (20) into which the first gas G1 and the second gas G2 can be introduced for mixing to form a gas mixture where the first gas housing part (110) and the second gas housing part (120) and the annular space (11) are aligned along the longitudinal axis LA and the mixing space (20) is aligned cylindrically along the longitudinal axis LA and a mixing device (30) having a plurality of hollow rods (31 32 33 34) is arranged in the mixing space (20) where a hollow space (52) of a hollow rod is in fluid communication on both sides with the annular space (11). According to the invention the number of hollow rods (31 32 33 34) extends transverse to the longitudinal axis LA and transverse to the transverse axis QA and at least one hollow rod has a plurality of openings (26 27) for the second gas G2 so that the hollow space (52) is in fluid communication with the cylindrical mixing space (20).

No. of Pages : 31 No. of Claims : 19

(12) PATENT APPLICATION PUBLICATION
(21) Application No.1161/MUM/2013 A
(19) INDIA
(22) Date of filing of Application :26/03/2013
(43) Publication Date : 08/05/2015

(54) Title of the invention : ACCESSORY MOUNTING ARRANGMENT

(51) International classification	:F02C7/00, F02C7/32
(31) Priority Document No	:NA
(32) Priority Date	:NA
(33) Name of priority country	:NA
(86) International Application No	:NA
Filing Date	:NA
(87) International Publication No	: NA
(61) Patent of Addition to Application Number	:NA
Filing Date	:NA
(62) Divisional to Application Number	:NA
Filing Date	:NA

(71)**Name of Applicant :**
1)TATA MOTORS LIMITED
Address of Applicant :Bombay House, 24 Homi Mody Street, Hutatma Chowk, Mumbai 400 001, Maharashtra, India
(72)**Name of Inventor :**
1)JOSHI ATUL D

(57) Abstract :
The disclosure relates to an accessory mounting arrangement for an engine, the accessory mounting arrangement comprising: a first integrated bracket capable of being mounted on a portion of the engine towards a long member; a supporting bracket adapted to be connected to a second surface of the first integrated bracket and a portion of the engine; and an accessory holding bracket capable of being removably connected to the first integrated bracket such that the accessory holding bracket is positioned substantially perpendicular to a first surface of the first integrated bracket whereby the accessory is in a predefined alignment with the first integrated bracket.

No. of Pages : 18 No. of Claims : 11

(12) PATENT APPLICATION PUBLICATION
(19) INDIA
(22) Date of filing of Application :30/07/2014
(21) Application No.1531/MUMNP/2014 A
(43) Publication Date : 08/05/2015

(54) Title of the invention : CALCIUM AND MAGNESIUM SALTS AS SQUEAKINESS ENHANCERS IN CLEANSING COMPOSITIONS

(51) International classification :A61K8/44,A61Q19/10,A61K8/20
(31) Priority Document No :13/370733
(32) Priority Date :10/02/2012
(33) Name of priority country :U.S.A.
(86) International Application No :PCT/EP2013/052469
Filing Date :07/02/2013
(87) International Publication No :WO 2013/117665
(61) Patent of Addition to Application Number :NA
Filing Date :NA
(62) Divisional to Application Number :NA
Filing Date :NA

(71)**Name of Applicant :**
1)UNILEVER PLC
Address of Applicant :a company registered in England and Wales under company no. 41424 of Unilever House 100 Victoria Embankment London Greater London EC4Y 0DY U.K.
(72)**Name of Inventor :**
1)VETHAMUTHU Martin Swanson
2)MUKHERJEE Surajit
3)TIAN Wei Dong
4)DING Junqi
5)PALLA VENKATA Chandra Sekhar
6)DAVE Rajendra Mohanlal

(57) Abstract :
A foaming cleanser composition is provided which includes from 0.001 to 1 % of a calcium or magnesium salt; from 0.1 to 15% of an amphoteric surfactant; and wherein the composition exhibits a UMT Test number of rubs to onset of stick slip ranging from 1 to 12 under a 10 g load. The compositions combine a squeaky clean feeling after use without compromising the mildness of the product on the skin.

No. of Pages : 18 No. of Claims : 9

(12) PATENT APPLICATION PUBLICATION
(19) INDIA
(22) Date of filing of Application :30/07/2014

(21) Application No.1532/MUMNP/2014 A
(43) Publication Date : 08/05/2015

(54) Title of the invention : HYDROPHOBIC SILICAS AS SQUEAKINESS ENHANCERS IN CLEANSING COMPOSITIONS

(51) International classification :A61K8/25,A61K8/44,A61K8/46
(31) Priority Document No :13/370707
(32) Priority Date :10/02/2012
(33) Name of priority country :U.S.A.
(86) International Application No :PCT/EP2013/052468
Filing Date :07/02/2013
(87) International Publication No:WO 2013/117664
(61) Patent of Addition to Application Number :NA
Filing Date :NA
(62) Divisional to Application Number :NA
Filing Date :NA

(71)**Name of Applicant :**
1)UNILEVER PLC
Address of Applicant :Unilever House 100 Victoria Embankment London Greater London EC4Y 0DY U.K.
(72)**Name of Inventor :**
1)PALLA VENKATA Chandra Sekhar
2)MUKHERJEE Surajit
3)TIAN Wei Dong
4)VETHAMUTHU Martin Swanson
5)DAVE Rajendra Mohanlal
6)DING Junqi

(57) Abstract :
A cleanser composition is provided which includes: (i) from 0.01 to 5% by weight of a hydrophobic or cationic silica having a number average particle size ranging from 1 to 30 000 nm; (ii) from 0.1 to 30% by weight of a non soap synthetic surfactant; and wherein the composition exhibits a UMT Test number of rubs to stick slip from 1 to 12 under a 20 g load and a foam volume ranging from 200 to 800 ml using a SITA Foam Tester.

No. of Pages : 20 No. of Claims : 10

(12) PATENT APPLICATION PUBLICATION
(21) Application No.1110/MUM/2013 A
(19) INDIA
(22) Date of filing of Application :25/03/2013
(43) Publication Date : 08/05/2015

(54) Title of the invention : SYSTEM AND METHOD TO PROVIDE RESTRICTIVE CAPTURING OF PARAMETERS ASSOCIATED WITH AN OBJECT

(51) International classification :G01C21/24
(31) Priority Document No :NA
(32) Priority Date :NA
(33) Name of priority country :NA
(86) International Application No :NA
Filing Date :NA
(87) International Publication No : NA
(61) Patent of Addition to Application Number :NA
Filing Date :NA
(62) Divisional to Application Number :NA
Filing Date :NA

(71)**Name of Applicant :**
1)TATA CONSULTANCY SERVICES LIMITED
Address of Applicant :NIRMAL BUILDING, 9TH FLOOR, NARIMAN POINT, MUMBAI 400021, MAHARASHTRA, INDIA
(72)**Name of Inventor :**
1)LOBO, SYLVAN
2)DOKE, PANKAJ
3)GORE, KUSHAL
4)RAZA, RAMIZ
5)SUNKA, PRAVEEN
6)CHANDEL, PRIYANKA
7)DEVKAR, SUJIT
8)KIMBAHUNE, SANJAY

(57) Abstract :
Disclosed is a method and system for providing a restrictive control while capturing parameters associated with the object. The system comprises a privacy device to enable a restrictive control mechanism, the privacy device allowing the object to select and customize the privacy setting regarding capture of object parameters and broadcasting the privacy settings so selected in a regular manner, irrespective of the data capturing request. Present invention further provides a restrictive data capturing where a data capturing device is provided to capture parameters associated with the object by following a restrictive control mechanism wherein the object controls the restrictive data capturing. The data capturing device captures parameters associated with the object and receive privacy setting from the object regarding capturing of parameters and to enable an execution of the restrictive data capturing in accordance with the privacy setting so received.

No. of Pages : 35 No. of Claims : 30

(12) PATENT APPLICATION PUBLICATION
(19) INDIA
(22) Date of filing of Application :31/07/2014
(21) Application No.1543/MUMNP/2014 A
(43) Publication Date : 08/05/2015

(54) Title of the invention : ELECTROCHEMICAL SYNTHESIS OF CHLORO CHITOSAN

(51) International classification :C08B37/06,B01J47/08,C08L5/08
(31) Priority Document No :61/594619
(32) Priority Date :03/02/2012
(33) Name of priority country :U.S.A.
(86) International Application No :PCT/US2013/024307
Filing Date :01/02/2013
(87) International Publication No :WO 2013/116619
(61) Patent of Addition to Application Number :NA
Filing Date :NA
(62) Divisional to Application Number :NA
Filing Date :NA

(71)**Name of Applicant :**
1)THE RESEARCH FOUNDATION OF STATE UNIVERSITY OF NEW YORK
Address of Applicant :35 State Street Albany NY 12201 2826 U.S.A.
(72)**Name of Inventor :**
1)HALADA Gary P.
2)JHA Prashant Kumar

(57) Abstract :
The present disclosure provides methods for producing chitosan derivatives and the derivatives formed by these methods. The processes of the present disclosure utilize electrochemical methods to functionalize and/or modify amine and/or hydroxyl groups present on chitosan to form new derivatives. In embodiments a chloro chitosan derivative may be prepared. The altered cationic affinity of these derivatives make them excellent candidates for biomedical applications including pharmaceuticals as well as food applications.

No. of Pages : 15 No. of Claims : 18

(12) PATENT APPLICATION PUBLICATION
(19) INDIA
(22) Date of filing of Application :31/07/2014
(21) Application No.1544/MUMNP/2014 A
(43) Publication Date : 08/05/2015

(54) Title of the invention : SYSTEM AND METHOD FOR REAL TIME SEGMENTATION

(51) International classification	:G06Q10/08,G06Q30/06,G02C7/02
(31) Priority Document No	:12305146.8
(32) Priority Date	:10/02/2012
(33) Name of priority country	:EPO
(86) International Application No	:PCT/EP2013/052700
Filing Date	:11/02/2013
(87) International Publication No	:WO 2013/117766
(61) Patent of Addition to Application Number	:NA
Filing Date	:NA
(62) Divisional to Application Number	:NA
Filing Date	:NA

(71)**Name of Applicant :**
1)ESSILOR INTERNATIONAL (COMPAGNIE GENERALE DOPTIQUE)
Address of Applicant :147 rue de Paris F 94220 Charenton Le Pont France France
(72)**Name of Inventor :**
1)DROBE Bjorn
2)CARIMALO Celine

(57) Abstract :
A system and method for updating a generic ophthalmic lens design is described. The method comprises the steps of selecting a generic ophthalmic lens design from a generic ophthalmic lens design database and receiving over a data communication network lens order data associated with at least one individual lens wearer. The method also includes the steps of creating using the generic ophthalmic lens design and the lens order data at least one customized ophthalmic lens design being customized for the respective at least one individual lens wearer and updating the generic ophthalmic lens design in the generic ophthalmic lens design database using the at least one customized ophthalmic lens design.

No. of Pages : 23 No. of Claims : 15

(12) PATENT APPLICATION PUBLICATION
(19) INDIA
(22) Date of filing of Application :31/07/2014
(21) Application No.1545/MUMNP/2014 A
(43) Publication Date : 08/05/2015

(54) Title of the invention : SYSTEM AND METHOD FOR DETERMINING LOCATION OF A DEVICE USING OPPOSING CAMERAS

(51) International classification :G01C21/20,H04W64/00
(31) Priority Document No :13/360372
(32) Priority Date :27/01/2012
(33) Name of priority country :U.S.A.
(86) International Application No :PCT/US2013/022527
Filing Date :22/01/2013
(87) International Publication No :WO 2013/112461
(61) Patent of Addition to Application Number :NA
Filing Date :NA
(62) Divisional to Application Number :NA
Filing Date :NA

(71)**Name of Applicant :**
1)QUALCOMM INCORPORATED
Address of Applicant :Attn: International IP Administration 5775 Morehouse Drive San Diego California 92121 U.S.A..
(72)**Name of Inventor :**
1)CHAO Hui
2)DAS Saumitra Mohan
3)PODURI Sameera

(57) Abstract :
System and method for determining location of a device using opposing cameras are disclosed. In one embodiment the method includes activating a front facing camera and a back facing camera of the device capturing a first pair of images from a first orientation using the front facing camera and the back facing camera where the first pair of images includes a first front image and a first back image monitoring the device being rotated to a second orientation capturing a second pair of images from the second orientation using the front facing camera and the back facing camera where the second pair of images includes a second front image and a second back image and determining a location of the device using the first pair of images and the second pair of images.

No. of Pages : 48 No. of Claims : 43

(12) PATENT APPLICATION PUBLICATION
(21) Application No.1116/MUM/2013 A
(19) INDIA
(22) Date of filing of Application :25/03/2013
(43) Publication Date : 08/05/2015

(54) Title of the invention : A SYSTEM AND METHOD FOR VISUAL MESSAGE COMMUNICATION

(51) International classification	:H04W4/14, H04W4/18
(31) Priority Document No	:NA
(32) Priority Date	:NA
(33) Name of priority country	:NA
(86) International Application No	:NA
Filing Date	:NA
(87) International Publication No	: NA
(61) Patent of Addition to Application Number	:NA
Filing Date	:NA
(62) Divisional to Application Number	:NA
Filing Date	:NA

(71)**Name of Applicant :**
1)TATA CONSULTANCY SERVICES LIMITED
Address of Applicant :NIRMAL BUILDING, 9TH FLOOR, NARIMAN POINT, MUMBAI 400021, MAHARASHTRA, INDIA.
(72)**Name of Inventor :**
1)SHEIKH, IMRAN AHMED
2)KOPPARAPU, SUNIL KUMAR

(57) Abstract :
A broadcaster (102) for visual information broadcast, comprising a receiving module (212) configured to receive a first input. The first input comprises a string of characters selected from a text, or an image, or combination thereof. The first input is transformed into a first image having at least two dimensions. The broadcaster further comprises an encoder module (214) configured to convert the first image into a one dimensional signal waveform. Further, a modulator module (216) is configured to modulate the one dimensional signal waveform for transmission into a modulated one dimensional signal waveform. The broadcaster further comprises a radio transmitter, wherein the radio transmitter transmits the modulated one dimensional signal waveform over a radio channel, wherein the radio channel is configured to transmit audio signals.

No. of Pages : 23 No. of Claims : 12

(12) PATENT APPLICATION PUBLICATION
(19) INDIA
(22) Date of filing of Application :01/08/2014
(21) Application No.1551/MUMNP/2014 A
(43) Publication Date : 08/05/2015

(54) Title of the invention : OPHTHALMIC COMPOSITION CONTAINING GERANYLGERANYLACETONE

(51) International classification :A61K31/121,A61K9/06,A61K9/08
(31) Priority Document No :2012-040779
(32) Priority Date :27/02/2012
(33) Name of priority country :Japan
(86) International Application No :PCT/JP2013/054779
Filing Date :25/02/2013
(87) International Publication No :WO 2013/129317
(61) Patent of Addition to Application Number :NA
Filing Date :NA
(62) Divisional to Application Number :NA
Filing Date :NA

(71)**Name of Applicant :**
1)ROHTO PHARMACEUTICAL CO. LTD.
Address of Applicant :1 8 1 Tatsumi nishi Ikuno ku Osaka shi Osaka 5448666 Japan
(72)**Name of Inventor :**
1)MIYANOTakayuki
2)KUROSETakahiro
3)KATOMariyo
4)TAKAI Yoshihiro

(57) Abstract :
An ophthalmic composition containing a geranylgeranylacetone selected from (a) (b) or (c) mentioned below protects various retina cells from degeneration disorder or annihilation and significantly promotes the survival of said cells. Therefore said composition exerts a dramatic effect in the prevention amelioration or treatment of various retina disorders. Moreover the composition is less likely to become cloudy when being stored. (a) A mixture of 5E 9E 13E geranylgeranylacetone and 5Z 9E 13E geranylgeranylacetone the mixture containing 80 weight% or more of the 5E 9E 13E geranylgeranylacetone; (b) only 5E 9E 13E geranylgeranylacetone; (c) only 5Z 9E 13E geranylgeranylacetone.

No. of Pages : 84 No. of Claims : 7

(12) PATENT APPLICATION PUBLICATION
(19) INDIA
(22) Date of filing of Application :01/08/2014
(21) Application No.1552/MUMNP/2014 A
(43) Publication Date : 08/05/2015

(54) Title of the invention : PROPHYLACTIC AMELIORATING OR THERAPEUTIC AGENT FOR RETINAL DISEASES

(51) International classification :A61K31/121,A61K9/08,A61K47/02
(31) Priority Document No :2012-040803
(32) Priority Date :27/02/2012
(33) Name of priority country :Japan
(86) International Application No :PCT/JP2013/054774
Filing Date :25/02/2013
(87) International Publication No :WO 2013/129315
(61) Patent of Addition to Application Number :NA
Filing Date :NA
(62) Divisional to Application Number :NA
Filing Date :NA

(71)**Name of Applicant :**
1)ROHTO PHARMACEUTICAL CO. LTD.
Address of Applicant :1 8 1 Tatsumi nishi Ikuno ku Osaka shi Osaka 5448666 Japan
(72)**Name of Inventor :**
1)KUROSETakahiro
2)MIYANOTakayuki
3)KATOMariyo
4)TAKAI Yoshihiro

(57) Abstract :
A prophylactic ameliorating or therapeutic agent for retinal diseases which comprises geranylgeranylacetone as mentioned in item (a) (b) or (c) below can inhibit the cell death of retinal cells directly to thereby prevent ameliorate or treat retinal diseases radically: (a) a mixture of 5E 9E 13E geranylgeranylacetone with 5Z 9E 13E geranylgeranylacetone wherein 5E 9E 13E geranylgeranylacetone is contained in the mixture in an amount of 80 wt% or more; (b) 5E 9E 13E geranylgeranylacetone alone; and (c) 5Z 9E 13E geranylgeranylacetone alone.

No. of Pages : 111 No. of Claims : 33

(12) PATENT APPLICATION PUBLICATION
(19) INDIA
(22) Date of filing of Application :01/08/2014
(21) Application No.1553/MUMNP/2014 A
(43) Publication Date : 08/05/2015

(54) Title of the invention : OPHTHALMIC COMPOSITION

(51) International classification :A61K31/121,A61K9/06,A61K9/08
(31) Priority Document No :2012-040675
(32) Priority Date :27/02/2012
(33) Name of priority country :Japan
(86) International Application No :PCT/JP2013/054785
Filing Date :25/02/2013
(87) International Publication No :WO 2013/129322
(61) Patent of Addition to Application Number :NA
Filing Date :NA
(62) Divisional to Application Number :NA
Filing Date :NA

(71)**Name of Applicant :**
1)ROHTO PHARMACEUTICAL CO. LTD.
Address of Applicant :1 8 1 Tatsumi nishi Ikuno ku Osaka shi Osaka 5448666 Japan
(72)**Name of Inventor :**
1)MIYANOTakayuki
2)KUROSETakahiro

(57) Abstract :
An ophthalmic composition containing a geranylgeranylacetone and a lipophilic antioxidant wherein the adsorption of the geranylgeranylacetone into a container wall is significantly inhibited and as a result the decline in the content or concentration of the geranylgeranylacetone within the composition is significantly inhibited. Moreover the adsorption of the lipophilic antioxidant into the container wall is also inhibited by being combined with the geranylgeranylacetone.

No. of Pages : 42 No. of Claims : 9

(12) PATENT APPLICATION PUBLICATION
(19) INDIA
(22) Date of filing of Application :28/05/2014
(21) Application No.1038/MUMNP/2014 A
(43) Publication Date : 08/05/2015

(54) Title of the invention : METHOD FOR DISINFECTING A SURFACE

(51) International classification :A01P1/00,A01N31/08,A01N49/00
(31) Priority Document No :61/567360
(32) Priority Date :06/12/2011
(33) Name of priority country :U.S.A.
(86) International Application No :PCT/EP2012/074416
Filing Date :05/12/2012
(87) International Publication No :WO 2013/083590
(61) Patent of Addition to Application Number :NA
Filing Date :NA
(62) Divisional to Application Number :NA
Filing Date :NA

(71)**Name of Applicant :**
1)UNILEVER PLC
Address of Applicant :a company registered in England and Wales under company no. 41424 of Unilever House 100 Victoria Embankment London Greater London EC4Y 0DY U.K.
(72)**Name of Inventor :**
1)CORNMELL Robert Joseph
2)DIEHL Megan Anne
3)GOLDING Stephen
4)HARP John Robert
5)STOTT Ian Peter
6)THOMPSON Katherine Mary
7)TRUSLOW Carol Lynn

(57) Abstract :
The present invention relates to a method for disinfection involving an antimicrobial composition. It particularly relates to an antimicrobial method for personal cleaning oral care or hard surface cleaning applications. It was found that compositions comprising thymol acyclic terpene alcohols and a carrier provide synergistic antimicrobial action in a method for disinfection. In a preferred aspect the composition also comprises 1 to 80 % wt of one or more surfactants.

No. of Pages : 51 No. of Claims : 13

(12) PATENT APPLICATION PUBLICATION
(19) INDIA
(22) Date of filing of Application :28/05/2014
(21) Application No.1039/MUMNP/2014 A
(43) Publication Date : 08/05/2015

(54) Title of the invention : ANTIMICROBIAL COMPOSITION

(51) International classification	:A01P1/00,A01N31/08,A01N31/06
(31) Priority Document No	:61/567355
(32) Priority Date	:06/12/2011
(33) Name of priority country	:U.S.A.
(86) International Application No	:PCT/EP2012/074418
Filing Date	:05/12/2012
(87) International Publication No	:WO 2013/083592
(61) Patent of Addition to Application Number	:NA
Filing Date	:NA
(62) Divisional to Application Number	:NA
Filing Date	:NA

(71)**Name of Applicant :**
1)UNILEVER PLC
Address of Applicant :a company registered in England and Wales under company no. 41424 of Unilever House 100 Victoria Embankment London Greater London EC4Y 0DY U.K.
(72)**Name of Inventor :**
1)CORNMELL Robert Joseph
2)DIEHL Megan Anne
3)GOLDING Stephen
4)HARP John Robert
5)STOTT Ian Peter
6)THOMPSON Katherine Mary
7)TRUSLOW Carol Lynn

(57) Abstract :
The present invention relates to an antimicrobial composition and a method for disinfection involving the antimicrobial composition. It particularly relates to an antimicrobial composition for personal cleaning oral care or hard surface cleaning applications. It was found that compositions comprising thymol menthadiene alcohols and a carrier provide synergistic antimicrobial action. In a preferred aspect the composition also comprises 1 to 80 % wt of one or more surfactants.

No. of Pages : 51 No. of Claims : 14

(12) PATENT APPLICATION PUBLICATION
(21) Application No.1095/MUM/2013 A
(19) INDIA
(22) Date of filing of Application :25/03/2013
(43) Publication Date : 08/05/2015

(54) Title of the invention : COMPACT OPERATOR WITH C-CUT OUTER STEM FOR NON-LUBRICATED DOUBLE BLOCK AND BLEED PLUG VALVES

(51) International classification	:F16K 5/02
(31) Priority Document No	:NA
(32) Priority Date	:NA
(33) Name of priority country	:NA
(86) International Application No	:NA
Filing Date	:NA
(87) International Publication No	: NA
(61) Patent of Addition to Application Number	:NA
Filing Date	:NA
(62) Divisional to Application Number	:NA
Filing Date	:NA

(71)**Name of Applicant :**
1)LARSEN & TOUBRO LIMITED
Address of Applicant :LARSEN & TOUBRO LIMITED L&T HOUSE, BALLARD ESTATE, MUMBAI-400001, MAHARASHTRA STATE, INDIA
(72)**Name of Inventor :**
1)DEEPAK SUSEELAN NAIR
2)MUTHU ARUNACHALAM
3)MURUGANANTHAM RAMAKRISHNAN

(57) Abstract :
Disclosed is compact operator for a double block and bleed plug valve. The compact operator comprises a cylindrical hollow body member, an inner stem, an outer stem, a connecting means, a gear mechanism, a guide ball, a lock ball and a locking pin. The compact operator replaces the customary and complicated L Slot as in conventional mechanism with a C-shaped cut at the top of a cylindrical hollow body member thereby reducing the height as well eliminating the complicated machining requirement.

No. of Pages : 16 No. of Claims : 4

(12) PATENT APPLICATION PUBLICATION
(19) INDIA
(22) Date of filing of Application :01/08/2014
(21) Application No.1556/MUMNP/2014 A
(43) Publication Date : 08/05/2015

(54) Title of the invention : AUTOMATIC AND VITAL DETERMINATION OF TRAIN LENGTH CONFIGURATION

(51) International classification	:B61L25/02 ,B61L15/00
(31) Priority Document No	:13/482735
(32) Priority Date	:29/05/2012
(33) Name of priority country	:U.S.A.
(86) International Application No	:PCT/IB2013/001086
Filing Date	:29/05/2013
(87) International Publication No	:WO 2013/179121
(61) Patent of Addition to Application Number	:NA
Filing Date	:NA
(62) Divisional to Application Number	:NA
Filing Date	:NA

(71)**Name of Applicant :**
1)THALES CANADA INC.
Address of Applicant :105 Moatfield Toronto Ontario M3B 0A4 Canada
(72)**Name of Inventor :**
1)KANNER Abe
2)FARCASIU Iona
3)DIMMER Dave

(57) Abstract :
A train system that includes a plurality of coupled train units. Each train unit includes a controller VOBC configured to independently determine the location of each VOBC and a configuration of the train system by comprising a plurality of inputs a plurality of train lines spanning each train unit and coupled with the controllers at the plurality of inputs and configured to transmit two communication signals between a front end and a rear end of the train system and a plurality of sets of relay devices connected in series along the plurality of train lines and each set of relay devices corresponding to each input of the plurality of inputs and configured to transmit the two communication signals between the front end and the rear end of the train system.

No. of Pages : 51 No. of Claims : 20

(12) PATENT APPLICATION PUBLICATION
(21) Application No.1558/MUMNP/2014 A
(19) INDIA
(22) Date of filing of Application :01/08/2014
(43) Publication Date : 08/05/2015

(54) Title of the invention : A PROCESS FOR THE PRODUCTION OF ETHYLENICALLY UNSATURATED CARBOXYLIC ACIDS OR ESTERS AND A CATALYST THEREFOR

(51) International classification :C07C67/343,C07C51/353
(31) Priority Document No :1200551.8
(32) Priority Date :13/01/2012
(33) Name of priority country :U.K.
(86) International Application No :PCT/GB2013/050062
Filing Date :14/01/2013
(87) International Publication No :WO 2013/104924
(61) Patent of Addition to Application Number :NA
Filing Date :NA
(62) Divisional to Application Number :NA
Filing Date :NA

(71)**Name of Applicant :**
1)LUCITE INTERNATIONAL UK LIMITED
Address of Applicant :Cumberland House 15 17 Cumberland Place Southampton Hampshire SO15 2BG U.K.
(72)**Name of Inventor :**
1)YORK Ian Andrew
2)ZIEMIAN Sabina

(57) Abstract :
A method of producing an ethylenically unsaturated typically an a ethylenically unsaturated carboxylic acid or ester is described. The method comprises the steps of contacting formaldehyde or a source of formaldehyde with a carboxylic acid or ester in the presence of a catalyst and optionally in the presence of an alcohol. The catalyst comprises barium phosphate leaf or plate shaped/like crystals or a source thereof.A catalyst system is also described. The catalyst system comprises a crystalline barium phosphate catalyst and optionally a catalyst support.

No. of Pages : 42 No. of Claims : 17

(12) PATENT APPLICATION PUBLICATION
(19) INDIA
(22) Date of filing of Application :25/03/2013
(21) Application No.1080/MUM/2013 A
(43) Publication Date : 08/05/2015

(54) Title of the invention : A SMART WATER TEMPERATURE INDICATOR

(51) International classification	:G01N21/81, G01N31/00, G01N31/22
(31) Priority Document No	:NA
(32) Priority Date	:NA
(33) Name of priority country	:NA
(86) International Application No	:NA
Filing Date	:NA
(87) International Publication No	: NA
(61) Patent of Addition to Application Number	:NA
Filing Date	:NA
(62) Divisional to Application Number	:NA
Filing Date	:NA

(71)**Name of Applicant :**
1)Dr. Vasani Rupesh Parmanand
Address of Applicant :07, Aditraj Bunglows, Near Nandanvan-5, B/h Kalatirth Apartment, Prernatirth Derasar Road, Jodhpur, Ahmedabad-380015. Gujarat, India.
2)Shah Parin Kamalkumar
3)Jain Anjil Anvin
4)Bhavsar Swapnil Chandrakant
(72)**Name of Inventor :**
1)Dr. Vasani Rupesh Parmanand
2)Shah Parin Kamalkumar
3)Jain Anjil Anvin
4)Bhavsar Swapnil Chandrakant
5)Patel Bhupendra Laljibhai

(57) Abstract :
The present invention a safety device with the help of the sensor and light indication unit which measure the temperature of the tap water and indicate with the light on the display, so there is no need to put the hand in front of the tap to know the temperature.

No. of Pages : 9 No. of Claims : 3

(12) PATENT APPLICATION PUBLICATION
(21) Application No.1131/MUM/2013 A
(19) INDIA
(22) Date of filing of Application :26/03/2013
(43) Publication Date : 08/05/2015

(54) Title of the invention : ASSEMBLY OF INSERT CARRIER USING BALL PLUNGER

(51) International classification :B65B13/22
(31) Priority Document No :NA
(32) Priority Date :NA
(33) Name of priority country :NA
(86) International Application No :NA
Filing Date :NA
(87) International Publication No : NA
(61) Patent of Addition to Application Number :NA
Filing Date :NA
(62) Divisional to Application Number :NA
Filing Date :NA

(71)**Name of Applicant :**
1)LARSEN & TOUBRO LIMITED
Address of Applicant :LARSEN & TOUBRO LIMITED L&T HOUSE, BALLARD ESTATE, MUMBAI-400001, MAHARASHTRA STATE, INDIA
(72)**Name of Inventor :**
1)SURYAKANT K PAWAR

(57) Abstract :
Disclosed is an insert carrier assembly for moulding an insert with a component during moulding process. The insert carrier assembly comprises an elongated pin member for ejecting moulded components. The elongated pin member is configured on any one of a fixed half and a moving half of a mould. The elongated pin member includes a groove configured within an inner diameter thereof. Further, the insert carrier assembly includes a carrier holding the insert therein. The carrier is capable of being secured on to the elongated pin member. Furthermore, the insert carrier assembly includes a ball plunger configured within the elongated pin member. The ball plunger includes a spring loaded ball capable of being fitted into the groove of the elongated pin member.

No. of Pages : 21 No. of Claims : 2

(12) PATENT APPLICATION PUBLICATION
(21) Application No.1561/MUMNP/2014 A
(19) INDIA
(22) Date of filing of Application :02/08/2014
(43) Publication Date : 08/05/2015

(54) Title of the invention : COMPRESSION RESISTANT SELECTIVELY SLIT AND EMBOSSED FILMS AND INDUSTRIAL TEXTILES MADE THEREOF

(51) International classification :B29C59/02,B29C51/00,B29D29/06
(31) Priority Document No :2779131
(32) Priority Date :07/06/2012
(33) Name of priority country :Canada
(86) International Application No :PCT/CA2013/000553
Filing Date :06/06/2013
(87) International Publication No :WO 2013/181748
(61) Patent of Addition to Application Number :NA
Filing Date :NA
(62) Divisional to Application Number :NA
Filing Date :NA

(71)**Name of Applicant :**
1)ASTENJOHNSON, INC.
Address of Applicant :4399 CORPORATE ROAD CHARLESTON, SOUTH CAROLINA 29405, U.S.A
(72)**Name of Inventor :**
1)MANNINEN Allan R.

(57) Abstract :
A film for conveying in an industrial process industrial fabrics made from the film and methods of manufacture. The film has a plurality of protrusions separated by land areas. Each protrusion comprises a top member having opposing lateral edges and is supported by opposed compression resistant first and second end walls which with at least one of the lateral edges define an aperture extending through the film to provide a flow path. The base edge of each end wall has a configuration selected from at least one of the base edge being convexly curved away from the protrusion body; and each end wall extending below at least a part of each of the first and second lateral edges and being connected to each of the first and second lateral edges. The film structure provides physical properties equivalent to a woven fabric with improved strength stability and compression resistance.

No. of Pages : 57 No. of Claims : 41

(12) PATENT APPLICATION PUBLICATION
(19) INDIA
(22) Date of filing of Application :30/04/2013
(21) Application No.1562/MUM/2013 A
(43) Publication Date : 08/05/2015

(54) Title of the invention : WHEELED LEVER

(51) International classification	:B60T11/04, A61H3/04
(31) Priority Document No	:NA
(32) Priority Date	:NA
(33) Name of priority country	:NA
(86) International Application No	:NA
Filing Date	:NA
(87) International Publication No	: NA
(61) Patent of Addition to Application Number	:NA
Filing Date	:NA
(62) Divisional to Application Number	:NA
Filing Date	:NA

(71)**Name of Applicant :**
1)NAGENDRAPRATAP R. SINGH
Address of Applicant :FLAT 201, SAI VASTU, PLOT 97 A, SECTOR 1, SANPADA, NAVI MUMBAI 400705, MAHARASHTRA, INDIA
(72)**Name of Inventor :**
1)NAGENDRAPRATAP R. SINGH

(57) Abstract :
At present all levers are simple levers where load is kept at one end of the lever and work is done at another end of the lever. A normal lever in this case moves up and down. There is no lever which takes Force input as a circulatory motion and gives output also as a circulatory motion. This is designed in such a way that fulcrum can be moved back and forward easily. So that this levered wheel can become Power/Energy Multiplier whenever fulcrum is moved towards load arm of the lever.

No. of Pages : 14 No. of Claims : 9

(12) PATENT APPLICATION PUBLICATION
(19) INDIA
(22) Date of filing of Application :04/08/2014
(21) Application No.1562/MUMNP/2014 A
(43) Publication Date : 08/05/2015

(54) Title of the invention : BINDING AGENTS TO INTRACELLULAR TARGET MOLECULES

(51) International classification :C07K14/00,C07K16/10
(31) Priority Document No :12150406.2
(32) Priority Date :06/01/2012
(33) Name of priority country :EPO
(86) International Application No :PCT/EP2013/050101
Filing Date :04/01/2013
(87) International Publication No :WO 2013/102659
(61) Patent of Addition to Application Number :NA
Filing Date :NA
(62) Divisional to Application Number :NA
Filing Date :NA

(71)**Name of Applicant :**
1)COMPLIX NV
Address of Applicant :Bioville Agoralaan Building A bis B 3590 Diepenbeek Belgium
(72)**Name of Inventor :**
1)LASTERS Ignace
2)VAECK Mark
3)DESMET Johan
4)DEBAVEYE J¼rgen
5)DEROO Sabrina
6)LOVERIX Stefan

(57) Abstract :
The application provides polypeptides comprising or essentially consisting of at least one Alphabody wherein said Alphabody is capable of internalization into a cell and specifically binds to an intracellular target molecule. The application further provides nucleic acids encoding such polypeptides; methods for preparing such polypeptides; host cells expressing or capable of expressing such polypeptides; compositions and in particular to pharmaceutical compositions that comprise such polypeptides nucleic acids and/or host cells; and uses of such polypeptides nucleic acids host cells and/or compositions in particular for prophylactic therapeutic or diagnostic purposes.

No. of Pages : 160 No. of Claims : 9

(12) PATENT APPLICATION PUBLICATION
(21) Application No.1565/MUMNP/2014 A
(19) INDIA
(22) Date of filing of Application :01/08/2014
(43) Publication Date : 08/05/2015

(54) Title of the invention : MONITORING SYSTEM FOR MEASURING SPEED AND ELONGATION OF TRANSPORT CHAINS

(51) International classification :G01L5/04,G01M13/02,G01B7/04
(31) Priority Document No :MI2012A000120
(32) Priority Date :31/01/2012
(33) Name of priority country :Italy
(86) International Application No :PCT/EP2013/051817
Filing Date :30/01/2013
(87) International Publication No :WO 2013/113764
(61) Patent of Addition to Application Number :NA
Filing Date :NA
(62) Divisional to Application Number :NA
Filing Date :NA

(71)**Name of Applicant :**
1)REXNORD FLATTOP EUROPE S.R.L.
Address of Applicant :Via DellIndustria 4 I 42015 Correggio (RE) Italy
(72)**Name of Inventor :**
1)ANDREOLI Andrea
2)SALICE Fabio

(57) Abstract :
A monitoring system for a conveyor of articles is provided. The conveyor of articles comprises a static portion and at least one respective endless transport chain adapted to be moved with respect to the static portion when the conveyor of articles is in operation. The system includes a reference element located on the transport chain a first sensor integral with the static portion and a second sensor integral with the static portion. Said first and second sensors are distant to each other by a first distance; each sensor is configured for sensing the passage of the reference element close to the sensor itself during the operation of the conveyor. The system further includes counting means coupled with the sensors and configured to measure a first time corresponding to the time elapsed between a first passage of the reference element close to the first sensor and a first passage of the reference element close to the second sensor. The counting means are further configured to measure a second time corresponding to the time elapsed between the first passage of the reference element close to the first sensor and a second passage of the reference element close to the first sensor or to the time elapsed between the first passage of the reference element close to the second sensor and a second passage of the reference element close to the second sensor. Said second passage is subsequent to the first passage. The system further comprises computing means configured to determine the transport chain movement speed with respect to the static portion based on the first measured time and the first distance and determine the length of the chain based on the determined movement speed and based on the second measured time.

No. of Pages : 22 No. of Claims : 10

(12) PATENT APPLICATION PUBLICATION
(21) Application No.1566/MUMNP/2014 A
(19) INDIA
(22) Date of filing of Application :04/08/2014
(43) Publication Date : 08/05/2015

(54) Title of the invention : FILE PROCESSING METHOD AND SYSTEM

(51) International classification :G06F12/08
(31) Priority Document No :201210025896.X
(32) Priority Date :07/02/2012
(33) Name of priority country :China
(86) International Application No :PCT/CN2013/071199
Filing Date :31/01/2013
(87) International Publication No :WO 2013/117142
(61) Patent of Addition to Application Number :NA
Filing Date :NA
(62) Divisional to Application Number :NA
Filing Date :NA

(71)**Name of Applicant :**
1)TENCENT TECHNOLOGY (SHENZHEN) COMPANY LIMITED
Address of Applicant :Room 403 East Block 2 Seg Park Zhenxing Road Futian District Shenzhen Guangdong 518044 China
(72)**Name of Inventor :**
1)CHEN Zhuo
2)BAI Zipan

(57) Abstract :
Various embodiments provide a file processing method and system. An exemplary file processing method can include receiving a request for opening a file applying for a memory area corresponding to the file requested for opening and setting a property of the memory area as non readable and non writable. After receiving a request for reading the file the memory area corresponding to the file requested for reading can be accessed. If the accessing fails for a failure reason that the property of the memory area is non readable and non writable file data requested for reading can be obtained from a disk by calling a memory access exception handler function registered in an operating system. The obtained file data can be stored in the memory area. The property of the memory area can be set as readable and writable and the file data can be read from the memory area.

No. of Pages : 23 No. of Claims : 10

(12) PATENT APPLICATION PUBLICATION
(19) INDIA
(22) Date of filing of Application :04/08/2014
(21) Application No.1567/MUMNP/2014 A
(43) Publication Date : 08/05/2015

(54) Title of the invention : MULTIPLE ANTENNA SYSTEM

(51) International classification :H01Q1/52,H01Q21/10,H01Q21/24
(31) Priority Document No :217982
(32) Priority Date :07/02/2012
(33) Name of priority country :Israel
(86) International Application No :PCT/IL2013/050116
Filing Date :07/02/2013
(87) International Publication No :WO 2013/118123
(61) Patent of Addition to Application Number :NA
Filing Date :NA
(62) Divisional to Application Number :NA
Filing Date :NA

(71)**Name of Applicant :**
1)ELTA SYSTEMS LTD.
Address of Applicant :100 Yitzchak Hanassi Blvd. P.O.B. 330 77102 Ashdod Israel
(72)**Name of Inventor :**
1)ALMOG Benyamin

(57) Abstract :
The present invention relates to an antenna system (100) including at least two antenna modules (110 120) operable for transmitting and/or receiving radiation in certain common frequency band. The at least two antenna modules (110 120) are collinearly arranged along a common axis so as to provide low gain along the axis and are spaced apart from one another along this axis by a distance of at least a few nominal wavelengths of the common frequency band. Each two locally adjacent antenna modules of the at least two antenna modules (110 120) operate with substantially mutually orthogonal polarizations of radiation thereby suppressing electromagnetic coupling between the antenna modules in the common frequency band.

No. of Pages : 43 No. of Claims : 29

(12) PATENT APPLICATION PUBLICATION
(21) Application No.1088/MUM/2013 A
(19) INDIA
(22) Date of filing of Application :25/03/2013
(43) Publication Date : 08/05/2015

(54) Title of the invention : LOCKING AND SEALING ARRANGEMENT FOR PUSH BUTTON OF ELECTRONIC ENERGY METERS

(51) International classification :A47G19/22
(31) Priority Document No :NA
(32) Priority Date :NA
(33) Name of priority country :NA
(86) International Application No :NA
Filing Date :NA
(87) International Publication No : NA
(61) Patent of Addition to Application Number :NA
Filing Date :NA
(62) Divisional to Application Number :NA
Filing Date :NA

(71)**Name of Applicant :**
1)LARSEN & TOUBRO LIMITED
Address of Applicant :LARSEN & TOUBRO LIMITED L & T HOUSE, BALLARD ESTATE, P. O. BOX: 278, MUMBAI 400 001, INDIA Maharashtra India
(72)**Name of Inventor :**
1)KAMALAKAR M
2)VIJENDRA K

(57) Abstract :
Disclosed is a a locking and sealing arrangement for push button of electronic energy meters. The arrangement comprises a push button having two tabs projecting out in opposite directions, and at least one a sealing hole configured thereon. Further, the arrangement comprises a top cover capable of receiving the tabs of the push button and a hole aligning with sealing hole on the push button. The top cover engages with a self locking means of the push button. A spring is positioned between the push button and the top cover to retract the push button when pressed. The arrangement further includes a wire with seal to be passed through the sealing hole of the push button and the hole of the top cover to prevents the rotation of push button.

No. of Pages : 11 No. of Claims : 2

(12) PATENT APPLICATION PUBLICATION
(21) Application No.1505/MUM/2013 A
(19) INDIA
(22) Date of filing of Application :25/06/2013
(43) Publication Date : 08/05/2015

(54) Title of the invention : DEVICE FOR DIELECTRIC CHARACTERIZATION OF LOW LOSS LIQUIDS

(51) International classification	:H01P1/20, C04B35/46, H01P7/10
(31) Priority Document No	:NA
(32) Priority Date	:NA
(33) Name of priority country	:NA
(86) International Application No	:NA
Filing Date	:NA
(87) International Publication No	: NA
(61) Patent of Addition to Application Number	:NA
Filing Date	:NA
(62) Divisional to Application Number	:NA
Filing Date	:NA

(71)**Name of Applicant :**
1)SAVITA GAJANAN KULKARNI
Address of Applicant :C-104 PINAC SADICCHA, NEAR MIT CAMPUS, KOTHRUD, PUNE-411038, M.S. INDIA Maharashtra India
2)MADHURI SATISH JOSHI
3)ISHAN ABHIJIT DABHOLKAR
4)SHREERAJ GANPAT KADAM
5)HARSHAL YASHWANT DAKHODE
(72)**Name of Inventor :**
1)SAVITA GAJANAN KULKARNI
2)MADHURI SATISH JOSHI
3)ISHAN ABHIJIT DABHOLKAR
4)SHREERAJ GANPAT KADAM
5)HARSHAL YASHWANT DAKHODE

(57) Abstract :
Disclosed is a device for dielectric characterization of a low loss liquid. The device comprises of a resonator sensor encased in a metallic casing and an analyzer for analyzing a standing wave pattern from the resonator sensor. The resonator sensor includes at least two ground planes, at least two dielectric substrates, at least two patches and at least two feed lines. The resonator sensor of the device resonates at a resonant frequency of oscillation used for permittivity measurement and a dielectric characterization of a low loss liquid, particularly petroleum liquid. The dielectric constant of the low loss liquid is used to indicate whether the low loss liquid has been adulterated.

No. of Pages : 16 No. of Claims : 4

(12) PATENT APPLICATION PUBLICATION
(19) INDIA
(22) Date of filing of Application :05/08/2014
(21) Application No.1577/MUMNP/2014 A
(43) Publication Date : 08/05/2015

(54) Title of the invention : CYCLOALKANE DERIVATIVE

(51) International classification :C07D285/08,A61K31/427,A61K31/433
(31) Priority Document No :2012-025754
(32) Priority Date :09/02/2012
(33) Name of priority country :Japan
(86) International Application No :PCT/JP2013/052985
Filing Date :08/02/2013
(87) International Publication No :WO 2013/118854
(61) Patent of Addition to Application Number :NA
Filing Date :NA
(62) Divisional to Application Number :NA
Filing Date :NA

(71)**Name of Applicant :**
1)DAIICHI SANKYO COMPANYLIMITED
Address of Applicant :3 5 1Nihonbashi HonchoChuo ku Tokyo 1038426 Japan
(72)**Name of Inventor :**
1)SHINOZUKA Tsuyoshi
2)KOBAYASHI Hiroyuki
3)SUZUKI Sayaka
4)TANAKA Kyosuke
5)KIMOTO Hiroko
6)DOMON Yuki

(57) Abstract :
Provided is a drug for the treatment and/or prevention of pain or a drug for the treatment and/or prevention of sodium channel mediated diseases. A compound represented by the formula (I) or a pharmaceutically acceptable salt thereof: Ar Ar: heteroaryl group aryl group; R R R: hydrogen atom halogen atom C1 C6 alkyl group halogenated C1 C6 alkyl group hydroxy C1 C6 alkyl group C1 C6 alkoxy C1 C6 alkyl group or C3 C7 cycloalkyl group cyano group; R R: hydrogen atom halogen atom C1 C6 alkyl group halogenated C1 C6 alkyl group hydroxyl group hydroxy C1 C6 alkyl group C1 C6 alkoxy C1 C6 alkyl group C3 C7 cycloalkyl group C1 C6 alkoxy group; n: integer from 1 to 3; the heteroaryl group and aryl group may have one or two groups selected independently from a halogen atom C1 C6 alkyl group halogenated C1 C6 alkyl group hydroxyl group hydroxy C1 C6 alkyl group C1 C6 alkoxy C1 C6 alkyl group C3 C7 cycloalkyl group carboxyl group cyano group amino group C1 C3 alkylamino group and di C1 C3 alkylamino group; in the case of two the two may be the same or different.

No. of Pages : 548 No. of Claims : 31

(12) PATENT APPLICATION PUBLICATION
(21) Application No.1578/MUMNP/2014 A
(19) INDIA
(22) Date of filing of Application :05/08/2014
(43) Publication Date : 08/05/2015

(54) Title of the invention : HIGHLY THICKENING PASTE COMPOSITION AND METHOD FOR PRODUCING SAME AND LOW VISCOSITY SUBSTANCE AND METHOD FOR CONTROLLING VISCOSITY THEREOF BOTH USING SAME

(51) International classification :A23L1/05
(31) Priority Document No :2012-009497
(32) Priority Date :19/01/2012
(33) Name of priority country :Japan
(86) International Application No :PCT/JP2013/051007
Filing Date :18/01/2013
(87) International Publication No :WO 2013/108909
(61) Patent of Addition to Application Number :NA
Filing Date :NA
(62) Divisional to Application Number :NA
Filing Date :NA

(71)**Name of Applicant :**
1)SOMAR CORPORATION
Address of Applicant :11 2 Ginza 4 chome Chuo ku Tokyo 1048109 Japan
(72)**Name of Inventor :**
1)UEDA Yoshihiro
2)MATSUMOTO Takunori

(57) Abstract :
The purpose of the present invention is to provide a highly thickening paste composition utilizing a polysaccharide which overcomes problems such as a problem that a desired viscosity cannot be achieved when the thickening paste composition is added to a liquid composition having a specific dietary salt concentration and a problem that even when the desired viscosity is achieved the resultant liquid composition remains in the mouth or cannot be swallowed easily and therefore the texture of the resultant liquid composition is deteriorated because the resultant liquid composition undergoes little change in viscosity at respective temperatures and which has a synergistically excellent thickening property. A highly thickening paste composition produced by mixing (A) xanthane gum and/or (B) locust bean gum with (C) guar gum and then mixing the component (A) or the component (B) to the resultant mixture wherein the ratio of the total amount of the components (A) and (B) to the amount of the component (C) is 95:5 to 70:30 by mass and the component (A) is contained in a larger amount than the component (B).

No. of Pages : 27 No. of Claims : 5

(12) PATENT APPLICATION PUBLICATION
(19) INDIA
(22) Date of filing of Application :24/03/2013
(21) Application No.1034/MUM/2013 A
(43) Publication Date : 08/05/2015

(54) Title of the invention : EXTENDED RELEASE DOSAGE FORMS OF QUETIAPINE SALTS.

(51) International classification	:A61K 9/00, A61k31/00
(31) Priority Document No	:NA
(32) Priority Date	:NA
(33) Name of priority country	:NA
(86) International Application No	:NA
Filing Date	:NA
(87) International Publication No	: NA
(61) Patent of Addition to Application Number	:NA
Filing Date	:NA
(62) Divisional to Application Number	:NA
Filing Date	:NA

(71)**Name of Applicant :**
1)PATEL TUSHAR MAHENDRABHAI
Address of Applicant :2, RANNAPARK SOCIETY, FIRST FLOOR, PART-I, GHATLODIYA ROAD, AHMEDABAD Gujarat India
(72)**Name of Inventor :**
1)PATEL TUSHAR MAHENDRABHAI
2)DR. MUKESH CHHAGANLAL GOHEL

(57) Abstract :
The present invention relates to an extended release dosage form weakly basic drugs. Particularly the present invention is related to an extended release dosage form of quetiapine or pharmaceutically acceptable salts thereof.

No. of Pages : 24 No. of Claims : 10

(12) PATENT APPLICATION PUBLICATION
(21) Application No.1090/MUM/2013 A
(19) INDIA
(22) Date of filing of Application :25/03/2013
(43) Publication Date : 08/05/2015

(54) Title of the invention : A FUEL FILLING RECEPTACLE HOLDING ASSEMBLY OF A VEHICLE

(51) International classification	:B60K15/05, B62D25/24
(31) Priority Document No	:NA
(32) Priority Date	:NA
(33) Name of priority country	:NA
(86) International Application No	:NA
Filing Date	:NA
(87) International Publication No	: NA
(61) Patent of Addition to Application Number	:NA
Filing Date	:NA
(62) Divisional to Application Number	:NA
Filing Date	:NA

(71)**Name of Applicant :**
1)TATA MOTORS LIMITED
Address of Applicant :Bombay House, 24 Homi Mody Street, Hutatma Chowk, Mumbai 400 001, Maharashtra, India.
(72)**Name of Inventor :**
1)Vijay Pandurang Bagade
2)Anurag Gaur

(57) Abstract :
The present disclosure provides a fuel filling receptacle holding assembly of a vehicle. The assembly comprises: a filler cup of predetermined shape, wherein rear end of the filler cup is connectable to an inner panel of a vehicle body, and front end of the filler cup is connectable to outer panel of the vehicle body. The filler cup comprises: at least one provision in the rear end of the filler cup for accommodating a fuel receptacle holder. Further, the filler cup comprises a contoured profile on peripheral circumference of the front end of the filler cup, wherein the contoured profile abuts against the outer panel of the vehicle body.

No. of Pages : 19 No. of Claims : 11

(12) PATENT APPLICATION PUBLICATION
(19) INDIA
(22) Date of filing of Application :26/03/2013
(21) Application No.1140/MUM/2013 A
(43) Publication Date : 08/05/2015

(54) Title of the invention : JACKING BRACKET

(51) International classification	:B66F3/00, B66F3/12
(31) Priority Document No	:NA
(32) Priority Date	:NA
(33) Name of priority country	:NA
(86) International Application No	:NA
Filing Date	:NA
(87) International Publication No	: NA
(61) Patent of Addition to Application Number	:NA
Filing Date	:NA
(62) Divisional to Application Number	:NA
Filing Date	:NA

(71)**Name of Applicant :**
1)TATA MOTORS LIMITED
Address of Applicant :BOMBAY HOUSE, 24 HOMI MODY STREET, HUTATMA CHOWK, MUMBAI 400 001, MAHARASHTRA, INDIA.
(72)**Name of Inventor :**
1)RATHOD AMIT B
2)KURKURE CHETAN B
3)SALUNKE DNYANESHWAR N
4)CHOUTHAI ABHAY C

(57) Abstract :
THE DISCLOSURE RELATES TO A JACKING BRACKET COMPRISING: A BASE PLATE HAVING A FIRST PLANER PORTION AND A SECOND PORTION ADJACENT TO THE FIRST PORTION; A PLURALITY OF THROUGH HOLES PROVIDED ON THE BASE PLATE TO ENABLE MOUNTING OF THE BASE PLATE TO AN AXLE BEAM; AND A SET OF TABS EXTENDING FROM THE SECOND PORTION OF THE BASE PLATE; EACH TAB OF THE SET OF TABS HAVING A THROUGH HOLES FOR ENABLING MOUNTING OF THE BASE PLATE TO A SHOCK ABSORBER.

No. of Pages : 12 No. of Claims : 7

(12) PATENT APPLICATION PUBLICATION
(19) INDIA
(22) Date of filing of Application :28/07/2014
(21) Application No.1514/MUMNP/2014 A
(43) Publication Date : 08/05/2015

(54) Title of the invention : STRUCTURE AND METHOD FOR STRAIN RELIEVED TSV

(51) International classification :H01L21/768,H01L23/48
(31) Priority Document No :13/405600
(32) Priority Date :27/02/2012
(33) Name of priority country :U.S.A.
(86) International Application No :PCT/US2013/027729
Filing Date :26/02/2013
(87) International Publication No :WO 2013/130425
(61) Patent of Addition to Application Number :NA
Filing Date :NA
(62) Divisional to Application Number :NA
Filing Date :NA

(71)**Name of Applicant :**
1)QUALCOMM INCORPORATED
Address of Applicant :Attn: International IP Administration 5775 Morehouse Drive San Diego California 92121 U.S.A..
(72)**Name of Inventor :**
1)RAMACHANDRAN Vidhya
2)GU Shiqun

(57) Abstract :
A semiconductor die including strain relief for through substrate vias (TSVs). The semiconductor die includes a semiconductor substrate having an active face. The semiconductor substrate includes conductive layers connected to the active face. The semiconductor die also includes a through substrate via extending only through the substrate. The through substrate via may include a substantially constant diameter through a length of the through substrate via. The through substrate via may be filled with a conductive filler material. The semiconductor die also includes an isolation layer surrounding the through substrate via. The isolation layer may include two portions: a recessed portion near the active face of the substrate capable of relieving stress from the conductive filler material and a dielectric portion. A composition of the recessed portion may differ from the dielectric portion.

No. of Pages : 37 No. of Claims : 17

(12) PATENT APPLICATION PUBLICATION
(19) INDIA
(22) Date of filing of Application :05/08/2014
(21) Application No.1580/MUMNP/2014 A
(43) Publication Date : 08/05/2015

(54) Title of the invention : SYSTEM AND METHOD FOR DENSELY PACKED EASILY TRANSPORTABLE MOBILE STRUCTURES

(51) International classification :E04B1/343,B65D88/58
(31) Priority Document No :61/585259
(32) Priority Date :11/01/2012
(33) Name of priority country :U.S.A.
(86) International Application No :PCT/IB2013/050216
Filing Date :10/01/2013
(87) International Publication No :WO 2013/105044
(61) Patent of Addition to Application Number :NA
Filing Date :NA
(62) Divisional to Application Number :NA
Filing Date :NA

(71)**Name of Applicant :**
1)SHALEV Shaul
Address of Applicant :4 Hamitnahalim St. 56905 GY Savyon Israel
(72)**Name of Inventor :**
1)SHALEV Shaul

(57) Abstract :
It is disclosed a densely packable sequential series of external housing units associated with succeeding internal housing units. The external housing units have inside volume and openings for receiving the internal housing unit. Means for facilitating the displacement of an internal unit out of an external unit like integrated bearings integrated wheels integrated retractable wheels and a low friction coating are installed on an inside shells of the associated external housing unit on an outside shells of the internal housing unit. The housing units have a uniform cross section along a majority of one of the dimensions of the unit having outlines like a circle a triangular frame a rectangular frame a circular arc of a trapezoidal frame a polygon of five six or more edges a hyperbolic arc and a parabolic arc or other types of arches. The typical transverse linear size of an internal unit is 80% to 99% of the preceding external unit. The series is transportable as a single cargo item between locations. A shell of an housing unit may include at least one layer like highly insulating layer anti ballistic layer and composite materials such as fiberglass reinforced plastic layer polymer metal composite layer and carbon based composite materials.

No. of Pages : 34 No. of Claims : 20

(12) PATENT APPLICATION PUBLICATION
(19) INDIA
(22) Date of filing of Application :28/05/2014
(21) Application No.1042/MUMNP/2014 A
(43) Publication Date : 08/05/2015

(54) Title of the invention : APPARATUS AND METHOD FOR ENGINE BACKPRESSURE REDUCTION

(51) International classification :B01D53/92,B01D53/86,F01N3/20
(31) Priority Document No :61/673394
(32) Priority Date :19/07/2012
(33) Name of priority country :U.S.A.
(86) International Application No :PCT/CA2013/000663
Filing Date :19/07/2013
(87) International Publication No :WO 2014/012174
(61) Patent of Addition to Application Number :NA
Filing Date :NA
(62) Divisional to Application Number :NA
Filing Date :NA

(71)**Name of Applicant :**
1)VIDA HOLDINGS CORP. LTD.
Address of Applicant :68 Clover Leaf Street Woodbridge Ontario L4L 5H3 Canada
(72)**Name of Inventor :**
1)PLATI Stefano
2)BLAGOJEVIC Voislav
3)KOYANAGI Gregory Klyoshi

(57) Abstract :
An improved catalytic substrate for use with a can in an automotive exhaust system the substrate being of the type which is disposed in use in the can the improvement comprising: an insulation material thermally separating the substrate into a central zone and a tubular outer zone surrounding the central zone the insulation material central zone and outer zone collectively defining a modified substrate the insulation material being adapted such that in an operating condition the temperature difference across the insulation material is at least 25°C.

No. of Pages : 54 No. of Claims : 22

(12) PATENT APPLICATION PUBLICATION
(19) INDIA
(22) Date of filing of Application :26/07/2014
(21) Application No.1510/MUMNP/2014 A
(43) Publication Date : 08/05/2015

(54) Title of the invention : AURORA AND FLT3 KINASES MODULATORS

(51) International classification :C07D413/14,A61K31/496,A61P35/00
(31) Priority Document No :1202027.7
(32) Priority Date :06/02/2012
(33) Name of priority country :U.K.
(86) International Application No :PCT/EP2013/052182
Filing Date :04/02/2013
(87) International Publication No :WO 2013/117522
(61) Patent of Addition to Application Number :NA
Filing Date :NA
(62) Divisional to Application Number :NA
Filing Date :NA

(71)**Name of Applicant :**
1)SAREUM LIMITED
Address of Applicant :Unit 2A Langford Arch London Road Pampisford Cambridge Cambridgeshire CB22 3FX U.K
(72)**Name of Inventor :**
1)READER John Charles

(57) Abstract :
The invention provides a compound having the formula (1) useful as modulator of the activity of Aurora kinases and FLT3 kinases: and salts thereof; wherein: R is hydrogen or C alkyl; and R R and R are the same or different and each is selected from hydrogen C alkyl fluorine chlorine C alkoxy and trifluoromethyl provided that no more than two of R R and R are other than hydrogen. Also provided are pharmaceutical compositions containing the compounds and their use in medicine and in particular in the treatment of cancer.

No. of Pages : 74 No. of Claims : 12

(12) PATENT APPLICATION PUBLICATION
(19) INDIA
(22) Date of filing of Application :26/07/2014
(21) Application No.1511/MUMNP/2014 A
(43) Publication Date : 08/05/2015

(54) Title of the invention : METHOD FOR PERFORMING MECHANICAL CHEMICAL AND/OR THERMAL PROCESSES

(51) International classification :B01J19/18,C08G63/08,C08G63/78
(31) Priority Document No :10 2012 101 087.0
(32) Priority Date :10/02/2012
(33) Name of priority country :Germany
(86) International Application No :PCT/EP2013/052498
Filing Date :08/02/2013
(87) International Publication No :WO 2013/117677
(61) Patent of Addition to Application Number :NA
Filing Date :NA
(62) Divisional to Application Number :NA
Filing Date :NA

(71)**Name of Applicant :**
1)LIST HOLDING AG
Address of Applicant :24 Berstelstrasse CH 4422 Arisdorf Switzerland
(72)**Name of Inventor :**
1)WITTE Daniel

(57) Abstract :
In the method for performing mechanical chemical and/or thermal processes in a reactant and/or product in a housing that has at least one feed point at least one catalyst is mixed into the reactant as a result of which the product reacts up to a desired degree of conversion. In this process the reactant is mixed with the catalyst before being introduced into the housing.

No. of Pages : 12 No. of Claims : 10

(12) PATENT APPLICATION PUBLICATION
(21) Application No.1584/MUMNP/2014 A
(19) INDIA
(22) Date of filing of Application :06/08/2014
(43) Publication Date : 08/05/2015

(54) Title of the invention : ANCHORING DEVICE AND SYSTEM FOR AN INTERVERTEBRAL IMPLANT INTERVERTEBRAL IMPLANT AND IMPLANTATION INSTRUMENT

(51) International classification :A61F2/44
(31) Priority Document No :1251733
(32) Priority Date :24/02/2012
(33) Name of priority country :France
(86) International Application No :PCT/EP2013/053622
Filing Date :22/02/2013
(87) International Publication No :WO 2013/124453
(61) Patent of Addition to Application Number :NA
Filing Date :NA
(62) Divisional to Application Number :NA
Filing Date :NA

(71)**Name of Applicant :**
1)LDR MEDICAL
Address of Applicant :4 rue Gustave Eiffel H´tel de bureaux F 10430 ROSIERES PRES TROYES France
(72)**Name of Inventor :**
1)CHATAIGNER Herv
2)CHEBUHAR Craig
3)DINVILLE Herv
4)BOUGERE Emmanuel

(57) Abstract :
The present invention relates to various embodiments of anchoring devices for intervertebral implants intervertebral implant and implantation of instrumentation sharing the characteristic to cooperate with the anchoring device (1) comprising a body comprising at least one curve rigid plate (10) elongated along a longitudinal axis (L) so that its front end enters at least one vertebra while its rear end remains in the passage (21) of the implant (2) by pressing said implant (2) against said vertebra with at least one retaining stop (14) the device (1) being characterized in that the plate (10) comprises at least one longitudinal slot (11) separating at least one posterior portion of the plate (10) into two branches (12 13) which at least one comprises at least one withdrawal stop (15) configured to retain the device (1) in the implant (2).

No. of Pages : 78 No. of Claims : 38

(12) PATENT APPLICATION PUBLICATION
(19) INDIA
(22) Date of filing of Application :06/08/2014
(21) Application No.1585/MUMNP/2014 A
(43) Publication Date : 08/05/2015

(54) Title of the invention : METHOD AND DEVICE FOR MULTIMODAL NEUROLOGICAL EVALUATION

(51) International classification :A61B5/0476
(31) Priority Document No :13/352618
(32) Priority Date :18/01/2012
(33) Name of priority country :U.S.A.
(86) International Application No :PCT/US2013/021387
Filing Date :14/01/2013
(87) International Publication No :WO 2013/109492
(61) Patent of Addition to Application Number :NA
Filing Date :NA
(62) Divisional to Application Number :NA
Filing Date :NA

(71)**Name of Applicant :**
1)BRAINSCOPE COMPANY INC.
Address of Applicant :4350 East West Highway Suite 1050 Bethesda MARYLAND 20814 4481, USA
2)ROTHMAN, Neil, S.
(72)**Name of Inventor :**
1)ROTHMAN Neil S.

(57) Abstract :
A method of building classifiers for multimodal neurological assessment is described. The method comprises the steps of extracting quantitative features from a plurality of physiological and neurocognitive assessments and selecting a subset of features from the extracted pool of features to construct multimodal classifiers. A device for performing point of care multimodal neurological assessment is also described.

No. of Pages : 33 No. of Claims : 49

(12) PATENT APPLICATION PUBLICATION
(21) Application No.1107/MUM/2013 A
(19) INDIA
(22) Date of filing of Application :25/03/2013
(43) Publication Date : 08/05/2015

(54) Title of the invention : PAYLOAD DEPENDENT SPRING DAMPER ASSEMBLY

(51) International classification	:F16F15/02	(71)**Name of Applicant :**
(31) Priority Document No	:NA	**1)TATA MOTORS LIMITED**
(32) Priority Date	:NA	Address of Applicant :Bombay House, 24 Homi Mody Street,
(33) Name of priority country	:NA	Hutatma Chowk, Mumbai 400 001, Maharashtra, India
(86) International Application No	:NA	(72)**Name of Inventor :**
Filing Date	:NA	**1)KATYAYAN SINHA**
(87) International Publication No	: NA	**2)NAVAL KAVTHEKAR**
(61) Patent of Addition to Application Number	:NA	**3)MAHENDRA D. WAJDE**
Filing Date	:NA	
(62) Divisional to Application Number	:NA	
Filing Date	:NA	

(57) Abstract :
The present disclosure relates to Adaptive damper assembly (100) mechanism for a bin (14). The assembly comprising a damper assembly (1), a link assembly (17) and a feedback assembly (8). The damper assembly (1) consists of a tube (2) within which at least one first spring (6) and a hollow member (3) is enclosed. Within the hollow member (3), at least one second spring (5) and a piston member (4) is enclosed. A second cord (10) attached to the piston member (4) and link assembly (17) pulls the piston member (4) provided within the hollow member (3) when the bin (14) is loaded. The first cord (11) is fixed to one end of the hollow member (3), which pulls the hollow member (3) in a direction opposite to the movement of the piston member (4) provided within the hollow member (3).

No. of Pages : 18 No. of Claims : 13

(12) PATENT APPLICATION PUBLICATION
(19) INDIA
(22) Date of filing of Application :30/07/2014
(21) Application No.1529/MUMNP/2014 A
(43) Publication Date : 08/05/2015

(54) Title of the invention : METHODS AND APPARATUS FOR ENABLING NON DESTAGGERED CHANNEL ESTIMATION

(51) International classification :H04L25/02
(31) Priority Document No :61/609167
(32) Priority Date :09/03/2012
(33) Name of priority country :U.S.A.
(86) International Application No :PCT/US2013/029755
Filing Date :08/03/2013
(87) International Publication No :WO 2013/134588
(61) Patent of Addition to Application Number :NA
Filing Date :NA
(62) Divisional to Application Number :NA
Filing Date :NA

(71)**Name of Applicant :**
1)QUALCOMM INCORPORATED
Address of Applicant :ATTN: International IP Administration 5775 Morehouse Drive San Diego California 92121 1714 U.S.A.
(72)**Name of Inventor :**
1)YUAN Rebecca Wen Ling
2)CHALLA Raghu N.
3)YU Yuanning
4)MCCLOUD Michael L.

(57) Abstract :
Aspects of the present disclosure generally relate to wireless communications and more particularly to performing channel estimation with modifications for improved system performance. Aspects generally include receiving at a user equipment (UE) reference signals from a base station in a current subframe and performing channel estimation wherein the channel estimation is based at least in part on the reference signals received in the current subframe a mobility characteristic of the UE and a configuration of subframes prior to the current subframe..

No. of Pages : 43 No. of Claims : 36

(12) PATENT APPLICATION PUBLICATION
(19) INDIA
(22) Date of filing of Application :30/07/2014
(21) Application No.1530/MUMNP/2014 A
(43) Publication Date : 08/05/2015

(54) Title of the invention : A SKIN LIGHTENING COMPOSITION

(51) International classification	:A61K8/60,A61Q19/02,C12N15/113
(31) Priority Document No	:390/MUM/2012
(32) Priority Date	:13/02/2012
(33) Name of priority country	:India
(86) International Application No	:PCT/EP2013/052211
Filing Date	:05/02/2013
(87) International Publication No	:WO 2013/120726
(61) Patent of Addition to Application Number	:NA
Filing Date	:NA
(62) Divisional to Application Number	:NA
Filing Date	:NA

(71)**Name of Applicant :**
1)UNILEVER PLC
Address of Applicant :a company registered in England and Wales under company no. 41424 of Unilever House 100 Victoria Embankment London Greater London EC4Y 0DY U.K.
(72)**Name of Inventor :**
1)BANDI Babu Rakesh Kumar
2)CHAKRABORTTY Amit
3)CHANDRAMOWLI Ganesh
4)DAMODARAN Anita
5)JULIET Maria
6)NAIR Nirmala
7)SAHA Subarna
8)VORA Shilpa Atul

(57) Abstract :
The present invention relates to a skin lightening composition and a method of lightening skin. The skin lightening is achieved using siRNA oligonucleotides which are able to achieve this using much lower concentration as compared to known chemical actives.

No. of Pages : 18 No. of Claims : 7

(12) PATENT APPLICATION PUBLICATION
(21) Application No.1597/MUMNP/2014 A
(19) INDIA
(22) Date of filing of Application :06/08/2014
(43) Publication Date : 08/05/2015

(54) Title of the invention : SECONDARY COLD ROLLED SHADOW MASK STEEL STRIP AND MANUFACTURING METHOD THEREOF

(51) International classification :C22C38/06
(31) Priority Document No :201210219534.4
(32) Priority Date :28/06/2012
(33) Name of priority country :China
(86) International Application No :PCT/CN2013/075785
Filing Date :17/05/2013
(87) International Publication No :WO 2014/000528
(61) Patent of Addition to Application Number :NA
Filing Date :NA
(62) Divisional to Application Number :NA
Filing Date :NA

(71)**Name of Applicant :**
1)BAOSHAN IRON & STEEL CO. LTD.
Address of Applicant :No.885 Fujin Road Baoshan District Shanghai 201900 China
(72)**Name of Inventor :**
1)WU Shoumin
2)LI Xiujun

(57) Abstract :
A secondary cold rolled shadow mask steel strip and manufacturing method thereof comprising following processes: converter steelmaking continuous casting hot rolling pickled cold rolling continuous annealing secondary cold rolling and finishing and oil removal. Mass percentages of various main elements of the obtained shadow mask steel strip are: C=0.001% Mn 0.10 0.40% Al:0.02 0.06% Si=0.025% P=0.015% S=0.01% O=0.004%. Allowance is Fe and inevitable foreign substance. Through composition design on various elements in one aspect a weight percentage of carbon is controlled within a low content range and in the other aspect a decarburizing annealing process is omitted and a temperature of the continuous annealing is decreased shortening a production cycle and reducing production costs; through optimization of a secondary cold rolling process parameter and processing method degreasing and leveling processes are not needed and at the same time steel materials with excellent material performance and high surface quality are obtained.

No. of Pages : 19 No. of Claims : 17

(12) PATENT APPLICATION PUBLICATION
(19) INDIA
(22) Date of filing of Application :30/07/2014
(21) Application No.1525/MUMNP/2014 A
(43) Publication Date : 08/05/2015

(54) Title of the invention : CONNECTOR WITH PROJECTIONS OF CONICAL OR SEMI CONICAL SECTION

(51) International classification :E04B2/86,E04C5/16,E04C5/065
(31) Priority Document No :TO2011A001250
(32) Priority Date :31/12/2011
(33) Name of priority country :Italy
(86) International Application No :PCT/IT2012/000407
Filing Date :31/12/2012
(87) International Publication No:WO 2014/041572
(61) Patent of Addition to Application Number :NA
Filing Date :NA
(62) Divisional to Application Number :NA
Filing Date :NA

(71)**Name of Applicant :**
1)CABONI Michele
Address of Applicant :Via Adua 55 I 09170 Oristano Italy Italy
(72)**Name of Inventor :**
1)CABONI Michele

(57) Abstract :
A connector (1) with conical or semi conical section with a pitch variable geometry for building structures is described. A building structure obtained with a plurality of such connectors (1) is also described.

No. of Pages : 34 No. of Claims : 23

(12) PATENT APPLICATION PUBLICATION
(19) INDIA
(22) Date of filing of Application :06/08/2014
(21) Application No.1586/MUMNP/2014 A
(43) Publication Date : 08/05/2015

(54) Title of the invention : FLUID CONDUIT SYSTEMS

(51) International classification :F28D7/12
(31) Priority Document No :61/594361
(32) Priority Date :02/02/2012
(33) Name of priority country :U.S.A.
(86) International Application No :PCT/IL2013/000011
Filing Date :03/02/2013
(87) International Publication No :WO 2013/114352
(61) Patent of Addition to Application Number :NA
Filing Date :NA
(62) Divisional to Application Number :NA
Filing Date :NA

(71)**Name of Applicant :**
1)HELIOFOCUS LTD.
Address of Applicant :7 Golda Meir St. Ness Ziona 74036, Israel
(72)**Name of Inventor :**
1)MANDELBERG Eli
2)CAFRI Hagay
3)GADOT.Oren Michael
4)BLUMENTHAL Yanir
5)BRUDO Haim

(57) Abstract :
A fluid conduit system including a central fluid channel having an entrance for a working fluid flowing in a first direction at one end and an exit for the working fluid at an opposite end a circumferential fluid channel surrounding the central fluid channel adapted for receiving the working fluid exiting the central fluid channel and directing the working fluid in a second direction opposite the first direction at least one device positioned in the central fluid channel for having the working fluid flow therethrough and fluid communication between 1he device and outside the circumferential fluid channel wherein thermal energy supplied by the working fluid is used by a thermal energy consumption system.

No. of Pages : 50 No. of Claims : 49

(12) PATENT APPLICATION PUBLICATION
(19) INDIA
(22) Date of filing of Application :06/08/2014
(21) Application No.1587/MUMNP/2014 A
(43) Publication Date : 08/05/2015

(54) Title of the invention : VIBRATION DAMPER FOR SENSOR HOUSING

(51) International classification :G01K1/26,G01K1/08,G01K7/16
(31) Priority Document No :13/458303
(32) Priority Date :27/04/2012
(33) Name of priority country :U.S.A.
(86) International Application No :PCT/US2013/034089
Filing Date :27/03/2013
(87) International Publication No:WO 2013/162813
(61) Patent of Addition to Application Number :NA
Filing Date :NA
(62) Divisional to Application Number :NA
Filing Date :NA

(71)**Name of Applicant :**
1)ROSEMOUNT INC.
Address of Applicant :8200 Market Blvd. Chanhassen Minnesota 55317 U.S.A.
(72)**Name of Inventor :**
1)WIKLUND David Eugene

(57) Abstract :
A sensor probe comprises a tube a sensor element and an absorber mass. The tube is for placement in a process fluid flow within a fluid conduit and comprises a first end for coupling to the fluid conduit and a second end for insertion into the process fluid flow. The sensor element is in communication with the tube. The absorber mass is coupled to the tube and is configured to dampen vibration of the tube when inserted in the process fluid flow.

No. of Pages : 29 No. of Claims : 31

(12) PATENT APPLICATION PUBLICATION
(19) INDIA
(22) Date of filing of Application :06/08/2014
(21) Application No.1588/MUMNP/2014 A
(43) Publication Date : 08/05/2015

(54) Title of the invention : MULTIPLE CODING MODE SIGNAL CLASSIFICATION

(51) International classification :G10L19/20
(31) Priority Document No :61/586374
(32) Priority Date :13/01/2012
(33) Name of priority country :U.S.A.
(86) International Application No :PCT/US2012/071217
Filing Date :21/12/2012
(87) International Publication No :WO 2013/106192
(61) Patent of Addition to Application Number :NA
Filing Date :NA
(62) Divisional to Application Number :NA
Filing Date :NA

(71)**Name of Applicant :**
1)QUALCOMM INCORPORATED
Address of Applicant :ATTN: International IP Administration 5775 Morehouse Drive San Diego California 92121 U.S.A..
(72)**Name of Inventor :**
1)ATTI Venkatraman Srinivasa
2)DUNI Ethan Robert

(57) Abstract :
Improved audio classification is provided for encoding applications. An initial classification is performed followed by a finer classification to produce speech classifications and music classifications with higher accuracy and less complexity than previously available. Audio is classified as speech or music on a frame by frame basis. If the frame is classified as music by the initial classification that frame undergoes a second finer classification to confirm that the frame is music and not speech (e.g. speech that is tonal and/or structured that may not have been classified as speech by the initial classification). Depending on the implementation one or more parameters may be used in the finer classification. Example parameters include voicing modified correlation signal activity and long term pitch gain.

No. of Pages : 33 No. of Claims : 50

(12) PATENT APPLICATION PUBLICATION
(19) INDIA
(22) Date of filing of Application :06/08/2014
(21) Application No.1589/MUMNP/2014 A
(43) Publication Date : 08/05/2015

(54) Title of the invention : METHOD AND APPARATUS FOR MANAGING MOBILITY EVENTS IN A DUAL FREQUENCY DUAL CELL WIRELESS COMMUNICATION NETWORK

(51) International classification :H04W72/04
(31) Priority Document No :61/586676
(32) Priority Date :13/01/2012
(33) Name of priority country :U.S.A.
(86) International Application No :PCT/US2013/021175
Filing Date :11/01/2013
(87) International Publication No :WO 2013/106670
(61) Patent of Addition to Application Number :NA
Filing Date :NA
(62) Divisional to Application Number :NA
Filing Date :NA

(71)**Name of Applicant :**
1)QUALCOMM INCORPORATED
Address of Applicant :Attn: International IP Administration 5775 Morehouse Drive San Diego California 92121 U.S.A..
(72)**Name of Inventor :**
1)SUN Haitong
2)WANG Beibei
3)SAMBHWANI Sharad Deepak
4)KAPOOR Rohit

(57) Abstract :
A method operable at a user equipment configured for wireless communication over a dual frequency dual cell network is disclosed includes a primary carrier and a secondary carrier. The method includes maintaining an active set corresponding to the primary carrier; maintaining a virtual active set corresponding to the secondary carrier; and transmitting a control signal including a virtual mobility event corresponding to a change in the virtual active set. An apparatus for performing the method is also disclosed.

No. of Pages : 45 No. of Claims : 48

(12) PATENT APPLICATION PUBLICATION
(19) INDIA
(22) Date of filing of Application :30/07/2014
(21) Application No.1533/MUMNP/2014 A
(43) Publication Date : 08/05/2015

(54) Title of the invention : NOVEL THERAPEUTIC AGENTS

(51) International classification :C07D235/30,A61K31/4184,C07D235/14
(31) Priority Document No :61/593459
(32) Priority Date :01/02/2012
(33) Name of priority country :U.S.A.
(86) International Application No :PCT/EP2013/051944
Filing Date :31/01/2013
(87) International Publication No :WO 2013/113838
(61) Patent of Addition to Application Number :NA
Filing Date :NA
(62) Divisional to Application Number :NA
Filing Date :NA

(71)**Name of Applicant :**
1)EURO CELTIQUE S.A.
Address of Applicant :2 avenue Charles de Gaulle L 1653 Luxembourg
(72)**Name of Inventor :**
1)CHEN Yu
2)CHEN Yi

(57) Abstract :
The present invention relates to a class of hydroxamic acid compounds of Formula (I) which act as alkylating agents and/or inhibitors of the HDAC pathway having potential utility in the treatment of a neoplastic disease and immune diseases.

No. of Pages : 45 No. of Claims : 21

(12) PATENT APPLICATION PUBLICATION
(21) Application No.1593/MUMNP/2014 A
(19) INDIA
(22) Date of filing of Application :06/08/2014
(43) Publication Date : 08/05/2015

(54) Title of the invention : FREQUENCY SCAN METHOD FOR DETERMINING THE SYSTEM CENTER FREQUENCY FOR LTE TDD

(51) International classification :H04W48/16
(31) Priority Document No :61/606340
(32) Priority Date :02/03/2012
(33) Name of priority country :U.S.A.
(86) International Application No :PCT/US2013/028674
Filing Date :01/03/2013
(87) International Publication No :WO 2013/131006
(61) Patent of Addition to Application Number :NA
Filing Date :NA
(62) Divisional to Application Number :NA
Filing Date :NA

(71)**Name of Applicant :**
1)QUALCOMM INCORPORATED
Address of Applicant :Attn: International Ip Administration 5775 Morehouse Drive San Diego CA 92121 1714 U.S.A..
(72)**Name of Inventor :**
1)XU Huilin
2)CHALLA Raghu Narayan
3)MAHMOUD Hisham A.

(57) Abstract :
A method an apparatus and a computer program product for wireless communication are provided in which a set of time intervals is obtained from a received radio frequency signal. A power profile is determined for a frequency spectrum segment in each time interval. A first list is used to identify frequency spectrum segments that exhibit a power or energy profile over a range of frequencies associated with a downlink channel bandwidth and a second list is used to identify frequency spectrum segments that have a total or average energy greater than a threshold energy relative to a noise floor. An absolute radio frequency channel number (ARFCN) of a wireless communication system is determined based on the frequency spectrum segments identified in the first and second lists.

No. of Pages : 50 No. of Claims : 44

(12) PATENT APPLICATION PUBLICATION
(19) INDIA
(22) Date of filing of Application :06/08/2014
(21) Application No.1594/MUMNP/2014 A
(43) Publication Date : 08/05/2015

(54) Title of the invention : MTB C VACCINE AGAINST ASTHMA

(51) International classification :A61K39/00,A61K39/04,A61K39/35
(31) Priority Document No :NA
(32) Priority Date :NA
(33) Name of priority country :NA
(86) International Application No :PCT/IB2012/000353
Filing Date :12/01/2012
(87) International Publication No :WO 2013/104943
(61) Patent of Addition to Application Number :NA
Filing Date :NA
(62) Divisional to Application Number :NA
Filing Date :NA

(71)**Name of Applicant :**
1)ARCHIVEL FARMA S.L.
Address of Applicant :C/ Fogars de Tordera 61 08916 Badalona (Barcelona) Spain
(72)**Name of Inventor :**
1)CARDONA IGLESIAS Pere Joan
2)AMAT RIERA Isabel
3)REYES MORENO Blanca
4)AMAT FABREGAT Maria Merc¨

(57) Abstract :
The invention relates to an agent for the treatment or prevention of an allergic condition such as asthma in a mammal. The agent comprises fragments of a complex (MTB C) strain. These particular fragments may be from a virulent MTB C strain and/or in the form of a liposome composition. The agent may include further components such as a liposome forming agent and/or particular proteins from the MTB C strain. A particular allergic response that may be treated by the agent of the invention is allergic asthma. A pharmaceutical composition comprising the agent is also provided. Administration of the agent described herein significantly attenuates airway hyperresponsiveness eosinophilia and lymphocytosis in the airways of sensitized animals. The effectiveness of the agent exceeds on all the evaluated parameters the commercial vaccine BCG Danish 1331 Strain.

No. of Pages : 66 No. of Claims : 35

(12) PATENT APPLICATION PUBLICATION
(19) INDIA
(22) Date of filing of Application :06/08/2014
(21) Application No.1595/MUMNP/2014 A
(43) Publication Date : 08/05/2015

(54) Title of the invention : MINERAL MATERIAL POWDER WITH HIGH DISPERSION ABILITY AND USE OF SAID MINERAL MATERIAL POWDER

(51) International classification :C09C1/02,D21H17/00,C09C3/04
(31) Priority Document No :12156090.8
(32) Priority Date :17/02/2012
(33) Name of priority country :EPO
(86) International Application No :PCT/EP2013/052940
Filing Date :14/02/2013
(87) International Publication No :WO 2013/120934
(61) Patent of Addition to Application Number :NA
Filing Date :NA
(62) Divisional to Application Number :NA
Filing Date :NA

(71)**Name of Applicant :**
1)OMYA INTERNATIONAL AG
Address of Applicant :Baslerstrasse 42 CH 4665 Oftringen Switzerland
(72)**Name of Inventor :**
1)BLANCHARD Pierre
2)ELGOYHEN Jean Pierre
3)KARTH Beat
4)MLLER Holger
5)SPEHN J¼rgen
6)BRUNNER Martin
7)GONNON Pascal
8)TINKL Michael

(57) Abstract :
The present invention refers to a mineral matter powder preparation by wet process without acrylic additive or other grinding aid additives and to the use of said mineral matter after an optional hydrophobic treatment. Said mineral material having superior dispersing properties.

No. of Pages : 55 No. of Claims : 31

(12) PATENT APPLICATION PUBLICATION
(19) INDIA
(22) Date of filing of Application :06/08/2014
(21) Application No.1596/MUMNP/2014 A
(43) Publication Date : 08/05/2015

(54) Title of the invention : COMPUTERIZED INTERNET SEARCH SYSTEM AND METHOD

(51) International classification :G06F3/00,G06F9/44
(31) Priority Document No :61/614163
(32) Priority Date :22/03/2012
(33) Name of priority country :U.S.A.
(86) International Application No :PCT/US2013/033430
Filing Date :22/03/2013
(87) International Publication No :WO 2013/142759
(61) Patent of Addition to Application Number :NA
Filing Date :NA
(62) Divisional to Application Number :NA
Filing Date :NA

(71)**Name of Applicant :**
1)TTWICK INC.
Address of Applicant :460 Park Avenue South 12th Floor New York NY 10016 U.S.A.
(72)**Name of Inventor :**
1)VOELLMER Ralf
2)SANCHEZ Luis

(57) Abstract :
The present invention provides a system and method that can search social media and Internet websites and can analyze and display the results according to a variety of criteria including virality on social media websites. The results are presented in a user friendly format such as a magazine newsletter newspaper or scrapbook.

No. of Pages : 57 No. of Claims : 80

(12) PATENT APPLICATION PUBLICATION
(19) INDIA
(22) Date of filing of Application :04/08/2014
(21) Application No.1572/MUMNP/2014 A
(43) Publication Date : 08/05/2015

(54) Title of the invention : APPARATUS AND METHOD FOR AUTOMATICALLY ANALYZING BIOLOGICAL SAMPLES

(51) International classification :C12Q1/68,C12M1/38,C12M1/12
(31) Priority Document No :1020120013757
(32) Priority Date :10/02/2012
(33) Name of priority country :Republic of Korea
(86) International Application No :PCT/KR2013/000985
Filing Date :07/02/2013
(87) International Publication No :WO 2013/119049
(61) Patent of Addition to Application Number :NA
Filing Date :NA
(62) Divisional to Application Number :NA
Filing Date :NA

(71)**Name of Applicant :**
1)BIONEER CORPORATION.
Address of Applicant :49 3 Munpyeong dong Daedeok gu Daejeon 306 220 Republic of Korea
(72)**Name of Inventor :**
1)PARK Han Oh
2)LEE Yang Won
3)KIM Jong Kab

(57) Abstract :
The present invention relates to an apparatus and method for automatically analyzing biological samples which: dissolve a biological sample in a hydrolase and cell lysate and dissolve nucleic acid in a solvent and then attach same to magnetic particles and wash same; and then ultimately wash same using an organic solvent and dry the magnetic particles using a vacuum pump; and then liquate a target nucleic acid attached to the magnetic particles in a solvent; and then apply same to a vessel including a nucleic acid based amplification reagent and mix same; and then adjust the temperature for amplification and simultaneously irradiate excitation light at a reactor and detect amplification in real time by measuring fluorescent light deactivate the amplified product by using an infrared lamp after the amplification and then acquire an image through electrophoresis; and use one apparatus for the entire process of analyzing molecular mass. Thus after mounting biological sample kits an electronically automated process can be implemented in order to perform a qualitative and quantitative inspection having a high level of accuracy and reproducibility. In particular an infrared lamp is provided having a movable function in order to concentrate radiation on an amplified product and to deactivate a genetically amplified product. Thus false positives can fundamentally be prevented.

No. of Pages : 91 No. of Claims : 42

(12) PATENT APPLICATION PUBLICATION
(19) INDIA
(22) Date of filing of Application :05/08/2014
(21) Application No.1573/MUMNP/2014 A
(43) Publication Date : 08/05/2015

(54) Title of the invention : IMPROVING DROUGHT RESISTANCE IN PLANTS: UPL3

(51) International classification :C12N15/82,A01H5/00
(31) Priority Document No :61/599961
(32) Priority Date :17/02/2012
(33) Name of priority country :U.S.A.
(86) International Application No :PCT/NL2013/050101
Filing Date :18/02/2013
(87) International Publication No :WO 2013/122472
(61) Patent of Addition to Application Number :NA
Filing Date :NA
(62) Divisional to Application Number :NA
Filing Date :NA

(71)**Name of Applicant :**
1)KEYGENE N.V.
Address of Applicant :P.O. Box 216 NL 6700 AE Wageningen Netherlands
(72)**Name of Inventor :**
1)DESLATTES MAYS Anne
2)VAN HULTEN Marieke Helena Adriana
3)DIXIT Shital Anilkumar
4)BLOM Evert Jan
5)MUNKVOLD Jesse David
6)DILEO Matthew Vitabile
7)DE VOS Martin

(57) Abstract :
The present invention relates to a new method for increasing drought resistance of a plant. The method encompasses the impairment of the expression of a gene or genes in said plant. In comparison to a plant not manipulated to impair the expression of said gene(s) the plants display improved drought resistance. Also provided are plants and plant product that can be obtained by the method according to the invention.

No. of Pages : 82 No. of Claims : 19

(12) PATENT APPLICATION PUBLICATION
(19) INDIA
(22) Date of filing of Application :13/08/2014
(21) Application No.1625/MUMNP/2014 A
(43) Publication Date : 08/05/2015

(54) Title of the invention : CONSTANT VELOCITY JOINT

(51) International classification :F16D3/223,F16D3/2233,F16D3/2245
(31) Priority Document No :10 2012 102 678.5
(32) Priority Date :28/03/2012
(33) Name of priority country :Germany
(86) International Application No :PCT/EP2013/056441
Filing Date :26/03/2013
(87) International Publication No :WO 2013/144164
(61) Patent of Addition to Application Number :NA
Filing Date :NA
(62) Divisional to Application Number :NA
Filing Date :NA

(71)**Name of Applicant :**
1)GKN DRIVELINE INTERNATIONAL GMBH
Address of Applicant :Hauptstrae 130 53797 Lohmar Germany
(72)**Name of Inventor :**
1)HILDEBRANDT Wolfgang
2)WECKERLING Thomas
3)MAUCHER Stephan
4)CREMERIUS Rolf
5)BENNER Ida
6)POST J¼rgen
7)GREMMELMAIER Anna

(57) Abstract :
The invention relates to a constant velocity joint comprising: an outer joint part 12 with a longitudinal axis L12 and outer ball tracks 22 wherein the outer joint part 12 comprises an attachment side and an aperture side; an inner joint part 13 with a longitudinal axis L13 and inner ball tracks 23; a torque transmitting ball 14 in each pair of tracks 22 23; a ball cage 15 with cage windows 18 in which the balls 14 are held wherein in each angular position of the constant velocity joint 11 there is enclosed an opening angle d between an outer tangent T and an inner tangent T at the ball 14 wherein at least one of the pairs of tracks is designed such that inside a small articulation angle range which comprises at least the joint central plane EM in at least one joint articulation angle an opening angle d amounts to zero and that inside a larger articulation angle range an aperture side opening angle d of a ball 14 moving towards the aperture side of the outer joint part 12 and an attachment side opening angle d of a ball 14 moving at the same joint articulation angle towards the attachment side of the outer joint part 12 do not equal zero and open in the same axial direction.

No. of Pages : 50 No. of Claims : 20

(12) PATENT APPLICATION PUBLICATION
(19) INDIA
(22) Date of filing of Application :04/08/2014
(21) Application No.1563/MUMNP/2014 A
(43) Publication Date : 08/05/2015

(54) Title of the invention : LONG TERM EVOLUTON (LTE) USER EQUIPMENT RELAYS HAVING A LICENSED WIRELESS OR WIRED BACKHAUL LINK AND AN UNLICENSED ACCESS LINK

(51) International classification :H04W88/04,H04W84/04,H04W56/00
(31) Priority Document No :61/584014
(32) Priority Date :06/01/2012
(33) Name of priority country :U.S.A.
(86) International Application No :PCT/US2013/020200
Filing Date :04/01/2013
(87) International Publication No :WO 2013/103754
(61) Patent of Addition to Application Number :NA
Filing Date :NA
(62) Divisional to Application Number :NA
Filing Date :NA

(71)**Name of Applicant :**
1)QUALCOMM INCORPORATED
Address of Applicant :ATTN: International IP Administration 5775 Morehouse Drive San Diego California 92121 1714 U.S.A.
(72)**Name of Inventor :**
1)MALLADI Durga Prasad
2)WEI Yongbin
3)HORN Gavin B.
4)DAMNJANOVIC Aleksandar

(57) Abstract :
Certain aspects of the present disclosure provide methods and apparatus for employing relaying devices such as Long Term Evolution (LTE) user equipment (UE) relays having a licensed wireless or wired backhaul link and an unlicensed access link. One method generally includes receiving at a first device data from a first apparatus via a first carrier frequency in a licensed spectrum wherein the first device comprises a relaying device and relaying the data to a second apparatus via a second carrier frequency in an unlicensed spectrum. In this manner wireless communication systems with relaying devices may achieve better spectral efficiency in unlicensed access links.

No. of Pages : 42 No. of Claims : 56

(12) PATENT APPLICATION PUBLICATION
(19) INDIA
(22) Date of filing of Application :12/08/2014
(21) Application No.1623/MUMNP/2014 A
(43) Publication Date : 08/05/2015

(54) Title of the invention : BIOMEDICAL ELECTRODE ASSEMBLY

(51) International classification :A61B5/04
(31) Priority Document No :218146
(32) Priority Date :16/02/2012
(33) Name of priority country :Israel
(86) International Application No :PCT/IL2013/050105
Filing Date :04/02/2013
(87) International Publication No :WO 2013/121415
(61) Patent of Addition to Application Number :NA
Filing Date :NA
(62) Divisional to Application Number :NA
Filing Date :NA

(71)**Name of Applicant :**
1)NEW N.I. MEDICAL (2011) LTD
Address of Applicant :En Hay 3 st. 4592000 Kfar Mallal Israel
(72)**Name of Inventor :**
1)LIVNEH Aviad
2)GRANOV Evgeny
3)GRANOV Igor

(57) Abstract :
A biomedical electrode structure is presented. The electrode structure comprises a contact member having a tissue interfacing face for contacting a tissue surface and an opposite electrical coupling face; at least a first electrically conductive surface disposed within said tissue interfacing face and being configured to electrically couple to a portion of the contacted tissue; and at least two electrical connectors mounted in a spaced apart relationship on said electrical coupling face and electrically coupled to different regions of said electrically conductive surface for allowing measurement of at least one electrical property of at least a portion of said at least first electrically conductive surface residing therebetween.

No. of Pages : 30 No. of Claims : 18

(12) PATENT APPLICATION PUBLICATION
(21) Application No.1853/MUM/2013 A
(19) INDIA
(22) Date of filing of Application :24/05/2013
(43) Publication Date : 08/05/2015

(54) Title of the invention : SYSTEM AND METHOD FOR MANAGING PERSONAL & HEALTH RECORDS (E-PHR SYSTEM) OF A USER

(51) International classification	:G06Q50/00
(31) Priority Document No	:NA
(32) Priority Date	:NA
(33) Name of priority country	:NA
(86) International Application No	:NA
Filing Date	:NA
(87) International Publication No	: NA
(61) Patent of Addition to Application Number	:NA
Filing Date	:NA
(62) Divisional to Application Number	:NA
Filing Date	:NA

(71)**Name of Applicant :**
1)Dr. Navin Agrawal
Address of Applicant :Qtr no. F-1, Staff quaters, SIRTS Campus, Ayodhya By Pass Road, BHOPAL-462041 Madhya Pradesh India
2)Saurabh Khare
3)Anjali Verma
4)Vaishali Ughade Lokhande
(72)**Name of Inventor :**
1)Dr. Navin Agrawal
2)Saurabh Khare
3)Anjali Verma
4)Vaishali Ughade Lokhande

(57) Abstract :
A portable device for storing and managing medical records of a patient, that includes a data storage for storing personal and medical details of the patient, and a program stored within the data storage for installing an electronic personal health record system (e-PHRS)on a computing device upon insertion of the portable device into a universal port of the computing device, rendering a graphical user interface for the e-PHRS, providing a password protected access of the e-PHRS to a patient and at least one medical entity associated with the patient, enabling the patient to store their personal details in the data storage, enabling a medical entity to store a medical record of the patient in the data storage, collating and displaying the personal details and medical records of the patient on the graphical user interface of the e-PHRS, and preventing a medical entity to modify the personal and medical records of the patient in the e-PHRS.

No. of Pages : 27 No. of Claims : 10

(12) PATENT APPLICATION PUBLICATION
(21) Application No.1855/MUM/2013 A
(19) INDIA
(22) Date of filing of Application :27/05/2013
(43) Publication Date : 08/05/2015

(54) Title of the invention : THE UNIQUE TAPERED HORIZONTAL LEATHER BELT ROLLER FOR CLEANING OF DIFFERENT GRAINS USING DAL MILLING DEVICES

(51) International classification :A01F12/44
(31) Priority Document No :NA
(32) Priority Date :NA
(33) Name of priority country :NA
(86) International Application No :NA
Filing Date :NA
(87) International Publication No : NA
(61) Patent of Addition to Application Number :NA
Filing Date :NA
(62) Divisional to Application Number :NA
Filing Date :NA

(71)**Name of Applicant :**
1)DR. PUNJABRAO DESHMUKH KRISHI VIDYAPEETH
Address of Applicant :KRISHI NAGAR, AKOLA - 444 104, MAHARASHTRA, INDIA
2)ICAR-ALL INDIA COORDINATED RESEARCH PROJECT ON POST HARVEST TECHNOLOGY, CIPHET, LUDHIANA
(72)**Name of Inventor :**
1)PRADEEP ATMARAM BORKAR
2)DNYANESHWAR BALAJI GHAGHAWE

(57) Abstract :
The present invention is related to fabrication of unique tapered horizontal leather belt roller for dal milling devices. The invention discloses the different units of the unique roller fabricated and the process for its fabrication including spacing and tapered placement of rasp bars and fastening of leather belt pieces on rasp bars in zigzag manner besides the horizontal orientation of roller. The leather belt pieces fastened on rasp bars exerts the rubbing action against the perforated screen so as to reduce down the impurities into smaller particles and rain affected grains into splits and separation thereof from good grain mass.

No. of Pages : 14 No. of Claims : 2

(12) PATENT APPLICATION PUBLICATION
(19) INDIA
(22) Date of filing of Application :26/03/2013
(21) Application No.1129/MUM/2013 A
(43) Publication Date : 08/05/2015

(54) Title of the invention : A NOVEL PROCESS FOR PREPARATION OF ERYTHROMYCIN STEARATE.

(51) International classification	:A61K31/7048, A61K9/20, A61P31/04
(31) Priority Document No	:NA
(32) Priority Date	:NA
(33) Name of priority country	:NA
(86) International Application No	:NA
Filing Date	:NA
(87) International Publication No	: NA
(61) Patent of Addition to Application Number	:NA
Filing Date	:NA
(62) Divisional to Application Number	:NA
Filing Date	:NA

(71)**Name of Applicant :**
1)CALYX CHEMICALS AND PHARMACEUTICALS LTD.
Address of Applicant :2, MARWAH'S COMPLEX, SAKIVIHAR ROAD, SAKINAKA, ANDHERI (E), MUMBAI-400 072, MAHARASHTRA, INDIA
(72)**Name of Inventor :**
1)LAL, BANSI
2)KULKARNI, DILIP GANESH
3)KULKARNI, RAHUL SURESH
4)PAWAR, SANJAY DATTATREYA
5)JADHAV, NARAYAN MURALIDHAR
6)SUDRIK, VILAS ABASO

(57) Abstract :
The present invention relates to a novel process for the preparation of Erythromycin Stearate by reacting Erythromycin or its salts with stearic acid in presence of water as a solvent.

No. of Pages : 16 No. of Claims : 6

(12) PATENT APPLICATION PUBLICATION
(19) INDIA
(22) Date of filing of Application :30/07/2014
(21) Application No.1538/MUMNP/2014 A
(43) Publication Date : 08/05/2015

(54) Title of the invention : METHOD FOR PRODUCING ELECTRICAL STEEL SHEET

(51) International classification :C21D8/12,C22C38/00,C22C38/60
(31) Priority Document No :2012-037682
(32) Priority Date :23/02/2012
(33) Name of priority country :Japan
(86) International Application No :PCT/JP2013/000967
Filing Date :21/02/2013
(87) International Publication No :WO 2013/125223
(61) Patent of Addition to Application Number :NA
Filing Date :NA
(62) Divisional to Application Number :NA
Filing Date :NA

(71)**Name of Applicant :**
1)JFE STEEL CORPORATION
Address of Applicant :2 3 Uchisaiwai cho 2 chome Chiyoda ku Tokyo 1000011 Japan
(72)**Name of Inventor :**
1)NAKANISHI Tadashi
2)ZAIZEN Yoshiaki
3)ODA Yoshihiko
4)TODA Hiroaki

(57) Abstract :
A high strength electrical steel sheet is produced by a series of steps involving heating a slab which comprises a predetermined component composition subjecting the slab to hot rolling which comprises rough rolling and finish rolling then subjecting the slab to hot band annealing pickling the slab then cold rolling the slab once to the final sheet thickness thereof and final annealing the slab wherein: the cumulative rolling reduction ratio in said rough rolling is 73.0% or greater; in said hot band annealing step annealing conditions are selected such that under conditions where the annealing temperature is between 850°C and 1000°C inclusive and the annealing time is between 10 seconds and 10 minutes inclusive the area percentage of recrystallized grains in a cross section along the steel sheet rolling direction after said hot band annealing becomes 100% and the recrystallized grain size falls between 80 µm and 300 µm inclusive; and in said final annealing step annealing conditions are selected such that under conditions where the annealing temperature is between 670°C and 800°C inclusive and the annealing time is between 2 seconds and 1 minute inclusive the area percentage of recrystallized grains in a cross section along the steel sheet rolling direction after said final annealing falls between 30% and 95% inclusive and the length in the rolling direction of a group of connected non recrystallized grains becomes 2.5 mm or shorter.

No. of Pages : 35 No. of Claims : 4

(12) PATENT APPLICATION PUBLICATION
(19) INDIA
(22) Date of filing of Application :30/07/2014
(21) Application No.1539/MUMNP/2014 A
(43) Publication Date : 08/05/2015

(54) Title of the invention : BONE SCREW AND METHOD FOR MANUFACTURING THE SAME

(51) International classification :A61B17/58
(31) Priority Document No :13/369760
(32) Priority Date :09/02/2012
(33) Name of priority country :U.S.A.
(86) International Application No :PCT/US2013/025059
Filing Date :07/02/2013
(87) International Publication No :WO 2013/119754
(61) Patent of Addition to Application Number :NA
Filing Date :NA
(62) Divisional to Application Number :NA
Filing Date :NA

(71)**Name of Applicant :**
1)ORTHOPEDIC MEDICAL CHANNELS LLC
Address of Applicant :22 Second Avenue Port Washington NY 11050 U.S.A.
(72)**Name of Inventor :**
1)WILLERT Wayne A.
2)WILLERT Andrea

(57) Abstract :
A bone screw and a method for manufacturing the same includes a screw thread configuration having one or more grooves cut into a leading face of the thread a trailing face of the thread and/or the shaft between the threads. Other implementations include the incorporation of facets into the one or more grooves. The implementation of the one or more grooves increases the surface are of the orthopedic screw and functions to increase in anchoring the bone screw within the bone once inserted therein and thereby reduce the possibility for the screw backing out after insertion.

No. of Pages : 41 No. of Claims : 12

(12) PATENT APPLICATION PUBLICATION
(19) INDIA
(22) Date of filing of Application :16/08/2010
(21) Application No.2292/MUM/2010 A
(43) Publication Date : 08/05/2015

(54) Title of the invention : CRUISE CONTROL DEVICE

(51) International classification	:B60W 30/14
(31) Priority Document No	:NA
(32) Priority Date	:NA
(33) Name of priority country	:NA
(86) International Application No	:NA
Filing Date	:NA
(87) International Publication No	: NA
(61) Patent of Addition to Application Number	:NA
Filing Date	:NA
(62) Divisional to Application Number	:NA
Filing Date	:NA

(71)**Name of Applicant :**
1)TATA MOTORS LIMITED
Address of Applicant :Bombay House 24 Homi Mody Street Hutatma Chowk Mumbai 400 001 Maharashtra India
(72)**Name of Inventor :**
1)Praveen Babu Kommareddy
2)Nadeem Shaikh
3)Prabhakar Swamy

(57) Abstract :
The invention includes a rack having locking serrations for locking a fuel control lever. The rack is passed through a sleeve provided on a holding bracket which has provision at its top surface for fixing an actuator. The actuator acts as a locking device. On actuation of the actuator, a pin locks the fuel control lever. The actuation switch is fitted on the dash board in close proximity of the driver and is an automatic reset switch. It resets itself once the circuit is broken due to activation of brake or the clutch pedal. There is an electrical circuit which runs through the cruise activation switch, Brake pedal switch & the clutch switch to the actuator.

No. of Pages : 23 No. of Claims : 14

(12) PATENT APPLICATION PUBLICATION
(19) INDIA
(22) Date of filing of Application :28/05/2014
(21) Application No.1040/MUMNP/2014 A
(43) Publication Date : 08/05/2015

(54) Title of the invention : ANTIMICROBIAL COMPOSITION

(51) International classification	:A01P1/00,A01N31/08,A01N31/04
(31) Priority Document No	:61/567356
(32) Priority Date	:06/12/2011
(33) Name of priority country	:U.S.A.
(86) International Application No	:PCT/EP2012/074421
Filing Date	:05/12/2012
(87) International Publication No	:WO 2013/083593
(61) Patent of Addition to Application Number	:NA
Filing Date	:NA
(62) Divisional to Application Number	:NA
Filing Date	:NA

(71)**Name of Applicant :**
1)UNILEVER PLC
Address of Applicant :a company registered in England and Wales under company no. 41424 of Unilever House 100 Victoria Embankment London Greater London EC4Y 0DY U.K.
(72)**Name of Inventor :**
1)CORNMELL Robert Joseph
2)DIEHL Megan Anne
3)GOLDING Stephen
4)HARP John Robert
5)STOTT Ian Peter
6)THOMPSON Katherine Mary
7)TRUSLOW Carol Lynn

(57) Abstract :
The present invention relates to an antimicrobial composition and a method for disinfection involving the antimicrobial composition. It particularly relates to an antimicrobial composition for personal cleaning oral care or hard surface cleaning applications. It was found that compositions comprising thymol selected antimicrobial alcohols and a carrier provide synergistic antimicrobial action. In a preferred aspect the composition also comprises 1 to 80 % wt of one or more surfactants.

No. of Pages : 49 No. of Claims : 14

(12) PATENT APPLICATION PUBLICATION
(19) INDIA
(22) Date of filing of Application :28/05/2014
(21) Application No.1041/MUMNP/2014 A
(43) Publication Date : 08/05/2015

(54) Title of the invention : BALLAST WATER TREATMENT DEVICE USING TRANSPORTATION CONTAINER

(51) International classification :C02F1/00,B63B13/00,B65D88/12
(31) Priority Document No :2012-079921
(32) Priority Date :30/03/2012
(33) Name of priority country :Japan
(86) International Application No :PCT/JP2013/056022
Filing Date :05/03/2013
(87) International Publication No :WO 2013/146125
(61) Patent of Addition to Application Number :NA
Filing Date :NA
(62) Divisional to Application Number :NA
Filing Date :NA

(71)**Name of Applicant :**
1)MITSUBISHI HEAVY INDUSTRIES LTD.
Address of Applicant :16 5 Konan 2 chome Minato ku Tokyo 1088215 Japan
2)Hitachi Ltd.
(72)**Name of Inventor :**
1)OKUDA Koichi
2)MORIMOTO Shinsuke
3)TAKEMURA Kiyokazu
4)YUMOTO Satoshi

(57) Abstract :
Provided is a ballast water treatment device using a transportation container capable of housing various kinds of equipment for treating ballast water and capable of being fixed to the body of a ship using a container fixing metal fitting provided in the ship. A ballast water treatment device (11) is provided with various kinds of equipment (13 14) for treating ballast water and a transportation container (12) for housing all of the equipment (13 14). The transportation container (12) is formed such that the length of the outer dimension thereof is the same as that of a standard size transportation container and the height (H) of the outer dimension thereof is higher than that of the standard size transportation container or the width (W) of the outer dimension thereof is wider than that of the standard size transportation container.

No. of Pages : 42 No. of Claims : 15

(12) PATENT APPLICATION PUBLICATION
(21) Application No.1099/MUM/2013 A
(19) INDIA
(22) Date of filing of Application :25/03/2013
(43) Publication Date : 08/05/2015

(54) Title of the invention : ENCLOSURE FOR CUT-OUT OPENING IN DOOR OF SWITCH-BOARD OF A SWITCHING DEVICE

(51) International classification	:E05B65/00, F25D
(31) Priority Document No	:NA
(32) Priority Date	:NA
(33) Name of priority country	:NA
(86) International Application No	:NA
Filing Date	:NA
(87) International Publication No	: NA
(61) Patent of Addition to Application Number	:NA
Filing Date	:NA
(62) Divisional to Application Number	:NA
Filing Date	:NA

(71)**Name of Applicant :**
1)LARSEN & TOUBRO LIMITED
Address of Applicant :LARSEN & TOUBRO LIMITED L&T HOUSE, BALLARD ESTATE, P. O. BOX: 278, MUMBAI 400 001, INDIA Maharashtra India
(72)**Name of Inventor :**
1)DHARM M PANCHAL
2)RAJENDER SINGH NIRANJAN
3)MAHENDRA C. DAVE

(57) Abstract :
Disclosed is an arrangement to create a safe working environment for humans and for protecting internal accessories housed in a panel. The arrangement uses a bezel assembly pre-mounted on a door cut-out of the panel. The bezel assembly includes a plurality of grooves configured thereon and shielding member having a plurality of ridges configured across boundary thereof. Specifically, the plurality of ridges is capable of being accommodated in the plurality of grooves of the bezel assembly.

No. of Pages : 16 No. of Claims : 2

(12) PATENT APPLICATION PUBLICATION
(19) INDIA
(22) Date of filing of Application :28/07/2014
(21) Application No.1519/MUMNP/2014 A
(43) Publication Date : 08/05/2015

(54) Title of the invention : METHOD FOR THE AMPLIFICATION OF NUCLEIC ACIDS

(51) International classification :C12Q1/68
(31) Priority Document No :10 2012 201 475.6
(32) Priority Date :01/02/2012
(33) Name of priority country :Germany
(86) International Application No :PCT/EP2013/052100
Filing Date :01/02/2013
(87) International Publication No :WO 2013/113910
(61) Patent of Addition to Application Number :NA
Filing Date :NA
(62) Divisional to Application Number :NA
Filing Date :NA

(71)**Name of Applicant :**
1)GNA BIOSOLUTIONS GMBH
Address of Applicant :Am Klopferspitz 19 82152 Planegg Germany
(72)**Name of Inventor :**
1)STEHR Joachim
2)BUERSGENS Federico
3)ULLERICH Lars

(57) Abstract :
A method for the amplification of nucleic acids (1) in which nanoparticles (8) in a reaction volume (2) transfer heat to their environment through excitation.

No. of Pages : 64 No. of Claims : 15

(12) PATENT APPLICATION PUBLICATION
(19) INDIA
(22) Date of filing of Application :20/03/2013
(21) Application No.928/MUM/2013 A
(43) Publication Date : 08/05/2015

(54) Title of the invention : AC AND DC DIGITAL WATT METER WITH COMPUTER INTERFACE

(51) International classification :H02J3/00
(31) Priority Document No :NA
(32) Priority Date :NA
(33) Name of priority country :NA
(86) International Application No :NA
Filing Date :NA
(87) International Publication No : NA
(61) Patent of Addition to Application Number :NA
Filing Date :NA
(62) Divisional to Application Number :NA
Filing Date :NA

(71)**Name of Applicant :**
1)Dr. Vasani Rupesh Parmanand
Address of Applicant :07, Aditraj Bunglows, Near Nandanvan-5, B/h Kalatirth Apartment, Prernatirth Derasar Road, Jodhpur, Ahmedabad-380015. Gujarat, India.
2)Shah Parin Kamalkumar
3)Jain Anjil Anvin
4)Bhavsar Swapnil Chandrakant
(72)**Name of Inventor :**
1)Dr. Vasani Rupesh Parmanand
2)Shah Parin Kamalkumar
3)Jain Anjil Anvin
4)Bhavsar Swapnil Chandrakant
5)Patel Bhupendra Laljibhai

(57) Abstract :
The present invention a specially design AC & DC digital watt meter having the input and output point, the AC & DC meter will calculate the different power quantity and require power to run and the digital values are accurate in compare to the analog AC & DC watt meter. The AC & DC watt meter is the special meter which is also having the computer interface and the measure quantity will be logged in the computer. There is a special switch to convert the meter into AC or DC.

No. of Pages : 10 No. of Claims : 3

(12) PATENT APPLICATION PUBLICATION
(21) Application No.1065/MUM/2013 A
(19) INDIA
(22) Date of filing of Application :25/03/2013
(43) Publication Date : 08/05/2015

(54) Title of the invention : WATER SAVING FLUSH SYSTEM

(51) International classification	:E03C1/12, E03C1/14, E03C1/182, E03D1/00	(71)**Name of Applicant :** **1)Dr. Vasani Rupesh Parmanand** Address of Applicant :07, Aditraj Bunglows, Near Nandanvan-5, B/h Kalatirth Apartment, Prernatirth Derasar Road, Jodhpur, Ahmedabad-380015. Gujarat, India.
(31) Priority Document No	:NA	**2)Shah Parin Kamalkumar**
(32) Priority Date	:NA	**3)Jain Anjil Anvin**
(33) Name of priority country	:NA	**4)Bhavsar Swapnil Chandrakant**
(86) International Application No	:NA	(72)**Name of Inventor :**
Filing Date	:NA	**1)Dr. Vasani Rupesh Parmanand**
(87) International Publication No	: NA	**2)Shah Parin Kamalkumar**
(61) Patent of Addition to Application Number	:NA	**3)Jain Anjil Anvin**
Filing Date	:NA	**4)Bhavsar Swapnil Chandrakant**
(62) Divisional to Application Number	:NA	
Filing Date	:NA	

(57) Abstract :
The present invention of ˜Water Saving Flush System™ uses a specially designed flush system. Here the flush system is divided into two halves, one tank is bigger flush and the other is smaller flush. These two flushes are operated by two separate flush valves on the flush tank. The smaller flush is situated at the right side and bigger flush is at left side, because the general conventional flushes have a single flush valve, that is generally at right side. Here putting smaller at right side is intentional to save water as people are used to push the flush valve at right side.

No. of Pages : 10 No. of Claims : 3

(12) PATENT APPLICATION PUBLICATION
(19) INDIA
(22) Date of filing of Application :25/03/2013

(21) Application No.1066/MUM/2013 A
(43) Publication Date : 08/05/2015

(54) Title of the invention : SAVONIUS TURBINE BLADE

(51) International classification	:F03D3/04, F03D3/06	(71)**Name of Applicant :**
(31) Priority Document No	:NA	**1)Bhavsar Swapnil Chandrakant**
(32) Priority Date	:NA	Address of Applicant :M-64/768, Chitrakut Apartment Sola Road, Naranpura Ahmedabad-380063 Gujarat, India.
(33) Name of priority country	:NA	**2)Jain Anjil Anvin**
(86) International Application No	:NA	**3)Shah Parin Kamalkumar**
Filing Date	:NA	**4)Dr. Vasani Rupesh Parmanand**
(87) International Publication No	: NA	(72)**Name of Inventor :**
(61) Patent of Addition to Application Number	:NA	**1)Dr. Vasani Rupesh Parmanand**
Filing Date	:NA	**2)Shah Parin Kamalkumar**
(62) Divisional to Application Number	:NA	**3)Jain Anjil Anvin**
Filing Date	:NA	**4)Bhavsar Swapnil Chandrakant**

(57) Abstract :
The present invention of ˜Savonius Turbine Blade™ is a specially designed turbine blades used for wind mills to extract energy from the wind. The ˜Savonius Turbine Blade™ consists of two or three scoops. Looking from the top, a two-scoop machine looks like an S shape in cross section. Because of the curvature, the scoops experience less drag when moving against the wind than when moving with the wind. The differential drag causes the Savonius turbine to spin and the wind is trapped in the Savonius Blade and the energy of the wind is totally utilized to rotate the turbine blade. Because they are drag-type devices, Savonius turbines extract much less of the winds power than other similarly-sized lift-type turbines.

No. of Pages : 10 No. of Claims : 3

(12) PATENT APPLICATION PUBLICATION
(21) Application No.1550/MUMNP/2014 A
(19) INDIA
(22) Date of filing of Application :31/07/2014
(43) Publication Date : 08/05/2015

(54) Title of the invention : SAMPLING PIPETTE WHICH DETECTS THE PASSAGE OF THE PISTON THROUGH A PREDETERMINED POSITION

(51) International classification :B01L3/02
(31) Priority Document No :12 51329
(32) Priority Date :13/02/2012
(33) Name of priority country :France
(86) International Application No :PCT/EP2013/052807
Filing Date :13/02/2013
(87) International Publication No :WO 2013/120862
(61) Patent of Addition to Application Number :NA
Filing Date :NA
(62) Divisional to Application Number :NA
Filing Date :NA

(71)**Name of Applicant :**
1)GILSON SAS
Address of Applicant :19 Avenue des Entrepreneurs ZI Tissonvilliers BP145 F 95400 Villiers Le Bel France
(72)**Name of Inventor :**
1)BARON Stfen

(57) Abstract :
The invention concerns a manually actuated pipette comprising a piston intended to perform a dispensing stroke loading first elastic return means followed by a purge stroke loading second elastic return means and comprising an electronic device (40) intended to receive a switching signal which translates the passage of the piston through a predetermined position along the dispensing or purge stroke thereof position wherein the elastic means have a predetermined level of deformation. The pipette also comprises a switch (32) capable of delivering the signal to the electronic device. Moreover an elastic support (30) is capable of deforming under the effect of the axial pressure of the operator and the pipette is designed such that the deformation of the support which results in switching is caused when the force of the axial pressure is greater than that which places the elastic means at their predetermined level of deformation.

No. of Pages : 24 No. of Claims : 12

(12) PATENT APPLICATION PUBLICATION
(21) Application No.927/MUM/2013 A
(19) INDIA
(22) Date of filing of Application :20/03/2013
(43) Publication Date : 08/05/2015

(54) Title of the invention : SYSTEM, METHOD, ARTICLE OF MANUFACTURE OF MIXED REALITY BASED, BIOMETRICALLY SIGNED REUSABLE PHYSICAL FINANCIAL INSTRUMENT

(51) International classification	:G06Q40/00	(71)**Name of Applicant :**
(31) Priority Document No	:NA	**1)Tata Consultancy Services Limited**
(32) Priority Date	:NA	Address of Applicant :Nirmal Building, 9th Floor, Nariman Point, Mumbai 400021, Maharashtra, India
(33) Name of priority country	:NA	(72)**Name of Inventor :**
(86) International Application No	:NA	**1)THOMAS, Annie**
Filing Date	:NA	**2)GARG, Shalin**
(87) International Publication No	: NA	**3)VALLAT, Sathish**
(61) Patent of Addition to Application Number	:NA	
Filing Date	:NA	
(62) Divisional to Application Number	:NA	
Filing Date	:NA	

(57) Abstract :
The present invention relates to a reusable physical financial instrument and a system and a method for enabling the financial instrument to perform multiple financial transactions. The financial instrument is capable of creating mixed reality experience when it comes in vicinity of the payor or payee device or ATM. Through the created mixed reality experience, the payor and the payee inputs payor-side and payee-side transaction and biometric data which are stored onto smart chip of the instrument and/or on Cloud Storage using cloud computing interface. The stored payor-side and payee-side transaction data are cross-validated and their biometric data is further verified against golden copy at the respective financial institutions or at the Central Authority™s repositories for performing the financial transaction. Upon completing the transaction, the payor-side and the payee-side data is erased, deleted or invalidated from the smart chip, thus making the financial instrument reusable for performing another transaction.

No. of Pages : 47 No. of Claims : 31

(12) PATENT APPLICATION PUBLICATION
(19) INDIA
(22) Date of filing of Application :29/05/2014
(21) Application No.1047/MUMNP/2014 A
(43) Publication Date : 08/05/2015

(54) Title of the invention : RESIN COMPOSITION FOR SEALANTS LAMINATED FILM AND PACKAGING BAG

(51) International classification :C09K3/10,B32B27/00,B65D65/40
(31) Priority Document No :2012-003221
(32) Priority Date :11/01/2012
(33) Name of priority country :Japan
(86) International Application No :PCT/JP2013/050019
Filing Date :07/01/2013
(87) International Publication No :WO 2013/105524
(61) Patent of Addition to Application Number :NA
Filing Date :NA
(62) Divisional to Application Number :NA
Filing Date :NA

(71)**Name of Applicant :**
1)FUJIMORI KOGYO CO. LTD.
Address of Applicant :1 23 7 Nishi Shinjuku Shinjuku ku Tokyo 1600023 Japan
(72)**Name of Inventor :**
1)OKAMOTO Hajime
2)KASHIMA Kousuke
3)INADA Masakazu
4)YOSHIDA Mihoko

(57) Abstract :
The purpose of the present invention is to provide a resin composition for sealants a laminated film and a packaging bag whereby it becomes possible to improve non adsorbability to organic components contained in contents and heat sealing properties. Provided is a resin composition for sealants comprising a cycloolefin polymer (COP) and a cycloolefin copolymer (COC) wherein the compounding ratio of the cycloolefin polymer (COP) is 10 to 95 wt% and the compounding ratio of the cycloolefin copolymer (COC) is 5 to 90 wt%.

No. of Pages : 21 No. of Claims : 4

(12) PATENT APPLICATION PUBLICATION
(21) Application No.1526/MUMNP/2014 A
(19) INDIA
(22) Date of filing of Application :30/07/2014
(43) Publication Date : 08/05/2015

(54) Title of the invention : MULTI FUNCTIONAL VALVE DEVICE FOR EXPELLING HUMIDITY AND SATURATED STEAM FOR BUILDING STRUCTURES

(51) International classification	:F24F13/22,F16K15/02,F16K15/04
(31) Priority Document No	:TO2011A001251
(32) Priority Date	:31/12/2011
(33) Name of priority country	:Italy
(86) International Application No	:PCT/IT2012/000408
Filing Date	:31/12/2012
(87) International Publication No	:WO 2013/098868
(61) Patent of Addition to Application Number	:NA
Filing Date	:NA
(62) Divisional to Application Number	:NA
Filing Date	:NA

(71)**Name of Applicant :**
1)CABONI Michele
Address of Applicant :Via Adua 55 09170 Oristano Italy
(72)**Name of Inventor :**
1)CABONI Michele

(57) Abstract :
A multi functional valve device (1) is described for expelling humidity and saturated steam adapted to operate through the pressure difference existing inside building structures and adapted to be placed in recesses of building envelopes; the device (1) comprises: a first holding element (3) equipped with a first hollow duct (5) for communicating with outside the device (1); a second holding element (7) operatively coupled with the first holding element (3) and equipped with a containing seat (9) the second holding element (7) being further equipped with a second hollow duct (13) for communicating with outside the device (1); and an opening/closing element (11 11 15) of the device (1) the opening/closing element (11 11 15) being adapted to assume a closing position of the device (1) in which it is in contact with the first holding element (3) closing. the first hollow duct (5) the opening/closing element (11 11 15) being adapted to also assume an opening position of the device (1) in which it is not in contact with the first holding element (3) and communicates the first hollow duct (5) and the second hollow duct (13).

No. of Pages : 29 No. of Claims : 13

(12) PATENT APPLICATION PUBLICATION
(21) Application No.1527/MUMNP/2014 A
(19) INDIA
(22) Date of filing of Application :30/07/2014
(43) Publication Date : 08/05/2015

(54) Title of the invention : AUTOLOGOUS CANCER CELL VACCINE

(51) International classification :A61K39/00
(31) Priority Document No :61/589123
(32) Priority Date :20/01/2012
(33) Name of priority country :U.S.A.
(86) International Application No :PCT/BR2013/000047
Filing Date :18/01/2013
(87) International Publication No :WO 2013/106895
(61) Patent of Addition to Application Number :NA
Filing Date :NA
(62) Divisional to Application Number :NA
Filing Date :NA

(71)**Name of Applicant :**
1)KREUTZ Fernando Thome
Address of Applicant :Rua Da Varzea 22 Bairro Jardiim Sao Pedro 91.040 600 Porto Alegre RS Brazil
(72)**Name of Inventor :**
1)KREUTZ Fernando Thome

(57) Abstract :
An autologous cancer cell vaccine comprises cancer cells that express both MHCI and MHCII on their cell surface. The MHCI presents a cancer antigen and the MHCII presents a non self antigen. In accordance with an aspect there is provided a method for making isolated immunogenic cancer cells the method comprising: inducing expression of MHCII on cancer cells isolated from a subject; incubating the cancer cells with a non self antigen so that the non self antigen will be bound to expressed MHCII; and killing the cancer cells.

No. of Pages : 61 No. of Claims : 159

(12) PATENT APPLICATION PUBLICATION
(21) Application No.934/MUM/2013 A
(19) INDIA
(22) Date of filing of Application :20/03/2013
(43) Publication Date : 08/05/2015

(54) Title of the invention : SYSTEM TO MEASURE STRENGTH OF TEXT BASED CAPTCHA

(51) International classification	:G10L15/00	(71)**Name of Applicant :**
(31) Priority Document No	:NA	**1)Mrs. Anjali Avinash Chandavale**
(32) Priority Date	:NA	Address of Applicant :B1/10,Shivtara Garden, Near Gananjay
(33) Name of priority country	:NA	Society, New D.P. Road, Kothrud,Pune-411038 Maharashtra India
(86) International Application No	:NA	(72)**Name of Inventor :**
Filing Date	:NA	**1)Mrs. Anjali Avinash Chandavale**
(87) International Publication No	: NA	**2)Dr. Ashok M Sapkal**
(61) Patent of Addition to Application Number	:NA	
Filing Date	:NA	
(62) Divisional to Application Number	:NA	
Filing Date	:NA	

(57) Abstract :
The upcoming Text based CAPTCHA is provided security at preprocessing layer, segmentation layer and character recognition layer. Present invention aims to develop a system to measure strength of Text based CAPTCHA that are augmented with anti-preprocessing, anti-segmentation and anti- character recognition techniques. The strength defines the robustness of system which in turn depends on number of attempts the malicious program who does not have direct access will need to defend it. The strength of TBC is inversely proportional to character recognition rate. The character recognition rate is defined as the number of characters correctly recognized by system or software program in a desired order. The proposed system will determine strength of TBC with the help of character recognition rate which is found by comparing the characters recognized by proposed system with characters entered by human in a desired order for the given TBC image. The proposed system will indicate the strength of Text based CAPTCHA in terms of type of TBC, Length, Character recognition rate and its response time hence will break security at 3 layers namely preprocessing, segmentation and character recognition. The system will also report the weakness of text based CAPTCHA which in turn will be helpful to CAPTCHA providers to generate more robust CAPTCHA. The developed system will have human intervention for adjustment of strength in case of weak Text Based CAPTCHA. The invention is described by way of example with reference to the following drawings where Figure 1 of sheet 1 showing TBC representation, Figure 2 of Sheet 1showing proposed system, Figure 3 of sheet 2 showing feature extraction of Input TBC image, Figure 4 of sheet 2 showing CAPTCHA Segmenter for Connected RECAPTCHA.

No. of Pages : 19 No. of Claims : 11

(12) PATENT APPLICATION PUBLICATION
(19) INDIA
(22) Date of filing of Application :31/07/2014
(21) Application No.1546/MUMNP/2014 A
(43) Publication Date : 08/05/2015

(54) Title of the invention : PYRROLIDINE SUBSTITUTED FLAVONE DERIVATIVES FOR PREVENTION OR TREATMENT OF ORAL MUCOSITIS

(51) International classification :A61K31/4025,A61P17/16
(31) Priority Document No :61/586428
(32) Priority Date :13/01/2012
(33) Name of priority country :U.S.A.
(86) International Application No :PCT/IB2013/050263
Filing Date :11/01/2013
(87) International Publication No :WO 2013/105056
(61) Patent of Addition to Application Number :NA
Filing Date :NA
(62) Divisional to Application Number :NA
Filing Date :NA

(71)**Name of Applicant :**
1)PIRAMAL ENTERPRISES LIMITED
Address of Applicant :Piramal Tower Ganpatrao Kadam Marg Lower Parel Mumbai 400013 India Maharashtra India
(72)**Name of Inventor :**
1)SHARMA Somesh
2)HATFIELD Alan
3)ACHARYA Shivani

(57) Abstract :
The present invention relates to the pyrrolidine substituted with flavone derivatives represented by the compounds of Formula (I) (as described herein) or pharmaceutically acceptable salts solvates stereoisomers or diastereoisomers thereof or pharmaceutical compositions containing the compounds of Formula (I) for use in the prevention and/or treatment of oral mucositis caused by cancer therapy such as radiation therapy.

No. of Pages : 43 No. of Claims : 19

(12) PATENT APPLICATION PUBLICATION
(19) INDIA
(22) Date of filing of Application :31/07/2014
(21) Application No.1547/MUMNP/2014 A
(43) Publication Date : 08/05/2015

(54) Title of the invention : ANTIVIRAL COMPOUNDS WITH A DIBENZOOXAHETEROCYCLE MOIETY

(51) International classification	:C07D405/14,A61K31/4178,A61P31/12
(31) Priority Document No	:147/KOL/2012
(32) Priority Date	:10/02/2012
(33) Name of priority country	:India
(86) International Application No	:PCT/IB2013/051062
Filing Date	:08/02/2013
(87) International Publication No	:WO 2013/118097
(61) Patent of Addition to Application Number	:NA
Filing Date	:NA
(62) Divisional to Application Number	:NA
Filing Date	:NA

(71)**Name of Applicant :**
1)LUPIN LIMITED
Address of Applicant :159 CST Road Kalina Santacruz (East) State of Maharashtra India. Mumbai 400 098 Maharashtra India
(72)**Name of Inventor :**
1)RAMDAS Vidya
2)JOSHI Advait Arun
3)BANERJEE Moloy Manoj
4)DAS Amit Kumar
5)WALKE Deepak Sahebrao
6)PALLE Venkata P.
7)KAMBOJ Rajender Kumar

(57) Abstract :
Disclosed are compounds of formula (I) for use as antiviral agents particularly as anti hepatitis virus C agents wherein R R 6 and q are as described herein. Also disclosed are pharmaceutical compositions and methods of treating or preventing viral infection in a host by the use of these compounds either alone or in combination with other pharmaceutically active agents. Further disclosed are methods of preparing such compounds.(I).

No. of Pages : 75 No. of Claims : 23

(12) PATENT APPLICATION PUBLICATION
(19) INDIA
(22) Date of filing of Application :31/07/2014
(21) Application No.1548/MUMNP/2014 A
(43) Publication Date : 08/05/2015

(54) Title of the invention : ANTIVIRAL COMPOUNDS WITH A HETEROTRICYCLE MOIETY

(51) International classification :C07D409/14,C07D417/14,C07D495/04
(31) Priority Document No :147/KOL/2012
(32) Priority Date :10/02/2012
(33) Name of priority country :India
(86) International Application No :PCT/IB2013/051077
Filing Date :09/02/2013
(87) International Publication No :WO 2013/118102
(61) Patent of Addition to Application Number :NA
Filing Date :NA
(62) Divisional to Application Number :NA
Filing Date :NA

(71)**Name of Applicant :**
1)LUPIN LIMITED
Address of Applicant :159 CST Road Kalina Santacruz (East) State of Maharashtra Mumbai 400 098 India Maharashtra India
(72)**Name of Inventor :**
1)RAMDAS Vidya
2)JOSHI Advait Arun
3)BANERJEE Moloy Manoj
4)DAS Amit Kumar
5)WALKE Deepak Sahebrao
6)PALLE Venkata P.
7)KAMBOJ Rajender Kumar

(57) Abstract :
Disclosed are compounds of formula (I) for use as antiviral agents particularly as anti hepatitis virus C agents wherein A B U R R m n and q are as described herein. Also disclosed are pharmaceutical compositions and methods of treating or preventing viral infection in a host by the use of these compounds either alone or in combination with other pharmaceutically active agents. Further disclosed are methods of preparing such compounds.

No. of Pages : 79 No. of Claims : 24

(12) PATENT APPLICATION PUBLICATION
(19) INDIA
(22) Date of filing of Application :07/08/2014
(21) Application No.1609/MUMNP/2014 A
(43) Publication Date : 08/05/2015

(54) Title of the invention : APPARATUS AND METHOD OF INTER RADIO ACCESS TECHNOLOGY MEASUREMENT SCHEDULING BASED ON AN UNDETECTED FREQUENCY

(51) International classification :H04W48/18,H04W36/00,H04W36/14
(31) Priority Document No :61/611356
(32) Priority Date :15/03/2012
(33) Name of priority country :U.S.A.
(86) International Application No :PCT/US2013/031270
Filing Date :14/03/2013
(87) International Publication No :WO 2013/138576
(61) Patent of Addition to Application Number :NA
Filing Date :NA
(62) Divisional to Application Number :NA
Filing Date :NA

(71)**Name of Applicant :**
1)QUALCOMM INCORPORATED
Address of Applicant :Attn: International IP Administration 5775 Morehouse Drive San Diego CA 92121 U.S.A U.S.A.
(72)**Name of Inventor :**
1)WANG Fan
2)KHAN Uzma
3)TAMBARAM KAILASAM Sundaresan
4)MANDADAPU Krishna Rao
5)HU An Swol Clement

(57) Abstract :
Apparatus and method for wireless communication in a wireless communication network include operating a wireless device on a first wireless communication technology and detecting a first cell in first frequency of a second wireless communication technology. The aspects also include determining the detected cell of the second wireless communication technology satisfies a first reselection criterion based on a first measurement and identifying a second frequency of the second wireless communication technology as an undetected frequency based on monitoring the second frequency without detecting a second cell. Aspects also include expediting a determination of whether to perform cell reselection to the second wireless communication technology based on the undetected frequency and the detected cell of the second wireless communication technology satisfying the first reselection criterion and determining to reselect to the detected cell of the second wireless communication technology.

No. of Pages : 67 No. of Claims : 34

(12) PATENT APPLICATION PUBLICATION
(21) Application No.942/MUM/2013 A
(19) INDIA
(22) Date of filing of Application :21/03/2013
(43) Publication Date : 08/05/2015

(54) Title of the invention : HEALING BODY PADS

(51) International classification	:A61F 7/08, A61F 13/15	(71)**Name of Applicant :** **1)DAGA ABHAY** Address of Applicant :PLOT NO. 81, SHITOLE NAGAR, OLD SANGVI, PUNE, MAHARASHTRA, INDIA
(31) Priority Document No	:NA	(72)**Name of Inventor :** **1)DAGA ABHAY**
(32) Priority Date	:NA	
(33) Name of priority country	:NA	
(86) International Application No	:NA	
Filing Date	:NA	
(87) International Publication No	: NA	
(61) Patent of Addition to Application Number	:NA	
Filing Date	:NA	
(62) Divisional to Application Number	:NA	
Filing Date	:NA	

(57) Abstract :
A healing body pad comprises: a fabric adapted to be a biomagnetism functional fabric, characterised, in that, magnets placed in said fabric in a manner such that they touch a body part on which said pad is worn; and negative ions charged powder adapted to be incorporated in the layer of said magnets.

No. of Pages : 13 No. of Claims : 8

(12) PATENT APPLICATION PUBLICATION
(19) INDIA
(22) Date of filing of Application :04/08/2014
(21) Application No.1569/MUMNP/2014 A
(43) Publication Date : 08/05/2015

(54) Title of the invention : IMPROVING DROUGHT RESISTANCE IN PLANTS: PECTINESTERASE

(51) International classification :C12N15/82,A01H5/00
(31) Priority Document No :61/599959
(32) Priority Date :17/02/2012
(33) Name of priority country :U.S.A.
(86) International Application No :PCT/NL2013/050102
Filing Date :18/02/2013
(87) International Publication No :WO 2013/122473
(61) Patent of Addition to Application Number :NA
Filing Date :NA
(62) Divisional to Application Number :NA
Filing Date :NA

(71)**Name of Applicant :**
1)KEYGENE N.V.
Address of Applicant :P.O. Box 216 NL 6700 AE Wageningen Netherlands
(72)**Name of Inventor :**
1)DESLATTES MAYS Anne
2)VAN HULTEN Marieke Helena Adriana
3)DIXIT Shital Anilkumar
4)DE VOS Martin
5)MUNKVOLD Jesse David
6)DILEO Matthew Vitabile

(57) Abstract :
The present invention relates to a new method for increasing drought resistance of a plant. The method encompasses the impairment of the expression of a gene or genes in said plant. In comparison to a plant not manipulated to impair the expression of said gene(s) the plants display improved drought resistance. Also provided are plants and plant products that can be obtained by the method according to the invention.

No. of Pages : 44 No. of Claims : 16

(12) PATENT APPLICATION PUBLICATION
(19) INDIA
(22) Date of filing of Application :04/08/2014
(21) Application No.1570/MUMNP/2014 A
(43) Publication Date : 08/05/2015

(54) Title of the invention : IMPROVING DROUGHT RESISTANCE IN PLANTS: UPL4

(51) International classification :C12N15/82,A01H5/00
(31) Priority Document No :61/599963
(32) Priority Date :17/02/2012
(33) Name of priority country :U.S.A.
(86) International Application No :PCT/NL2013/050100
Filing Date :18/02/2013
(87) International Publication No :WO 2013/122471
(61) Patent of Addition to Application Number :NA
Filing Date :NA
(62) Divisional to Application Number :NA
Filing Date :NA

(71)**Name of Applicant :**
1)KEYGENE N.V.
Address of Applicant :P.O. Box 216 NL 6700 AE Wageningen Netherlands
(72)**Name of Inventor :**
1)DESLATTES MAYS Anne
2)VAN HULTEN Marieke Helena Adriana
3)DIXIT Shital Anilkumar
4)DE VOS Martin
5)MUNKVOLD Jesse David
6)DILEO Matthew Vitabile

(57) Abstract :
The present invention relates to a new method for increasing drought resistance of a plant. The method encompasses the impairment of the expression of a gene or genes in said plant. In comparison to a plant not manipulated to impair the expression of said gene(s) the plants display improved drought resistance. Also provided are plants and plant product that can be obtained by the method according to the invention.

No. of Pages : 91 No. of Claims : 19

(12) PATENT APPLICATION PUBLICATION
(19) INDIA
(22) Date of filing of Application :13/08/2014
(21) Application No.1629/MUMNP/2014 A
(43) Publication Date : 08/05/2015

(54) Title of the invention : DISPLAY OF A SPATIALLY RELATED ANNOTATION FOR WRITTEN CONTENT

(51) International classification :G06F3/01,G06F3/14
(31) Priority Document No :NA
(32) Priority Date :NA
(33) Name of priority country :NA
(86) International Application No :PCT/US2012/027089
Filing Date :29/02/2012
(87) International Publication No :WO 2013/130060
(61) Patent of Addition to Application Number :NA
Filing Date :NA
(62) Divisional to Application Number :NA
Filing Date :NA

(71)**Name of Applicant :**
1)QUALCOMM INCORPORATED
Address of Applicant :5775 Morehouse Drive San Diego California 92121 U.S.A.
(72)**Name of Inventor :**
1)KIM Sueng Wook
2)MARTI Stefan J.
3)DI CENSO Davide

(57) Abstract :
Examples disclose a computing device comprising a processor to receive handwriting data from an electronic writing instrument describing written content provided on a surface off screen from a display. Further the examples provide the processor to analyze the handwriting data to determine an annotation corresponding to a portion of the written content. Additionally the examples also disclose a display on the computing device to render the annotation at a position spatially related to a position of the portion of written content on the writing surface.

No. of Pages : 25 No. of Claims : 15

(12) PATENT APPLICATION PUBLICATION
(21) Application No.1630/MUMNP/2014 A
(19) INDIA
(22) Date of filing of Application :13/08/2014
(43) Publication Date : 08/05/2015

(54) Title of the invention : METHOD AND APPARATUS TO SOLVE PHYSICAL LAYER ISSUES RELATED TO MULTIPLE TIMING ADVANCE GROUP SUPPORT

(51) International classification :H04L5/00,H04W56/00
(31) Priority Document No :61/591827
(32) Priority Date :27/01/2012
(33) Name of priority country :U.S.A.
(86) International Application No :PCT/US2013/021578
Filing Date :15/01/2013
(87) International Publication No :WO 2013/112320
(61) Patent of Addition to Application Number :NA
Filing Date :NA
(62) Divisional to Application Number :NA
Filing Date :NA

(71)**Name of Applicant :**
1)QUALCOMM INCORPORATED
Address of Applicant :ATTN: International IP Administration 5775 Morehouse Drive San Diego CA 92121 1714 U.S.A..
(72)**Name of Inventor :**
1)CHEN Wanshi
2)DAMNJANOVIC Jelena M.
3)GAAL Peter
4)XU Hao
5)LUO Tao

(57) Abstract :
A method an apparatus and a computer program product for wireless communication are provided. The apparatus may determine a number of uplink timing groups configured for a plurality of component carriers and determine whether to transmit at least one of data or control information on one or more first component carriers of the plurality of component carriers concurrently with sounding reference signals (SRS) on one or more second component carriers of the plurality of component carriers based at least in part on the number of uplink timing groups. When only one uplink timing group is determined the SRS is transmitted in a symbol on the one or more second component carriers if the data and control information is not transmitted in the symbol. When two uplink timing groups are determined SRS may be transmitted on the second component carriers concurrently with data or control information on the component carriers.

No. of Pages : 70 No. of Claims : 52

(12) PATENT APPLICATION PUBLICATION
(19) INDIA
(22) Date of filing of Application :21/03/2013
(21) Application No.950/MUM/2013 A
(43) Publication Date : 08/05/2015

(54) Title of the invention : A ROTARY STORED ENERGY OPERATING MECHANISM

(51) International classification :H01H3/60
(31) Priority Document No :NA
(32) Priority Date :NA
(33) Name of priority country :NA
(86) International Application No :NA
Filing Date :NA
(87) International Publication No : NA
(61) Patent of Addition to Application Number :NA
Filing Date :NA
(62) Divisional to Application Number :NA
Filing Date :NA

(71)**Name of Applicant :**
1)LARSEN & TOUBRO LTD.
Address of Applicant :L&T HOUSE, BALLARD ESTATE, MUMBAI-72, INDIA Maharashtra India
(72)**Name of Inventor :**
1)ANITYA VAIBHAV
2)PRAKEET I SINGH

(57) Abstract :
The stored energy rotary operating mechanism is a combination of mechanisms for accumulating and storing mechanical energy, wherein the energy is used to close the primary contacts of a circuit breaker. The energy can be input to the mechanism manually or by means of a motor. The mechanism includes a series of linkages which function to utilize the energy to close the primary contacts. These linkages also function to maintain the closing force upon the primary contacts, while also functioning to allow rapid contact opening when desired. A handle charging mechanism ensures the mechanism is operated manually. In the automatic mode a motor along with a gear train ensures the charging of the spring which gets compressed to store the energy and in doing so opens the contacts of the circuit breaker. A latching mechanism is used to hold the stored energy and release it as and when required. The driving shaft is linked to the spring charging mechanism and propels the circuit breaker through a knob accommodating setup to close the contacts when energy is released.

No. of Pages : 22 No. of Claims : 9

(12) PATENT APPLICATION PUBLICATION
(19) INDIA
(22) Date of filing of Application :11/08/2014
(21) Application No.1617/MUMNP/2014 A
(43) Publication Date : 08/05/2015

(54) Title of the invention : STERILIZATION METHOD

(51) International classification :A23L3/16,A23C3/037,A23L3/24
(31) Priority Document No :2012-046496
(32) Priority Date :02/03/2012
(33) Name of priority country :Japan
(86) International Application No :PCT/JP2013/055699
Filing Date :01/03/2013
(87) International Publication No :WO 2013/129654
(61) Patent of Addition to Application Number :NA
Filing Date :NA
(62) Divisional to Application Number :NA
Filing Date :NA

(71)**Name of Applicant :**
1)MEIJI CO. LTD.
Address of Applicant :2 10 Shinsuna 1 chome Koto ku Tokyo 1368908 Japan
(72)**Name of Inventor :**
1)OSADA Takashi
2)MATSUBARA Hiroki

(57) Abstract :
To provide a sterilization method for heat resistant bacterial spores with which an effective sterilization effect can be obtained under heating conditions milder than conventional conditions and which hardly affects the quality of an object to be sterilized. [Solution] A sterilization method comprising: a first heat treatment step the main purpose of which is damaging spores; and a second heat treatment step the main purpose of which is subsequently inactivating the damaged spores and in which the heat treatment is performed at a temperature lower than that in the first heat treatment step.

No. of Pages : 35 No. of Claims : 8

(12) PATENT APPLICATION PUBLICATION
(21) Application No.1619/MUMNP/2014 A
(19) INDIA
(22) Date of filing of Application :12/08/2014
(43) Publication Date : 08/05/2015

(54) Title of the invention : BATTERY MANAGEMENT APPARATUS AND METHOD

(51) International classification :B60L11/18,B60L1/00,H02J9/00
(31) Priority Document No :1200499.0
(32) Priority Date :13/01/2012
(33) Name of priority country :U.K.
(86) International Application No:PCT/GB2013/050045
Filing Date :11/01/2013
(87) International Publication No :WO 2013/104910
(61) Patent of Addition to Application Number :NA
Filing Date :NA
(62) Divisional to Application Number :NA
Filing Date :NA

(71)**Name of Applicant :**
1)CHINTALA Sandeep Kumar
Address of Applicant :Flat 93 Aspects 1 Throwley Way Sutton Surrey SM1 4FD U.K
(72)**Name of Inventor :**
1)CHINTALA Sandeep Kumar

(57) Abstract :
A battery management apparatus and method for use in an electrical vehicle has a plurality of individual batteries 34 provided within a battery pack 10. The battery pack is coupled to power vehicle traction 12 and a plurality of individually connectable vehicle appliances 18 26. A monitor keeps track of charge state by means of a battery monitor 44 on each battery relaying instant current to a processor 27. In a first embodiment a charge allocation profile for the whole battery pack 10 is used where different appliances 18 26 have different amounts of charge capacity allocated to them and are disconnected when discharge exceeds their allocation and are reconnected during charging when their charge is again found. In a second embodiment individual batteries 34 and appliances 18 26 are connected within a network configuration allowing anything to be connected to anything else. Battery 10 segments can be created each having one or more allocated individual batteries and each segment connected to selectable services 12 18 26 within the electric vehicle. Segmentation patterns can be changed. A segment charge allocation profile can be used within each segment in much the same way that the charge allocation profile can be used and changed for the first embodiment. Progressive charging and discharging of the battery is the end result.

No. of Pages : 33 No. of Claims : 36

(12) PATENT APPLICATION PUBLICATION
(19) INDIA
(22) Date of filing of Application :21/03/2013
(21) Application No.946/MUM/2013 A
(43) Publication Date : 08/05/2015

(54) Title of the invention : EMERGENCY HANDLE FOR SWITCHING DEVICE (NFPA COMPLAINCE)

(51) International classification	:H02B13/045, H01H9/20
(31) Priority Document No	:NA
(32) Priority Date	:NA
(33) Name of priority country	:NA
(86) International Application No	:NA
Filing Date	:NA
(87) International Publication No	: NA
(61) Patent of Addition to Application Number	:NA
Filing Date	:NA
(62) Divisional to Application Number	:NA
Filing Date	:NA

(71)**Name of Applicant :**
1)LARSEN & TOUBRO LTD.
Address of Applicant :L&T HOUSE, BALLARD ESTATE, MUMBAI-72, INDIA Maharashtra India
(72)**Name of Inventor :**
1)AMEYA M CHAUGHULE
2)SHUBHO SANYAL

(57) Abstract :
An emergency handle for operating switching device in the distribution panel is provided. The switching device is mounted on the rear side of the distribution panel and operatively connected to the operating handle knob using a plunger and a slotted cam mounted around the plunger. Operating mechanism consists of a base plate mounted on the panel and an operating handle knob fixed in the slotted escutcheon plate mounted over the base plate. A lock lever is provided on the base plate, one end of the lock lever is engaged to slotted cam in OFF condition. An interlock is provided in the escutcheon plate which operates when the cam is disengaged from the lock lever and a manual interlock defeat arrangement for opening the panel door in ON condition. Bezel assembly is mounted on the panel door and a projection from the bezel engages with the other end of the lock lever.

No. of Pages : 19 No. of Claims : 9

(12) PATENT APPLICATION PUBLICATION
(19) INDIA
(22) Date of filing of Application :21/03/2013
(21) Application No.947/MUM/2013 A
(43) Publication Date : 08/05/2015

(54) Title of the invention : ELECTRONIC TRIP UNIT FOR DIRECT CURRENT CIRCUIT BREAKERS.

(51) International classification	:H02H3/04, H03K17/00
(31) Priority Document No	:NA
(32) Priority Date	:NA
(33) Name of priority country	:NA
(86) International Application No	:NA
Filing Date	:NA
(87) International Publication No	: NA
(61) Patent of Addition to Application Number	:NA
Filing Date	:NA
(62) Divisional to Application Number	:NA
Filing Date	:NA

(71)**Name of Applicant :**
1)LARSEN & TOUBRO LTD.
Address of Applicant :L&T HOUSE, BALLARD ESTATE, MUMBAI-72, INDIA Maharashtra India
(72)**Name of Inventor :**
1)BHANWAR LAL BISHNOI
2)ROHIT BHATIA
3)PRAHLAD SUPEDA

(57) Abstract :
An electronic trip unit for direct current circuit breakers is disclosed, which comprises a tripper, a primary sensor unit, a secondary sensor unit, and a trip coil. The electronic trip unit further comprises a voltage circuitry, an isolation and amplification circuitry, a voltage signal conditioning unit, an override protection circuitry, a microcontroller, and a tripping circuitry. Shunt is used as primary sensor and current transformer and Rogowski coil are used as secondary sensor. The override protection circuitry further comprises a pick-up power supply and filtration circuitry and a current signal conditioning circuitry. The voltage circuitry gets input from main line terminals and powers the microcontroller 9 after step down, filtration and regulation of voltage, voltage circuitry 4 also provide voltage signal to the ADC of microcontroller. The primary sensor shunt provides voltage signal proportional to the current, to the ADC of microcontroller through an isolation & amplification circuitry. The secondary sensor having a current transformer powers up the electronic trip unit only in an event of transient short circuit condition; at same instant the Rogowski coil senses the current and gives a derivative signal to the override circuitry, which further gives signal to the microcontroller; thereafter upon making decision to trip as per the received signals and designed software code the microcontroller gives trip signal to the tripping circuitry that comprises IGBT or any switching device suitable for direct current application. After receiving the tripping signal the trip coil is actuated, and the circuit breaker is tripped.

No. of Pages : 13 No. of Claims : 9

(12) PATENT APPLICATION PUBLICATION
(19) INDIA
(22) Date of filing of Application :06/08/2014
(21) Application No.1581/MUMNP/2014 A
(43) Publication Date : 08/05/2015

(54) Title of the invention : MITIGATING CROSS DEVICE INTERFERENCE

(51) International classification :H04W16/14,H04W72/08
(31) Priority Document No :61/602816
(32) Priority Date :24/02/2012
(33) Name of priority country :U.S.A.
(86) International Application No :PCT/US2013/025410
Filing Date :08/02/2013
(87) International Publication No :WO 2013/126222
(61) Patent of Addition to Application Number :NA
Filing Date :NA
(62) Divisional to Application Number :NA
Filing Date :NA

(71)**Name of Applicant :**
1)QUALCOMM INCORPORATED
Address of Applicant :Attn: International IP Administration 5775 Morehouse Drive San Diego CA 92121 U.S.A.
(72)**Name of Inventor :**
1)SADEK Ahmed K.
2)KADOUS Tamer Adel

(57) Abstract :
A device in a wireless system may determine when communications of a first radio access technology (RAT) experience interference from communications of a second RAT and may alter the communications of at least the first RAT or the second RAT to reduce the interference. In some instances altering the communications include controlling a transmission rate to the second RAT based at least on a determined channel capacity.

No. of Pages : 37 No. of Claims : 24

(12) PATENT APPLICATION PUBLICATION
(19) INDIA
(22) Date of filing of Application :20/03/2013
(21) Application No.882/MUM/2013 A
(43) Publication Date : 08/05/2015

(54) Title of the invention : SELF POWER CAR

(51) International classification	:B60C23/20, H02N, B60C23/04
(31) Priority Document No	:NA
(32) Priority Date	:NA
(33) Name of priority country	:NA
(86) International Application No	:NA
Filing Date	:NA
(87) International Publication No	: NA
(61) Patent of Addition to Application Number	:NA
Filing Date	:NA
(62) Divisional to Application Number	:NA
Filing Date	:NA

(71)**Name of Applicant :**
1)Bhavsar Swapnil Chandrakant
Address of Applicant :M-64/768, Chitrakut Apartment Sola Road, Naranpura Ahmedabad-380063 Gujarat, India.
2)Jain Anjil Anvin
3)Shah Parin Kamalkumar
4)Dr. Vasani Rupesh Parmanand
(72)**Name of Inventor :**
1)Shah Parin Kamalkumar
2)Jain Anjil Anvin
3)Bhavsar Swapnil Chandrakant
4)Patel Bhupendra Laljibhai
5)Vasani Manthan Hitesh
6)Ganatra Tirth Mayur
7)Dr. Vasani Rupesh Parmanand

(57) Abstract :
The present invention a vehicle passing through a speed then the front tyre are connected with the generator gives mechanical energy and generator converts mechanical energy to electrical energy and the electrical energy store into battery and the battery is attached to controller, and the car uses electrical energy to drive with the help of motor attached with the rear tyre.

No. of Pages : 10 No. of Claims : 3

(12) PATENT APPLICATION PUBLICATION
(19) INDIA
(22) Date of filing of Application :20/03/2013
(21) Application No.883/MUM/2013 A
(43) Publication Date : 08/05/2015

(54) Title of the invention : A NOVEL LIFT POWER GENERATOR

(51) International classification	:F03D1/06, E04B 1/35
(31) Priority Document No	:NA
(32) Priority Date	:NA
(33) Name of priority country	:NA
(86) International Application No	:NA
Filing Date	:NA
(87) International Publication No	: NA
(61) Patent of Addition to Application Number	:NA
Filing Date	:NA
(62) Divisional to Application Number	:NA
Filing Date	:NA

(71)**Name of Applicant :**
1)Bhavsar Swapnil Chandrakant
Address of Applicant :M-64/768, Chitrakut Apartment Sola Road, Naranpura Ahmedabad-380063 Gujarat, India.
2)Jain Anjil Anvin
3)Shah Parin Kamalkumar
4)Dr. Vasani Rupesh Parmanand
(72)**Name of Inventor :**
1)Shah Parin Kamalkumar
2)Jain Anjil Anvin
3)Bhavsar Swapnil Chandrakant
4)Patel Bhupendra Laljibhai
5)Dr. Vasani Rupesh Parmanand

(57) Abstract :
The present invention of ˜A Novel Lift power generator™ can generate the power utilizing the up and down motion of the conventional ˜lifts™ that use a dead weight. The lift mechanism is situated at the top. A motor is used along with the set of the gears to run the lift. One shaft of this gear mechanism remains empty and freely rotates with the up and down motion of the lift. Here a generator is fitted to this empty shaft with a pulley and belt mechanism. So generator shaft will also turn (rotate) with up and down motion of the lift using these belt and pulley mechanism and power will be generated. This power is stored in the battery and it can be used to run further electric based applications.

No. of Pages : 11 No. of Claims : 3

(12) PATENT APPLICATION PUBLICATION
(21) Application No.958/MUM/2013 A
(19) INDIA
(22) Date of filing of Application :21/03/2013
(43) Publication Date : 08/05/2015

(54) Title of the invention : A SHUTTER ASSEMBLY MECHANISM FOR BUS BAR FIXED CONTACTS IN MOTOR CONTROL CENTER

(51) International classification :H02B11/12
(31) Priority Document No :NA
(32) Priority Date :NA
(33) Name of priority country :NA
(86) International Application No :NA
Filing Date :NA
(87) International Publication No : NA
(61) Patent of Addition to Application Number :NA
Filing Date :NA
(62) Divisional to Application Number :NA
Filing Date :NA

(71)**Name of Applicant :**
1)LARSEN & TOUBRO LIMITED
Address of Applicant :LARSEN & TOUBRO LIMITED, L & T HOUSE, BALLARD ESTATE, MUMBAI 400 001, STATE OF MAHARASHTRA, INDIA
(72)**Name of Inventor :**
1)SHAH, TUSHAR, N.
2)LASTE, ROHIDAS, H.

(57) Abstract :
The present invention provides a shutter assembly for a bus bar fixed contacts in a motor control center for automatically closes off access to the bus bar(s), therefore preventing accidental contact with the bus-bar(s) fixed contact and draw out contact(s). The present invention provides an automatic shutter operating mechanism that will close on its own as draw-out unit in contact with the bus bars is removed from the enclosure, without any action being taken by an operator and automatically open the shutter as the unit is inserted back into the enclosure to make contact with the bus bars. The present disclosed safety shutter assembly mechanism reduces the risk of inadvertent electrical contact by a technician installing, operating, withdrawing or removing MCC units / modules / feeders / buckets from the enclosure.

No. of Pages : 30 No. of Claims : 13

(12) PATENT APPLICATION PUBLICATION
(21) Application No.959/MUM/2013 A
(19) INDIA
(22) Date of filing of Application :21/03/2013
(43) Publication Date : 08/05/2015

(54) Title of the invention : AN ARRANGEMENT TO ACHIEVE FAULT FREE BUSBAR SYSTEM IN SWITCHBOARD AND A METHOD FOR VERSATILE PHASE SEPARATION THEREOF

(51) International classification	:H01R25/16, H01B17/56
(31) Priority Document No	:NA
(32) Priority Date	:NA
(33) Name of priority country	:NA
(86) International Application No	:NA
Filing Date	:NA
(87) International Publication No	: NA
(61) Patent of Addition to Application Number	:NA
Filing Date	:NA
(62) Divisional to Application Number	:NA
Filing Date	:NA

(71)**Name of Applicant :**
1)LARSEN & TOUBRO LIMITED
Address of Applicant :LARSEN & TOUBRO LIMITED, L & T HOUSE, BALLARD ESTATE, MUMBAI 400001, STATE OF MAHARASHTRA, INDIA
(72)**Name of Inventor :**
1)LASTE, ROHIDAS, H.
2)JAIN, AKSHAY, V.

(57) Abstract :
The present invention provides an arrangement for physical segregation/isolation between bus bar(s) of switchboard. The arrangement comprises: a insulating support(s) for providing isolation between the bus bars and a non conducting metallic member(s); a insulating phase barrier(s) for providing isolation between phase(s) of the bus bar(s). The insulating phase barrier(s) is accommodates in the insulating support for providing physical segregation between the busbars of the switchboard, therefore reducing short circuit fault(s) between a phase(s) or between the phase(s) and earth of the busbar (s) of the switchboard.

No. of Pages : 16 No. of Claims : 7

(12) PATENT APPLICATION PUBLICATION
(19) INDIA
(22) Date of filing of Application :30/07/2014
(21) Application No.1534/MUMNP/2014 A
(43) Publication Date : 08/05/2015

(54) Title of the invention : METHOD AND SYSTEM FOR PREVENTING AND TREATING PESTS BY USING SMOKE FROM BIOMASS POWER PLANT IN SEALED SPACE

(51) International classification	:A01N59/04,A01G9/18,B01D53/053
(31) Priority Document No	:201210001912.1
(32) Priority Date	:05/01/2012
(33) Name of priority country	:China
(86) International Application No	:PCT/CN2012/087609
Filing Date	:27/12/2012
(87) International Publication No	:WO 2013/102415
(61) Patent of Addition to Application Number	:NA
Filing Date	:NA
(62) Divisional to Application Number	:NA
Filing Date	:NA

(71)**Name of Applicant :**
1)ZHONGYING CHANGJIANG INTERNATIONAL NEW ENERGY INVESTMENT CO. LTD
Address of Applicant :T1 jiangxia Avenue Eastlake Newtech Development Zone Wuhan Hubei 430223 China
(72)**Name of Inventor :**
1)LI Wanli
2)LI Jiangchuan
3)GONG Hao
4)LUO Zhixiang

(57) Abstract :
A method and system for preventing and treating pests by using smoke from a biomass power plant in a sealed space. The smoke from a biomass power plant is processed to obtain processed smoke with the volume concentration of carbon dioxide being greater than 85% and prevention and treatment processing is performed on pests in a sealed space by adopting mode I or mode II or a combination thereof mode I: the processing of continuously filling processed smoke into a sealed space during a fallow period; and mode II: the processing of filling when pests are found on crops during the planting of crops in a sealed space processed smoke into the sealed space alternately and repeatedly. The system comprises a smoke processing device a processed smoke tank (4) a control unit (6) a first pressure monitoring sensor (13) and a carbon dioxide concentration monitoring sensor (14) and the like. The prevention and treatment method and system achieve a desirable effect of pest prevention and treatment in a sealed space and the prevention and treatment is safe.

No. of Pages : 29 No. of Claims : 11

(12) PATENT APPLICATION PUBLICATION
(19) INDIA
(22) Date of filing of Application :30/07/2014
(21) Application No.1536/MUMNP/2014 A
(43) Publication Date : 08/05/2015

(54) Title of the invention : ELECTRICAL CHARGING/DISCHARGING CONTROLLER CHARGING CONTROL METHOD DISCHARGING CONTROL METHOD AND PROGRAM

(51) International classification :B60L11/18,B60L3/00,B60L9/18
(31) Priority Document No :2012-021172
(32) Priority Date :02/02/2012
(33) Name of priority country :Japan
(86) International Application No :PCT/JP2013/052357
Filing Date :01/02/2013
(87) International Publication No:WO 2013/115365
(61) Patent of Addition to Application Number :NA
Filing Date :NA
(62) Divisional to Application Number :NA
Filing Date :NA

(71)**Name of Applicant :**
1)MITSUBISHI HEAVY INDUSTRIES LTD.
Address of Applicant :16 5 Konan 2 chome Minato ku Tokyo 1088215 Japan
(72)**Name of Inventor :**
1)MORITA Katsuaki
2)KAMEI SHUNSUKE
3)KONO Takayuki
4)WAKASUGI Kazuyuki

(57) Abstract :
A peak cut power calculation unit (154) calculates the peak cut power capable of being transmitted in a cable (200) as monotonic non increasing power with respect to the resistor value of the cable (200) between a vehicle (100) and a substation. In addition a peak cut unit (156) controls the electrical charging and discharging of a secondary battery (140) at the power of the difference of the negative load power and the transmitted peak cut power when the negative load power is at least the peak cut power.

No. of Pages : 42 No. of Claims : 11

(12) PATENT APPLICATION PUBLICATION
(19) INDIA
(22) Date of filing of Application :30/07/2014
(21) Application No.1537/MUMNP/2014 A
(43) Publication Date : 08/05/2015

(54) Title of the invention : GRAIN ORIENTED ELECTRICAL STEEL SHEET

(51) International classification :C22C38/00,B23K15/00,B23K26/00
(31) Priority Document No :2012-025238
(32) Priority Date :08/02/2012
(33) Name of priority country :Japan
(86) International Application No :PCT/JP2013/000701
Filing Date :08/02/2013
(87) International Publication No :WO 2013/118512
(61) Patent of Addition to Application Number :NA
Filing Date :NA
(62) Divisional to Application Number :NA
Filing Date :NA

(71)**Name of Applicant :**
1)JFE STEEL CORPORATION
Address of Applicant :2 3 Uchisaiwai cho 2 chome Chiyoda ku Tokyo 1000011 Japan
(72)**Name of Inventor :**
1)OKABE Seiji
2)TAKAJO Shigehiro
3)KAWANO Takashi

(57) Abstract :
A grain oriented electrical steel sheet with reduced noise when fabricated as a transformer can be obtained by making the respective lengths (d) of the plastic strain regions of the steel sheet in the transverse direction to be 0.05 to 0.4 mm and the ratio (d/w) of the total (d) of the lengths (d) to the total (w) of the respective introduction intervals (w) for the plastic strain regions to be 0.2 to 0.6 according to the present invention.

No. of Pages : 20 No. of Claims : 3

(12) PATENT APPLICATION PUBLICATION
(19) INDIA
(22) Date of filing of Application :22/03/2013
(21) Application No.976/MUM/2013 A
(43) Publication Date : 08/05/2015

(54) Title of the invention : INDEPENDENTLY OPERATED TWIN CAVITY HYDRAULIC TIRE CURING PRESS

(51) International classification	:B29C33/02, B29D30/06
(31) Priority Document No	:NA
(32) Priority Date	:NA
(33) Name of priority country	:NA
(86) International Application No	:NA
Filing Date	:NA
(87) International Publication No	: NA
(61) Patent of Addition to Application Number	:NA
Filing Date	:NA
(62) Divisional to Application Number	:NA
Filing Date	:NA

(71)**Name of Applicant :**
1)LARSEN & TOUBRO LIMITED
Address of Applicant :LARSEN & TOUBRO LIMITED L&T HOUSE, BALLARD ESTATE, MUMBAI-400001, MAHARASHTRA STATE, INDIA
(72)**Name of Inventor :**
1)SUDHARSANAN NATESON
2)MUTHU ARUNACHALAM
3)AJU JAMES
4)DEEPAK SUSEELAN NAIR
5)THAKKADI MAHMOOD MOHAMED IBRAHIM
6)RAJMOHAN KALIYAMOORTHY
7)GANESH RAJA KARUPPUSAMY

(57) Abstract :
The present invention provides an independently operated twin cavity hydraulic tire curing press having a base, an upper housing, an E-lock ring, a plurality of guide columns, at least one hydraulic lift cylinder, at least one loader, at least one unloader and at least one squeeze cylinder. The tire curing press is capable of locking and holding the upper housing in two different positions during curing process provides infinite adjustment of mold height within a particular tire range ensuring uniform squeezing of mold with E-Locking and squeeze cylinder arrangement. The arrangement of the press in V or Inverted V orientation facilitates foot print space reduction. The support structures are isolated from getting loaded during curing process ensuring loader &unloader repeatability. The press also facilitates curing of tires of different height with same/different curing periods in either of the cavities.

No. of Pages : 18 No. of Claims : 4

(12) PATENT APPLICATION PUBLICATION
(19) INDIA
(22) Date of filing of Application :28/05/2014
(21) Application No.1037/MUMNP/2014 A
(43) Publication Date : 08/05/2015

(54) Title of the invention : ANTIMICROBIAL COMPOSITION

(51) International classification	:A01P1/00,A01N31/08,A01N31/06
(31) Priority Document No	:61/567355
(32) Priority Date	:06/12/2011
(33) Name of priority country	:U.S.A.
(86) International Application No	:PCT/EP2012/074402
Filing Date	:05/12/2012
(87) International Publication No	:WO 2013/083581
(61) Patent of Addition to Application Number	:NA
Filing Date	:NA
(62) Divisional to Application Number	:NA
Filing Date	:NA

(71)**Name of Applicant :**
1)UNILEVER PLC
Address of Applicant :a company registered in England and Wales under company no. 41424 of Unilever House 100 Victoria Embankment London Greater London EC4Y 0DY U.K.
(72)**Name of Inventor :**
1)CORNMELL RobertJoseph
2)DIEHL Megan Anne
3)GOLDING Stephen
4)HARP John Robert
5)STOTT Ian Peter
6)THOMPSON Katherine Mary
7)TRUSLOW Carol Lynn

(57) Abstract :
The present invention relates to an antimicrobial composition and a method for disinfection involving the antimicrobial composition. It particularly relates to an antimicrobial composition for personal cleaning oral care or hard surface cleaning applications. It was found that compositions comprising one or more monosubstituted phenols terpineol and a carrier provide synergistic antimicrobial action. In a preferred aspect the composition also comprises 1 to 80 % wt of one or more surfactants.

No. of Pages : 75 No. of Claims : 14

(12) PATENT APPLICATION PUBLICATION
(19) INDIA
(22) Date of filing of Application :25/03/2013
(21) Application No.1093/MUM/2013 A
(43) Publication Date : 08/05/2015

(54) Title of the invention : ROLLING SHOE CHUCK ASSEMBLY IN LOADER AND UNLOADER OF TIRE CURING PRESS

(51) International classification :B29D30/06
(31) Priority Document No :NA
(32) Priority Date :NA
(33) Name of priority country :NA
(86) International Application No :NA
Filing Date :NA
(87) International Publication No : NA
(61) Patent of Addition to Application Number :NA
Filing Date :NA
(62) Divisional to Application Number :NA
Filing Date :NA

(71)**Name of Applicant :**
1)LARSEN & TOUBRO LIMITED
Address of Applicant :LARSEN & TOUBRO LIMITED L&T HOUSE, BALLARD ESTATE, MUMBAI-400001, MAHARASHTRA STATE, INDIA
(72)**Name of Inventor :**
1)SUDHARSANAN NATESON
2)MUTHU ARUNACHALAM

(57) Abstract :
Disclosed is a chuck assembly in loader and unloader of a tire curing press. The chuck assembly is formed by a circular plate, a plurality of sliding shoes, a pair of sliding cam plate and a pneumatic cylinder which automatically grabs a uncured tire from the conveyor/tire holder and places it on to a center mechanism of the tire curing press prior to the closing of the tire curing press and commencement of the curing cycle. Further, the chuck assembly picks up the cured tire from the center mechanism after the tire curing press opens and the curing cycle is completed and places it on the conveyor belt.

No. of Pages : 26 No. of Claims : 5

(12) PATENT APPLICATION PUBLICATION
(19) INDIA
(22) Date of filing of Application :20/03/2013
(21) Application No.940/MUM/2013 A
(43) Publication Date : 08/05/2015

(54) Title of the invention : A COMPACT POWER GENERATOR STEAM ENGINE

(51) International classification :F01K17/04,F01K17/02
(31) Priority Document No :NA
(32) Priority Date :NA
(33) Name of priority country :NA
(86) International Application No :NA
Filing Date :NA
(87) International Publication No : NA
(61) Patent of Addition to Application Number :NA
Filing Date :NA
(62) Divisional to Application Number :NA
Filing Date :NA

(71)**Name of Applicant :**
1)Bhavsar Swapnil Chandrakant
Address of Applicant :M-64/768, Chitrakut Apartment Sola Road, Naranpura Ahmedabad-380063 Gujarat, India.
2)Jain Anjil Anvin
3)Shah Parin Kamalkumar
4)Dr. Vasani Rupesh Parmanand
(72)**Name of Inventor :**
1)Dr. Vasani Rupesh Parmanand
2)Shah Parin Kamalkumar
3)Jain Anjil Anvin
4)Bhavsar Swapnil Chandrakant
5)Patel Bhupendra Laljibhai

(57) Abstract :
The present invention a specially design boiler from steam passing is through a specially design turbine the turbine gives mechanical energy and generator converts mechanical energy to electrical energy and the electrical energy store into battery and the battery is attached to inverter, and the inverter gives electrical energy to the street lights and other components.

No. of Pages : 10 No. of Claims : 3

(12) PATENT APPLICATION PUBLICATION
(21) Application No.980/MUM/2013 A
(19) INDIA
(22) Date of filing of Application :22/03/2013
(43) Publication Date : 08/05/2015

(54) Title of the invention : METHOD TO TRANSFER DISCRETE INFORMATION ON SINGLE WIRE

(51) International classification :B65H39/14
(31) Priority Document No :NA
(32) Priority Date :NA
(33) Name of priority country :NA
(86) International Application No :NA
Filing Date :NA
(87) International Publication No : NA
(61) Patent of Addition to Application Number :NA
Filing Date :NA
(62) Divisional to Application Number :NA
Filing Date :NA

(71)**Name of Applicant :**
1)LARSEN & TOUBRO LIMITED
Address of Applicant :LARSEN & TOUBRO LIMITED L&T HOUSE, BALLARD ESTATE, P. O. BOX: 278, MUMBAI 400 001, INDIA Maharashtra India
(72)**Name of Inventor :**
1)BHANWAR LAL BISHNOI
2)ZAINAB VEJLANI

(57) Abstract :
The present invention provides a method for transfer of discrete information of a circuit breaker on a single wire. The method comprising steps of initialization of a timer and ports for transmitting the signals. Thereafter, loading the timer count from a lookup table. Further, getting inputs from an external interface. Also, toggling the port pin when timer expires for transmitting the signals. Further, initialization of a timer and ports for receiving the signals. Thereafter, counting number of high-to-low transition in predefined duration. Further, checking the counted number in the data range of n, Thereafter, checking next counted number if the data range is not equal to n, Also, acting according to the data range n if the data range is equal to m,. Thereafter, providing visual acknowledgement of data change.

No. of Pages : 10 No. of Claims : 1

(12) PATENT APPLICATION PUBLICATION
(21) Application No.981/MUM/2013 A
(19) INDIA
(22) Date of filing of Application :22/03/2013
(43) Publication Date : 08/05/2015

(54) Title of the invention : A SHIELDING DEVICE FOR AN ARC-CHUTE IN A CIRCUIT BREAKER

(51) International classification :H01H9/34
(31) Priority Document No :NA
(32) Priority Date :NA
(33) Name of priority country :NA
(86) International Application No :NA
Filing Date :NA
(87) International Publication No : NA
(61) Patent of Addition to Application Number :NA
Filing Date :NA
(62) Divisional to Application Number :NA
Filing Date :NA

(71)**Name of Applicant :**
1)LARSEN & TOUBRO LIMITED
Address of Applicant :LARSEN & TOUBRO LIMITED L&T HOUSE, BALLARD ESTATE, P. O. BOX: 278, MUMBAI 400 001, INDIA Maharashtra India
(72)**Name of Inventor :**
1)DEEPAK M OCHANI
2)PALLAVI D KHATI

(57) Abstract :
Disclosed is a shielding device for an are-chute assembly in a circuit breaker. The shielding device creates a barrier between arc chamber and mechanism area and thereby helps to restrict the arc by-products to enter in mechanism area and knob area. Further, the shielding device provide a protection to the internal components of the circuit breaker during an arc event.

No. of Pages : 13 No. of Claims : 1

(12) PATENT APPLICATION PUBLICATION
(19) INDIA
(22) Date of filing of Application :30/05/2014
(21) Application No.1050/MUMNP/2014 A
(43) Publication Date : 08/05/2015

(54) Title of the invention : FERROFLUID MODIFIED FILL FLUID FOR PRESSURE TRANSMITTERS

(51) International classification :G01L9/00,G01L9/12,G01L9/14
(31) Priority Document No :13/311714
(32) Priority Date :06/12/2011
(33) Name of priority country :U.S.A.
(86) International Application No :PCT/US2012/063804
Filing Date :07/11/2012
(87) International Publication No :WO 2013/085656
(61) Patent of Addition to Application Number :NA
Filing Date :NA
(62) Divisional to Application Number :NA
Filing Date :NA

(71)**Name of Applicant :**
1)ROSEMOUNT INC.
Address of Applicant :8200 Market Boulevard Chanhassen Minnesota 55317 U.S.A.
(72)**Name of Inventor :**
1)HEDTKE Robert Carl

(57) Abstract :
A pressure transmitter for measuring a pressure of a process fluid comprises a transmitter housing a pressure sensor a hydraulic relay system a ferrofluid and transmitter electronics. The capacitance based pressure sensor senses the pressure of the process fluid and is disposed within the housing. The hydraulic relay system comprises an isolation diaphragm positioned on an exterior of the transmitter housing and an isolation tube extending from the pressure sensor to the isolation diaphragm. The ferrofluid is located in the isolation tube to transmit a change in the pressure of the process fluid at the isolation diaphragm to the sensor. The transmitter electronics are positioned within the housing and are configured to receive and condition a pressure signal from the pressure sensor.

No. of Pages : 30 No. of Claims : 34

(12) PATENT APPLICATION PUBLICATION
(19) INDIA
(22) Date of filing of Application :06/08/2014
(21) Application No.1590/MUMNP/2014 A
(43) Publication Date : 08/05/2015

(54) Title of the invention : SYSTEM AND METHOD FOR SECURE OFFLINE PAYMENT TRANSACTIONS USING A PORTABLE COMPUTING DEVICE

(51) International classification :G06Q20/32
(31) Priority Document No :61/585714
(32) Priority Date :12/01/2012
(33) Name of priority country :U.S.A.
(86) International Application No :PCT/US2012/069420
Filing Date :13/12/2012
(87) International Publication No :WO 2013/106159
(61) Patent of Addition to Application Number :NA
Filing Date :NA
(62) Divisional to Application Number :NA
Filing Date :NA

(71)**Name of Applicant :**
1)QUALCOMM INCORPORATED
Address of Applicant :Attn: International IP Administration 5775 Morehouse Drive San Diego CA 92121 U.S.A.
(72)**Name of Inventor :**
1)AZEN Jon
2)MENENDEZ Jose
3)KRAAR Eric
4)ROSE Greg

(57) Abstract :
Disclosed is a system and method that provides a merchant associated with a point of sale (POS) system and a consumer associated with a portable computing device (PCD) to complete a purchase transaction without transmitting or presenting confidential payment credentials. In an exemplary embodiment sound is used to transmit data between the POS and the PCD. A payment request is rendered on the PCD. The consumer reviews and authorizes via a unique cryptographic signature. The merchant approves via addition of its unique cryptographic signature. A remote service in communication with the POS verifies the signatures via previously registered public keys. The transaction is then settled to a consumer account. Confirmation is returned to the POS and PCD. Advantageously the transaction is commenced and completed without the PCD being online. Further the consumer payment credentials are not stored on the PCD or transmitted from the PCD to the merchant POS system.

No. of Pages : 50 No. of Claims : 80

(12) PATENT APPLICATION PUBLICATION
(19) INDIA
(22) Date of filing of Application :06/08/2014
(21) Application No.1591/MUMNP/2014 A
(43) Publication Date : 08/05/2015

(54) Title of the invention : CRISP BREAD SNACK FOODS

(51) International classification :A21D13/00
(31) Priority Document No :13/363809
(32) Priority Date :01/02/2012
(33) Name of priority country :U.S.A.
(86) International Application No :PCT/US2013/024444
Filing Date :01/02/2013
(87) International Publication No :WO 2013/116724
(61) Patent of Addition to Application Number :NA
Filing Date :NA
(62) Divisional to Application Number :NA
Filing Date :NA

(71)**Name of Applicant :**
1)FRITO LAY NORTH AMERICA INC.
Address of Applicant :7701 Legacy Drive Plano TX 75024 4099 U.S.A. U.S.A.
(72)**Name of Inventor :**
1)ANAND Ashish
2)PUPPALA Vamshidhar
3)TRINH Ngoc
4)KLEINBACH SAUTER Heidi
5)SRIVASTAVA Pramila

(57) Abstract :
Crisp bread snack food products based on traditional bread recipes from around the world and a method for producing the products on a commercial processing line. The crisp bread snack food products are shelf stable and have flavors substantially similar to the traditional breads.

No. of Pages : 59 No. of Claims : 56

(12) PATENT APPLICATION PUBLICATION
(21) Application No.1592/MUMNP/2014 A
(19) INDIA
(22) Date of filing of Application :06/08/2014
(43) Publication Date : 08/05/2015

(54) Title of the invention : SCAN BASED SLIDING WINDOW IN CONTEXT DERIVATION FOR TRANSFORM COEFFICIENT CODING

(51) International classification :H04N7/26
(31) Priority Document No :61/606356
(32) Priority Date :02/03/2012
(33) Name of priority country :U.S.A.
(86) International Application No :PCT/US2013/028588
Filing Date :01/03/2013
(87) International Publication No :WO 2013/130952
(61) Patent of Addition to Application Number :NA
Filing Date :NA
(62) Divisional to Application Number :NA
Filing Date :NA

(71)**Name of Applicant :**
1)QUALCOMM INCORPORATED
Address of Applicant :ATTN: International IP Administration 5775 Morehouse Drive San Diego California 92121 1714 U.S.A U.S.A.
(72)**Name of Inventor :**
1)SOLE ROJALS Joel
2)JOSHI Rajan Laxman
3)CHIEN Wei Jung
4)SEREGIN Vadim
5)CHEN Jianle
6)KARCZEWICZ Marta

(57) Abstract :
A video coding process that includes defining a context derivation neighborhood for one of a plurality of transform coefficients based on a transform coefficient scan order. The process also includes determining a context for the one of the plurality of transform coefficients based on the context derivation neighborhood. The process also includes coding the one of the plurality of transform coefficients based on the determined context.

No. of Pages : 75 No. of Claims : 42

(12) PATENT APPLICATION PUBLICATION
(21) Application No.994/MUM/2013 A
(19) INDIA
(22) Date of filing of Application :22/03/2013
(43) Publication Date : 08/05/2015

(54) Title of the invention : IMPROVED METHOD FOR DETECTING BAUD RATE IN MODBUS COMMUNICATION AND A SYSTEM THEREOF

(51) International classification :G06F13/38
(31) Priority Document No :NA
(32) Priority Date :NA
(33) Name of priority country :NA
(86) International Application No :NA
Filing Date :NA
(87) International Publication No : NA
(61) Patent of Addition to Application Number :NA
Filing Date :NA
(62) Divisional to Application Number :NA
Filing Date :NA

(71)**Name of Applicant :**
1)LARSEN & TOUBRO LIMITED
Address of Applicant :L & T HOUSE, BALLARD ESTATE, MUMBAI 400 001, STATE OF MAHARASHTRA, INDIA
(72)**Name of Inventor :**
1)BISHNOI, BHANWAR, LAL
2)SHAIKH, USUFE
3)TRIPATHY, PURBA

(57) Abstract :
The present invention provides a method for baud rate detection without loss of incoming data. The method comprises steps: transmitting a frame on a receive data line for configuring and assigning an address to a slave device for transmitting the incoming data, converting the address into a binary value and storing the binary value into a register, checking transition from high to low or low to high by comparing each bit of the address with a pervious bit, counting the number of consecutive bit(s) of the transits bit (s), when a first transition is detected, and stopping the counting, when second transition is detected, generating an interrupt for initializing a timer for computing a time delay between the consecutive transition(s) on the data line and calculating a bit width; comparing the bit width with a value(s) stored in a look up table for obtaining a baud rate for the slave device, storing the baud rate having the incoming data to a receiver buffer for establishing a communication. This baud rate detection is independent of the data being sent / received and the data being sent is not lost

No. of Pages : 14 No. of Claims : 8

(12) PATENT APPLICATION PUBLICATION
(19) INDIA
(22) Date of filing of Application :20/03/2013
(21) Application No.938/MUM/2013 A
(43) Publication Date : 08/05/2015

(54) Title of the invention : A RAIN POWER GENERATOR WITH WATER PURIFYING & HARVESTING UNIT

(51) International classification	:F03B13/00, E03B3/02, E04B2/00
(31) Priority Document No	:NA
(32) Priority Date	:NA
(33) Name of priority country	:NA
(86) International Application No	:NA
Filing Date	:NA
(87) International Publication No	: NA
(61) Patent of Addition to Application Number	:NA
Filing Date	:NA
(62) Divisional to Application Number	:NA
Filing Date	:NA

(71)**Name of Applicant :**
1)Dr. Vasani Rupesh Parmanand
Address of Applicant :07, Aditraj Bunglows, Near Nandanvan-5, B/h Kalatirth Apartment, Prernatirth Derasar Road, Jodhpur, Ahmedabad-380015. Gujarat, India.
2)Shah Parin Kamalkumar
3)Jain Anjil Anvin
4)Bhavsar Swapnil Chandrakant
(72)**Name of Inventor :**
1)Dr. Vasani Rupesh Parmanand
2)Shah Parin Kamalkumar
3)Jain Anjil Anvin
4)Bhavsar Swapnil Chandrakant
5)Patel Bhupendra Laljibhai

(57) Abstract :
The present invention a rain water passing through a specially design converging pipe to the turbine the rain power generator gives mechanical energy and generator converts mechanical energy to electrical energy and the electrical energy store into battery and the battery is attached to controller, and the purifying unit is also attached in the unit and the water is stored in the container.

No. of Pages : 13 No. of Claims : 3

(12) PATENT APPLICATION PUBLICATION
(19) INDIA
(22) Date of filing of Application :20/03/2013
(21) Application No.939/MUM/2013 A
(43) Publication Date : 08/05/2015

(54) Title of the invention : A COMPACT POWER GENERATOR STEAM ENGINE

(51) International classification :F01K17/04,F01K17/02
(31) Priority Document No :NA
(32) Priority Date :NA
(33) Name of priority country :NA
(86) International Application No :NA
Filing Date :NA
(87) International Publication No : NA
(61) Patent of Addition to Application Number :NA
Filing Date :NA
(62) Divisional to Application Number :NA
Filing Date :NA

(71)**Name of Applicant :**
1)Bhavsar Swapnil Chandrakant
Address of Applicant : Gujarat India
2)Jain Anjil Anvin
3)Shah Parin Kamalkumar
4)Dr. Vasani Rupesh Parmanand
(72)**Name of Inventor :**
1)Dr. Vasani Rupesh Parmanand
2)Shah Parin Kamalkumar
3)Jain Anjil Anvin
4)Bhavsar Swapnil Chandrakant
5)Patel Bhupendra Laljibhai

(57) Abstract :
The present invention a vehicle exhaust is passed through a small turbine that gives mechanical energy and generator converts mechanical energy to electrical energy and the electrical energy store into battery and the battery is attached to circuit, and the circuit gives electrical energy to the battery and small device will run through the battery. The exhaust gas is also purify in the specially design unit.

No. of Pages : 12 No. of Claims : 3

(12) PATENT APPLICATION PUBLICATION
(21) Application No.972/MUM/2013 A
(19) INDIA
(22) Date of filing of Application :21/03/2013
(43) Publication Date : 08/05/2015

(54) Title of the invention : AN IMPROVED PROCESS FOR PREPARATION OF BORTEZOMIB

(51) International classification :C07F5/02
(31) Priority Document No :NA
(32) Priority Date :NA
(33) Name of priority country :NA
(86) International Application No :NA
Filing Date :NA
(87) International Publication No : NA
(61) Patent of Addition to Application Number :NA
Filing Date :NA
(62) Divisional to Application Number :NA
Filing Date :NA

(71)**Name of Applicant :**
1)CADILA HEALTHCARE LIMITED
Address of Applicant :CADILA HEALTHCARE LTD; PLOT NO. 26-29 & 31, DABHASA-UMARAYA ROAD, VILL. DABHASA-391440, TAL. PADRA, DIST. VADODARA, GUJARAT, INDIA
(72)**Name of Inventor :**
1)DWIVEDI SHRIPRAKASH DHAR
2)SINGH KUMAR KAMLESH
3)NARODE SUNIL DNYANESHWAR

(57) Abstract :
The present invention relates to an improved process for preparation of bortezomib. In particular, the invention relates to the improved process for the preparation of substantially pure bortezomib.

No. of Pages : 26 No. of Claims : 10

(12) PATENT APPLICATION PUBLICATION
(19) INDIA
(22) Date of filing of Application :13/08/2014
(21) Application No.1627/MUMNP/2014 A
(43) Publication Date : 08/05/2015

(54) Title of the invention : MACHINE AND METHOD TO CHEMICALLY ENGRAVE A PLATE OF STAINLESS STEEL

(51) International classification :C23F1/02,C23F1/08,H05K3/06
(31) Priority Document No :NA
(32) Priority Date :NA
(33) Name of priority country :NA
(86) International Application No :PCT/IB2012/000361
Filing Date :10/02/2012
(87) International Publication No :WO 2013/117951
(61) Patent of Addition to Application Number :NA
Filing Date :NA
(62) Divisional to Application Number :NA
Filing Date :NA

(71)**Name of Applicant :**
1)THE DILLER CORPORATION
Address of Applicant :10155 Reading Road Cincinnati Ohio OH 45241 U.S.A.
(72)**Name of Inventor :**
1)DUPUY Franck
2)HARMAND Jo«l
3)MARCOS Inocencio
4)LAPEYRE Fran§ois

(57) Abstract :
Chemical engraving machine to engrave a plate of stainless steel (8) moved along an horizontal direction (X) said machine comprising a base (10) an acid liquid circuit (5) adapted to chemically attack said plate of stainless steel at locations where it is not protected by a protection mask (7) a lower guiding device (1) an upper guiding device (2) the lower and upper guiding devices (1 2) being configured to maintain said plate of stainless steel substantially vertically a nozzle support (3) bearing a plurality of spraying nozzles (4) projecting horizontally the acid liquid toward the plate of stainless steel (8). Method to chemically engrave a plate of stainless steel in a vertical position.

No. of Pages : 17 No. of Claims : 15

(12) PATENT APPLICATION PUBLICATION
(21) Application No.828/MUM/2013 A
(19) INDIA
(22) Date of filing of Application :19/03/2013
(43) Publication Date : 08/05/2015

(54) Title of the invention : A VARIABLE VOLUME PISTON CYLINDER ASSEMBLY

(51) International classification :E21B43/12
(31) Priority Document No :NA
(32) Priority Date :NA
(33) Name of priority country :NA
(86) International Application No :NA
Filing Date :NA
(87) International Publication No : NA
(61) Patent of Addition to Application Number :NA
Filing Date :NA
(62) Divisional to Application Number :NA
Filing Date :NA

(71)**Name of Applicant :**
1)AJINKYA RAVINDRA KOTTAWAR
Address of Applicant :201, GURDEV NAGAR, UMARSARA, YAVATMAL, 445001, MAHARASHTRA, INDIA
(72)**Name of Inventor :**
1)AJINKYA RAVINDRA KOTTAWAR
2)BHUSHAN PANDURANG KHARTADE
3)ANKUSH KISHOR CHANDURKAR
4)NIKHIL PRABHAKARRAO PAJGADE
5)AVINASH HARIDAS SAHARE

(57) Abstract :
A variable volume piston cylinder assembly for use in internal combustion (IC) engine is disclosed. The variable volume piston cylinder assembly comprises a plurality of cylinders disposed into one another in a telescopic manner constituting an inner cylinder, a middle cylinder and an outer cylinder. A piston is provided inside the inner cylinder so as to constitute an inner piston and cylinder assembly. A locking rod, having locking strips provided therewith, is provided to lock the inner cylinder and middle cylinder therewith and to transfer reciprocating movement of the pistons to a crank and shaft assembly of the engine. An inlet valve is provided with each of the piston and cylinder assembly to supply air-fuel mixture the piston and cylinder assembly. An outlet valve is provided with each of the piston and cylinder assembly to facilitate exit of the burnt gases from the piston and cylinder assembly. A spark plug is provided with each of the piston and cylinder assembly to ignite the air-fuel mixture inside the piston and cylinder assembly. And plurality of holding rods is provided to hold and release the locking discs as and when required.

No. of Pages : 21 No. of Claims : 10

(12) PATENT APPLICATION PUBLICATION
(19) INDIA
(22) Date of filing of Application :06/08/2014
(21) Application No.1598/MUMNP/2014 A
(43) Publication Date : 08/05/2015

(54) Title of the invention : AN AUTOMATED WIDE RANGING ANTI HAIL PROTECTION METHOD AND A NETWORK

(51) International classification :A01G15/00,A01G13/00
(31) Priority Document No :AM20120049
(32) Priority Date :20/03/2012
(33) Name of priority country :Armenia
(86) International Application No :PCT/AM2012/000003
Filing Date :09/07/2012
(87) International Publication No :WO 2013/138824
(61) Patent of Addition to Application Number :NA
Filing Date :NA
(62) Divisional to Application Number :NA
Filing Date :NA

(71)**Name of Applicant :**
1)ECOSERV REMOTE OBSERVATION CENTRE CO. LTD.
Address of Applicant :2 G. Njdeh str. apt. 24 Yerevan 0006 Armenia
(72)**Name of Inventor :**
1)ARAKELYAN Artashes

(57) Abstract :
The present invention relates to hail detection warning prevention. An automated method of wide ranging anti hail protection including reception of sky proper radiothermal emission in M sites its comparison with corresponding thresholds generation command signals to detonate combustible gas and to direct shock waves upwardly to the sky generation and transmission alert signals reception of transmitted alert signals in each M sites comparison with proper code signals of that site and setting alert operational mode of sonic generator. An automated network of anti hail protection including M hail preventing sonic cannons set in M sites of anti hail protection area any of which comprises an antenna a radiometric receiver a controlled compensation device a controlled multi channel threshold system a wamer a transmitter a receiver a comparison device a first controlling switcher a controlled single channel thrcsholdcr and a second controlling switcher. It is enhanced operation efficiency and is automated exploitation of an anti hail protection network.

No. of Pages : 46 No. of Claims : 17

(12) PATENT APPLICATION PUBLICATION
(19) INDIA
(22) Date of filing of Application :17/05/2013
(21) Application No.1769/MUM/2013 A
(43) Publication Date : 08/05/2015

(54) Title of the invention : IDENTIFICATION OF INDIVIDUALS USING MULTIPLE SKELETON RECORDING DEVICES

(51) International classification	:G06K9/00, G06K9/62
(31) Priority Document No	:NA
(32) Priority Date	:NA
(33) Name of priority country	:NA
(86) International Application No	:NA
Filing Date	:NA
(87) International Publication No	: NA
(61) Patent of Addition to Application Number	:NA
Filing Date	:NA
(62) Divisional to Application Number	:NA
Filing Date	:NA

(71)**Name of Applicant :**
1)TATA CONSULTANCY SERVICES LIMITED
Address of Applicant :Nirmal Building, 9th Floor, Nariman Point, Mumbai, Maharashtra 400021 Maharashtra India
(72)**Name of Inventor :**
1)CHAKRAVARTY, Kingshuk
2)SINHA, Aniruddha
3)DAS, Diptesh
4)BANERJEE, Rohan
5)KONAR, Amit
6)DUTTA, Sudeepto

(57) Abstract :
Method(s) and system(s) for identification of an unknown person are disclosed. The method includes receiving skeleton data comprises data of multiple skeleton joints of the unknown person from skeleton recording devices. The method further includes extracting G gait feature vectors from the skeleton data. Further, the method includes classifying each gait feature vector into one of N classes based on a training dataset for N known persons and computing a classification score for each class. The method also includes clustering the training dataset into M clusters based on M predefined characteristic attributes of the known persons, tagging each gait feature vector with one of the M clusters based on a distance between a respective gait feature vector and cluster centers of M clusters, and determining a clustering score for each M cluster. The method further includes identifying the unknown person based on clustering scores and classification scores.

No. of Pages : 30 No. of Claims : 15

(12) PATENT APPLICATION PUBLICATION
(19) INDIA
(22) Date of filing of Application :19/03/2013
(21) Application No.835/MUM/2013 A
(43) Publication Date : 08/05/2015

(54) Title of the invention : A SYSTEM FOR DEVELOPING MODEL OF TEST-ENVIRONMENT FOR HARDWARE DESCRIPTION LANGUAGE/S THAT DESIGNS AND MODELS ELECTRONICS CIRCUITS AND A METHOD THEREOF

(51) International classification :G06F17/50
(31) Priority Document No :NA
(32) Priority Date :NA
(33) Name of priority country :NA
(86) International Application No :NA
Filing Date :NA
(87) International Publication No : NA
(61) Patent of Addition to Application Number :NA
Filing Date :NA
(62) Divisional to Application Number :NA
Filing Date :NA

(71)**Name of Applicant :**
1)AMOL BHARAT RANADIVE
Address of Applicant :3B2/11, NIRMAL PARK PADMAVATI, CHAVAN NAGAR, PUNE 411043, MAHARASHTRA, INDIA
(72)**Name of Inventor :**
1)AMOL BHARAT RANADIVE

(57) Abstract :
A system for developing model of test-environment for hardware description language/s that designs and models electronics circuits, serves substantial enhancement in reduction of development time, flexibility and reduction of errors for developing models in digital circuit that has relevance in processing of designing and testing of model used for integrated circuit(s). The system works on network computers or similar electronics machines where one can use for development of the test bench in VHDL or Verilog HDL with the help of said invention. The GUI enables intuitive method to select the predefined definitions of virtual test patterns generator models which in turn reduce the human errors substantially.

No. of Pages : 10 No. of Claims : 4

(12) PATENT APPLICATION PUBLICATION
(21) Application No.977/MUM/2013 A
(19) INDIA
(22) Date of filing of Application :22/03/2013
(43) Publication Date : 08/05/2015

(54) Title of the invention : SOCIAL NETWORKING THROUGH CURRENCY TRACKING

(51) International classification :G06Q40/00
(31) Priority Document No :NA
(32) Priority Date :NA
(33) Name of priority country :NA
(86) International Application No :NA
Filing Date :NA
(87) International Publication No : NA
(61) Patent of Addition to Application Number :NA
Filing Date :NA
(62) Divisional to Application Number :NA
Filing Date :NA

(71)**Name of Applicant :**
1)AMIT SHITOLE
Address of Applicant :C/65, ABHIMANSHREE HSG SOCIETY, BANER ROAD, PUNE - 411008, M.S., INDIA Maharashtra India
2)PRITAM HASABNIS
(72)**Name of Inventor :**
1)AMIT SHITOLE
2)PRITAM HASABNIS

(57) Abstract :
The present invention provides a system and method for social networking by tracking currency use on a portable electronic device. The system includes a communication terminal, an air interface, a web server and a database server/storage server. The method of the present invention involves tracking of the currency use by processing different types/modes of inputs from a user.

No. of Pages : 30 No. of Claims : 5

(12) PATENT APPLICATION PUBLICATION
(19) INDIA
(22) Date of filing of Application :22/03/2013
(21) Application No.979/MUM/2013 A
(43) Publication Date : 08/05/2015

(54) Title of the invention : MANOEUVERING MECHANISM FOR CIRCUIT BREAKERS

(51) International classification :H01H83/14
(31) Priority Document No :NA
(32) Priority Date :NA
(33) Name of priority country :NA
(86) International Application No :NA
Filing Date :NA
(87) International Publication No : NA
(61) Patent of Addition to Application Number :NA
Filing Date :NA
(62) Divisional to Application Number :NA
Filing Date :NA

(71)**Name of Applicant :**
1)LARSEN & TOUBRO LIMITED
Address of Applicant :LARSEN & TOUBRO LIMITED L&T HOUSE, BALLARD ESTATE, P. O. BOX: 278, MUMBAI 400 001, INDIA Maharashtra India
(72)**Name of Inventor :**
1)KAPU NAGARJUN
2)ARVINDKUMAR LOGANATHAN

(57) Abstract :
The present invention provides a manoeuvering mechanism for operating contact system of a circuit breakers. The manoeuvering mechanism having includes a latch link 2, a upper link 3, a lower link 4, a latch bracket 5, a double arm trip plate 6, a fork 7, a knob 8, a latch link pin 9, a spring pin 10, a upper link pin 11, trip plate pins 12, latch bracket pins 13, a spacer 14, biasing spring 15 and a drive pin 16. The latch link 2 is secured to a mounting plate 1 by a latch link pin 9. The upper link 3 is disposed on the latch link 2.. The biasing spring 15 is mounted on the trip plate pin 12 for retaining a double arm trip plate 6 to its original position and for lock the latch bracket when the mechanism is being reset after trip. Moreover, the mechanism is mounted on a contact system through mounting screws and the lower link 4 connected to the drive shaft with the drive pin 16 , therefore when the mechanism is maneuvered the circuit breaker will be able to carry current and break current there through.

No. of Pages : 23 No. of Claims : 3

(12) PATENT APPLICATION PUBLICATION
(21) Application No.951/MUM/2013 A
(19) INDIA
(22) Date of filing of Application :21/03/2013
(43) Publication Date : 08/05/2015

(54) Title of the invention : PANEL INTERLOCK ARRANGEMENT WITH AN ADD-ON OPERATING MECHANISM

(51) International classification	:H01H9/26, H01H9/20
(31) Priority Document No	:NA
(32) Priority Date	:NA
(33) Name of priority country	:NA
(86) International Application No	:NA
Filing Date	:NA
(87) International Publication No	: NA
(61) Patent of Addition to Application Number	:NA
Filing Date	:NA
(62) Divisional to Application Number	:NA
Filing Date	:NA

(71)**Name of Applicant :**
1)LARSEN & TOUBRO LTD.
Address of Applicant :L&T HOUSE, BALLARD ESTATE, MUMBAI-72, INDIA Maharashtra India
(72)**Name of Inventor :**
1)ANITYA VAIBHAV
2)SHUBHO SANYAL

(57) Abstract :
The operating handle is directly coupled with the Switching device / breaker irrespective of the door location. The door position sensor (11) is a component which serves the safety purpose of not allowing the switching device to switch on till the panel door is closed. The door position sensor (11) is hinged at a point with pin (16) such that its one end is positioned at the face of the mechanism on the rotary mechanism housing (7). The door sensor further has a bend 11(a) on its rear end. This bend comes in the path of the slider (9). Till the door is open, the door position sensor stays in the position as shown in the figure 4(a), the bend 11(a) does not allow the slider to move up. Thus, the operating handle (3) cannot be rotated as it locks the motion of the slider (9) and so the switching device cannot be switched ON thus ensuring one of the pre requisites of such mechanisms. The panel door (1) comes and sits on the facia of the mechanism at the rotary mechanism housing (1). As the panel door comes to rest it pushes the door position sensor (11) which falls back as it is hinged at the pin (16). In doing so the bend (11a) uncovers the slider such that there is no further obstruction in the path of the slider (9) and hence the motion can be easily transmitted from the operating handle to the slider and thus the switching device can be switched ON.

No. of Pages : 18 No. of Claims : 7

(12) PATENT APPLICATION PUBLICATION
(21) Application No.996/MUM/2013 A
(19) INDIA
(22) Date of filing of Application :22/03/2013
(43) Publication Date : 08/05/2015

(54) Title of the invention : IMPROVED MULTIFUNCTIONAL COIL ARRANGEMENT FOR CIRCUIT BREAKERS

(51) International classification	:H02H3/33	
(31) Priority Document No	:NA	
(32) Priority Date	:NA	
(33) Name of priority country	:NA	
(86) International Application No	:NA	
Filing Date	:NA	
(87) International Publication No	: NA	
(61) Patent of Addition to Application Number	:NA	
Filing Date	:NA	
(62) Divisional to Application Number	:NA	
Filing Date	:NA	

(71)**Name of Applicant :**
1)LARSEN & TOUBRO LIMITED
Address of Applicant :LARSEN & TOUBRO LIMITED L & T HOUSE, BALLARD ESTATE, MUMBAI 400 001, STATE OF MAHARASHTRA, INDIA
(72)**Name of Inventor :**
1)SHAIKH, USUFE
2)BISHNOI, BHANWAR, LAL
3)SUPEDA, PRAHLAD

(57) Abstract :
The present invention provides a multi-functional coil arrangement for circuit breakers to perform two tasks i.e. under voltage control coil and shunt coil. The multi-functional coil arrangement comprises: an under voltage (UV) circuit for providing an input under voltage (UV) control signal; a shunt (SHT) circuit for providing a shunt trip control signal; a coil for operating a plunger for tripping and closing the circuit breaker; a normally closed (NC)switch connected in series with the UV circuit and the coil for providing a control signal to the coil for tripping and closing of the circuit breaker.

No. of Pages : 13 No. of Claims : 12

(12) PATENT APPLICATION PUBLICATION
(19) INDIA
(22) Date of filing of Application :22/03/2013
(21) Application No.995/MUM/2013 A
(43) Publication Date : 08/05/2015

(54) Title of the invention : IMPROVED THERMAL MEMORY DETECTION ASSEMBLY

(51) International classification :G01J5/02
(31) Priority Document No :NA
(32) Priority Date :NA
(33) Name of priority country :NA
(86) International Application No :NA
Filing Date :NA
(87) International Publication No : NA
(61) Patent of Addition to Application Number :NA
Filing Date :NA
(62) Divisional to Application Number :NA
Filing Date :NA

(71)**Name of Applicant :**
1)LARSEN & TOUBRO LIMITED
Address of Applicant :LARSEN & TOUBRO LIMITED L & T HOUSE, BALLARD ESTATE, MUMBAI 400 001, STATE OF MAHARASHTRA, INDIA
(72)**Name of Inventor :**
1)SHAIKH, USUFE
2)BISHNOI, BHANWAR, LAL

(57) Abstract :
The present invention provides a thermal memory detection assembly for circuit breaker(s). the present invention provides RTD Sensors coupled with CT/Rogowski to sense temperature variation of individual pole and informing trip unit for overload protection. This is used for thermal memory detection once the breaker has tripped on fault and is being reclosed without providing the necessary cooling time. The present invention provides a precise temperature of individual poles could be measured and non linearly of capacitor is overcome

No. of Pages : 11 No. of Claims : 6

(12) PATENT APPLICATION PUBLICATION
(19) INDIA
(22) Date of filing of Application :01/08/2014
(21) Application No.1559/MUMNP/2014 A
(43) Publication Date : 08/05/2015

(54) Title of the invention : LIGHT EMITTING UNIT FOR A PROJECTOR LAMP

(51) International classification :F21S8/10,B60Q1/00
(31) Priority Document No :A50608/2012
(32) Priority Date :20/12/2012
(33) Name of priority country :Austria
(86) International Application No :PCT/AT2013/050205
Filing Date :22/10/2013
(87) International Publication No :WO 2014/094017
(61) Patent of Addition to Application Number :NA
Filing Date :NA
(62) Divisional to Application Number :NA
Filing Date :NA

(71)**Name of Applicant :**
1)ZIZALA LICHTSYSTEME GMBH
Address of Applicant :Scheibbser Strae 17 A 3250 Wieselburg Austria
(72)**Name of Inventor :**
1)GRTL Josef
2)PLANK Josef

(57) Abstract :
The invention relates to a light emitting unit (1) for a projector lamp in particular a motor vehicle headlamp comprising a plurality of light sources (2) a light guidance unit (3) comprising a plurality of light guides (30) and a downstream projection lens (4) wherein each light guide (30) has in each case one light exit surface (30a) and wherein each light source (2) couples light precisely into a light guide (30) assigned thereto and wherein adjacent light guides (30) are separated from one another by separating walls (31 32). The invention provides for at least one shield element (5) to be arranged between the light guide unit (3) and the projection lens (4) which shield element (5) has apertures (50) which are separated from one another by aperture separating walls (51 52) wherein the shield element (5) is arranged in such a way that in each case one aperture (50) is connected upstream of a light exit surface (30a) and wherein the apertures (50) correspond substantially in terms of shape and size to the light exit surfaces (30a) in each case assigned thereto and wherein on those surfaces (5a) of the at least one shield element (5) which are remote from the light guide unit (3) at least some of the aperture separating walls (51 52) have a smaller wall thickness (b) than those separating walls (31 32) of the light guide unit (3) which are assigned to the respective aperture separating walls (51 52).

No. of Pages : 22 No. of Claims : 19

(12) PATENT APPLICATION PUBLICATION
(19) INDIA
(22) Date of filing of Application :02/08/2014
(21) Application No.1560/MUMNP/2014 A
(43) Publication Date : 08/05/2015

(54) Title of the invention : CRYSTALLINE ANTIFUNGAL COMPOUNDS

(51) International classification :C07D239/90,A61P31/04
(31) Priority Document No :06380225.0
(32) Priority Date :07/08/2006
(33) Name of priority country :EPO
(86) International Application No :PCT/US2007/017476
Filing Date :06/08/2007
(87) International Publication No :WO/2008/021049
(61) Patent of Addition to Application Number :NA
Filing Date :NA
(62) Divisional to Application Number :482/MUMNP/2009
Filed on :06/03/2009

(71)**Name of Applicant :**
1)PALAU PHARMA, S.A.
Address of Applicant :Av. Cami Reial 51-57, E-08184 Palau-solita I Plegamans, Spain
(72)**Name of Inventor :**
1)PAREDES, Antonio, Canovas
2)ORPI, Javier, Bartroli
3)GRAU, Elies, Molins
4)SERRA, Anna, Roig
5)MEYER, Kevin
6)LORIMER, Keith

(57) Abstract :
Novel crystalline forms of (1R,2R)-7-chloro-3-[2-(2,4-difluorophenyl)-2-hydroxy-1-methyl-3-(1H-1,2,4-triazol-1-yl)propyl]quinazolin-4(3H)-one, pharmaceutical compositions containing these crystalline forms, methods of using these crystalline forms for treating and/or preventing various microbial and/or fungal infections or disorders, and processes for obtaining these crystalline forms. In particular, the present subject matter relates to the specific crystalline Forms I, II, III, IV, V, and VI of (1R, 2R)-7-chloro-3-[2-(2,4-difluorophenyl)-2-hydroxy-1-methyl-3-(1H-1,2,4-triazol-1-yl)propyl]quinazolin-4(3H)-one.

No. of Pages : 125 No. of Claims : 16

(12) PATENT APPLICATION PUBLICATION
(19) INDIA
(22) Date of filing of Application :22/03/2013
(21) Application No.990/MUM/2013 A
(43) Publication Date : 08/05/2015

(54) Title of the invention : AN IMPROVED AUXILIARY CONTACT FOR MINIATURE CIRCUIT BREAKER ASSEMBLY

(51) International classification	:H01H71/10
(31) Priority Document No	:NA
(32) Priority Date	:NA
(33) Name of priority country	:NA
(86) International Application No	:NA
Filing Date	:NA
(87) International Publication No	: NA
(61) Patent of Addition to Application Number	:NA
Filing Date	:NA
(62) Divisional to Application Number	:NA
Filing Date	:NA

(71)**Name of Applicant :**
1)LARSEN & TOUBRO LIMITED
Address of Applicant :L & T HOUSE, BALLARD ESTATE, MUMBAI 400 001, STATE OF MAHARASHTRA, INDIA
(72)**Name of Inventor :**
1)PATIL, PRANAV, D.
2)CHAUHAN, BITHI

(57) Abstract :
The present invention provides an improved auxiliary contact by addition of a protrusion on the knob for suitable and effective operation in synchronization with MCB and for ease of assembly of auxiliary contact. The miniature circuit breaker assembly with improved auxiliary contact comprises an auxiliary contact; and a miniature circuit breaker (MCB) unit comprises a miniature circuit breaker knob. The auxiliary contact comprises an auxiliary contact knob having a substantially elongated protrusion that fits in within a cavity of the MCB knob of the MCB unit.

No. of Pages : 11 No. of Claims : 2

(12) PATENT APPLICATION PUBLICATION
(19) INDIA
(22) Date of filing of Application :20/03/2013

(21) Application No.930/MUM/2013 A
(43) Publication Date : 08/05/2015

(54) Title of the invention : ENERGY GENERATION FROM PERPETUAL MOTION MACHINE USING MONOPOLE MAGNET

(51) International classification	:H02K53/00, F02B61/04
(31) Priority Document No	:NA
(32) Priority Date	:NA
(33) Name of priority country	:NA
(86) International Application No	:NA
Filing Date	:NA
(87) International Publication No	: NA
(61) Patent of Addition to Application Number	:NA
Filing Date	:NA
(62) Divisional to Application Number	:NA
Filing Date	:NA

(71)**Name of Applicant :**
1)Dr. Vasani Rupesh Parmanand
Address of Applicant :07, Aditraj Bunglows, Near Nandanvan-5, B/h Kalatirth Apartment, Prernatirth Derasar Road, Jodhpur, Ahmedabad-380015. Gujarat, India.
2)Shah Parin Kamalkumar
3)Jain Anjil Anvin
4)Bhavsar Swapnil Chandrakant
(72)**Name of Inventor :**
1)Dr. Vasani Rupesh Parmanand
2)Shah Parin Kamalkumar
3)Jain Anjil Anvin
4)Bhavsar Swapnil Chandrakant
5)Patel Bhupendra Laljibhai

(57) Abstract :
The present invention a copper ring are suspended on the nail then the monopole magnet is used to generate the power and the magnetic power is converted into the electrical energy and the battery is used to store the energy and the charged power is use to run the small device.

No. of Pages : 9 No. of Claims : 3

(12) PATENT APPLICATION PUBLICATION
(21) Application No.960/MUM/2013 A
(19) INDIA
(22) Date of filing of Application :21/03/2013
(43) Publication Date : 08/05/2015

(54) Title of the invention : SOLID STATE SWITCHING OF A DUAL COIL FOR OPERATING A UNIVERSAL ELECTRICAL SWITCHING DEVICE

(51) International classification	:G05B19/05	(71)**Name of Applicant :**
(31) Priority Document No	:NA	**1)LARSEN & TOUBRO LIMITED**
(32) Priority Date	:NA	Address of Applicant :LARSEN & TOUBRO LIMITED, L & T HOUSE, BALLARD ESTATE, MUMBAI 400001, STATE OF MAHARASHTRA, INDIA
(33) Name of priority country	:NA	
(86) International Application No	:NA	
Filing Date	:NA	(72)**Name of Inventor :**
(87) International Publication No	: NA	**1)SOM, SRIJAN**
(61) Patent of Addition to Application Number	:NA	**2)GURU, NRITYA**
Filing Date	:NA	
(62) Divisional to Application Number	:NA	
Filing Date	:NA	

(57) Abstract :
The present invention provides an arrangement for solid state switching of a dual coil for operating an electrical switching device. The arrangement comprises: a rectifier means for rectifying input alternating signal to provide a rectified signal; a filtering means for filtering the rectified signal; a converter means for converting the filtered signal into a mono stable signal; a deriver means for amplifying the mono stable signal;a timer means for determining the time duration for energizing a pick up coil(s) and a hold on coil(s). The arrangement further comprises a solid state switching device switches themono stable signal from the pick up coil (s) to the hold on coil(s) for a predetermined time duration for facilitating to continue a contact (s) of a contactor in closed condition for operating the electrical switching device.

No. of Pages : 13 No. of Claims : 13

(12) PATENT APPLICATION PUBLICATION
(21) Application No.998/MUM/2013 A
(19) INDIA
(22) Date of filing of Application :22/03/2013
(43) Publication Date : 08/05/2015

(54) Title of the invention : IMPROVED ZONE SELECTIVE INTERLOCKING ASSEMBLY AND METHOD THEREOF

(51) International classification	:G01R31/00, H02H3/00, H02H7/00
(31) Priority Document No	:NA
(32) Priority Date	:NA
(33) Name of priority country	:NA
(86) International Application No	:NA
Filing Date	:NA
(87) International Publication No	: NA
(61) Patent of Addition to Application Number	:NA
Filing Date	:NA
(62) Divisional to Application Number	:NA
Filing Date	:NA

(71)**Name of Applicant :**
1)LARSEN & TOUBRO LIMITED
Address of Applicant :L & T HOUSE, BALLARD ESTATE, MUMBAI 400 001, STATE OF MAHARASHTRA, INDIA
(72)**Name of Inventor :**
1)BISHNOI, BHANWAR, LAL
2)SHAIKH, USUFE

(57) Abstract :
The present invention provides a zone selective interlocking assembly for clearing fault(s) in circuit breaker (s) and method thereof. The zone selective interlocking assembly comprises: an upstream trip unit; a downstream trip unit. The upstream trip unit in co-ordination with the downstream trip unit having a zone selective interlocking (ZSI) trip signal with a failsafe sensitivity value for reducing the time to clear the fault in the circuit breaker, thereby enhancing the protection to the circuit breaker.

No. of Pages : 13 No. of Claims : 11

(12) PATENT APPLICATION PUBLICATION
(19) INDIA
(22) Date of filing of Application :22/03/2013

(21) Application No.999/MUM/2013 A
(43) Publication Date : 08/05/2015

(54) Title of the invention : IMPROVED RELAY EXPENDER UNIT FOR CIRCUIT BREAKERS

(51) International classification	:H01H71/24, G01R31/327
(31) Priority Document No	:NA
(32) Priority Date	:NA
(33) Name of priority country	:NA
(86) International Application No	:NA
Filing Date	:NA
(87) International Publication No	: NA
(61) Patent of Addition to Application Number	:NA
Filing Date	:NA
(62) Divisional to Application Number	:NA
Filing Date	:NA

(71)**Name of Applicant :**
1)LARSEN & TOUBRO LIMITED
Address of Applicant :L & T HOUSE, BALLARD ESTATE, MUMBAI 400 001, STATE OF MAHARASHTRA, INDIA
(72)**Name of Inventor :**
1)BISHNOI, BHANWAR, LAL
2)SUPEDA, PRAHLAD
3)SHAIKH, USUFE

(57) Abstract :
The present invention provides a relay expender assembly for circuit breaker. The relay expender assembly comprises: a controller means; an auxiliary and trip alarm contact (AUX and TAC) accessory (s); an input and output selection block. The controller means senses a trip signal(s) and the input/ output selection block connected to the controller means for selecting an output for the trip signal in said circuit breaker.

No. of Pages : 12 No. of Claims : 7

(12) PATENT APPLICATION PUBLICATION
(21) Application No.1811/MUM/2013 A
(19) INDIA
(22) Date of filing of Application :22/05/2013
(43) Publication Date : 08/05/2015

(54) Title of the invention : NOVEL COMPOUNDS SUITABLE FOR THE TREATMENT OF DYSLIPIDEMIA

(51) International classification	:C07D403/12, C07D417/12
(31) Priority Document No	:NA
(32) Priority Date	:NA
(33) Name of priority country	:NA
(86) International Application No	:NA
Filing Date	:NA
(87) International Publication No	: NA
(61) Patent of Addition to Application Number	:NA
Filing Date	:NA
(62) Divisional to Application Number	:NA
Filing Date	:NA

(71)**Name of Applicant :**
1)CADILA HEALTHCARE LIMITED
Address of Applicant :ZYDUS TOWER, SATELLITE CROSS ROAD, AHMEDABAD - 380 015, GUJARAT, INDIA
(72)**Name of Inventor :**
1)DESAI, RANJIT C.

(57) Abstract :
The present invention relates to compounds of the general formula (I), their tautomeric forms, their stereoisomers, their pharmaceutically acceptable salts, pharmaceutical compositions containing them, methods for their preparation, use of these compounds in medicine and the intermediates involved in their preparation. The compounds of the present invention can be used to treat diseases such as hyperlipidemia and also have a beneficial effect on cholesterol.

No. of Pages : 74 No. of Claims : 13

(12) PATENT APPLICATION PUBLICATION
(21) Application No.948/MUM/2013 A
(19) INDIA
(22) Date of filing of Application :21/03/2013
(43) Publication Date : 08/05/2015

(54) Title of the invention : INTEGRATED PANEL DOOR INTERLOCK MECHANISM FOR A ROTARY TYPE SWITCHING DEVICE.

(51) International classification	:H01H9/24, H01H9/20, H01H9/10
(31) Priority Document No	:NA
(32) Priority Date	:NA
(33) Name of priority country	:NA
(86) International Application No	:NA
Filing Date	:NA
(87) International Publication No	: NA
(61) Patent of Addition to Application Number	:NA
Filing Date	:NA
(62) Divisional to Application Number	:NA
Filing Date	:NA

(71)**Name of Applicant :**
1)LARSEN & TOUBRO LTD.
Address of Applicant :L&T HOUSE, BALLARD ESTATE, MUMBAI-72, INDIA Maharashtra India
(72)**Name of Inventor :**
1)ANITYA VAIBHAV
2)AMEYA M CHAUGHULE
3)SAMIR KUMAR

(57) Abstract :
An integrated panel door interlock mechanism for a rotary type switching device is provided, which complies with standard requirements including features of interlock, door defeat and auto-restoration. Further, the operating handle is directly coupled with the Switching device / breaker irrespective of the door location, as prescribed by the standard requirements. An interlock is provided on the operating handle ensuring that the panel door remains closed while the switching device is ON. Further, the interlock is made defeatable for intentional action. A mechanical means of sensing the position of the door is provided, which interlocks the operating mechanism in cases the door is open and releases the interlock once it senses the door close situation. The door interlocks while the breaker is in ON condition which would prevent the door from opening. Also there is provision of manual defeat; hence only a trained user can switch ON the circuit breaker when panel door is opened.

No. of Pages : 18 No. of Claims : 2

(12) PATENT APPLICATION PUBLICATION
(21) Application No.949/MUM/2013 A
(19) INDIA
(22) Date of filing of Application :21/03/2013
(43) Publication Date : 08/05/2015

(54) Title of the invention : STRUCTURALLY ENCHANCED KNOB WITH A PADLOCK..

(51) International classification :H01H19/14
(31) Priority Document No :NA
(32) Priority Date :NA
(33) Name of priority country :NA
(86) International Application No :NA
Filing Date :NA
(87) International Publication No : NA
(61) Patent of Addition to Application Number :NA
Filing Date :NA
(62) Divisional to Application Number :NA
Filing Date :NA

(71)**Name of Applicant :**
1)LARSEN & TOUBRO LTD.
Address of Applicant :L&T HOUSE, BALLARD ESTATE, MUMBAI-72, INDIA Maharashtra India
(72)**Name of Inventor :**
1)SHREEYASH PATANKAR
2)KAPU NAGARJUN

(57) Abstract :
The invention comprises of two structural members, an actuating member and a return spring. When the actuating member is displaced rotationally, it causes the prismatic structural member to egress the knob assembly and it can be used for constraining the knob motion. On loading, the actuating member, this is commonly the weakest part of the assembly fails in typical knobs. The present knob distributes all the loads to the structural members alone thus avoiding the breakage of weaker members.

No. of Pages : 21 No. of Claims : 3

(12) PATENT APPLICATION PUBLICATION
(19) INDIA
(22) Date of filing of Application :04/08/2014
(21) Application No.1568/MUMNP/2014 A
(43) Publication Date : 08/05/2015

(54) Title of the invention : FIXED DOSE COMBINATION THERAPY OF PARKINSON S DISEASE

(51) International classification :A61K31/137,A61K31/4045,A61K45/06
(31) Priority Document No :61/585824
(32) Priority Date :12/01/2012
(33) Name of priority country :U.S.A.
(86) International Application No :PCT/IL2013/050025
Filing Date :10/01/2013
(87) International Publication No :WO 2013/105092
(61) Patent of Addition to Application Number :NA
Filing Date :NA
(62) Divisional to Application Number :NA
Filing Date :NA

(71)**Name of Applicant :**
1)PHARMA TWO B LTD.
Address of Applicant :3 Pekeris Street Park Tamar 76702 Rehovot Israel
(72)**Name of Inventor :**
1)LIVNAH Nurit
2)LITMAN Pninit
3)ZAKSH Sarit

(57) Abstract :
A pharmaceutical composition for use in treatment of Parkinson s disease is provided comprising a pharmaceutically acceptable carrier and a fixed dose combination of pramipexole and rasagiline wherein the fixed dose combination contains a subtherapeutic dose of pramipexole and a subtherapeutic dose of rasagiline and the dose of pramipexole is lower than or equal to the dose of rasagiline.

No. of Pages : 32 No. of Claims : 13

(12) PATENT APPLICATION PUBLICATION
(19) INDIA
(22) Date of filing of Application :20/03/2013
(21) Application No.931/MUM/2013 A
(43) Publication Date : 08/05/2015

(54) Title of the invention : A MUD POWER BATTERY

(51) International classification	:H01M 2/10, E21B47/18
(31) Priority Document No	:NA
(32) Priority Date	:NA
(33) Name of priority country	:NA
(86) International Application No	:NA
Filing Date	:NA
(87) International Publication No	: NA
(61) Patent of Addition to Application Number	:NA
Filing Date	:NA
(62) Divisional to Application Number	:NA
Filing Date	:NA

(71)**Name of Applicant :**
1)Dr. Vasani Rupesh Parmanand
Address of Applicant :07, Aditraj Bunglows, Near Nandanvan-5, B/h Kalatirth Apartment, Prernatirth Derasar Road, Jodhpur, Ahmedabad-380015. Gujarat, India.
2)Shah Parin Kamalkumar
3)Jain Anjil Anvin
4)Bhavsar Swapnil Chandrakant
(72)**Name of Inventor :**
1)Dr. Vasani Rupesh Parmanand
2)Shah Parin Kamalkumar
3)Jain Anjil Anvin
4)Bhavsar Swapnil Chandrakant
5)Patel Bhupendra Laljibhai

(57) Abstract :
The present invention a mud is used as a electrolyte through a specially design cell the mud power battery gives chemical energy and electrodes converts mechanical energy to electrical energy and the electrical energy store into battery and the battery is attached to run device, and the battery gives electrical energy to run small device.

No. of Pages : 9 No. of Claims : 3

(12) PATENT APPLICATION PUBLICATION
(21) Application No.966/MUM/2013 A
(19) INDIA
(22) Date of filing of Application :21/03/2013
(43) Publication Date : 08/05/2015

(54) Title of the invention : AN IMPROVED MOVING CONTACT SHIELD CONSTRUCTION FOR DOUBLE BREAK CIRCUIT BREAKERS

(51) International classification :H01H73/00
(31) Priority Document No :NA
(32) Priority Date :NA
(33) Name of priority country :NA
(86) International Application No :NA
Filing Date :NA
(87) International Publication No : NA
(61) Patent of Addition to Application Number :NA
Filing Date :NA
(62) Divisional to Application Number :NA
Filing Date :NA

(71)**Name of Applicant :**
1)LARSEN & TOUBRO LIMITED
Address of Applicant :L & T HOUSE, BALLARD ESTATE, MUMBAI 400 001, STATE OF MAHARASHTRA, INDIA
(72)**Name of Inventor :**
1)NEENA, K. P.
2)BHANUSHALI, NIKUNJ

(57) Abstract :
The present invention provides an improved moving contact shield construction for double break circuit breakers. The moving contact assembly comprises a rotor comprises at least one moving contact for forming a rotary actuating arrangement; a moving contact shield for providing insulation to the moving contact; and a spring chamber for maintaining contact pressure in the assembly. The moving contact shield provides isolation to the moving contact from the arc and arcing product(s) during arching in the circuit breaker.

No. of Pages : 14 No. of Claims : 9

(12) PATENT APPLICATION PUBLICATION
(19) INDIA
(22) Date of filing of Application :27/05/2013

(21) Application No.1873/MUM/2013 A
(43) Publication Date : 08/05/2015

(54) Title of the invention : DEVICES AND METHODS FOR DETERMINATION OF COGNITIVE LOAD

(51) International classification :A61B5/00
(31) Priority Document No :NA
(32) Priority Date :NA
(33) Name of priority country :NA
(86) International Application No :NA
Filing Date :NA
(87) International Publication No : NA
(61) Patent of Addition to Application Number :NA
Filing Date :NA
(62) Divisional to Application Number :NA
Filing Date :NA

(71)**Name of Applicant :**
1)TATA CONSULTANCY SERVICES LIMITED
Address of Applicant :Nirmal Building, 9th Floor, Nariman Point, Mumbai, Maharashtra 400021 Maharashtra India
(72)**Name of Inventor :**
1)SINHARAY, Arijit
2)CHATTERJEE, Debatri
3)KONAR, Amit

(57) Abstract :
The present subject matter discloses device(s) and method(s) for determination of cognitive load on subjects. According to the present subject matter, the device(s) implement the described method(s), where the method(s) include, providing a logical task to a subject, where the logical task is based on at least one propositional statement, and is from predefined logical tasks of predefined complexity levels. Electroencephalography (EEG) signals are obtained from at least one brain lobe of the subject, while the subject is executing the logical task. A predefined set of EEG features are evaluated from the obtained EEG signals and the cognitive load of the subject is classified based on the predefined set of EEF features.

No. of Pages : 35 No. of Claims : 17

(12) PATENT APPLICATION PUBLICATION
(19) INDIA
(22) Date of filing of Application :22/03/2013
(21) Application No.982/MUM/2013 A
(43) Publication Date : 08/05/2015

(54) Title of the invention : SENSING SYSTEM FOR ELECTRICAL COMPONENTS OF MOULDED CASE CIRCUIT BREAKER

(51) International classification	:H01H9/34	
(31) Priority Document No	:NA	
(32) Priority Date	:NA	
(33) Name of priority country	:NA	
(86) International Application No	:NA	
Filing Date	:NA	
(87) International Publication No	: NA	
(61) Patent of Addition to Application Number	:NA	
Filing Date	:NA	
(62) Divisional to Application Number	:NA	
Filing Date	:NA	

(71)**Name of Applicant :**
1)LARSEN & TOUBRO LIMITED
Address of Applicant :LARSEN & TOUBRO LIMITED L & T HOUSE, BALLARD ESTATE, P. O. BOX: 278, MUMBAI 400 001, INDIA Maharashtra India
(72)**Name of Inventor :**
1)BHANWAR LAL BISHNOI
2)CAUSHALYA SAKADEVAN

(57) Abstract :
Disclosed is a moulded case circuit breaker comprising a trip unit, a printed circuit board (PCB) integrating signal conditioning circuits, a processing circuits, a trip unit circuitry and Rogowski coil aligned on a printed circuit board (PCB), wherein the Rogowski coil makes use of flux lines by reducing inductance effect of toroidal tracks.

No. of Pages : 8 No. of Claims : 3

(12) PATENT APPLICATION PUBLICATION
(21) Application No.983/MUM/2013 A
(19) INDIA
(22) Date of filing of Application :22/03/2013
(43) Publication Date : 08/05/2015

(54) Title of the invention : A MECHANISM FOR AUXILIARY INDICATION, BELL ALARM ACTUATION AND ACCESSORY ADAPTATION FOR AN ELECTRICAL SWITCHING DEVICE

(51) International classification :H01H71/46
(31) Priority Document No :NA
(32) Priority Date :NA
(33) Name of priority country :NA
(86) International Application No :NA
Filing Date :NA
(87) International Publication No : NA
(61) Patent of Addition to Application Number :NA
Filing Date :NA
(62) Divisional to Application Number :NA
Filing Date :NA

(71)**Name of Applicant :**
1)LARSEN & TOUBRO LIMITED
Address of Applicant :LARSEN & TOUBRO LIMITED L & T HOUSE, BALLARD ESTATE, P. O. BOX: 278, MUMBAI 400 001, INDIA Maharashtra India
(72)**Name of Inventor :**
1)DIXON MALCOLM CORREA
2)ONKAR V. KULKARNI

(57) Abstract :
The present invention provides a kinematics mechanism for circuit electrical switching device for operating auxiliary indication, bell alarm actuation and accessory adaptation. The device having a knob for operating the electrical switching device in ON and OFF position manually. The kinematics mechanism having a first mechanism and second mechanism. The first mechanism has a U pin, a small latch, a contact holder, a big latch, a main spring, a sliding bridge, a selector switch and a rest bar. The big latch can be rotates independently irrespective of the contact holder and is retained in respective position by a retaining spring. The sliding bridge enabling a flexible to make or break with the fixed contact thereby achieving auxiliary indication. The selector switch for operating the device in ON and OFF position, rotation of the selector switch latches a TAC latch with the sliding bridge by the force exerted on a TAC latch spring thereby providing constant indication of the status of the device. The rest bar with a rest bar spring on operating manually slides the sliding bridge to ON position. The second mechanism having a external tripper link, a external tripper link spring and a connector pin. The connector pin secured to the external tripper link and the trip link, upon operating the trip link, the connector pin and the external tripper link moves to rotate the big latch of the first mechanism to provide external tripping.

No. of Pages : 21 No. of Claims : 1

(12) PATENT APPLICATION PUBLICATION
(21) Application No.984/MUM/2013 A
(19) INDIA
(22) Date of filing of Application :22/03/2013
(43) Publication Date : 08/05/2015

(54) Title of the invention : OPERATING MECHANISM FOR CIRCUIT BREAKERS WITH SINGLE AXIS ASSEMBLY

(51) International classification	:H01H83/14	(71)**Name of Applicant :**
(31) Priority Document No	:NA	**1)LARSEN & TOUBRO LIMITED**
(32) Priority Date	:NA	Address of Applicant :LARSEN & TOUBRO LIMITED L&T HOUSE, BALLARD ESTATE, P. O. BOX: 278, MUMBAI 400 001, INDIA Maharashtra India
(33) Name of priority country	:NA	
(86) International Application No	:NA	
Filing Date	:NA	(72)**Name of Inventor :**
(87) International Publication No	: NA	**1)HERAMB BARWEKAR**
(61) Patent of Addition to Application Number	:NA	
Filing Date	:NA	
(62) Divisional to Application Number	:NA	
Filing Date	:NA	

(57) Abstract :
Disclosed is an operating mechanism for circuit breakers. The operating mechanism comprises a housing supporting a pivot pin in inbuilt bearing, a mechanism pivot pin pinned in the bearing, a manual input link pivoted in housing having constrained and angular displacement, a support mounted on the mechanism pivot pin with a mechanism spring, a small latch mounted on the support, a trip latch forming a mechanical link along with the plastic support, and the small latch, the trip latch mounted on the mechanism pivot for breaking the mechanism link in case of fault condition, a connector link connecting the manual input link with a toggle joint and the small latch, a flexible link providing flexible connection between the support and the moving contact to form a flexible joint therebetween.

No. of Pages : 16 No. of Claims : 4

(12) PATENT APPLICATION PUBLICATION
(21) Application No.944/MUM/2013 A
(19) INDIA
(22) Date of filing of Application :21/03/2013
(43) Publication Date : 08/05/2015

(54) Title of the invention : GROUP MESSAGE RELAY

(51) International classification	:H04B7/15	(71)**Name of Applicant :**
(31) Priority Document No	:NA	**1)BHAVIN TURAKHIA**
(32) Priority Date	:NA	Address of Applicant :DIRECTIPLEX, OLD NAGARDAS ROAD, NEAR ANDHERI SUBWAY, ANDHERI (EAST), MUMBAI 69 Maharashtra India
(33) Name of priority country	:NA	
(86) International Application No	:NA	
Filing Date	:NA	(72)**Name of Inventor :**
(87) International Publication No	: NA	**1)BHAVIN TURAKHIA**
(61) Patent of Addition to Application Number	:NA	
Filing Date	:NA	
(62) Divisional to Application Number	:NA	
Filing Date	:NA	

(57) Abstract :
A message machine may provide a message service that allows creation of a chat group in which multiple users are members. A member of the chat group may send a message to the chat group, which causes the message machine to send the message to each of the other members who are online in the message service. If one of the other members is offline in the message service, but is online in another message service, the message machine may relay the message to this member via the other message service, in which an online member of the chat group is socially connected to the offline member by the other message service. The message machine may access credentials of the online member, use these credentials to impersonate the online member, and send the message to the offline member through the other message service.

No. of Pages : 33 No. of Claims : 22

(12) PATENT APPLICATION PUBLICATION
(19) INDIA
(22) Date of filing of Application :22/03/2013
(21) Application No.987/MUM/2013 A
(43) Publication Date : 08/05/2015

(54) Title of the invention : A COMMON RAIL SHIFT SYSTEM FOR AN AUTOMOTIVE TRANSMISSION

(51) International classification :F02D41/38
(31) Priority Document No :NA
(32) Priority Date :NA
(33) Name of priority country :NA
(86) International Application No :NA
Filing Date :NA
(87) International Publication No : NA
(61) Patent of Addition to Application Number :NA
Filing Date :NA
(62) Divisional to Application Number :NA
Filing Date :NA

(71)**Name of Applicant :**
1)TATA MOTORS LIMITED
Address of Applicant :Bombay House, 24 Homi Mody Street, Hutatma Chowk, Mumbai 400 001, Maharashtra, India
(72)**Name of Inventor :**
1)SAMSON R.

(57) Abstract :
The present disclosure provides common rail shift system for an automotive transmission. The system comprises a shift rail with plurality of shifter forks configured to move axially on the shift rail, and a shifter dog is provided on each of the plurality of shifter forks. A selector shifter shaft having a plurality of shifter drums is disposed parallel to the shift rail. Each of the plurality of shifter drums of the selector shifter shaft comprises at least one predetermined shaped first pattern capable of accommodating the shifter dog. The first pattern are configured such that, at one rotational position of the shifter shaft the shifter dog provided on one of the plurality of shifter forks is not aligned in axial slot of corresponding first pattern of one of the plurality of shifter drums, and other shifter dogs are aligned in the axial slots of corresponding first patterns of other drums.

No. of Pages : 28 No. of Claims : 11

(12) PATENT APPLICATION PUBLICATION
(19) INDIA
(22) Date of filing of Application :22/03/2013
(21) Application No.988/MUM/2013 A
(43) Publication Date : 08/05/2015

(54) Title of the invention : A MECHANICAL SYSTEM FOR MULTI LEVEL FARMING

(51) International classification :F03D7/04
(31) Priority Document No :NA
(32) Priority Date :NA
(33) Name of priority country :NA
(86) International Application No :NA
Filing Date :NA
(87) International Publication No : NA
(61) Patent of Addition to Application Number :NA
Filing Date :NA
(62) Divisional to Application Number :NA
Filing Date :NA

(71)**Name of Applicant :**
1)INDIAN INSTITUTE OF TECHNOLOGY (IIT), BOMBAY
Address of Applicant :INDIAN INSTITUTE OF TECHNOLOGY (IIT), BOMBAY, POWAI, MUMBAI-400076 Maharashtra India
(72)**Name of Inventor :**
1)KSHITIJ SHANTARAM THAVARE

(57) Abstract :
The working of the mechanical system is based on the principle of a parallelogram four bar mechanism; a stack of platforms is developed on which farming is carried out. Between each platform thus exists a four bar mechanism. The system is basically based on the concept of developing farms in the vertical direction rather than expanding the farmland in horizontal direction. The mechanism is such that the farmer/operator does not need to climb up the platforms to perform the farming operations, but instead the platforms can be brought down at ground level for the farmer to complete the operations and then can be sent back to their original vertical positions. Stacking the platforms helps in almost doubling the cultivation using the base land and the platforms.

No. of Pages : 28 No. of Claims : 7

(12) PATENT APPLICATION PUBLICATION
(21) Application No.963/MUM/2013 A
(19) INDIA
(22) Date of filing of Application :21/03/2013
(43) Publication Date : 08/05/2015

(54) Title of the invention : A MECHANICAL SYSTEM FOR PROVIDING THE INTEGRATION OF SIDE ADD-ON AUXILILARY BLOCK WITH THE SWITCHING DEVICE ESPECIALLY CONTACTORS

(51) International classification :H01H50/54
(31) Priority Document No :NA
(32) Priority Date :NA
(33) Name of priority country :NA
(86) International Application No :NA
Filing Date :NA
(87) International Publication No : NA
(61) Patent of Addition to Application Number :NA
Filing Date :NA
(62) Divisional to Application Number :NA
Filing Date :NA

(71)**Name of Applicant :**
1)LARSEN & TOUBRO LIMITED
Address of Applicant :L & T HOUSE, BALLARD ESTATE, MUMBAI 400 001, STATE OF MAHARASHTRA, INDIA
(72)**Name of Inventor :**
1)SARASWAT, ANVITA, A.

(57) Abstract :
The present invention provides a system for integration of side add-on auxiliary block with the switching device. The system comprises an actuating mechanism comprises a moving magnet (Al) with a moving magnet holder (A5), a fixed magnet (A2), a spring system (A4) and a connector assembly (A6) connected to a side add-on auxiliary block. The moving magnet (Al) is moved horizontally with the moving magnet holder (A5) of said actuating system provides a corresponding vertical movement to said connector assembly.

No. of Pages : 14 No. of Claims : 9

(12) PATENT APPLICATION PUBLICATION
(21) Application No.964/MUM/2013 A
(19) INDIA
(22) Date of filing of Application :21/03/2013
(43) Publication Date : 08/05/2015

(54) Title of the invention : A METHOD OF DETERMINING RESIDUAL LIFE OF AN ELECTRICAL SWITCHING DEVICE

(51) International classification :H01H1/00
(31) Priority Document No :NA
(32) Priority Date :NA
(33) Name of priority country :NA
(86) International Application No :NA
Filing Date :NA
(87) International Publication No : NA
(61) Patent of Addition to Application Number :NA
Filing Date :NA
(62) Divisional to Application Number :NA
Filing Date :NA

(71)**Name of Applicant :**
1)LARSEN & TOUBRO LIMITED
Address of Applicant :L & T HOUSE, BALLARD ESTATE, MUMBAI 400 001, STATE OF MAHARASHTRA, INDIA
(72)**Name of Inventor :**
1)SOM, SRIJAN, GOUTAM
2)MUTHU, REVATHY, A.

(57) Abstract :
The present invention provides a method for determining remaining life of an electrical switching device. In the present invention the residual life calculation is done by considering a single input from the coil freewheeling circuit. The present invention reduces the sensors requirement as well as the computation time. The present method prevents the ambiguous indication of the life at the set life band margins, therefore prevent erroneous life calculation. The present invention provides an improved method for calculating the moving average life of the previous few operations by storing in a non volatile memory of a micro-controller and providing a reliable & robust residual life indication.

No. of Pages : 14 No. of Claims : 10

(12) PATENT APPLICATION PUBLICATION
(19) INDIA
(22) Date of filing of Application :20/03/2013
(21) Application No.935/MUM/2013 A
(43) Publication Date : 08/05/2015

(54) Title of the invention : A CAR POWER BATTERY CHARGER

(51) International classification :H02J7/00
(31) Priority Document No :NA
(32) Priority Date :NA
(33) Name of priority country :NA
(86) International Application No :NA
Filing Date :NA
(87) International Publication No : NA
(61) Patent of Addition to Application Number :NA
Filing Date :NA
(62) Divisional to Application Number :NA
Filing Date :NA

(71)**Name of Applicant :**
1)Dr. Vasani Rupesh Parmanand
Address of Applicant :07, Aditraj Bunglows, Near Nandanvan-5, B/h Kalatirth Apartment, Prernatirth Derasar Road, Jodhpur, Ahmedabad-380015. Gujarat, India.
2)Shah Parin Kamalkumar
3)Jain Anjil Anvin
4)Bhavsar Swapnil Chandrakant
(72)**Name of Inventor :**
1)Dr. Vasani Rupesh Parmanand
2)Shah Parin Kamalkumar
3)Jain Anjil Anvin
4)Bhavsar Swapnil Chandrakant
5)Patel Bhupendra Laljibhai

(57) Abstract :
The present invention a vehicle passing is through a speed and the generator attached with the front wheel gives mechanical energy and generator converts mechanical energy to electrical energy and the electrical energy store into battery and the battery is attached to controller, and the controller gives electrical energy to the motor to give drive to the car.

No. of Pages : 9 No. of Claims : 3

(12) PATENT APPLICATION PUBLICATION
(21) Application No.962/MUM/2013 A
(19) INDIA
(22) Date of filing of Application :21/03/2013
(43) Publication Date : 08/05/2015

(54) Title of the invention : A STRUCTURE - ADD-ON-CHAMBER (AOC) IN SWITCHBOARDS

(51) International classification	:H02B1/01	
(31) Priority Document No	:NA	
(32) Priority Date	:NA	
(33) Name of priority country	:NA	
(86) International Application No	:NA	
Filing Date	:NA	
(87) International Publication No	: NA	
(61) Patent of Addition to Application Number	:NA	
Filing Date	:NA	
(62) Divisional to Application Number	:NA	
Filing Date	:NA	

(71)**Name of Applicant :**
1)LARSEN & TOUBRO LIMITED
Address of Applicant :LARSEN & TOUBRO LIMITED, L & T HOUSE, BALLARD ESTATE, MUMBAI 400 001, STATE OF MAHARASHTRA, INDIA
(72)**Name of Inventor :**
1)PATIL, VILAS, D.
2)JAGADEESH, ARUN

(57) Abstract :
The present invention provides an assembly of an add-on-chamber (AOC) in switchboard(s).The assembly provides a simple, flat pack assembly and has very less number of components. The assembly comprises: a top frame and bottom frame for providing base and rigidity to the assembly; a side cover(s) with four flange(s) for accommodating the top and bottom frame on both side of the assembly; a cable clamp bracket fixed on the side cover(s) for mounting a link supporting channel(s) and cable(s); a supporting channel fixed to the side cover(s) on both sides; a top plate mounted on the top frame for ingress protection to the assembly; a bottom plate mounted on the bottom frame having two flanges on both sides for supporting the side cover(s).

No. of Pages : 17 No. of Claims : 8

(12) PATENT APPLICATION PUBLICATION
(21) Application No.992/MUM/2013 A
(19) INDIA
(22) Date of filing of Application :22/03/2013
(43) Publication Date : 08/05/2015

(54) Title of the invention : IMPROVED SLIDING LATCH ARRANGEMENT WITH PAD LOCK AND KEY LOCKING PROVISION

(51) International classification	:E05B67/22
(31) Priority Document No	:NA
(32) Priority Date	:NA
(33) Name of priority country	:NA
(86) International Application No	:NA
Filing Date	:NA
(87) International Publication No	: NA
(61) Patent of Addition to Application Number	:NA
Filing Date	:NA
(62) Divisional to Application Number	:NA
Filing Date	:NA

(71)**Name of Applicant :**
1)LARSEN & TOUBRO LIMITED
Address of Applicant :L & T HOUSE, BALLARD ESTATE, MUMBAI 400 001, STATE OF MAHARASHTRA, INDIA
(72)**Name of Inventor :**
1)JETHLIYA, RAJESH
2)CHOUDHARI, SADANAND, G.

(57) Abstract :
The present invention provides a sliding latch locking assembly for sheet metal enclosure. The sliding latch locking assembly comprises: a latch housing (1) comprising two click fit flexible locking profiles (9) and a center rigid member (8); a latch slider (2) comprising a tip (7) for the locking said latch assembly with the door frame; a latch slider stopper (3) with a click fit retainer (11) adapted to show lock and unlock condition of said latch; a spring (4) for maintaining the desired position of said latch slider. The latch housing (1) comprising two holes (6) for receiving a padlock pin(s) for proving padlocking facility in the assembly. The latch housing (1) having provision to facilitate key locking in said assembly.

No. of Pages : 19 No. of Claims : 8

(12) PATENT APPLICATION PUBLICATION
(21) Application No.1574/MUMNP/2014 A
(19) INDIA
(22) Date of filing of Application :05/08/2014
(43) Publication Date : 08/05/2015

(54) Title of the invention : METHOD FOR CONTROLLING THE FUEL SUPPLY TO BURNERS OF A BURNER GROUP AND BURNER CONTROLLER

(51) International classification :F23N1/00,C22B1/24,C22B1/20
(31) Priority Document No :10 2012 002 784.2
(32) Priority Date :15/02/2012
(33) Name of priority country :Germany
(86) International Application No :PCT/EP2013/052966
Filing Date :14/02/2013
(87) International Publication No :WO 2013/120949
(61) Patent of Addition to Application Number :NA
Filing Date :NA
(62) Divisional to Application Number :NA
Filing Date :NA

(71)**Name of Applicant :**
1)OUTOTEC (FINLAND) OY
Address of Applicant :Puolikkotie 10 FI 02230 Espoo Finland
(72)**Name of Inventor :**
1)SEMILLER Karl
2)SELT Wolfgang
3)STR–DER Michael

(57) Abstract :
A method for controlling the fuel supply to several burners (2) of a burner group (1) and a corresponding burner controller are described. In the method the temperature (TY) in the burner group (1) is determined as control variable and in dependence on the control deviation of the temperature (TY) determined for the burner group (1) to a specified setpoint temperature (TSP) the fuel supply to the several burners (2) of the burner group (1) is specified as correcting variable. It is provided that the controller is formed as temperature to flow cascade controller with a temperature master controller (8) for all burners (2) of the burner group (1) and a plurality of fuel supply slave controllers (10) for one burner (2) each or one burner subgroup each wherein the temperature master controller (8) specifies a common mean fuel supply (XAVG) for each of the burners (2) of the burner group (1) and each fuel supply slave controller (10) uses at least one disturbance variable (TT TYL/R) associated to the burner (2) and/or the burner subgroup in order to take account of a correction of the fuel supply (X) to the burner or the burner subgroup.

No. of Pages : 20 No. of Claims : 10

(12) PATENT APPLICATION PUBLICATION
(19) INDIA
(22) Date of filing of Application :05/08/2014
(21) Application No.1575/MUMNP/2014 A
(43) Publication Date : 08/05/2015

(54) Title of the invention : 2 AMINO 6 PHENYL SUBSTITUTED PYRIDO [2 3 D] PYRIMIDINE DERIVATIVES USEFUL AS RAF KINASE INHIBITORS

(51) International classification :C07D471/04,C07D471/12,A61K31/519
(31) Priority Document No :61/607702
(32) Priority Date :07/03/2012
(33) Name of priority country :U.S.A.
(86) International Application No :PCT/US2013/029084
Filing Date :05/03/2013
(87) International Publication No :WO 2013/134243
(61) Patent of Addition to Application Number :NA
Filing Date :NA
(62) Divisional to Application Number :NA
Filing Date :NA

(71)**Name of Applicant :**
1)ELI LILLY AND COMPANY
Address of Applicant :Lilly Corporate Center Indianapolis Indiana 46285 U.S.A
2)DECIPHERA PHARMACEUTICALS LLC
(72)**Name of Inventor :**
1)ALLGEIER Matthew Carl
2)FLYNN Daniel L.
3)KAUFMAN Michael D.
4)PATEL Phenil J.
5)WOLFANGEL Craig D.

(57) Abstract :
The present invention provides the compound l (3 3 Dimethylbutyl) 3 (2 fluoro 4 methyl 5 (7 methyl 2 (methylamino)pyrido[2 3 d]pyrimidin 6 yl)phenyl)urea or a pharmaceutically acceptable salt thereof that inhibits Raf and therefore may be useful in treating cancer.

No. of Pages : 59 No. of Claims : 16

(12) PATENT APPLICATION PUBLICATION
(19) INDIA
(22) Date of filing of Application :06/05/2013
(21) Application No.1635/MUM/2013 A
(43) Publication Date : 08/05/2015

(54) Title of the invention : INVENTION OF CHLOROPHYTUM BORIVILIANUM DERIVED PRODUCT HAVING DISTINCT PROPERTIES WITH RESPECT TO ENHANCEMENT OF SPERMATOGENESIS PROCESS.

(51) International classification	:A61k36/00, C12Q1/05
(31) Priority Document No	:NA
(32) Priority Date	:NA
(33) Name of priority country	:NA
(86) International Application No	:NA
Filing Date	:NA
(87) International Publication No	: NA
(61) Patent of Addition to Application Number	:NA
Filing Date	:NA
(62) Divisional to Application Number	:NA
Filing Date	:NA

(71)**Name of Applicant :**
1)MATEY HARPREET KAUR
Address of Applicant :SR. NO. 30/4, SUMAN PARADISE, A-WING, FLAT NO.-3, NEAR ZEAL COLLEGE NARHE, PUNE-411041, MAHARASHTRA, INDIA
2)BALLAL RENUKA BHARAT
3)BHAT ANKUSH JEE
4)HULAWALE SAGAR ANANTA
5)BALLAL BHARAT BAJARANG
(72)**Name of Inventor :**
1)BHAT ANKUSH JEE
2)BALLAL RENUKA BHARAT
3)HULAWALE SAGAR ANANTA
4)MATEY HARPREET KAUR
5)BALLAL BHARAT BAJARANG

(57) Abstract :
Present invention belongs to biotechnology field and keeps industrial applications. Sperms are the reservoir of human genome information. Competition, overexploitation of electronic appliances, use of computers, devices having electromagnetic radiations, stress-levei & pollution has been documented for decline in sperm count. Every year male sperm count fall by 2%. At this rate there would be no fertile men left in the next 40-50 years. This is the outcome of intense research performed with the approval of Institutional Animal Ethics Committee. Invented product is a distinct product which is characterized by new properties which were not described in prior art. Using unique procedure and modern biotechnology tools, the novel product is derived from Chlorophytum borivilianum. The product is useful for minimizing infertility problems by increasing sperm counts. On the background of annual fall in the average sperm count, the invention is vital for existence of human race.

No. of Pages : 15 No. of Claims : 4

(12) PATENT APPLICATION PUBLICATION
(19) INDIA
(22) Date of filing of Application :28/12/2012

(21) Application No.3677/MUM/2012 A
(43) Publication Date : 08/05/2015

(54) Title of the invention : JAL-ADHARIT STHAGAN SANGHATAK

(51) International classification	:A01N43/50, A01N25/22
(31) Priority Document No	:NA
(32) Priority Date	:NA
(33) Name of priority country	:NA
(86) International Application No	:NA
Filing Date	:NA
(87) International Publication No	: NA
(61) Patent of Addition to Application Number	:NA
Filing Date	:NA
(62) Divisional to Application Number	:NA
Filing Date	:NA

(71)**Name of Applicant :**
1)ISIHARA SANGYO KAISA, LIMITED
Address of Applicant :3-15, EDOBORI 1-KOM, NISHI-KU, OSAKA-SI, OSAKA 550-0002, JAPAN Japan
(72)**Name of Inventor :**
1)TAKESI SINDO

(57) Abstract :
समस्या यह थी की जब किसी स्प्रे घोल (छिड़काव हेतु घोल) को क्रशी-रसायन के प्रभाव को बढ़ाने के उदेश्य से एक ओरगानोसिलिकॉ-आधारित तलसक्रियकारक (surfactant) के साथ मिलाकर बनाया जाता है, तब बड़ी मात्रा मे झाग बनता है, और इसलिए स्प्रे घोल की मात्रा को सही तरह से मापना कठिन हो जाता है, साथ ही स्प्रे घोल स्प्रेयर (छिड़काव यंत्रा) से बाहर बह जाता है, इत्यादि. विशेष रूप से, जब स्प्रे घोल का निर्माण और रसायन का छिड़काव बार बार किया जाता है, तब झाग की मात्रा लगातार बढ़ती जाती है, और इसलिए, स्प्रे घोल को तैयार करना और भी कठिन हो जाता है. जब किसी स्प्रे घोल, जिसे एक जल-आधारित स्थगन (suspension संघटक प्रदान करके, जिसमे (क) सायाज़ोफ़ामीड (cyazofamid), (ख) एक polydimethylsiloxane -युक्त झाग-प्रतिरोधक एजेंट, (ग) एक छइतरने वाला घटक (dispersant), (घ) एक तिरणरोधक एजेंट (antisettling), (ई) एक जमावरोधी एजेंट (antifreezing), (च) एक रोगणुरोधक एजेंट, और (छ) पानी, का समावेश है, को एक ओरगानोसिलिकॉआन (organoslicone)-आधारित तलसक्रियकारक को मिलाकर बनाया जाता है, तब झाग का बनना अवरोधित होता है, और इस प्रकार स्प्रे घोल को बनाना सुगम होता है.

No. of Pages : 11 No. of Claims : 2

(12) PATENT APPLICATION PUBLICATION
(21) Application No.1447/CHENP/2014 A
(19) INDIA
(22) Date of filing of Application :24/02/2014
(43) Publication Date : 08/05/2015

(54) Title of the invention : DESALINATION SYSTEM AND DESALINATION METHOD

(51) International classification :C02F1/44,B01D61/02,B01D61/10
(31) Priority Document No :2011184668
(32) Priority Date :26/08/2011
(33) Name of priority country :Japan
(86) International Application No :PCT/JP2012/070796
Filing Date :16/08/2012
(87) International Publication No :WO 2013/031545
(61) Patent of Addition to Application Number :NA
Filing Date :NA
(62) Divisional to Application Number :NA
Filing Date :NA

(71)**Name of Applicant :**
1)HITACHI LTD.
Address of Applicant :6 6 Marunouchi 1 chome Chiyoda ku Tokyo 1008280 Japan
(72)**Name of Inventor :**
1)SEKINE Yasunori
2)NOTO Kazuhiko
3)SASAKI Akira
4)KITAMURA Kotaro

(57) Abstract :
This desalination system (S) desalinates waste water and seawater and comprises the following: a purification device (1) that allows waste water to pass therethrough and purifies the same; a first reverse osmosis membrane (2) that allows passed water (s5a) that was passed through the purification device (1) to pass causes the salt content of the passed water to be contained in and removed through first condensed water (s6a) and that generates industrial use water (s1); a first pre treatment device (3) in which the first condensed water (s6a) is subjected to any one pre treatment from between at least condensed filtration and nanofiltration membrane filtration; and a second reverse osmosis membrane (4) that passes first treated water (s7a) which was subjected to pre treatment by the first pre treatment device (3) that causes the salt content of the passed water to be contained in and removed through condensed water (s6b) and that generates industrial use water (s2).

No. of Pages : 41 No. of Claims : 10

(12) PATENT APPLICATION PUBLICATION
(21) Application No.1588/CHENP/2014 A
(19) INDIA
(22) Date of filing of Application :27/02/2014
(43) Publication Date : 08/05/2015

(54) Title of the invention : NOVEL COMPOUND HAVING XANTHENE DERIVATIVE MULTIMERIC STRUCTURE COLORED COMPOSITION INK FOR INKJET RECORDING INKJET RECORDING METHOD COLOR FILTER AND COLOR TONER

(51) International classification :C09B11/28,B41J2/01,B41M5/00
(31) Priority Document No :2011188044
(32) Priority Date :30/08/2011
(33) Name of priority country :Japan
(86) International Application No :PCT/JP2012/071852
Filing Date :29/08/2012
(87) International Publication No :WO 2013/031838
(61) Patent of Addition to Application Number :NA
Filing Date :NA
(62) Divisional to Application Number :NA
Filing Date :NA

(71)**Name of Applicant :**
1)FUJIFILM Corporation
Address of Applicant :26 30 Nishiazabu 2 chome Minato ku Tokyo 1060031 Japan
(72)**Name of Inventor :**
1)FUJIE Yoshihiko
2)TATEISHI Keiichi
3)FOSTER Clive Edwin

(57) Abstract :
The purpose of the present invention is to provide a novel compound having a specific xanthene derivative multimeric structure and that provides a printed item having greater ozone resistance light resistance and other image durability characteristics than conventional printed items. The compound is indicated by general formula (1). (In general formula (1) L indicates a divalent to tetravalent linking group. D indicates a residue having 1 5 hydrogen atoms removed from a compound indicated by general formula (2). m indicates an integer between 1 and 10. However the plurality of L can each be the same or different. n indicates an integer between 2 and 10. However the plurality of D can each be the same or different. In general formula (2) R R each independently indicate a hydrogen atom or a substituent group but same have at least one ionic hydrophilic group.)

No. of Pages : 91 No. of Claims : 10

(12) PATENT APPLICATION PUBLICATION
(19) INDIA
(22) Date of filing of Application :28/02/2014
(21) Application No.1633/CHENP/2014 A
(43) Publication Date : 08/05/2015

(54) Title of the invention : METHOD AND DEVICE FOR COUPLING A LIGHT BEAM INTO A FOIL

(51) International classification :H01R
(31) Priority Document No :61/531122
(32) Priority Date :06/09/2011
(33) Name of priority country :U.S.A.
(86) International Application No :PCT/IB2012/054540
Filing Date :03/09/2012
(87) International Publication No :WO 2013/035028
(61) Patent of Addition to Application Number :NA
Filing Date :NA
(62) Divisional to Application Number :NA
Filing Date :NA

(71)**Name of Applicant :**
1)KONINKLIJKE PHILIPS N.V.
Address of Applicant :High Tech Campus 5 NL 5656 AE Eindhoven Netherlands
(72)**Name of Inventor :**
1)SCHLEIPEN Johannes Joseph Hubertina Barbara
2)NEIJZEN Jacobus Hermanus Maria

(57) Abstract :
The invention relates to a method and an optical device (150) in which a light beam (L) is coupled into a transparent component for example into a foil (110). The incoupling is achieved by astigmatically focusing a light beam (L) onto an oblong entrance window (W) of the foil (110) wherein a focal line (Fx) of the light beam (L) is oriented along the axis (x) of extension of the entrance window (W). Preferably a second focal line (Fy) of the light beam (L) is disposed inside the transparent component (110) below a region of interest (112).

No. of Pages : 19 No. of Claims : 13

(12) PATENT APPLICATION PUBLICATION
(19) INDIA
(22) Date of filing of Application :28/02/2014
(21) Application No.1634/CHENP/2014 A
(43) Publication Date : 08/05/2015

(54) Title of the invention : OPTICAL BIOSENSOR WITH A PLURALITY OF SENSORS REGIONS

(51) International classification :G01N21/25,G02B3/00
(31) Priority Document No :61/531146
(32) Priority Date :06/09/2011
(33) Name of priority country :U.S.A.
(86) International Application No :PCT/IB2012/054380
Filing Date :27/08/2012
(87) International Publication No :WO 2013/035009
(61) Patent of Addition to Application Number :NA
Filing Date :NA
(62) Divisional to Application Number :NA
Filing Date :NA

(71)**Name of Applicant :**
1)KONINKLIJKE PHILIPS N.V.
Address of Applicant :High Tech Campus 5 NL 5656 AE Eindhoven Netherlands
(72)**Name of Inventor :**
1)SCHLEIPEN Johannes Joseph Hubertina Barbara
2)NEIJZEN Jacobus Hermanus Maria

(57) Abstract :
The invention relates to an optical sensor device (100) that comprises a plurality of objectives (152) for generating primary images of corresponding sensor regions (111). The primary images are then mapped with intermediate optics (153) onto a detector plane (154) particularly onto the sensitive plane of an image sensor.

No. of Pages : 16 No. of Claims : 14

(12) PATENT APPLICATION PUBLICATION
(19) INDIA
(22) Date of filing of Application :28/02/2014
(21) Application No.1635/CHENP/2014 A
(43) Publication Date : 08/05/2015

(54) Title of the invention : WIRE BASED LIGHTING MODULE WITH 3D TOPOGRAPHY

(51) International classification :F21S4/00,F21V23/00,F21K99/00
(31) Priority Document No :11180245.0
(32) Priority Date :06/09/2011
(33) Name of priority country :EPO
(86) International Application No :PCT/IB2012/054419
Filing Date :29/08/2012
(87) International Publication No :WO 2013/035012
(61) Patent of Addition to Application Number :NA
Filing Date :NA
(62) Divisional to Application Number :NA
Filing Date :NA

(71)**Name of Applicant :**
1)KONINKLIJKE PHILIPS N.V.
Address of Applicant :High Tech Campus 5 NL 5656 AE Eindhoven Netherlands
(72)**Name of Inventor :**
1)WEEKAMP Johannes Wilhelmus
2)LIBON Sbastien Paul Ren
3)KUMS Gerard

(57) Abstract :
The present invention relates to a grid shaped lighting module (13; 23) comprising:a plurality of electrically conducting wires (15a b) defining a grid with nodes (16a c); and a plurality of solid state light sources (17a c) each being arranged at a respective one of the nodes and connected to two electrically conducting wires of the plurality of electrically conducting wires. The electrically conducting wires (15a b) are pleated such that the grid shaped lighting module (13; 23) exhibits a 3D topography. Various embodiments of the present invention provide improved mechanical stability and allows for thin illumination panels based on the grid shaped lighting module.

No. of Pages : 16 No. of Claims : 13

(12) PATENT APPLICATION PUBLICATION
(19) INDIA
(22) Date of filing of Application :24/02/2014
(21) Application No.1456/CHENP/2014 A
(43) Publication Date : 08/05/2015

(54) Title of the invention : APPARATUS FOR IRRADIATING SKIN USING LIGHT

(51) International classification :A61N5/06
(31) Priority Document No :1020110088800
(32) Priority Date :02/09/2011
(33) Name of priority country :Republic of Korea
(86) International Application No :PCT/KR2012/006724
Filing Date :23/08/2012
(87) International Publication No :WO 2013/032176
(61) Patent of Addition to Application Number :NA
Filing Date :NA
(62) Divisional to Application Number :NA
Filing Date :NA

(71)**Name of Applicant :**
1)CERAGEM MEDISYS INC.
Address of Applicant :3 2 Jeongchon ri Seonggeo eup Seobuk gu Cheonan si Chungcheongnam do 331 833 Republic of Korea
(72)**Name of Inventor :**
1)LEE Jin Woo
2)CHOI Jae Kyu

(57) Abstract :
The present invention relates to an apparatus for irradiating skin using light for preventing the eyes of a user from being exposed to medical light. The apparatus for irradiating skin with light according to the present invention may comprise: an input unit for a user input; a light source unit which includes at least two colored light sources and which irradiates the skin of the user using the medical light; a contact sensor provided at the periphery of the light source unit; and a controller for controlling the intensity of the light radiated from the light source unit according to whether or not skin contact is detected by the contact sensor wherein the controller can control the intensity of the light from the light source unit in at least two stages before and after the skin contact is detected. Therefore the present invention has the advantage of increased stability since the eyes of the user are not exposed to high intensity medical light.

No. of Pages : 38 No. of Claims : 14

(12) PATENT APPLICATION PUBLICATION
(19) INDIA
(22) Date of filing of Application :27/02/2014
(21) Application No.1595/CHENP/2014 A
(43) Publication Date : 08/05/2015

(54) Title of the invention : SLOT TO SLOT CIRCULATION IN A FLUID EJECTION DEVICE

(51) International classification :B41J2/175,B41J2/14,B41J2/145
(31) Priority Document No :NA
(32) Priority Date :NA
(33) Name of priority country :NA
(86) International Application No:PCT/US2011/053619
Filing Date :28/09/2011
(87) International Publication No :WO 2013/048382
(61) Patent of Addition to Application Number :NA
Filing Date :NA
(62) Divisional to Application Number :NA
Filing Date :NA

(71)**Name of Applicant :**
1)HEWLETT PACKARD DEVELOPMENT COMPANY L.P.
Address of Applicant :11445 Compaq Center Drive W. Houston Texas 77070 U.S.A.
(72)**Name of Inventor :**
1)GOVYADINOV Alexander
2)OLBRICH Craig
3)TAFF Brian M.

(57) Abstract :
In an embodiment a fluid ejection device includes a die substrate having first and second fluid slots along opposite substrate sides and separated by a substrate central region. First and second internal columns of closed chambers are associated with the first and second slots respectively and the internal columns are separated by the central region. Fluidic channels extending across the central region fluidically couple closed chambers from the first internal column with closed chambers from the second internal column. Pump actuators in each closed chamber pump fluid through the channels from slot to slot.

No. of Pages : 41 No. of Claims : 17

(12) PATENT APPLICATION PUBLICATION
(21) Application No.4791/CHE/2013 A
(19) INDIA
(22) Date of filing of Application :24/10/2013
(43) Publication Date : 08/05/2015

(54) Title of the invention : BUOY GRAVITY BUILDING SELF ENERGY

(51) International classification :B28B
(31) Priority Document No :NA
(32) Priority Date :NA
(33) Name of priority country :NA
(86) International Application No :NA
Filing Date :NA
(87) International Publication No : NA
(61) Patent of Addition to Application Number :NA
Filing Date :NA
(62) Divisional to Application Number :NA
Filing Date :NA

(71)**Name of Applicant :**
1)MOHAMMED ABDULLAH
Address of Applicant :H.NO. # 16-49 KHADAK PURA STREET, KURNOOL - 518 001 Andhra Pradesh India
(72)**Name of Inventor :**
1)MOHAMMED ABDULLAH

(57) Abstract :
THE INVENTION OF THIS MECHANISM DESCRIBES OUR MOTTO GENERATING POTENTIAL ENERGY IN TO KINITIC GRAVITATIONAL ELECTRICAL ENERGY. OIL CRISES IN THE PAST AND PRESENT YEARS MADE MORE OBVIOUS THE DEPENDENCY OF ECONOMIES ON FOSSIL FUELS. AS A CONSEQUENCE, THE NEED FOR NEW ENERGY SOURCES BECAME MORE NECESSARY. RENEWABLE ENERGY SOURCES COULD PROVIDE A SOLUTION TO THE PROBLEM, AS THEY ARE INEXHAUSTIBLE AND HAVE LESS ADVERSE IMPACTS ON THE ENVIRONMENT THAN FOSSIL FUELS. AT PRESENT THE RENEWABLE ENERGY SOURCES TECHNOLOGY HAS NOW REACHED A HIGH STANDARD AT WHICH IT CAN BE CONSIDERED MORE COMPETITIVE THAN OTHER RENEWABLE ENERGYES. THE PRESENT INVENTION DISCLOSES CONVERTING GRAVITY FORCE OF EARTHS ATTRACTION PLUS BUOYANT FORCE (NATURAL MECHANISM) IN TO ELECTRICAL ENERGY. AT PRESENT RENEWABLE ENERGY AS A FREE SOURCES HAVE ACHIEVED GREAT SIGNIFICANCE FOR MODERN DAY SOCIETY. THE MAIN REASON FOR THIS BOOM IS THE NEED TO USE ALTERNATIVE SOURCES OF ENERGY TO FOSSIL FUELS WHICH ARE FREE OF C02 EMISSIONS AND CONTAMINATION. AMONG THE CURRENT FREE RENEWABLE ENERGY SOURCES, THE USE OF ! GRAVITATIONAL FORCE HAS BEEN SPECTACULAR IN GENERATING ELECTRICAL POWER. GRAVITATIONAL FORCE POWER USES THE KINETIC ENERGY OF THE GRAVITY TO PRODUCE A CLEAN FORM OF ENERGY WITHOUT PRODUCING CONTAMINATION OR EMISSIONS. THE ENERGY OF GRAVITY AND BUOYANCY CAN BE EFFECTIVELY EXTRACTED FOR PRODUCTION OF ENERGY. THE DOWNWARD MOVEMENT IS CAUSED BY GRAVITATIONAL FORCE OF ACTION. THE MAJOR DIFFERENCE IN THIS NEW APPROACH IS THAT THE 1/4 PART OF CONTAINER FILLED WITH AIR. A AIR CANISTERS CONTAINER IS USED LIKE A FUEL THAT IS USED TO PUSH THE CANISTERS UPWARD/TOWARDS SURFACE WITH SOME GOOD FORCE WHICH CAN BE CONVERTED TO POWER/FORCE OF MOTION. THIS ENERGY DUE TO THE AIR IN CONTAINER WILL GREATLY INCREASE THE EFFICIENCY OF THE WHOLE SYSTEM. ALSO THE LIQUID IN THE TANK REMAINS STABLE THROUGHOUT THE ENTIRE PROCESS. THE DRIVE MECHANISM INCLUDES A LARGE GEAR/PULLY TYPE WHEEL CONNECTED TO GENERATOR/ALTERNATOR. A PISTON CYLINDER BARREL WENT CASING THAT LETS THE CANISTERS CHAIN PASS THROUGH FREE GRAVITY AREA IN TO THE FLUID TANK (BUOYANT AREA). THIS CYCLING PROCESS CONTINUE TO ROTATE THROUGH THE LIQUID TANK (BUOYANT FORCE) AND FREE FALL GRAVITY (GRAVITATIONAL FORCE). NOW THE PRINCIPLES AND DESIGN OF MECHANISM ARE A BEAUTIFUL EXAMPLE OF THE POSSIBILITY PHYSICAL LAWS, AND THAT OFTEN SIMPLICITY IS NOT ONLY BEAUTY, BUT ALSO RELIABLE PERFORMANCE AND LOW COST OF PRODUCT AND FREE OPERATION.

No. of Pages : 10 No. of Claims : 8

(12) PATENT APPLICATION PUBLICATION
(19) INDIA
(22) Date of filing of Application :21/02/2014
(21) Application No.1410/CHENP/2014 A
(43) Publication Date : 08/05/2015

(54) Title of the invention : COMMUNICATION DEVICE COMMUNICATION METHOD COMMUNICATION SYSTEM AND BASE STATION

(51) International classification :H04W52/02,H04W28/06,H04W74/08
(31) Priority Document No :2011191572
(32) Priority Date :02/09/2011
(33) Name of priority country :Japan
(86) International Application No :PCT/JP2012/066129
Filing Date :25/06/2012
(87) International Publication No :WO 2013/031354
(61) Patent of Addition to Application Number :NA
Filing Date :NA
(62) Divisional to Application Number :NA
Filing Date :NA

(71)**Name of Applicant :**
1)SONY CORPORATION
Address of Applicant :1 7 1 Konan Minato ku Tokyo 1080075 Japan
(72)**Name of Inventor :**
1)YOSHIZAWA Atsushi

(57) Abstract :
Provided are a communication device communication method communication system and base station for achieving data transmission by transmitting preamble. The communication device is provided with: a signature selection unit that selects one signature from a plurality of signatures; and a preamble generation unit that generates preamble for random access by using the signature selected by the signature selection unit. The signature selection unit selects signatures corresponding to transmission data values.

No. of Pages : 72 No. of Claims : 19

(12) PATENT APPLICATION PUBLICATION
(21) Application No.1411/CHENP/2014 A
(19) INDIA
(22) Date of filing of Application :21/02/2014
(43) Publication Date : 08/05/2015

(54) Title of the invention : INFORMATION PROCESSING DEVICE INFORMATION PROCESSING METHOD AND PROGRAM

(51) International classification :G09C1/00,H04L9/32
(31) Priority Document No :2011185947
(32) Priority Date :29/08/2011
(33) Name of priority country :Japan
(86) International Application No :PCT/JP2012/070675
Filing Date :14/08/2012
(87) International Publication No :WO 2013/031533
(61) Patent of Addition to Application Number :NA
Filing Date :NA
(62) Divisional to Application Number :NA
Filing Date :NA

(71)**Name of Applicant :**
1)SONY CORPORATION
Address of Applicant :1 7 1 Konan Minato ku Tokyo 1080075 Japan
(72)**Name of Inventor :**
1)SAKUMOTO Koichi
2)SHIRAI Taizo
3)HIWATARI Harunaga
4)KAMIO Kazuya

(57) Abstract :
To be able to efficiently substitute coefficients in multivariate polynomials. [Solution] Provided is an information processing device equipped with: a number generation unit for generating numbers to be used in the coefficients of each term constituting a set (F) (F = f to f) for a multivariate polynomial by using a predetermined function from a set of information shared between entities which execute an algorithm of an electronic signature method or a public key authentication method using a public key containing the set (F) for the multivariate polynomial; and an allocation unit for allocating the numbers generated by means of the number generation unit to the coefficients of a multivariate polynomial in which the set (F) for the abovementioned multivariate polynomial is contained in the constituent element. Among the coefficients of a multivariate polynomial in which the set (F) for the abovementioned multivariate polynomial is contained in the constituent element the allocation unit groups the coefficients of terms having the same types of combinations of variables and executes an allocation process per group.

No. of Pages : 129 No. of Claims : 19

(12) PATENT APPLICATION PUBLICATION
(19) INDIA
(22) Date of filing of Application :26/02/2014
(21) Application No.1532/CHENP/2014 A
(43) Publication Date : 08/05/2015

(54) Title of the invention : SYSTEMS AND METHODS OF PERFORMING LINK SETUP AND AUTHENTICATION

(51) International classification :H04W12/06,H04W12/04,H04L9/08
(31) Priority Document No :61/533627
(32) Priority Date :12/09/2011
(33) Name of priority country :U.S.A.
(86) International Application No :PCT/US2012/054874
Filing Date :12/09/2012
(87) International Publication No :WO 2013/040042
(61) Patent of Addition to Application Number :NA
Filing Date :NA
(62) Divisional to Application Number :NA
Filing Date :NA

(71)**Name of Applicant :**
1)QUALCOMM INCORPORATED
Address of Applicant :Attn: International Ip Administration 5775 Morehouse Drive San Diego California 92121 1714 U.S.A.
(72)**Name of Inventor :**
1)CHERIAN George
2)HAWKES Philip Michael
3)ABRAHAM Santosh Paul
4)SAMPATH Hemanth

(57) Abstract :
Systems and methods of performing link setup and authentication are disclosed. A first method utilizes an unprotected association request and an association response that includes an access point nonce (ANonce). A second method includes receiving during a first link setup using a first ANonce a second ANonce for use in a second link setup. A third method utilizes a temporary key to protect an association request. A fourth method includes generating an ANonce at a mobile device based on an ANonce seed received from an access point.

No. of Pages : 85 No. of Claims : 55

(12) PATENT APPLICATION PUBLICATION
(19) INDIA
(22) Date of filing of Application :26/02/2014
(21) Application No.1533/CHENP/2014 A
(43) Publication Date : 08/05/2015

(54) Title of the invention : SYSTEMS AND METHODS INVOLVING AUGMENTED MENU USING MOBILE DEVICE

(51) International classification :H04W4/18,G06K9/32
(31) Priority Document No :61/530344
(32) Priority Date :01/09/2011
(33) Name of priority country :U.S.A.
(86) International Application No :PCT/US2012/052693
Filing Date :28/08/2012
(87) International Publication No :WO 2013/033109
(61) Patent of Addition to Application Number :NA
Filing Date :NA
(62) Divisional to Application Number :NA
Filing Date :NA

(71)**Name of Applicant :**
1)QUALCOMM INCORPORATED
Address of Applicant :5775 Morehouse Drive San Diego CA 92121 1714 U.S.A.
(72)**Name of Inventor :**
1)DAS Saumitra Mohan
2)SRIDHARA Vinay
3)KHORASHADI Behrooz

(57) Abstract :
The subject matter disclosed herein relates to a method comprising displaying in a camera view of a mobile device a captured image of one or more items listed in a menu of items available for selection at a point of interest identifiable at least in part by a location. A method may further include transmitting a message comprising parsed text of the one or more items and information representative of the location and receiving in response to the transmission of the message annotations to be displayed in the camera view.

No. of Pages : 31 No. of Claims : 37

(12) PATENT APPLICATION PUBLICATION
(19) INDIA
(22) Date of filing of Application :25/10/2013
(21) Application No.4811/CHE/2013 A
(43) Publication Date : 08/05/2015

(54) Title of the invention : METHOD OF PERFORMING CO-SIMULATION

(51) International classification :G05B19/4069
(31) Priority Document No :NA
(32) Priority Date :NA
(33) Name of priority country :NA
(86) International Application No :NA
Filing Date :NA
(87) International Publication No : NA
(61) Patent of Addition to Application Number :NA
Filing Date :NA
(62) Divisional to Application Number :NA
Filing Date :NA

(71)**Name of Applicant :**
1)AKTIEBOLAGET SKF
Address of Applicant :415 50 GOTEBORG Sweden
(72)**Name of Inventor :**
1)RAGHUNANDAN PATTHAR
2)RAJESH MADURI

(57) Abstract :
A method of performing co-simulation is disclosed. In one example embodiment, the method includes coupling a first type of multi-body simulation tool to a second type of multi-body simulation tool. The first type of multi-body simulation tool is capable of performing simulation of bearings and the second type of multi-body simulation tool is capable of performing simulation of machine elements. Then the co-simulation is initiated. For state information coming from the second type of multi-body simulation tool, matching state information is searched in a look-up table associated with the first type of multi-body simulation tool. If the matching state information is found in the look-up table associated with the first type of multi-body simulation tool, a corresponding response value from the look-up table is retrieved and the response value is returned to the second type of multi-body simulation tool.

No. of Pages : 16 No. of Claims : 10

(12) PATENT APPLICATION PUBLICATION
(19) INDIA
(22) Date of filing of Application :24/02/2014
(21) Application No.1453/CHENP/2014 A
(43) Publication Date : 08/05/2015

(54) Title of the invention : COLLABORATIVE CONTEXTUAL ENTERPRISE NETWORKING SYSTEMS AND METHODS

(51) International classification	:G06Q50/30,G06Q10/06,G06Q50/10
(31) Priority Document No	:61/526818
(32) Priority Date	:24/08/2011
(33) Name of priority country	:U.S.A.
(86) International Application No	:PCT/US2012/052339
Filing Date	:24/08/2012
(87) International Publication No	:WO 2013/029003
(61) Patent of Addition to Application Number	:NA
Filing Date	:NA
(62) Divisional to Application Number	:NA
Filing Date	:NA

(71)**Name of Applicant :**
1)TIBCO SOFTWARE INC.
Address of Applicant :3303 Hillview Avenue Palo Alto California 94304 U.S.A.
(72)**Name of Inventor :**
1)CHAKRAVARTHY Sriram
2)JANJANAM Gopala
3)VODNALA Madhav
4)YI Chih Ming
5)WENG Weiwen

(57) Abstract :
Described is an enterprise based contextual network system and method to keep employees connected with one another as well as to external resources. Current media offers a great way to stay in touch with others but is not cohesive and contextual for businesses or generally productive for businesses. The enterprise media disclosed in this application presents a way for businesses to keep all of their employees and outside resources connected but in a professional and efficient manner for the workplace. This enterprise media adapts to its users to create an interface that will help the user complete work connect with others and use various applications all in one place.

No. of Pages : 64 No. of Claims : 17

(12) PATENT APPLICATION PUBLICATION
(19) INDIA
(22) Date of filing of Application :26/02/2014
(21) Application No.1546/CHENP/2014 A
(43) Publication Date : 08/05/2015

(54) Title of the invention : DIFFERENTIAL PHASE CONTRAST IMAGING WITH ENERGY SENSITIVE DETECTION

(51) International classification :G06T5/50,G06T11/00
(31) Priority Document No :61/529450
(32) Priority Date :31/08/2011
(33) Name of priority country :U.S.A.
(86) International Application No :PCT/IB2012/054032
Filing Date :08/08/2012
(87) International Publication No :WO 2013/030698
(61) Patent of Addition to Application Number :NA
Filing Date :NA
(62) Divisional to Application Number :NA
Filing Date :NA

(71)**Name of Applicant :**
1)KONINKLIJKE PHILIPS N.V.
Address of Applicant :High Tech Campus 5 NL 5656 AE Eindhoven Netherlands
(72)**Name of Inventor :**
1)KOEHLER Thomas
2)SCHLOMKA Jens Peter

(57) Abstract :
For correcting differential phase image data 52 differential phase image data 52 acquired with radiation at different energy levels is received wherein the differential phase image data 52 comprises pixels 60 each pixel 60 having a phase gradient value 62a 62b 62c for each energy level. After that an energy dependent behavior of phase gradient values 62a 62b 62c of a pixel 60 is determined and a corrected phase gradient value 68 for the pixel 60 is determined from the phase gradient values 62a 62b 62c of the pixel 60 and a model for the energy dependence of the phase gradient values 62a 62b 62c.

No. of Pages : 22 No. of Claims : 15

(12) PATENT APPLICATION PUBLICATION
(21) Application No.1547/CHENP/2014 A
(19) INDIA
(22) Date of filing of Application :26/02/2014
(43) Publication Date : 08/05/2015

(54) Title of the invention : METHOD FOR SMELTING HIGH ALUMINUM LOW SILICON ULTRAPURE FERRITIC STAINLESS STEEL

(51) International classification :C21C7/10,C21C7/06
(31) Priority Document No :201110327941.2
(32) Priority Date :25/10/2011
(33) Name of priority country :China
(86) International Application No :PCT/CN2012/070096
Filing Date :06/01/2012
(87) International Publication No :WO 2013/060101
(61) Patent of Addition to Application Number :NA
Filing Date :NA
(62) Divisional to Application Number :NA
Filing Date :NA

(71)**Name of Applicant :**
1)BAOSHAN IRON & STEEL CO. LTD.
Address of Applicant :No.885 Fujin Road Baoshan District Shanghai 201900 China
(72)**Name of Inventor :**
1)XU Yingtie
2)CHEN Zhaoping
3)LI Shi

(57) Abstract :
A method for smelting high aluminum low silicon ultrapure ferritic stainless steel. First vacuum oxygen decarburization (VOD) and free decarburization treatment is performed on molten ferritic stainless steel in a VOD furnace then a reduction process of a VOD vacuum treatment process is improved and measures such as preliminary deoxidation final deoxidation vacuum breaking addition of high density aluminum iron control of the alkalinity of slag followed by wire feeding treatment and protected casting in a continuous casting process are taken so as to obtain high aluminum low silicon ultrapure ferritic stainless steel during the continuous casting treatment improve acid pickling performance of the ultrapure ferritic stainless steel further improve the purity of the molten steel and the castable performance in the continuous casting process meanwhile effectively suppress the formation of the harmful inclusion of the magnesia aluminum spinel effectively remove the inclusion of AlO suppress oxidation of titanium in titanium containing steel and avoid blockage of a tundish nozzle in the continuous casting process.

No. of Pages : 28 No. of Claims : 9

(12) PATENT APPLICATION PUBLICATION
(19) INDIA
(22) Date of filing of Application :25/10/2013
(21) Application No.4820/CHE/2013 A
(43) Publication Date : 08/05/2015

(54) Title of the invention : A METHOD AND SYSTEM FOR DETECTING AND CLASSIFYING CARDIAC ARRHYTHMIA

(51) International classification :A61B5/00
(31) Priority Document No :NA
(32) Priority Date :NA
(33) Name of priority country :NA
(86) International Application No :NA
Filing Date :NA
(87) International Publication No : NA
(61) Patent of Addition to Application Number :NA
Filing Date :NA
(62) Divisional to Application Number :NA
Filing Date :NA

(71)**Name of Applicant :**
1)Samsung India Software Operations Pvt Ltd
Address of Applicant :Bagmane Lakeview, Block B, No. 66/1, Bagmane Tech Park, CV Raman Nagar, Byrasandra, Bangalore Karnataka India
(72)**Name of Inventor :**
1)Sandipan Chakroborty
2)Rangavittal Narayanan

(57) Abstract :
A method and system for detecting and classifying cardiac arrhythmias from the ECG signal source is disclosed. The method classifies arrhythmia in two stages, a coarse classification stage and a fine classification stage. The one or more input ECG beats obtained from the processed ECG signal. The input ECG beat is decimated and reference ECG beats from plurality of trained databases are decimated and compressed before classifying in coarse classification stage. The plurality of databases corresponds to a different number of arrhythmia classes. The coarse classification stage identifies one or more surviving classes upon calculating the distance between input ECG beat and reference ECG beats and the identified one or more surviving classes are forwarded to the fine classification stage for further accurate classification and thereby identifying one or more output classes corresponding to input ECG beat.

No. of Pages : 56 No. of Claims : 34

(12) PATENT APPLICATION PUBLICATION
(19) INDIA
(22) Date of filing of Application :26/02/2014
(21) Application No.1541/CHENP/2014 A
(43) Publication Date : 08/05/2015

(54) Title of the invention : MAGNETIC LOAD SENSOR FOR DIRECT ACTING ACTUATOR AND DIRECT ACTING ACTUATOR

(51) International classification :G01L1/04,F16H25/20,G01L1/12
(31) Priority Document No :2011165411
(32) Priority Date :28/07/2011
(33) Name of priority country :Japan
(86) International Application No :PCT/JP2012/068657
Filing Date :24/07/2012
(87) International Publication No :WO 2013/015263
(61) Patent of Addition to Application Number :NA
Filing Date :NA
(62) Divisional to Application Number :NA
Filing Date :NA

(71)**Name of Applicant :**
1)NTN CORPORATION
Address of Applicant :3 17 Kyomachibori 1 chome Nishi ku Osaka shi Osaka 5500003 Japan
(72)**Name of Inventor :**
1)TAKAHASHI Toru
2)YASUI Makoto
3)MASUDA Yui

(57) Abstract :
Provided is a magnetic load sensor that can detect at a high accuracy the magnitude of a load applied by a direct acting actuator said load being in the axis direction. A magnetic load sensor (1) for a direct acting actuator detects the magnitude of a load in the axis direction said load being applied to a friction pad (22) by a direct acting actuator (14). The magnetic load sensor is configured of a magnetic target (4) which generates a magnetic field and a magnetic sensor (5) which is disposed such that the relative position of the magnetic sensor with respect to the magnetic target (4) changes corresponding to the load in the axis direction.

No. of Pages : 51 No. of Claims : 12

(12) PATENT APPLICATION PUBLICATION
(21) Application No.1542/CHENP/2014 A
(19) INDIA
(22) Date of filing of Application :26/02/2014
(43) Publication Date : 08/05/2015

(54) Title of the invention : HOT STAMP MOLDED PART AND METHOD FOR MANUFACTURING SAME

(51) International classification :B21D22/20,C22C18/00,C23C2/06
(31) Priority Document No :2011191063
(32) Priority Date :01/09/2011
(33) Name of priority country :Japan
(86) International Application No :PCT/JP2012/072246
Filing Date :31/08/2012
(87) International Publication No :WO 2013/031984
(61) Patent of Addition to Application Number :NA
Filing Date :NA
(62) Divisional to Application Number :NA
Filing Date :NA

(71)**Name of Applicant :**
1)KABUSHIKI KAISHA KOBE SEIKO SHO
Address of Applicant :10 26 Wakinohama cho 2 chome Chuo ku Kobe shi Hyogo 6518585 Japan
(72)**Name of Inventor :**
1)OKITA Keisuke
2)IKEDA Shushi
3)NAITOU Junya

(57) Abstract :
By the method of the present invention in the manufacture of a hot stamp molded part by molding a surface processed steel sheet formed with Zn Fe plating on a base steel sheet surface using hot stamp molding the surface processed steel sheet is heated to a temperature at or above a transformation point Ac of the base steel sheet and at or below 950°C and molding is started after the surface processed steel sheet is cooled to a temperature at or below the freezing point of the plating layer according to the Fe content of the plating. Separation of the plating layer and intergranular cracking of the parent material are thereby avoided and a hot stamp molded part having good characteristics is manufactured.

No. of Pages : 30 No. of Claims : 5

(12) PATENT APPLICATION PUBLICATION
(21) Application No.1641/CHENP/2014 A
(19) INDIA
(22) Date of filing of Application :28/02/2014
(43) Publication Date : 08/05/2015

(54) Title of the invention : LUMINAIRE OBLIQUELY ORIENTED

(51) International classification :F21V7/09
(31) Priority Document No :11306104.8
(32) Priority Date :06/09/2011
(33) Name of priority country :EPO
(86) International Application No :PCT/IB2012/054542
Filing Date :03/09/2012
(87) International Publication No :WO 2013/035030
(61) Patent of Addition to Application Number :NA
Filing Date :NA
(62) Divisional to Application Number :NA
Filing Date :NA

(71)**Name of Applicant :**
1)KONINKLIJKE PHILIPS N.V.
Address of Applicant :High Tech Campus 5 NL 5656 AE Eindhoven Netherlands
(72)**Name of Inventor :**
1)MONTAGNE Louis

(57) Abstract :
The invention relates to a luminaire arranged to illuminate a surface comprising: a light source emitting light rays; a reflective device comprising: a main reflective member (50) arranged to redirect the light rays according to a primary light beam for illuminating a main area (27) of the surface the light rays being obliquely oriented with respect to the surface an edge (11) of the main area (27) defining accordingly a curve (7) having an apex (29) and a referential line (60) not crossing the curve and being separated from the apex by a determined distance is defined; secondary reflective concave elements (40) designed and arranged with respect to the main reflective member so as to illuminate according to respective secondary light beams respective secondary areas (33 331 35 351 36 361) located between the curve and the referential line. The invention also relates to an optical accessory.

No. of Pages : 18 No. of Claims : 15

(12) PATENT APPLICATION PUBLICATION
(21) Application No.4876/CHE/2013 A
(19) INDIA
(22) Date of filing of Application :29/10/2013
(43) Publication Date : 08/05/2015

(54) Title of the invention : A METHOD AND DEVICE TO ESTIMATE NOX VALUE IN AN INTERNAL COMBUSTION ENGINE

(51) International classification :F01N3/00
(31) Priority Document No :NA
(32) Priority Date :NA
(33) Name of priority country :NA
(86) International Application No :NA
Filing Date :NA
(87) International Publication No : NA
(61) Patent of Addition to Application Number :NA
Filing Date :NA
(62) Divisional to Application Number :NA
Filing Date :NA

(71)**Name of Applicant :**
1)Bosch Limited
Address of Applicant :Post Box No 3000, Hosur Road, Adugodi, Bangalore 560030, Karnataka, INDIA
2)Robert Bosch GmbH
(72)**Name of Inventor :**
1)MURTHY Sandeep Dhakshina

(57) Abstract :
A method for estimating an NOx value (27) in an IC engine of a vehicle, said method comprising the steps : determining (S1) an engine speed (11), determining (S2) an amount of fuel injection (13), determining (S3) NOx base value (16) dependent on said determined engine speed (11) and amount of fuel injection (13), estimating (S4) NOx Raw value (19) dependent on said determined Nox base value (16) and a predetermined lookup table (17), determining (S5) NOx sensor value (21) from a NOx sensor (5) located downstream catalytic converter, comparing (S6) the estimated NOx Raw value (19) with the NOx sensor value (21) to determine the difference value (23), determining (S7) correction factor (25) dependent on said difference value (23) and a predetermined correction map (30) and estimating (S8) the NOx value (27) depending on said estimated NOx Raw value (19) and said correction factor (25).

No. of Pages : 11 No. of Claims : 4

(12) PATENT APPLICATION PUBLICATION
(19) INDIA
(22) Date of filing of Application :25/02/2014
(21) Application No.1505/CHENP/2014 A
(43) Publication Date : 08/05/2015

(54) Title of the invention : AN APPARATUS FOR PROCESSING A FOOD STUFF

(51) International classification :A47J43/07
(31) Priority Document No :11179689.2
(32) Priority Date :01/09/2011
(33) Name of priority country :EPO
(86) International Application No :PCT/IB2012/054221
Filing Date :21/08/2012
(87) International Publication No :WO 2013/030716
(61) Patent of Addition to Application Number :NA
Filing Date :NA
(62) Divisional to Application Number :NA
Filing Date :NA

(71)**Name of Applicant :**
1)KONINKLIJKE PHILIPS N.V.
Address of Applicant :High Tech Campus 5 NL 5656 AE Eindhoven Netherlands
(72)**Name of Inventor :**
1)UNTEREGGER Johann
2)ROSENWIRTH Christian

(57) Abstract :
The present application relates to an apparatus for processing a food stuff. The apparatus has a housing (2) and a cutting tool (5) for cutting a food stuff which is rotatably mounted in the housing. The cutting tool (5) rotates in the housing (2) about a rotational axis and has a radially extending cutting element (44). One end of the cutting tool (5) slides in a circumferentially extending slot in the housing as the cutting tool (5) is rotated in the housing (2). Therefore the cutting tool (5) is supported in an axial direction by the housing (2). The present application also relates to a food processor.

No. of Pages : 21 No. of Claims : 15

(12) PATENT APPLICATION PUBLICATION
(19) INDIA
(22) Date of filing of Application :25/02/2014
(21) Application No.1506/CHENP/2014 A
(43) Publication Date : 08/05/2015

(54) Title of the invention : A LID FOR A FOOD PROCESSOR

(51) International classification :A47J43/07,A47J43/044
(31) Priority Document No :61/529946
(32) Priority Date :01/09/2011
(33) Name of priority country :U.S.A.
(86) International Application No :PCT/IB2012/054186
Filing Date :17/08/2012
(87) International Publication No :WO 2013/030710
(61) Patent of Addition to Application Number :NA
Filing Date :NA
(62) Divisional to Application Number :NA
Filing Date :NA

(71)**Name of Applicant :**
1)KONINKLIJKE PHILIPS N.V.
Address of Applicant :High Tech Campus 5 5656 AE Eindhoven Netherlands
(72)**Name of Inventor :**
1)MERL Martin Ewald

(57) Abstract :
The present application relates to a lid (3) for a food processor (1). The lid is releasably attachable to a container (3) to enclose a food processing tool unit (4) which is operated by a drive unit (5). The lid (3) has a drive unit mount (28) to releasably mount a drive unit (5) to the lid (3) an attachment element to releasably attach the lid (3) to a container (2) and a locking element operable to engage a container (2) attached to the lid (3) when a drive unit (5) is mounted to the lid (3). Therefore detachment of the lid (3) from a container (2) is prevented by the locking element when a drive unit (5) is mounted to the lid (3). The present application also relates to a food processor (1).

No. of Pages : 24 No. of Claims : 15

(12) PATENT APPLICATION PUBLICATION
(21) Application No.4871/CHE/2013 A
(19) INDIA
(22) Date of filing of Application :29/10/2013
(43) Publication Date : 08/05/2015

(54) Title of the invention : FIBER-REINFORCED CERAMIC MATRIX COMPOSITE MATERIAL WITH POLYMER DERIVED INTERFACE COATING

(51) International classification :C04B
(31) Priority Document No :NA
(32) Priority Date :NA
(33) Name of priority country :NA
(86) International Application No :NA
Filing Date :NA
(87) International Publication No : NA
(61) Patent of Addition to Application Number :NA
Filing Date :NA
(62) Divisional to Application Number :NA
Filing Date :NA

(71)**Name of Applicant :**
1)INDIAN SPACE RESEARCH ORGANISATION
Address of Applicant :DEPARTMENT OF SPACE, ANTARIKSH BHAVAN, NEW BEL ROAD, BANGALORE 560 094 Karnataka India
(72)**Name of Inventor :**
1)RENJITH DEVASIA
2)SANDHYA GOPINATHAN NAIR
3)KRISHNAN NAIR JAYAKUMARY SREEJITH
4)SHANMUGAM PACKIRISAMY

(57) Abstract :
This invention relates to a polymer derived interface coating (22) for a fibrous material (21) comprising a natural or crystalline graphitic structure of a polyacrylonitrile derived pyrocarbon interface containing from 0.5 wt% to 1.0 wt% of polyacrylonitrile and having a flexural strength of 146 to 163 MPa with an average coating thickness of 0.5 to 1.0 um.

No. of Pages : 38 No. of Claims : 32

(12) PATENT APPLICATION PUBLICATION
(19) INDIA
(22) Date of filing of Application :29/10/2013
(21) Application No.4873/CHE/2013 A
(43) Publication Date : 08/05/2015

(54) Title of the invention : A METERING UNIT AND A FUEL INJECTION SYSTEM THEREOF

(51) International classification :F02M69/50
(31) Priority Document No :NA
(32) Priority Date :NA
(33) Name of priority country :NA
(86) International Application No :NA
Filing Date :NA
(87) International Publication No : NA
(61) Patent of Addition to Application Number :NA
Filing Date :NA
(62) Divisional to Application Number :NA
Filing Date :NA

(71)**Name of Applicant :**
1)Bosch Limited
Address of Applicant :Post Box No 3000, Hosur Road, Adugodi, Bangalore 560030, Karnataka, INDIA
2)Robert Bosch GmbH
(72)**Name of Inventor :**
1)PLAPARAMBIL Jeemon
2)KOUSHIK Mohan

(57) Abstract :
A metering unit and a fuel injection system is disclosed. The metering unit 10 for a fuel injection system comprises a housing 12 comprising a bore 14 and a circumferential groove 15 in fluid communication with said bore 14 and a piston 16 adapted to reciprocate in the bore 14. At least a portion of the piston 16 is in fluid communication with a fuel inlet 18 in the housing 12. The piston 16 comprises at least one opening 20 on the portion of the piston 16 in fluid communication with fuel inlet 18. The profile of at least one opening 20 being such that the metering unit 10 controls the quantity of fuel flowing back to a fuel tank.

No. of Pages : 14 No. of Claims : 10

(12) PATENT APPLICATION PUBLICATION
(19) INDIA
(22) Date of filing of Application :29/10/2013
(21) Application No.4874/CHE/2013 A
(43) Publication Date : 08/05/2015

(54) Title of the invention : A CIRCUIT TO REDUCE POWER DISSIPATION OF POWER STAGE AND A METHOD THEREOF

(51) International classification :H02M3/00
(31) Priority Document No :NA
(32) Priority Date :NA
(33) Name of priority country :NA
(86) International Application No :NA
Filing Date :NA
(87) International Publication No : NA
(61) Patent of Addition to Application Number :NA
Filing Date :NA
(62) Divisional to Application Number :NA
Filing Date :NA

(71)**Name of Applicant :**
1)Robert Bosch Engineering and Business Solutions Limited
Address of Applicant :123, Industrial Layout, Hosur Road, Koramangala, Bangalore 560095, Karnataka, INDIA
2)Robert Bosch GmbH
(72)**Name of Inventor :**
1)SELVAMANI Anesh
2)BADIGER Manohar
3)SHANKARANARAYANA Pruthvi

(57) Abstract :
A circuit (100) to drive an inductive load (30), said circuit comprising, a driving switch (10) connected in series with said inductive load (30), a freewheeling switch (20) connected across said inductive load (30), a switch controller (50) coupled to the driving switch (10) and the freewheeling switch (20) for controlling switch ON/OFF of the driving and freewheeling switches (10, 20) to control operation of said inductive load (30), said circuit characterized in that a sensing means (61) to sense the voltage at a high side (35) of the inductive load (30) when switch OFF of said driving switch (10) is detected and said switch controller (50) adapted to switch ON said freewheeling switch (20) based on said sensed voltage at high side (35) of said inductive load (30) .

No. of Pages : 19 No. of Claims : 7

(12) PATENT APPLICATION PUBLICATION
(21) Application No.1450/CHENP/2014 A
(19) INDIA
(22) Date of filing of Application :24/02/2014
(43) Publication Date : 08/05/2015

(54) Title of the invention : DESALINIZATION SYSTEM AND DESALINIZATION METHOD

(51) International classification :C02F1/44,B01D61/02,B01D61/06
(31) Priority Document No :2011184562
(32) Priority Date :26/08/2011
(33) Name of priority country :Japan
(86) International Application No :PCT/JP2012/070794
Filing Date :16/08/2012
(87) International Publication No :WO 2013/031544
(61) Patent of Addition to Application Number :NA
Filing Date :NA
(62) Divisional to Application Number :NA
Filing Date :NA

(71)**Name of Applicant :**
1)HITACHI LTD.
Address of Applicant :6 6 Marunouchi 1 chome Chiyoda ku Tokyo 1008280 Japan
(72)**Name of Inventor :**
1)SASAKI Akira
2)NOTO Kazuhiko
3)SEKINE Yasunori
4)KITAMURA Kotaro

(57) Abstract :
The desalinization system (S) in the first present invention which converts seawater and wastewater to fresh water is provided with a heat exchanger (6) that exchanges heat between wastewater or treated wastewater and seawater. The desalinization system (S) in the second present invention which also converts seawater and wastewater to fresh water is provided with the following: a membrane separation activated sludge treatment device (1) that treats wastewater using a membrane separation activated sludge method; a first RO membrane (2) that removes salt from the output (s5a) of the membrane separation activated sludge treatment device (1) by transferring said salt to first concentrated water (s6) thereby producing industrial use water (s1); a UF membrane (3) that seawater passes through and that removes particulates from said seawater; a second RO membrane (5) to which treated water (s5b) that has passed through the UF membrane (3) is sent whereby salt is removed from said treated water (s5b) and transferred to second concentrated water (s7) thereby producing drinking water (s2); and a heat exchanger (6) that exchanges heat between the wastewater or treated wastewater (s5a s6 s1) and seawater.

No. of Pages : 30 No. of Claims : 9

(12) PATENT APPLICATION PUBLICATION
(19) INDIA
(22) Date of filing of Application :26/02/2014
(21) Application No.1543/CHENP/2014 A
(43) Publication Date : 08/05/2015

(54) Title of the invention : METHODS AND APPARATUSES FOR TRANSMITTING AND FOR RECEIVING MULTIMEDIA CONTENTS

(51) International classification :G06T1/00,H04N5/00
(31) Priority Document No :TO2011A000723
(32) Priority Date :03/08/2011
(33) Name of priority country :Italy
(86) International Application No :PCT/IB2012/053967
Filing Date :02/08/2012
(87) International Publication No :WO 2013/018058
(61) Patent of Addition to Application Number :NA
Filing Date :NA
(62) Divisional to Application Number :NA
Filing Date :NA

(71)**Name of Applicant :**
1)SISVEL TECHNOLOGY S.R.L.
Address of Applicant :Via Castagnole 59 I 10060 None (TO) Italy
2)CSP INNOVAZIONE NELLE ICT SCARL
3)S.I.SV.EL SOCIETA ITALIANA PER LO SVILUPPO DELLELETTRONICA S.P.A.
(72)**Name of Inventor :**
1)SAGLIOCCO Sergio
2)SILEO Leonardo
3)BORRI Roberto

(57) Abstract :
The present invention relates to methods and apparatuses for transmitting and receiving multimedia contents comprising at least two components (C1 C2); the reception method entails the reception of a first component (C1) from a first transmission medium (DVB) and the reception of a second component (C2) from a second transmission medium (IP) as well as the steps of: detecting (A4) a first watermark sequence from said first component (C1) detecting (A4) a second watermark sequence from said second component (C2) synchronizing (A5) said first and second components (C1 C2) on the basis of said first and second watermark sequences and combining (A6) said synchronized first and second components (C1 C2) to form said multimedia content (MM); of course said reception method provides the desired results if both components have been suitably and repeatedly marked prior to transmission.

No. of Pages : 26 No. of Claims : 16

(12) PATENT APPLICATION PUBLICATION
(21) Application No.1544/CHENP/2014 A
(19) INDIA
(22) Date of filing of Application :26/02/2014
(43) Publication Date : 08/05/2015

(54) Title of the invention : PIEZOELECTRIC RESONATOR HAVING COMBINED THICKNESS AND WIDTH VIBRATIONAL MODES

(51) International classification :H03H9/56,H03H9/02
(31) Priority Document No :13/241356
(32) Priority Date :23/09/2011
(33) Name of priority country :U.S.A.
(86) International Application No :PCT/US2012/056962
Filing Date :24/09/2012
(87) International Publication No :WO 2013/044262
(61) Patent of Addition to Application Number :NA
Filing Date :NA
(62) Divisional to Application Number :NA
Filing Date :NA

(71)**Name of Applicant :**
1)QUALCOMM Incorporated
Address of Applicant :Attn: International Ip Administration 5775 Morehouse Drive San Diego California 92121 U.S.A.
(72)**Name of Inventor :**
1)ZUO Chengjie
2)LO Chi Shun
3)JOO Sanghoon
4)YUN Changhan
5)KIM Jonghae

(57) Abstract :
A method and apparatus for a piezoelectric resonator (200) having combined thickness (220T) and width (220W) vibrational modes are disclosed. A piezoelectric resonator may include a piezoelectric substrate (210) and a first electrode (205) coupled to a first surface of the piezoelectric substrate. The piezoelectric resonator may further include a second electrode (215) coupled to a second surface of the piezoelectric substrate where the first surface and the second surface are substantially parallel and define a thickness dimension of the piezoelectric substrate. Furthermore the thickness dimension (T) and the width (W) dimension of the piezoelectric substrate are configured to produce a resonance from a coherent combination of a thickness vibrational mode and a width vibrational mode when an excitation signal is applied to the electrodes.

No. of Pages : 23 No. of Claims : 23

(12) PATENT APPLICATION PUBLICATION
(21) Application No.4892/CHE/2013 A
(19) INDIA
(22) Date of filing of Application :30/10/2013
(43) Publication Date : 08/05/2015

(54) Title of the invention : NOVEL POLYMORPHIC FORM - A OF BISOXATIN ACETATE

(51) International classification :C07D
(31) Priority Document No :NA
(32) Priority Date :NA
(33) Name of priority country :NA
(86) International Application No :NA
Filing Date :NA
(87) International Publication No : NA
(61) Patent of Addition to Application Number :NA
Filing Date :NA
(62) Divisional to Application Number :NA
Filing Date :NA

(71)**Name of Applicant :**
1)OPTIMUS DRUGS (P) LTD
Address of Applicant :#1-2-11/1, ABOVE SBI BANK, STREET NO. 2, KAKATIYA NAGAR, HABSIGUDA, HYDERABAD - 500 007 Andhra Pradesh India
(72)**Name of Inventor :**
1)DESI REDDY, SRINIVAS REDDY
2)RANE, DNYANDEV RAGHO
3)VELIVELA, SRINIVAS RAO
4)PEKETI, SUBBAREDDY

(57) Abstract :
The present invention relates to a novel polymorphic form-A of Bisoxatin acetate and preparation thereof. The present invention further relates to an improved process for the preparation of Bisoxatin acetate

No. of Pages : 14 No. of Claims : 9

(12) PATENT APPLICATION PUBLICATION
(19) INDIA
(22) Date of filing of Application :28/02/2014
(21) Application No.1636/CHENP/2014 A
(43) Publication Date : 08/05/2015

(54) Title of the invention : LIGHT EMITTING PANEL WITH TRANSPARENT CELLULAR SUPPORT PANEL

(51) International classification :G02B6/00
(31) Priority Document No :11180239.3
(32) Priority Date :06/09/2011
(33) Name of priority country :EPO
(86) International Application No :PCT/IB2012/054435
Filing Date :29/08/2012
(87) International Publication No :WO 2013/035016
(61) Patent of Addition to Application Number :NA
Filing Date :NA
(62) Divisional to Application Number :NA
Filing Date :NA

(71)**Name of Applicant :**
1)KONINKLIJKE PHILIPS N.V.
Address of Applicant :High Tech Campus 5 NL 5656 AE Eindhoven Netherlands
(72)**Name of Inventor :**
1)KRIJN Marcellinus Petrus Carolus Michael
2)PIJLMAN Fetze
3)SWINKELS Stefan Henricus
4)ONAC Gabriel Eugen
5)VISSENBERG Michel Cornelis Josephus Marie

(57) Abstract :
The present invention relates to alight emitting panel (1) comprising: a first panel sheet (11) the first panel sheet being optically transparent; a second panel sheet (12); and a cellular support panel (10) sandwiched between the first panel sheet and the second panel sheet. The cellular support panel comprises optically transparent cell walls (13) defining a plurality of tubular channels (14) extending from the first panel sheet towards the second panel sheet. The light emitting panel (1) further comprises a two dimensional light source array (15;16;24;27) comprising a plurality of light sources (18a b;19a b) each being arranged to emit light into at least one of the tubular channels of the cellular support panel. Various embodiments of the present invention provide a cost efficient light emitting panel with advantageous light emission and mechanical properties.

No. of Pages : 17 No. of Claims : 15

(12) PATENT APPLICATION PUBLICATION
(21) Application No.1637/CHENP/2014 A
(19) INDIA
(22) Date of filing of Application :28/02/2014
(43) Publication Date : 08/05/2015

(54) Title of the invention : METHOD FOR MANUFACTURING A LED MATRIX AND A DEVICE COMPRISING A LED MATRIX

(51) International classification :H05K1/02,F21S4/00,H05K3/20
(31) Priority Document No :11180233.6
(32) Priority Date :06/09/2011
(33) Name of priority country :EPO
(86) International Application No :PCT/IB2012/054436
Filing Date :29/08/2012
(87) International Publication No :WO 2013/035017
(61) Patent of Addition to Application Number :NA
Filing Date :NA
(62) Divisional to Application Number :NA
Filing Date :NA

(71)**Name of Applicant :**
1)KONINKLIJKE PHILIPS N.V.
Address of Applicant :High Tech Campus 5 NL 5656 AE Eindhoven Netherlands
(72)**Name of Inventor :**
1)DINGEMANS Antonius Petrus Marinus
2)WEEKAMP Johannes Wilhelmus
3)LIBON Sbastien Paul Ren
4)KUMS Gerard
5)CENNINI Giovanni

(57) Abstract :
There is provided a method for manufacturing a light emitting diode LED matrix (100) comprising the steps of providing with a maintained integrity a conductor sheet (150) with a plurality of component areas (111) interconnected with meandering connection tracks (116) mounting a plurality of LEDs (120) to a respective component area thereby forming a subassembly (100´) trimming and stretching the subassembly thereby straightening the connection tracks such that an mxn LED conductor matrix is formed during the step of stretching.

No. of Pages : 15 No. of Claims : 13

(12) PATENT APPLICATION PUBLICATION
(21) Application No.3365/CHE/2013 A
(19) INDIA
(22) Date of filing of Application :29/07/2013
(43) Publication Date : 08/05/2015

(54) Title of the invention : DEVELOPMENT OF POLYMER METAL MATRIX COMPOSTE (PMMC) TUBES THROUGH FILAMENT WIND

(51) International classification :c22c
(31) Priority Document No :NA
(32) Priority Date :NA
(33) Name of priority country :NA
(86) International Application No :NA
Filing Date :NA
(87) International Publication No : NA
(61) Patent of Addition to Application Number :NA
Filing Date :NA
(62) Divisional to Application Number :NA
Filing Date :NA

(71)**Name of Applicant :**
1)DR. G. HEMATH KUMAR
Address of Applicant :PROFESSOR AND HEAD, DEPARTMENT OF AERONAUTICAL ENGINEERING, JAYA ENGINEERING COLLEGE, THIRNINRAVUR, CHENNAI Tamil Nadu India
2)H.MOHIT
(72)**Name of Inventor :**
1)DR.G. HEMATH KUMAR

(57) Abstract :
Tubes and pipes are employed in automobile fuel lines, manifolds, exhaust pipes hydraulic machines, plumbing, aeronautical engines pipe lines, heat exchangers, refrigerators, air conditioners, nozzles, diffusers, etc. are often subjected to extreme operating conditions like heat flow cycles, and compression stress. The objective of the proposed research is to fabricate Polymer Metal Matrix Composite (PMMC) which is a combination of PMC and MMC. Tubes will be fabricated by wet filament winding method employing Al-SiCp powders as a filler material and three helical winding angle configurations. The test specimen will be a hollow tube of length 300 mm, 70 mm diameter and 250 mm gauge length. Test such as internal pressure and slip ring test will be conducted and maximum life cycle of the tube will be identified. The proposed work, polymer metal matrix composite, will produce tubes which are having not only light weight, but enough stiffness with good electrical and thermal behavior. They are expected to have good fatigue resistance and long life.

No. of Pages : 8 No. of Claims : 6

(12) PATENT APPLICATION PUBLICATION
(19) INDIA
(22) Date of filing of Application :30/10/2013
(21) Application No.4890/CHE/2013 A
(43) Publication Date : 08/05/2015

(54) Title of the invention : AN ELECTRICITY METER CAPABLE DETECTING THE MEASUREMENT UNCERTAINTY

(51) International classification :G01R35/00
(31) Priority Document No :NA
(32) Priority Date :NA
(33) Name of priority country :NA
(86) International Application No :NA
Filing Date :NA
(87) International Publication No : NA
(61) Patent of Addition to Application Number :NA
Filing Date :NA
(62) Divisional to Application Number :NA
Filing Date :NA

(71)**Name of Applicant :**
1)SCHNEIDER ELECTRIC INDIA PRIVATE LIMITED
Address of Applicant :#44P, ELECTRONIC CITY, EAST PHASE, HOSUR ROAD, BANGALORE 560 100 Karnataka India
(72)**Name of Inventor :**
1)THARANATH NAIK
2)DENNIS J EMMATTY

(57) Abstract :
The electricity meter capable of detecting a measurement uncertainty without disturbing a normal operation is provided. The electricity meter includes one or more phase lines (R, Y, B) and a neutral line (N), one or more current measuring means (CT1-CT4) which are positioned in a current measuring path, a voltage measuring means (ADC) which is positioned in a voltage measuring path, one or more controlling switches (SW1-SW3 & T1-T4) which are positioned prior to each of the current measuring means and the voltage measuring means, and a microcontroller which is configured (i) to selectively control at least one of the plurality of controlling switches at a predefined interval and (ii) to detect the measurement uncertainty in the electricity meter.

No. of Pages : 18 No. of Claims : 10

(12) PATENT APPLICATION PUBLICATION
(19) INDIA
(22) Date of filing of Application :25/02/2014
(21) Application No.1515/CHENP/2014 A
(43) Publication Date : 08/05/2015

(54) Title of the invention : PULPING PROCESSES

(51) International classification :D21C3/02
(31) Priority Document No :61/529211
(32) Priority Date :30/08/2011
(33) Name of priority country :U.S.A.
(86) International Application No :PCT/US2012/053124
Filing Date :30/08/2012
(87) International Publication No :WO 2013/033386
(61) Patent of Addition to Application Number :NA
Filing Date :NA
(62) Divisional to Application Number :NA
Filing Date :NA

(71)**Name of Applicant :**
1)CARGILL INCORPORATED
Address of Applicant :15407 McGinty Road West MS 24 Wayzata Minnesota 55391 U.S.A.
(72)**Name of Inventor :**
1)HAWKINS Brent A.
2)MARTIN Fred

(57) Abstract :
A pulping process comprises using a high concentration of anthraquinone (AQ). The pulping process is capable of providing a pulp having low Kappa number with unexpectedly high strength. The pulping process can use wood or non wood fibers (e.g. bagasse and corn stover) to provide pulp having good papermaking quality. The method for pulping a fiber comprising cooking a first mixture comprising the fibers water an alkali and a delignification selectivity enhancing chemical for a cooking time and at a cooking condition sufficient to form a first pulp having a desired Kappa number of about 15 or less and strength parameters that are sufficient for papermaking where the starting material prior to cooking has a Kappa number of 60 or greater.

No. of Pages : 56 No. of Claims : 27

(12) PATENT APPLICATION PUBLICATION
(19) INDIA
(22) Date of filing of Application :26/02/2014
(21) Application No.1565/CHENP/2014 A
(43) Publication Date : 08/05/2015

(54) Title of the invention : DAMAGE EVALUATION METHOD AND MAINTENANCE EVALUATION INDEX POLICY

(51) International classification :G01N17/00
(31) Priority Document No :2011199342
(32) Priority Date :13/09/2011
(33) Name of priority country :Japan
(86) International Application No :PCT/JP2012/072858
Filing Date :07/09/2012
(87) International Publication No :WO 2013/038995
(61) Patent of Addition to Application Number :NA
Filing Date :NA
(62) Divisional to Application Number :NA
Filing Date :NA

(71)**Name of Applicant :**
1)MITSUBISHI HEAVY INDUSTRIES LTD.
Address of Applicant :16 5 Konan 2 chome Minato ku Tokyo 1088215 Japan
(72)**Name of Inventor :**
1)KOMAI Nobuyoshi
2)FUKUSHIMA Hiroaki
3)HIRAKAWA Yuichi
4)OHYAMA Hiroyuki
5)MIYAZAWA Takeshi
6)YOSHIDA Hiroaki

(57) Abstract :
The first measurements of parts of a subject of specific physical quantities are matched to a damage evaluation index and the degree of damage corresponding to the first measurements is calculated. The specific physical quantities at the locations corresponding to the first measurement locations are measured at least once in another time period having a different time used than for the first measurements and are matched to the degree of damage calculated based on the second and later measurements and the temporal changes corresponding to the second and later measurement times. A new damage evaluation index is approximately calculated based on the relationship between the first and the second and later measurements and the degree of damage corresponding to the first and the second and later measurements.

No. of Pages : 29 No. of Claims : 8

(12) PATENT APPLICATION PUBLICATION
(19) INDIA
(22) Date of filing of Application :31/10/2013
(21) Application No.4900/CHE/2013 A
(43) Publication Date : 08/05/2015

(54) Title of the invention : HEAT RESISTANT BIO-ADHESIVES

(51) International classification :C08G83/00
(31) Priority Document No :NA
(32) Priority Date :NA
(33) Name of priority country :NA
(86) International Application No :NA
Filing Date :NA
(87) International Publication No : NA
(61) Patent of Addition to Application Number :NA
Filing Date :NA
(62) Divisional to Application Number :NA
Filing Date :NA

(71)**Name of Applicant :**
1)EMPIRE TECHNOLOGY DEVELOPMENT LLC
Address of Applicant :2711 Centerville Road, Suite 400, Wilmington, DE 19808, United States of America U.S.A.
(72)**Name of Inventor :**
1)AROCKIADOSS THEVASAHAYAM

(57) Abstract :
An adhesive material produced by contacting a catechol with an amine may be stable under heated conditions and produce minimal outgassing under vacuum. The catechol may be an un-substituted catechol or a substituted catechol, such as hydroxychavicol. In some examples, the catechol may be derived from botanical sources. The amine may be a diamine, such as phenylene diamine. The adhesive polymer may form dendritic structures or macrocyclic structures. A joined article may be fabricated from two materials by applying the adhesive to a prepared surface of at least one of the materials, and the two materials may be placed together with the adhesive between them. The adhesive in the joined article may be cured at ambient temperature or under heating conditions.

No. of Pages : 22 No. of Claims : 10

(12) PATENT APPLICATION PUBLICATION
(21) Application No.938/CHE/2014 A
(19) INDIA
(22) Date of filing of Application :25/02/2014
(43) Publication Date : 08/05/2015

(54) Title of the invention : AUTOMOTIVE FRONT VEHICLE BODY STRUCTURE

(51) International classification :A47L
(31) Priority Document No :2013-060000
(32) Priority Date :22/03/2013
(33) Name of priority country :Japan
(86) International Application No :NA
Filing Date :NA
(87) International Publication No : NA
(61) Patent of Addition to Application Number :NA
Filing Date :NA
(62) Divisional to Application Number :NA
Filing Date :NA

(71)**Name of Applicant :**
1)SUZUKI MOTOR CORPORATION
Address of Applicant :300, Takatsuka-cho, Minami-ku, Hamamatsu-shi, Shizuoka-Ken , Japan
(72)**Name of Inventor :**
1)Shinya SAKAZAKI

(57) Abstract :
To provide an automotive front vehicle body structure in which the mounting position of a headlamp with respect to a vehicle body can be adjusted so as to improve the problem of the boundary between a bumper and the headlamp, and by which the bumper can also be held. There is provided an automobile front vehicle body structure in which left and right headlamps are arranged above a bumper attached to a vehicle body, and in which the headlamp is attached to the vehicle body at mounting sections located at a plurality of places on at least the inner and other sides in the vehicle width direction, the front vehicle body structure being featured in that a headlamp bracket 12 is joined to a mounting surface of a part of which an upper end section is joined to a member that is provided on the upper side of a front end portion of an engine compartment so as to extend in the vehicle width direction, in that a welding surface of the headlamp bracket 12, which welding surface is welded to the vehicle body 1, is composed of a plurality of surfaces which respectively face mounting surfaces of the vehicle body 1, and which are positionally adjustable in the vertical direction and the width direction of the vehicle body 1 along the mounting surfaces of the vehicle body 1, and in that the vehicle width direction inner side mounting section 34 of the headlamp 3 is attached to mounting sections 12e and 121 of the headlamp bracket 12.

No. of Pages : 30 No. of Claims : 6

(12) PATENT APPLICATION PUBLICATION
(21) Application No.4797/CHE/2013 A
(19) INDIA
(22) Date of filing of Application :24/10/2013
(43) Publication Date : 08/05/2015

(54) Title of the invention : TRANSITION METAL DICHALCOGENIDE AEROGELS AND METHODS OF PREPARATION AND USE

(51) International classification :C01B33/00
(31) Priority Document No :NA
(32) Priority Date :NA
(33) Name of priority country :NA
(86) International Application No :NA
Filing Date :NA
(87) International Publication No : NA
(61) Patent of Addition to Application Number :NA
Filing Date :NA
(62) Divisional to Application Number :NA
Filing Date :NA

(71)**Name of Applicant :**
1)EMPIRE TECHNOLOGY DEVELOPMENT LLC
Address of Applicant :2711 Centerville Road, Suite 400, Wilmington, DE 19808, United States of America. Tamil Nadu India
(72)**Name of Inventor :**
1)Arockiadoss THEVASAHAYAM

(57) Abstract :
Methods of forming transition metal dichalcogenide aerogels are provided. Some methods include adding at least one solvent to one or more two-dimensional transition metal dichalcogenide sheets to form a transition metal dichalcogenide solution and freeze drying the transition metal dichalcogenide solution to form frozen transition metal dichalcogenide. The methods also include heating the frozen transition metal dichalcogenide to form a transition metal dichalcogenide aerogel.

No. of Pages : 24 No. of Claims : 10

(12) PATENT APPLICATION PUBLICATION
(21) Application No.4883/CHE/2013 A
(19) INDIA
(22) Date of filing of Application :30/10/2013
(43) Publication Date : 08/05/2015

(54) Title of the invention : MULTIPURPOSE HAND - HELD COOLING CUM CLEANING DEVICE

(51) International classification :F24D
(31) Priority Document No :NA
(32) Priority Date :NA
(33) Name of priority country :NA
(86) International Application No :NA
Filing Date :NA
(87) International Publication No : NA
(61) Patent of Addition to Application Number :NA
Filing Date :NA
(62) Divisional to Application Number :NA
Filing Date :NA

(71)**Name of Applicant :**
1)DEPARTMENT OF MECHANICAL ENGINEERING, SSN COLLEGE OF ENGINEERING
Address of Applicant :ASSOCIATE PROFESSOR, DEPARTMENT OF MECHANICAL ENGINEERING, SSN COLLEGE OF ENGINEERING, RAJIV GANDHI SALAI, KALAVAKKAM - 603 110 Tamil Nadu India
(72)**Name of Inventor :**
1)SUBASH SRIRAM
2)GOKULRAM PARANJOTHI
3)KESHIKA VASUDEVAN
4)PRAVEEN SAMPATH

(57) Abstract :
The device disclosed herein is an apparatus used to simultaneously generate hot and cold air streams from a single stream of compressed air. The apparatus is based on the vortex tube principle and has no moving parts. A nozzle is used to setup the vortex flow and the separate streams are obtained mutually perpendicular to the inlet stream and themselves. The device is portable and is hand held. The hot and cold streams obtained can be used ideally for home applications focusing on small scale cooling/heating and cleaning

No. of Pages : 7 No. of Claims : 6

(12) PATENT APPLICATION PUBLICATION
(19) INDIA
(22) Date of filing of Application :30/10/2013
(21) Application No.4885/CHE/2013 A
(43) Publication Date : 08/05/2015

(54) Title of the invention : TOUCH INPUT BASED SYSTEM FOR VIDEOX-RAY DEVICE

(51) International classification :G06F3/00
(31) Priority Document No :NA
(32) Priority Date :NA
(33) Name of priority country :NA
(86) International Application No :NA
Filing Date :NA
(87) International Publication No : NA
(61) Patent of Addition to Application Number :NA
Filing Date :NA
(62) Divisional to Application Number :NA
Filing Date :NA

(71)**Name of Applicant :**
1)GENERAL ELECTRIC COMPANY
Address of Applicant :1 RIVER ROAD, SCHENECTADY, NEW YORK 12345 U.S.A.
(72)**Name of Inventor :**
1)PRASAD, ADITYA NARASIMHA
2)KONDURU, VAMSIDHAR

(57) Abstract :
A control system for controlling operations of a video x-ray device capable of capturing medical images of a subject is disclosed. The control system comprises a touch input display and a computing device communicably connected to the touch input display. The computing device is configured to receive user inputs through the touch input display, and perform a plurality of operations in the video x-ray device with respect to a subject based on the user inputs received through the touch input display.

No. of Pages : 31 No. of Claims : 15

(12) PATENT APPLICATION PUBLICATION
(21) Application No.4980/CHE/2013 A
(19) INDIA
(22) Date of filing of Application :04/11/2013
(43) Publication Date : 08/05/2015

(54) Title of the invention : A COMPOSITION COMPRISING OF A XANTHONOID AND A FLAVONOID AND USES THEREOF

(51) International classification :A61K31/075
(31) Priority Document No :NA
(32) Priority Date :NA
(33) Name of priority country :NA
(86) International Application No :NA
Filing Date :NA
(87) International Publication No : NA
(61) Patent of Addition to Application Number :NA
Filing Date :NA
(62) Divisional to Application Number :NA
Filing Date :NA

(71)**Name of Applicant :**
1)ITC LIMITED
Address of Applicant :ITC LIFE SCIENCES AND TECHNOLOGY CENTER #3, 1st Main, Peenya Industrial Area, Phase 1, Bangalore 560 058, Uttar Pradesh India
(72)**Name of Inventor :**
1)RADHAKRISHNAN, Yashwanth
2)DEVAN, Sabarinathan
3)KS, NandaKumar

(57) Abstract :
The present disclosure relates to a composition and methods for management of Type 2 Diabetes Mellitus comprising a xanthonoid, and a flavonoid. Further, the present disclosure relates to food supplements comprising of said composition for the management of Type 2 Diabetes Mellitus.

No. of Pages : 20 No. of Claims : 8

(12) PATENT APPLICATION PUBLICATION
(19) INDIA
(22) Date of filing of Application :25/02/2014
(21) Application No.949/CHE/2014 A
(43) Publication Date : 08/05/2015

(54) Title of the invention : IDENTIFYING CONTEXTUAL RESULTS WITHIN ASSOCIATIVE MEMORY

(51) International classification :G06F
(31) Priority Document No :13/861,369
(32) Priority Date :11/04/2013
(33) Name of priority country :U.S.A.
(86) International Application No :NA
Filing Date :NA
(87) International Publication No : NA
(61) Patent of Addition to Application Number :NA
Filing Date :NA
(62) Divisional to Application Number :NA
Filing Date :NA

(71)**Name of Applicant :**
1)THE BOEING COMPANY
Address of Applicant :100 North Riverside Plaza, Chicago, Illinois 60606-2016, U.S.A.
(72)**Name of Inventor :**
1)JOHN DESMOND WHELAN
2)HARRY ELDRIDGE STOVALL, III

(57) Abstract :
A system including an associative memory (402, 1528) and an input device (414) configured to receive a first query (102) or comparison request (416). The associative memory (402, 1528) is configured to: responsive to receiving the first query (102) or comparison request (416), locate an entity value (418) having an attribute value (420) matching a term (422) of the first query (102) or comparison request (416); responsive to locating the entity value (418), return a first list of results (424) including the entity value (418); add, as a required search term (422), at least one of first results from the first list to a second query (102) or comparison request, the second query (102) or comparison request further including all terms of the first query (102) or comparison request (416); perform the second query (102) or comparison request and, as a result, return a second list of resource references (428); use the second list to retrieve source data (430); combine the entity value (418) with the source data (430) to form a combination (432); and return the combination (432).

No. of Pages : 58 No. of Claims : 15

(12) PATENT APPLICATION PUBLICATION
(19) INDIA
(22) Date of filing of Application :06/11/2013
(21) Application No.4990/CHE/2013 A
(43) Publication Date : 08/05/2015

(54) Title of the invention : A METHOD AND SYSTEM FOR HANDLING AUDIO PACKETS DURING A VOLTE CALL

(51) International classification :G08B
(31) Priority Document No :NA
(32) Priority Date :NA
(33) Name of priority country :NA
(86) International Application No :NA
Filing Date :NA
(87) International Publication No : NA
(61) Patent of Addition to Application Number :NA
Filing Date :NA
(62) Divisional to Application Number :NA
Filing Date :NA

(71)**Name of Applicant :**
1)Samsung R & D Institute India- Bangalore Private Limited
Address of Applicant :# 2870, Orion Building, Bagmane Constellation Business Park, Outer Ring Road, Doddanekundi Circle, Marathahalli Post, Bangalore Karnataka India
(72)**Name of Inventor :**
1)Praveen Chebolu
2)Harsh Maheshchand Kothari
3)Ganesh Babu Kamma
4)Ajay Kumar kabadi
5)Shaik Abdulla

(57) Abstract :
A method and system for handling audio packets in a VoLTE call by a User Equipment (UE) when ROHC is enabled is provided. The TCP/IP layer provides the VoLTE call properties to the ROHC compressor. The TCP/IP layer receives the audio packets from audio engine and sends the RTP packets directly to ROHC compressor. Further, the ROHC compressor compresses the IP/UDP headers and RTP header. The ROHC compressor sends the compressed RTP data along with payload to the network in the UpLink data path. During DownLink data path, ROHC decompressor receives compressed ROHC packet from network. The ROHC decompressor ignores the construction of IP/UDP headers for compressed data. The ROHC decompressor constructs RTP header and RTP payload and sends the RTP header and RTP payload to the TCP/IP layer. The TCP/IP layer ignores validation of IP/UDP headers and sends the RTP packets to audio engine.

No. of Pages : 33 No. of Claims : 13

(12) PATENT APPLICATION PUBLICATION
(21) Application No.4993/CHE/2013 A
(19) INDIA
(22) Date of filing of Application :06/11/2013
(43) Publication Date : 08/05/2015

(54) Title of the invention : 'LACTAL' A PRODUCT INVENTED TO TREAT TANNERY EFFLUENT

(51) International classification :C02F
(31) Priority Document No :NA
(32) Priority Date :NA
(33) Name of priority country :NA
(86) International Application No :NA
Filing Date :NA
(87) International Publication No : NA
(61) Patent of Addition to Application Number :NA
Filing Date :NA
(62) Divisional to Application Number :NA
Filing Date :NA

(71)**Name of Applicant :**
1)DR. JAYASREE. R
Address of Applicant :PROFESSOR, DEPARTMENT OF BIOTECHNOLOGY, RAJALAKSHMI ENGINEERING COLLEGE, RAJALAKSHMI NAGAR, THANDALAM, CHENNAI - 602 105 Tamil Nadu India
(72)**Name of Inventor :**
1)DR. JAYASREE. R

(57) Abstract :
The effect of effluents from tanning industry and its toxicity on various living organisms like fishes, plants and microbes in and around the environment has a great impact. The damage to the environment by the hazardous tannery effluent is becoming an acute problem in the country. Tannery wastewaters are mainly characterized by high salinity, high organic loading and specific pollutants such as chromium, strong color (reddish dull brown), high BOD, high pH, high dissolved solids etc .Heavy metals like cadmium, chromium, lead, zinc, etc., are present in the tannery effluent .The excess quantity of these metals along with other tannery wastes are toxic to the environment. This invention relates to a herbal extract to treat the tannery effluent. The product sediments various contents of the tannery effluent and lowers the suspended solids and clarifies the effluent. All the physical and chemical parameters can be improved by this treatment.

No. of Pages : 5 No. of Claims : 1

(12) PATENT APPLICATION PUBLICATION
(19) INDIA
(22) Date of filing of Application :23/02/2014
(21) Application No.886/CHE/2014 A
(43) Publication Date : 08/05/2015

(54) Title of the invention : SYSTEMS AND TECHNIQUES FOR HEATING UREA INJECTION SYSTEMS

(51) International classification :F01N
(31) Priority Document No :13/782,061
(32) Priority Date :01/03/2013
(33) Name of priority country :U.S.A.
(86) International Application No :NA
Filing Date :NA
(87) International Publication No : NA
(61) Patent of Addition to Application Number :NA
Filing Date :NA
(62) Divisional to Application Number :NA
Filing Date :NA

(71)**Name of Applicant :**
1)CUMMINS EMISSION SOLUTIONS INC.
Address of Applicant :500 Jackson Street, Indianapolis, Indiana 47201, United States Of America
(72)**Name of Inventor :**
1)ANDREW MYER
2)JOHN HEICHELBECH
3)STEPHANIE APEWOKIN
4)STEPHEN HOLL
5)JAMES F. BURKE

(57) Abstract :
A reductant delivery system is provided for delivery of reductant to an engine exhaust after treatment system that is heated during cold temperature conditions. A heat exchange fluid flows through a heat exchange circuit that provides a flow path from the heat source to the doser, from the doser to the reductant storage tank, and from the reductant storage tank to the heat source. A control valve controls the flow of the heat exchange fluid in the heat exchange circuit so that at least one heat exchange cycle includes a circulation period that increases the temperature of the reductant in the doser and storage tank and a termination period where circulation is stopped until reductant temperature in the doser reaches a lower limit.

No. of Pages : 29 No. of Claims : 20

(12) PATENT APPLICATION PUBLICATION
(19) INDIA
(22) Date of filing of Application :26/02/2014
(21) Application No.954/CHE/2014 A
(43) Publication Date : 08/05/2015

(54) Title of the invention : A PARALLEL HARDWARE SEARCHING SYSTEM FOR BUILDING ARTIFICIAL INTELLIGENT COMPUTER

(51) International classification	:G06F 17/00
(31) Priority Document No	:102136037
(32) Priority Date	:04/10/2013
(33) Name of priority country	:Taiwan
(86) International Application No	:NA
Filing Date	:NA
(87) International Publication No	: NA
(61) Patent of Addition to Application Number	:NA
Filing Date	:NA
(62) Divisional to Application Number	:NA
Filing Date	:NA

(71)**Name of Applicant :**
1)Koutin Technology Inc. LTD
Address of Applicant :2F-1, No.10 Daren St, Sanchong Dist, New Taipei City 241, Taiwan (R.O.C.) Taiwan
(72)**Name of Inventor :**
1)SHU, WEN-LUNG

(57) Abstract :
An affordable artificial intelligent (AI) computer is invented by combining present computer with a parallel hardware search system. Such a computer can be treated as a Turing Machine. Instead of sequentially processing computer instructions, this computer executes AI logic reasoning. The parallel hardware search system use pure parallel hardware to execute virtual B-tree search. Hierarchical page table and hash techniques are also used for very large data volume. The prototype of this invented system is successfully built into a PCIE card which mainly contains a Xilinxs Kintex7 FPGA chip and two DDR3 memory modules. FPGA chip includes: 32 32-bit processing units (PUs), one PCIE controller, one search/delete/insert controller and two DDR3 controllers.

No. of Pages : 21 No. of Claims : 9

(12) PATENT APPLICATION PUBLICATION
(21) Application No.5000/CHE/2013 A
(19) INDIA
(22) Date of filing of Application :06/11/2013
(43) Publication Date : 08/05/2015

(54) Title of the invention : A DEVICE FOR HEATING A STORAGE TANK, A DEVICE FOR COOLING A DOSING MODULE, AND A SCR SYSTEM

(51) International classification :F01N3/10
(31) Priority Document No :NA
(32) Priority Date :NA
(33) Name of priority country :NA
(86) International Application No :NA
Filing Date :NA
(87) International Publication No : NA
(61) Patent of Addition to Application Number :NA
Filing Date :NA
(62) Divisional to Application Number :NA
Filing Date :NA

(71)**Name of Applicant :**
1)Robert Bosch Engineering and Business Solutions Limited
Address of Applicant :123, Industrial Layout, Hosur Road, Koramangala, Bangalore 560095, Karnataka, INDIA
2)Robert Bosch GmbH
(72)**Name of Inventor :**
1)BANDARI Ravinder

(57) Abstract :
The various embodiments of the present invention provide a device for heating a storage tank 108 of a Selective Catalytic Reduction (SCR) system and a device for cooling a dosing module 105. The SCR system comprises a flow path 104 adapted to carry a reducing agent 109 from the storage tank 108 to the dosing module 105. The device comprises a vortex tube 110 comprising an inlet 101, a hot end 102 and a cold end 111. The inlet 101 of the vortex tube 110 receives the compressed fluid from a source. A heating circuit channel 103 connected to the hot end 102 of the vortex tube 110 is adapted to transfer heat to the reducing agent 109. Also, a cooling circuit channel 201 from the cold end 111 of the vortex tube 110 is directed to cool the dosing module 105.

No. of Pages : 14 No. of Claims : 9

(12) PATENT APPLICATION PUBLICATION
(21) Application No.5001/CHE/2013 A
(19) INDIA
(22) Date of filing of Application :06/11/2013
(43) Publication Date : 08/05/2015

(54) Title of the invention : A COPY PROTECTION SCHEME FOR DIGITAL AUDIO AND VIDEO CONTENT AUTHENTICATED HDCP RECEIVERS

(51) International classification :H04L9/00
(31) Priority Document No :NA
(32) Priority Date :NA
(33) Name of priority country :NA
(86) International Application No :NA
Filing Date :NA
(87) International Publication No : NA
(61) Patent of Addition to Application Number :NA
Filing Date :NA
(62) Divisional to Application Number :NA
Filing Date :NA

(71)**Name of Applicant :**
1)REAL IMAGE MEDIA TECHNOLOGIES PVT. LTD.
Address of Applicant :7B THIRD STREET, BALAJINAGAR, CHENNAI 600 014 Tamil Nadu India
(72)**Name of Inventor :**
1)RAJESH RAMACHANDRAN
2)SENTHIL KUMAR

(57) Abstract :
A method of delivering digital audio and video content and a HDCP source device are disclosed herein. In one embodiment the method includes: (1) receiving an encryption key from a potential receiver of the digital audio and video content, (2) authenticating the potential receiver is an HDCP compliant device and (3) in addition to the authenticating, verifying the potential receiver is a trusted device for receiving the digital audio and video content.

No. of Pages : 23 No. of Claims : 19

(12) PATENT APPLICATION PUBLICATION
(19) INDIA
(22) Date of filing of Application :06/11/2013
(21) Application No.5004/CHE/2013 A
(43) Publication Date : 08/05/2015

(54) Title of the invention : A METHOD FOR MARKING READ ONLY REGION IN BROWSER OF ELECTRONIC DEVICE

(51) International classification :G06F
(31) Priority Document No :NA
(32) Priority Date :NA
(33) Name of priority country :NA
(86) International Application No :NA
Filing Date :NA
(87) International Publication No : NA
(61) Patent of Addition to Application Number :NA
Filing Date :NA
(62) Divisional to Application Number :NA
Filing Date :NA

(71)**Name of Applicant :**
1)Samsung R & D Institute India- Bangalore Private Limited
Address of Applicant :# 2870, Orion Building, Bagmane Constellation Business Park, Outer Ring Road, Doddanekundi Circle, Marathahalli Post, Bangalore Karnataka India
(72)**Name of Inventor :**
1)Shyamakshi Ghosh

(57) Abstract :
A method for marking read only region in a browser of electronic device is proposed. A selection tool in the web browser allows users to select a read only region in the webpage. The read only region does not accept any user input. The read only region can be edited using edit options present in the selection tool. Special user interface controls in the web browser relocate any invoked pop-up.

No. of Pages : 26 No. of Claims : 13

(12) PATENT APPLICATION PUBLICATION
(21) Application No.923/CHE/2014 A
(19) INDIA
(22) Date of filing of Application :24/02/2014
(43) Publication Date : 08/05/2015

(54) Title of the invention : AVOIDING RESTART ON ERROR IN DATA INTEGRATION

(51) International classification :G11B
(31) Priority Document No :13/803,442
(32) Priority Date :14/03/2013
(33) Name of priority country :U.S.A.
(86) International Application No :NA
Filing Date :NA
(87) International Publication No : NA
(61) Patent of Addition to Application Number :NA
Filing Date :NA
(62) Divisional to Application Number :NA
Filing Date :NA

(71)**Name of Applicant :**
1)International Business Machines Corporation
Address of Applicant :New Orchard Road, Armonk, New York 10504, USA U.S.A.
(72)**Name of Inventor :**
1)Sastry V. Kota
2)Srinivas K. Mittapalli

(57) Abstract :
According to one embodiment of the present invention, a system avoids restart on an error in a data integration process. The system processes data received from a data source in accordance with a parallel processing pipeline and partitioning scheme and submits said processed data to a destination. In response to an indication of an error, the system pauses receiving of data and saves unprocessed data received from the source. After correction of the error, the system resumes processing of the received and saved data in an order of the parallel processing pipeline and partitioning scheme. Embodiments of the present invention further include a method and computer program product for avoiding restart on an error in a data integration process in substantially the same manners described above.

No. of Pages : 26 No. of Claims : 24

(12) PATENT APPLICATION PUBLICATION
(19) INDIA
(22) Date of filing of Application :26/02/2014
(21) Application No.978/CHE/2014 A
(43) Publication Date : 08/05/2015

(54) Title of the invention : ROBUST AND HIGH PERFORMANCE INSTRUCTIONS FOR SYSTEM CALL

(51) International classification :G06C
(31) Priority Document No :13/837,878
(32) Priority Date :15/03/2013
(33) Name of priority country :U.S.A.
(86) International Application No :NA
Filing Date :NA
(87) International Publication No : NA
(61) Patent of Addition to Application Number :NA
Filing Date :NA
(62) Divisional to Application Number :NA
Filing Date :NA

(71)**Name of Applicant :**
1)INTEL CORPORATION
Address of Applicant :2200 MISSION COLLEGE, BOULEVARD, M/S: RNB-4-150, SANTA CLARA, CALIFORNIA, 95054, USA. U.S.A.
(72)**Name of Inventor :**
1)Baiju V. PATEL
2)James B. CROSSLAND
3)Atul A, KHARE
4)Toby OPFERMAN

(57) Abstract :
Robust system call and system return instructions are executed by a processor to transfer control between a requester and an operating system kernel. The processor includes execution circuitry and registers that store pointers to data structures in memory. The execution circuitry receives a system call instruction from a requester to transfer control from a first privilege level of the requester to a second privilege level of an operating system kernel. In response, the execution circuitry swaps the data structures that are pointed to by the registers between the requester and the operating system kernel in one atomic transition.

No. of Pages : 44 No. of Claims : 20

(12) PATENT APPLICATION PUBLICATION
(19) INDIA
(22) Date of filing of Application :28/02/2014
(21) Application No.1031/CHE/2014 A
(43) Publication Date : 08/05/2015

(54) Title of the invention : USER INTERFACE AND METHOD

(51) International classification :H04L
(31) Priority Document No :13/783,507
(32) Priority Date :04/03/2013
(33) Name of priority country :U.S.A.
(86) International Application No :NA
Filing Date :NA
(87) International Publication No : NA
(61) Patent of Addition to Application Number :NA
Filing Date :NA
(62) Divisional to Application Number :NA
Filing Date :NA

(71)**Name of Applicant :**
1)HONEYWELL INTERNATIONAL INC.
Address of Applicant :101 Columbia Road, P.O. Box 2245, Morristown, N.J. 07962-2245, USA U.S.A.
(72)**Name of Inventor :**
1)KAMAL KANNAN
2)MANIKANDAN RAMASWAMI

(57) Abstract :
A user interface method can include providing an object to be controlled, providing a remote control device, capturing an image of the object, using the image of the object to recognize the object, and based on recognition of the object, displaying a second user interface on the viewing screen of the remote control device, wherein the second user interface is substantially identical to a first user interface of the object. A user interface method can also include providing an object to be controlled, providing a remote control device, focusing an image capturing device of the remote control device on the object, identifying coordinates, identifying the object as being associated with the identified coordinates, and based on identifying the object, displaying a second user interface on the viewing screen of the remote control device, wherein the second user interface is substantially identical to a first user interface of the object.

No. of Pages : 20 No. of Claims : 15

(12) PATENT APPLICATION PUBLICATION
(19) INDIA
(22) Date of filing of Application :21/02/2014
(21) Application No.867/CHE/2014 A
(43) Publication Date : 08/05/2015

(54) Title of the invention : ELASTIC JUNCTION FOR SLIDING BLOCK ADAPTER

(51) International classification :B21B
(31) Priority Document No :MI2013A000287
(32) Priority Date :27/02/2013
(33) Name of priority country :Italy
(86) International Application No :NA
Filing Date :NA
(87) International Publication No : NA
(61) Patent of Addition to Application Number :NA
Filing Date :NA
(62) Divisional to Application Number :NA
Filing Date :NA

(71)**Name of Applicant :**
1)DANIELI & C. OFFICINE MECCANICHE, S.P.A.
Address of Applicant :VIA NAZIONALE 41, I-33042 BUTTRIO Italy
(72)**Name of Inventor :**
1)DONADON, ANDREA

(57) Abstract :
The elastic junction for the dynamic connection between the motor side and the head of a sliding block adapter, or between adapter and rolls of a rolling plant, comprises a central pin (5) arranged perpendicular to the longitudinal axis of the adapter (3), multiple sliding blocks (4) connected by means of the pin (5) to the adapter (3), a block (1) fixed to the flange (2) and two interfaced and complementary series of dampers (6) connected to the pin (5). This ensures the reduction of the axial tensions which are transmitted along the adapter in response to stresses caused by rolling.

No. of Pages : 14 No. of Claims : 8

(12) PATENT APPLICATION PUBLICATION
(19) INDIA
(22) Date of filing of Application :23/02/2014
(21) Application No.885/CHE/2014 A
(43) Publication Date : 08/05/2015

(54) Title of the invention : SYSTEMS AND TECHNIQUES FOR HEATING UREA INJECTION SYSTEMS

(51) International classification :F01N
(31) Priority Document No :13/782,017
(32) Priority Date :01/03/2013
(33) Name of priority country :U.S.A.
(86) International Application No :NA
Filing Date :NA
(87) International Publication No : NA
(61) Patent of Addition to Application Number :NA
Filing Date :NA
(62) Divisional to Application Number :NA
Filing Date :NA

(71)**Name of Applicant :**
1)CUMMINS EMISSION SOLUTIONS, INC.
Address of Applicant :500, Jackson Street, Indianapolis, Indiana 47201, United States of America
(72)**Name of Inventor :**
1)MUGDHA NAIK
2)YONGQUAN CHAI
3)SHU ZHANG
4)XIN JIN
5)SRIVARDHAN CHANDRAPATI
6)JAMES HOUGHTELL
7)DEEPU J. CHANDY

(57) Abstract :
A reductant delivery system is provided for delivery of reductant to an engine exhaust aftertreatment system that is heated during cold temperature conditions. A heat exchange fluid flows through a heat exchange circuit that provides a flow path from the heat source to the doser, from the doser to the reductant storage tank, and from the reductant storage tank to the heat source. A control valve controls the flow of the heat exchange fluid in the heat exchange circuit so that at least one heat exchange cycle includes a circulation period that increases the temperature of the reductant in the doser and storage tank and a termination period where circulation is stopped until reductant temperature in the doser reaches a lower limit.

No. of Pages : 30 No. of Claims : 20

(12) PATENT APPLICATION PUBLICATION
(19) INDIA
(22) Date of filing of Application :25/02/2014
(21) Application No.953/CHE/2014 A
(43) Publication Date : 08/05/2015

(54) Title of the invention : SYSTEMS, APPARATUSES, AND METHODS FOR ZEROING OFBITS IN A DATA ELEMENT

(51) International classification :G06C
(31) Priority Document No :13/840,669
(32) Priority Date :15/03/2013
(33) Name of priority country :U.S.A.
(86) International Application No :NA
Filing Date :NA
(87) International Publication No : NA
(61) Patent of Addition to Application Number :NA
Filing Date :NA
(62) Divisional to Application Number :NA
Filing Date :NA

(71)**Name of Applicant :**
1)Intel Corporation
Address of Applicant :2200 MISSION COLLEGE BOULEVARD, M/S: RNB-4-150, SANTA CLARA, CALIFORNIA 95054, UNITED STATES OF AMERICA..
(72)**Name of Inventor :**
1)Elmoustapha OULD-AHMED-VALL
2)Robert VALENTINE

(57) Abstract :
Embodiments of systems, methods and apparatuses for execution a NAME instruction are described. The execution of a VPBZHI causes, on a per data element basis of a second source, a zeroing of bits higher (more significant) than a starting point in the data element. The starting point is defined by the contents of a data element in a first source. The resultant data elements are stored in a corresponding data element position of a destination.

No. of Pages : 49 No. of Claims : 20

(12) PATENT APPLICATION PUBLICATION
(19) INDIA
(22) Date of filing of Application :28/02/2014
(21) Application No.1632/CHENP/2014 A
(43) Publication Date : 08/05/2015

(54) Title of the invention : DEVICE FOR IMPROVING COMPATIBILITY OF SOLID STATE LIGHT SOURCES WITH PHASE CUT DIMMERS

(51) International classification :H01R
(31) Priority Document No :61/531167
(32) Priority Date :06/09/2011
(33) Name of priority country :U.S.A.
(86) International Application No :PCT/IB2012/054597
Filing Date :06/09/2012
(87) International Publication No :WO 2013/035055
(61) Patent of Addition to Application Number :NA
Filing Date :NA
(62) Divisional to Application Number :NA
Filing Date :NA

(71)**Name of Applicant :**
1)KONINKLIJKE PHILIPS N.V.
Address of Applicant :High Tech Campus 5 NL 5656 AE Eindhoven Netherlands
(72)**Name of Inventor :**
1)GAINES James M.
2)MAYO H. Andrew
3)HONTEL‰ Bertrand Johan Edward

(57) Abstract :
A device suppresses flicker and improves compatibility of a lamp including at least one solid state light source the lamp being operably connected to a control circuit such as a dimmer circuit. The device includes a connector enabling connection of the solid state light source to a lamp socket configured to receive an incandescent light source and an adapter circuit connected in parallel with the at least one solid state light source when the solid state light source is connected to the socket via the connector. The adapter circuit provides a resistive path for current to pass through the lamp during all or part of the AC mains cycle.

No. of Pages : 39 No. of Claims : 18

(12) PATENT APPLICATION PUBLICATION
(21) Application No.4910/CHE/2013 A
(19) INDIA
(22) Date of filing of Application :31/10/2013
(43) Publication Date : 08/05/2015

(54) Title of the invention : PASSIVE COOLING BASED SECONDARY CONCENTRATOR FOR SOLAR CONCENTRATING PHOTOVOLTAIC (CPV) SYSTEM FOR UNIFORM FLUX DISTRIBUTION AND EFFECTIVE COOLING

(51) International classification :H01L31/00
(31) Priority Document No :NA
(32) Priority Date :NA
(33) Name of priority country :NA
(86) International Application No :NA
Filing Date :NA
(87) International Publication No : NA
(61) Patent of Addition to Application Number :NA
Filing Date :NA
(62) Divisional to Application Number :NA
Filing Date :NA

(71)**Name of Applicant :**
1)INDIAN INSTITUTE OF TECHNOLOGY MADRAS
Address of Applicant :IIT P.O, CHENNAI 600 036 Tamil Nadu India
(72)**Name of Inventor :**
1)DR. K, SRINIVAS REDDY

(57) Abstract :
The invention relates to a solar concentrating photovoltaic system having specifically an active system and a passive system along with reflective and refractive means based on optical elements. With this system there is a primary concentrator, a secondary concentrator and a junction cell whereby fresenel lens can be used as primary concentrator, compound parabolic collector may be used as secondary concentrator and a lll-V triple-junction along with an optical homogenizer which enables an extraction of synergy from entire solar spectrum.

No. of Pages : 6 No. of Claims : 1

(12) PATENT APPLICATION PUBLICATION
(19) INDIA
(22) Date of filing of Application :07/11/2013
(21) Application No.5013/CHE/2013 A
(43) Publication Date : 08/05/2015

(54) Title of the invention : SYSTEMS AND METHODS FOR PROTECTING VIRTUALIZED ASSETS

(51) International classification :G06Q40/08
(31) Priority Document No :NA
(32) Priority Date :NA
(33) Name of priority country :NA
(86) International Application No :NA
Filing Date :NA
(87) International Publication No : NA
(61) Patent of Addition to Application Number :NA
Filing Date :NA
(62) Divisional to Application Number :NA
Filing Date :NA

(71)**Name of Applicant :**
1)SCHNEIDER ELECTRIC IT CORPORATION
Address of Applicant :132 Fairgrounds Road, West Kingston, Rhode Island 02892, United States of America
(72)**Name of Inventor :**
1)GREHAN, DAVID
2)HANNON, SARAH J.
3)KAMMINGA, FRED
4)PORTER, PAULA
5)KHATOR AMIT KUMAR

(57) Abstract :
According to various aspects and embodiments, a power management system configured to protect a plurality of information technology (IT) assets is provided. The system includes a migration component executable by the at least one processor and configured to identify the plurality of IT assets, the plurality of IT assets including at least one power supply unit and at least one host server, generate an association between at least one IT asset and at least one power supply unit, receive a power-related event from the at least one power supply unit, correlate the power-related event with at least one affected IT asset based on the generated association, determine a sequence of actions, wherein the sequence of actions is configured to migrate at least one virtual machine from the at least one affected IT asset to a non-affected asset, and execute the sequence of actions.

No. of Pages : 44 No. of Claims : 20

(12) PATENT APPLICATION PUBLICATION
(19) INDIA
(22) Date of filing of Application :07/11/2013
(21) Application No.5021/CHE/2013 A
(43) Publication Date : 08/05/2015

(54) Title of the invention : INDUCTION HEATING DEVICE

(51) International classification :H01L
(31) Priority Document No :NA
(32) Priority Date :NA
(33) Name of priority country :NA
(86) International Application No :NA
Filing Date :NA
(87) International Publication No : NA
(61) Patent of Addition to Application Number :NA
Filing Date :NA
(62) Divisional to Application Number :NA
Filing Date :NA

(71)**Name of Applicant :**
1)GENERAL ELECTRIC COMPANY, A NEW YORK CORPORATION
Address of Applicant :1 RIVER ROAD, SCHENECTADY, NEW YORK 12345 U.S.A.
(72)**Name of Inventor :**
1)BHAT. SUMA MEMANA NARAYANA
2)BICKNELL, WILLIAM HULL
3)BOHORI, ADNAN KUTUBUDDIN
4)SHAN, MINGWEI
5)RAGHUNATHAN, ARUN KUMAR

(57) Abstract :
An induction heating device is provided. The induction heating device includes a coil comprising a plurality of coil sections wherein each of the plurality of coil section includes a plurality of windings, wherein each of the plurality of coil sections is placed coaxially with respect to each other and the plurality of coil sections are stacked vertically with radiuses of the plurality of coil sections reducing progressively in an upward direction or a downward direction.

No. of Pages : 23 No. of Claims : 20

(12) PATENT APPLICATION PUBLICATION
(19) INDIA
(22) Date of filing of Application :07/11/2013
(21) Application No.5025/CHE/2013 A
(43) Publication Date : 08/05/2015

(54) Title of the invention : METHOD AND SYSTEM FOR ANOMALY DETECTION IN A DISTRIBUTED CONTROL SYSTEM

(51) International classification :H04B
(31) Priority Document No :NA
(32) Priority Date :NA
(33) Name of priority country :NA
(86) International Application No :NA
Filing Date :NA
(87) International Publication No : NA
(61) Patent of Addition to Application Number :NA
Filing Date :NA
(62) Divisional to Application Number :NA
Filing Date :NA

(71)**Name of Applicant :**
1)ABB TECHNOLOGY LTD.
Address of Applicant :AFFOTERNSTRASSES 44, CH-8050, ZURICH Switzerland
(72)**Name of Inventor :**
1)ABHILASH G
2)ABHINNA BISWAL
3)ARUN PARMAR
4)JITHIN K.P.
5)JIM LEMANOWICZ

(57) Abstract :
A computer implementable anomaly detection method and system for a DCS (Distributed Control System) is provided. The method comprises steps of setting up a communication configuration on a system monitoring component, creating a security system topology in the system component, creating allowed lists for addresses, applications, communication paths, zones and protocols, monitoring user and data activity, generating anomaly user event response or anomaly data event response on any non conformance and analyzing these to generate a system level anomaly and associating risk levels and raising an alarm accordingly. The method is implemented using distributed components thus incorporating a distributed intelligence for the security of the DCS.

No. of Pages : 16 No. of Claims : 10

(12) PATENT APPLICATION PUBLICATION
(21) Application No.5026/CHE/2013 A
(19) INDIA
(22) Date of filing of Application :07/11/2013
(43) Publication Date : 08/05/2015

(54) Title of the invention : METHODS FOR EFFICIENT ASSIGNMENT OF VEHICLES AND ROUTING THEREFOR, AND SYSTEMS THEREFROM

(51) International classification :A22C
(31) Priority Document No :NA
(32) Priority Date :NA
(33) Name of priority country :NA
(86) International Application No :NA
Filing Date :NA
(87) International Publication No : NA
(61) Patent of Addition to Application Number :NA
Filing Date :NA
(62) Divisional to Application Number :NA
Filing Date :NA

(71)**Name of Applicant :**
1)SRIRAM KANNAN
Address of Applicant :GM-04, KEERTHI ROYALE, NO. 3, OUTER RING ROAD, BANASWADI, BANGALORE Karnataka India
(72)**Name of Inventor :**
1)SRIRAM KANNAN
2)SAI ANAND
3)SHANKAR NAGARAJAN

(57) Abstract :
In one aspect, the invention provides an efficient method for vehicle assignment while ensuring that any constraints associated with the assignment are met unequivocally. Exemplary constraints include maximum vehicle occupancy, minimum vehicle occupancy, a maximum distance travelled by an individual from their location to a pick-up location, and so on. The method involves defining an area and dividing the area into sub-regions, and subsequently assigning vehicles to each individual within each sub-region. The method then involves identifying excess vehicles and optimizing vehicle utilization. Subsequently, the vehicles are then routed along a path that includes the assigned individuals. The method of the invention can be extended to dropping off passengers from a central location; picking up and dropping off of packages, and even assignment and routing of packets in a telecommunication network. The invention also provides a tool and system based on the method of the invention.

No. of Pages : 20 No. of Claims : 9

(12) PATENT APPLICATION PUBLICATION
(19) INDIA
(22) Date of filing of Application :21/02/2014
(21) Application No.873/CHE/2014 A
(43) Publication Date : 08/05/2015

(54) Title of the invention : PROVIDING A CURSOR IN ELECTRONIC DEVICES

(51) International classification	:A61N
(31) Priority Document No	:10-2013-0019458
(32) Priority Date	:22/02/2013
(33) Name of priority country	:Republic of Korea
(86) International Application No	:NA
Filing Date	:NA
(87) International Publication No	: NA
(61) Patent of Addition to Application Number	:NA
Filing Date	:NA
(62) Divisional to Application Number	:NA
Filing Date	:NA

(71)**Name of Applicant :**
1)SAMSUNG ELECTRONICS CO., LTD.
Address of Applicant :129, Samsung-ro, Yeongtong-gu, Suwon-si, Gyeonggi-do, 443-742, Republic of Korea.
(72)**Name of Inventor :**
1)Seog-Hee JEONG
2)Haeng-Jin SHIN
3)Min-Kyung LIM
4)Young-Keun CHOI
5)Hyung-Suk HWANG

(57) Abstract :
An apparatus is provided including a controller configured to: detect whether a displayed object is an icon; detect whether a cursor is located inside an area surrounding the displayed object, when the displayed object is the icon; move the cursor to a first location within the displayed object, when the cursor is located inside the area; and hold the cursor still after the cursor is moved to the first location, wherein the cursor is held still for a waiting time period.

No. of Pages : 75 No. of Claims : 37

(12) PATENT APPLICATION PUBLICATION
(21) Application No.1466/CHENP/2014 A
(19) INDIA
(22) Date of filing of Application :24/02/2014
(43) Publication Date : 08/05/2015

(54) Title of the invention : ANTI HUMAN XCR1 ANTIBODIES

(51) International classification :C07K16/28,A61P37/00
(31) Priority Document No :61/530194
(32) Priority Date :01/09/2011
(33) Name of priority country :U.S.A.
(86) International Application No :PCT/JP2012/072667
Filing Date :30/08/2012
(87) International Publication No :WO 2013/032032
(61) Patent of Addition to Application Number :NA
Filing Date :NA
(62) Divisional to Application Number :NA
Filing Date :NA

(71)**Name of Applicant :**
1)EISAI R&D MANAGEMENT CO. LTD.
Address of Applicant :6 10 Koishikawa 4 chome Bunkyo ku Tokyo 1128088 Japan
(72)**Name of Inventor :**
1)SAKAMOTO Yoshimasa
2)NISHIMURA Miyuki
3)KAWANO Tetsu
4)SAWA Yukihisa
5)IMAI Toshio

(57) Abstract :
An object of the present invention is to provide a monoclonal antibody binding to human XCR1 wherein the antibody binds to linear or discontinuous epitopes which comprise at least three amino acids selected from the group consisting of the 8th 11th 12th 13th 14th 16th 17th 22nd 23rd 176th and 177th amino acids in the amino acid sequence of SEQ ID NO: 91.

No. of Pages : 172 No. of Claims : 27

(12) PATENT APPLICATION PUBLICATION
(19) INDIA
(22) Date of filing of Application :26/02/2014
(21) Application No.957/CHE/2014 A
(43) Publication Date : 08/05/2015

(54) Title of the invention : APPARATUS, METHOD, AND SYSTEM FOR REDUCTANT FILTRATION

(51) International classification :F01N
(31) Priority Document No :CUMMINS IP, INC.
(32) Priority Date :14/03/2013
(33) Name of priority country :U.S.A.
(86) International Application No :NA
Filing Date :NA
(87) International Publication No : NA
(61) Patent of Addition to Application Number :NA
Filing Date :NA
(62) Divisional to Application Number :NA
Filing Date :NA

(71)**Name of Applicant :**
1)CUMMINS IP, INC.
Address of Applicant :1400 73rd Avenue, NE, Minneapolis, Minnesota, United States of America
(72)**Name of Inventor :**
1)ANDREW MYER
2)JOHN HEICHELBECH
3)GEORGE MUNTEAN
4)STEPHEN HOLL
5)JAMES F. BURKE
6)JOHN ANTHIS

(57) Abstract :
An exhaust gas treatment system for an internal combustion engine may have a reductant delivery system with a reductant tank. A filter module positioned in the reductant tank filters reductant before it is conveyed to the reductant pump to remove impurities. In order to reduce gas flow to the pump, the filter module may have an outlet port leading to the reductant pump and a venting port positioned above the outlet port such that gas bubbles float to the venting port prior to entry of the reductant into the outlet port. The filter module may be secured to a tank level tank level sensor assembly, and may vent the gas to a gas reservoir above the reductant in the reductant tank. Such a filtration system may operate independently of any return line that conveys reductant back to the reductant tank.

No. of Pages : 37 No. of Claims : 20

(12) PATENT APPLICATION PUBLICATION
(21) Application No.924/CHE/2014 A
(19) INDIA
(22) Date of filing of Application :24/02/2014
(43) Publication Date : 08/05/2015

(54) Title of the invention : HOLDING STRUCTURE FOR SEATBELT TONGUE

(51) International classification	:A47L
(31) Priority Document No	:2013-059971
(32) Priority Date	:22/03/2013
(33) Name of priority country	:Japan
(86) International Application No	:NA
Filing Date	:NA
(87) International Publication No	: NA
(61) Patent of Addition to Application Number	:NA
Filing Date	:NA
(62) Divisional to Application Number	:NA
Filing Date	:NA

(71)**Name of Applicant :**
1)SUZUKI MOTOR CORPORATION
Address of Applicant :300, Takatsuka-cho, Minami-ku, Hamamatsu-shi, Shizuoka-Ken , Japan
(72)**Name of Inventor :**
1)Eiji HARUNARI

(57) Abstract :
To provide a tongue holding structure for a seatbelt capable of preventing occurrence of noise caused by a tongue without hindering entering and exiting and not reducing comfort of a passenger by providing a recess for housing and holding the tongue of the seatbelt in a quarter trim. [Solution] In a tongue holding structure for a seatbelt 1 for holding a tongue 3 provided in the seatbelt 1 of a rear seat during nonuse of the seatbelt 1, on a side of the rear seat, a door opening section 9 is disposed, a quarter lower trim 13 covering a compartment interior sidewall on a side of the rear seat is provided, and a recess 15 is provided at an end edge section 13a of the quarter lower trim 13 located on the door opening section 9 side, and an insertion port 16 is provided on a bottom surface section 15a of the recess 15 and, in a state in which a distal end metal fitting 3b of the tongue 3 is inserted into the insertion port 16, the tongue 3 is housed in the recess 15.

No. of Pages : 25 No. of Claims : 6

(12) PATENT APPLICATION PUBLICATION
(19) INDIA
(22) Date of filing of Application :25/02/2014
(21) Application No.1519/CHENP/2014 A
(43) Publication Date : 08/05/2015

(54) Title of the invention : ULTRASONIC SEALING APPARATUS AND ULTRASONIC SEALING METHOD

(51) International classification :A61F13/15,A61F13/49
(31) Priority Document No :2011182849
(32) Priority Date :24/08/2011
(33) Name of priority country :Japan
(86) International Application No :PCT/JP2012/005231
Filing Date :21/08/2012
(87) International Publication No :WO 2013/027390
(61) Patent of Addition to Application Number :NA
Filing Date :NA
(62) Divisional to Application Number :NA
Filing Date :NA

(71)**Name of Applicant :**
1)UNICHARM CORPORATION
Address of Applicant :182 Kinseichoshimobun Shikokuchuo shi Ehime 7990111 Japan
(72)**Name of Inventor :**
1)YAMAMOTO Hiroki
2)NAKANO Takumi
3)UKEGAWA Kazuo

(57) Abstract :
Provided is an ultrasonic sealing apparatus that forms a plurality of welded sections at intervals along a transport direction of a continuous web by applying an ultrasonic vibration to the continuous web while the continuous web is being transported along a predetermined linear track the continuous web being related to an absorbent article. The apparatus includes an ultrasonic horn that emits the ultrasonic vibration; an anvil that cooperates with the ultrasonic horn so as to nip the continuous web in a thickness direction thereof while the ultrasonic horn is emitting the ultrasonic vibration towards the continuous web; and a reciprocating linear motion mechanism that moves the ultrasonic horn and the anvil along a forward path and a backward path which are parallel to the linear track. The forward path has an equal speed region in which the ultrasonic horn and the anvil oppose each other in the thickness direction and move at a speed value which is the same as a transport speed value of the continuous web. The ultrasonic horn and the anvil perform a nipping and a releasing of the nipping of the continuous web while moving in the equal speed region. The ultrasonic horn emits the ultrasonic vibration during the nipping of the continuous web.

No. of Pages : 46 No. of Claims : 11

(12) PATENT APPLICATION PUBLICATION
(19) INDIA
(22) Date of filing of Application :26/02/2014
(21) Application No.1561/CHENP/2014 A
(43) Publication Date : 08/05/2015

(54) Title of the invention : INSULATOR FOR HIGH VOLTAGE GAS INSULATED SWITCH GEAR

(51) International classification :H02G5/06
(31) Priority Document No :61/530569
(32) Priority Date :02/09/2011
(33) Name of priority country :U.S.A.
(86) International Application No :PCT/EP2012/067042
Filing Date :02/09/2012
(87) International Publication No :WO 2013/030388
(61) Patent of Addition to Application Number :NA
Filing Date :NA
(62) Divisional to Application Number :NA
Filing Date :NA

(71)**Name of Applicant :**
1)ABB RESEARCH LTD
Address of Applicant :Affolternstrasse 44 CH 8050 Z¼rich Switzerland
2)ABB TECHNOLOGY AG
(72)**Name of Inventor :**
1)ZANT Nikolaus
2)BEDNAROWSKI Dariusz
3)PLATEK Robert
4)MARTINI Harald
5)MALINOWSKI Lukasz

(57) Abstract :
The invention is directed to an insulator (1) for a gas insulated device. The insulator (1) comprises an injection molded insulator disc (2) and a conductor (3). The insulator disc (2) comprises a center opening (4) encompassed by an inner bead (5) inside which the conductor (3) is arranged in a form fit manner.

No. of Pages : 39 No. of Claims : 30

(12) PATENT APPLICATION PUBLICATION
(19) INDIA
(22) Date of filing of Application :28/02/2014
(21) Application No.1614/CHENP/2014 A
(43) Publication Date : 08/05/2015

(54) Title of the invention : D PSICOSE 3 EPIMERASE MUTANT WITH IMPROVED THERMAL STABILITY AND CONTINUOUS PRODUCTION OF D PSICOSE USING SAME

(51) International classification :C12N9/92,C12N15/61,C12N15/77
(31) Priority Document No :1020110084712
(32) Priority Date :24/08/2011
(33) Name of priority country :Republic of Korea
(86) International Application No :PCT/KR2012/006637
Filing Date :21/08/2012
(87) International Publication No :WO 2013/027999
(61) Patent of Addition to Application Number :NA
Filing Date :NA
(62) Divisional to Application Number :NA
Filing Date :NA

(71)**Name of Applicant :**
1)CJ CHEILJEDANG CORPORATION
Address of Applicant :500 Namdaemunro 5 ga Jung gu Seoul 100 749 Republic of Korea
(72)**Name of Inventor :**
1)KIM Yang Hee
2)KIM Jin Ha
3)LEE Young Mi
4)HONG Young Ho
5)KIM Min Hae
6)KIM Seong Bo
7)PARK Seung Won
8)OH Seung Hyun
9)OH Deok Kun
10)CHOI Jin Geun

(57) Abstract :
The present invention relates to a D psicose 3 epimerase mutant of which the thermal stability is improved by substituting an amino acid of a specific sequence number. In addition the present invention relates to a recombinant vector comprising the gene of the D psicose 3 epimerase mutant and a recombinant strain transformed with the recombinant vector. Further the present invention relates to an immobilized reactor prepared using the enzyme mutant or the recombinant vector and a method for producing D psicose using the immobilized reactor.

No. of Pages : 20 No. of Claims : 8

(12) PATENT APPLICATION PUBLICATION
(19) INDIA
(22) Date of filing of Application :24/02/2014
(21) Application No.894/CHE/2014 A
(43) Publication Date : 08/05/2015

(54) Title of the invention : SYSTEM AND METHOD FOR CONTROLLING A WIND TURBINE

(51) International classification :F03D
(31) Priority Document No :13/779829
(32) Priority Date :28/02/2013
(33) Name of priority country :U.S.A.
(86) International Application No :NA
Filing Date :NA
(87) International Publication No : NA
(61) Patent of Addition to Application Number :NA
Filing Date :NA
(62) Divisional to Application Number :NA
Filing Date :NA

(71)**Name of Applicant :**
1)GENERAL ELECTRIC COMPANY
Address of Applicant :1 RIVER ROAD, SCHENECTADY, NEW YORK 12345 U.S.A.
(72)**Name of Inventor :**
1)HERRIG, ANDREAS
2)HONHOFF, SASKIA GERARDA

(57) Abstract :
In one aspect, a method for controlling a wind turbine based on an identified surface condition of a rotor blade may include monitoring an operating parameter of the wind turbine to obtain parameter data related to the operating parameter as an operating input of the wind turbine changes, analyzing the parameter data to identify a roughness state of the rotor blade and performing a corrective action in response to the identified roughness state.

No. of Pages : 35 No. of Claims : 20

(12) PATENT APPLICATION PUBLICATION
(21) Application No.4819/CHE/2013 A
(19) INDIA
(22) Date of filing of Application :25/10/2013
(43) Publication Date : 08/05/2015

(54) Title of the invention : A METHOD AND DEVICE TO DETERMINE A STATE OF A REDUCING AGENT

(51) International classification :F01N3/00
(31) Priority Document No :NA
(32) Priority Date :NA
(33) Name of priority country :NA
(86) International Application No :NA
Filing Date :NA
(87) International Publication No : NA
(61) Patent of Addition to Application Number :NA
Filing Date :NA
(62) Divisional to Application Number :NA
Filing Date :NA

(71)**Name of Applicant :**
1)Bosch Limited
Address of Applicant :Post Box No 3000, Hosur Road, Adugodi, Bangalore 560030, Karnataka India
2)Robert Bosch GmbH
(72)**Name of Inventor :**
1)DHAKSHINAMURTHY Sandeep

(57) Abstract :
A device 100 to determine a state of a state of Diesel Exhaust Fluid (DEF) in a DEF tank of a vehicle is disclosed. The device 100 comprises a DEF level sensor 101 to determine a DEF level in the DEF tank; a sloshing detection means 102 to detect a sloshing phenomenon of the DEF based on the determined DEF level; and a DEF state determination means 103 to determine the state of the DEF based on the detected sloshing phenomenon.

No. of Pages : 10 No. of Claims : 5

(12) PATENT APPLICATION PUBLICATION
(19) INDIA
(22) Date of filing of Application :31/10/2013
(21) Application No.4916/CHE/2013 A
(43) Publication Date : 08/05/2015

(54) Title of the invention : A METHOD AND SYSTEM FOR TRIGGERING URL LOAD REQUESTS FROM A BROWSER

(51) International classification :G06F17/00
(31) Priority Document No :NA
(32) Priority Date :NA
(33) Name of priority country :NA
(86) International Application No :NA
Filing Date :NA
(87) International Publication No : NA
(61) Patent of Addition to Application Number :NA
Filing Date :NA
(62) Divisional to Application Number :NA
Filing Date :NA

(71)**Name of Applicant :**
1)DIPIN KOLLENCHERI PUTHENVEETTIL
Address of Applicant :# 2870, ORION BUILDING, BAGMANE CONSTELLATION BUSINESS PARK, OUTER RING ROAD, DODDANEKUNDI CIRCLE, MARATHAHALLI POST, BANGALORE - 560 037 Karnataka India
(72)**Name of Inventor :**
1)DIPIN KOLLENCHERI PUTHENVEETTIL
2)DR. JOY BOSE

(57) Abstract :
A method and system that enables a user to trigger one or more Uniform Resource Locator (URL) load requests on one or more background tabs while displaying the current browsing webpage on the foreground tab, is disclosed. The browser provides one or more address spaces for the user to input the URLs for triggering the URL load requests on one or more background tabs while displaying the same foreground tab on the browser. The browser displays loading progress in the foreground tab of one or more URL load requests issued in the background tabs. The browser can receive one or more commands in one or more address spaces on the foreground tab to launch one or more applications. The browser eliminates the need to switch to a new tab just to trigger one or more URL load requests in new tabs and enhances browsing experience of the user.

No. of Pages : 39 No. of Claims : 24

(12) PATENT APPLICATION PUBLICATION
(21) Application No.4908/CHE/2013 A
(19) INDIA
(22) Date of filing of Application :31/10/2013
(43) Publication Date : 08/05/2015

(54) Title of the invention : METHOD AND APPARATUS FOR AUTOMATED PRE-CLEANING, REPROCESSING AND POST REPROCESSING OF DIALYZER

(51) International classification :A61M1/00
(31) Priority Document No :NA
(32) Priority Date :NA
(33) Name of priority country :NA
(86) International Application No :NA
Filing Date :NA
(87) International Publication No : NA
(61) Patent of Addition to Application Number :NA
Filing Date :NA
(62) Divisional to Application Number :NA
Filing Date :NA

(71)**Name of Applicant :**
1)TUSCANO EQUIPMENTS PVT LTD
Address of Applicant :NEW NO. 121, OLD NO. 61, I FLOOR, JAMMI BUILDINGS, ROYAPETTAH HIGH ROAD, MYLAPORE, CHENNAI - 600 004 Tamil Nadu India
(72)**Name of Inventor :**
1)JAYANTHI ANAND
2)C. SUDHAN
3)Y STEVE REXON
4)N. DHANRAJ
5)R. SAMPATH
6)VIJIL JOSE

(57) Abstract :
The various embodiments of the present invention provide a fully automated apparatus for dialyzer reprocessing and associated apparatuses once a dialysis is performed for a patient. The apparatus provides an automatic means with minimal manual intervention for effectively clear ing the dialyzer. By cleaning the dialyzer automatically, the apparatus also prevents any harmful effects of cleaning chemicals on medical personnel. The ap saratus comprises a pre-cleaning module, a chemical formulation module, a reprocessing module and a post reprocessing module. The reprocessing module further comprises a dialyzer cleaning module, disinfection module, assessment module and preservation module.

No. of Pages : 46 No. of Claims : 20

(12) PATENT APPLICATION PUBLICATION
(21) Application No.4909/CHE/2013 A
(19) INDIA
(22) Date of filing of Application :31/10/2013
(43) Publication Date : 08/05/2015

(54) Title of the invention : SOLAR PARABOLIC TROUGH COLLECTOR WITH INTEGRATED TORQUE TUBE - BOX SUPPORT STRUCTURE

(51) International classification :F24J2/00
(31) Priority Document No :NA
(32) Priority Date :NA
(33) Name of priority country :NA
(86) International Application No :NA
Filing Date :NA
(87) International Publication No : NA
(61) Patent of Addition to Application Number :NA
Filing Date :NA
(62) Divisional to Application Number :NA
Filing Date :NA

(71)**Name of Applicant :**
1)INDIAN INSTITUTE OF TECHNOLOGY MADRAS
Address of Applicant :IIT P.O, CHENNAI 600 036 Tamil Nadu India
(72)**Name of Inventor :**
1)DR. K. SRINIVAS REDDY

(57) Abstract :
The invention relates to a solar parabolic trough collector which is capable of exhibiting torsional and bending properties, thereby provided with a combination of torque and torque box which are modified to take both the bending and the torsional loads. The system consists of an internal torque tube within a circular tube and also an external torque box surrounding the said torque tube which ensures that it has better high bending capacity and increased torsional rigidity but with least material consumption.

No. of Pages : 7 No. of Claims : 8

(12) PATENT APPLICATION PUBLICATION
(19) INDIA
(22) Date of filing of Application :06/11/2013
(21) Application No.5006/CHE/2013 A
(43) Publication Date : 08/05/2015

(54) Title of the invention : OUT- OF - POCKET INSURANCE

(51) International classification :G06Q40/08
(31) Priority Document No :NA
(32) Priority Date :NA
(33) Name of priority country :NA
(86) International Application No :NA
Filing Date :NA
(87) International Publication No : NA
(61) Patent of Addition to Application Number :NA
Filing Date :NA
(62) Divisional to Application Number :NA
Filing Date :NA

(71)**Name of Applicant :**
1)KALYAN CHAKRAVARTHY DOMMALAPATI
Address of Applicant :G2, 1ST BLOCK, AAKASH ENCLAVE APARTMENTS, # 12 (NEW NUMBER), VIVEKANANDA NAGAR MAIN ROAD, KOLATHUR, CHENNAI - 600 099 Tamil Nadu India
(72)**Name of Inventor :**
1)KALYAN CHAKRAVARTHY DOMMALAPATI

(57) Abstract :
Technologies related to out-of-pocket insurance are described. In some examples, out-of-pocket insurance covers the out-of-pocket costs associated with making an insurance claim with a primary insurance provider. This out-of-pocket insurance coverage may cover any payment that an insurance policy holder must pay out-of-pocket in a valid insurance plan for valid insurance claims.

No. of Pages : 31 No. of Claims : 13

(12) PATENT APPLICATION PUBLICATION
(19) INDIA
(22) Date of filing of Application :06/11/2013
(21) Application No.5008/CHE/2013 A
(43) Publication Date : 08/05/2015

(54) Title of the invention : METHOD AND APPARATUS FOR MANAGING DATA FOR PERFORMING WRITE BACK ON WHAT-IF ANALYSIS

(51) International classification	:G06F17/30
(31) Priority Document No	:NA
(32) Priority Date	:NA
(33) Name of priority country	:NA
(86) International Application No	:NA
Filing Date	:NA
(87) International Publication No	: NA
(61) Patent of Addition to Application Number	:NA
Filing Date	:NA
(62) Divisional to Application Number	:NA
Filing Date	:NA

(71)**Name of Applicant :**
1)HUAWEI TECHNOLOGIES INDIA PVT. LTD.
Address of Applicant :No.23, Level 3 & 4, Leela Galleria, Airport Road, Bangalore-560017, Karnataka, India
(72)**Name of Inventor :**
1)V VIMAL DAS KAMMATH
2)VIJAYA DAS C R
3)TAN, JIHUI

(57) Abstract :
Embodiments of the present invention provide a method and apparatus for managing data for performing write back on what-if analysis. In an embodiment, the method of the present invention stores only minimal data during write back on what-if analysis and actual calculations are deferred to the time when data is actually queried by a user. The present invention comprises a write back processor which stores all the modifications to the original data in a write back database. When the original database is queried by user, the write back processor calculates the changes to the queried data based on the modifications and provides the report.

No. of Pages : 30 No. of Claims : 17

(12) PATENT APPLICATION PUBLICATION
(19) INDIA
(22) Date of filing of Application :28/10/2013
(21) Application No.4844/CHE/2013 A
(43) Publication Date : 08/05/2015

(54) Title of the invention : WATER FILLED BABY MATTRESS WITH INBUILT HEATER

(51) International classification :A47C21/04
(31) Priority Document No :NA
(32) Priority Date :NA
(33) Name of priority country :NA
(86) International Application No :NA
Filing Date :NA
(87) International Publication No : NA
(61) Patent of Addition to Application Number :NA
Filing Date :NA
(62) Divisional to Application Number :NA
Filing Date :NA

(71)**Name of Applicant :**
1)CHELAT MATHEW MANLY
Address of Applicant :CHELAT, PATTANAM, VADAKKEKKARA P.O. NORTH PARUR - 683 522 Kerala India
(72)**Name of Inventor :**
1)CHELAT MATHEW MANLY

(57) Abstract :
A water mattress with in-built heater for use in the treatment of hypothermia in new born babies and infants. Figure 1. It consists of a water filled plastic bag that is made watertight. It has a filling neck with a pull up spout with water sealing cap. It consists of in-built heater that is immersed inside the water in the chamber. Figure 2. The heater used is an immersion heater that works on 12/24volts and 50-lOOwatts. It keeps the baby warm. Baby feels relaxed due to the water inside the mattress. Babys body weight is evenly supported by the water. The heat from water inside the mattress is directly transferred to the baby. There is very little heat loss. The working voltage of 12 or 24 volts is very safe for the baby. Hence BABY WATER MATTRESS WARMER is superior to other existing baby warmers like radiant warmers, incubators etc..

No. of Pages : 9 No. of Claims : 7

(12) PATENT APPLICATION PUBLICATION
(21) Application No.968/CHE/2014 A
(19) INDIA
(22) Date of filing of Application :26/02/2014
(43) Publication Date : 08/05/2015

(54) Title of the invention : ROBOT PICKING SYSTEM, CONTROL DEVICE, AND METHOD OF MANUFACTURING A WORKPIECE

(51) International classification :B25J
(31) Priority Document No :2013-055221
(32) Priority Date :18/03/2013
(33) Name of priority country :Japan
(86) International Application No :NA
Filing Date :NA
(87) International Publication No : NA
(61) Patent of Addition to Application Number :NA
Filing Date :NA
(62) Divisional to Application Number :NA
Filing Date :NA

(71)**Name of Applicant :**
1)KABUSHIKI KAISHA YASKAWA DENKI
Address of Applicant :2-1, KUROSAKI-SHIROISHI, YAHATANISHI-KU, KITAKYUSHU-SHI, FUKUOKA 806-0004 Japan
(72)**Name of Inventor :**
1)YOSUKE KAMIYA
2)SHINGO ANDO

(57) Abstract :
A robot picking system (1) includes a robot (R) that picks up a work (W) in a first stocker (2) accommodating a plurality of works (W), a control device (4) that controls an operation of the robot (R), and an image acquiring device (6) that acquires image data including information related to the plurality of works (W). The control device (4) includes a candidate data generating unit (13) that generates candidate data including information of candidate works (WC) that are candidates of a picking-up target using the image data, and a target work selecting unit (19) that selects a target work (WO) that is a picking-up target from the candidate works (WC) using the candidate data.

No. of Pages : 31 No. of Claims : 9

(12) PATENT APPLICATION PUBLICATION
(21) Application No.988/CHE/2014 A
(19) INDIA
(22) Date of filing of Application :27/02/2014
(43) Publication Date : 08/05/2015

(54) Title of the invention : SYSTEM AND AUTOMATED METHOD FOR MIXED-SIGNAL CIRCUIT FUNCTIONAL ANALYSIS

(51) International classification :G08B
(31) Priority Document No :61/852,361
(32) Priority Date :14/03/2013
(33) Name of priority country :U.S.A.
(86) International Application No :NA
Filing Date :NA
(87) International Publication No : NA
(61) Patent of Addition to Application Number :NA
Filing Date :NA
(62) Divisional to Application Number :NA
Filing Date :NA

(71)**Name of Applicant :**
1)BAE SYSTEMS INFORMATION AND ELECTRONIC SYSTEMS INTEGRATION INC.
Address of Applicant :P.O. Box 868, NHQ1-719, Nashua, NH 03061-0868, United States of America
(72)**Name of Inventor :**
1)YUNBIN DENG
2)VENKAT K. GOPALAKRISHNAN
3)RICK L. THOMPSON

(57) Abstract :
A system and automated method for mixed-signal circuit functional analysis is disclosed. In one embodiment, the method includes identifying hierarchical levels of functional components in an inputted mixed-signal circuit based on netlist, property of an input signal and a design knowledge base.

No. of Pages : 27 No. of Claims : 10

(12) PATENT APPLICATION PUBLICATION
(19) INDIA
(22) Date of filing of Application :28/02/2014
(21) Application No.1603/CHENP/2014 A
(43) Publication Date : 08/05/2015

(54) Title of the invention : A PROCESS FOR THE MANUFACTURE OF SEMICONDUCTOR DEVICES COMPRISING THE CHEMICAL MECHANICAL POLISHING OF ELEMENTAL GERMANIUM AND/OR SI1 XGEX MATERIAL IN THE PRESENCE OF A CMP COMPOSITION HAVING A PH VALUE OF 3.0 TO 5.5

(51) International classification :B24B29/02
(31) Priority Document No :61/513691
(32) Priority Date :01/08/2011
(33) Name of priority country :U.S.A.
(86) International Application No :PCT/IB2012/053878
Filing Date :30/07/2012
(87) International Publication No :WO 2013/018016
(61) Patent of Addition to Application Number :NA
Filing Date :NA
(62) Divisional to Application Number :NA
Filing Date :NA

(71)**Name of Applicant :**
1)BASF SE
Address of Applicant :67056 Ludwigshafen Germany
2)NING Gao
(72)**Name of Inventor :**
1)NOLLER Bastian Marten
2)DRESCHER Bettina
3)GILLOT Christophe

(57) Abstract :
1 xxA process for the manufacture of semiconductor devices comprising the chemical mechanical polishing of elemental germanium and/or SiGe material with 0.1 = x < 1 in the presence of a chemical mechanical polishing (CMP) composition having a pH value in the range of from 3.0 to 5.5 and comprising: (A) inorganic particles organic particles or a mixture or composite thereof (B) at least one type of an oxidizing agent and (C) an aqueous medium.

No. of Pages : 22 No. of Claims : 14

(12) PATENT APPLICATION PUBLICATION
(19) INDIA
(22) Date of filing of Application :28/10/2013
(21) Application No.4854/CHE/2013 A
(43) Publication Date : 08/05/2015

(54) Title of the invention : METHOD AND APPARATUS FOR RECOGNIZING HUMAN EMOTION EXPRESSIONS BASED ON SPEECH SIGNAL

(51) International classification :G10L15/00
(31) Priority Document No :NA
(32) Priority Date :NA
(33) Name of priority country :NA
(86) International Application No :NA
Filing Date :NA
(87) International Publication No : NA
(61) Patent of Addition to Application Number :NA
Filing Date :NA
(62) Divisional to Application Number :NA
Filing Date :NA

(71)**Name of Applicant :**
1)SAMSUNG R&D INSTITUTE INDIA BANGALORE PRIVATE LIMITED
Address of Applicant :# 2870, ORION Building, Bagmane Constellation Business Park, Outer Ring Road, Doddanakundi Circle, Marathahalli Post, Bangalore-560 037 Karnataka India
2)INTERNATIONAL INSTITUTE OF INFORMATION TECHNOLOGY, HYDERABAD
(72)**Name of Inventor :**
1)Bayya Yegnanarayana
2)Mittal Vinay Kumar
3)Moogi Pratibha
4)Gangamohan Paidi
5)Kadiri Sudarsana Reddy

(57) Abstract :
A method and apparatus for recognizing human emotion expressions based on speech signal is disclosed. In one embodiment, a method includes filtering an input speech signal corresponding to a voiced acoustic expression of an individual and determining glottal closure instance (GCI) locations in the speech signal using the filtered signal. Further, the method includes computing instantaneous values of a set of acoustic features of the speech signal using the estimated GCI locations in the speech signal. The instantaneous values of the set of acoustic features are normalized with reference to a same set of acoustic features of a neutral speech signal associated with the individual. A multidimensional joint distribution is generated based on the normalized instantaneous values of acoustic features and matched with a pre-defined emotion specific template. The Moreover, the method includes determining a human emotion expression associated with the individual by calculating the number of matched found.

No. of Pages : 33 No. of Claims : 20

(12) PATENT APPLICATION PUBLICATION
(19) INDIA
(22) Date of filing of Application :28/10/2013
(21) Application No.4856/CHE/2013 A
(43) Publication Date : 08/05/2015

(54) Title of the invention : METHOD AND SYSTEM FOR PARTIAL LOCKLESS REAL TIME COLLABORATION ON A CANVAS

(51) International classification :G06F3/00
(31) Priority Document No :NA
(32) Priority Date :NA
(33) Name of priority country :NA
(86) International Application No :NA
Filing Date :NA
(87) International Publication No : NA
(61) Patent of Addition to Application Number :NA
Filing Date :NA
(62) Divisional to Application Number :NA
Filing Date :NA

(71)**Name of Applicant :**
1)SAMSUNG R&D INSTITUTE INDIA BANGALORE PRIVATE LIMITED
Address of Applicant :# 2870, ORION Building, Bagmane Constellation Business Park, Outer Ring Road, Doddanakundi Circle, Marathahalli Post, Bangalore-560 037 Karnataka India
(72)**Name of Inventor :**
1)MAHESHWARI, Sumit
2)SRILAKSHMI, Annam
3)KUMAR, Amit
4)SHANDILYA, Prashanth Rayapalya Krishnamurthy
5)MOHANTY, Manas Ranjan
6)SAMAL, Siba Prasad
7)PATIL, Niranjan Basagouda

(57) Abstract :
The various embodiments of the present invention provide a method and system for managing collaborative authoring on a canvas. The method comprising receiving a request to collaborate on a canvas from an user, determining whether one or more viewports from a plurality of viewports are overlapping or are in vicinity to a viewport associated with the user by a client device and automatically sending a request to a collaboration server to lock at least one object in the viewport if the one or more viewports are overlapping or are in vicinity to the viewport. The method further comprises denying a request from a second user to collaborate on the at least one object in the canvas.

No. of Pages : 25 No. of Claims : 17

(12) PATENT APPLICATION PUBLICATION
(19) INDIA
(22) Date of filing of Application :25/02/2014
(21) Application No.1504/CHENP/2014 A
(43) Publication Date : 08/05/2015

(54) Title of the invention : AN APPARATUS AND METHOD FOR PROCESSING A FOOD STUFF

(51) International classification :A47J43/07
(31) Priority Document No :61/530122
(32) Priority Date :01/09/2011
(33) Name of priority country :U.S.A.
(86) International Application No :PCT/IB2012/054265
Filing Date :23/08/2012
(87) International Publication No :WO 2013/030728
(61) Patent of Addition to Application Number :NA
Filing Date :NA
(62) Divisional to Application Number :NA
Filing Date :NA

(71)**Name of Applicant :**
1)KONINKLIJKE PHILIPS N.V.
Address of Applicant :High Tech Campus 5 NL 5656 AE Eindhoven Netherlands
(72)**Name of Inventor :**
1)UNTEREGGER Johann
2)ROSENWIRTH Christian

(57) Abstract :
The present application relates to an apparatus for processing a food stuff. The apparatus has a housing (2) and a cutting tool (5) rotatably mounted in the housing (2) having a cutting edge (35) and a trailing edge(31). The cutting tool (5) is arranged to pass once per revolution through a processing region (43) in the housing in which a food stuff is receivable and to pass through a recovery region (45). The recovery region is defined in the housing between the trailing edge passing from the processing region and the cutting edge passing into the processing region as the cutting tool rotates and the cutting tool is free to rotate in the processing region without contacting the food stuff. Therefore the cutting tool (5) acts on a food stuff as the cutting tool rotates through the processing region and recovers the rotational speed lost due to acting on a food stuff in the processing region as the cutting tool (5) rotates through the recovery region. The present application also relates to a food processor and to a method of processing a food stuff.

No. of Pages : 19 No. of Claims : 15

(12) PATENT APPLICATION PUBLICATION
(21) Application No.5037/CHE/2013 A
(19) INDIA
(22) Date of filing of Application :07/11/2013
(43) Publication Date : 08/05/2015

(54) Title of the invention : A METHOD AND SYSTEM FOR IMPLEMENTING NG-FIREWALL, A NG-FIREWALL CLIENT AND A NG-FIREWALL SERVER

(51) International classification :G06F15/16
(31) Priority Document No :NA
(32) Priority Date :NA
(33) Name of priority country :NA
(86) International Application No :NA
Filing Date :NA
(87) International Publication No : NA
(61) Patent of Addition to Application Number :NA
Filing Date :NA
(62) Divisional to Application Number :NA
Filing Date :NA

(71)**Name of Applicant :**
1)HUAWEI TECHNOLOGIES INDIA PVT. LTD.
Address of Applicant :No. 23, Level 3&4 Leela Galleria, Airport Road, Bangalore 560017 India Andhra Pradesh India
(72)**Name of Inventor :**
1)NAVIN, Sanjay Kumar
2)NAYAK, Debabrata
3)ZHANG, Chi

(57) Abstract :
The embodiments of the present invention provide a method and system for implementing NG-Firewall, a NG-Firewall client and a NG-Firewall server. The method includes: sending (101) a request message for requesting security information of an application when the application is started in a terminal device configured with the NG-Firewall client; receiving (102) a response message including the security information of the application; processing received (103) or transmitted data of the application by using the security information of the application. In this invention, dynamically loading of attack defense can be realized, software footprints required on the terminal device can be reduced and performance of application installed on the terminal device can be improved.

No. of Pages : 68 No. of Claims : 28

(12) PATENT APPLICATION PUBLICATION
(21) Application No.4981/CHE/2013 A
(19) INDIA
(22) Date of filing of Application :05/11/2013
(43) Publication Date : 08/05/2015

(54) Title of the invention : AN IMPROVED PROCESS FOR THE PREPARATION OF PAZOPANIB OR A PHARMACEUTICALLY ACCEPTABLE SALT THEREOF

(51) International classification :A61K47/06
(31) Priority Document No :NA
(32) Priority Date :NA
(33) Name of priority country :NA
(86) International Application No :NA
Filing Date :NA
(87) International Publication No : NA
(61) Patent of Addition to Application Number :NA
Filing Date :NA
(62) Divisional to Application Number :NA
Filing Date :NA

(71)**Name of Applicant :**
1)LAURUS LABS PRIVATE LTD
Address of Applicant :2ND FLOOR, SERENE CHAMBERS ROAD, #7, BANJARA HILLS, HYDERABAD - 500 034 Andhra Pradesh India
(72)**Name of Inventor :**
1)SATYANARAYANA CHAVA
2)SEETA RAMANJANEYULU GORANTLA
3)VENKATA SUNIL KUMAR INDUKURI
4)SANJAY KUMAR DEHURY
5)NAGARAJU MEKALA
6)JAHANGEER BABA SHAIK

(57) Abstract :
The present invention is relates to an improved process for the preparation of pazopanib or a pharmaceutically acceptable salts thereof. More specifically the invention pertains to pazopanib hydrochloride preparation .by using base without limiting to the any specific particle size.

No. of Pages : 26 No. of Claims : 10

(12) PATENT APPLICATION PUBLICATION
(21) Application No.969/CHE/2014 A
(19) INDIA
(22) Date of filing of Application :26/02/2014
(43) Publication Date : 08/05/2015

(54) Title of the invention : ROBOT PICKING SYSTEM, CONTROL DEVICE AND METHOD OF MANUFACTURING A WORKPIECE

(51) International classification	:B25J9/00
(31) Priority Document No	:2013-055225
(32) Priority Date	:18/03/2013
(33) Name of priority country	:Japan
(86) International Application No	:NA
Filing Date	:NA
(87) International Publication No	: NA
(61) Patent of Addition to Application Number	:NA
Filing Date	:NA
(62) Divisional to Application Number	:NA
Filing Date	:NA

(71)**Name of Applicant :**
1)KABUSHIKI KAISHA YASKAWA DENKI
Address of Applicant :2-1, KUROSAKI-SHIROISHI, YAHATANISHI-KU, KITAKYUSHU-SHI, FUKUOKA 806-0004 Japan
(72)**Name of Inventor :**
1)YOSUKE KAMIYA
2)SHINGO ANDO

(57) Abstract :
A robot picking system 1 includes a robot R including a gripper 11 that picks up a target work WO in a first stocker 2 accommodating a plurality of works W, a control device 4 that controls an operation of the robot R, and an image acquiring device 6 that acquires image data including information related to the target work WO. The control device 4 includes a trajectory calculating unit 18 that sets a first trajectory TI including a first zone Zl in which a posture of the gripper 11 is changed and a second zone Z2 in which the gripper 11 having the changed posture approaches the target work WO that is a picking-up target.

No. of Pages : 35 No. of Claims : 10

(12) PATENT APPLICATION PUBLICATION
(19) INDIA
(22) Date of filing of Application :25/10/2013
(21) Application No.4829/CHE/2013 A
(43) Publication Date : 08/05/2015

(54) Title of the invention : AN EX-VIVO ANIMAL SURROGATE MODEL FOR STUDYING HUMAN HAIR DEVELOPMENT

(51) International classification	:A61Q7/00	(71)**Name of Applicant :**
(31) Priority Document No	:NA	**1)ITC LIMITED**
(32) Priority Date	:NA	Address of Applicant :ITC Life Sciences & Technology
(33) Name of priority country	:NA	Centre, Peenya Industrial Area, No. 3, 1st Main, 1 st Phase ,
(86) International Application No	:NA	Bangalore 560 058 Karnataka India
Filing Date	:NA	(72)**Name of Inventor :**
(87) International Publication No	: NA	**1)ACHARYA, Aviseka**
(61) Patent of Addition to Application Number	:NA	**2)HEGDE, Ashok**
Filing Date	:NA	**3)KALSI, Gurpreet**
(62) Divisional to Application Number	:NA	
Filing Date	:NA	

(57) Abstract :
The present disclosure relates to a method of ex-vivo growth of goat skin hair follicles as an animal model for human hair growth and development. The present disclosure also relates to a culture medium composition for development of an ex-vivo system for growth and development of goat skin derived hair follicles.

No. of Pages : 39 No. of Claims : 24

(12) PATENT APPLICATION PUBLICATION
(19) INDIA
(22) Date of filing of Application :27/02/2014
(21) Application No.1589/CHENP/2014 A
(43) Publication Date : 08/05/2015

(54) Title of the invention : METHOD OF CONTROLLING PARASITIC WEEDS WITH MIXTURES COMPRISING HERBICIDAL ACETOLACTATE SYNTHASE INHIBITORS AND PLANT GROWTH REGULATORS

(51) International classification	:A01N37/42,A01N43/50,A01N47/36
(31) Priority Document No	:11181041.2
(32) Priority Date	:13/09/2011
(33) Name of priority country	:EPO
(86) International Application No	:PCT/EP2012/067652
Filing Date	:10/09/2012
(87) International Publication No	:WO 2013/037735
(61) Patent of Addition to Application Number	:NA
Filing Date	:NA
(62) Divisional to Application Number	:NA
Filing Date	:NA

(71)**Name of Applicant :**
1)BASF AGROCHEMICAL PRODUCTS B.V.
Address of Applicant :Groningensingel 1 NL 6835 EA Arnhem Netherlands
(72)**Name of Inventor :**
1)PFENNING Matthias
2)BREMER Hagen

(57) Abstract :
The present invention relates to a method for controlling parasitic weeds comprising applying to the host plant the weeds and/or their habitat herbicidal mixtures or compositions comprising one two or three acetolactate synthase (ALS) inhibitor(s) and one two or three plant growth regulator(s) (PGR) which act as ethylene modulators. The present invention also relates to a method for improving the yield of the crop plant comprising applying to the host plant and/or their habitat mixtures comprising components as defined herein. The present invention also relates to herbicidal mixtures comprising one two or three acetolactate synthase (ALS) inhibitor(s) selected from imazamox or tribenuron methyl and one two or three plant growth regulator(s) (PGR) selected from prohexadione prohexadione calcium trinexapac or trinexapac ethyl compositions comprising said mixtures and their use for the control of parasitic weeds.

No. of Pages : 40 No. of Claims : 18

(12) PATENT APPLICATION PUBLICATION
(19) INDIA
(22) Date of filing of Application :28/02/2014
(21) Application No.1639/CHENP/2014 A
(43) Publication Date : 08/05/2015

(54) Title of the invention : VASCULAR TREATMENT OUTCOME VISUALIZATION

(51) International classification :A61F2/00,A61B6/00,G06T7/00
(31) Priority Document No :61/531144
(32) Priority Date :06/09/2011
(33) Name of priority country :U.S.A.
(86) International Application No :PCT/IB2012/054294
Filing Date :24/08/2012
(87) International Publication No :WO 2013/035005
(61) Patent of Addition to Application Number :NA
Filing Date :NA
(62) Divisional to Application Number :NA
Filing Date :NA

(71)**Name of Applicant :**
1)KONINKLIJKE PHILIPS N.V.
Address of Applicant :High Tech Campus 5 NL 5656 AE Eindhoven Netherlands
(72)**Name of Inventor :**
1)AUVRAY Vincent Maurice Andr
2)FLORENT Raoul

(57) Abstract :
The present invention relates to vascular treatment outcome visualization. To provide an enhanced possibility to check that a vascular treatment has been correctly performed it is proposed to provide (112) a first image data (114) of a region of interest of a vascular structure at a first point in time and to provide (116) at least one second image data (118) of the region of interest of the vascular structure at a second point in time wherein a vascular treatment has been applied to the vascular structure between the first point in time and the second point in time. Further the first and the at least one second image data are combined (120) generating a joint outcome visualization image data (122) and the joint outcome visualization image data is displayed (124).

No. of Pages : 32 No. of Claims : 15

(12) PATENT APPLICATION PUBLICATION
(21) Application No.4853/CHE/2013 A
(19) INDIA
(22) Date of filing of Application :28/10/2013
(43) Publication Date : 08/05/2015

(54) Title of the invention : INORGANIC-ORGANIC POLYMER NANOCOMPOSITES AND METHODS FOR THEIR PREPARATION AND USE

(51) International classification :C08K3/00
(31) Priority Document No :NA
(32) Priority Date :NA
(33) Name of priority country :NA
(86) International Application No :NA
Filing Date :NA
(87) International Publication No : NA
(61) Patent of Addition to Application Number :NA
Filing Date :NA
(62) Divisional to Application Number :NA
Filing Date :NA

(71)**Name of Applicant :**
1)EMPIRE TECHNOLOGY DEVELOPMENT LLC
Address of Applicant :2711 Centerville Road, Suite 400, Wilmington, DE 19808, United States of America.
(72)**Name of Inventor :**
1)Arockiadoss THEVASAHAYAM

(57) Abstract :
Inorganic-organic polymer nanocomposites are provided. The inorganic-organic polymer nanocomposite includes a polymeric matrix and a plurality of metal nanoparticles embedded within the polymeric matrix. The plurality of metal nanoparticles are configured to provide cooling of the nanocomposite upon exposure to photoradiation.

No. of Pages : 32 No. of Claims : 10

(12) PATENT APPLICATION PUBLICATION
(21) Application No.860/CHE/2014 A
(19) INDIA
(22) Date of filing of Application :21/02/2014
(43) Publication Date : 08/05/2015

(54) Title of the invention : NETWORK DEVICE FOR PROTOCOL ALIGNMENT THROUGH RECURSIVE, TIME SENSITIVE EVENT-BASED MATCHING

(51) International classification :G06F
(31) Priority Document No :13/781,397
(32) Priority Date :28/02/2013
(33) Name of priority country :U.S.A.
(86) International Application No :NA
Filing Date :NA
(87) International Publication No : NA
(61) Patent of Addition to Application Number :NA
Filing Date :NA
(62) Divisional to Application Number :NA
Filing Date :NA

(71)**Name of Applicant :**
1)Accenture Global Services Limited
Address of Applicant :3 Grand Canal Plaza, Grand Canal Street Upper, Dublin 4, IRELAND
(72)**Name of Inventor :**
1)Dennis CARROLL
2)Anh-Hoang VO
3)German ACUNA
4)Cecil O. LYNCH
5)Erica CREEN

(57) Abstract :
A protocol alignment system may include a data storage to store data records. The system may map events from the data records to a process map through a recursive matching process. The mapping may include recursively matching the events to nodes in threads in a map based on event times and thread times. One of the recursions may be selected as a best fit based on metrics determined for the recursions.

No. of Pages : 49 No. of Claims : 15

(12) PATENT APPLICATION PUBLICATION
(21) Application No.1437/CHENP/2014 A
(19) INDIA
(22) Date of filing of Application :24/02/2014
(43) Publication Date : 08/05/2015

(54) Title of the invention : METHODS FOR UNIFORM CRIMPING AND DEPLOYMENT OF A POLYMER SCAFFOLD

(51) International classification :A61F2/95
(31) Priority Document No :13/194162
(32) Priority Date :29/07/2011
(33) Name of priority country :U.S.A.
(86) International Application No :PCT/US2012/041692
Filing Date :08/06/2012
(87) International Publication No :WO 2013/019315
(61) Patent of Addition to Application Number :NA
Filing Date :NA
(62) Divisional to Application Number :NA
Filing Date :NA

(71)**Name of Applicant :**
1)ABBOTT CARDIOVASCULAR SYSTEMS INC.
Address of Applicant :3200 Lakeside Drive Santa Clara California 95054 U.S.A.
(72)**Name of Inventor :**
1)STANKUS John
2)SERNA Benjamyn

(57) Abstract :
A medical device includes a scaffold crimped to a catheter having an expansion balloon. The scaffold is crimped to the balloon by a process that includes one or more balloon pressurization steps. The balloon pressurization steps are selected to enhance scaffold retention to the balloon while retaining at least partially the original balloon folds as the balloon is pressurized and de pressurized within a crimper head. By at least partially retaining the original balloon folds a uniformity of scaffold expansion by the balloon is improved.

No. of Pages : 39 No. of Claims : 19

(12) PATENT APPLICATION PUBLICATION
(19) INDIA
(22) Date of filing of Application :27/02/2014
(21) Application No.1569/CHENP/2014 A
(43) Publication Date : 08/05/2015

(54) Title of the invention : SIDE ENTRY FITTING FOR HEAT EXCHANGER

(51) International classification :F28F9/00,B21D39/06,F16L41/08
(31) Priority Document No :61/515388
(32) Priority Date :05/08/2011
(33) Name of priority country :U.S.A.
(86) International Application No :PCT/CA2012/050520
Filing Date :31/07/2012
(87) International Publication No :WO 2013/020227
(61) Patent of Addition to Application Number :NA
Filing Date :NA
(62) Divisional to Application Number :NA
Filing Date :NA

(71)**Name of Applicant :**
1)DANA CANADA CORPORATION
Address of Applicant :656 Kerr Street Oakville Ontario L6K 3E4 Canada
(72)**Name of Inventor :**
1)STEWART Nikolas
2)WALLER Doug
3)KINDER Lee

(57) Abstract :
A heat exchanger system containing a heat exchanger coupled to a fitting. The fitting contains a tube having a heat exchanger attachment end and an opposing end. The fitting further having a sleeve having a sleeve body connecting a first end of the sleeve to an overlapping end. The first end of the sleeve being coupled to an outer surface of the tube and the sleeve body and the second end of the sleeve being spaced from the outer surface of the tube defining a space for receiving a conduit and adapted for coupling the fitting to the conduit. Also described is a fitting that can be attached to a conduit.

No. of Pages : 31 No. of Claims : 22

(12) PATENT APPLICATION PUBLICATION
(21) Application No.4799/CHE/2013 A
(19) INDIA
(22) Date of filing of Application :24/10/2013
(43) Publication Date : 08/05/2015

(54) Title of the invention : TWO-DIMENSIONAL TRANSITION METAL DICHALCOGENIDE SHEETS AND METHODS OF PREPARATION AND USE

(51) International classification :C01B
(31) Priority Document No :NA
(32) Priority Date :NA
(33) Name of priority country :NA
(86) International Application No :NA
Filing Date :NA
(87) International Publication No : NA
(61) Patent of Addition to Application Number :NA
Filing Date :NA
(62) Divisional to Application Number :NA
Filing Date :NA

(71)**Name of Applicant :**
1)EMPIRE TECHNOLOGY DEVELOPMENT LLC
Address of Applicant :2711 Centerville Road, Suite 400, Wilmington, DE 19808, United States of America.
(72)**Name of Inventor :**
1)Arockiadoss THEVASAHAYAM

(57) Abstract :
Methods of forming two-dimensional transition metal dichalcogenide sheets are provided. The methods include adding a cross-linking agent to an activating agent to form a solution and mixing a two-dimensional transition metal dichalcogenide with the solution to form a mixture. The methods also include adding a cleaving agent to the mixture to form one or more contiguous sheets of transition metal dichalcogenide.

No. of Pages : 31 No. of Claims : 10

(12) PATENT APPLICATION PUBLICATION
(21) Application No.4898/CHE/2013 A
(19) INDIA
(22) Date of filing of Application :30/10/2013
(43) Publication Date : 08/05/2015

(54) Title of the invention : A COMPOSITION COMPRISING OF A XANTHONOID AND CHOLECALCIFEROL AND USES THEREOF

(51) International classification :A61K31/00
(31) Priority Document No :NA
(32) Priority Date :NA
(33) Name of priority country :NA
(86) International Application No :NA
Filing Date :NA
(87) International Publication No : NA
(61) Patent of Addition to Application Number :NA
Filing Date :NA
(62) Divisional to Application Number :NA
Filing Date :NA

(71)**Name of Applicant :**
1)ITC LIMITED
Address of Applicant :ITC LIFE SCIENCES AND TECHNOLOGY CENTRE #3, 1st Main, Peenya Industrial Area, Phase 1, Bangalore 560 058, Tripura India
(72)**Name of Inventor :**
1)DEVAN, Sabarinathan
2)DIXIT, Ajay Kumar
3)KS, Nandakumar
4)CHITTUR, Lakshmanan Chandrasekharan
5)RADHAKRISHNAN, Yashwanth

(57) Abstract :
The present disclosure relates to a composition and methods for management of type 2 diabetes mellitus comprising a xanthonoid, and vitamin D. In particular, the present disclosure provides a composition comprising a Mangifera indica extract, and cholecalciferol that shows a synergistic effect compared to Mangifera indica extract or cholecalciferol alone. Further, the present disclosure relates to food supplements comprising of said composition for the management of type 2 diabetes mellitus.

No. of Pages : 23 No. of Claims : 10

(12) PATENT APPLICATION PUBLICATION
(19) INDIA
(22) Date of filing of Application :26/02/2014
(21) Application No.1558/CHENP/2014 A
(43) Publication Date : 08/05/2015

(54) Title of the invention : DEVICES FOR SENDING AND RECEIVING QUANTIZATION QUALITY FEEDBACK

(51) International classification :H04L25/03,H04B7/04,H04L1/00
(31) Priority Document No :61/532219
(32) Priority Date :08/09/2011
(33) Name of priority country :U.S.A.
(86) International Application No :PCT/US2012/054119
Filing Date :07/09/2012
(87) International Publication No :WO 2013/036741
(61) Patent of Addition to Application Number :NA
Filing Date :NA
(62) Divisional to Application Number :NA
Filing Date :NA

(71)**Name of Applicant :**
1)QUALCOMM INCORPORATED
Address of Applicant :Attn: International IP Administration 5775 Morehouse Drive San Diego California 92121 U.S.A.
(72)**Name of Inventor :**
1)GEIRHOFER Stefan
2)GAAL Peter

(57) Abstract :
A wireless communication device for sending quantization quality feedback is described. The wireless communication device includes a receiver that receives a signal. The wireless communication device also includes channel estimation circuitry coupled to the receiver. The channel estimation circuitry generates a channel estimate based on the signal. The wireless communication device also includes feedback determination circuitry coupled to the channel estimation circuitry. The feedback determination circuitry generates quantization quality feedback based on the channel estimate. The wireless communication device also includes a transmitter coupled to the feedback determination circuitry. The transmitter transmits the quantization quality feedback.

No. of Pages : 63 No. of Claims : 50

(12) PATENT APPLICATION PUBLICATION
(21) Application No.1609/CHENP/2014 A
(19) INDIA
(22) Date of filing of Application :28/02/2014
(43) Publication Date : 08/05/2015

(54) Title of the invention : NETWORK GATEWAY APPARATUS

(51) International classification :H04L12/46,H04L9/14
(31) Priority Document No :2011180215
(32) Priority Date :22/08/2011
(33) Name of priority country :Japan
(86) International Application No :PCT/JP2011/075963
Filing Date :10/11/2011
(87) International Publication No :WO 2013/027302
(61) Patent of Addition to Application Number :NA
Filing Date :NA
(62) Divisional to Application Number :NA
Filing Date :NA

(71)**Name of Applicant :**
1)INTO Co. Ltd.
Address of Applicant :2 37 5 Minamiotsuka Toshima ku Tokyo 1700005 Japan
(72)**Name of Inventor :**
1)OGAWA Keiko

(57) Abstract :
In the present invention a transmission origin MAC address a transmission origin IP address a transmission origin port number a destination MAC address a destination IP address and a destination port number which have been attached to a packet beforehand are temporarily stored in a rewrite table in order to allow the packet which should be unrelated to an IP address that has been assigned to an XPTCP gateway device (101) to be able to be processed by a TCP/IP protocol stack (205). Thereupon the transmission origin MAC address and the transmission origin IP address that are attached to the received packet are rewritten respectively to a fake MAC address and a fake IP address and the destination MAC address and the destination IP number attached to the same are rewritten respectively to an IP address and a MAC address which have been assigned to the XPTCP gateway device (101) before being imparted to the TCP/IP protocol stack (205).

No. of Pages : 81 No. of Claims : 12

(12) PATENT APPLICATION PUBLICATION
(19) INDIA
(22) Date of filing of Application :24/02/2014
(21) Application No.893/CHE/2014 A
(43) Publication Date : 08/05/2015

(54) Title of the invention : SYSTEM AND METHOD FOR OPERATING A POWER PLANT

(51) International classification :F01K
(31) Priority Document No :201320091797.1
(32) Priority Date :28/02/2013
(33) Name of priority country :China
(86) International Application No :NA
Filing Date :NA
(87) International Publication No : NA
(61) Patent of Addition to Application Number :NA
Filing Date :NA
(62) Divisional to Application Number :NA
Filing Date :NA

(71)**Name of Applicant :**
1)GENERAL ELECTRIC COMPANY
Address of Applicant :1 RIVER ROAD, SCHENECTADY, NEW YORK 12345 U.S.A.
(72)**Name of Inventor :**
1)HAO, YONGJIANG
2)ZHANG, HUA
3)WU, WENJIE

(57) Abstract :
A system including a fuel-supply system including, an auxiliary-fuel-gas compressor configured to compress a fuel for use by a gas-turbine system, an expander configured to generate power by expanding an oxidant from the gas-turbine system, and a motor/generator configured to function in a motor mode and in a generator mode, wherein the motor/generator drives fuel compression with the auxiliary fuel-gas compressor in the motor mode, and the motor/generator generates power in the generator mode as the expander uses oxidant from the gas-turbine system to drive the motor/generator

No. of Pages : 25 No. of Claims : 20

(12) PATENT APPLICATION PUBLICATION
(19) INDIA
(22) Date of filing of Application :21/02/2014
(21) Application No.1390/CHENP/2014 A
(43) Publication Date : 08/05/2015

(54) Title of the invention : SYSTEM AND METHOD FOR PROVIDING AND MANAGING MESSAGE QUEUES FOR MULTINODE APPLICATIONS IN A MIDDLEWARE MACHINE ENVIRONMENT

(51) International classification :G06F9/54
(31) Priority Document No :61/542119
(32) Priority Date :30/09/2011
(33) Name of priority country :U.S.A.
(86) International Application No :PCT/US2012/057634
Filing Date :27/09/2012
(87) International Publication No :WO 2013/049399
(61) Patent of Addition to Application Number :NA
Filing Date :NA
(62) Divisional to Application Number :NA
Filing Date :NA

(71)**Name of Applicant :**
1)ORACLE INTERNATIONAL CORPORATION
Address of Applicant :500 Oracle Parkway M/S 5op7 Redwood Shores California 94065 U.S.A.
(72)**Name of Inventor :**
1)FRANK Richard
2)LITTLE Todd
3)KAIMALETTU Arun
4)TOMINNA Leonard

(57) Abstract :
A middleware machine environment can provide message queues for multinode applications. The transactional middleware machine environment includes a message control data structure on a message receiver and a heap data structure in a shared memory that is associated with the message receiver. The message sender operates to write a message directly into the heap data structure and to maintain metadata associated with the message in the message control data structure. Furthermore the middleware machine environment includes a shared memory on a message receiver wherein the shared memory maintains one or more message queues for the middleware machine environment. Additionally the middleware machine environment includes a daemon process that is capable of creating at least one message queue in the shared memory when a client requests that the at least one message queue be set up to support sending and receiving messages.

No. of Pages : 32 No. of Claims : 40

CONTINUED TO PART- 2

(12) PATENT APPLICATION PUBLICATION
(21) Application No.1245/KOL/2013 A
(19) INDIA
(22) Date of filing of Application :31/10/2013
(43) Publication Date : 08/05/2015

(54) Title of the invention : A METHOD FOR MACHINING BUTTRESS THREAD OR ANY OTHER SIMILAR PROFILE THREAD WITH A SINGLE POINTCUTTING TOOL.

(51) International classification	:G05B 19/00
(31) Priority Document No	:NA
(32) Priority Date	:NA
(33) Name of priority country	:NA
(86) International Application No	:NA
Filing Date	:NA
(87) International Publication No	: NA
(61) Patent of Addition to Application Number	:NA
Filing Date	:NA
(62) Divisional to Application Number	:NA
Filing Date	:NA

(71)**Name of Applicant :**
1)BHARAT HEAVY ELECTRICALS LIMITED
Address of Applicant :REGIONAL OPERATIONS DIVISION (ROD), PLOT NO:9/1, DJ BLOCK 3RD FLOOR, KARUNAMOYEE, SALT LAKE CITY,KOLKATA 700091.
(72)**Name of Inventor :**
1)PAWAN KUMAR ARORA,
2)ROHIT PRATAP SINGH.
3)LOKESH JAIN
4)ISHAN DWIVEDI

(57) Abstract :
This invention relates to method for machining buttress thread or any other similar profile thread with a single point cutting tool. The said method comprises of selecting a standard single point cutting tool with pre selected radius and making a rough as well as a finishing program for making buttress thread for a predetermined component on a predetermined CNC machine wherein correction for deviation of actual cutting point and defined cutting point for a particular region, as represented by $\Delta Z = R + R \sin A$ in Z axis and $\Delta X = R - R \cos A$ in X-axis where R is the radius of the said tool and A is the angle of the thread with the horizontal is incorporated in the said rough and finish program when similar correction factors for different specified regions are introduced in the said program for achieving correct machining of the profile of the said thread on the said component.

No. of Pages : 33 No. of Claims : 3

(12) PATENT APPLICATION PUBLICATION
(21) Application No.1246/KOL/2013 A
(19) INDIA
(22) Date of filing of Application :31/10/2013
(43) Publication Date : 08/05/2015

(54) Title of the invention : AN IMPROVED PROCESS FOR PREPARATION OF BRIQUETTES FOR IRON MAKING FROM IRON ORE SLIME AND JHAMA COAL.

(51) International classification	:C22B 1/00
(31) Priority Document No	:NA
(32) Priority Date	:NA
(33) Name of priority country	:NA
(86) International Application No	:NA
Filing Date	:NA
(87) International Publication No	: NA
(61) Patent of Addition to Application Number	:NA
Filing Date	:NA
(62) Divisional to Application Number	:NA
Filing Date	:NA

(71)**Name of Applicant :**
1)TATA STEEL LIMITED
Address of Applicant :JAMSHEDPUR-831001,. Jharkhand India
2)COUNCIL OF SCIENTIFIC & INDUSTRIAL RESEARCH
(72)**Name of Inventor :**
1)T.VENUGOPALAN
2)Y.RAJSHEKAR
3)CHANDRA PRAKASH S
4)MANJUNATHAN M
5)Dr. SANJAY KUMAR
6)SIMANTA SARMA
7)Dr. J.PAL

(57) Abstract :
The invention relates to an improved process for preparation of briquettes for iron making from iron ore slime and jhama coal, comprising the steps of:- mixing iron ore slime, jhama coal and calcined lime fines in a ratio ranging between 90:0:10 and 60:30:10 or alternatively mixing iron oxide fines, jhama coal, calcined lime fines and cement in a ratio ranging between 90:0:10:0 and 60:30:0:10, in dry condition for a period of 5 to 15 minutes, mixing water in the mixture as obtained in step (a) in a ratio ranging between 5-16%; briquetting the mixture as obtained in step (b) into one of rectangular and cylindrical briquettes of varying size of bricks volume ranging between 8 cm3 to 250 cm3, with a pressure ranging between 50 kg/cm2 and 200 kg/cm2 ; curing the briquettes as obtained in step (c) under ambient condition for a period of 6 -12 hours; curing of the briquettes as obtained in step (d) in a closed humidified chamber under a humidity of 80-95% for 5-10 days; drying the briquettes as obtained in step (e) under ambient condition for a period of 2 to 6 days; breaking the briquettes to a size ranging between +10 and -50 mm; and characterizing the briquettes as obtained in step (e) through measurement of strength properties at high temperature, reducibility, reduction degradation index to evaluate its suitability in low shaft furnace or blast furnace.

No. of Pages : 14 No. of Claims : 7

(12) PATENT APPLICATION PUBLICATION
(21) Application No.1247/KOL/2013 A
(19) INDIA
(22) Date of filing of Application :31/10/2013
(43) Publication Date : 08/05/2015

(54) Title of the invention : A UNIVERSAL MEASURING DEVICE FOR CHECKING PROFILE ORIENTATION WITH RESPECT TO ROOT OF FIR TREE LP BLADES

(51) International classification	:G06F 1/00
(31) Priority Document No	:NA
(32) Priority Date	:NA
(33) Name of priority country	:NA
(86) International Application No	:NA
Filing Date	:NA
(87) International Publication No	: NA
(61) Patent of Addition to Application Number	:NA
Filing Date	:NA
(62) Divisional to Application Number	:NA
Filing Date	:NA

(71)**Name of Applicant :**
1)BHARAT HEAVY ELECTRICALS LIMITED
Address of Applicant :REGIONAL OPERATIONS DIVISION (ROD), PLOT NO.9/1, DJ BLOCK 3RD FLOOR, KARUNAMOYEE, SALTLAKE CITY,KOLKATA-700091.
(72)**Name of Inventor :**
1)SANJIV KUMAR
2)BISWAJIT DAS
3)VIJAY KUMAR CHUGH
4)RAVIKANT SAINI

(57) Abstract :
A universal measuring device (16) for checking profile orientation with respect to root of LP free standing blades comprising: a stand assembly (01) having a base plate (8) mounted on bottom support (7) containing plurality of pipe column (09), top plate (10) giving stability to the pipe column (09); a control segment holder (02) mounted on the column pipe (09) by clamp and fastener; control segment (03) (replica of fir tree root groove) mounted on the control segment holder (02), the control segment (03) holding the job (17) while checking, the template holder (04) are fixed in the column pipe (09) as per check sections, such that the template holder (4) holding the checking template (5) can slide up and down for checking the profile orientation of the blades (17).

No. of Pages : 14 No. of Claims : 6

(12) PATENT APPLICATION PUBLICATION
(21) Application No.1240/KOL/2013 A
(19) INDIA
(22) Date of filing of Application :30/10/2013
(43) Publication Date : 08/05/2015

(54) Title of the invention : A METHOD OF MANUFACTURING TRANSFORMER TANK TO REDUCE TRANSPORTABLE DIMENSIONS OF LARGE RATING POWER TRANSFORMER FOR SAFE AND ECONOMICALTRANSPORTATION.

(51) International classification	:H01F 27/00
(31) Priority Document No	:NA
(32) Priority Date	:NA
(33) Name of priority country	:NA
(86) International Application No	:NA
Filing Date	:NA
(87) International Publication No	: NA
(61) Patent of Addition to Application Number	:NA
Filing Date	:NA
(62) Divisional to Application Number	:NA
Filing Date	:NA

(71)**Name of Applicant :**
1)BHARAT HEAVY ELECTRICALS LIMITED
Address of Applicant :PLOT NO. 9/1, DJ BLOCK 3RD FLOOR KARUNAMOYEE, SALT LAKE CITY, KOLKATA 700091.
(72)**Name of Inventor :**
1)RAJENDRA KUMAR MOHAPATRA
2)RAHUL DIXIT

(57) Abstract :
The invention relates to a method of manufacturing transformer tank to reduce transportable dimensions of large rating power transformer for safe and economical transportation the transformer comprises a plurality of active components including the interconnecting components all of which being accommodated in a transformer tank filled with transformer oil such that all the active components at least remain submerged in the transformer oil to restrict rise in temperature of the transformer during operation within a threshold value, wherein a plurality of stiffeners are welded on the cover and side wall of the transformer tank to prevent deformation of the tank due to several types of stresses sustained by the transformer in operation. The plurality of stiffeners on the cover and side walls of the tank cover are formed with universal dimension and detachably attachable components to allow reduction of the transportable dimension including reduction in concentrated load of the transformer during transportation.

No. of Pages : 13 No. of Claims : 4

(12) PATENT APPLICATION PUBLICATION
(21) Application No.1241/KOL/2013 A
(19) INDIA
(22) Date of filing of Application :31/10/2013
(43) Publication Date : 08/05/2015

(54) Title of the invention : ARC DEFLECTING AND VENTILATION ASSEMBLY FOR ELECTRICAL ENCLOSURES AND SYSTEMS FOR ARC DEFLECTING AND VENTILATION

(51) International classification	:F24F 13/00
(31) Priority Document No	:NA
(32) Priority Date	:NA
(33) Name of priority country	:NA
(86) International Application No	:NA
Filing Date	:NA
(87) International Publication No	: NA
(61) Patent of Addition to Application Number	:NA
Filing Date	:NA
(62) Divisional to Application Number	:NA
Filing Date	:NA

(71)**Name of Applicant :**
1)SCHNEIDER ELECTRIC INDUSTRIES SAS
Address of Applicant :of 35, RUE JOSEPH MONIER,F-92500 RUEIL MALMAISON.
(72)**Name of Inventor :**
1)GAUTAM SHARMA
2)NITHIYIAPRAKASH JAGADEESWARAN
3)SIVA CHAVALI

(57) Abstract :
The present invention relates to an arc deflecting and ventilation assembly (100) comprising of a slotted unit (102), wire mesh arrangement (106) and an array of arc plates (108). The slotted unit(102) is provided with a plurality of slots (104) and is fixedly mounted to the electrical enclosure (109) and is provided with an open face (110), a closed face (112) and a wall structure (114). The arc deflecting and ventilation assembly (100) provides ventilation to the electrical enclosure (109) during normal conditions and also in an event of arcing.The present invention also provides systems (101) for arc deflecting and ventilation of hot gases generated within electrical enclosures (109).

No. of Pages : 29 No. of Claims : 22

(12) PATENT APPLICATION PUBLICATION
(19) INDIA
(22) Date of filing of Application :30/10/2014
(21) Application No.2429/KOLNP/2014 A
(43) Publication Date : 08/05/2015

(54) Title of the invention : METHODS, PACKAGING AND APPARATUS FOR COLLECTION OF BIOLOGICAL SAMPLES

(51) International classification :A61B10/00,B65D77/06
(31) Priority Document No :61/639,910
(32) Priority Date :28/04/2012
(33) Name of priority country :U.S.A.
(86) International Application No :PCT/US2013/032042
Filing Date :15/03/2013
(87) International Publication No :WO 2013/162756
(61) Patent of Addition to Application Number :NA
Filing Date :NA
(62) Divisional to Application Number :NA
Filing Date :NA

(71)**Name of Applicant :**
1)CYTOCORE, INC.
Address of Applicant :414 N. Orleans St., Ste 510, Chicago, Illinois 60654 UNITED STATES OF AMERICA
(72)**Name of Inventor :**
1)DOMANIK, Richard A.

(57) Abstract :
Methods, apparatus and compositions are disclosed for collection and transport of biological samples for testing and/or evaluation by a clinical laboratory. In particular, the disclosure relates to the self-collection of such samples by subjects providing the samples. Self-collection is necessary in some situations e.g. where a subjects religion prohibits being touched by a non-family member and subjects at great distance from medical facilities

No. of Pages : 47 No. of Claims : 10

(12) PATENT APPLICATION PUBLICATION
(19) INDIA
(22) Date of filing of Application :30/10/2014

(21) Application No.2430/KOLNP/2014 A
(43) Publication Date : 08/05/2015

(54) Title of the invention : DRIVE DEVICE OF AN ELEVATOR

(51) International classification :B66B5/02
(31) Priority Document No :20125596
(32) Priority Date :31/05/2012
(33) Name of priority country :Finland
(86) International Application No :PCT/FI2013/050543
Filing Date :20/05/2013
(87) International Publication No :WO 2013/178874
(61) Patent of Addition to Application Number :NA
Filing Date :NA
(62) Divisional to Application Number :NA
Filing Date :NA

(71)**Name of Applicant :**
1)KONE CORPORATION
Address of Applicant :Kartanontie 1, FI-00330 Helsinki FINLAND
(72)**Name of Inventor :**
1)KATTAINEN, Ari
2)RAASSINA, Pasi
3)SAARIKOSKI, Tapio
4)STOLT, Lauri
5)NAKARI, Arto
6)KALLIONIEMI, Antti

(57) Abstract :
The invention relates to the drive device (1) of an elevator. The drive device comprises a DC bus (2A, 2B), a motor bridge (3) connected to the DC bus for the electricity supply of the elevator motor (6), which motor bridge (3) comprises high-side (4A) and low-side (4B) switches for supplying electric power from the DC bus (2 A, 2B) to the elevator motor (6) when driving with the elevator motor (6), and also from the elevator motor (6) to the DC bus (2A, 2B) when braking with the elevator motor (6), a control circuit (5) of the motor bridge, with which control circuit the operation of the motor bridge (3) is controlled by producing control pulses in the control poles of the high-side (4A) and low-side (4B) switches of the motor bridge, a brake controller (7). which comprises a switch (8A, 8B) for supplying electric power, to the control coil (10) of an electromagnetic brake (9), a brake control circuit (11), with which the operation of the brake controller (7) is controlled by producing control, pulses in the control pole of the switch (8 A, 8B) of the brake controller, an input circuit (12) for the safety signal (13) to be disconnected/connected from outside the drive device, drive prevention logic (15), which is connected to the input circuit (12) and is configured to prevent the passage of control pulses to the control poles of the high- side (4 A) and/or Jow-side (4B) switches of the motor bridge when the safety signal (13) is disconnected, and also brake drop-out logic (16), which is connected to the input circuit (12) and is configured to prevent passage of the control pulses to the control pole of the switch (8A, 8B) of the brake controller when the safety signal (13) is disconnected.

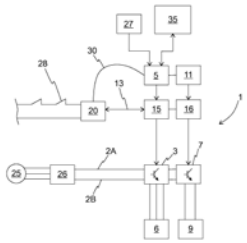

No. of Pages : 36 No. of Claims : 14

(12) PATENT APPLICATION PUBLICATION
(21) Application No.1248/KOL/2013 A
(19) INDIA
(22) Date of filing of Application :31/10/2013
(43) Publication Date : 08/05/2015

(54) Title of the invention : IMPROVED INLET OPENING OF THE EMPTY CHAMBER OF A FLUIDIZED BED HEAT EXCHANGER (FBHE) FOR UNIFORM AND SMOOTH FLOW DISTRIBUTION OF SOLID ASH PARTICLES INTO THE BUNDLE CHAMBER.

(51) International classification	:F23C 10/00
(31) Priority Document No	:NA
(32) Priority Date	:NA
(33) Name of priority country	:NA
(86) International Application No	:NA
Filing Date	:NA
(87) International Publication No	: NA
(61) Patent of Addition to Application Number	:NA
Filing Date	:NA
(62) Divisional to Application Number	:NA
Filing Date	:NA

(71)**Name of Applicant :**
1)BHARAT HEAVY ELECTRICALS LIMITED
Address of Applicant :REGIONAL OPERATIONS DIVISION (ROD), PLOT NO.9/1, DJ BLOCK 3RD FLOOR, KARUNAMOYEE, SALTLAKE CITY,KOLKATA-700091.
(72)**Name of Inventor :**
1)SACHIN KUMAR SHRIVASTAVA
2)MUKUNDARAJAN LAKSHMINARASIMHAN
3)ARUNACHALAM KANNAN

(57) Abstract :
An improved inlet opening of the empty chamber of a fluidized bed heat exchanger for uniform and smooth flow distribution of solid ash particles into the bundle chamber, comprising; an inlet opening unit (3) of predetermined dimensions (X, Y, Z and A, B, C) fixed to the empty chamber (1) at the bottom below the weir level (6) for allowing smooth and uniform ash transfer from sealpot to empty chamber (1) resisting backflow of gases from the said chamber wherein the novel configured inlet opening makes the ash from empty chamber to flow across the section uniformly ensuring admission of ash below the weir level (6).

No. of Pages : 12 No. of Claims : 2

(12) PATENT APPLICATION PUBLICATION
(21) Application No.1249/KOL/2013 A
(19) INDIA
(22) Date of filing of Application :31/10/2013
(43) Publication Date : 08/05/2015

(54) Title of the invention : METHOD FOR REDUCING HIGH STRESS ON THE VIBRATING MATERIAL HANDLING EQUIPMENT VIBRO FEEDER TO ARREST FAILURE BY CRACK.

(51) International classification	:G01M 3/00
(31) Priority Document No	:NA
(32) Priority Date	:NA
(33) Name of priority country	:NA
(86) International Application No	:NA
Filing Date	:NA
(87) International Publication No	: NA
(61) Patent of Addition to Application Number	:NA
Filing Date	:NA
(62) Divisional to Application Number	:NA
Filing Date	:NA

(71)**Name of Applicant :**
1)TATA STEEL LIMITED
Address of Applicant :RESEARCH AND DEVELOPMENT AND SCIENTIFIC SERVICES DIVISION, JAMSHEDPUR 831001, Bihar India
(72)**Name of Inventor :**
1)RAVINDRA KUMAR
2)BISWANATH NANDI

(57) Abstract :
The invention relates to a method of restricting the failure by crack of vibratory feeder used to feed coal to the stamp charging and pushing machine (SCP machine). The motor arrangement is fixed to motor mounting bracket (2) by bolting. The motor mounting bracket is welded to both side plates left and right (3, 4) along the weld lines (6) when the gusset plates are welded between side plate left (3) and mounting bracket (2) and side plate right (4) and mounting bracket (2) to arrest failure by crack along the weld lines (6).

No. of Pages : 14 No. of Claims : 2

(12) PATENT APPLICATION PUBLICATION
(19) INDIA
(22) Date of filing of Application :31/10/2014
(21) Application No.2438/KOLNP/2014 A
(43) Publication Date : 08/05/2015

(54) Title of the invention : INFUSION DEVICE

(51) International classification :A61M5/145
(31) Priority Document No :1250358-7
(32) Priority Date :10/04/2012
(33) Name of priority country :Sweden
(86) International Application No :PCT/EP2013/057326
Filing Date :08/04/2013
(87) International Publication No :WO 2013/153041
(61) Patent of Addition to Application Number :NA
Filing Date :NA
(62) Divisional to Application Number :NA
Filing Date :NA

(71)**Name of Applicant :**
1)CAREBAY EUROPE LTD
Address of Applicant :Suite 3, Tower Business Centre, Tower Street, Swatar, BKR 4013 MATLA
(72)**Name of Inventor :**
1)GIAMBATTISTA, Lucio
2)BENDEK, Antonio

(57) Abstract :
The present invention relates to an infusion device comprising a housing (10, 12); a compartment inside said housing for positioning a medicament container (78), an infusion needle (124) arranged to said housing, being connectable to said medicament container for delivering a dose of medicament, a piston plunger (72) arranged in said housing capable of acting on said medicament container for delivering a dose of medicament, mechanical drive means capable of acting on said piston plunger for delivering a dose of medicament. The invention is characterised in that said piston plunger comprises a number of distinct segments (82) being inter-connectable to each other for forming an elongated piston plunger.

No. of Pages : 53 No. of Claims : 13

(12) PATENT APPLICATION PUBLICATION
(19) INDIA
(22) Date of filing of Application :31/10/2014
(21) Application No.2439/KOLNP/2014 A
(43) Publication Date : 08/05/2015

(54) Title of the invention : SINTERING DEVICE AND SINTERING METHOD USING INDUCTION HEATING

(51) International classification :C22B1/16,F27B21/08,B22F3/10
(31) Priority Document No :10-2012-0044843
(32) Priority Date :27/04/2012
(33) Name of priority country :Republic of Korea
(86) International Application No :PCT/KR2013/003462
Filing Date :23/04/2013
(87) International Publication No:WO 2013/162253
(61) Patent of Addition to Application Number :NA
Filing Date :NA
(62) Divisional to Application Number :NA
Filing Date :NA

(71)**Name of Applicant :**
1)POSCO
Address of Applicant :(Goedong dong) 6261, Donghaean-ro, Nam-gu Pohang-si Gyeongsangbuk-do 790-300 REPUBLIC OF KOREA
(72)**Name of Inventor :**
1)KANG, Young Ju
2)JU, Dong Seon
3)SHIN, Dong Yeop
4)SEO, Jeong Do

(57) Abstract :
Disclosed are a sintering device and a sintering method using induction heating, wherein a raw ore can be heated by inducing the heating of a highly conductive material included in the raw ore through magnetic inductance of an induction coil. The sintering device using induction heating of the present invention manufactures a sintered ore by inductively heating a raw ore, comprising: an induction case; and a heat inducing body which is mounted in the induction case and induces, through magnetic induction, the heating of the raw ore that is accommodated within the induction case or penetrates the induction case.

No. of Pages : 33 No. of Claims : 16

(12) PATENT APPLICATION PUBLICATION
(19) INDIA
(22) Date of filing of Application :31/10/2014
(21) Application No.2440/KOLNP/2014 A
(43) Publication Date : 08/05/2015

(54) Title of the invention : DEVICE, SYSTEM AND METHOD FOR IMMOBILIZATION OF A HUMAN'S BODY PART

(51) International classification :A61B6/04,A61F5/37,A61N5/10
(31) Priority Document No :NL1039586
(32) Priority Date :08/05/2012
(33) Name of priority country :Netherlands
(86) International Application No :PCT/EP2013/059644
Filing Date :08/05/2013
(87) International Publication No :WO 2013/167689
(61) Patent of Addition to Application Number :NA
Filing Date :NA
(62) Divisional to Application Number :NA
Filing Date :NA

(71)**Name of Applicant :**
1)DYNAMIC SYSTEMS HOLDING BV
Address of Applicant :Zuidbaan 578, NL-2841 MD Moordrecht NETHERLANDS
(72)**Name of Inventor :**
1)DE MOOIJ, Leendert Gerrit

(57) Abstract :
The present invention provides a system for immobilization of a patient body part for radiotherapy applications comprising: a device comprising at least one flanged support member which is suitable to be mounted to a fixation surface and is adapted to receive and retain at least two sheets; a first sheet for covering the anatomical contours of a first area of said body part, and a second sheet for covering the anatomical contours of a second area of said body part which is not covered by the first sheet; whereby the system is adapted for supporting the immobilized body part free from the fixation surface by the two sheets and the device.

No. of Pages : 79 No. of Claims : 14

(12) PATENT APPLICATION PUBLICATION
(21) Application No.2441/KOLNP/2014 A
(19) INDIA
(22) Date of filing of Application :31/10/2014
(43) Publication Date : 08/05/2015

(54) Title of the invention : METHOD IN MANUAL WELDING

(51) International classification :B23K9/095,B23K9/32
(31) Priority Document No :20125557
(32) Priority Date :25/05/2012
(33) Name of priority country :Finland
(86) International Application No :PCT/FI2013/050577
Filing Date :27/05/2013
(87) International Publication No :WO 2013/175079
(61) Patent of Addition to Application Number :NA
Filing Date :NA
(62) Divisional to Application Number :NA
Filing Date :NA

(71)**Name of Applicant :**
1)KEMPPI OY
Address of Applicant :Kempinkatu 1, FI-15710 Lahti FINLAND
(72)**Name of Inventor :**
1)JERNSTRÖM, Petteri
2)TIILIKKA, Vesa
3)MÄKI, Markku
4)VEIKKOLAINEN, Mikko

(57) Abstract :
The object of the invention is a method, in which a welder, using a welding device (100), performs a welding operation on an object to be welded (104). In the method, a welding device (100) is utilized, comprising a data collection device (110), which can be connected through a data network to a server (120) for fetching and sending information, and which data collection device (110) comprises a memory for saving information and for storing the saved information. In the method, an identification individualizing the welder and at least one piece of information corresponding to the identification are arranged, the identification is read using the data collection device (110) and the identification and the at least one piece of information are fetched from the server or from the data collection device. In the method, a welding instruction identification for the welding operation and at least one piece of information from the welding instruction, corresponding to the identification, are arranged, the identification is read using the data collection device (110) and the identification and the at least one piece of information corresponding to the identification are fetched from the server or from the data collection device. In the method, the data collection device collects from the welding device information and/or readings about the welding operation, and saves in the memory the information and/or readings about the welding operation, that it has collected, along with the time of occurrence associated with them, and which method comprises an information consolidation step, in which the identifications fetched before starting the welding operation and the information and/or readings about the welding operation collected and saved during the welding operation are combined such, that they form an information package individualizing the welding operation. The object of the invention is also an arrangement in manual welding.

No. of Pages : 29 No. of Claims : 15

(12) PATENT APPLICATION PUBLICATION
(19) INDIA
(22) Date of filing of Application :31/10/2014

(21) Application No.2442/KOLNP/2014 A
(43) Publication Date : 08/05/2015

(54) Title of the invention : MOBILE STATION

(51) International classification :H04W72/04,H04W56/00,H04W88/02
(31) Priority Document No :2012-174141
(32) Priority Date :06/08/2012
(33) Name of priority country :Japan
(86) International Application No :PCT/JP2013/070547
Filing Date :30/07/2013
(87) International Publication No :WO 2014/024725
(61) Patent of Addition to Application Number :NA
Filing Date :NA
(62) Divisional to Application Number :NA
Filing Date :NA

(71)**Name of Applicant :**
1)NTT DOCOMO, INC.
Address of Applicant :11-1, Nagatacho 2-chome, Chiyoda-ku, Tokyo 1006150 JAPAN
(72)**Name of Inventor :**
1)UCHINO, Tooru
2)TAKAHASHI, Hideaki
3)AOYAGI, Kenichiro

(57) Abstract :
To appropriately select a timing reference cell and a Path loss reference cell for an sCell inside an sTAG. In this mobile station (UE), a second management unit (11B) is configured such that a UL Cell that is managed associated with a DL only Cell that performs downlink communications only is used as a Pcell or an Scell inside a pTAG.

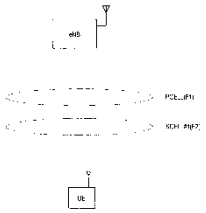

No. of Pages : 24 No. of Claims : 1

(12) PATENT APPLICATION PUBLICATION
(21) Application No.2443/KOLNP/2014 A
(19) INDIA
(22) Date of filing of Application :31/10/2014
(43) Publication Date : 08/05/2015

(54) Title of the invention : DEVICE FOR DISPENSING A MIXTURE, PREFERABLY FOAM

(51) International classification :B05B7/00,B05B11/04,B05B15/00
(31) Priority Document No :VI2012A000100
(32) Priority Date :26/04/2012
(33) Name of priority country :Italy
(86) International Application No :PCT/IB2013/000716
Filing Date :17/04/2013
(87) International Publication No :WO 2013/160741
(61) Patent of Addition to Application Number :NA
Filing Date :NA
(62) Divisional to Application Number :NA
Filing Date :NA

(71)**Name of Applicant :**
1)TAPLAST S.P.A.
Address of Applicant :Via Marosticana, 65/67, I-36031 Dueville - Povolaro (VI) ITALY
(72)**Name of Inventor :**
1)SANTAGIULIANA, Evans

(57) Abstract :
The present invention is a device (10; 110; 210; 310) for dispensing a mixture (S), suited to be applied to a container (C) holding a first fluid (F1) and a second fluid (F2) suited to be mixed in order to obtain a mixture (S), comprising: a first body (13); a second body (32) associated with the first body (13); a mixing chamber (12) defined at least partially in the first body (31) and/or in the second body (32); a first delivery duct (C1) suited to convey the first fluid (F1) towards the mixing chamber (12); a second delivery duct (C2) suited to convey the second fluid (F2) towards the mixing chamber (12); a thin tube (38) suited to define at least partially the first duct (C1) and comprising an end portion (39) connected to the first or the second body (31, 32). The end portion (39) of the thin tube (38) is connected to the first body (31) or the second body (32) so as to define for the first fluid (F1) a main advance direction (D1) that belongs to a longitudinal axis (X) that intersects the mixing chamber (12). The invention furthermore concerns a system (1) for dispensing a mixture (S).

No. of Pages : 39 No. of Claims : 16

(12) PATENT APPLICATION PUBLICATION
(19) INDIA
(22) Date of filing of Application :30/10/2013
(21) Application No.1233/KOL/2013 A
(43) Publication Date : 08/05/2015

(54) Title of the invention : DEFLECTOR FOR SUNROOF APPARATUS.

(51) International classification	:B60J7/22, B60J7/043
(31) Priority Document No	:NA
(32) Priority Date	:NA
(33) Name of priority country	:NA
(86) International Application No	:NA
Filing Date	:NA
(87) International Publication No	: NA
(61) Patent of Addition to Application Number	:NA
Filing Date	:NA
(62) Divisional to Application Number	:NA
Filing Date	:NA

(71)**Name of Applicant :**
1)NISSAN MOTOR CO., LTD.
Address of Applicant :2,TAKARA-CHO, KANAGAWA-KU, YOKOHAMA-SHI, KANAGAWA 221-0023.
(72)**Name of Inventor :**
1)MITSURU SATOU
2)KAZUYA ASAO
3)HIROTAKA TOMITA
4)BABU VISWANATHAN

(57) Abstract :
Provided is a deflector extending along the front edge of an opening provided in the roof of a vehicle. The deflector includes: multiple recessed portions each being formed to be recessed away from the front, and multiple projected portions each being formed to be projected further toward the front than the recessed portions. The recessed portions and the projected portions are arranged at the front surface of the deflector alternately in the extending direction of the deflector.

No. of Pages : 27 No. of Claims : 5

(12) PATENT APPLICATION PUBLICATION
(21) Application No.2455/KOLNP/2014 A
(19) INDIA
(22) Date of filing of Application :03/11/2014
(43) Publication Date : 08/05/2015

(54) Title of the invention : WASTEWATER TREATMENT SYSTEM AND TREATMENT METHOD THEREFOR

(51) International classification :C02F3/34,C12N1/20
(31) Priority Document No :2012-105977
(32) Priority Date :07/05/2012
(33) Name of priority country :Japan
(86) International Application No :PCT/JP2013/062780
Filing Date :02/05/2013
(87) International Publication No :WO 2013/168680
(61) Patent of Addition to Application Number :NA
Filing Date :NA
(62) Divisional to Application Number :NA
Filing Date :NA

(71)**Name of Applicant :**
1)TAISEI-KIGYO CO., LTD.
Address of Applicant :4-8, Nishishinjuku 6-chome, Shinjuku-ku, Tokyo 1600023 JAPAN
2)FUJI ELECTRIC CO., LTD.
(72)**Name of Inventor :**
1)KOJIMA Makoto

(57) Abstract :
This wastewater treatment system comprises: an anaerobic region to which wastewater that has not passed through a sedimentation tank, i.e., wastewater in which solids having a small size and a low specific gravity are contained as such without being separated therefrom as raw sludge, is supplied first; and an oxygen-free region and an aerobic region which have been consecutively formed by causing the regions to communicate with each other through the openings of a partition as channels. In the system and method, the percentage of return sludge is kept at 30-60%, the concentration of active sludge (mixed liquor suspended solid (MLSS)) is kept at 2,600-5,000 mg/L, excluding 5,000 mg/L, and the concentration of bacteria belonging to the genus Bacillus is kept at 108-1010 cells/mL.

No. of Pages : 60 No. of Claims : 8

(12) PATENT APPLICATION PUBLICATION
(19) INDIA
(22) Date of filing of Application :03/11/2014

(21) Application No.2456/KOLNP/2014 A
(43) Publication Date : 08/05/2015

(54) Title of the invention : SYSTEM AND METHOD FOR CARBON DIOXIDE CAPTURE AND SEQUESTRATION

(51) International classification :F25J3/08,B01D53/62,B01D53/02
(31) Priority Document No :61/643,103
(32) Priority Date :04/05/2012
(33) Name of priority country :U.S.A.
(86) International Application No :PCT/US2013/039534
Filing Date :03/05/2013
(87) International Publication No :WO 2013/166432
(61) Patent of Addition to Application Number :NA
Filing Date :NA
(62) Divisional to Application Number :NA
Filing Date :NA

(71)**Name of Applicant :**
1)EISENBERGER, Peter
Address of Applicant :170 Brooks Bend, Princeton, NJ 08540 UNITED STATES OF AMERICA
(72)**Name of Inventor :**
1)EISENBERGER, Peter

(57) Abstract :
A system and method of reducing the net carbon dioxide footprint of an industrial process that generates power from the combustion of hydrocarbon fuels in which ambient air is admixed with up to 50% by volume of an effluent gas from the power generator of the industrial process, in order to substantially increase the CO2 concentration in the air prior to treatment. The treatment comprises adsorbing CO2 from the admixed ambient air utilizing a cooled, porous substrate-supported amine adsorbent, wherein the porous substrate initially contacts the mixed ambient air containing condensed water in its pores, which act as an intrinsic coolant with respect to the exothermic heat generated by the adsorption process. In addition, prior to regenerating the supported adsorbent, air pressure is substantially reduced in the sealed regeneration chamber and the low pressure chamber is placed in fluid connection with a higher pressure regeneration chamber containing steam and carbon dioxide, to preheat the sorbent to be regenerated and to quickly cool the regenerated sorbent prior to use for further CO2 adsorption.

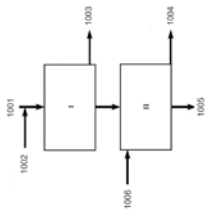

No. of Pages : 58 No. of Claims : 18

(12) PATENT APPLICATION PUBLICATION
(19) INDIA
(22) Date of filing of Application :03/11/2014
(21) Application No.2457/KOLNP/2014 A
(43) Publication Date : 08/05/2015

(54) Title of the invention : CARD GAME WITH SUPPLEMENTARY BETTING OPTION

(51) International classification :G06Q50/34
(31) Priority Document No :2012901316
(32) Priority Date :03/04/2012
(33) Name of priority country :Australia
(86) International Application No :PCT/AU2013/000342
Filing Date :03/04/2013
(87) International Publication No :WO 2013/149297
(61) Patent of Addition to Application Number :NA
Filing Date :NA
(62) Divisional to Application Number :NA
Filing Date :NA

(71)**Name of Applicant :**
1)DAVIS Cory
Address of Applicant :Unit 2/130-140 Mitchell Road, Alexandria, New South Wales 2015 AUSTRALIA
(72)**Name of Inventor :**
1)THOMAS, Rowland

(57) Abstract :
A card game in which a player or banker is dealt a first hand formed from at least two cards, wherein the banker or player can make a wager on the first hand before the hands are dealt; dealing at least a third card for each of said player and banker hands to form a new hand on which a player is able to place a. bet/wager during game play on the effect of said third card dealt irrespective of whether or not the player wagered tin said first hands.

No. of Pages : 40 No. of Claims : 50

(12) PATENT APPLICATION PUBLICATION
(21) Application No.**2458/KOLNP/2014** A
(19) INDIA
(22) Date of filing of Application :03/11/2014
(43) Publication Date : 08/05/2015

(54) Title of the invention : HOLDER FOR PRESSURE INFUSION EQUIPMENT

(51) International classification	:A61M5/142,A61M5/155,A61M5/148
(31) Priority Document No	:20120119
(32) Priority Date	:12/04/2012
(33) Name of priority country	:Finland
(86) International Application No	:PCT/FI2013/000018
Filing Date	:11/04/2013
(87) International Publication No	:WO 2013/153254
(61) Patent of Addition to Application Number	:NA
Filing Date	:NA
(62) Divisional to Application Number	:NA
Filing Date	:NA

(71)**Name of Applicant :**
1)HEIKKINEN, Paavo
Address of Applicant :Metsurintie 27 C 30, 70150 Kuopio FINLAND
(72)**Name of Inventor :**
1)HEIKKINEN, Paavo

(57) Abstract :
According to the invention the pressure solution of infusion holder to the present type mobile rack rollers drop the use of the disadvantages can be avoided. Figure 1 the pressure solution of infusion holder (1) is ergonomically to fit to the shape of the shoulders in the collar (2, 3) comprises a holder (1) integrally with the pressure tank (2) and the infusion solution contained the tank (3). Since the infusion solution containing tank (3) is located on the patients shoulders and the slope close to the infusion solution the feed point, there have to be the sufficient pressure in the tank (3) to the successful infusion. Therefore, the collars (2,3) pressure tank (2) is pressurized by the element (5), whereby the pressure tank (2) is pressing the solution tank (3) and receive the necessary pressure at the time of infusion. The pressurization of the pressure tank (2) in the present invention is shown in the cheapest way by pumping with a manual pressure element (5), such as a ball pump. Pressurization can also be made for example by an electric pump.

No. of Pages : 9 No. of Claims : 8

(12) PATENT APPLICATION PUBLICATION
(19) INDIA
(22) Date of filing of Application :03/11/2014
(21) Application No.2471/KOLNP/2014 A
(43) Publication Date : 08/05/2015

(54) Title of the invention : WEIGHING DEVICE FOR PIECE GOODS

(51) International classification :G01G19/03,G01G21/00,B01J37/02
(31) Priority Document No :12166054.2
(32) Priority Date :27/04/2012
(33) Name of priority country :EPO
(86) International Application No :PCT/EP2013/058732
Filing Date :26/04/2013
(87) International Publication No :WO 2013/160451
(61) Patent of Addition to Application Number :NA
Filing Date :NA
(62) Divisional to Application Number :NA
Filing Date :NA

(71)**Name of Applicant :**
1)UMICORE AG & CO. KG
Address of Applicant :Rodenbacher Chaussee 4, 63457 Hanau GERMANY
(72)**Name of Inventor :**
1)GEMPP, Joachim

(57) Abstract :
The invention relates to a weighing device and a method for using same for piece goods, comprising a belt conveyor and at least one weighing scale that is arranged below said belt conveyor and has a support for the goods to be weighed. Said weighing scale has a rigid arrangement, the belt conveyor comprises at least two conveyor belts, the support for the goods to be weighed is provided with at least one support extension that can be guided through between the conveyor belts of the belt conveyor, and the conveyor belts of the belt conveyor can be moved towards the weighing scale such that the support extensions are guided through between the conveyor belts without moving themselves, and piece goods that are moved on the conveyor belts can be laid upon the support extensions and weighed by the weighing scale. The belt conveyor unit arranged above the weighing scale can be moved, in its entirety, towards said weighing scale, the end positions of the movement of the belt conveyor are damped, the belt conveyor is moved by a single actuator, and at least two weighing scales are used that have different weighing regions. The invention also relates to a coating installation for carriers of car exhaust gas catalysts, comprising a corresponding weighing device.

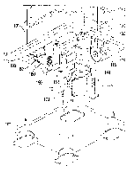

No. of Pages : 38 No. of Claims : 16

(12) PATENT APPLICATION PUBLICATION
(19) INDIA
(22) Date of filing of Application :03/11/2014
(21) Application No.2472/KOLNP/2014 A
(43) Publication Date : 08/05/2015

(54) Title of the invention : BRAKE SYSTEM AND BRAKING METHOD FOR AN ELECTRICALLY ACTUATED NONLINEAR FRICTION BRAKE

(51) International classification :B60T1/06,B60T8/171,B60T8/172
(31) Priority Document No :A50129/2012
(32) Priority Date :12/04/2012
(33) Name of priority country :Austria
(86) International Application No :PCT/EP2013/057192
Filing Date :05/04/2013
(87) International Publication No :WO 2013/152998
(61) Patent of Addition to Application Number :NA
Filing Date :NA
(62) Divisional to Application Number :NA
Filing Date :NA

(71)**Name of Applicant :**
1)VE VIENNA ENGINEERING FORSCHUNGS- UND ENTWICKLUNGS GMBH
Address of Applicant :Heiligenstädter Lände 29/5, A-1190 Wien AUSTRIA
(72)**Name of Inventor :**
1)PUTZ, Michael

(57) Abstract :
In an electrically actuated friction brake (1) with a nonlinear force-distance behaviour, in which an actuating part of a pressing device (10) is rotated for braking by an actuating means (20) between an initial actuating angle (αA) and a final actuating angle (αE) in order to press a brake lining (6) against a friction surface to generate a braking torque (TB), the influence of the brake lining elasticity, which changes due to wear, cannot be ignored. The thereby changing force-distance behaviour of the friction brake (1) is compensated by adjusting the initial actuating angle (αA) of the actuating part for the friction brake (1) on the basis of the current wear state of the brake lining (6).

No. of Pages : 20 No. of Claims : 6

(12) PATENT APPLICATION PUBLICATION
(21) Application No.2474/KOLNP/2014 A
(19) INDIA
(22) Date of filing of Application :03/11/2014
(43) Publication Date : 08/05/2015

(54) Title of the invention : SYSTEM AND METHOD FOR PREDICTION OF SNAP-THROUGH BUCKLING OF FORMED STEEL SHEET PANELS

(51) International classification :G06F17/50
(31) Priority Document No :13/442,166
(32) Priority Date :09/04/2012
(33) Name of priority country :U.S.A.
(86) International Application No :PCT/US2013/035696
Filing Date :09/04/2013
(87) International Publication No :WO 2013/155026
(61) Patent of Addition to Application Number :NA
Filing Date :NA
(62) Divisional to Application Number :NA
Filing Date :NA

(71)**Name of Applicant :**
1)ARCELORMITTAL INVESTIGACIÓN Y DESARROLLO, S.L.
Address of Applicant :CL/Cha varri, 6, E-48910 Sestao, Bizkaia UNITED STATES OF AMERICA
(72)**Name of Inventor :**
1)SADAGOPAN, Sriram
2)LANZI, Oscar

(57) Abstract :
A simplified tool is provided for simultaneous prediction of dent resistance and snap-through buckling resistance of roof panels (12,30) including the effect of roof bow placement, curvatures (R1,R2) of the roof panel (12,30), thickness of the roof (12,30), and steel grade. In one embodiment, a method of predicting snap-through buckling resistance of a sheet metal panel (12) to an applied load (26) under localized loading conditions is provided, wherein the sheet panel (12) has certain defined geometries. The method includes the steps of: identifying first and second principal radii of curvature (R1,R2) of the panel (12); identifying a thickness (t) of the panel (12); identifying the distance (L2) of a portion of the panel between structural supports (32); creating a mathematical function to determine load deflection behavior for snap-through buckling; and determining the likelihood of the panel (12) to display snap-through buckling characteristics under various localized applied loads (26) by inputting the parameters.

No. of Pages : 38 No. of Claims : 21

(12) PATENT APPLICATION PUBLICATION
(19) INDIA
(22) Date of filing of Application :03/11/2014
(21) Application No.2475/KOLNP/2014 A
(43) Publication Date : 08/05/2015

(54) Title of the invention : NOVEL SEPARATED BACILLUS LICHENIFORMIS AND PROBIOTICS USING SAME

(51) International classification :C12N1/20,A23K1/16,C02F3/34
(31) Priority Document No :10-2012-0035434
(32) Priority Date :05/04/2012
(33) Name of priority country :Republic of Korea
(86) International Application No :PCT/KR2013/002829
Filing Date :04/04/2013
(87) International Publication No :WO 2013/151364
(61) Patent of Addition to Application Number :NA
Filing Date :NA
(62) Divisional to Application Number :NA
Filing Date :NA

(71)**Name of Applicant :**
1)CJ CHEILJEDANG CORPORATION
Address of Applicant :500 Namdaemunro 5-ga, Jung-gu, Seoul 100-749 REPUBLIC OF KOREA
(72)**Name of Inventor :**
1)BACK, Seung Hee
2)YANG, Si Yong
3)WOO, Seo Hyung
4)SEO, Hyo Seel

(57) Abstract :
The present invention relates to a novel Bacillus licheniformis CJMPB283 (accession number KCCM11270P), which produces digestive enzymes and is capable of oxidizing ammonia and nitrous acid, and to a use of same.

No. of Pages : 38 No. of Claims : 6

(12) PATENT APPLICATION PUBLICATION
(21) Application No.2476/KOLNP/2014 A
(19) INDIA
(22) Date of filing of Application :03/11/2014
(43) Publication Date : 08/05/2015

(54) Title of the invention : STRUCTURAL MEMBER USED FOR RAINWATER STORAGE LAMINATED STRUCTURE

(51) International classification :E03B3/03,E03B11/14,E03F1/00
(31) Priority Document No :2012-086822
(32) Priority Date :05/04/2012
(33) Name of priority country :Japan
(86) International Application No :PCT/JP2013/059991
Filing Date :01/04/2013
(87) International Publication No :WO 2013/151020
(61) Patent of Addition to Application Number :NA
Filing Date :NA
(62) Divisional to Application Number :NA
Filing Date :NA

(71)**Name of Applicant :**
1)SEKISUI TECHNO MOLDING CO., LTD.
Address of Applicant :3-17, Toranomon 2-Chome, Minato-Ku, Tokyo 1058450 JAPAN
(72)**Name of Inventor :**
1)HARADA, Fumio

(57) Abstract :
The present invention is a structural member for constructing a rainwater storage laminated structure by vertically stacking the structural members while crossing the structural members at right angles in a water storage tank provided under the ground, the structural member enabling accurate and stable stacking to thereby obtain a water storage laminated structure with a small number of tiers but a large rainwater storage capacity. A structural member (1) has a structure in which hollow truncated quadrangular pyramids (2) each formed by providing an inclined surrounding wall plate (2b) along four edges of a rectangular top wall plate (2a) are arranged side by side longitudinally and laterally with the lower ends thereof coupled to each other via a bottom plate portion (3a) having a constant width, protruding portions (4, 4) are provided to protrude on both ends of the top wall plate (2a) to support the lower ends of both-side inclined wall plate portions of the truncated quadrangular pyramid (2) of the upper-side structural member (1) on the top wall plate (2a) of the lower-side structural member (1), the lower ends are locked to the opposite inner surfaces of the lower ends of the protruding portions (4, 4) to catch a load from above, and further an engagement recessed portion (5) that is put on the protruding portions (4, 4) of the structural member (1) disposed on the lower side to thereby prevent the structural member (1) from randomly moving longitudinally and laterally is provided in the bottom plate portion (3a).

No. of Pages : 51 No. of Claims : 6

(12) PATENT APPLICATION PUBLICATION
(19) INDIA
(22) Date of filing of Application :03/11/2014
(21) Application No.2477/KOLNP/2014 A
(43) Publication Date : 08/05/2015

(54) Title of the invention : RETRACTABLE PROJECTION SCREEN

(51) International classification :G03B21/58
(31) Priority Document No :12/53923
(32) Priority Date :27/04/2012
(33) Name of priority country :France
(86) International Application No :PCT/FR2013/000115
Filing Date :25/04/2013
(87) International Publication No :WO 2013/160573
(61) Patent of Addition to Application Number :NA
Filing Date :NA
(62) Divisional to Application Number :NA
Filing Date :NA

(71)**Name of Applicant :**
1)VASSARDS, Jean-Marc
Address of Applicant :Le Palastre B 6 rue Armand Schwartz CH-2800 Delémont SWITZERLAND
2)MIGGIANO, ROBERT
(72)**Name of Inventor :**
1)MIGGIANO, Robert

(57) Abstract :
The invention relates to a screen device (10) having a casing (11), a projection screen (12) and a setting (13) associated with displacement means (20) for modifying the visible content of the casing. It is characterized in that the projection screen (12) and the setting (13) are combined on a unitary support sheet (14) and said displacement means (20) comprise two parallel winding rollers (21, 22), about which said support sheet (14) is wound, one of these rollers being a motorized driving roller. It furthermore comprises stiffening means (50) associated with the two free edges (14a) of said support sheet (14) in order to stiffen them in the winding direction of said sheet and to confer perfect flatness on said sheet over its entire surface area, and also guide means (60) for said free edges (14a) of the support sheet (14), which are associated with the stiffening means (50).

No. of Pages : 23 No. of Claims : 18

(12) PATENT APPLICATION PUBLICATION
(19) INDIA
(22) Date of filing of Application :03/11/2014
(21) Application No.2478/KOLNP/2014 A
(43) Publication Date : 08/05/2015

(54) Title of the invention : WIND ENERGY SYSTEM AND METHOD FOR USING SAME

(51) International classification :F03D1/04,F03D1/06,F03D11/02
(31) Priority Document No :61/639,952
(32) Priority Date :29/04/2012
(33) Name of priority country :U.S.A.
(86) International Application No :PCT/IB2013/001158
Filing Date :27/04/2013
(87) International Publication No:WO 2013/164695
(61) Patent of Addition to Application Number :NA
Filing Date :NA
(62) Divisional to Application Number :NA
Filing Date :NA

(71)**Name of Applicant :**
1)LGT ADVANCED TECHNOLOGY LIMITED
Address of Applicant :Woodside, Mill Road, Cromer, Norfolk NR27 0BG UNITED KINGDOM.
(72)**Name of Inventor :**
1)BLAKE, Timothy
2)RYTON, George, Harold
3)MANSIR, Hassan
4)HEMINGWAY, Nicholas, James

(57) Abstract :
A wind energy system comprising a wind turbine comprising a cowling surrounded by a diffuser and a plurality id inner rotor blades located inside of the cowling that rotate about an inner bub, a plurality of outer rotor blades positioned between the diffuser and the cowling that are counter-rotating relative to the plurality of inner rotor blades, a drive mechanism located within £h.e inner rotor hub, a dynamic telescopic tower, and a tower support that connects the wind turbine to the dynamic telescopic tower.

No. of Pages : 71 No. of Claims : 6

(12) PATENT APPLICATION PUBLICATION
(19) INDIA
(22) Date of filing of Application :03/11/2014

(21) Application No.2479/KOLNP/2014 A
(43) Publication Date : 08/05/2015

(54) Title of the invention : HIGH CAPACITY WIRELESS COMMUNICATIONS SYSTEMS AND METHODS

(51) International classification :H04W88/08
(31) Priority Document No :1254139
(32) Priority Date :04/05/2012
(33) Name of priority country :France
(86) International Application No :PCT/EP2013/059236
Filing Date :03/05/2013
(87) International Publication No :WO 2013/164445
(61) Patent of Addition to Application Number :NA
Filing Date :NA
(62) Divisional to Application Number :NA
Filing Date :NA

(71)**Name of Applicant :**
1)E-BLINK
Address of Applicant :3-5 rue Marcel Pagnol, F-91800 Boussy St Antoine FRANCE
(72)**Name of Inventor :**
1)BLANC, Stèphane
2)BELLOT, Laurent
3)BITTAR, Christian
4)BOUKOUR, Tariq
5)ELSAYED, Jawad
6)PLUMECOQ, Jean-Christophe
7)ROLLAND, Alain

(57) Abstract :
Systems and methods for efficiently transmitting information over a wireless network segment are provided herein. An exemplary method (600) may include separating (605), via a transmitter, digital fronthaul data into general information and radio signal information, transmitting (620) the general information over the wireless network segment from the transmitter to a receiver on a first communications channel, and transmitting (615) the radio signal information over the wireless network segment from the transmitter to the receiver on a second communications channel.

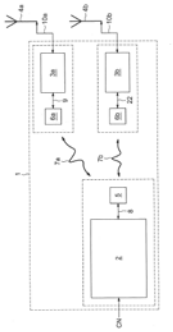

No. of Pages : 39 No. of Claims : 23

(12) PATENT APPLICATION PUBLICATION
(21) Application No.2480/KOLNP/2014 A
(19) INDIA
(22) Date of filing of Application :03/11/2014
(43) Publication Date : 08/05/2015

(54) Title of the invention : APPARATUS FOR FEEDING CAPSULES

(51) International classification :A61J3/07
(31) Priority Document No :BO2012A000249
(32) Priority Date :08/05/2012
(33) Name of priority country :Italy
(86) International Application No :PCT/IB2013/053651
Filing Date :07/05/2013
(87) International Publication No :WO 2013/168086
(61) Patent of Addition to Application Number :NA
Filing Date :NA
(62) Divisional to Application Number :NA
Filing Date :NA

(71)**Name of Applicant :**
1)I.M.A. INDUSTRIA MACCHINE AUTOMATICHE S.P.A.
Address of Applicant :Via Emilia 428-442, I-40064 Ozzano dell'Emilia (BO) ITALY
(72)**Name of Inventor :**
1)TREBBI, Roberto
2)CONSOLI, Fabrizio Salvatore
3)RIBANI, Massimo

(57) Abstract :
An apparatus for feeding capsules (100) to a transferring wheel (210) of a filling machine (200) comprises a store (2) for containing the capsules (100); first feeding conduits (3) spaced apart along a first direction (X) for drawing the capsules (100) from the store (2) and conveying the capsules (100) from the store (2) to first seats (211) of the transferring wheel (210); second feeding conduits (4) spaced apart along the first direction (X) and spaced apart from the first feeding conduits (3) along a second direction (Y) substantially orthogonal to the first direction (X) for drawing the capsules (100) from the store (2) and conveying the capsules (100) from the store (2) to second seats (212) of the transferring wheel (210); first horizontal pushing means (11) and first vertical pushing means (12) for receiving and orienting the capsules (100) coming from the first feeding conduits (3); second horizontal pushing means (21) and second vertical pushing means (22) for receiving and orienting the capsules (100) coming from the second feeding conduits (4).

No. of Pages : 23 No. of Claims : 11

(12) PATENT APPLICATION PUBLICATION
(21) Application No.2481/KOLNP/2014 A
(19) INDIA
(22) Date of filing of Application :03/11/2014
(43) Publication Date : 08/05/2015

(54) Title of the invention : ORGANIC SOLVENT BASED CONCENTRATED INK COMPOSITION FOR GRAVURE PRINTING AND GRAVURE PRINTING METHOD

(51) International classification :C09D11/10,B41M1/10,B41M1/30
(31) Priority Document No :2012-103731
(32) Priority Date :27/04/2012
(33) Name of priority country :Japan
(86) International Application No :PCT/JP2013/062402
Filing Date :26/04/2013
(87) International Publication No :WO 2013/162003
(61) Patent of Addition to Application Number :NA
Filing Date :NA
(62) Divisional to Application Number :NA
Filing Date :NA

(71)**Name of Applicant :**
1)SAKATA INX CORP.
Address of Applicant :23-37, Edobori 1-chome, Nishi-ku, Osaka-shi, Osaka 5500002 JAPAN
(72)**Name of Inventor :**
1)INOUE Takahiko
2)OGAWA Toru
3)HARADA Junichi

(57) Abstract :
Provided is an organic solvent-based concentrated ink composition for gravure printing, which has good print density, printability and lamination suitability even if used in gravure printing wherein a plate cylinder that is reduced in the thickness is used. An organic solvent-based concentrated ink composition for gravure printing, which is mainly composed of an organic pigment and/or an inorganic pigment, a polyurethane resin and an organic solvent, and which satisfies one of the conditions 1-3 described below. This organic solvent-based concentrated ink composition for gravure printing has a viscosity of 10-1,000 mPa·s/25°C, a viscosity during printing of 12-23 seconds/25°C as measured using a #3 Zahn cup, and a viscosity of 100-500 mPa·s/25°C in cases where 30 parts by mass of a polyurethane resin is dissolved in 70 parts by mass of an organic solvent. Condition 1: 5-20% by mass of an organic pigment, 3-20% by mass of a polyurethane resin, and 60-200 parts by mass of the polyurethane resin per 100 parts by mass of the organic pigment Condition 2: 5-70% by mass of an inorganic pigment, 3-20% by mass of a polyurethane resin, and 5-60 parts by mass of the polyurethane resin per 100 parts by mass of the inorganic pigment Condition 3: 5-20% by mass of an organic pigment, 0 < inorganic pigment (mass)/organic pigment (mass) < 7.0, 3-20% by mass of a polyurethane resin, and 20-200 parts by mass of the polyurethane resin per 100 parts by mass of all the pigments

No. of Pages : 31 No. of Claims : 4

(12) PATENT APPLICATION PUBLICATION
(19) INDIA
(22) Date of filing of Application :03/11/2014
(21) Application No.2482/KOLNP/2014 A
(43) Publication Date : 08/05/2015

(54) Title of the invention : SHOT PEENING DEVICE

(51) International classification :B24C9/00,B24C3/24,B24C11/00
(31) Priority Document No :2012-179478
(32) Priority Date :13/08/2012
(33) Name of priority country :Japan
(86) International Application No :PCT/JP2013/070884
Filing Date :01/08/2013
(87) International Publication No :WO 2014/027575
(61) Patent of Addition to Application Number :NA
Filing Date :NA
(62) Divisional to Application Number :NA
Filing Date :NA

(71)**Name of Applicant :**
1)SINTOKOGIO, LTD.
Address of Applicant :11-11, Nishiki 1-chome, Naka-ku, Nagoya-shi, Aichi 4600003 Japan
(72)**Name of Inventor :**
1)YAMAMOTO, Masatoshi

(57) Abstract :
To efficiently draw up shot medium that has fallen into the hopper. [Solution] In the shot-blasting device (10), the intake pipe (54) is provided with a pipe cover (60) and the lower end of the intake pipe (54) is covered by the pipe cover (60). The intake opening (54A) of the intake pipe (54) is thereby disposed inside the pipe cover (60) and shot medium that has fallen towards the lower end of the intake pipe (54) inside the hopper (16) is dropped to the outside of the pipe cover (60). Because the accumulation of shot medium around the intake opening (54A) of the intake pipe (54) is thereby limited, blockage of the intake opening (54A) by shot medium can be limited. Therefore, reduction of intake efficiency of the intake pipe (54), which draws up the shot medium, is limited and shot medium that is dropped into the hopper (16) can be efficiently drawn up.

No. of Pages : 38 No. of Claims : 10

(12) PATENT APPLICATION PUBLICATION
(21) Application No.1255/KOL/2013 A
(19) INDIA
(22) Date of filing of Application :04/11/2013
(43) Publication Date : 08/05/2015

(54) Title of the invention : CHARGE BALANCED SELF ADJUSTING ELECTRICAL STIMULATOR FOR CORRECTING FOOT DROP PROBLEM

(51) International classification	:A61N 1/00
(31) Priority Document No	:NA
(32) Priority Date	:NA
(33) Name of priority country	:NA
(86) International Application No	:NA
Filing Date	:NA
(87) International Publication No	: NA
(61) Patent of Addition to Application Number	:NA
Filing Date	:NA
(62) Divisional to Application Number	:NA
Filing Date	:NA

(71)**Name of Applicant :**
1)INDIAN INSTITUTE OF TECHNOLOGY, KHARAGPUR
Address of Applicant :SPONSORED RESEARCH & INDUSTRIAL CONSULTANCY, INDIAN INSTITUTE OF TECHNOLOGY, KHARAGPUR-721302, WEST BENGAL, INDIA.
2)NATIONAL INSTITUTE FOR THE ORTHOPAEDICALLY HANDICAPPED,KOLKATA
(72)**Name of Inventor :**
1)SHENDKAR,CHANDRASHEKHAR V.
2)BISWAS,ABHISHEK
3)KUMAR,RATNESH
4)MAHADEVAPPA,MANJUNATHA
5)LENKA,PRASANNA K
6)SABUT,SUKANTA K

(57) Abstract :
A system for correcting foot drop problem of person having sensory-motor lesion in the central nervous system/ peripheral nervous system that impacted on movement using lower limbs by electrically stimulating movement of the muscles of the lower limb is proposed. The system comprises sensors for acquiring bio-physiological signal of the limb muscle/s, myo-controller module for determining or adjusting the electrical stimulation parameters based on the acquired bio-physiological and boost converter for generating charge balanced electrical stimulation in accordance with the determined stimulation parameters and delivered the same to the limb muscle.

No. of Pages : 21 No. of Claims : 17

(12) PATENT APPLICATION PUBLICATION
(19) INDIA
(22) Date of filing of Application :05/11/2014
(21) Application No.2505/KOLNP/2014 A
(43) Publication Date : 08/05/2015

(54) Title of the invention : PROCESS AND APPARATUS FOR OBTAINING MATERIAL OF VALUE FROM A BAUXITE RESIDUE

(51) International classification :C01F7/06
(31) Priority Document No :PCT/EP2012/056696
(32) Priority Date :12/04/2012
(33) Name of priority country :EPO
(86) International Application No :PCT/EP2013/057493
Filing Date :10/04/2013
(87) International Publication No :WO 2013/153115
(61) Patent of Addition to Application Number :NA
Filing Date :NA
(62) Divisional to Application Number :NA
Filing Date :NA

(71)**Name of Applicant :**
1)KRSYS GMBH
Address of Applicant :Schulstraße 8, 76532 Baden-Baden GERMANY
(72)**Name of Inventor :**
1)KRAUSE, Eberhard
2)SCHMIDT-BISCHOFFSHAUSEN, Horst

(57) Abstract :
The invention relates to a process for obtaining material of value from a bauxite residue which is obtainable or has been obtained by the Bayer process. This process comprises the steps of a) providing an aqueous suspension of the bauxite residue, b) setting a pH of the suspension to a value between 7.2 and 12.2, c) at least partly deagglomerating suspended mineral agglomerates of the bauxite residue, and d) separating the resulting mixture into an iron-rich fraction and into at least one further, preferably silicate-rich fraction. The invention further relates to an apparatus (10) for carrying out the process.

No. of Pages : 38 No. of Claims : 23

(12) PATENT APPLICATION PUBLICATION
(19) INDIA
(22) Date of filing of Application :05/11/2014

(21) Application No.2506/KOLNP/2014 A
(43) Publication Date : 08/05/2015

(54) Title of the invention : NON-EVAPORABLE GETTER ALLOYS PARTICULARLY SUITABLE FOR HYDROGEN AND NITROGEN SORPTION

(51) International classification :H01J7/18
(31) Priority Document No :MI2012A000872
(32) Priority Date :21/05/2012
(33) Name of priority country :Italy
(86) International Application No :PCT/IB2013/053874
Filing Date :13/05/2013
(87) International Publication No :WO 2013/175340
(61) Patent of Addition to Application Number :NA
Filing Date :NA
(62) Divisional to Application Number :NA
Filing Date :NA

(71)**Name of Applicant :**
1)SAES GETTERS S.P.A.
Address of Applicant :Viale Italia 77, I-20020 Lainate MI ITALY
(72)**Name of Inventor :**
1)CODA, Alberto
2)GALLITOGNOTTA, Alessandro
3)BONUCCI, Antonio
4)CONTE, Andrea

(57) Abstract :
Getter devices based on powders of alloys particularly suitable for hydrogen and nitrogen sorption are described, said alloys having a composition comprising zirconium, vanadium, titanium and, optionally, one or more elements selected from the group consisting of iron, chromium, manganese, cobalt, nickel and aluminum.

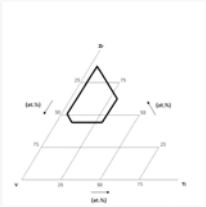

No. of Pages : 21 No. of Claims : 11

(12) PATENT APPLICATION PUBLICATION
(21) Application No.2507/KOLNP/2014 A
(19) INDIA
(22) Date of filing of Application :05/11/2014
(43) Publication Date : 08/05/2015

(54) Title of the invention : SAFETY ARRANGEMENT OF AN ELEVATOR

(51) International classification :B66B5/02
(31) Priority Document No :20125596
(32) Priority Date :31/05/2012
(33) Name of priority country :Finland
(86) International Application No :PCT/FI2013/050542
Filing Date :20/05/2013
(87) International Publication No :WO 2013/178873
(61) Patent of Addition to Application Number :NA
Filing Date :NA
(62) Divisional to Application Number :NA
Filing Date :NA

(71)**Name of Applicant :**
1)KONE CORPORATION
Address of Applicant :Kartanontie 1, FI-00330 Helsinki FINLAND
(72)**Name of Inventor :**
1)KATTAINEN, Ari
2)RAASSINA, Pasi
3)SAARIKOSKI, Tapio
4)STOLT, Lauri
5)NAKARI, Arto
6)KALLIONIEMI, Antti

(57) Abstract :
The invention relates to a safety arrangement of an elevator, which comprises sensors (27, 28) configured to indicate functions that are critical from the viewpoint of the safety of the elevator, and also a safety circuit (20, 34), with which the data formed by the aforementioned sensors (27, 28) indicating the safety of the elevator is read. The safety arrangement comprises a drive device (1) for driving the hoisting machine of the elevator. The drive device (1) comprises a DC bus (2 A, 2B), and also a motor bridge (3) connected to the DC bus for the electricity supply of the elevator motor (6). The motor bridge (3) comprises high- side (4A) and low-side (4B) switches for supplying electric power from the DC bus (2A, 2B) to the elevator motor (6) when driving with the elevator motor (6). and also from the elevator motor (6) to the DC bus (2A, 2B) when braking with the elevator motor (6). The drive device also comprises a control circuit (5) of the motor bridge, with which control circuit the operation of the motor bridge (3) is controlled by producing control pulses in the control poles of the high-side (4A) and low-side (4B) switches of the motor bridge, an input circuit (12) for a safety signal (13), which safety signal (13) can be disconnected/connected from outside the drive device (1), and also drive prevention logic (15), which is connected to the input circuit (12) and is configured to prevent the passage of control pulses to the control poles of the high- side (4 A) and/or low-side (4B) switches of the motor bridge when the safety signal (13) is disconnected. The signal conductor of the safety signal (13) is wired from the safety signal (20, 34) to the drive device (1), and the safety circuit (20, 34) comprises means (14) for disconnecting/connecting the safety signal (13). The safety circuit (20, 34) is arranged to bring the elevator into a state preventing a run by disconnecting the safety signal (13), and the safety circuit (20, 34) is arranged to remove the state preventing a run by connecting the safety signal (13).

No. of Pages : 41 No. of Claims : 21

(12) PATENT APPLICATION PUBLICATION
(19) INDIA
(22) Date of filing of Application :10/11/2014

(21) Application No.2524/KOLNP/2014 A
(43) Publication Date : 08/05/2015

(54) Title of the invention : ACTUATOR FOR A VALVE AND A VALVE COMPRISING SUCH ACTUACTOR

(51) International classification	:F16K27/07,F16K31/122,F16K41/10
(31) Priority Document No	:12171124.6
(32) Priority Date	:07/06/2012
(33) Name of priority country	:EPO
(86) International Application No	:PCT/EP2013/061485
Filing Date	:04/06/2013
(87) International Publication No	:WO 2013/182560
(61) Patent of Addition to Application Number	:NA
Filing Date	:NA
(62) Divisional to Application Number	:NA
Filing Date	:NA

(71)**Name of Applicant :**
1)ALFA LAVAL CORPORATE AB
Address of Applicant :P.O. Box 73, SE-22100 Lund, SWEDEN
(72)**Name of Inventor :**
1)NIELSEN, Jesper Bak
2)EBSEN, Johnny

(57) Abstract :
Actuator (1) for a valve (2), comprising a first piston (11), a first piston rod (13) and a first fluid chamber (12) for enabling movement of the first piston (11) and the first piston rod (13). The actuator (1) has a second piston (40), a second piston rod (45), the second piston rod (45) being coaxially arranged with the first piston rod (13) and radially enclosing at least a part of the first piston rod (13). A second fluid chamber (43) is arranged for the second piston (40), for enabling movement of the second piston (40) and the second piston rod (45). A first fluid channel (80) is arranged in communication with each of the first and the second fluid chambers (12, 43), for effecting, when fluid is introduced into the first fluid channel (80), movement of the first piston (11) and the second piston (40). Also, a valve comprising such actuator (1) is disclosed.

No. of Pages : 28 No. of Claims : 15

(12) PATENT APPLICATION PUBLICATION
(19) INDIA
(22) Date of filing of Application :10/11/2014
(21) Application No.2525/KOLNP/2014 A
(43) Publication Date : 08/05/2015

(54) Title of the invention : COMPOSITIONS AND METHODS FOR INHIBITING VIRAL POLYMERASE

(51) International classification :A61K31/4745,A61K31/7056,A61K31/706
(31) Priority Document No :61/625,994
(32) Priority Date :18/04/2012
(33) Name of priority country :U.S.A.
(86) International Application No :PCT/US2013/036945
Filing Date :17/04/2013
(87) International Publication No :WO 2013/158746
(61) Patent of Addition to Application Number :NA
Filing Date :NA
(62) Divisional to Application Number :NA
Filing Date :NA

(71)**Name of Applicant :**
1)BIOCRYST PHARMACEUTICALS, INC.
Address of Applicant :4505 Emperor Boulevard, Durham, NC 27703 UNITED STATES OF AMERICA.
(72)**Name of Inventor :**
1)KOTIAN, Pravin, L.
2)BABU, Yarlagadda, S.

(57) Abstract :
Provided are compounds of Formula (I) as described herein. Compounds of Formula (I) are useful in methods of inhibiting viral RNA polymerase activity and viral replication. Also provided are pharmaceutical compositions comprising compounds of Formula (I), as well as methods of treating viral infections using compounds of Formula (I).

No. of Pages : 138 No. of Claims : 53

(12) PATENT APPLICATION PUBLICATION
(19) INDIA
(22) Date of filing of Application :10/11/2014
(21) Application No.2526/KOLNP/2014 A
(43) Publication Date : 08/05/2015

(54) Title of the invention : TWO-COMPONENT ADHESION COMPOSITION SUITABLE FOR EXTRUSION COATING PAPER SUBSTRATES

(51) International classification :C09D123/10
(31) Priority Document No :08103741.8
(32) Priority Date :28/04/2008
(33) Name of priority country :EPO
(86) International Application No :PCT/EP2009/054892
Filing Date :23/04/2009
(87) International Publication No :WO2009/133016
(61) Patent of Addition to Application Number :NA
Filing Date :NA
(62) Divisional to Application Number :2706/KOLNP/2010
Filed on :23/07/2010

(71)**Name of Applicant :**
1)BOREALIS AG
Address of Applicant :WAGRAMER STRASSE 17-19, A-1220 VIENNA AUSTRIA.
(72)**Name of Inventor :**
1)LAIHO, ERKKI
2)NUMMILA-PAKARINEN, AULI
3)PACHNER, ELKE
4)RAJALA, HANNA
5)SAINIO, MARKKU
6)YLI-PELTOLA, JUHA

(57) Abstract :
The present invention discloses a two-component adhesion composition suitable for extrusion coating paper substrates comprising: a) from 70 to 98 wt% of high melt strength polypropylene (A) with a branching index g of 0.9 or less, and b) from 2 to 30 wt% of a component (B) selected from the group of (iii) polypropylene homopolymer with high melt flow rate.

No. of Pages : 41 No. of Claims : 8

(12) PATENT APPLICATION PUBLICATION
(19) INDIA
(22) Date of filing of Application :10/11/2014
(21) Application No.2527/KOLNP/2014 A
(43) Publication Date : 08/05/2015

(54) Title of the invention : MEDICAMENT DELIVERY DEVICE

(51) International classification :A61M5/24
(31) Priority Document No :1250384-3
(32) Priority Date :18/04/2012
(33) Name of priority country :Sweden
(86) International Application No :PCT/EP2013/057409
Filing Date :09/04/2013
(87) International Publication No :WO 2013/156350
(61) Patent of Addition to Application Number :NA
Filing Date :NA
(62) Divisional to Application Number :NA
Filing Date :NA

(71)**Name of Applicant :**
1)CAREBAY EUROPE LTD
Address of Applicant :Suite 3, Tower Business Centre, Tower Street, Swatar, BKR 4013 MALTA
(72)**Name of Inventor :**
1)LÖÖF, Stefan

(57) Abstract :
The present invention relates to a medicament container retaining mechanism (32) for a medicament delivery device (10) comprising at least one flexible retaining member (34) arranged to a housing part (12) of said medicament delivery device (10), which housing part (12) is configured to receive a generally tubular medicament container (22) therein; and wherein said at least one flexible retaining member (34) is configured to interact with an outer surface of said medicament container (22) received therein, whereby said at least one flexible retaining member (34) is configured to exert lateral clamping forces to said medicament container (22) to prevent movement in the generally lateral direction of said medicament container in said housing part (12).

No. of Pages : 15 No. of Claims : 4

(12) PATENT APPLICATION PUBLICATION
(19) INDIA
(22) Date of filing of Application :10/11/2014
(21) Application No.2528/KOLNP/2014 A
(43) Publication Date : 08/05/2015

(54) Title of the invention : MEDICAMENT DELIVERY DEVICE

(51) International classification :A61M5/50
(31) Priority Document No :1250381-9
(32) Priority Date :17/04/2012
(33) Name of priority country :Sweden
(86) International Application No :PCT/EP2013/057390
Filing Date :09/04/2013
(87) International Publication No :WO 2013/156346
(61) Patent of Addition to Application Number :NA
Filing Date :NA
(62) Divisional to Application Number :NA
Filing Date :NA

(71)**Name of Applicant :**
1)CAREBAY EUROPE LTD
Address of Applicant :Suite 3, Tower Business Centre, Tower Street, Swatar, BKR 4013 MATLA
(72)**Name of Inventor :**
1)HOLMQVIST, Anders
2)LÖÖF, Stefan

(57) Abstract :
The present invention relates to a medicament delivery device having a proximal and an opposing distal end. Said device comprises a medicament container comprising a movable plunger, a neck portion and a delivery member unit; a longitudinally extending housing along a longitudinal axis A and having a proximal open end and an opposing distal open end;a drive unit arranged at the distal end of the housing and configured to apply a force on the movable plunger; a C-shaped tubular body comprising a longitudinally extending slit/gap such that said C-shaped tubular body can be attached to the neck portion of said medicament container forming a container unit where in said C-shaped tubular body further comprises: inner support means configured to interact with the neck portion and with the delivery member unit of said medicament container such that said medicament container is prevented from being moved in relation to the C-shaped tubular body, after the medicament container is attached to said C-shaped tubular body, and outer support means configured to interact with corresponding support means of the housing such that said C-shaped tubular body is prevented from being moved in relation to the housing after the container unit is arranged within said housing through the distal open end.

No. of Pages : 30 No. of Claims : 12

(12) PATENT APPLICATION PUBLICATION
(19) INDIA
(22) Date of filing of Application :06/11/2013
(21) Application No.1264/KOL/2013 A
(43) Publication Date : 08/05/2015

(54) Title of the invention : A DROPLET-BASED NUCLEIC ACID SIGNAL AMPLIFICATION ASSAY TECHNIQUE

(51) International classification	:G01N 33/00
(31) Priority Document No	:NA
(32) Priority Date	:NA
(33) Name of priority country	:NA
(86) International Application No	:NA
Filing Date	:NA
(87) International Publication No	: NA
(61) Patent of Addition to Application Number	:NA
Filing Date	:NA
(62) Divisional to Application Number	:NA
Filing Date	:NA

(71)**Name of Applicant :**
1)SIEMENS AKTIENGESELLSCHAFT
Address of Applicant :Wittelsbacherplatz 2, 80333 München, Germany
(72)**Name of Inventor :**
1)RAGAVENDAR ,MS
2)RAMYA VUTUKURU

(57) Abstract :
A droplet-based nucleic acid signal amplification assay technique is presented. In the assay, reagents including a capture probe bound to a solid phase, a capture extender probe, a label extender probe, a preamplifier probe, multiple amplifier probes, and multiple labeled oligonucleotides are added to a sample suspected of containing a target nucleic acid to be determined. The droplets are generated and incubated such that the hybridization reaction amongst the reagents and the target nucleic acid occurs inside the droplets which are subsequently ruptured and bound oligonucleotides are determined. Alternatively, a first set of reagents including a capture probe bound to a solid phase, a capture extender probe, a label extender probe are added to the sample, droplets are generated, incubated and ruptured. Subsequently, a second set of reagents including a preamplifier probe, multiple amplifier probes, and multiple labeled oligonucleotides are added and bound oligonucleotides are determined.

No. of Pages : 33 No. of Claims : 12

(12) PATENT APPLICATION PUBLICATION
(19) INDIA
(22) Date of filing of Application :10/11/2014
(21) Application No.2529/KOLNP/2014 A
(43) Publication Date : 08/05/2015

(54) Title of the invention : TWO-COMPONENT ADHESION COMPOSITION SUITABLE FOR EXTRUSION COATING PAPER SUBSTRATES

(51) International classification :C09D123/10
(31) Priority Document No :08103741.8
(32) Priority Date :28/04/2008
(33) Name of priority country :EPO
(86) International Application No :PCT/EP09/054892
Filing Date :23/04/2009
(87) International Publication No :WO2009/133016
(61) Patent of Addition to Application Number :NA
Filing Date :NA
(62) Divisional to Application Number :2706/KOLNP/2010
Filed on :23/07/2010

(71)**Name of Applicant :**
1)BOREALIS AG
Address of Applicant :WAGRAMER STRASSE 17-19, A-1220 VIENNA AUSTRIA
(72)**Name of Inventor :**
1)LAIHO, ERKKI
2)NUMMILA-PAKARINEN, AULI
3)PACHNER, ELKE
4)RAJALA, HANNA
5)SAINIO, MARKKU
6)YLI-PELTOLA, JUHA

(57) Abstract :
The present invention discloses two-component adhesion composition suitable for extrusion coating paper substrates comprising: a) from 70 to 98 wt% of high melt strength polypropylene (A) with a branching index g of 0.9 or less, and b) from 2 to 30 wt% of a component (B) selected from the group of (iv) ethylene-vinyl acetate-based hot melt adhesive.

No. of Pages : 41 No. of Claims : 7

(12) PATENT APPLICATION PUBLICATION
(19) INDIA
(22) Date of filing of Application :10/11/2014
(21) Application No.2530/KOLNP/2014 A
(43) Publication Date : 08/05/2015

(54) Title of the invention : T CELL RECEPTOR-DEFICIENT T CELL COMPOSITIONS

(51) International classification	:C12N5/0783,C12N5/10,A61K35/12
(31) Priority Document No	:13/459,664
(32) Priority Date	:30/04/2012
(33) Name of priority country	:U.S.A.
(86) International Application No	:PCT/US2013/038921
Filing Date	:30/04/2013
(87) International Publication No	:WO 2013/166051
(61) Patent of Addition to Application Number	:NA
Filing Date	:NA
(62) Divisional to Application Number	:NA
Filing Date	:NA

(71)**Name of Applicant :**
1)THE TRUSTEES OF DARTMOUTH COLLEGE
Address of Applicant :11 Rope Ferry Road, #6210, Hanover, NH 03755-1404 UNITED STATES OF AMERICA
(72)**Name of Inventor :**
1)SENTMAN, Charles, L.

(57) Abstract :
The invention is directed to modified T cells, methods of making and using isolated, modified T cells, and methods of using these isolated, modified T cells to address diseases and disorders. In one embodiment, this invention broadly relates to TCR-deficient T cells, isolated populations thereof, and compositions comprising the same. In another embodiment of the invention, these TCR-deficient T cells are designed to express a functional non-TCR receptor. The invention also pertains to methods of making said TCR-deficient T cells, and methods of reducing or ameliorating, or preventing or treating, diseases and disorders using said TCR-deficient T cells, populations thereof, or compositions comprising the same.

No. of Pages : 58 No. of Claims : 33

(12) PATENT APPLICATION PUBLICATION
(19) INDIA
(22) Date of filing of Application :10/11/2014
(21) Application No.2531/KOLNP/2014 A
(43) Publication Date : 08/05/2015

(54) Title of the invention : MOBILE ASSET DATA RECORDER AND TRANSMITTER

(51) International classification :G01C21/10,B61L25/02
(31) Priority Document No :61/624,142
(32) Priority Date :13/04/2012
(33) Name of priority country :U.S.A.
(86) International Application No :PCT/US2013/036408
Filing Date :12/04/2013
(87) International Publication No :WO 2013/155437
(61) Patent of Addition to Application Number :NA
Filing Date :NA
(62) Divisional to Application Number :NA
Filing Date :NA

(71)**Name of Applicant :**
1)WI-TRONIX, LLC
Address of Applicant :631 East Boughton Rd., #240 Bolingbrook, IL 60440 UNITED STATES OF AMERICA
(72)**Name of Inventor :**
1)JORDAN, Lawrence B., Jr.
2)MATTA, Lisa A.

(57) Abstract :
An acceleration-based mobile asset data recorder and transmitter equipped with a wireless processing unit, an event recorder, a digital video recorder, a fuel level sensor, and an inertial navigation sensor board. The inertial navigation sensor board includes a 3-axis gyroscope, a 3-axis accelerometer, a 3-axis magnetometer, and a microcontroller. The data recorder and transmitter allows for automatic orientation, automatic compass calibration, fuel compensation with pitch and roll, emergency brake application with impact detection, rough operating condition detection, engine running detection, and inertial navigation of a mobile asset. Users can use the normal operation of their mobile assets to locate and alert, in real-time, areas where their assets are encountering rough operating environments, to provide for quicker emergency response, and to validate the effectiveness of repairs and rerouting.

No. of Pages : 48 No. of Claims : 58

(12) PATENT APPLICATION PUBLICATION
(19) INDIA
(22) Date of filing of Application :11/11/2014
(21) Application No.2540/KOLNP/2014 A
(43) Publication Date : 08/05/2015

(54) Title of the invention : PLATE HEAT EXCHANGER

(51) International classification :F28F17/00
(31) Priority Document No :12171230.1
(32) Priority Date :08/06/2012
(33) Name of priority country :EPO
(86) International Application No :PCT/EP2013/059599
Filing Date :08/05/2013
(87) International Publication No :WO 2013/182370
(61) Patent of Addition to Application Number :NA
Filing Date :NA
(62) Divisional to Application Number :NA
Filing Date :NA

(71)**Name of Applicant :**
1)ALFA LAVAL CORPORATE AB
Address of Applicant :P. O. Box 73, SE-22100 Lund, SWEDEN
(72)**Name of Inventor :**
1)NOEL-BARON, Olivier

(57) Abstract :
A plate heat exchanger (2) comprising a first frame plate (4), a second frame plate (6), a first number of side walls (8, 10, 12, 14) and a stack (18) of heat transfer plates (20) is provided. The heat transfer plates each has a center portion (40) and a peripheral portion (42) encircling the center portion, and they are arranged in pairs between the first and second frame plates and essentially parallel thereto. A first flow path (F1) for a first fluid is formed between the heat transfer plates of the pairs and a second flow path (F2) for a second fluid is formed between the pairs of heat transfer plates. The side walls extend between the first and second frame plates and enclose the stack of heat transfer plates. A first side wall (10, 74) of the side walls, having an inside surface (62, 78) facing the stack of heat transfer plates, is provided with a through hole (60, 76) for draining of a substance from an inside to an outside of the plate heat exchanger, which substance originates from one of the first and second fluids. The plate heat exchanger is characterized in that at least a first portion (64a,78a) of the inside surface of the first side wall is sloping towards the hole for facilitating the draining of the substance.

No. of Pages : 23 No. of Claims : 11

(12) PATENT APPLICATION PUBLICATION
(21) Application No.2541/KOLNP/2014 A
(19) INDIA
(22) Date of filing of Application :11/11/2014
(43) Publication Date : 08/05/2015

(54) Title of the invention : RAILCAR BOGIE

(51) International classification :B61F5/30
(31) Priority Document No :2012-087064
(32) Priority Date :06/04/2012
(33) Name of priority country :Japan
(86) International Application No :PCT/JP2013/001596
Filing Date :12/03/2013
(87) International Publication No :WO2013/150720
(61) Patent of Addition to Application Number :NA
Filing Date :NA
(62) Divisional to Application Number :2107/KOLNP/2014
Filed on :07/10/2014

(71)**Name of Applicant :**
1)KAWASAKI JUKOGYO KABUSHIKI KAISHA
Address of Applicant :1-1, Higashikawasaki-cho 3-chome, Chuo-ku, Kobe-shi, Hyogo 6508670 Japan
(72)**Name of Inventor :**
1)NISHIMURA,TAKEHIRO
2)NAKAO, SHUNICHI

(57) Abstract :
A railcar bogie comprising: a cross beam configured to support a carbody of a railcar; a pair of front and rear axles between which the cross beam is located and which are respectively arranged in front of and behind the cross beam in a railcar longitudinal direction so as to extend in a railcar width direction; bearings respectively provided at both railcar width direction sides of the axles and configured to rotatably support the axles; axle box main bodies configured to respectively accommodate the bearings; plate springs extending in the railcar longitudinal direction to respectively support both railcar width direction end portions of the cross beam, vicinities of both longitudinal direction ends of the plate springs being respectively supported by the axle box main bodies, each of the plate springs being provided with first overhang portions each projecting toward a longitudinal direction outer side from an end portion of a supporting surface of the axle box main body; and second overhang portions respectively formed integrally with the axle box main bodies or respectively supported by the axle box main bodies, and respectively opposed to lower surfaces of the first overhang portions so as to be separable from the lower surfaces, wherein a bolt hole is formed at a position of one of the first overhang portion and the second overhang portion, the position being opposed to the other of the first overhang portion and the second overhang portion.

No. of Pages : 25 No. of Claims : 4

(12) PATENT APPLICATION PUBLICATION
(19) INDIA
(22) Date of filing of Application :11/11/2014
(21) Application No.2542/KOLNP/2014 A
(43) Publication Date : 08/05/2015

(54) Title of the invention : FERRITIC STAINLESS STEEL

(51) International classification :C22C38/00,C22C38/52,C22C38/54
(31) Priority Document No :2012-120531
(32) Priority Date :28/05/2012
(33) Name of priority country :Japan
(86) International Application No :PCT/JP2013/003282
Filing Date :23/05/2013
(87) International Publication No :WO 2013/179616
(61) Patent of Addition to Application Number :NA
Filing Date :NA
(62) Divisional to Application Number :NA
Filing Date :NA

(71)**Name of Applicant :**
1)JFE STEEL CORPORATION
Address of Applicant :2-3, Uchisaiwai-cho 2-chome, Chiyoda-ku, Tokyo 1000011 JAPAN
(72)**Name of Inventor :**
1)NAKAMURA, Tetsuyuki
2)OTA, Hiroki
3)OGATA, Hiroyuki

(57) Abstract :
Provided is a ferritic stainless steel which has excellent scale adhesion and excellent thermal fatigue characteristics. A ferritic stainless steel which is characterized by containing, in mass%, 0.020% or less of C, 1.0% or less of Si, 1.0% or less of Mn, 0.040% or less of P, 0.030% or less of S, from 16.0% to 20.0% (inclusive) of Cr, 0.020% or less of N, from 0.30% to 0.80% (inclusive) of Nb, from 4 × (C% + N%)% to 0.50% (inclusive) of Ti, less than 0.20% of Al, from 0.05% to 0.40% (inclusive) of Ni, and from 0.01% to 0.30% (inclusive) of Co, with the balance made up of Fe and unavoidable impurities. In this connection, the above-mentioned C% and N% respectively represent the contents of C and N (mass%).

No. of Pages : 31 No. of Claims : 3

(12) PATENT APPLICATION PUBLICATION
(21) Application No.2545/KOLNP/2014 A
(19) INDIA
(22) Date of filing of Application :11/11/2014
(43) Publication Date : 08/05/2015

(54) Title of the invention : DEVICE FOR INTERACTIVE CONTROL

(51) International classification :H05B37/02
(31) Priority Document No :VR2012A000090
(32) Priority Date :15/05/2012
(33) Name of priority country :Italy
(86) International Application No :PCT/IB2013/053977
Filing Date :15/05/2013
(87) International Publication No :WO 2013/171695
(61) Patent of Addition to Application Number :NA
Filing Date :NA
(62) Divisional to Application Number :NA
Filing Date :NA

(71)**Name of Applicant :**
1)INTEREL TRADEMARKS B.V.
Address of Applicant :Silodam 187, NL-1013 AS Amsterdam NETHERLANDS
(72)**Name of Inventor :**
1)BENONI, Andrea

(57) Abstract :
Described is an interactive control device (1) for at least one service apparatus (2), comprising a control unit (3), a screen (4) operatively connected to the control unit (3) having touch selection means (5) for interacting with the user. The touch selection means (5) are configurable between an active condition wherein they receive the touch information of the user and an inactive condition wherein they do not receive the touch information of the user. More specifically, the interactive control device (1) comprises a presence and distance sensor (7) operatively connected to the control unit (3) and configured for generating a detection signal (8) representing the presence and the distance of a user relative to the sensor (7). The control unit (3) is configured for receiving the detection signal (8), for processing it and for generating a control signal of at least part of the service apparatus (2) as a function of the processing.

No. of Pages : 37 No. of Claims : 12

(12) PATENT APPLICATION PUBLICATION
(19) INDIA
(22) Date of filing of Application :11/11/2014
(21) Application No.2546/KOLNP/2014 A
(43) Publication Date : 08/05/2015

(54) Title of the invention : RAILROAD CAR PLATFORM CAR COMPRISING AXLE SPRING

(51) International classification :B61F5/30,F16F1/40,F16F9/05
(31) Priority Document No :2012-134405
(32) Priority Date :14/06/2012
(33) Name of priority country :Japan
(86) International Application No :PCT/JP2013/003495
Filing Date :04/06/2013
(87) International Publication No :WO 2013/187006
(61) Patent of Addition to Application Number :NA
Filing Date :NA
(62) Divisional to Application Number :NA
Filing Date :NA

(71)**Name of Applicant :**
1)KAWASAKI JUKOGYO KABUSHIKI KAISHA
Address of Applicant :1-1, Higashikawasaki-cho 3-chome, Chuo-ku, Kobe-shi, Hyogo 6508670 JAPAN
(72)**Name of Inventor :**
1)SATO, Yoshi
2)OGURA, Yoshikazu
3)NAKAO, Shunichi

(57) Abstract :
Provided is a railroad car platform car comprising an axle spring configuration with which, while lowering the height of a platform car frame, it is possible to alleviate sagging of rubber. A railroad car platform car (1) comprises: a platform car frame (3); an axle box (5) which is positioned below the platform car frame (3); an air spring (8) which is interposed between the upper face of the axle box (5) and the platform car frame (3), and which supports the platform car frame (3); and a pair of rubber springs (7a, 7b) which are interposed between both side faces (51a, 51b) of the axle box (5) in the longitudinal direction of the platform car frame (3) and the platform car frame (3), and which support the platform car frame (3).

No. of Pages : 28 No. of Claims : 7

(12) PATENT APPLICATION PUBLICATION
(19) INDIA
(22) Date of filing of Application :11/11/2014
(21) Application No.2547/KOLNP/2014 A
(43) Publication Date : 08/05/2015

(54) Title of the invention : A METHOD OF PRODUCING AN APERTURE PLATE FOR A NEBULIZER

(51) International classification :C25D1/08,C25D3/50,B05B17/00
(31) Priority Document No :61/658,054
(32) Priority Date :11/06/2012
(33) Name of priority country :U.S.A.
(86) International Application No :PCT/EP2013/060803
Filing Date :24/05/2013
(87) International Publication No :WO 2013/186031
(61) Patent of Addition to Application Number :NA
Filing Date :NA
(62) Divisional to Application Number :NA
Filing Date :NA

(71)**Name of Applicant :**
1)STAMFORD DEVICES LIMITED
Address of Applicant :Galway Business Park, Dangan, Galway IRELAND
(72)**Name of Inventor :**
1)HOGAN, Brendan

(57) Abstract :
A photo-resist (21) is applied in a pattern of vertical columns having the dimensions of holes or pores of the aperture plate to be produced. This mask pattern provides the apertures which define the aerosol particle size, having up to 2500 holes per square mm. There is electro-deposition of metal (22) into the spaces around the columns (21). There is further application of a second photo-resist mask (25) of much larger (wider and taller) columns, encompassing the area of a number of first columns (21). The hole diameter in the second plating layer is chosen according to a desired flow rate.

No. of Pages : 23 No. of Claims : 32

(12) PATENT APPLICATION PUBLICATION
(19) INDIA
(22) Date of filing of Application :11/11/2014
(21) Application No.2548/KOLNP/2014 A
(43) Publication Date : 08/05/2015

(54) Title of the invention : METHOD AND FORMULATIONS FOR THE MANUFACTURE OF COATED ARTICLES AND COMPOSITES

(51) International classification :C08F283/10,G03F7/004,G03F7/021
(31) Priority Document No :1200269-7
(32) Priority Date :07/05/2012
(33) Name of priority country :Sweden
(86) International Application No :PCT/EP2013/059462
Filing Date :07/05/2013
(87) International Publication No :WO 2013/167576
(61) Patent of Addition to Application Number :NA
Filing Date :NA
(62) Divisional to Application Number :NA
Filing Date :NA

(71)**Name of Applicant :**
1)MERCENE LABS AB
Address of Applicant :Öregrundsgatan 18, S-115 59 Stockholm SWEDEN
(72)**Name of Inventor :**
1)CARLBORG, Carl Fredrik
2)HARALDSSON, Tommy

(57) Abstract :
An object with a coating comprising: a) covalent bonds formed by reaction of a thiol group and a carbon-carbon double bond, b) covalent bonds formed by reaction of a thiol group and epoxide group, c) covalent bonds formed by a reaction of a carbon-carbon double bond and an epoxide group, said coating comprising a first primer coating and a second coating, said coating comprising covalent bonds between said first and second coatings, said first primer coating comprising covalent cross links between compounds, in the first coating the fraction (r3 = ta/tc) of unreacted thiol groups (ta) to thiol groups which have reacted to form a covalent bond (tc) does not exceed 0.11, wherein the half height peak width of tan delta does not exceed 30°C. Advantages of the dual cure composition is that excellent strength is obtained and that the second curing is slow compared to the first initial curing.

No. of Pages : 45 No. of Claims : 28

(12) PATENT APPLICATION PUBLICATION
(19) INDIA
(22) Date of filing of Application :03/11/2014
(21) Application No.2463/KOLNP/2014 A
(43) Publication Date : 08/05/2015

(54) Title of the invention : CATECHOL O-METHYLTRANSFERASE ACTIVITY INHIBITING COMPOUNDS

(51) International classification :C07C255/53,A61K31/277,A61P25/00
(31) Priority Document No :61/651,217
(32) Priority Date :24/05/2012
(33) Name of priority country :U.S.A.
(86) International Application No :PCT/FI2013/000026
Filing Date :23/05/2013
(87) International Publication No :WO 2013/175053
(61) Patent of Addition to Application Number :NA
Filing Date :NA
(62) Divisional to Application Number :NA
Filing Date :NA

(71)**Name of Applicant :**
1)ORION CORPORATION
Address of Applicant :Orionintie 1, FI-02200 Espoo FINLAND
(72)**Name of Inventor :**
1)AHLMARK, Marko
2)DIN BELLE, David
3)KAUPPALA, Mika
4)LUIRO, Anne
5)PAJUNEN, Taina
6)PYSTYNEN, Jarmo
7)TIAINEN, Eija
8)VAISMAA, Matti
9)MESSINGER, Josef

(57) Abstract :
Compounds of formula (I), wherein R1 is as defined in the claims, exhibit COMT enzyme inhibiting activity and are thus useful as COMT inhibitors.

No. of Pages : 146 No. of Claims : 27

(12) PATENT APPLICATION PUBLICATION
(21) Application No.2464/KOLNP/2014 A
(19) INDIA
(22) Date of filing of Application :03/11/2014
(43) Publication Date : 08/05/2015

(54) Title of the invention : HEAT TRANSFER PIPE FOR FIN-AND-TUBE TYPE HEAT EXCHANGER, AND FIN-AND-TUBE TYPE HEAT EXCHANGER

(51) International classification :F28F1/40,F25B39/00,F28F1/02
(31) Priority Document No :2012-133856
(32) Priority Date :13/06/2012
(33) Name of priority country :Japan
(86) International Application No :PCT/JP2013/062918
Filing Date :08/05/2013
(87) International Publication No :WO 2013/187156
(61) Patent of Addition to Application Number :NA
Filing Date :NA
(62) Divisional to Application Number :NA
Filing Date :NA

(71)**Name of Applicant :**
1)UACJ CORPORATION
Address of Applicant :1-7-2, Otemachi, Chiyoda-ku, Tokyo 1000004 JAPAN Japan
(72)**Name of Inventor :**
1)KAKIYAMA, Shiro
2)SASAZAKI, Mikine

(57) Abstract :
Provided are a heat transfer pipe for a fin-and-tube type heat exchanger and a fin-and-tube type heat exchanger using this heat transfer pipe, with which the refrigerant-side heat transfer efficiency can be improved effectively. Trapezoidal holes (20), which are formed in flat multi-hole tubes (14) comprising aluminum or an alloy thereof, are formed such that the length of the upper base is ½ or less than the length of the lower base, the height of the hole is 0.5-0.8 times the thickness of the heat transfer pipe, and the ratio (D/h) of the hydraulic diameter D and the hole height h is in a range of 0.40-0.85, with the hydraulic diameter defined by dividing four times the cross-sectional area of the hole by the sum of the lengths of the sides of the hole. Flat multi-hole tubes (14) of this type are assembled together with fins (12) comprising aluminum or an alloy thereof to form a fin-and-tube type heat exchanger (10).

No. of Pages : 23 No. of Claims : 7

(12) PATENT APPLICATION PUBLICATION
(19) INDIA
(22) Date of filing of Application :03/11/2014
(21) Application No.2465/KOLNP/2014 A
(43) Publication Date : 08/05/2015

(54) Title of the invention : IMAGING DEVICE, IMAGING SYSTEM, AND IMAGING METHOD

(51) International classification	:H04N5/225,G03B15/00,G03B17/02
(31) Priority Document No	:2012-115532
(32) Priority Date	:21/05/2012
(33) Name of priority country	:Japan
(86) International Application No	:PCT/JP2013/064422
Filing Date	:17/05/2013
(87) International Publication No	:WO 2013/176237
(61) Patent of Addition to Application Number	:NA
Filing Date	:NA
(62) Divisional to Application Number	:NA
Filing Date	:NA

(71)**Name of Applicant :**
1)RICOH COMPANY, LTD.
Address of Applicant :3-6, Nakamagome 1-chome, Ohta-ku, Tokyo, 1438555 JAPAN
(72)**Name of Inventor :**
1)OMURA, Keiji
2)YAMAMOTO, Kengo
3)MANO, Hiroko
4)HORIKAWA, Hirofumi
5)OHTA, Yusuke
6)OHTSUKA, Aiko

(57) Abstract :
An imaging device includes an imaging unit configured take a plurality of images, the imaging unit including a plurality of imaging parts each configured to acquire an imaging data item relevant to one of the plurality of images taken, and a wiring part configured to transmit a plurality of the imaging data items acquired by the plurality of imaging parts. The wiring part includes an external part forming an outline of the wiring part, and a cable part disposed inside the external part. The plurality of imaging parts are disposed along a longitudinal direction of the wiring part, and the imaging unit is configured to acquire the plurality of the imaging data items corresponding to a plurality of imaging positions, and transmit the plurality of the imaging data items by using the cable part.

No. of Pages : 65 No. of Claims : 12

(12) PATENT APPLICATION PUBLICATION
(19) INDIA
(22) Date of filing of Application :12/11/2014
(21) Application No.2567/KOLNP/2014 A
(43) Publication Date : 08/05/2015

(54) Title of the invention : METHODS, SYSTEMS, AND DEVICES FOR DETECTING AND IDENTIFYING MICROORGANISMS IN MICROBIOLOGICAL CULTURE SAMPLES

(51) International classification :G01N33/569,C12M1/34,C12M1/28
(31) Priority Document No :61/623,522
(32) Priority Date :12/04/2012
(33) Name of priority country :U.S.A.
(86) International Application No :PCT/US2013/032499
Filing Date :15/03/2013
(87) International Publication No :WO 2013/165615
(61) Patent of Addition to Application Number :NA
Filing Date :NA
(62) Divisional to Application Number :NA
Filing Date :NA

(71)**Name of Applicant :**
1)BECTON DICKINSON AND COMPANY
Address of Applicant :1 Becton Drive, MC 110, Franklin Lakes, New Jersey 07417-1880 UNITED STATES OF AMERICA
(72)**Name of Inventor :**
1)WEIDEMAIER, Kristin
2)CAMPBELL, Robert L.
3)CARRUTHERS, Erin Gooch
4)CURRY, Adam C.
5)DOLAN, Kevin G.
6)LIEBMANN-VINSON, Andrea
7)WOODLEY, Wendy Dale
8)KURODA, Melody M.H.
9)LENTZ, Ammon David
10)LIVINGSTON, Dwight
11)LIZZI, Michael Justin
12)LOCKHART, Artis R.
13)RITCHEY, Ernie
14)FALLOWS, Eric A.
15)GORELICK, Donald E.
16)KESSLER, Jack
17)LOVETTE, Spencer
18)OJALA, Jeffrey S.
19)TALMER, Mark A.
20)BARTKOWIAK, Miroslaw
21)DANHOF, Scott N.
22)KRAMER, Gregory S.
23)HAUBERT, Thomas D.
24)MARSHALL, Michael L.
25)PRESCOTT, James A.
26)SOMERVILLE, Randy J.
27)ULRICH, M. Scott
28)SEBBA, David S.

(57) Abstract :
Provided herein are methods, systems, and devices for detecting and/or identifying one or more specific microorganisms in a culture sample. Indicator particles, such as surface enhanced Raman spectroscopy (SERS)-active nanoparticles, each having associated therewith one or more specific binding members having an affinity for the one or more microorganisms of interest, can form a complex with specific microorganisms in the culture sample. Further, agitating magnetic capture particles also having associated therewith one or more specific binding members having an affinity for the one or more microorganisms of interest can be used to capture the microorganism-indicator particle complex and concentrate the complex in a localized area of an assay vessel for subsequent detection and identification. The complex can be dispersed, pelleted, and redispersed so that the culture sample can be retested a number of times during incubation so as to allow for real-time monitoring of the culture sample.

No. of Pages : 195 No. of Claims : 48

(12) PATENT APPLICATION PUBLICATION
(19) INDIA
(22) Date of filing of Application :12/11/2014
(21) Application No.2568/KOLNP/2014 A
(43) Publication Date : 08/05/2015

(54) Title of the invention : METHOD FOR PREPARATION OF A RUTHENIUM INDENYLIDENE COMPLEX

(51) International classification :C07F15/00,B01J23/46
(31) Priority Document No :12173596.3
(32) Priority Date :26/06/2012
(33) Name of priority country :EPO
(86) International Application No :PCT/EP2013/063208
Filing Date :25/06/2013
(87) International Publication No :WO 2014/001291
(61) Patent of Addition to Application Number :NA
Filing Date :NA
(62) Divisional to Application Number :NA
Filing Date :NA

(71)**Name of Applicant :**
1)UMICORE AG & CO. KG
Address of Applicant :Rodenbacher Chaussee 4, 63457 Hanau-Wolfgang GERMANY
(72)**Name of Inventor :**
1)DOPPIU, Angelino
2)HEIL, Beate
3)RIVAS-NASS, Andreas
4)WOERNER, Eileen
5)KARCH, Ralf

(57) Abstract :
The present invention is directed to a method for the preparation of ruthenium catalyst (PCy3)2CI2Ru(phenylindenylidene) (Umicore catalyst M1). The method comprises a one-step reaction reacting the precursor compound (PPh3)2CI2Ru(3-phenylindenylidene) with PCy3 in a cyclic ether solvent (preferably THF) in concentrations in the range of 0.2 to 0.6 mol catalyst/I while simultaneously precipitating the product from the reaction mixture. A cyclic ether solvate product with high crystal linity and high purity is obtained.

No. of Pages : 31 No. of Claims : 16

(12) PATENT APPLICATION PUBLICATION
(19) INDIA
(22) Date of filing of Application :03/11/2014
(21) Application No.2461/KOLNP/2014 A
(43) Publication Date : 08/05/2015

(54) Title of the invention : MAT

(51) International classification :B60N3/04
(31) Priority Document No :FI2012A000093
(32) Priority Date :15/05/2012
(33) Name of priority country :Italy
(86) International Application No :PCT/IB2013/000898
Filing Date :10/05/2013
(87) International Publication No :WO 2013/171559
(61) Patent of Addition to Application Number :NA
Filing Date :NA
(62) Divisional to Application Number :NA
Filing Date :NA

(71)**Name of Applicant :**
1)MASI, Antonio
Address of Applicant :VialedeiPini 2, I-50142 Firenze Italy
(72)**Name of Inventor :**
1)MASI, Antonio

(57) Abstract :
Described is a mat (1) comprising a supporting layer (2); a plurality of filaments (3) anchored to the layer (2); at least one compacted zone (5) made on the layer (2) wherein the filaments (3) are compacted on the layer (2) and bonded to each other.

No. of Pages : 14 No. of Claims : 11

(12) PATENT APPLICATION PUBLICATION
(19) INDIA
(22) Date of filing of Application :03/11/2014
(21) Application No.2462/KOLNP/2014 A
(43) Publication Date : 08/05/2015

(54) Title of the invention : INJECTABLE PREPARATION

(51) International classification :A61K9/06,A61K47/10,A61K47/32
(31) Priority Document No :61/636,938
(32) Priority Date :23/04/2012
(33) Name of priority country :U.S.A.
(86) International Application No :PCT/JP2013/062683
Filing Date :23/04/2013
(87) International Publication No :WO 2013/162048
(61) Patent of Addition to Application Number :NA
Filing Date :NA
(62) Divisional to Application Number :NA
Filing Date :NA

(71)**Name of Applicant :**
1)OTSUKA PHARMACEUTICAL CO., LTD.
Address of Applicant :9, Kanda-Tsukasamachi 2-chome, Chiyoda-ku, Tokyo, 1018535 Japan
(72)**Name of Inventor :**
1)KANEKO, Daiki
2)MATSUDA, Takakuni
3)HOSHIKA, Yusuke

(57) Abstract :
An object of the present invention is to provide a storage-stable injectable preparation comprising a composition comprising a poorly soluble drug as an active ingredient and a dispersion medium. Another object of the present invention is to provide a compact, lightweight prefilled syringe by filling a syringe with the injectable preparation. The present invention provides an injectable preparation comprising a composition comprising a poorly soluble drug, a dispersion medium, and a specific suspending agent, the composition having a viscosity of 40 pascal-seconds or more in at least one point in the shear rate range of 0.01 to 0.02 s-1 and having a viscosity of 0.2 pascal-seconds or less in at least one point in the shear rate range of 900 to 1,000 s-1, as measured.

No. of Pages : 117 No. of Claims : 37

(12) PATENT APPLICATION PUBLICATION
(19) INDIA
(22) Date of filing of Application :12/11/2014
(21) Application No.2564/KOLNP/2014 A
(43) Publication Date : 08/05/2015

(54) Title of the invention : ELECTROCHROMIC WINDOW FABRICATION METHODS

(51) International classification :G02F1/15,E06B9/24
(31) Priority Document No :13/456,056
(32) Priority Date :25/04/2012
(33) Name of priority country :U.S.A.
(86) International Application No :PCT/US2013/037644
Filing Date :22/04/2013
(87) International Publication No :WO 2013/163107
(61) Patent of Addition to Application Number :NA
Filing Date :NA
(62) Divisional to Application Number :NA
Filing Date :NA

(71)**Name of Applicant :**
1)VIEW, INC.
Address of Applicant :195 South Milpitas Boulevard, Milpitas, California 95035 U.S.A.
(72)**Name of Inventor :**
1)PARKER, Ronald M.
2)ROZBICKI, Robert T.
3)BHATNAGAR, Yashraj
4)DIXIT, AbhishekAnant
5)PRADHAN, Anshu A

(57) Abstract :
Methods of manufacturing electrochromic windows are described. Insulated glass units (IGUs) are protected, e.g. during handling and shipping, by a protective bumper. The bumper can be custom made using IGU dimension data received from the IGU fabrication tool. The bumper may be made of environmentally friendly materials. Laser isolation configurations and related methods of patterning and/or configuring an electrochromic device on a substrate are described. Edge deletion is used to ensure a good seal between spacer and glass in an IGU and thus better protection of an electrochromic device sealed in the IGU. Configurations for protecting the electrochromic device edge in the primary seal and maximizing viewable area in an electrochromic pane of an IGU are also described.

No. of Pages : 74 No. of Claims : 66

(12) PATENT APPLICATION PUBLICATION
(19) INDIA
(22) Date of filing of Application :12/11/2014
(21) Application No.2565/KOLNP/2014 A
(43) Publication Date : 08/05/2015

(54) Title of the invention : SYSTEM AND METHOD FOR PROVIDING CORROSION PROTECTION OF METALLIC STRUCTURE USING TIME VARYING ELECTROMAGNETIC WAVE

(51) International classification :C23C8/00,C23C22/00,C23F13/02
(31) Priority Document No :NA
(32) Priority Date :NA
(33) Name of priority country :NA
(86) International Application No :PCT/SG2012/000380
Filing Date :11/10/2012
(87) International Publication No :WO 2014/058388
(61) Patent of Addition to Application Number :NA
Filing Date :NA
(62) Divisional to Application Number :NA
Filing Date :NA

(71)**Name of Applicant :**
1)ECOSPEC GLOBAL TECHNOLOGY PTE LTD
Address of Applicant :60 Admiralty Road West, Singapore 759956 Singapore
(72)**Name of Inventor :**
1)CHEW, Hwee Hong

(57) Abstract :
The present invention provides a system for providing corrosion protection of a metallic structure using time varying electromagnetic wave, comprising: a generator for generating electromagnetic wave having a time varying frequency, said generator having at least two output terminals in electrical connection respectively with first and second excitation sites which are positioned in a spaced manner on the metallic structure, allowing for subjecting the metallic structure to the electromagnetic wave; and an electric power source connected to the generator for applying a driving voltage to the generator to drive the generation of the electromagnetic wave; wherein the driving voltage and/or the frequency of the electromagnetic wave are selected such that the metallic structure is energized to form in-situ a passive oxidized species of the metal on a surface of the metallic structure, which species is insusceptible to corrosion. The invention also provides a method for providing corrosion protection of a metallic structure using time varying electromagnetic wave.

No. of Pages : 28 No. of Claims : 27

(12) PATENT APPLICATION PUBLICATION
(19) INDIA
(22) Date of filing of Application :12/11/2014
(21) Application No.2566/KOLNP/2014 A
(43) Publication Date : 08/05/2015

(54) Title of the invention : LINING MOUNTED INFLATABLE PROTECTOR AND PROTECTIVE CLOTHING ASSEMBLY

(51) International classification :A41D13/018
(31) Priority Document No :TV2012A000124
(32) Priority Date :26/06/2012
(33) Name of priority country :Italy
(86) International Application No :PCT/EP2013/062865
Filing Date :20/06/2013
(87) International Publication No :WO 2014/001189
(61) Patent of Addition to Application Number :NA
Filing Date :NA
(62) Divisional to Application Number :NA
Filing Date :NA

(71)**Name of Applicant :**
1)ALPINESTARS RESEARCH SRL
Address of Applicant :Via A. De Gasperi, 54, I-31010 Coste di Maser (Treviso) Italy
(72)**Name of Inventor :**
1)MAZZAROLO, Giovanni
2)BALLANTYNE, Colin

(57) Abstract :
The present invention relates to an inflatable lining (20) comprising a control unit (26), at least one inflatable bag (22) and at least one gas source (24). According to the invention, the inflatable lining (20) further comprises automatic enabling means (28) suitable for switching the control unit (26) from a first operative mode to a second operative mode and viceversa. In the first operative mode the control unit (26) is set so as to ignore any identified danger situation, while in the second operative mode the control unit (26) is set for activating the gas source (24) when a danger situation is identified. The automatic enabling means (28) comprise receiving means suitable for acquiring data from at least one external data source and for maintaining the control unit (26) in the first operative mode in case no data can be acquired from the external source or the acquired data identifies an external source incompatible with the lining mounted inflatable protector (20). The present invention also relates to a protective clothing assembly (1) comprising at least one garment (10), provided with identification means (12), and said inflatable lining (20).

No. of Pages : 29 No. of Claims : 13

(12) PATENT APPLICATION PUBLICATION
(19) INDIA
(22) Date of filing of Application :03/11/2014
(21) Application No.2468/KOLNP/2014 A
(43) Publication Date : 08/05/2015

(54) Title of the invention : DEVICE FOR PRODUCING POLYMER PELLETS, EXTRUDED PROFILES OR MOULDINGS AND MELT PUMP THEREFOR

(51) International classification :B29C47/36,B29B7/48,B29C47/08
(31) Priority Document No :10 2012 012 444.9
(32) Priority Date :25/06/2012
(33) Name of priority country :Germany
(86) International Application No :PCT/DE2013/000327
Filing Date :24/06/2013
(87) International Publication No :WO 2014/000725
(61) Patent of Addition to Application Number :NA
Filing Date :NA
(62) Divisional to Application Number :NA
Filing Date :NA

(71)**Name of Applicant :**
1)HENKE PROPERTY UG (HAFTUNGSBESCHRÄNKT)
Address of Applicant :KleinerHolzweg 25, 34121 Kassel Germany
(72)**Name of Inventor :**
1)HENKE, Matthias

(57) Abstract :
The invention concerns a device for producing polymer pellets, extruded profiles or mouldings, comprising an extruder for producing a polymer melt, comprising a melt pump (2) for building up pressure for the purpose of forcing the polymer melt through a die and comprising the die for creating the pellet, the extruded profile or the moulding, wherein the melt pump (2) is formed separately from the extruder and has a drive (5) of its own. Providing such a device for producing polymer pellets, extruded profiles or mouldings in which the extruder does not need a pressure increasing unit is achieved by the transfer of the polymer melt from the extruder to the melt pump (2) taking place in a pressureless or almost pressureless manner.

No. of Pages : 29 No. of Claims : 14

(12) PATENT APPLICATION PUBLICATION
(21) Application No.2469/KOLNP/2014 A
(19) INDIA
(22) Date of filing of Application :03/11/2014
(43) Publication Date : 08/05/2015

(54) Title of the invention : ALUMINUM ELECTROLYTIC CAPACITOR AND RUBBER SEAL FOR SAME

(51) International classification :H01G9/008,H01G9/10
(31) Priority Document No :NA
(32) Priority Date :NA
(33) Name of priority country :NA
(86) International Application No :PCT/JP2012/002919
Filing Date :27/04/2012
(87) International Publication No :WO 2013/160964
(61) Patent of Addition to Application Number :NA
Filing Date :NA
(62) Divisional to Application Number :NA
Filing Date :NA

(71)**Name of Applicant :**
1)ELNA CO., LTD.
Address of Applicant :3-8-11, SHIN-YOKOHAMA, KOUHOKU-KU, YOKOHAMA-SHI, Kanagawa 2220033 Japan
(72)**Name of Inventor :**
1)YANAKA, Hiroshi
2)IWANO, Naoto
3)MATSUMURA, Kaori
4)SANTSUKA, Hikaru
5)KIMURA, Naozumi
6)MIZUSHIMA, Hidekazu

(57) Abstract :
A lead terminal is passed through a terminal passage hole of a rubber seal, without imposing an excessive burden such that the characteristics of the capacitor element would be degraded, and while maintaining a state of reliable isolation from the outside air. In an aluminum electrolytic capacitor in which the hole diameter φ2 of a lead wire passage hole (52) is smaller than the outside diameter φ1 of an outside lead wire (22), the outside lead wire (22) being forcibly passed to the outside through lead wire passage hole (52), a conical guide surface (53) of progressively smaller diameter is formed between a round bar mating hole (51) and the lead wire passage hole (52) within a terminal passage hole (5). A passage guide part (222) of progressively smaller diameter from a lead wire body (221) is integrally furnished at an end of the outside lead wire (22) so as to have a smaller diameter φ3 than the hole diameter φ2 of the lead wire passage hole (52), forming a conical sloped surface (223) having a predetermined angle on the peripheral surface of the passage guide part (222).

No. of Pages : 39 No. of Claims : 15

(12) PATENT APPLICATION PUBLICATION
(21) Application No.2470/KOLNP/2014 A
(19) INDIA
(22) Date of filing of Application :03/11/2014
(43) Publication Date : 08/05/2015

(54) Title of the invention : DEVICE AND METHOD FOR SEPARATING VALUE DOCUMENTS, AND VALUE DOCUMENT PROCESSING SYSTEM

(51) International classification :B65H3/04,B65H3/62
(31) Priority Document No :10 2012 013 517.3
(32) Priority Date :06/07/2012
(33) Name of priority country :Germany
(86) International Application No :PCT/EP2013/001969
Filing Date :04/07/2013
(87) International Publication No :WO 2014/005715
(61) Patent of Addition to Application Number :NA
Filing Date :NA
(62) Divisional to Application Number :NA
Filing Date :NA

(71)**Name of Applicant :**
1)GIESECKE & DEVRIENT GMBH
Address of Applicant :Prinzregentenstraβe 159, 81677 MünchenGermany
(72)**Name of Inventor :**
1)MÜLLER, Julian

(57) Abstract :
The invention relates to a device and a corresponding method for separating value documents, in particular bank notes, comprising a support section (1) and a conveyor belt (4) for removing an individual value document (3) from a pile (2) of value documents lying on the support section (1). The separating device has a positioning device (7) via which at least one section of the conveyor belt (4) can be moved to and fro relative to the support section (1) between a first position and a second position. In the first position, the conveyor belt (4) cannot touch the pile (2) lying on the support section (1). In the second position, the conveyor belt (4) can touch the lowest value document (3) of a pile (2) lying on the support section (1) and remove said document at least partially from the pile (2).

No. of Pages : 27 No. of Claims : 15

(12) PATENT APPLICATION PUBLICATION
(19) INDIA
(22) Date of filing of Application :12/11/2014
(21) Application No.2570/KOLNP/2014 A
(43) Publication Date : 08/05/2015

(54) Title of the invention : MARKING LENTICULES FOR REFRACTIVE CORRECTION

(51) International classification :A61F9/008
(31) Priority Document No :NA
(32) Priority Date :NA
(33) Name of priority country :NA
(86) International Application No :PCT/EP2012/060832
Filing Date :07/06/2012
(87) International Publication No :WO 2013/182245
(61) Patent of Addition to Application Number :NA
Filing Date :NA
(62) Divisional to Application Number :NA
Filing Date :NA

(71)**Name of Applicant :**
1)WAVELIGHT GMBH
Address of Applicant :Am Wolfsmantel 5, 91058 ErlangenGermany
(72)**Name of Inventor :**
1)KLENKE, Jörg
2)SKERL, Katrin
3)SEILER, Theo

(57) Abstract :
In certain embodiments, marking a lenticule includes controlling a focus of pulsed laser radiation having ultrashort pulses. A lenticule marking is created in a cornea of an eye with the pulsed laser radiation to mark the lenticule. The lenticule is then created in the cornea with the pulsed laser radiation.

No. of Pages : 21 No. of Claims : 23

(12) PATENT APPLICATION PUBLICATION
(21) Application No.2577/KOLNP/2014 A
(19) INDIA
(22) Date of filing of Application :13/11/2014
(43) Publication Date : 08/05/2015

(54) Title of the invention : METHOD FOR MANUFACTURING TUBE SHAPED PART WITH DIFFERENT DIAMETERS AND FORMING MOLD

(51) International classification :B21D5/01
(31) Priority Document No :2012121474
(32) Priority Date :29/05/2012
(33) Name of priority country :Japan
(86) International Application No :PCT/JP2013/003309
Filing Date :24/05/2013
(87) International Publication No :WO 2013/179628
(61) Patent of Addition to Application Number :NA
Filing Date :NA
(62) Divisional to Application Number :NA
Filing Date :NA

(71)**Name of Applicant :**
1)JFE STEEL CORPORATION
Address of Applicant :2 3 Uchisaiwaicho 2 chome Chiyoda ku Tokyo 1000011 Japan
(72)**Name of Inventor :**
1)SHINMIYA Toyohisa
2)HIGAI Kazuhiko
3)YAMASAKI Yuji
4)OCHI Katsuhiro

(57) Abstract :
A method for manufacturing a tube shaped part with different diameters involves carrying out press formation on a metal sheet blank to form a tube shaped part with different diameters constituted of a small diameter part, a large diameter part, and a diameter changing part between the small diameter part and the large diameter part. The method comprises a step for carrying out press formation on the blank in a U shaped forming mold, forming a U shaped molded product, press forming this in an O shaped forming mold and forming a molded product with a circular cross sectional surface. A mold that is given a vertical wall length longer than the vertical wall part length of the U shaped molded product is used for the U shaped forming mold and a mold in which a mold alignment line takes a downward slanted direction and the ratio (t/D) of the plate thickness (t) of the blank and the diameter (D) of the mold portion corresponding to the small diameter part and the large diameter part is 0.010 = t/D = 0.080 is used for the O shaped forming mold. The compressive strain in the circumferential direction given by (1) formula: compressive strain in circumferential direction = (blank width in direction of blank width forming the tube circumferential direction minus circumferential length of mold)/circumferential length of mold x100 (%) is set at 0.5% or greater.

No. of Pages : 31 No. of Claims : 4

(12) PATENT APPLICATION PUBLICATION
(21) Application No.2578/KOLNP/2014 A
(19) INDIA
(22) Date of filing of Application :13/11/2014
(43) Publication Date : 08/05/2015

(54) Title of the invention : METHOD OF FORMING STRUCTURE HAVING CLOSED CROSS SECTION, AND DEVICE FOR FORMING STRUCTURE HAVING CLOSED CROSS SECTION

(51) International classification	:B21D5/01,B21D47/01,B21D39/02
(31) Priority Document No	:2012120527
(32) Priority Date	:28/05/2012
(33) Name of priority country	:Japan
(86) International Application No	:PCT/JP2013/003284
Filing Date	:23/05/2013
(87) International Publication No	:WO 2013/179617
(61) Patent of Addition to Application Number	:NA
Filing Date	:NA
(62) Divisional to Application Number	:NA
Filing Date	:NA

(71)**Name of Applicant :**
1)JFE STEEL CORPORATION
Address of Applicant :2 3 Uchisaiwaicho 2 chome Chiyoda ku Tokyo 1000011 Japan
(72)**Name of Inventor :**
1)HIGAI Kazuhiko
2)SHINMIYA Toyohisa
3)YAMASAKI Yuji

(57) Abstract :
The purpose of the present invention is to make it possible to easily and dimensionally accurately form a structure having a closed cross section from a flat plate material. In a first step of press forming, the workpiece (1) is formed in the longitudinal direction and the width direction into the curvature form required for the final closed cross section shape. In a subsequent second step, the bottom parts (2, 3) of the workpiece (1) formed in the first step are sandwiched in the plate thickness direction by a punch (15) and a pad (16), and thereby, the workpiece is bent such that the left and right side walls (4, 5, 6) become closer to each other. Subsequently, in a third step, a pair of flange parts (7, 8) are pressed together in a state in which the bottom parts (2, 3) of the workpiece (1) formed in the second step are placed on the pad (16), and a die cavity having the same spatial configuration as the final closed cross section shape is defined by a support surface which supports the aforementioned bottom parts of the pad (16) and a push surface which pushes the left and right side walls of a pair of pressing cams (26). Further, the pair of flanges (7, 8) is depressed towards the cavity by the depressing part (31) of a second punch (21) arranged above the pair of flanges (7, 8).

No. of Pages : 33 No. of Claims : 3

(12) PATENT APPLICATION PUBLICATION
(21) Application No.2579/KOLNP/2014 A
(19) INDIA
(22) Date of filing of Application :13/11/2014
(43) Publication Date : 08/05/2015

(54) Title of the invention : METHOD OF FORMING STRUCTURE HAVING CLOSED CROSS SECTION, AND DEVICE FOR FORMING STRUCTURE HAVING CLOSED CROSS SECTION

(51) International classification :B21D5/01,B21D51/16
(31) Priority Document No :2012120528
(32) Priority Date :28/05/2012
(33) Name of priority country :Japan
(86) International Application No :PCT/JP2013/003285
Filing Date :23/05/2013
(87) International Publication No :WO 2013/179618
(61) Patent of Addition to Application Number :NA
Filing Date :NA
(62) Divisional to Application Number :NA
Filing Date :NA

(71)**Name of Applicant :**
1)JFE STEEL CORPORATION
Address of Applicant :2 3 Uchisaiwaicho 2 chome Chiyoda ku Tokyo 1000011 Japan
(72)**Name of Inventor :**
1)HIGAI Kazuhiko
2)SHINMIYA Toyohisa
3)YAMASAKI Yuji

(57) Abstract :
The purpose of the present invention is to make it possible to easily and dimensionally accurately form a structure having a closed cross section from a flat plate material. In a first step of press forming, the workpiece (1) is formed in the longitudinal direction and the width direction into the curvature form required for the final closed cross section shape, and a bending guide line (G) is imparted at the position where a bending line will be formed in the final closed cross section shape. In a subsequent second step, the bottom parts (2, 3) of the workpiece (1) formed in the first step are sandwiched in the plate thickness direction by a punch (15) and a pad (16), and the punch is pushed between the pair of dies (17), and thereby, the workpiece is bent such that the left and right side walls become closer to each other. Subsequently, in a third step, a plug (20) having the same outer peripheral shape as that of the final closed cross section form is placed on the bottom parts (2, 3) of the workpiece (1) formed in the second step, and by pressing the bottom parts (2, 3) and the left and right side walls (5, 6) against the outer periphery of the plug (20), the bottom parts (2 3) and the left and right side walls (5, 6) are bent with the bending guide line as the boundary line.

No. of Pages : 41 No. of Claims : 5

(12) PATENT APPLICATION PUBLICATION
(21) Application No.1231/KOL/2013 A
(19) INDIA
(22) Date of filing of Application :30/10/2013
(43) Publication Date : 08/05/2015

(54) Title of the invention : A DEVICE FOR PRODUCING SQUARE STICKS OF VARIABLE THICKNESS FROM BAMBOO STRIPS.

(51) International classification	:B27J 1/00
(31) Priority Document No	:NA
(32) Priority Date	:NA
(33) Name of priority country	:NA
(86) International Application No	:NA
Filing Date	:NA
(87) International Publication No	: NA
(61) Patent of Addition to Application Number	:NA
Filing Date	:NA
(62) Divisional to Application Number	:NA
Filing Date	:NA

(71)**Name of Applicant :**
1)NATIONAL INSTITUTE OF TECHONOLOGY AGARTALA
Address of Applicant :BARJALA, JIRANIA,TRIPURA(WEST),India
2)TRIPURA BAMBOO MISSION SOCIETY
(72)**Name of Inventor :**
1)MAJUMDER, ABHIK

(57) Abstract :
The present invention relates to a device for producing square sticks of variable thickness such as required for incense sticks from bamboo strips and more particularly to providing a manual pedal operated device to produce square bamboo sticks of uniform section in the thickness range of 1.5 to 2 mm by splitting bamboo strips for producing incense sticks with improved quality, less rejection and enhanced productivity. The device uses pedal operated chain sprocket drive in operative communication with meshing gears to rotate paired rollers at feeding and delivery end for push and pull action respectively to the feed stock of bamboo strips of desired size subjected to splitting action by a set of blades/cutters with adjustable gap disposed between the front and back pair of rollers, with variable feed rate obtained by suitably varying pedaling operation. This is a low cost green technology based device suitable for small industries in rural areas where no electricity is available.

No. of Pages : 20 No. of Claims : 11

(12) PATENT APPLICATION PUBLICATION
(19) INDIA
(22) Date of filing of Application :05/11/2014
(21) Application No.2500/KOLNP/2014 A
(43) Publication Date : 08/05/2015

(54) Title of the invention : TRIAZOLES AS KV3 INHIBITORS

(51) International classification :C07D405/14,C07D401/04,C07D249/12
(31) Priority Document No :1209013.0
(32) Priority Date : 22/05/2012
(33) Name of priority country :U.K.
(86) International Application No :PCT/GB2013/051347
Filing Date : 22/05/2013
(87) International Publication No :WO 2013/175215
(61) Patent of Addition to Application Number :NA
Filing Date :NA
(62) Divisional to Application Number :NA
Filing Date :NA

(71)**Name of Applicant :**
1)AUTIFONY THERAPEUTICS LIMITED
Address of Applicant :B205 ImperialCollege Incubator, Level 1 BessemerBuilding, ImperialCollege, London SW7 2AZ U.K.
(72)**Name of Inventor :**
1)MARASCO, Agostino
2)ALVARO, Giuseppe
3)DECOR, Anne
4)HAMPRECHT, Dieter
5)DAMBRUOSO, Paolo
6)TOMMASI, Simona

(57) Abstract :
Compounds of formula (I) are of use in the modulation of Kv3.1, Kv.3.2 and Kv3.3 channels and have utility in the treatment or prevention of related disorders.

No. of Pages : 117 No. of Claims : 47

(12) PATENT APPLICATION PUBLICATION
(19) INDIA
(22) Date of filing of Application :05/11/2014
(21) Application No.2503/KOLNP/2014 A
(43) Publication Date : 08/05/2015

(54) Title of the invention : NOVEL BACILLUS SUBTILIS

(51) International classification :C12N1/20,A23K1/16,C12R1/125
(31) Priority Document No :10-2012-0035288
(32) Priority Date :05/04/2012
(33) Name of priority country :Republic of Korea
(86) International Application No :PCT/KR2013/002826
Filing Date :04/04/2013
(87) International Publication No :WO 2013/151361
(61) Patent of Addition to Application Number :NA
Filing Date :NA
(62) Divisional to Application Number :NA
Filing Date :NA

(71)**Name of Applicant :**
1)CJ CHEILJEDANG CORPORATION
Address of Applicant :500, Namdaemunro 5-ga, Jung-gu, Seoul 100-749 Republic of Korea
(72)**Name of Inventor :**
1)BACK, SeungHee
2)YANG, Si Yong
3)WOO, SeoHyung
4)SEO, HyoSeel

(57) Abstract :
The present invention relates to a novel Bacillus subtilis CJMPB150 (KCCM11268P) strain, and a probiotics formulation comprising same. More specifically, the present invention relates to the Bacillus subtilis strain and the probiotics formulation, which has superior complex digestive enzyme generation capacity for simultaneously secreting cellulase, xylanase, mannanase, amylase, protease, and lipase, thereby having excellent ability for breaking down digestion-resistant carbohydrates, has excellent heat resistance by having a high rate of endospore formation under high-temperature conditions, and has a high survival rate inside the digestive systems of livestock by having excellent acid resistance and bile resistance.

No. of Pages : 40 No. of Claims : 5

(12) PATENT APPLICATION PUBLICATION
(19) INDIA
(22) Date of filing of Application :05/11/2014

(21) Application No.2504/KOLNP/2014 A
(43) Publication Date : 08/05/2015

(54) Title of the invention : APPARATUS FOR THE DELIVERY OF A PRODUCT

(51) International classification :G06Q20/32,G07F13/02,G07F11/00
(31) Priority Document No :1206369.9
(32) Priority Date :11/04/2012
(33) Name of priority country :U.K.
(86) International Application No :PCT/GB2013/050916
Filing Date :10/04/2013
(87) International Publication No :WO 2013/153378
(61) Patent of Addition to Application Number :NA
Filing Date :NA
(62) Divisional to Application Number :NA
Filing Date :NA

(71)**Name of Applicant :**
1)MICROS SYSTEMS UK LIMITED
Address of Applicant :6-8 The Grove, Slough Berkshire SL1 1QP U.K.
(72)**Name of Inventor :**
1)BROOME, Paul

(57) Abstract :
Apparatus for the delivery of a product comprising a delivery outlet, delivery control means, remote command means and a mobile communications device, in which the delivery control means is connected to the remote command means via a communications network, and is adapted to activate the delivery outlet when in receipt of an activation signal from said remote command means, in which the mobile communications device is connectable to the remote command means via a communications network, and in which the remote command means is adapted to send said activation signal to said delivery control means when in receipt of an activation request signal from said mobile communications device.

No. of Pages : 40 No. of Claims : 13

(12) PATENT APPLICATION PUBLICATION
(19) INDIA
(22) Date of filing of Application :14/11/2014
(21) Application No.2601/KOLNP/2014 A
(43) Publication Date : 08/05/2015

(54) Title of the invention : DNA-PK INHIBITORS

(51) International classification :C07D401/14,C07D405/14,C07D413/14
(31) Priority Document No :61/637,512
(32) Priority Date :24/04/2012
(33) Name of priority country :U.S.A.
(86) International Application No :PCT/US2013/037811
Filing Date :23/04/2013
(87) International Publication No :WO 2013/163190
(61) Patent of Addition to Application Number :NA
Filing Date :NA
(62) Divisional to Application Number :NA
Filing Date :NA

(71)**Name of Applicant :**
1)VERTEX PHARMACEUTICALS INCORPORATED
Address of Applicant :130 Waverly Street, Cambridge, MA 02139 U.S.A.
(72)**Name of Inventor :**
1)CHARIFSON, Paul, S.
2)COTTRELL, Kevin, Michael
3)DENG, Hongbo
4)DUFFY, John, P.
5)GAO, Huai
6)GIROUX, Simon
7)GREEN, Jeremy
8)JACKSON, Katrina, Lee
9)MAXWELL, John, Patrick
10)MORRIS, Mark, A.
11)PIERCE, Albert, Charles
12)WAAL, Nathan, D.
13)KENNEDY, Joseph, M.
14)LAUFFER, David, J.
15)LEDEBOER, Mark, Willem
16)LI, Pan
17)XU, Jinwang

(57) Abstract :
The present invention relates to compounds of following formula (I) useful as inhibitors of DNA-PK. The invention also provides pharmaceutically acceptable compositions comprising said compounds and methods of using the compositions in the treatment of various disease, conditions, or disorders, such as cancer.

No. of Pages : 425 No. of Claims : 57

(12) PATENT APPLICATION PUBLICATION
(21) Application No.2512/KOLNP/2014 A
(19) INDIA
(22) Date of filing of Application :07/11/2014
(43) Publication Date : 08/05/2015

(54) Title of the invention : ELECTRODE BLOCK, LAYERED BATTERY, AND ASSEMBLY METHOD FOR LAYERED BATTERY

(51) International classification	:H01M10/04,H01M2/02,H01M2/18
(31) Priority Document No	:PCT/JP2012/082586
(32) Priority Date	:16/12/2012
(33) Name of priority country	:Japan
(86) International Application No	:PCT/JP2013/082893
Filing Date	:07/12/2013
(87) International Publication No	:WO 2014/092031
(61) Patent of Addition to Application Number	:NA
Filing Date	:NA
(62) Divisional to Application Number	:NA
Filing Date	:NA

(71)**Name of Applicant :**
1)EXERGY POWER SYSTEMS, INC.
Address of Applicant :Komaba Open Laboratory 501, Komaba Research Campus, The University of Tokyo, 6-1, Komaba 4-chome, Meguro-ku, Tokyo 1538904 Japan
(72)**Name of Inventor :**
1)TSUTSUMI, Kaduo

(57) Abstract :
The present invention minimizes increases in temperature within a battery, prevents contact failure, prevents short circuits between electrodes, and provides a battery that is easy to assemble. In the present invention, an electrode block (21) is provided with: an electrode group (23) in which a positive electrode (23a), a negative electrode (23b), and separators (23ca, 23cb) that are arranged between the positive electrode and the negative electrode are layered; a lid member (24) that is provided to both ends of the electrode group in the layering direction thereof; and a first holding member (22a) that is attached to the outer surface of the electrode group and the lid member. The first holding member is electrically connected to a first electrode that is either the positive electrode or the negative electrode, and is not electrically connected to a second electrode that is the other electrode of the positive electrode and the negative electrode. A hole that is provided to the electrode group and the lid member forms a through hole (25), and a second holding member (22b) is attached to the through hole in order to produce the electrode block. The electrode block is accommodated in a layered state in an external body and a collector is inserted in the through hole to produce a layered battery.

No. of Pages : 69 No. of Claims : 19

(12) PATENT APPLICATION PUBLICATION
(19) INDIA
(22) Date of filing of Application :07/11/2014
(21) Application No.2513/KOLNP/2014 A
(43) Publication Date : 08/05/2015

(54) Title of the invention : AGGREGATE PARTICLES

(51) International classification :A61K9/14,A61K9/16,A61K45/06
(31) Priority Document No :61/623,672
(32) Priority Date :13/04/2012
(33) Name of priority country :U.S.A.
(86) International Application No :PCT/EP2013/057555
Filing Date :11/04/2013
(87) International Publication No :WO 2013/153146
(61) Patent of Addition to Application Number :NA
Filing Date :NA
(62) Divisional to Application Number :NA
Filing Date :NA

(71)**Name of Applicant :**
1)GLAXOSMITHKLINE INTELLECTUAL PROPERTY DEVELOPMENT LIMITED
Address of Applicant :980 Great West Road, Brentford, Middlesex TW8 9GS U.K.
(72)**Name of Inventor :**
1)VAN OORT, Michiel Mary
2)HONG, John N

(57) Abstract :
The present invention relates to aggregate particles comprising nanoparticulate drug particles. In particular, the present invention is directed to aggregate particles comprising nanoparticulate drug particles of umeclidinium bromide and optionally vilanteroltrifenatate and/or fluticasone furoate. Aggregate particles of the present invention may further comprise nanoparticulate excipient particles and one or more binders. The invention also relates to powder compositions suitable for inhalation that comprise said aggregate particles, processes of producing said aggregate particles, and use of said powder compositions in the treatment of respiratory diseases, such as asthma and COPD.

No. of Pages : 61 No. of Claims : 58

(12) PATENT APPLICATION PUBLICATION
(19) INDIA
(22) Date of filing of Application :17/11/2014
(21) Application No.2611/KOLNP/2014 A
(43) Publication Date : 08/05/2015

(54) Title of the invention : METHODS AND SYSTEMS FOR ADJUSTING THE COMPOSITION OF A BINDER SYSTEM FOR USE IN MAKING FIBERGLASS PRODUCTS

(51) International classification	:D04H1/58,D04H1/4218,D04H1/655
(31) Priority Document No	:61/642,259
(32) Priority Date	:03/05/2012
(33) Name of priority country	:U.S.A.
(86) International Application No	:PCT/US2013/039268
Filing Date	:02/05/2013
(87) International Publication No	:WO 2013/166286
(61) Patent of Addition to Application Number	:NA
Filing Date	:NA
(62) Divisional to Application Number	:NA
Filing Date	:NA

(71)**Name of Applicant :**
1)GEORGIA-PACIFIC CHEMICALS LLC
Address of Applicant :133 Peachtree Street NE, Atlanta, Georgia 30303 U.S.A.
(72)**Name of Inventor :**
1)SHOEMAKE, Kelly A.
2)BREYER, Robert A.

(57) Abstract :
Methods and systems for preparing a binder system for use in producing fiberglass products are provided. The method can include combining at least a first resin and a component to produce a first binder system. The component can include a second resin, an additive, or a combination thereof. At least a portion of the first binder system can be applied to a first plurality of fibers. One or more process variables can be monitored. The one or more process variables can be evaluated. An amount of the first resin, the component, or both combined with one another can be adjusted in response to the evaluation of the one or more monitored process variables to produce a second binder system.

No. of Pages : 49 No. of Claims : 20

(12) PATENT APPLICATION PUBLICATION
(19) INDIA
(22) Date of filing of Application :17/11/2014
(21) Application No.2612/KOLNP/2014 A
(43) Publication Date : 08/05/2015

(54) Title of the invention : AMMONIA GAS GENERATION FROM UREA FOR LOW TEMPERATURE PROCESS REQUIREMENTS

(51) International classification :B01J19/00
(31) Priority Document No :13/455,459
(32) Priority Date :25/04/2012
(33) Name of priority country :U.S.A.
(86) International Application No :PCT/US2012/035237
Filing Date :26/04/2012
(87) International Publication No :WO 2013/162580
(61) Patent of Addition to Application Number :NA
Filing Date :NA
(62) Divisional to Application Number :NA
Filing Date :NA

(71)**Name of Applicant :**
1)FUEL TECH, INC.
Address of Applicant :27601 Bella Vista Parkway, Warrenville, IL60555 U.S.A.
(72)**Name of Inventor :**
1)SUN, William, H.
2)BOYLE, John, M.
3)CARMIGNANI, Paul, G.
4)MAYHEW, Scott, M.

(57) Abstract :
A process for providing an ammonia feed includes (i) a thermal gasification stage and (ii) a controlled catalyzed hydrolysis stage. In stage (i) urea, water and heated gases are introduced into a gasification chamber upstream at a temperature and for a time sufficient to gasify the solution to a first stage gas stream comprising ammonia and isocyanic acid. The first stage gas stream is introduced to a stage (ii) catalytic hydrolysis reactor wherein the isocyanic acid) is hydrolyzed to ammonia with carbon dioxide as a byproduct. The process is provides ammonia for a low-temperature operation as needed.

No. of Pages : 21 No. of Claims : 4

(12) PATENT APPLICATION PUBLICATION
(21) Application No.2514/KOLNP/2014 A
(19) INDIA
(22) Date of filing of Application :07/11/2014
(43) Publication Date : 08/05/2015

(54) Title of the invention : CONTROLLER FOR OPTICALLY-SWITCHABLE WINDOWS

(51) International classification :G02F1/15,E06B9/24,G09G5/00
(31) Priority Document No :13/449,248
(32) Priority Date :17/04/2012
(33) Name of priority country :U.S.A.
(86) International Application No :PCT/US2013/034998
Filing Date :02/04/2013
(87) International Publication No :WO 2013/158365
(61) Patent of Addition to Application Number :NA
Filing Date :NA
(62) Divisional to Application Number :NA
Filing Date :NA

(71)**Name of Applicant :**
1)VIEW, INC.
Address of Applicant :195 South Milpitas Boulevard, Milpitas, California 95035 U.S.A.
(72)**Name of Inventor :**
1)BROWN, Stephen C.

(57) Abstract :
This disclosure provides a window controller that includes a command-voltage generator configured to generate a command voltage signal. The window controller also includes a power-signal generator configured to generate a power signal based on the command voltage signal. The power signal is configured to drive an optically-switchable device on a substantially transparent substrate. In some embodiments, the power-signal generator is configured to generate a power signal having a power profile that includes one or more power profile portions, each power profile portion having one or more voltage or current characteristics.

No. of Pages : 64 No. of Claims : 96

(12) PATENT APPLICATION PUBLICATION
(21) Application No.2515/KOLNP/2014 A
(19) INDIA
(22) Date of filing of Application :07/11/2014
(43) Publication Date : 08/05/2015

(54) Title of the invention : BRAKE CONTROLLER, ELEVATOR SYSTEM AND A METHOD FOR PERFORMING AN EMERGENCY STOP WITH AN ELEVATOR HOISTING MACHINE DRIVEN WITH A FREQUENCY CONVERTER

(51) International classification :B66B1/32,B66B5/02
(31) Priority Document No :20125596
(32) Priority Date :31/05/2012
(33) Name of priority country :Finland
(86) International Application No :PCT/FI2013/050541
Filing Date :20/05/2013
(87) International Publication No :WO 2013/178872
(61) Patent of Addition to Application Number :NA
Filing Date :NA
(62) Divisional to Application Number :NA
Filing Date :NA

(71)**Name of Applicant :**
1)KONE CORPORATION
Address of Applicant :Kartanontie 1, FI-00330 Helsinki Finland
(72)**Name of Inventor :**
1)KATTAINEN, Ari
2)RAASSINA, Pasi
3)SAARIKOSKI, Tapio
4)STOLT, Lauri
5)NAKARI, Arto
6)KALLIONIEMI, Antti

(57) Abstract :
The invention relates to a brake controller (7), an elevator system and also a method for performing an emergency stop. The brake controller (7) comprises an input (29A, 29B) for connecting the brake controller to the DC intermediate circuit (2A, 2B) of the frequency converter driving the hoisting machine of the elevator, an output (4A, 4B) for connecting the brake controller (7) to the electromagnet (10) of the brake, a switch (8A, 8B) for supplying electric power from the DC intermediate circuit (2A, 2B) of the frequency converter driving the hoisting machine of the elevator via the output (4A, 4B) to the electromagnet (10) of a brake (9), and also a processor (11) with which the operation of the brake controller (7) is controlled by producing control pulses in the control pole of the switch (8A, 8B) of the brake controller.

No. of Pages : 31 No. of Claims : 20

(12) PATENT APPLICATION PUBLICATION
(19) INDIA
(22) Date of filing of Application :07/11/2014
(21) Application No.2517/KOLNP/2014 A
(43) Publication Date : 08/05/2015

(54) Title of the invention : METHOD AND APPARATUS FOR INTENT MODELING AND PREDICTION

(51) International classification :G06F17/24,G06Q30/00
(31) Priority Document No :61/621,903
(32) Priority Date :09/04/2012
(33) Name of priority country :U.S.A.
(86) International Application No :PCT/US2013/035814
Filing Date :09/04/2013
(87) International Publication No :WO 2013/155092
(61) Patent of Addition to Application Number :NA
Filing Date :NA
(62) Divisional to Application Number :NA
Filing Date :NA

(71)**Name of Applicant :**
1)24/7 CUSTOMER, INC.
Address of Applicant :910 E. Hamilton Ave., Ste 240, Campbell, CA 95008-0610 U.S.A.
(72)**Name of Inventor :**
1)VIJAYARAGHAVAN, Ravi
2)KULKARNI, Subhash, Ramchandra
3)ADUSUMILLI, Kranthi, Mitra

(57) Abstract :
A method and apparatus enables identification of customer characteristics and behavior, and predicts the customers intent. Such prediction can be used to adopt various business strategies to increase the chances of conversion of customer interaction to a sale, and thereby can increase revenue, and/or enhance the customers experience.

No. of Pages : 32 No. of Claims : 21

(12) PATENT APPLICATION PUBLICATION
(19) INDIA
(22) Date of filing of Application :17/11/2014
(21) Application No.2616/KOLNP/2014 A
(43) Publication Date : 08/05/2015

(54) Title of the invention : COMPOSITE PRODUCTS MADE WITH LEWIS ACID CATALYZED BINDER COMPOSITIONS THAT INCLUDE TANNINS AND MULTIFUNCTIONAL ALDEHYDES

(51) International classification :B27N3/00,C08H7/00,C09J161/34
(31) Priority Document No :61/639,281
(32) Priority Date :27/04/2012
(33) Name of priority country :U.S.A.
(86) International Application No :PCT/US2013/037886
Filing Date :24/04/2013
(87) International Publication No :WO 2013/163242
(61) Patent of Addition to Application Number :NA
Filing Date :NA
(62) Divisional to Application Number :NA
Filing Date :NA

(71)**Name of Applicant :**
1)GEORGIA-PACIFIC CHEMICALS LLC
Address of Applicant :133 Peachtree Street NE, Atlanta, Georgia 30303 U.S.A.
(72)**Name of Inventor :**
1)WILLIAMSON, Bobby L.
2)JING, Feng

(57) Abstract :
Composite products made with binder compositions that include one or more tannins, one or more multifunctional aldehydes, and one or more Lewis acids and methods for making same. The method can include contacting a plurality of substrates with the binder composition and at least partially curing the binder composition to produce a composite product. The one or more multifunctional aldehyde compounds can include (1) two or more carbon atoms and two or more aldehyde functional groups, or (2) two or more carbon atoms, at least one aldehyde functional group, and at least one functional group other than an aldehyde functional group. A carbon atom of at least one aldehyde functional group can have a first bond with a first tannin molecule and a second bond with (a) the first tannin molecule, (b) a second tannin molecule, or (c) an oxygen atom of the at least one aldehyde functional group.

No. of Pages : 60 No. of Claims : 20

(12) PATENT APPLICATION PUBLICATION
(19) INDIA
(22) Date of filing of Application :17/11/2014
(21) Application No.2617/KOLNP/2014 A
(43) Publication Date : 08/05/2015

(54) Title of the invention : PRE-LOADED INJECTOR FOR USE WITH INTRAOCULAR LENS

(51) International classification :A61F2/16
(31) Priority Document No :61/636,512
(32) Priority Date :20/04/2012
(33) Name of priority country :U.S.A.
(86) International Application No :PCT/US2013/037457
Filing Date :19/04/2013
(87) International Publication No :WO 2013/159045
(61) Patent of Addition to Application Number :NA
Filing Date :NA
(62) Divisional to Application Number :NA
Filing Date :NA

(71)**Name of Applicant :**
1)GULATI, Vijay
Address of Applicant :1911 Wallker Avenue, Monrovia, CA91016 U.S.A.
2)ALAGIASINGAM, Sushanth
(72)**Name of Inventor :**
1)GULATI, Vijay
2)ALAGIASINGAM, Sushanth

(57) Abstract :
An injector (100) folding and injecting a flexible intraocular lens (400) into the eye of a patient is described. The injector is configured to be loaded with the intraocular lens, and optionally, an aqueous solution, before the injector and lens are sterilized. The injector includes a lens compartment (100,200) that is configured to prevent leakage of the aqueous fluid from the lens compartment caused by autoclaving/sterilization.

No. of Pages : 33 No. of Claims : 7

(12) PATENT APPLICATION PUBLICATION
(21) Application No.2431/KOLNP/2014 A
(19) INDIA
(22) Date of filing of Application :30/10/2014
(43) Publication Date : 08/05/2015

(54) Title of the invention : MULTI-ELECTRODE CATHETER ASSEMBLIES FOR RENAL NEUROMODULATION AND ASSOCIATED SYSTEMS AND METHODS

(51) International classification	:A61B18/14,A61M25/01,A61B18/00
(31) Priority Document No	:61/646,218
(32) Priority Date	:11/05/2012
(33) Name of priority country	:U.S.A.
(86) International Application No	:PCT/US2013/030207
Filing Date	:11/03/2013
(87) International Publication No	:WO 2013/169340
(61) Patent of Addition to Application Number	:NA
Filing Date	:NA
(62) Divisional to Application Number	:NA
Filing Date	:NA

(71)**Name of Applicant :**
1)MEDTRONIC ARDIAN LUXEMBOURG SARL
Address of Applicant :102 rue des Maraichers, L-2124 Luxembourg,Luxembourg
(72)**Name of Inventor :**
1)CHANG, William W
2)GOSHGARIAN, JUSTIN
3)MAUCH, KEVIN
4)RIVERA, LEONILA
5)SHIN, SUKYOUNG
6)TRAN, DON H

(57) Abstract :
Catheter apparatuses and systems for achieving renal neuromodulation by intravascular access are disclosed herein. One aspect of the present technology, for example, is directed to a treatment device having a multi-electrode array configured to be delivered to a renal blood vessel. The array is selectively transformable between a delivery or low-profile state (e.g., a generally straight shape) and a deployed state (e.g., a radially expanded, generally spiral/helical shape). The multi-electrode array is sized and shaped so that the electrodes or energy delivery elements contact an interior wall of the renal blood vessel when the array is in the deployed (e.g., spiral/helical) state. The electrodes or energy delivery elements are configured for direct and/or indirect application of thermal and/or electrical energy to heat or otherwise electrically modulate neural fibers that contribute to renal function.

No. of Pages : 52 No. of Claims : 28

(12) PATENT APPLICATION PUBLICATION
(19) INDIA
(22) Date of filing of Application :10/11/2014
(21) Application No.2533/KOLNP/2014 A
(43) Publication Date : 08/05/2015

(54) Title of the invention : APPLICATIONS FOR CONTROLLING OPTICALLY SWITCHABLE DEVICES

(51) International classification :H04Q9/00,G06F9/44
(31) Priority Document No :61/624,175
(32) Priority Date :13/04/2012
(33) Name of priority country :U.S.A.
(86) International Application No :PCT/US2013/036456
Filing Date :12/04/2013
(87) International Publication No :WO 2013/155467
(61) Patent of Addition to Application Number :NA
Filing Date :NA
(62) Divisional to Application Number :NA
Filing Date :NA

(71)**Name of Applicant :**
1)VIEW, INC.
Address of Applicant :195 South Milpitas Blvd., Milpitas, California 95035 U.S.A.
(72)**Name of Inventor :**
1)SHRIVASTAVA, Dhairya
2)MARQUES, Todd
3)BROWN, Stephen C.

(57) Abstract :
Software applications are used for controlling the optical state of one or more optically switchable windows or other optical products installed in a structure such as building. The applications permit users to send and/or receive data and/or commands for controlling the switchable optical products. In some embodiments, the applications provide an interface with a window network controller, which directly or indirectly controls windows in a structure. Relevant processing involving the application may include user authentication, commissioning, adaptive control, and decisions on whether to permit an action or change requested by a user. In some embodiments, the application allows users to directly control the tint state of one or more tintable windows. In some embodiments, the application allows users to change a rule or property associated with controlling a switchable optical product.

No. of Pages : 88 No. of Claims : 28

(12) PATENT APPLICATION PUBLICATION
(19) INDIA
(22) Date of filing of Application :10/11/2014
(21) Application No.2534/KOLNP/2014 A
(43) Publication Date : 08/05/2015

(54) Title of the invention : ENHANCING PROTEIN STABILITY IN TRANSGENIC PLANTS

(51) International classification :C12N15/82
(31) Priority Document No :61/623,794
(32) Priority Date :13/04/2012
(33) Name of priority country :U.S.A.
(86) International Application No :PCT/US2013/030953
Filing Date :13/03/2013
(87) International Publication No :WO 2013/154730
(61) Patent of Addition to Application Number :NA
Filing Date :NA
(62) Divisional to Application Number :NA
Filing Date :NA

(71)**Name of Applicant :**
1)THE ROCKEFELLER UNIVERSITY
Address of Applicant :1230 York Avenue, New York, NY 10021 U.S.A.
(72)**Name of Inventor :**
1)CHUA, Nam-Hai
2)JANG, In Cheol
3)NIU, Qiwen
4)DENG, Shulin

(57) Abstract :
The present invention provides compositions and methods for enhancing protein stability in transgenic plants. The compositions are nucleic acid constructs which encode fusion proteins, fusion proteins, transgenic plant cells and transgenic plants. A fusion protein in accordance with the present invention comprises a protein of interest and a UBA1 or UBA2 domain of an Arabidopsis RAD23 protein. The methods use the nucleic acid constructs to produce fusion proteins in transgenic plant cells or transgenic plants. The fusion proteins have greater stability than the protein of interest and have the same function as the proteins of interest.

No. of Pages : 53 No. of Claims : 14

(12) PATENT APPLICATION PUBLICATION
(19) INDIA
(22) Date of filing of Application :10/11/2014
(21) Application No.2535/KOLNP/2014 A
(43) Publication Date : 08/05/2015

(54) Title of the invention : CAPSULE

(51) International classification :B65D85/804
(31) Priority Document No :TV2012A000082
(32) Priority Date :10/05/2012
(33) Name of priority country :Italy
(86) International Application No :PCT/IB2012/055029
Filing Date :21/09/2012
(87) International Publication No :WO 2013/167940
(61) Patent of Addition to Application Number :NA
Filing Date :NA
(62) Divisional to Application Number :NA
Filing Date :NA

(71)**Name of Applicant :**
1)HAUSBRANDT TRIESTE 1892 SPA
Address of Applicant :Via Foscarini, 52, I-31040 NervesadellaBattaglia (TV) Italy
(72)**Name of Inventor :**
1)ZANETTI, Fabrizio

(57) Abstract :
Capsule (10) for the preparation of a beverage from a powdery or granular raw material comprising a body (12) made of polymer material. The body (12) has a top edge (14) and a bottom edge (16), at least one of which (14, 16) is provided with a foil (18, 20) suitable for sealing said edge. The foil is provided with a tongue (22, 24).

No. of Pages : 10 No. of Claims : 7

(12) PATENT APPLICATION PUBLICATION
(21) Application No.2634/KOLNP/2014 A
(19) INDIA
(22) Date of filing of Application :18/11/2014
(43) Publication Date : 08/05/2015

(54) Title of the invention : NOISE BURST ADAPTATION OF SECONDARY PATH ADAPTIVE RESPONSE IN NOISE-CANCELING PERSONAL AUDIO DEVICES

(51) International classification :G10K11/178
(31) Priority Document No :61/645,138
(32) Priority Date :10/05/2012
(33) Name of priority country :U.S.A.
(86) International Application No :PCT/US2013/036531
Filing Date :15/04/2013
(87) International Publication No :WO 2013/169436
(61) Patent of Addition to Application Number :NA
Filing Date :NA
(62) Divisional to Application Number :NA
Filing Date :NA

(71)**Name of Applicant :**
1)CIRRUS LOGIC, INC.
Address of Applicant :800 W 6th St, Austin, TX78701 U.S.A.
(72)**Name of Inventor :**
1)HENDRIX, Jon, D.
2)ALDERSON, Jeffrey
3)MILLER, Antonio, John
4)LU, Yang

(57) Abstract :
A personal audio device, such as a wireless telephone, generates an anti-noise signal from an error microphone signal and injects the anti-noise signal into the speaker or other transducer output to cause cancellation of ambient audio sounds. The error microphone is also provided proximate the speaker to provide an error signal indicative of the effectiveness of the noise cancellation. A secondary path estimating adaptive filter is used to estimate the electro-acoustical path from the noise canceling circuit through the transducer so that source audio can be removed from the error signal. Noise bursts are injected intermittently and the adaptation of the secondary path estimating adaptive filter controlled, so that the secondary path estimate can be maintained irrespective of the presence and amplitude of the source audio.

No. of Pages : 39 No. of Claims : 42

(12) PATENT APPLICATION PUBLICATION
(19) INDIA
(22) Date of filing of Application :11/11/2014
(21) Application No.2543/KOLNP/2014 A
(43) Publication Date : 08/05/2015

(54) Title of the invention : INTEGRATED LOOP STRUCTURE FOR RADIO FREQUENCY IDENTIFICATION

(51) International classification :H01Q1/22,G06K19/077,H01Q7/00
(31) Priority Document No :61/635,326
(32) Priority Date :19/04/2012
(33) Name of priority country :U.S.A.
(86) International Application No :PCT/EP2013/057601
Filing Date :11/04/2013
(87) International Publication No :WO 2013/156389
(61) Patent of Addition to Application Number :NA
Filing Date :NA
(62) Divisional to Application Number :NA
Filing Date :NA

(71)**Name of Applicant :**
1)SMARTRAC IP B.V.
Address of Applicant :Strawinskylaan 851, NL-1077 XX Amsterdam Netherlands
(72)**Name of Inventor :**
1)KOSKELAINEN, Tuomas

(57) Abstract :
An assembly for a radio frequency (RF) communication circuit comprising an electrically insulating substrate having a first side and a second side. A first electrically conductive structure is arranged on the first side of the substrate, wherein the first electrically conductive structure has the structure of a split loop, wherein the split loop structure comprises a first end and a second end. The RF communication circuit is arranged to be attached to a site for the RF communication circuit between the first end and the second end. The assembly further comprises a second electrically conductive structure arranged on the second side of the substrate. The second electrically conductive structure is arranged with respect to the first electrically conductive structure in such a manner that the site for the RF communication circuit overlaps the second electrically conductive structure in order to increase the capacitance of the assembly for the RF communication circuit.

No. of Pages : 35 No. of Claims : 24

(12) PATENT APPLICATION PUBLICATION
(19) INDIA
(22) Date of filing of Application :11/11/2014
(21) Application No.2544/KOLNP/2014 A
(43) Publication Date : 08/05/2015

(54) Title of the invention : WIND ENERGY SYSTEM AND METHOD FOR USING SAME

(51) International classification :F03D1/04,F03D1/06,F03D11/02
(31) Priority Document No :61/639,952
(32) Priority Date :29/04/2012
(33) Name of priority country :U.S.A.
(86) International Application No :PCT/IB2013/001037
Filing Date :07/04/2013
(87) International Publication No:WO 2013/164691
(61) Patent of Addition to Application Number :NA
Filing Date :NA
(62) Divisional to Application Number :NA
Filing Date :NA

(71)**Name of Applicant :**
1)LGT ADVANCED TECHNOLOGY LIMITED
Address of Applicant :Woodside, Mill Road, Cromer, Norfolk NR27 0BG U.K.
(72)**Name of Inventor :**
1)BLAKE, Timothy
2)RYTON, George, Harold
3)MANSIR, Hassan
4)HEMINGWAY, Nicholas, James

(57) Abstract :
A wind energy system comprising a wind turbine comprising a cowling surrounded by a diffuser and a plurality of inner rotor blades located inside of the cowling that rotate about an inner hub, a plurality of outer rotor blades positioned between the diffuser and the cowling that are counter-rotating relative to the plurality of inner rotor blades, a drive mechanism located within the inner rotor hub, a dynamic telescopic tower, and a tower support that connects the wind turbine to the dynamic telescopic tower.

No. of Pages : 67 No. of Claims : 33

(12) PATENT APPLICATION PUBLICATION
(19) INDIA
(22) Date of filing of Application :19/11/2014
(21) Application No.2642/KOLNP/2014 A
(43) Publication Date : 08/05/2015

(54) Title of the invention : PLASTIC-FILM-HEAT-SEALING DEVICE

(51) International classification :B29C65/20
(31) Priority Document No :2012-117404
(32) Priority Date :23/05/2012
(33) Name of priority country :Japan
(86) International Application No :PCT/JP2013/054940
Filing Date :26/02/2013
(87) International Publication No :WO 2013/175822
(61) Patent of Addition to Application Number :NA
Filing Date :NA
(62) Divisional to Application Number :NA
Filing Date :NA

(71)**Name of Applicant :**
1)TOTANI CORPORATION
Address of Applicant :4-44, Nakakuze-cho, Kuze, Minami-ku, Kyoto-shi, Kyoto 6018213 Japan
(72)**Name of Inventor :**
1)OHNISHI, Hideo
2)FUJITA, Takashi

(57) Abstract :
A plastic-film-heat-sealing device for aligning the edge sections (3) on both sides of a plastic film (1) with one another, and heat-sealing in the lengthwise direction thereof, wherein the edge sections (3) on both sides are definitively heat-sealed, and a worsening of the outward appearance thereof is prevented without reducing the sealing strength thereof. A pair of heaters (5) are positioned in a manner such that one heater is on one side and one heater is on the other side of the two edge sections (3). The heaters (5) each have a heating surface (6). The heating surfaces (6) face one another with an interval interposed therebetween, and preheat the two edge sections (3). In addition, a plurality of air-suction holes (7) are formed in each heating surface (6), the two edge sections (3) are each drawn to and held by the suction holes (7), and the two edge sections (3) each contact one of the heating surfaces (6).

No. of Pages : 15 No. of Claims : 3

(12) PATENT APPLICATION PUBLICATION
(19) INDIA
(22) Date of filing of Application :19/11/2014
(21) Application No.2643/KOLNP/2014 A
(43) Publication Date : 08/05/2015

(54) Title of the invention : HETEROCYCLE-FUSED MORPHINANS, USE THEREOF AND PREPARATION THEREOF

(51) International classification :C07D489/08
(31) Priority Document No :61/641,355
(32) Priority Date :02/05/2012
(33) Name of priority country :U.S.A.
(86) International Application No :PCT/US2013/039242
Filing Date :02/05/2013
(87) International Publication No :WO 2013/166271
(61) Patent of Addition to Application Number :NA
Filing Date :NA
(62) Divisional to Application Number :NA
Filing Date :NA

(71)**Name of Applicant :**
1)SOUTHERN RESEARCH INSTITUTE
Address of Applicant :Office of Commercialization and Intellectual Property, 2000 9th Avenue South, P.O. Box 55305, Birmingham, AL 35205-5305 U.S.A.
(72)**Name of Inventor :**
1)ANANTHAN, Subramaniam

(57) Abstract :
The present disclosure is concerned with a process for the preparation of the above disclosed compounds, pharmaceutically acceptable salts thereof, deuterated forms thereof, isomers thereof, solvates thereof, or mixtures thereof which comprises subjecting a 17-substituted-3, 14-dihydroxypyridomorphinan to dialkylation at the phenolic hydroxyl at the 3-position and the tertiary alcohol at the 14-position followed by selective dealkylation of the phenolic ether function.

No. of Pages : 63 No. of Claims : 8

(12) PATENT APPLICATION PUBLICATION
(19) INDIA
(22) Date of filing of Application :19/11/2014
(21) Application No.2644/KOLNP/2014 A
(43) Publication Date : 08/05/2015

(54) Title of the invention : CUTTING TOOL MADE FROM CUBIC BORON NITRIDE-BASED SINTERED MATERIAL

(51) International classification :B23B27/14,C04B35/583,C04B35/626
(31) Priority Document No :2012-112492
(32) Priority Date :16/05/2012
(33) Name of priority country :Japan
(86) International Application No :PCT/JP2013/058778
Filing Date :26/03/2013
(87) International Publication No :WO 2013/172095
(61) Patent of Addition to Application Number :NA
Filing Date :NA
(62) Divisional to Application Number :NA
Filing Date :NA

(71)**Name of Applicant :**
1)MITSUBISHI MATERIALS CORPORATION
Address of Applicant :3-2, Otemachi 1-chome, Chiyoda-ku, Tokyo 1008117 Japan
(72)**Name of Inventor :**
1)MIYASHITA Yosuke
2)YANO Masahiro
3)OHASHI Tadakazu

(57) Abstract :
The purpose of the present invention is to provide a cBN tool which can exhibit excellent chipping resistance and excellent wear resistance even when used for the intermittent cutting of a high-hardness steel and can also exhibit excellent cutting performance throughout long-term use. The purpose can be achieved by providing a cutting tool made from a cBN sintered material, in which a cBN sintered material that contains at least cBN particles as a hard phase component is employed as a tool base, wherein each of the cBN particles has an Al2O3 layer that has, on the surface thereof, slits formed at an average formation ratio of 0.02 to 0.20 inclusive and has an average layer thickness of 1.0 to 10 nm, the cBN sintered material has, around the periphery of each of the cBN particles, a binder phase comprising TiN alone or a combination of TiN and TiC, TiB2, TiCN, AlN, Al2O3, WC or the like, and the sum total of the content of Al2O3 formed on the surface of each of the cBN particles and the content of Al2O3 present in the binder phase is 2 to 40 vol% on average wherein the volume of a region of each of the cBN particles which lies between the surface of each of the cBN particles and a zone located at the depth of 50 nm from the above-mentioned surface is defined as 100 vol%.

No. of Pages : 37 No. of Claims : 11

(12) PATENT APPLICATION PUBLICATION
(19) INDIA
(22) Date of filing of Application :31/10/2014
(21) Application No.2445/KOLNP/2014 A
(43) Publication Date : 08/05/2015

(54) Title of the invention : PARTICLES AND METHOD FOR PRODUCING PARTICLES

(51) International classification :B01J2/04,B29B9/10,B05B7/26
(31) Priority Document No :2012-105030
(32) Priority Date :02/05/2012
(33) Name of priority country :Japan
(86) International Application No :PCT/JP2013/062983
Filing Date :30/04/2013
(87) International Publication No :WO 2013/165020
(61) Patent of Addition to Application Number :NA
Filing Date :NA
(62) Divisional to Application Number :NA
Filing Date :NA

(71)**Name of Applicant :**
1)RICOH COMPANY, LTD.
Address of Applicant :3-6, Nakamagome 1-chome, Ohta-ku, Tokyo, 1438555 Japan
(72)**Name of Inventor :**
1)OSAKA, Keiko
2)TANAKA, Chiaki

(57) Abstract :
A method for producing particles, which contains: bringing a compressive fluid and a pressure plastic material into contact with each other to melt the pressure plastic material; and jetting a melt obtained by melting the pressure plastic material to form particles, wherein the jetting the melt is performed by a two-fluid nozzle or three-fluid nozzle.

No. of Pages : 96 No. of Claims : 10

(12) PATENT APPLICATION PUBLICATION
(19) INDIA
(22) Date of filing of Application :31/10/2014
(21) Application No.2446/KOLNP/2014 A
(43) Publication Date : 08/05/2015

(54) Title of the invention : METHODS AND SYSTEMS FOR POWER OPTIMIZATION IN A MEDICAL DEVICE

(51) International classification :A61B5/1455
(31) Priority Document No :13/484,711
(32) Priority Date :31/05/2012
(33) Name of priority country :U.S.A.
(86) International Application No :PCT/US2013/043338
Filing Date :30/05/2013
(87) International Publication No :WO 2013/181377
(61) Patent of Addition to Application Number :NA
Filing Date :NA
(62) Divisional to Application Number :NA
Filing Date :NA

(71)**Name of Applicant :**
1)COVIDIEN LP
Address of Applicant :15 Hampshire Street, Mansfield, Massachusetts 02048 U.S.A.
(72)**Name of Inventor :**
1)LISOGURSKI, Daniel
2)BAKER, Jr., Clark

(57) Abstract :
A physiological monitoring system may use photonic signals to determine physiological parameters. The system may vary parameters of a light drive signal used to generate the photonic signal from a light source such that power consumption is reduced or optimized. Parameters may include light intensity, firing rate, duty cycle, other suitable parameters, or any combination thereof. In some embodiments, the system may use information from a first light source to generate a light drive signal for a second light source. In some embodiments, the system may vary parameters in a way substantially synchronous with physiological pulses, for example, cardiac pulses. In some embodiments, the system may vary parameters in response to an external trigger.

No. of Pages : 99 No. of Claims : 26

(12) PATENT APPLICATION PUBLICATION
(19) INDIA
(22) Date of filing of Application :11/11/2014
(21) Application No.2550/KOLNP/2014 A
(43) Publication Date : 08/05/2015

(54) Title of the invention : POWDER CONTAINER AND IMAGE FORMING APPARATUS

(51) International classification :G03G15/08
(31) Priority Document No :2012-126637
(32) Priority Date :03/06/2012
(33) Name of priority country :Japan
(86) International Application No :PCT/JP2013/065901
Filing Date :03/06/2013
(87) International Publication No :WO 2013/183782
(61) Patent of Addition to Application Number :NA
Filing Date :NA
(62) Divisional to Application Number :NA
Filing Date :NA

(71)**Name of Applicant :**
1)RICOH COMPANY, LIMITED
Address of Applicant :3-6, Nakamagome 1-chome, Ohta-ku, Tokyo, 1438555 Japan
(72)**Name of Inventor :**
1)HOSOKAWA, Hiroshi
2)KAI, Tsukuru
3)MATSUMOTO, Junichi
4)KOMATSU, Makoto
5)HAYAKAWA, Tadashi
6)OZAWA, Yuzuru
7)TAMAKI, Shinji
8)KIKUCHI, Kenji

(57) Abstract :
The powder container includes a container body containing a powder for image formation, the powder being to be supplied to a powder replenishing device; a conveyor configured to convey the powder from one end in a longitudinal direction to the other end at which a cylindrical container opening is formed, the conveyor being provided inside the container body; a gear configured to rotate the conveyor with an external driving force; a container cover configured to cover the gear, the container cover having a gear exposing hole for partially exposing a gear tooth; and a nozzle receiver configured to guide the conveying nozzle inside of the container body, the nozzle receiver being provided on the container opening. The container cover includes a container engaged portion provided outer than the tooth of the gear in a radial direction.

No. of Pages : 212 No. of Claims : 61

(12) PATENT APPLICATION PUBLICATION
(19) INDIA
(22) Date of filing of Application :20/11/2014
(21) Application No.2650/KOLNP/2014 A
(43) Publication Date : 08/05/2015

(54) Title of the invention : APPARATUS AND METHOD FOR ENHANCING ENGINE PERFORMANCE AND CLEANING THE SAME

(51) International classification :F02B77/04,F02M25/12
(31) Priority Document No :PI 2012003540
(32) Priority Date :06/08/2012
(33) Name of priority country :Malaysia
(86) International Application No :PCT/MY2013/000144
Filing Date :06/08/2013
(87) International Publication No :WO/2014/025249
(61) Patent of Addition to Application Number :NA
Filing Date :NA
(62) Divisional to Application Number :NA
Filing Date :NA

(71)**Name of Applicant :**
1)BIOFUEL HYDROLYZER(M)SDN.BHD.
Address of Applicant :NO. 244, JALAN S2 E9, GARDEN HOMES SHOP OFFICE 70300, SEREMBAN, NEGERI SEMBILAN, Malaysia
(72)**Name of Inventor :**
1)TP. BALAKRISHNAN, B. ASHOK A/L

(57) Abstract :
An apparatus (10) and method for supplementing internal combustion engines with Hydrogen and Oxygen gases produced by an electrolysis process. The gases are supplied to a combustion chamber of the engine for enhancing combustion process of the engine, cleaning the engine system and lowering emissions of the engine. The apparatus (10) comprises a plurality of electrodes (108) that are arranged adjacent to each other to generate uniform electromagnetic fields around the electrodes (108) when a minimal electrical current is supplied to the apparatus (10).

No. of Pages : 23 No. of Claims : 23

(12) PATENT APPLICATION PUBLICATION
(19) INDIA
(22) Date of filing of Application :20/11/2014
(21) Application No.2653/KOLNP/2014 A
(43) Publication Date : 08/05/2015

(54) Title of the invention : BEAD APEX RUBBER-FORMING METHOD, AND BEAD APEX RUBBER-FORMING DEVICE

(51) International classification :B29D30/48,B29C47/12,B29C47/36
(31) Priority Document No :2012-112679
(32) Priority Date :16/05/2012
(33) Name of priority country :Japan
(86) International Application No :PCT/JP2013/060616
Filing Date :08/04/2013
(87) International Publication No :WO 2013/172127
(61) Patent of Addition to Application Number :NA
Filing Date :NA
(62) Divisional to Application Number :NA
Filing Date :NA

(71)**Name of Applicant :**
1)SUMITOMO RUBBER INDUSTRIES, LTD.
Address of Applicant :6-9, Wakinohama-cho 3-chome, Chuo-ku, Kobe-shi, Hyogo 6510072 Japan
2)NAKATA ENGINEERING CO., LTD.
(72)**Name of Inventor :**
1)ONIMATSU Hiroyuki
2)NAKAO Naoyasu
3)TAKAHASHI Hiroyuki

(57) Abstract :
The present invention forms bead apex rubber with good precision on the outer circumferential surface of the bead core. A molding process, in which unvulcanized rubber is made to flow into a bead apex-molding chamber that is surrounded by surfaces that include the outer circumferential surface of a circular bead core and the bead apex rubber is formed directly on the outer circumferential surface of the bead core that is rotating around the core shaft center, is provided. The molding process comprises: a leading end-forming step that forms the leading end of the bead apex rubber; a middle section-forming step that sequentially forms the bead apex rubber to be continuous with the leading end; and a joining step that joins the back end and the leading end of the bead apex rubber by the inflow of unvulcanized rubber therebetween.

No. of Pages : 38 No. of Claims : 2

(12) PATENT APPLICATION PUBLICATION
(21) Application No.2571/KOLNP/2014 A
(19) INDIA
(22) Date of filing of Application :12/11/2014
(43) Publication Date : 08/05/2015

(54) Title of the invention : SURFACE-TREATED CALCIUM CARBONATE FILLER, AND CURABLE RESIN COMPOSITION CONTAINING SAID FILLER

(51) International classification :C09C3/08,C08K9/04,C08L101/00
(31) Priority Document No :2012-106515
(32) Priority Date :08/05/2012
(33) Name of priority country :Japan
(86) International Application No :PCT/JP2013/062341
Filing Date :26/04/2013
(87) International Publication No :WO 2013/168600
(61) Patent of Addition to Application Number :NA
Filing Date :NA
(62) Divisional to Application Number :NA
Filing Date :NA

(71)**Name of Applicant :**
1)MARUO CALCIUM CO., LTD.
Address of Applicant :1455, Nishioka, Uozumi-cho, Akashi-shi, Hyogo 6740084 Japan
(72)**Name of Inventor :**
1)FUKUMOTO Katsunori
2)HAYASHI Yusuke
3)SAKAGUCHI Shigeru
4)YAGO Tatsunari

(57) Abstract :
Provided are: a surface-treated calcium carbonate filler which can exhibit an excellent thixotropic property when added to a curable resin composition, can exhibit a high elongation degree at a low modulus, and can have such a recovery rate that a load to be applied onto a contact surface can be reduced; and a curable resin composition which contains the filler. A surface-treated calcium carbonate filler which comprises a synthetic calcium carbonate that has a surface treated with a fatty acid-type organic material containing a fatty acid salt and has a floc structure, said filler being characterized in that the ratio (Sr) of the amount of a fatty acid salt for which a counter ion is of monovalent and which is contained in surface-treating agents, which are substances eluted as free materials when the surface-treated calcium carbonate is refluxed with ethanol, to the total amount of the surface-treating agents is 10 to 30 wt%, and the porosity (Po) of the surface-treated calcium carbonate upon the consolidation of the surface-treated calcium carbonate is 38 to 45 wt%; and a curable resin composition which contains the filler.

No. of Pages : 47 No. of Claims : 5

(12) PATENT APPLICATION PUBLICATION
(19) INDIA
(22) Date of filing of Application :12/11/2014
(21) Application No.2573/KOLNP/2014 A
(43) Publication Date : 08/05/2015

(54) Title of the invention : METHOD FOR DEPOSITING A COATING AND A COATED CUTTING TOOL

(51) International classification	:C23C14/02,C23C14/06,C23C14/32
(31) Priority Document No	:12169796.5
(32) Priority Date	:29/05/2012
(33) Name of priority country	:EPO
(86) International Application No	:PCT/EP2013/060902
Filing Date	:28/05/2013
(87) International Publication No	:WO 2013/178598
(61) Patent of Addition to Application Number	:NA
Filing Date	:NA
(62) Divisional to Application Number	:NA
Filing Date	:NA

(71)**Name of Applicant :**
1)SECO TOOLS AB
Address of Applicant :SE 737 82 Fagersta Sweden
(72)**Name of Inventor :**
1)ANDERSSON Jon
2)JOHANSSON Mats
3)SJÖLÉN Jacob

(57) Abstract :
The present invention relates to a method for depositing a hard and wear resistant layer onto a tool body (1) of a hard alloy of for example cemented carbide cermet ceramics cubic boron nitride based material or high speed steel. The method comprises depositing the layer by highly ionised physical vapour deposition using elemental composite and/or alloyed source material comprising the elements Me where Me is one or more of Ti V Cr Y Zr Nb Mo Hf Ta W B Al and Si using a process gas comprising one or more of the elements C N O and S and applying a first substrate bias potential Ub1 where 900 V < Ub1 < 300 V during at least one fraction Dhi i=1 2 3… of the total layer deposition time Dtot where Dhi> 0.05Dtot and applying a second substrate bias potential Ub2 where 150 V < Ub2 < 0 V during at least one fraction Dli i=1 2 3… of the total deposition time Dtot. The invention also relates to a cutting tool for metal machining by chip removal onto at least part of which a hard and wear resistant coating is deposited wherein said coating comprises at least one layer (2) deposited according to the above mentioned method.

No. of Pages : 35 No. of Claims : 20

(12) PATENT APPLICATION PUBLICATION
(21) Application No.2672/KOLNP/2014 A
(19) INDIA
(22) Date of filing of Application :21/11/2014
(43) Publication Date : 08/05/2015

(54) Title of the invention : METHODS AND COMPOSITIONS FOR TREATING AMYLOID DEPOSITS

(51) International classification :C12N15/861
(31) Priority Document No :61/648,801
(32) Priority Date :18/05/2012
(33) Name of priority country :U.S.A.
(86) International Application No :PCT/US2013/031725
Filing Date :14/03/2013
(87) International Publication No :WO 2013/172964
(61) Patent of Addition to Application Number :NA
Filing Date :NA
(62) Divisional to Application Number :NA
Filing Date :NA

(71)**Name of Applicant :**
1)UNIVERSITY OF IOWA RESEARCH FOUNDATION
Address of Applicant :Iowa Centers for Enterprise112 N. Capitol Street 6 Gilmore HallIowa City, Iowa 52242 U.S.A.
2)THE GENERAL HOSPITAL CORPORATION
(72)**Name of Inventor :**
1)DAVIDSON, Beverly, L.
2)HYMAN, Bradley, T.

(57) Abstract :
The present disclosure provides methods of delivering a protective ApoE isoform to the central nervous system of a mammal, comprising administering to the cerebrospinal fluid (CSF) of the mammal an rAAV particle comprising an AAV capsid protein and a vector comprising a nucleic acid encoding the protective ApoE isoform inserted between a pair of AAV inverted terminal repeats in a manner effective to infect ependymal cells in the non-rodent mammal such that the ependymal cells secrete the ApoE into the CSF of the mammal.

No. of Pages : 82 No. of Claims : 24

(12) PATENT APPLICATION PUBLICATION
(19) INDIA
(22) Date of filing of Application :21/11/2014
(21) Application No.2673/KOLNP/2014 A
(43) Publication Date : 08/05/2015

(54) Title of the invention : PLATFORM INDEPENDENT SYSTEM FOR CONTEXT-RELATED ADVERTISEMENT DELIVERY AND DISPLAY

(51) International classification :H04N7/173
(31) Priority Document No :61/661,769
(32) Priority Date :19/06/2012
(33) Name of priority country :U.S.A.
(86) International Application No :PCT/US2013/046438
Filing Date :18/06/2013
(87) International Publication No :WO 2013/192244
(61) Patent of Addition to Application Number :NA
Filing Date :NA
(62) Divisional to Application Number :NA
Filing Date :NA

(71)**Name of Applicant :**
1)YUME, INC.
Address of Applicant :1204 Middlefield Road, Redwood City, CA94063 U.S.A.
(72)**Name of Inventor :**
1)SANKARAN, Ayyappan
2)KADAMBI, Jayant
3)SHAVER, Matthew
4)DANDEKAR, Yogesh

(57) Abstract :
A video display apparatus including a processor, non-volatile memory coupled to the processor storing binary code segments, an Internet interface coupled to the processor, and a video display coupled to the processor capable of displaying an advertisement received via the Internet. Example binary code segments include client code segments, board support package (BSP) code segments, player support package (PSP) code segments, application support package (ASP) code segments, and application code capable of interacting with the client code segments and the ASP code segments. A multi-platform advertising system provides a web server for concurrently communicating with two or more display devices to derived demographics of a common user for the purpose of delivering a targeted video advertisement.

No. of Pages : 30 No. of Claims : 13

(12) PATENT APPLICATION PUBLICATION
(19) INDIA
(22) Date of filing of Application :13/11/2014
(21) Application No.2580/KOLNP/2014 A
(43) Publication Date : 08/05/2015

(54) Title of the invention : PLURALITY OF REACTION CHAMBERS IN A TEST CARTRIDGE

(51) International classification :B01L3/00
(31) Priority Document No :61/644,858
(32) Priority Date :09/05/2012
(33) Name of priority country :U.S.A.
(86) International Application No :PCT/EP2013/059692
Filing Date :09/05/2013
(87) International Publication No :WO 2013/167716
(61) Patent of Addition to Application Number :NA
Filing Date :NA
(62) Divisional to Application Number :NA
Filing Date :NA

(71)**Name of Applicant :**
1)STAT-DIAGNOSTICA & INNOVATION, S.L.
Address of Applicant :BaldiriReixac 4, E-08028 Barcelona Spain
(72)**Name of Inventor :**
1)GARCÍA SÁNCHEZ, José Antonio
2)CARRERA FABRA, Jordi
3)COMENGES CASAS, Anna
4)BRU GIBERT, Rafael

(57) Abstract :
A fluidic testing system is presented that includes a plurality of test chambers, a plurality of inlet channels, and a fluidic network that connects the inlet channels to one or more other chambers. The plurality of test chambers are each characterized by a length and a hydraulic diameter. The length of each test chamber is aligned substantially parallel to a gravity vector. Each of the test chambers has only one opening disposed along the length of the corresponding test chamber. Additionally, each of the test chambers is coupled via its respective opening to only one of the plurality of inlet channels.

No. of Pages : 43 No. of Claims : 75

(12) PATENT APPLICATION PUBLICATION
(19) INDIA
(22) Date of filing of Application :13/11/2014
(21) Application No.2581/KOLNP/2014 A
(43) Publication Date : 08/05/2015

(54) Title of the invention : MENINGOCOCCUS SEROGROUP X CONJUGATE

(51) International classification :A61K47/48,A61K39/095,A61P31/04
(31) Priority Document No :61/650,025
(32) Priority Date :22/05/2012
(33) Name of priority country :U.S.A.
(86) International Application No :PCT/EP2013/060447
Filing Date :22/05/2013
(87) International Publication No :WO 2013/174832
(61) Patent of Addition to Application Number :NA
Filing Date :NA
(62) Divisional to Application Number :NA
Filing Date :NA

(71)**Name of Applicant :**
1)NOVARTIS AG
Address of Applicant :Lichtstrasse 35, CH-4056 Basel Switzerland
(72)**Name of Inventor :**
1)ROMANO, Maria Rosaria
2)MICOLI, Francesca
3)BERTI, Francesco
4)ADAMO, Roberto
5)COSTANTINO, Paolo

(57) Abstract :
The invention provides a conjugate of a Neisseria meningitidisserogroup X capsular polysaccharide and a carrier molecule. The conjugate is typically made by (a) oxidising a primary hydroxyl group in the capsular polysaccharide, to give an oxidised polysaccharide with an aldehyde group; and (b) coupling the oxidised polysaccharide to a carrier molecule via the aldehyde group, thereby giving the conjugate. The conjugate may be part of an immunogenic composition. This composition may comprise one or more further antigens, particularly capsular polysaccharides from serogroups A, W135, C and Y and conjugated forms thereof. The composition may be in an aqueous formulation. The composition is useful as a vaccine, e.g. for raising an immune response in a mammal. The invention also provides processes for making the conjugate.

No. of Pages : 93 No. of Claims : 25

(12) PATENT APPLICATION PUBLICATION
(19) INDIA
(22) Date of filing of Application :13/11/2014
(21) Application No. 2582/KOLNP/2014 A
(43) Publication Date : 08/05/2015

(54) Title of the invention : CATALYST FOR THE SELECTIVE OXIDATION OF SULPHUR COMPOUNDS

(51) International classification	:B01J21/04,B01J23/75,B01J29/072
(31) Priority Document No	:NA
(32) Priority Date	:NA
(33) Name of priority country	:NA
(86) International Application No	:PCT/ES2012/070270
Filing Date	:23/04/2012
(87) International Publication No	:WO 2013/160490
(61) Patent of Addition to Application Number	:NA
Filing Date	:NA
(62) Divisional to Application Number	:NA
Filing Date	:NA

(71)**Name of Applicant :**
1)REPSOL S.A.
Address of Applicant :Calle Mendez Alvaro Nº 44, E-28045 Madrid Spain
(72)**Name of Inventor :**
1)MALANGO, Tomas M.
2)ZAFRA, María Dolores
3)ROLDÁ□N, Rafael

(57) Abstract :
The present invention relates to a supported catalyst for the selective oxidation of sulphur compounds from the tail gas of the Claus process, or streams having an equivalent composition, into elemental sulphur or sulphur dioxide (SO2). The present invention also relates to a method for preparing said type of catalyst, as well as to the method for the selective oxidation of sulphur compounds into elemental sulphur which implements the catalyst of the invention, and to the method for the catalytic incineration of the tail gas from the Claus process which implements the catalyst of the present invention.

No. of Pages : 21 No. of Claims : 16

(12) PATENT APPLICATION PUBLICATION
(21) Application No.2583/KOLNP/2014 A
(19) INDIA
(22) Date of filing of Application :13/11/2014
(43) Publication Date : 08/05/2015

(54) Title of the invention : HIGH PENETRATION PRODRUG COMPOSITIONS AND PHARMACEUTICAL COMPOSITION THEREOF FOR TREATMENT OF PULMONARY CONDITIONS

(51) International classification :A61K31/13,A61P11/00
(31) Priority Document No :201210151555.7
(32) Priority Date :16/05/2012
(33) Name of priority country :China
(86) International Application No :PCT/CN2013/072693
Filing Date :15/03/2013
(87) International Publication No :WO 2013/170655
(61) Patent of Addition to Application Number :NA
Filing Date :NA
(62) Divisional to Application Number :NA
Filing Date :NA

(71)**Name of Applicant :**
1)TECHFIELDS PHARMA CO., LTD.
Address of Applicant :2F, Building # 3, 2358 Changan Road, Wujiang, Jiangsu 215200 China
2)YU, Chongxi
(72)**Name of Inventor :**
1)YU, Chongxi
2)XU, LINA

(57) Abstract :
The invention provides compositions of novel high penetration compositions (HPC) or high penetration prodrugs (HPP) for treatment of pulmonary conditions (e.g. asthma). The HPCs/HPPs are capable of being converted to parent active drugs or drug metabolites after crossing the biological barrier and thus can render treatments for the conditions that the parent drugs or metabolites can. Additionally, the HPPs are capable of reaching areas that parent drugs may not be able to access or to render a sufficient concentration at the target areas and therefore render novel treatments. The HPCs/HPPs can be administered to a subject through various administration routes, e.g., locally delivered to an action site of a condition with a high concentration or systematically administered to a biological subject and enter the general circulation with a faster rate.

No. of Pages : 160 No. of Claims : 50

(12) PATENT APPLICATION PUBLICATION
(19) INDIA
(22) Date of filing of Application :24/11/2014
(21) Application No.2682/KOLNP/2014 A
(43) Publication Date : 08/05/2015

(54) Title of the invention : GALLIUM NITRIDE DEVICES HAVING LOW OHMIC CONTACT RESISTANCE

(51) International classification :H01L29/778,H01L29/08,H01L29/06
(31) Priority Document No :13/548,305
(32) Priority Date :13/07/2012
(33) Name of priority country :U.S.A.
(86) International Application No :PCT/US2013/044254
Filing Date :05/06/2013
(87) International Publication No :WO 2014/011332
(61) Patent of Addition to Application Number :NA
Filing Date :NA
(62) Divisional to Application Number :NA
Filing Date :NA

(71)**Name of Applicant :**
1)RAYTHEON COMPANY
Address of Applicant :870 Winter Street, Waltham, Massachusetts 02451-1449 U.S.A.
(72)**Name of Inventor :**
1)TABATABAIE, Kamal
2)HOKE, William, E.
3)CHUMBES, Eduardo, M.
4)MCCARTHY, Kevin

(57) Abstract :
A semiconductor structure having mesa structure comprising: a lower semiconductor layer; an upper semiconductor layer having a higher band gap than, and in direct contact with, the lower semiconductor layer to form a two-dimension electron gas (2DEG) region between the upper semiconductor layer. The 2DEG region has outer edges terminating at sidewalls of the mesa. An additional electron donor layer has a band gap higher than the band gap of the lower layer disposed on sidewall portions of the mesa structure and on the region of the 2DEG region terminating at sidewalls of the mesa. An ohmic contact material is disposed on the electron donor layer. A sideway HEMT is formed with the electron donor layer, the 2DEG region and the ohmic contact material increasing the concentration of electrons (i.e., lowering ohmic contact resistance) along the contact between the lower semiconductor layer and the electron donor layer.

No. of Pages : 17 No. of Claims : 13

(12) PATENT APPLICATION PUBLICATION
(19) INDIA
(22) Date of filing of Application :24/11/2014
(21) Application No.2683/KOLNP/2014 A
(43) Publication Date : 08/05/2015

(54) Title of the invention : METHOD FOR THE PREPARATION OF THIADIAZOLES

(51) International classification :C07D 28/508
(31) Priority Document No :61/648,928
(32) Priority Date :18/05/2012
(33) Name of priority country :U.S.A.
(86) International Application No :PCT/US2013/041504
Filing Date :17/05/2013
(87) International Publication No :WO 2013/173672
(61) Patent of Addition to Application Number :NA
Filing Date :NA
(62) Divisional to Application Number :NA
Filing Date :NA

(71)**Name of Applicant :**
1)AMGEN INC.
Address of Applicant :ONE AMGEN CENTER DRIVE, THOUSAND OAKS, CA 91320 U.S.A.
(72)**Name of Inventor :**
1)BERCOT, Eric A.
2)BIO, Matthew
3)CHAN, Johann
4)COLYER, John
5)FANG, Yuanqing
6)MENNEN, Steven
7)MILBURN, Robert R.
8)TEDROW, Jason
9)RIAHI, Babak

(57) Abstract :
The present invention relates to processes for preparing protected glyceraldehydes, such as (hydroxy)methanesulfonates. In addition, the invention relates to thiadiazoles, particularly 3-diooxolanyl-thiadiazoles.

No. of Pages : 32 No. of Claims : 32

(12) PATENT APPLICATION PUBLICATION
(21) Application No.2684/KOLNP/2014 A
(19) INDIA
(22) Date of filing of Application :24/11/2014
(43) Publication Date : 08/05/2015

(54) Title of the invention : COIL WINDING METHOD AND TRANSFORMER

(51) International classification :H01F41/06
(31) Priority Document No :2012-124012
(32) Priority Date :31/05/2012
(33) Name of priority country :Japan
(86) International Application No :PCT/JP2013/061571
Filing Date :19/04/2013
(87) International Publication No :WO 2013/179800
(61) Patent of Addition to Application Number :NA
Filing Date :NA
(62) Divisional to Application Number :NA
Filing Date :NA

(71)**Name of Applicant :**
1)SHT CORPORATION LIMITED
Address of Applicant :5-6, Rinkuoraiminami, Izumisano-shi, Osaka 5980047 Japan
(72)**Name of Inventor :**
1)YOSHIMORI Hitoshi
2)NAKASHIMA Koji

(57) Abstract :
Provided is a production method for a coil in which a plurality of unit coil sections are lined up in the winding axis direction, each of the unit coil sections is formed from a plurality of unit winding sections having differing inner peripheral lengths, and unit winding sections having a small inner peripheral length penetrate the inside of unit winding sections having a large inner peripheral length. In the coil winding method according to the present invention, the following steps are repeated in an alternating manner: a step in which an outward-facing winding unit coil section (14) is formed that comprises a plurality of unit winding sections that are layered from the inner peripheral side toward the outer peripheral side; and a step in which an inward-facing winding unit coil section (15) is formed that comprises a plurality of unit winding sections that are layered from the outer peripheral side toward the inner peripheral side. At the formation step for the outward-facing winding unit coil section (14), a step is repeated in which an outer peripheral-side unit winding section is formed by stacking on the outer peripheral surface of the inner peripheral-side unit winding section. At the formation step for the inward-facing winding unit coil section (15), a step is repeated in which a unit winding section is formed at a position that is separated from the outward-facing winding unit coil section (14) and the unit winding section is pushed until said unit winding section comes into contact with the side surface of the outward-facing winding unit coil section (14).

No. of Pages : 55 No. of Claims : 17

(12) PATENT APPLICATION PUBLICATION
(19) INDIA
(22) Date of filing of Application :24/11/2014
(21) Application No.2685/KOLNP/2014 A
(43) Publication Date : 08/05/2015

(54) Title of the invention : SYSTEM AND METHOD FOR PRODUCING PARAMETRIC MAPS OF OPTOACOUSTIC DATA

(51) International classification :A61B8/00
(31) Priority Document No :13/507,222
(32) Priority Date :13/06/2012
(33) Name of priority country :U.S.A.
(86) International Application No :PCT/US2013/045736
Filing Date :13/06/2013
(87) International Publication No :WO 2013/188707
(61) Patent of Addition to Application Number :NA
Filing Date :NA
(62) Divisional to Application Number :NA
Filing Date :NA

(71)**Name of Applicant :**
1)SENO MEDICAL INSTRUMENTS, INC.
Address of Applicant :5253 Prue Road, Suite 315, San Antonio, Texas78240 U.S.A.
(72)**Name of Inventor :**
1)ZALEV, Jason
2)CLINGMAN, Bryan

(57) Abstract :
A method is disclosed for creating and outputting a masked parametric map (e.g., hemoglobin oxygenation) that reflects parameters in a first parametric map (e.g., relative oxygenation) and second parametric map (e.g., relative hemoglobin). In an illustrative embodiment, the method comprises a steps of generating a first parametric map, generating a second parametric map, and then generating a masked parametric map that reflects parameters in the first and second parametric maps. The masked map may present information not readily apparent from the first parametric map and the second parametric map, and not obtainable from the first and second parametric maps independently. The first parametric map may be based upon portions of two optoacoustic images created using differing wavelengths of light. The first parametric map is reflective of areas within the volume of tissue that have a differing response to the longer wavelength light event compared to the shorter one. The second parametric map is reflective of areas within the volume of tissue that have a stronger response to the longer and shorter wavelength light events than the surrounding areas. A masked parametric map is output which is reflective of a combination of information in the first and second parametric maps. In an embodiment, the masked parametric map is generated by generating a mask reflective of a combination of information in the first and second parametric maps, and applying the mask to one of the first or second parametric maps to form the masked parametric map. In an embodiment, one or more of the parametric maps is coregisteredwith, and overlayed on an ultrasound image of the same volume of tissue before being output.

No. of Pages : 192 No. of Claims : 16

(12) PATENT APPLICATION PUBLICATION
(19) INDIA
(22) Date of filing of Application :14/11/2014
(21) Application No.2602/KOLNP/2014 A
(43) Publication Date : 08/05/2015

(54) Title of the invention : VENTILATION UNIT

(51) International classification :F04D29/42
(31) Priority Document No :BO2012A000298
(32) Priority Date :31/05/2012
(33) Name of priority country :Italy
(86) International Application No :PCT/IB2013/054473
Filing Date :30/05/2013
(87) International Publication No :WO 2013/179256
(61) Patent of Addition to Application Number :NA
Filing Date :NA
(62) Divisional to Application Number :NA
Filing Date :NA

(71)**Name of Applicant :**
1)SPAL AUTOMOTIVE S.R.L.
Address of Applicant :Via per Carpi, 26/B, I-42015 Correggio Italy
(72)**Name of Inventor :**
1)DE FILIPPIS, Pietro

(57) Abstract :
A ventilation unit (1) for generating an air flow (F) comprises a centrifugal rotor (2) able to rotate about an axis (R) of rotation, a diffuser (4) comprising a first and a second outlet (6, 7), the outlets being positioned on opposite sides of the centrifugal rotor (2) and delimiting a blowing duct (5); the centrifugal rotor (2) is inserted in the blowing duct (5) and is aligned with the first outlet (6) and with the second outlet (7) according to a main axis (X) which is perpendicular to the axis (R) of rotation.

No. of Pages : 16 No. of Claims : 8

(12) PATENT APPLICATION PUBLICATION
(21) Application No.2707/KOLNP/2014 A
(19) INDIA
(22) Date of filing of Application :25/11/2014
(43) Publication Date : 08/05/2015

(54) Title of the invention : IMAGING UNIT, ATTACHED MATTER DETECTOR, CONTROL SYSTEM FOR VEHICLE, AND VEHICLE

(51) International classification :G01N21/17,B60R11/02
(31) Priority Document No :2012-157174
(32) Priority Date :13/07/2012
(33) Name of priority country :Japan
(86) International Application No :PCT/JP2013/069078
Filing Date :08/07/2013
(87) International Publication No :WO 2014/010713
(61) Patent of Addition to Application Number :NA
Filing Date :NA
(62) Divisional to Application Number :NA
Filing Date :NA

(71)**Name of Applicant :**
1)RICOH COMPANY, LTD.
Address of Applicant :3-6, Nakamagome 1-chome, Ohta-ku, Tokyo, 1438555 Japan
(72)**Name of Inventor :**
1)HIRAI, Hideaki
2)ITOH, Izumi

(57) Abstract :
An imaging unit includes a light source placed on one surface of a light transmissive plate-like element to project a light to the one surface of the plate-like element, an imaging element to capture an image of an attached matter on the other surface of the plate-like element illuminated with the light from the light source, and an optical element having an incidence surface on which the light is incident from the light source, a reflective surface by which the light incident from the incidence surface is reflected, a transmissive surface contacting the one surface of the plate-like element, through which the light reflected by the reflective surface transmits, and an exit surface from which the light transmitting through the transmissive surface and reflected by the other surface of the plate-like element is emitted towards the imaging element.

No. of Pages : 74 No. of Claims : 16

(12) PATENT APPLICATION PUBLICATION
(19) INDIA
(22) Date of filing of Application :25/11/2014
(21) Application No.2708/KOLNP/2014 A
(43) Publication Date : 08/05/2015

(54) Title of the invention : ANODE ELECTRO-CATALYSTS FOR ALKALINE MEMBRANE FUEL CELLS

(51) International classification :H01M4/90,H01M4/86,H01M8/02
(31) Priority Document No :61/643,509
(32) Priority Date :07/05/2012
(33) Name of priority country :U.S.A.
(86) International Application No :PCT/US2013/039853
Filing Date :07/05/2013
(87) International Publication No :WO 2013/184269
(61) Patent of Addition to Application Number :NA
Filing Date :NA
(62) Divisional to Application Number :NA
Filing Date :NA

(71)**Name of Applicant :**
1)CELLERA, INC.
Address of Applicant :Industrial Park North, Hatochen 2, 38900 Caesarea Israel
(72)**Name of Inventor :**
1)DEKEL, Dario
2)GOTTESFELD, Shimshon

(57) Abstract :
An anode catalyst for an alkaline membrane fuel cell (AMFC) includes a catalytically active component and a catalytically inactive component, wherein the catalytically active component is selected from one or more of the group of ruthenium (Ru), rhodium (Rh), silver (Ag), osmium (Os), iridium (Ir), platinum (Pt), silver (Ag) and gold (Au)) and wherein the catalytically inactive component is selected from the group of iron (Fe), lead (Pb), nickel (Ni), cobalt (Co) and zinc (Zn).

No. of Pages : 15 No. of Claims : 10

(12) PATENT APPLICATION PUBLICATION
(21) Application No.2709/KOLNP/2014 A
(19) INDIA
(22) Date of filing of Application :25/11/2014
(43) Publication Date : 08/05/2015

(54) Title of the invention : METHOD FOR PREPARATION OF COMPRESSED AIR IN MOTOR VEHICLES AND DEVICE FOR CARRYING OUT SAID METHOD

(51) International classification :B60T17/00,F04B49/03
(31) Priority Document No :10 2012 021 597.5
(32) Priority Date :02/11/2012
(33) Name of priority country :Germany
(86) International Application No :PCT/EP2013/002836
Filing Date :19/09/2013
(87) International Publication No :WO 2014/067599
(61) Patent of Addition to Application Number :NA
Filing Date :NA
(62) Divisional to Application Number :NA
Filing Date :NA

(71)**Name of Applicant :**
1)WABCO GMBH
Address of Applicant :Am LindenerHafen 21, 30453 Hannover Germany
(72)**Name of Inventor :**
1)BRINKMANN, Stefan
2)FEYERABEND, Konrad

(57) Abstract :
The invention relates to a method and device for preparation of compressed air in motor vehicles, wherein ambient air is drawn in and compressed by a compressor (2) driven by the drive motor of the motor vehicle, is dried in an air dryer (4, 4) disposed downstream and is conveyed to compressed air consumers (storage tanks 14, 16), wherein furthermore the air dryer (4, 4) is regenerated by means of system air which is stored in a regeneration reservoir (30, 30), guided via the air dryer (4, 4) and vented via an associated venting valve (22), and wherein at predetermined operating states an electrically controlled governor (36, 36) switches between a conveying phase and a regeneration phase. The conveying phase of the compressor preferably takes place, at least in the event of high compressed air consumption, in driving mode at a high speed of the drive motor, and the regeneration phase takes place at least, but preferably, in stationary mode at idling speed of the drive motor, in order to keep the conveying phases short and to have sufficient time available for the regeneration. The governor (36, 36) comprises two control valves (40, 44) electrically controlled by an electrical control device (46, 46) in order to be able to control the compressor (2) and the air dryer (4, 4) as required and independently of the system pressure.

No. of Pages : 19 No. of Claims : 11

(12) PATENT APPLICATION PUBLICATION
(19) INDIA
(22) Date of filing of Application :17/11/2014
(21) Application No.2613/KOLNP/2014 A
(43) Publication Date : 08/05/2015

(54) Title of the invention : DEVICE AND METHOD IN RESPECT OF A ROCK DRILLING MACHINE AND ROCK DRILLING MACHINE

(51) International classification :E21B1/02,B25D17/00,F16J15/56
(31) Priority Document No :1250726-5
(32) Priority Date :28/06/2012
(33) Name of priority country :Sweden
(86) International Application No :PCT/SE2013/050621
Filing Date :30/05/2013
(87) International Publication No :WO 2014/003626
(61) Patent of Addition to Application Number :NA
Filing Date :NA
(62) Divisional to Application Number :NA
Filing Date :NA

(71)**Name of Applicant :**
1)ATLAS COPCO ROCK DRILLS AB
Address of Applicant :S-701 91 Örebro Sweden
(72)**Name of Inventor :**
1)JONSSON, Per

(57) Abstract :
A device for a hydraulic rock drilling machine (1) for the protection of a piston seal unit (6) for sealing between a percussive piston (4) and a cylinder in a housing (2) of the rock drilling machine, wherein a piston guide (5) is positioned between the piston seal unit (6) and a working space in the cylinder. Between the piston guide (5) and the piston seal unit (6) there is arranged a surrounding ring-shaped inwardly open chamber (9), which is formed for receiving a hydraulic liquid volume. A hydraulic supply flow channel (12,13) for hydraulic liquid supply is connected to said chamber (9). The invention also concerns a rock drilling machine and a method.

No. of Pages : 16 No. of Claims : 16

(12) PATENT APPLICATION PUBLICATION
(19) INDIA
(22) Date of filing of Application :17/11/2014
(21) Application No.2614/KOLNP/2014 A
(43) Publication Date : 08/05/2015

(54) Title of the invention : ROSY-LOOK COSMETIC COMPOSITION

(51) International classification :A61K8/98,A61K8/29,A61K8/06
(31) Priority Document No :NA
(32) Priority Date :NA
(33) Name of priority country :NA
(86) International Application No :PCT/CN2012/075714
Filing Date :18/05/2012
(87) International Publication No:WO 2013/170478
(61) Patent of Addition to Application Number :NA
Filing Date :NA
(62) Divisional to Application Number :NA
Filing Date :NA

(71)**Name of Applicant :**
1)L'OREAL
Address of Applicant :14 rue Royale, F-75008 Paris France
(72)**Name of Inventor :**
1)LEMOINE, Cyril
2)CASSIN, Guillaume

(57) Abstract :
Provided is a cosmetic composition. The composition comprises, in a physiologically acceptable medium, from 0.1% to 4% by weight, relative to the total weight of the composition, of at least one white pigment and from 0.1% to 4% by weight, relative to the total weight of the composition, of at least one white nacre. The said composition is free of additional dyestuffs.

No. of Pages : 22 No. of Claims : 12

(12) PATENT APPLICATION PUBLICATION
(19) INDIA
(22) Date of filing of Application :17/11/2014
(21) Application No.2615/KOLNP/2014 A
(43) Publication Date : 08/05/2015

(54) Title of the invention : SYSTEM AND METHOD FOR RESIDUAL ANALYSIS OF IMAGES

(51) International classification :G06T5/00,G06T5/50
(31) Priority Document No :13/542,181
(32) Priority Date :05/07/2012
(33) Name of priority country :U.S.A.
(86) International Application No :PCT/US2013/043037
Filing Date :29/05/2013
(87) International Publication No :WO 2014/007925
(61) Patent of Addition to Application Number :NA
Filing Date :NA
(62) Divisional to Application Number :NA
Filing Date :NA

(71)**Name of Applicant :**
1)RAYTHEON COMPANY
Address of Applicant :870 Winter Street, Waltham, Massachusetts 02451-1449 U.S.A.
(72)**Name of Inventor :**
1)FLANDERS, Bradley A.
2)ROBINSON, Ian S.

(57) Abstract :
In accordance with various aspects of the disclosure, a system, a method, and computer readable medium having instructions for processing images is disclosed. For example, the method includes receiving an input datacube from which an input image is derived. The input datacube is transformed into a residual datacube by projecting out basis vectors from each spatial pixel in the input datacube, the residual datacube being used to derive a residual image. A statistical parameter value for samples of each focal plane pixel in the residual image is determined. Anomalous focal plane pixels are identified based upon a comparison of the determined statistical parameter value with the respective determined statistical parameter values of remaining focal plane pixels. Another comparison of residual values for each scanned sample of the identified anomalous focal plane pixels with values of corresponding scanned samples in the input datacube is performed.

No. of Pages : 41 No. of Claims : 20

(12) PATENT APPLICATION PUBLICATION
(19) INDIA
(22) Date of filing of Application :25/11/2014
(21) Application No.2710/KOLNP/2014 A
(43) Publication Date : 08/05/2015

(54) Title of the invention : FOLDABLE AND RESTRAINABLE CABLES

(51) International classification :H01B7/04,H01B7/06
(31) Priority Document No :61/653,221
(32) Priority Date :30/05/2012
(33) Name of priority country :U.S.A.
(86) International Application No :PCT/US2013/035742
Filing Date :09/04/2013
(87) International Publication No :WO 2013/180836
(61) Patent of Addition to Application Number :NA
Filing Date :NA
(62) Divisional to Application Number :NA
Filing Date :NA

(71)**Name of Applicant :**
1)WANG, James, C.
Address of Applicant :2962 Hammerwood Drive, Las Vegas, NV89135 U.S.A.
(72)**Name of Inventor :**
1)WANG, James, C.

(57) Abstract :
A fofdable and restrainable cable for electrical and electronic devices. The cables are preformed with bends to allow the cable to be gathered together easier for bundling. The cable also has a restratner section at one end to hold the cable together after it is gathered and bundled for storage.

No. of Pages : 47 No. of Claims : 50

(12) PATENT APPLICATION PUBLICATION
(19) INDIA
(22) Date of filing of Application :25/11/2014
(21) Application No.2711/KOLNP/2014 A
(43) Publication Date : 08/05/2015

(54) Title of the invention : SINGLE-ITEM-ACCESS DRAWER

(51) International classification :G07F11/18,A61G12/00,A61J7/00
(31) Priority Document No :13/482,935
(32) Priority Date :29/05/2012
(33) Name of priority country :U.S.A.
(86) International Application No :PCT/US2013/042524
Filing Date :23/05/2013
(87) International Publication No :WO 2013/181072
(61) Patent of Addition to Application Number :NA
Filing Date :NA
(62) Divisional to Application Number :NA
Filing Date :NA

(71)**Name of Applicant :**
1)CAREFUSION 303, INC.
Address of Applicant :3750 Torrey View Court, San Diego, CA92130 U.S.A.
(72)**Name of Inventor :**
1)RAHILLY, Michael

(57) Abstract :
A single-item-access (SIA) sub-drawer is disclosed that has a body with a compartment and a lid that is selectably securable in a closed position that encloses the compartment. The SLA sub-drawer includes a lid latch configured to secure and selectably release the lid and a sub-drawer latch configured to engage and selectably release a retention hook to secure the SIA sub-drawer to a dispensing cabinet. The SIA sub-drawer also includes a processor configured to cause the lid latch to release the lid upon receipt of a lid release signal and to cause the sub-drawer latch to release the retention hook upon receipt of a sub-drawer release signal.

No. of Pages : 26 No. of Claims : 19

(12) PATENT APPLICATION PUBLICATION
(21) Application No.1239/KOL/2013 A
(19) INDIA
(22) Date of filing of Application :30/10/2013
(43) Publication Date : 08/05/2015

(54) Title of the invention : FORMULATION OF POTASSIUM IODATE TABLET AND LIQUID DOSAGE FORM.

(51) International classification :C01B11/00
(31) Priority Document No :NA
(32) Priority Date :NA
(33) Name of priority country :NA
(86) International Application No :NA
Filing Date :NA
(87) International Publication No : NA
(61) Patent of Addition to Application Number :NA
Filing Date :NA
(62) Divisional to Application Number :NA
Filing Date :NA

(71)**Name of Applicant :**
1)Dr. SUNIL KUMAR KAUSHAL
Address of Applicant :DUSHAP PHARMACEUTICAL, KOLKATA West Bengal India
2)Dr. ROOP NARAYAN GUPTA
3)Dr. RAKESH KUMAR SHARMA
(72)**Name of Inventor :**
1)Dr. SUNIL KUMAR KAUSHAL

(57) Abstract :
The present invention describes the potassium iodate table formulation comprising (a) potassium iodate; (b) binders; (c) disintegrants; (d) preservative; (e)lubricants; and (f) pharmaceutical acceptable water which has a shelf of about 24 months.The present invention further describes the potassium iodate syrup formulation comprising
(a) potassium iodate; (b) sugar; (c) polyol; (d) glycerin; (e) preservative; (f) pharmaceutically acceptable coloring agents; (g) pharmaceutical acceptable flavoring agents; and (hPharmaceutical acceptable water which has a shelf life of about 18 months.

No. of Pages : 10 No. of Claims : 6

(12) PATENT APPLICATION PUBLICATION
(19) INDIA
(22) Date of filing of Application :17/11/2014
(21) Application No.2620/KOLNP/2014 A
(43) Publication Date : 08/05/2015

(54) Title of the invention : BONE HARVESTING

(51) International classification :A61B17/16,A61B17/22,A61B17/32
(31) Priority Document No :61/640,313
(32) Priority Date :30/04/2012
(33) Name of priority country :U.S.A.
(86) International Application No :PCT/US2013/032531
Filing Date :15/03/2013
(87) International Publication No :WO 2013/165616
(61) Patent of Addition to Application Number :NA
Filing Date :NA
(62) Divisional to Application Number :NA
Filing Date :NA

(71)**Name of Applicant :**
1)THE JOHNSHOPKINSUNIVERSITY
Address of Applicant :3400 North Charles Street, Baltimore, MD 21218 U.S.A.
(72)**Name of Inventor :**
1)BUDYANSKY, Maxim
2)SHAH, Neil
3)KHANNA, Akhil, Jay
4)KEBAISH, Khaled, M.
5)RILEY III, Lee, H.

(57) Abstract :
Methods and devices for harvesting cancellous bone are disclosed.

No. of Pages : 55 No. of Claims : 17

(12) PATENT APPLICATION PUBLICATION
(21) Application No.2720/KOLNP/2014 A
(19) INDIA
(22) Date of filing of Application :26/11/2014
(43) Publication Date : 08/05/2015

(54) Title of the invention : EFFICIENT SYSTEMS AND METHODS FOR CONSTRUCTION AND OPERATION OF MOBILE WIND POWER PLATFORMS

(51) International classification :F03D9/00
(31) Priority Document No :61/656,816
(32) Priority Date :07/06/2012
(33) Name of priority country :U.S.A.
(86) International Application No :PCT/US2013/044752
Filing Date :07/06/2013
(87) International Publication No :WO 2013/185057
(61) Patent of Addition to Application Number :NA
Filing Date :NA
(62) Divisional to Application Number :NA
Filing Date :NA

(71)**Name of Applicant :**
1)V SQUARED WIND, INC.
Address of Applicant :306 Bellevue Street, West Roxbury, MA 02132 U.S.A.
(72)**Name of Inventor :**
1)FREDA, Robert, M

(57) Abstract :
In embodiments of the present invention improved capabilities are described for a mobile wind power support structure, comprising a superstructure with mobile platform support structures, and a plurality of deployable rotating wind power structures, wherein the plurality of deployable rotating wind power structures are positioned in the superstructure through a wind orientation facility.

No. of Pages : 190 No. of Claims : 19

(12) PATENT APPLICATION PUBLICATION
(19) INDIA
(22) Date of filing of Application :26/11/2014
(21) Application No.2721/KOLNP/2014 A
(43) Publication Date : 08/05/2015

(54) Title of the invention : UNITARY PACKAGING FOR ONE CONTAINER FILLED WITH A LIQUID PHARMACEUTICAL PRODUCT

(51) International classification	:B65D75/22,B65D75/58,B65D77/04
(31) Priority Document No	:NA
(32) Priority Date	:NA
(33) Name of priority country	:NA
(86) International Application No	:PCT/IB2012/001171
Filing Date	:21/05/2012
(87) International Publication No	:WO 2013/175254
(61) Patent of Addition to Application Number	:NA
Filing Date	:NA
(62) Divisional to Application Number	:NA
Filing Date	:NA

(71)**Name of Applicant :**
1)SANOFI
Address of Applicant :54, rue La Boétie, F-75008 Paris France
(72)**Name of Inventor :**
1)ARANDA LOPEZ, Andrés, Marcelo

(57) Abstract :
The invention provides a packaging for a container (2) filled with a liquid pharmaceutical product and comprising a head (4) and a body (3) both made from a single piece and a neck portion (5) configured to form a frangible junction (6) between said head (4) and said body (3), said packaging (11) being made from plastic material and comprising two layers (12, 13) between which is defined a cavity (18) configured to receive said container (2); wherein said packaging (11) is a unitary packaging which is configured to receive one container (2) and comprises a foldable portion (24) configured so that an upper portion (32) of said packaging (11) which is configured to receive said head (4) of said container (2) folds when said head (4) is submitted to a determined load, an access portion (27) provided at least around a part of said upper portion (32) and being remote to said foldable portion (24) and a protective portion (28) configured between said access portion (27) and said foldable portion (24); so that when said head (4) of said container (2) is broken due to said determined load, said foldable portion (24) is configured to be folded, said access portion (27) is configured to give free access to said liquid pharmaceutical product in said body (3) and said protective portion (28) is configured to protect the access to the broken neck portion (5) of said container.

No. of Pages : 18 No. of Claims : 14

(12) PATENT APPLICATION PUBLICATION
(21) Application No.2722/KOLNP/2014 A
(19) INDIA
(22) Date of filing of Application :26/11/2014
(43) Publication Date : 08/05/2015

(54) Title of the invention : SYNTHETIC AND PURIFICATION METHODS FOR PHOSPHAPLATIN COMPOUNDS AND USES THEREOF

(51) International classification :C07F9/09
(31) Priority Document No :61/651,200
(32) Priority Date :24/05/2012
(33) Name of priority country :U.S.A.
(86) International Application No :PCT/US2013/031885
Filing Date :15/03/2013
(87) International Publication No :WO 2013/176764
(61) Patent of Addition to Application Number :NA
Filing Date :NA
(62) Divisional to Application Number :NA
Filing Date :NA

(71)**Name of Applicant :**
1)PHOSPLATIN THERAPEUTICS LLC
Address of Applicant :1350 Avenue Of The Americas, New York, NY10019 U.S.A.
(72)**Name of Inventor :**
1)LUKE, Wayne, D.
2)JOST, Steffen

(57) Abstract :
This application discloses novel methods and processes for preparation and purification of phosphaplatin compounds. The improvements of the synthetic methods and purification processes include, but are not limited to, efficient and reproducible large-scale preparation of these useful pharmaceutical agents in high quality and good yield.

No. of Pages : 45 No. of Claims : 46

(12) PATENT APPLICATION PUBLICATION
(19) INDIA
(22) Date of filing of Application :26/11/2014
(21) Application No.2723/KOLNP/2014 A
(43) Publication Date : 08/05/2015

(54) Title of the invention : NOVEL RESORCINOL DERIVATIVES AND THEIR COSMETIC APPLICATIONS

(51) International classification	:C07D207/08,A61K8/49,A61Q19/02
(31) Priority Document No	:1255717
(32) Priority Date	:19/06/2012
(33) Name of priority country	:France
(86) International Application No	:PCT/IB2013/055028
Filing Date	:19/06/2013
(87) International Publication No	:WO 2013/190483
(61) Patent of Addition to Application Number	:NA
Filing Date	:NA
(62) Divisional to Application Number	:NA
Filing Date	:NA

(71)**Name of Applicant :**
1)L'OREAL
Address of Applicant :14 rue Royale, F-75008 Paris France
(72)**Name of Inventor :**
1)MARAT, Xavier

(57) Abstract :
The present invention relates to novel compounds which are resorcinol derivatives of general formula (I): in which: R denotes a hydrogen atom or an acetyl group; A denotes an optionally interrupted and/or substituted alkyl group; an optionally substituted aryl or heteroaryl group; -NR2R3; -OR4; -C(0)NHR4; and - C(0)alkyl; R2 and R3, which are identical or different, denoting a radical chosen from: -H; an optionally interrupted and/or substituted alkyl group; and an optionally substituted aryl or heteroaryl group; it being possible for R2 and R3 to form, with the nitrogen which carries them, a saturated or unsaturated nonaromatic and optionally substituted heterocycle; R4 denoting a radical chosen from: -H; an optionally substituted alkyl group; and an optionally substituted aryl or heteroaryl group; and to a cosmetic treatment method, in particular for depigmenting and/or whitening the skin, employing such a compound.

No. of Pages : 41 No. of Claims : 15

(12) PATENT APPLICATION PUBLICATION
(19) INDIA
(22) Date of filing of Application :17/11/2014
(21) Application No.2618/KOLNP/2014 A
(43) Publication Date : 08/05/2015

(54) Title of the invention : METHOD AND APPARATUS FOR LINKING USER SESSIONS AND ESTABLISHING IDENTITY ACROSS CHANNELS

(51) International classification :H04M3/00
(31) Priority Document No :61/652,022
(32) Priority Date :25/05/2012
(33) Name of priority country :U.S.A.
(86) International Application No :PCT/US2013/042650
Filing Date :24/05/2013
(87) International Publication No :WO 2013/177517
(61) Patent of Addition to Application Number :NA
Filing Date :NA
(62) Divisional to Application Number :NA
Filing Date :NA

(71)**Name of Applicant :**
1)24/7 CUSTOMER, INC.
Address of Applicant :910 E. Hamilton Ave. Ste. 240, Campbell, CA 95008-0610 U.S.A.
(72)**Name of Inventor :**
1)WASSERMAN, Eric
2)NGUYEN, Patrick
3)CHANG, Andrew

(57) Abstract :
A customer support system exchanges customer data, such as the customers identity, activity, etc. across multiple channels to enable better customer service. A further embodiment of the invention collects user interaction data from non- CCS channels, such as Facebook® posts, and predicts the intent of customer to provide services to the customer accordingly.

No. of Pages : 31 No. of Claims : 28

(12) PATENT APPLICATION PUBLICATION
(21) Application No.2619/KOLNP/2014 A
(19) INDIA
(22) Date of filing of Application :17/11/2014
(43) Publication Date : 08/05/2015

(54) Title of the invention : APPARATUS FOR SEPARATING AGRICULTURAL PRODUCTS

(51) International classification :A23N15/02
(31) Priority Document No :PN2012A000041
(32) Priority Date :09/07/2012
(33) Name of priority country :Italy
(86) International Application No :PCT/IB2013/054267
Filing Date :23/05/2013
(87) International Publication No :WO 2014/009820
(61) Patent of Addition to Application Number :NA
Filing Date :NA
(62) Divisional to Application Number :NA
Filing Date :NA

(71)**Name of Applicant :**
1)UNITEC S.P.A.
Address of Applicant :Via ProvincialeCotignola 20/9, I-48022 Lugo (RA) Italy
(72)**Name of Inventor :**
1)BENEDETTI, Luca

(57) Abstract :
Apparatus for the separation of agricultural or vegetable product, with a fixed structure having two parallel horizontal side members, a plurality of cutting modules equipped with a common rotating shaft (32A, 32B, 32C,...) having a plurality of rotating blades (11,12,13,...) in fixed position along its length, said shafts (32A, 32B, 32C,...) being parallel to each other and mounted above conveying means suitable to carry the products placed thereon toward said rotating blades (11,12,13,...), a plurality of positioning ramps (11-1,12-1,13-1,...) mounted in a position corresponding to a respective rotating blade (11,12,13,...) and having a shape elongated in the direction of movement of said conveying means and almost flattened and oriented vertically, the elongate upper edge of which is oriented downward toward said conveying means with an inclination such that the height of said edges increases in the feeding direction of the conveying means, so that the clusters of products placed on said conveying means are carried toward said ramps (11-1, 12-1,13-1,...), the respective upper edge of which determines the point of intersection of the respective blade (11,12,13,...) with the stems of each cluster carried under the blade, wherein: said conveying means include a table formed by a plurality of parallel grooves substantially orthogonal to said rotating shafts (32A, 32B, 32C,...) and reciprocally separated by respective raised portions; said table moves in a direction parallel to said grooves; said ramps are arranged in positions corresponding to said respective grooves.

No. of Pages : 34 No. of Claims : 5

(12) PATENT APPLICATION PUBLICATION
(19) INDIA
(22) Date of filing of Application :26/11/2014
(21) Application No.2724/KOLNP/2014 A
(43) Publication Date : 08/05/2015

(54) Title of the invention : VARIABLE DEPTH SURGICAL FIXATION

(51) International classification :A61B17/12,A61B17/068,A61B17/128
(31) Priority Document No :61/653,792
(32) Priority Date :31/05/2012
(33) Name of priority country :U.S.A.
(86) International Application No :PCT/IB2013/000647
Filing Date :15/02/2013
(87) International Publication No :WO 2013/179106
(61) Patent of Addition to Application Number :NA
Filing Date :NA
(62) Divisional to Application Number :NA
Filing Date :NA

(71)**Name of Applicant :**
1)VIA SURGICAL LTD.
Address of Applicant :MitzpeKineret 22/1, 20115 MoshavAmirim Israel
(72)**Name of Inventor :**
1)LEVY, Arie
2)LEVIN, Ofek
3)LEVIN, Lena

(57) Abstract :
The invention generally relates to devices for fastening a hernia mesh. The invention provides a surgical fastening device that includes a shaft with a fastener carrier disposed at least partially within the shaft, in which the carrier is configured to accept fasteners of a plurality of different sizes. Different sized fasteners can be preloaded in interchangeable carriers or even mixed together within a carrier in the fastening device. The device can deliver the fasteners to different depths in a patients tissue.

No. of Pages : 70 No. of Claims : 36

(12) PATENT APPLICATION PUBLICATION
(19) INDIA
(22) Date of filing of Application :26/11/2014
(21) Application No.2725/KOLNP/2014 A
(43) Publication Date : 08/05/2015

(54) Title of the invention : LINING STRUCTURE FOR MOLTEN-METAL CONTAINER

(51) International classification :C21C7/00,B22D41/02,F27D1/00
(31) Priority Document No :2012-123106
(32) Priority Date :30/05/2012
(33) Name of priority country :Japan
(86) International Application No :PCT/JP2013/065045
Filing Date :30/05/2013
(87) International Publication No :WO 2013/180219
(61) Patent of Addition to Application Number :NA
Filing Date :NA
(62) Divisional to Application Number :NA
Filing Date :NA

(71)**Name of Applicant :**
1)JFE STEEL CORPORATION
Address of Applicant :2-3, Uchisaiwai-cho 2-chome, Chiyoda-ku, Tokyo 1000011 Japan
(72)**Name of Inventor :**
1)INOUE Akihiko
2)KIYOTA Yoshisato

(57) Abstract :
A lining structure for a molten-metal container for containing a molten metal, wherein the lining structure is provided with: a steel shell constituting the outermost layer of the molten-metal container, the steel shell having a plurality of through-holes passing through an outer surface and an inner surface; a single-layer or double-layer permanent refractory layer provided on the inner side of the steel shell; a workpiece refractory layer provided on the inner side of the permanent refractory layer and at least partially composed of a castable refractory, the workpiece refractory layer forming an operation surface contacting the molten metal; and a plurality of layers of an insulating material that is a sheet-shaped polygonal member adjacently disposed with respect to the inner surface of the steel shell, the layers of the insulating material being installed between the steel shell and the permanent refractory layer or between two layers of the permanent refractory layer. A gap is formed between one of the insulating layers and at least one of the other insulating layers adjacently disposed with respect to the insulating layer, the gap being positioned on a through hole and having a thickness equal to or greater than the insulating material.

No. of Pages : 41 No. of Claims : 3

(12) PATENT APPLICATION PUBLICATION
(21) Application No.2645/KOLNP/2014 A
(19) INDIA
(22) Date of filing of Application :19/11/2014
(43) Publication Date : 08/05/2015

(54) Title of the invention : CALL PANEL FOR AN ELEVATOR

(51) International classification :B66B1/46
(31) Priority Document No :20125625
(32) Priority Date :07/06/2012
(33) Name of priority country :Finland
(86) International Application No :PCT/FI2013/050618
Filing Date :06/06/2013
(87) International Publication No :WO 2013/182756
(61) Patent of Addition to Application Number :NA
Filing Date :NA
(62) Divisional to Application Number :NA
Filing Date :NA

(71)**Name of Applicant :**
1)KONE CORPORATION
Address of Applicant :Kartanontie 1, FI-00330 Helsinki Finland
(72)**Name of Inventor :**
1)LÖFBERG, Niklas
2)TIAINEN, Timo
3)PURSIAINEN, Maija
4)HATAKKA, Rauno

(57) Abstract :
The object of the invention is a call panel for an elevator. The call panel comprises an essentially planar front surface and a center panel (107) bounding the front surface, and at least one call pushbutton (108) separate from the display panel (112) and belonging to the front surface.

No. of Pages : 17 No. of Claims : 12

(12) PATENT APPLICATION PUBLICATION
(21) Application No.2646/KOLNP/2014 A
(19) INDIA
(22) Date of filing of Application :19/11/2014
(43) Publication Date : 08/05/2015

(54) Title of the invention : BLIND DECODING METHOD, WIRELESS BASE STATION, USER TERMINAL, AND WIRELESS COMMUNICATIONS SYSTEM

(51) International classification :H04W72/04
(31) Priority Document No :2012-109900
(32) Priority Date :11/05/2012
(33) Name of priority country :Japan
(86) International Application No :PCT/JP2013/063156
Filing Date :10/05/2013
(87) International Publication No :WO 2013/168794
(61) Patent of Addition to Application Number :NA
Filing Date :NA
(62) Divisional to Application Number :NA
Filing Date :NA

(71)**Name of Applicant :**
1)NTT DOCOMO, INC.
Address of Applicant :11-1, Nagatacho 2-chome, Chiyoda-ku, Tokyo 1006150 Japan
(72)**Name of Inventor :**
1)TAKEDA, Kazuaki
2)MU, Qin
3)LIU, Liu
4)CHEN, Lan

(57) Abstract :
The purpose of the present invention is to enable adjustment of the number of blind decoding operations, by enabling a suitable number of search space candidates to be set for when expanded PDCCH are used in addition to existing PDCCH. This blind decoding method whereby a user terminal blind decodes downlink control information sent from a wireless base station device by using at least either existing PDCCH or expanded PDCCH that are frequency-division multiplied with PDSCH, has: a step in which the wireless base station notifies the user terminal of the candidate number setting information used for setting the number of search space candidates for existing PDCCH and the number of search space candidates for the expanded PDCCH; and a step in which the user terminal blind decodes the downlink control information, on the basis of the number of search base candidates for the existing PDCCH and the number of search space candidates for the expanded PDCCH, set on the basis of the candidate number setting information.

No. of Pages : 112 No. of Claims : 13

(12) PATENT APPLICATION PUBLICATION
(19) INDIA
(22) Date of filing of Application :27/11/2014
(21) Application No.2740/KOLNP/2014 A
(43) Publication Date : 08/05/2015

(54) Title of the invention : STABILIZED GP120

(51) International classification :A61K39/21,C07K14/005
(31) Priority Document No :61/661,050
(32) Priority Date :18/06/2012
(33) Name of priority country :U.S.A.
(86) International Application No :PCT/EP2013/062553
Filing Date :17/06/2013
(87) International Publication No :WO 2013/189901
(61) Patent of Addition to Application Number :NA
Filing Date :NA
(62) Divisional to Application Number :NA
Filing Date :NA

(71)**Name of Applicant :**
1)NOVARTIS AG
Address of Applicant :Lichtstrasse 35, CH-4056 Basel Switzerland
(72)**Name of Inventor :**
1)CARFI, Andrea
2)DEY, Antu
3)KASSA, Aemro
4)SRIVASTAVA, Indresh

(57) Abstract :
The present invention provides an isolated polypeptide comprising an HIV gp120 polypeptideor soluble gp140 polypeptidestabilized in a conformation which exposes both CD4-bound and CD4- binding site epitopes. The invention also provides immunogenic compositions and methods of treating and preventing infection with HIV.

No. of Pages : 43 No. of Claims : 23

(12) PATENT APPLICATION PUBLICATION
(19) INDIA
(22) Date of filing of Application :27/11/2014
(21) Application No.2741/KOLNP/2014 A
(43) Publication Date : 08/05/2015

(54) Title of the invention : SYSTEMS AND METHODS FOR PREVENTING THERMITE REACTIONS IN ELECTROLYTIC CELLS

(51) International classification :C25D17/00,C25D17/02,C25D3/44
(31) Priority Document No :61/684,212
(32) Priority Date :17/08/2012
(33) Name of priority country :U.S.A.
(86) International Application No :PCT/US2013/000190
Filing Date :19/08/2013
(87) International Publication No :WO 2014/028045
(61) Patent of Addition to Application Number :NA
Filing Date :NA
(62) Divisional to Application Number :NA
Filing Date :NA

(71)**Name of Applicant :**
1)ALCOA INC.
Address of Applicant :Alcoa Corporate Center, 201 Isabella Street, Pittsburgh, PA15219-1818 U.S.A.
(72)**Name of Inventor :**
1)D'ASTOLFO, Leroy, E.
2)STEINER, William, J.
3)MORELAND, Eric, C.
4)KOZAREK, Robert, L.
5)RUAN, Yimin

(57) Abstract :
A method of monitoring an electrolytic cell including detecting information indicative of a thermite reaction, comparing the information indicative of a thermite reaction to a threshold, generating a thermite response signal according to the comparison, and reacting to the thermite response signal by adjusting the operation of the electrolytic cell.

No. of Pages : 55 No. of Claims : 25

(12) PATENT APPLICATION PUBLICATION
(21) Application No.2742/KOLNP/2014 A
(19) INDIA
(22) Date of filing of Application :27/11/2014
(43) Publication Date : 08/05/2015

(54) Title of the invention : DEVICE AND METHOD FOR CONTROLLING THE TRACKING OF A VALUE DOCUMENT STACK

(51) International classification :B65H1/02,B65H1/14,B65H7/14
(31) Priority Document No :10 2012 017 770.4
(32) Priority Date :07/09/2012
(33) Name of priority country :Germany
(86) International Application No:PCT/EP2013/002690
Filing Date :06/09/2013
(87) International Publication No :WO 2014/037119
(61) Patent of Addition to Application Number :NA
Filing Date :NA
(62) Divisional to Application Number :NA
Filing Date :NA

(71)**Name of Applicant :**
1)GIESECKE & DEVRIENT GMBH
Address of Applicant :Prinzregentenstraße 159, 81677 München Germany
(72)**Name of Inventor :**
1)HILDEBRANDT, Thomas

(57) Abstract :
In order to continuously separate value documents from a value document stack (10), the value document stack is lifted and tracked to the separator (30). In order to control the tracking of the value document stack, an image of one side of the value document stack is taken and evaluated in order to recognize the edges of the individual value documents. The tracking of the value document stack is controlled on the basis of the number of value document edges which are detected in the image taken. If, however, the number of value document edges cannot be detected or can be detected only insufficiently, a brightness of the image in this image portion is also determined. When separating the value documents shown in this image portion, the tracking of the value document stack is controlled on the basis of the brightness detected in this image portion.

No. of Pages : 26 No. of Claims : 16

(12) PATENT APPLICATION PUBLICATION
(19) INDIA
(22) Date of filing of Application :11/11/2014
(21) Application No.2549/KOLNP/2014 A
(43) Publication Date : 08/05/2015

(54) Title of the invention : PORTABLE SAFETY DISH WITH SLIDING LOCK

(51) International classification :B65D55/14,A47G19/00
(31) Priority Document No :13/474,368
(32) Priority Date :17/05/2012
(33) Name of priority country :U.S.A.
(86) International Application No :PCT/US2013/041625
Filing Date :17/05/2013
(87) International Publication No :WO 2013/173737
(61) Patent of Addition to Application Number :NA
Filing Date :NA
(62) Divisional to Application Number :NA
Filing Date :NA

(71)**Name of Applicant :**
1)NELSON, KHALIL & KAYDEN CORPORATION
Address of Applicant :2930 W. 30th Street, Suite 6A3Brooklyn, New York11224 U.S.A.
(72)**Name of Inventor :**
1)WILLIAMSON, Nelson

(57) Abstract :
A safety dish forms a secure food container and has a dish for holding food, a cover for enclosing the dish and food, and a lock mechanism for securing the cover to the dish to prevent unauthorized access to the food and/or tampering with the food. A correct input of a combination is required to access the food contents of the container via a sliding lock mechanism. The safety dish and locking mechanism is preferably formed from dishwasher- safe and microwave-safe materials.

No. of Pages : 15 No. of Claims : 18

(12) PATENT APPLICATION PUBLICATION
(19) INDIA
(22) Date of filing of Application :19/11/2014
(21) Application No.2647/KOLNP/2014 A
(43) Publication Date : 08/05/2015

(54) Title of the invention : APTAMER-BASED MULTIPLEXED ASSAYS

(51) International classification :C12Q1/68,C07H21/00,G01N33/543
(31) Priority Document No :61/656,956
(32) Priority Date :07/06/2012
(33) Name of priority country :U.S.A.
(86) International Application No :PCT/US2013/044792
Filing Date :07/06/2013
(87) International Publication No :WO 2013/185078
(61) Patent of Addition to Application Number :NA
Filing Date :NA
(62) Divisional to Application Number :NA
Filing Date :NA

(71)**Name of Applicant :**
1)SOMALOGIC, INC.
Address of Applicant :2945 Wilderness Place, Boulder, CO80301 U.S.A.
(72)**Name of Inventor :**
1)SANDERS, Glenn
2)KRAEMER, Stephan
3)KATILIUS, Evaldas

(57) Abstract :
The present disclosure describes methods, devices, reagents, and kits for the detection of one or more target molecules that may be present in a test sample. The described methods, devices, kits, and reagents facilitate the detection and quantification of a non-nucleic acid target (e.g., a protein target) in a test sample by detecting and quantifying a nucleic acid (i.e., an aptamer) where the aptamer-aptamer interactions are significantly reduced or eliminated while maintaining the aptamer-target interaction.

No. of Pages : 70 No. of Claims : 73

(12) PATENT APPLICATION PUBLICATION
(19) INDIA
(22) Date of filing of Application :19/11/2014
(21) Application No.2648/KOLNP/2014 A
(43) Publication Date : 08/05/2015

(54) Title of the invention : MOBILE PAYMENT SYSTEM

(51) International classification	:G06Q20/32,G06Q20/20,G06Q20/40
(31) Priority Document No	:13/528,109
(32) Priority Date	:20/06/2012
(33) Name of priority country	:U.S.A.
(86) International Application No	:PCT/US2012/066541
Filing Date	:26/11/2012
(87) International Publication No	:WO 2013/191722
(61) Patent of Addition to Application Number	:NA
Filing Date	:NA
(62) Divisional to Application Number	:NA
Filing Date	:NA

(71)**Name of Applicant :**
1)INTUIT INC.
Address of Applicant :2700 Coast Avenue, Mountain View, California94043 U.S.A.
(72)**Name of Inventor :**
1)RAN, Alexander, S.

(57) Abstract :
During a financial transaction, a customer provides an identifier to a peripheral device (which may be a barcode scanner, a wireless receiver or a keyboard) coupled to the point-of-sale terminal. This identifier corresponds to a one-time payment credential token that includes financial information of the customer. Then, a service object executing on the point-of-sale terminal, which acts as a driver for the peripheral device, performs one or more operations based on at least the identifier to obtain the financial information. After providing the financial information and transaction information associated with the financial transaction to a financial institution specified in the financial information, the point-of-sale terminal receives a confirmation from the financial institution that the financial transaction has been completed.

No. of Pages : 26 No. of Claims : 25

(12) PATENT APPLICATION PUBLICATION
(19) INDIA
(22) Date of filing of Application :27/11/2014
(21) Application No.2746/KOLNP/2014 A
(43) Publication Date : 08/05/2015

(54) Title of the invention : PREVENTING SUBMERSIBLE PUMP AIR LOCK

(51) International classification :B23P15/02,F02M37/04,F04D1/04
(31) Priority Document No :61/659,631
(32) Priority Date :14/06/2012
(33) Name of priority country :U.S.A.
(86) International Application No :PCT/US2013/045839
Filing Date :14/06/2013
(87) International Publication No :WO 2013/188741
(61) Patent of Addition to Application Number :NA
Filing Date :NA
(62) Divisional to Application Number :NA
Filing Date :NA

(71)**Name of Applicant :**
1)FLOW CONTROL LLC.
Address of Applicant :100 Cummings Center, Beverly, Massachusetts 01915 U.S.A.
(72)**Name of Inventor :**
1)LOPES, Jeffrey
2)ESTRADA, Jesus
3)TEED, Kevin

(57) Abstract :
Apparatus, including a pumping system, is provided featuring a pump and a control circuit. The pump has an impeller housing configured with a slit at the top for trapped air to leave the impeller housing once the pump has been submerged. The control circuit is configured to cycle the pump on and off for a predetermined number of cycles so that the trapped air will float to the top and be expelled out the slit when the pump is cycled off. The control circuit is configured to leave the pump on after the predetermined number of cycles.

No. of Pages : 21 No. of Claims : 8

(12) PATENT APPLICATION PUBLICATION
(21) Application No.2748/KOLNP/2014 A
(19) INDIA
(22) Date of filing of Application :28/11/2014
(43) Publication Date : 08/05/2015

(54) Title of the invention : ENGINE TEST DEVICE

(51) International classification :G01M 15/02
(31) Priority Document No :2012-117095
(32) Priority Date :23/05/2012
(33) Name of priority country :Japan
(86) International Application No :PCT/JP2013/064001
Filing Date :21/05/2013
(87) International Publication No :WO 2013/176099
(61) Patent of Addition to Application Number :NA
Filing Date :NA
(62) Divisional to Application Number :NA
Filing Date :NA

(71)**Name of Applicant :**
1)MEIDENSHA CORPORATION
Address of Applicant :1-1, OSAKI 2-CHOME, SHINAGAWA-KU, TOKYO 141-6029 Japan
(72)**Name of Inventor :**
1)YOSHIHIRO YAMAO

(57) Abstract :
In an engine test apparatus of a type to stop a carriage carrying an engine, by pressing a wheel of the carriage to a rail, the wheel and rail may be damaged if the wheel is pressed strongly. An engine test apparatus 1 is arranged to perform an engine performance test by moving a carriage 2 carrying an engine, along a rail 3, to the position of a dynamometer. Carriage 2 comprises a base 11 supporting the engine, casters 1215 attached to base 11, and a fixing portion 17 to position and fix base 11 on the rail. Casters 1215 include a spring 19 to be compressed when the base is fixed by the fixing portion.

No. of Pages : 28 No. of Claims : 7

(12) PATENT APPLICATION PUBLICATION
(19) INDIA
(22) Date of filing of Application :03/11/2014
(21) Application No.2459/KOLNP/2014 A
(43) Publication Date : 08/05/2015

(54) Title of the invention : METHOD AND SYSTEM FOR VIEWING MOVIES

(51) International classification :H04H60/33
(31) Priority Document No :61/646,428
(32) Priority Date :14/05/2012
(33) Name of priority country :U.S.A.
(86) International Application No :PCT/US2013/040860
Filing Date :14/05/2013
(87) International Publication No :WO 2013/173272
(61) Patent of Addition to Application Number :NA
Filing Date :NA
(62) Divisional to Application Number :NA
Filing Date :NA

(71)**Name of Applicant :**
1)ATKIN, Cihan
Address of Applicant :701 Highland Ridge Avenue, Gaithersburg, MD 20870 U.S.A.
(72)**Name of Inventor :**
1)ATKIN, Cihan

(57) Abstract :
Techniques are presented herein for delivering multimedia content to members of an audience. At a content delivery device, an activation event is detected that causes the content delivery device to operate in a first mode to detect a presence of one or more of members of an audience in a viewing area. A number of members of the audience in the viewing area is determined. The content delivery device switches to a second mode to initiate a payment request event. The payment request event requests payment for the multimedia content based on the number of members of the audience. A determination is made as to whether an appropriate payment has been received based on the number of members of the audience. When the appropriate payment has been received, the content delivery device switches to a third mode to deliver the multimedia content to the members of the audience in the viewing area.

No. of Pages : 26 No. of Claims : 20

(12) PATENT APPLICATION PUBLICATION
(19) INDIA
(22) Date of filing of Application :28/11/2014
(21) Application No.2750/KOLNP/2014 A
(43) Publication Date : 08/05/2015

(54) Title of the invention : METHOD AND SYSTEM FOR ACTIVATION

(51) International classification :G06F21/34,G06Q20/34,G07F7/10
(31) Priority Document No :13/459,331
(32) Priority Date :30/04/2012
(33) Name of priority country :U.S.A.
(86) International Application No :PCT/US2013/035578
Filing Date :08/04/2013
(87) International Publication No :WO 2013/165651
(61) Patent of Addition to Application Number :NA
Filing Date :NA
(62) Divisional to Application Number :NA
Filing Date :NA

(71)**Name of Applicant :**
1)ORACLE INTERNATIONAL CORPORATION
Address of Applicant :500 Oracle Parkway, Mail Stop 5op7, Redwood Shores, CA 94065 U.S.A.
(72)**Name of Inventor :**
1)HANS, Sebastian
2)GLASMAN, Alexander
3)IVANOVA, Natalia

(57) Abstract :
An activation method includes a security module card verifying an activation server using a shared secret key and a first challenge, mediating a verification of the activation server by a mobile device, and encrypting the second challenge using a generated key to obtain an encrypted second challenge. The security module card further transmits the encrypted second challenge and a third challenge to the mobile device. The method further includes receiving an encrypted third challenge from the mobile device, decrypting the encrypted third challenge to obtain a received third challenge, verifying the mobile device based on the received third challenge being equal to the third challenge sent to the mobile device, and sending a validation of mutual trust between the security module card and the mobile device to the activation server.

No. of Pages : 47 No. of Claims : 20

(12) PATENT APPLICATION PUBLICATION
(19) INDIA
(22) Date of filing of Application :28/11/2014
(21) Application No.2751/KOLNP/2014 A
(43) Publication Date : 08/05/2015

(54) Title of the invention : CONVEYOR BELT MODULE WITH BEARING RETAINER

(51) International classification :B65G17/08,B65G21/22
(31) Priority Document No :61/652,936
(32) Priority Date :30/05/2012
(33) Name of priority country :U.S.A.
(86) International Application No :PCT/US2013/043291
Filing Date :30/05/2013
(87) International Publication No :WO 2013/181354
(61) Patent of Addition to Application Number :NA
Filing Date :NA
(62) Divisional to Application Number :NA
Filing Date :NA

(71)**Name of Applicant :**
1)REXNORD INDUSTRIES, LLC
Address of Applicant :4701 West Greenfield Avenue, Milwaukee, WI 53214 U.S.A.
(72)**Name of Inventor :**
1)STEFANKO, Justin, Michael
2)MITCHELL, Robert, E.

(57) Abstract :
A conveyor belt module includes a body (101), a link end (106) formed by the body, and an opening (110) through the link end along a hinge axis. A cover (114) extends from the body in a direction of the hinge axis and a post (118) extends from the cover; a bearing (109) is rotatably engaged with the post. A fastener (128) engages the post to capture the bearing between the cover and the fastener, such that the bearing is housed at least partially between the upper and lower extremes of the body. A track (7) for supporting and guiding the conveyor belt module includes a guide arm (21) extending into a guide channel (22) defined by the body to engage the bearing. The conveyor belt module may also include laterally offset protrusions (510,511,512) extending from the link end in opposite directions to inhibit engagement with a drive member.

No. of Pages : 53 No. of Claims : 21

(12) PATENT APPLICATION PUBLICATION
(21) Application No.2752/KOLNP/2014 A
(19) INDIA
(22) Date of filing of Application :28/11/2014
(43) Publication Date : 08/05/2015

(54) Title of the invention : BETA-HAIRPIN PEPTIDOMIMETICS

(51) International classification :C07K7/64
(31) Priority Document No :NA
(32) Priority Date :NA
(33) Name of priority country :NA
(86) International Application No :PCT/EP2012/060766
Filing Date :06/06/2012
(87) International Publication No :WO 2013/182240
(61) Patent of Addition to Application Number :NA
Filing Date :NA
(62) Divisional to Application Number :NA
Filing Date :NA

(71)**Name of Applicant :**
1)POLYPHOR AG
Address of Applicant :Hegenheimermattweg 125, CH-4123 Allschwil Switzerland
(72)**Name of Inventor :**
1)GOMBERT, Frank Otto
2)OBRECHT, Daniel
3)LEDERER, Alexander
4)ZIMMERMANN, Johann
5)OEFNER, Christian

(57) Abstract :
β-Hairpin peptidomimetics of the general formula cyclo(-Tyr1-His2-Xaa3-Cys4-Ser5-Xaa6-DPro7-Xaa8-Arg9-Tyr10-Cys11-Tyr12-Xaa13-Xaa14-Xaa15-Pro16-), disulfide bond between Cys4 and Cys11, and pharmaceutically acceptable salts thereof, with Xaa3, Xaa6, Xaa8, Xaa13, Xaa14 and Xaa15 being amino acid residues of certain types which are defined in the description and the claims, have favorable pharmacological properties and can be used for preventing HIV infections in healthy individuals or for slowing and halting viral progression in infected patients; or where cancer is mediated or resulting from CXCR4 receptor activity; or where immunological diseases are mediated or resulting from CXCR4 receptor activity; or for treating immunosuppression; or during apheresis collections of peripheral blood stem cells and/or as agents to induce mobilization of stem cells to regulate tissue repair. These peptidomimetics can be manufactured by a process which is based on a mixed solid-and solution phase synthetic strategy.

No. of Pages : 47 No. of Claims : 8

(12) PATENT APPLICATION PUBLICATION
(21) Application No.2569/KOLNP/2014 A
(19) INDIA
(22) Date of filing of Application :12/11/2014
(43) Publication Date : 08/05/2015

(54) Title of the invention : NEW PROCESS AND A DISSOLVING PULP MANUFACTURED BY THE PROCESS

(51) International classification :D21C3/02,C08B9/00,C13K13/00
(31) Priority Document No :1250540.0
(32) Priority Date :28/05/2012
(33) Name of priority country :Sweden
(86) International Application No :PCT/EP2013/060926
Filing Date :28/05/2013
(87) International Publication No :WO 2013/178608
(61) Patent of Addition to Application Number :NA
Filing Date :NA
(62) Divisional to Application Number :NA
Filing Date :NA

(71)**Name of Applicant :**
1)SÖDRA CELLAB
Address of Applicant :Skogsudden, S-351 89 Växjö Sweden
2)LENZING AKTIENGESELLSCHAFT
(72)**Name of Inventor :**
1)BOGREN, Johannes
2)PARKÅS, Jim
3)SCHILD, Gabriele
4)BORGARDS, Andrea

(57) Abstract :
The present document relates to processes for manufacturing pulp and more specifically to improved processes for manufacturing dissolving pulp. The processes have primarily been developed to be used in connection with large scale kraft processes, i.e. they have been designed to be incorporated into a plant. A liquor derivable from the process and comprising xylan, lignin, alkali and water is also disclosed as well as a dissolving pulp produced by the process.

No. of Pages : 34 No. of Claims : 24

(12) PATENT APPLICATION PUBLICATION
(19) INDIA
(22) Date of filing of Application :21/11/2014
(21) Application No.2670/KOLNP/2014 A
(43) Publication Date : 08/05/2015

(54) Title of the invention : PROCESS FOR PRODUCING 4-CYCLOHEXYL-2-METHYL-2-BUTANOL

(51) International classification	:C07C29/10,C07C29/132,C07C29/19
(31) Priority Document No	:61/664,982
(32) Priority Date	:27/06/2012
(33) Name of priority country	:U.S.A.
(86) International Application No	:PCT/EP2013/063159
Filing Date	:24/06/2013
(87) International Publication No	:WO 2014/001266
(61) Patent of Addition to Application Number	:NA
Filing Date	:NA
(62) Divisional to Application Number	:NA
Filing Date	:NA

(71)**Name of Applicant :**
1)FIRMENICH SA
Address of Applicant :1, route des Jeunes, P. O. Box 239, CH-1211 Geneva 8 Switzerland
(72)**Name of Inventor :**
1)VANHESSCHE, Koenraad P.
2)LERESCHE, Jean-Paul

(57) Abstract :
The present invention relates to the field of perfumery. More particularly, it concerns a process for the preparation of 2-methyl-4-phenyl-2-butanol, or even 4-cyclohexyl-2-methyl-2-butanol from 4,4-dimethyl-2,6-diphenyl-1,3-dioxane.

No. of Pages : 12 No. of Claims : 7

(12) PATENT APPLICATION PUBLICATION
(19) INDIA
(22) Date of filing of Application :21/11/2014
(21) Application No.2671/KOLNP/2014 A
(43) Publication Date : 08/05/2015

(54) Title of the invention : A METHOD AND SYSTEM FOR MANAGING EXECUTION OF PROGRAMS BY MULTIPLE COMPUTING SYSTEMS

(51) International classification :G06F3/00
(31) Priority Document No :11/395,463
(32) Priority Date :31/03/2006
(33) Name of priority country :U.S.A.
(86) International Application No :PCT/US2007/007601
Filing Date :29/03/2007
(87) International Publication No :WO2007/126837
(61) Patent of Addition to Application Number :NA
Filing Date :NA
(62) Divisional to Application Number :3742/KOLNP/2008
Filed on :12/09/2008

(71)**Name of Applicant :**
1)AMAZON TECHNOLOGIES, INC.
Address of Applicant :P.O. BOX 8102, RENO, NEVADA89507 U.S.A.
(72)**Name of Inventor :**
1)PATERSON-JONES, ROLAND
2)PINKHAM, CHRISTOPHER, C.
3)TOBLER, BENJAMIN
4)VAN BILJON, WILLEM, R.
5)SMIT, GABRIEL
6)BROWN, CHRISTOPHER
7)HOOLE, QUINTON, R.

(57) Abstract :
A method and system for execution of programs (384) by multiple computing systems (370) are disclosed. The computer-implemented method involves: receiving, by one or more computing systems for a program execution service, one or more requests from a client of the program execution service, the received one or more requests including at least an indication of an operating system and configuration information related to executing the operating system; selecting (415, 420) by the one or more computing systems, one or more computing nodes of the program execution service to use for execution of the indicated operating system; and causing, by the one or more computer systems, the one or more selected computing nodes to execute one or more instances of the indicated operating system within one or more virtual machines, the causing of the execution being based at least in part on the received configuration information.

No. of Pages : 53 No. of Claims : 31

(12) PATENT APPLICATION PUBLICATION
(21) Application No.2765/KOLNP/2014 A
(19) INDIA
(22) Date of filing of Application :01/12/2014
(43) Publication Date : 08/05/2015

(54) Title of the invention : VALUE DOCUMENT, METHOD FOR CHECKING THE PRESENCE OF SAME AND VALUE DOCUMENT SYSTEM

(51) International classification :B42D15/00,G07D7/12,B41M3/14
(31) Priority Document No :10 2012 013 244.1
(32) Priority Date :03/07/2012
(33) Name of priority country :Germany
(86) International Application No :PCT/EP2013/001905
Filing Date :28/06/2013
(87) International Publication No :WO 2014/005686
(61) Patent of Addition to Application Number :NA
Filing Date :NA
(62) Divisional to Application Number :NA
Filing Date :NA

(71)**Name of Applicant :**
1)GIESECKE & DEVRIENT GMBH
Address of Applicant :Prinzregentenstrasse 159, 81677 München Germany
(72)**Name of Inventor :**
1)KECHT, Johann
2)RAUSCHER, Wolfgang
3)STEINLEIN, Stephan

(57) Abstract :
The invention relates to a value document having luminescent, particulate agglomerates which each contain at least two different luminescent solid homogeneous phases emitting with a first and a second emission wavelength, wherein, during an evaluation of measured values which can be obtained by a location-specific measurement, carried out at different locations, of the first luminescent intensity at the first emission wavelength and the second luminescent intensity at the second emission wavelength, there is a statistical correlation between the first luminescent intensities and the second luminescent intensities.

No. of Pages : 43 No. of Claims : 9

(12) PATENT APPLICATION PUBLICATION
(19) INDIA
(22) Date of filing of Application :01/12/2014
(21) Application No.2766/KOLNP/2014 A
(43) Publication Date : 08/05/2015

(54) Title of the invention : GAMMA PROBE HEALTH DETECTION ASSEMBLY

(51) International classification :G01V5/12
(31) Priority Document No :61/835,188
(32) Priority Date :14/06/2013
(33) Name of priority country :U.S.A.
(86) International Application No :PCT/US2014/042421
Filing Date :13/06/2014
(87) International Publication No :WO2014/201429
(61) Patent of Addition to Application Number :NA
Filing Date :NA
(62) Divisional to Application Number :NA
Filing Date :NA

(71)**Name of Applicant :**
1)REME TECHNOLOGIES, LLC
Address of Applicant :701 CONROE PARK NORTH DRIVECONROE, TX 77303 U.S.A.
(72)**Name of Inventor :**
1)MILLER, KENNETH
2)ERDOS, ABRAHAM
3)ERDOS, DAVID
4)MATHIESON, JAMES
5)CARTER, JOSHUA

(57) Abstract :
An improved gamma controller health detection assembly to facilitate reliable downhole measurement of naturally occurring radiation is disclosed. The gamma controller assembly includes one or more gamma sensors, a micro-controller, memory, and input/output ports among other components. The gamma sensors detect radiation and output pulses that are received by the microcontroller. The sensor data can be checked, selected, and averaged by the microcontroller, and sent uphole to another microcontroller or computer that can then further process, communicate, and display the data. The sensor data can be averaged and stored to memory or stored as independent values to memory. The gamma controller health detection assembly can be configured to run algorithms that detect if one or more gamma sensors appear to be malfunctioning or have previously malfunctioned.

No. of Pages : 50 No. of Claims : 28

(12) PATENT APPLICATION PUBLICATION
(21) Application No.2686/KOLNP/2014 A
(19) INDIA
(22) Date of filing of Application :24/11/2014
(43) Publication Date : 08/05/2015

(54) Title of the invention : OPTOACOUSTIC IMAGING SYSTEM WITH FIBER OPTIC CABLE

(51) International classification :A61B8/00
(31) Priority Document No :13/507,184
(32) Priority Date :13/06/2012
(33) Name of priority country :U.S.A.
(86) International Application No :PCT/US2013/045738
Filing Date :13/06/2013
(87) International Publication No :WO 2013/188709
(61) Patent of Addition to Application Number :NA
Filing Date :NA
(62) Divisional to Application Number :NA
Filing Date :NA

(71)**Name of Applicant :**
1)SENO MEDICAL INSTRUMENTS, INC.
Address of Applicant :5253 Prue Road, Suite 315, San Antonio, Texas78240 U.S.A.
(72)**Name of Inventor :**
1)HERZOG, Donald
2)JOY, James

(57) Abstract :
An optoacoustic imaging system comprising a light source, a handheld probe and a fiber optic cable is disclosed. The light source is capable of generating at least one pulse of light. The handheld probe comprising a transducer array capable of receiving an optoacoustic return signal. In an embodiment, the fibers being randomized between the input and the output in a manner that prevents a local anomaly affecting an adjacent group of the fibers at the input from affecting an adjacent group of the fibers at the output. In an embodiment, the output of the fiber optic cable being organized into multiple groups, and the fibers being intermingled between the input and the output in a manner that prevents a local anomaly affecting an adjacent group of the fibers at the input from disproportionately affecting one or more of the output groups.

No. of Pages : 195 No. of Claims : 21

(12) PATENT APPLICATION PUBLICATION
(19) INDIA
(22) Date of filing of Application :24/11/2014
(21) Application No.2687/KOLNP/2014 A
(43) Publication Date : 08/05/2015

(54) Title of the invention : SUB-EPIDERMAL ELECTRIC WARNING DEVICE

(51) International classification :A61B5/145,A61M5/142,A61M5/50
(31) Priority Document No :12173390.1
(32) Priority Date :25/06/2012
(33) Name of priority country :EPO
(86) International Application No :PCT/EP2013/062180
Filing Date :12/06/2013
(87) International Publication No :WO 2014/001091
(61) Patent of Addition to Application Number :NA
Filing Date :NA
(62) Divisional to Application Number :NA
Filing Date :NA

(71)**Name of Applicant :**
1)PHARMASENS AG
Address of Applicant :Neumattenweg 8, CH-4105 Biel-Benken Switzerland
(72)**Name of Inventor :**
1)HADVÁRY, Paul
2)TSCHIRKY, Hansjörg
3)DINGER, Rudolf
4)MICHOT, Jean-Pierre

(57) Abstract :
A sub-epidermal electric warning device has electrodes penetrating through the patients epidermis and bipolar electric warning signals are transmitted to the sub-epidermal tissue by these electrodes. A device for surveillance of vital signs, analyte levels, or treatment parameters is using a sub-epidermal electric warning device for notifying the patient in situations requiring intervention.

No. of Pages : 31 No. of Claims : 19

(12) PATENT APPLICATION PUBLICATION
(19) INDIA
(22) Date of filing of Application :03/12/2014
(21) Application No.2794/KOLNP/2014 A
(43) Publication Date : 08/05/2015

(54) Title of the invention : THREE-STEP CORE FOR A NON-LINEAR TRANSFORMER

(51) International classification :H01F27/245,H01F27/26
(31) Priority Document No :13/489,565
(32) Priority Date :06/06/2012
(33) Name of priority country :U.S.A.
(86) International Application No :PCT/US2013/044434
Filing Date :06/06/2013
(87) International Publication No :WO 2013/184872
(61) Patent of Addition to Application Number :NA
Filing Date :NA
(62) Divisional to Application Number :NA
Filing Date :NA

(71)**Name of Applicant :**
1)ABB TECHNOLOGY AG
Address of Applicant :AFFOLTERNSTRASSE 44, CH-8050 ZURICH Switzerland
(72)**Name of Inventor :**
1)OUTTEN, SAMUEL, S
2)HARTMANN, THOMAS, A

(57) Abstract :
A three step non-linear transformer core is formed from three sections of laminations each having different widths and cross-sectional areas. A first section of laminations is formed by cross-slitting a generally rectangular sheet or strip of metal. A resulting generally triangular segment is then wound upon a mold to form a first section of a core frame having a trapezoidal cross section. A second section of laminations is wound upon the first section of laminations to form a segment of a core frame having a rhombic cross section. The third section of laminations is wound upon the second section of laminations to form a segment of a core frame having a trapezoidal cross section. Each of the first, second, and third sections of laminations are offset from one another by a predetermined angle of offset.

No. of Pages : 19 No. of Claims : 19

(12) PATENT APPLICATION PUBLICATION
(19) INDIA
(22) Date of filing of Application :03/12/2014
(21) Application No.2797/KOLNP/2014 A
(43) Publication Date : 08/05/2015

(54) Title of the invention : METHOD FOR PROCESSING DATA

(51) International classification :G05B 13/02
(31) Priority Document No :A50225/2012
(32) Priority Date :08/06/2012
(33) Name of priority country :Australia
(86) International Application No :PCT/EP2013/061796
Filing Date :07/06/2013
(87) International Publication No :WO 2013/182681
(61) Patent of Addition to Application Number :NA
Filing Date :NA
(62) Divisional to Application Number :NA
Filing Date :NA

(71)**Name of Applicant :**
1)A VL LIST GMBH
Address of Applicant :HANS-LIST-PLATZ 1, A-8020 GRAZ, Australia
(72)**Name of Inventor :**
1)STORFER,GERHARD
2)THAMERL, STEFAM
3)SCHUCH, NIKOLAS

(57) Abstract :
A method for processing data with parameters of a vehicle, power train or power train component of different origin comprises reading out of the data and the carrying out a statistical analysis for determining the minimum and maximum axis values of the data associated with the same parameters. Subsequently, the data is converted and compressed into a common format, and the data associated with the same parameters is provided with common axes and the same number of sampling points, wherein the start and end figures of the axes results from the minimum and maximum axis figures. The data processed in this way may then be subjected to further processing.

No. of Pages : 12 No. of Claims : 11

(12) PATENT APPLICATION PUBLICATION
(21) Application No.2798/KOLNP/2014 A
(19) INDIA
(22) Date of filing of Application :03/12/2014
(43) Publication Date : 08/05/2015

(54) Title of the invention : A STRONG INSECTICIDAL NET

(51) International classification :A01N25/10,A01N25/34
(31) Priority Document No :12168399.9
(32) Priority Date :16/05/2012
(33) Name of priority country :EPO
(86) International Application No :PCT/EP2013/059636
Filing Date :08/05/2013
(87) International Publication No :WO 2013/171118
(61) Patent of Addition to Application Number :NA
Filing Date :NA
(62) Divisional to Application Number :NA
Filing Date :NA

(71)**Name of Applicant :**
1)VEGRO APS
Address of Applicant :STORE SØNDERVOLDSTRÆDE 9, SECOND FLOOR, DK-KØBENHAVN K DENMARK
(72)**Name of Inventor :**
1)SKOVMAND, OLE

(57) Abstract :
Present invention relates to an insecticidal textile product having at least a first yarn type and second yarn type, said first yarn type comprises an insecticide and the second yarn type does not contain an insecticide, repellent or chemosterilant. Preferred is an insecticidal textile product comprising a first yarn made of polyethylene and a second yarn not containing insecticide and is preferably made of pure HDPE polyethylene and made into a bed net for the prevention of malaria.

No. of Pages : 34 No. of Claims : 15

(12) PATENT APPLICATION PUBLICATION
(19) INDIA
(22) Date of filing of Application :05/11/2014
(21) Application No.2495/KOLNP/2014 A
(43) Publication Date : 08/05/2015

(54) Title of the invention : PRODUCT DISPENSING SYSTEM WITH TAPERED CATCH ELEMENT

(51) International classification :A47F1/08
(31) Priority Document No :13/453,538
(32) Priority Date :23/04/2012
(33) Name of priority country :U.S.A.
(86) International Application No :PCT/US2013/037287
Filing Date :19/04/2013
(87) International Publication No :WO 2013/163014
(61) Patent of Addition to Application Number :NA
Filing Date :NA
(62) Divisional to Application Number :NA
Filing Date :NA

(71)**Name of Applicant :**
1)MEADWESTVACO CORPORATION
Address of Applicant :501 South 5th Street, Richmond, Virginia23219-0501U.S.A.
(72)**Name of Inventor :**
1)Matthew E. ZACHERLE
2)Aaron L. BATES
3)Caleb S. LOFTIN

(57) Abstract :
A product dispensing system including a dispenser having a front end longitudinally opposed from a rear end, the dispenser including a first support deck extending at least partially between the front end and the rear end, a catch element connected proximate the first support deck, the catch element including a front edge, wherein the front edge is tapered to a forward-most end, and a second support deck positioned below the first support deck, the second support defining a product display area.

No. of Pages : 33 No. of Claims : 20

(12) PATENT APPLICATION PUBLICATION
(21) Application No.2595/KOLNP/2014 A
(19) INDIA
(22) Date of filing of Application :14/11/2014
(43) Publication Date : 08/05/2015

(54) Title of the invention : STRUCTURE AGAINST SIDE IMPACT

(51) International classification	:B62D 25/04,B60N2/427
(31) Priority Document No	:2012-102924
(32) Priority Date	:27/04/2012
(33) Name of priority country	:Japan
(86) International Application No	:PCT/JP2013/061199
Filing Date	:15/04/2013
(87) International Publication No	:WO 2013/161612
(61) Patent of Addition to Application Number	:NA
Filing Date	:NA
(62) Divisional to Application Number	:NA
Filing Date	:NA

(71)**Name of Applicant :**
1)NISSAN MOTOR CO., LTD.
Address of Applicant :2, TAKARA-CHO, KANAGAWA-KU YOKOHAMA-SHI, KANAGAWA 221-0023, Japan
(72)**Name of Inventor :**
1)TAIJI IKEDA
2)TATSUZO TOMITA
3)MASATO SAKURAI
4)TOSHIYA SAGARA

(57) Abstract :
A structure against a side impact includes a side wall of a vehicle body, a seatback frame, and a load receiving member disposed on the seatback frame to contact with the side wall of the vehicle body and to receive an impact load when the side wall of the vehicle body is moved toward a vehicle cabin by a side impact. Strength of an upper area of the side wall of the vehicle body is made higher than strength of a lower area of the side wall of the vehicle body. An upper end of the upper area is located lateral to the load receiving member. According to the structure against a side impact, intrusion of the side wall of the vehicle body can be suppressed in consideration of an intrusion mode of the side wall of the vehicle body to an inside of a vehicle.

No. of Pages : 14 No. of Claims : 3

(12) PATENT APPLICATION PUBLICATION
(21) Application No.2596/KOLNP/2014 A
(19) INDIA
(22) Date of filing of Application :14/11/2014
(43) Publication Date : 08/05/2015

(54) Title of the invention : PIEZOELECTRIC VALVE, AND OPTICAL PARTICULATE MATTER SORTER PROVIDED WITH AIR-BLOWING MEANS THAT USES PIEZOELECTRIC VALVE

(51) International classification :F16K31/02,B07C5/36
(31) Priority Document No :2012-096605
(32) Priority Date :20/04/2012
(33) Name of priority country :Japan
(86) International Application No :PCT/JP2013/061300
Filing Date :16/04/2013
(87) International Publication No :WO 2013/157548
(61) Patent of Addition to Application Number :NA
Filing Date :NA
(62) Divisional to Application Number :NA
Filing Date :NA

(71)**Name of Applicant :**
1)SATAKE CORPORATION
Address of Applicant :7-2, Sotokanda 4-chome, Chiyoda-ku, Tokyo 1010021 Japan
2)MECHANO TRANSFORMER CORPORATION
(72)**Name of Inventor :**
1)ITO, Takafumi
2)TAKEUCHI, Teruhiko
3)MATSUSHITA, Tadashi
4)CHEE, SzeKeat
5)YANO, Takeshi
6)KAMIMA, Takeshi
7)HIGUCHI, Toshiro

(57) Abstract :
Provided is a piezoelectric valve which is capable of stably supplying gas even when the gas jet time becomes longer, and is excellent in responsiveness when being open. A piezoelectric valve comprises a gas pressure chamber which receives compressed gas supplied from the outside, and a gas discharge path through which the compressed gas is discharged from the gas pressure chamber, the piezoelectric valve being provided with: a valve element which is disposed in the gas pressure chamber and opens and closes the gas discharge path; a piezoelectric element which generates, as displacement, driving force required for the operation of the valve element; a displacement magnification mechanism which magnifies the displacement of the piezoelectric element and causes the displacement to act on the valve element; and a driving means which has a signal generation unit for generating a signal composed of a pre-pulse and a main pulse, and drives the opening of the valve element by applying driving voltage to the piezoelectric element with the signal generated by the signal generation unit as an input signal to a driving circuit to extend the piezoelectric element.

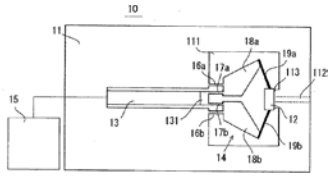

No. of Pages : 45 No. of Claims : 5

(12) PATENT APPLICATION PUBLICATION
(21) Application No.2806/KOLNP/2014 A
(19) INDIA
(22) Date of filing of Application :04/12/2014
(43) Publication Date : 08/05/2015

(54) Title of the invention : TRANSCUTANEOUS IMPLANT TOOLS, SYSTEMS AND METHODS

(51) International classification :A61M37/00
(31) Priority Document No :13/487,284
(32) Priority Date :04/06/2012
(33) Name of priority country :U.S.A.
(86) International Application No :PCT/US2013/035875
Filing Date :10/04/2013
(87) International Publication No :WO 2013/184235
(61) Patent of Addition to Application Number :NA
Filing Date :NA
(62) Divisional to Application Number :NA
Filing Date :NA

(71)**Name of Applicant :**
1)MEDTRONIC, INC.
Address of Applicant :710 MEDTRONIC PARKWAY NE., MINNEAPOLIS, MINNESOTA 55432 U.S.A.
(72)**Name of Inventor :**
1)VANDERPOOL, MATTHEW, T

(57) Abstract :
A transcutaneous implant tool is used to push a medical element through an incision and into a patients subcutaneous tissue, while a fin of the tool is engaged beneath the patients skin at the incision site. The tool preferably includes an injection rod for moving the medical element out through an opening of a bore of the tool. The fin, which is located in proximity to the opening, preferably includes a distalfacing surface that extends proximally from the opening at an acute angle with respect to a longitudinal axis of the bore; and the injection rod preferably includes a distal surface that is approximately coplanar with the distal-facing surface of the fin, when the distal surface of the rod is located in proximity to the opening of the bore.

No. of Pages : 21 No. of Claims : 12

(12) PATENT APPLICATION PUBLICATION
(21) Application No.2822/KOLNP/2014 A
(19) INDIA
(22) Date of filing of Application :05/12/2014
(43) Publication Date : 08/05/2015

(54) Title of the invention : METHOD OF SHAPING HAIR USING FATTY BODIES, NON-SILICONE POLYMERS OR SURFACTANTS

(51) International classification :A45D7/06,A61K8/18
(31) Priority Document No :1255307
(32) Priority Date :07/06/2012
(33) Name of priority country :France
(86) International Application No :PCT/IB2013/054655
Filing Date :06/06/2013
(87) International Publication No :WO 2013/183021
(61) Patent of Addition to Application Number :NA
Filing Date :NA
(62) Divisional to Application Number :NA
Filing Date :NA

(71)**Name of Applicant :**
1)L'OREAL
Address of Applicant :14 rue Royale, F-75008 Paris France
(72)**Name of Inventor :**
1)VIC, Gabin
2)CHAISY, Maryse
3)NUZZO, Stefania

(57) Abstract :
The invention concerns a method for the cosmetic treatment of keratin fibres preferably hair comprising at least the steps consisting of: ·a) applying to said keratin fibres a composition containing at least one substance chosen from fatty bodies non silicone polymers and surfactants · b) applying a mechanical tension to said keratin fibres and ·c) exposing said keratin fibres under mechanical tension to microwaves at a pressure ranging from 50 000 to 250 000 Pa in the presence of at least one solvent in vapour form in contact with the keratin fibres and without the keratin fibres completely drying out during the entire exposure to microwaves · the solvent or solvents in vapour form being generated entirely by the evaporation of at least one compound present before the microwaves are emitted in contact with the keratin fibres · step a) taking place prior to step c).

No. of Pages : 78 No. of Claims : 18

(12) PATENT APPLICATION PUBLICATION
(19) INDIA
(22) Date of filing of Application :05/12/2014
(21) Application No.2823/KOLNP/2014 A
(43) Publication Date : 08/05/2015

(54) Title of the invention : CHO EXPRESSION SYSTEM

(51) International classification :C12N15/69,C12N15/79
(31) Priority Document No :12305677.2
(32) Priority Date :14/06/2012
(33) Name of priority country :EPO
(86) International Application No :PCT/EP2013/062400
Filing Date :14/06/2013
(87) International Publication No :WO 2013/186371
(61) Patent of Addition to Application Number :NA
Filing Date :NA
(62) Divisional to Application Number :NA
Filing Date :NA

(71)**Name of Applicant :**
1)SANOFI
Address of Applicant :54 rue La Boétie, F-75008 Paris France
(72)**Name of Inventor :**
1)DEVAUD, Catherine
2)DUMAS, Bruno
3)LOUNIS, Nabil

(57) Abstract :
The present invention is within the field of industrial protein production. The inventors have designed and constructed a new expression system comprising an expression vector coding for a glutamine synthetase of human or dog origin and a CHO cell line. More specifically the invention pertains to a combination of (i) a DNA vector suitable for production of a recombinant protein wherein said vector comprises a sequence coding for a glutamine synthetase and (ii) a Chinese Hamster Ovary (CHO) cell line wherein said GS comprises a sequence at least 94.5 % identical to the sequence of SEQ ID NO: 1 or to the sequence of SEQ ID NO: 2.

No. of Pages : 43 No. of Claims : 29

(12) PATENT APPLICATION PUBLICATION
(21) Application No.2824/KOLNP/2014 A
(19) INDIA
(22) Date of filing of Application :05/12/2014
(43) Publication Date : 08/05/2015

(54) Title of the invention : METHOD AND APPARATUS FOR WIRELESS CHARGING OF A BIOELECTRONIC DEVICE IMPLANTED IN A LABORATORY ANIMAL OR IN A HUMAN BEING

(51) International classification :A01K1/03,A01K11/00,A61B5/00
(31) Priority Document No :MI2012A001049
(32) Priority Date :18/06/2012
(33) Name of priority country :Italy
(86) International Application No :PCT/IB2013/055009
Filing Date :18/06/2013
(87) International Publication No :WO 2013/190471
(61) Patent of Addition to Application Number :NA
Filing Date :NA
(62) Divisional to Application Number :NA
Filing Date :NA

(71)**Name of Applicant :**
1)AB MEDICA S.P.A.
Address of Applicant :Piazza Sant'Agostino 24, I-20123 Milano MI Italy
(72)**Name of Inventor :**
1)ROMANELLI, Pantaleo
2)PARIS, Antonino
3)MARCHETTI, Stefano

(57) Abstract :
The invention relates to an apparatus for charging a remote feedable circuit bioelectronic implanted in a patient or in a laboratory animal said apparatus comprising a composable container (10) configured to define a closed environment suitable to receive a patient or a laboratory animal said container (10) comprising a plurality of composable walls made of a nonmagnetic material and connected to each other so as to define said closed environment said container (10) comprising at least one first winding (20 21 22) whose axis is arranged in a first direction (Z) and at least one second winding (30 31 32 33) whose axis is arranged in a second direction (Y) perpendicular to said first direction (Z). The apparatus further comprises a system (40) for powering and driving the windings of the composable container (10) said system comprising a switching power driver (61 62 63 64 65 66 67) for each winding (20 21 22 30 31 32 33) a plurality of phase locked loop circuits (71 72 73 74 75 76 77) respectively connected to each switching power driver (61 62 63 64 65 66 67) and connected to a programmable logic circuit (80) of the powering and driving system (40) said programmable logic circuit (80) being configured to perform a phase comparison the programmable logic circuit (80) being in turn connected to a microprocessor (50) of the powering and driving system (40) said microprocessor being configured to provide driving signals to the windings (20 21 22 30 31 32 33) for generating inside the container (10) a rotating magnetic field.

No. of Pages : 22 No. of Claims : 13

(12) PATENT APPLICATION PUBLICATION
(21) Application No.2632/KOLNP/2014 A
(19) INDIA
(22) Date of filing of Application :18/11/2014
(43) Publication Date : 08/05/2015

(54) Title of the invention : DUMMY MEMORY ERASING OR PROGRAMMING METHOD HAVING PROTECTION AGAINST DETECTION

(51) International classification :G11C16/22,G11C16/34
(31) Priority Document No :1201940
(32) Priority Date :09/07/2012
(33) Name of priority country :France
(86) International Application No :PCT/FR2013/051519
Filing Date :28/06/2013
(87) International Publication No :WO 2014/009627
(61) Patent of Addition to Application Number :NA
Filing Date :NA
(62) Divisional to Application Number :NA
Filing Date :NA

(71)**Name of Applicant :**
1)INSIDE SECURE
Address of Applicant :Rue de la Carrière de Bachasson, CS 70025, ArteparcBachassonBt. A, F-13590 Meyreuil France
(72)**Name of Inventor :**
1)MERANDAT, Marc

(57) Abstract :
The present invention relates to a method for programming or erasing memory cells of a nonvolatile memory, including a first erasing or programming cycle including the steps involving i) applying (S11) at least one erasing or programming pulse (Np) to the first memory cells, ii) determining (S14) the state, erased or programmed, of the memory cells, and repeating the steps i) and ii) if the memory cells are not in the desired state, and a second erasing or programming cycle including the application of a predetermined number of erasing or programming pulses to the second memory cells.

No. of Pages : 26 No. of Claims : 15

(12) PATENT APPLICATION PUBLICATION
(19) INDIA
(22) Date of filing of Application :18/11/2014
(21) Application No.2633/KOLNP/2014 A
(43) Publication Date : 08/05/2015

(54) Title of the invention : MULTI-CHANNEL CUSTOMER IDENTIFICATION

(51) International classification :G06Q30/00
(31) Priority Document No :61/649,190
(32) Priority Date :18/05/2012
(33) Name of priority country :U.S.A.
(86) International Application No :PCT/US2013/041833
Filing Date :20/05/2013
(87) International Publication No :WO 2013/173831
(61) Patent of Addition to Application Number :NA
Filing Date :NA
(62) Divisional to Application Number :NA
Filing Date :NA

(71)**Name of Applicant :**
1)24/7 CUSTOMER, INC.
Address of Applicant :910 E. Hamilton Ave. Ste. 240, Campbell, CA 95008-0610 U.S.A.
(72)**Name of Inventor :**
1)CHANG, Andrew
2)REED, Dan
3)NGUYEN, Quang
4)MITRA, A., Kranthi

(57) Abstract :
Unique customer identification and behavior is linked between either concurrent or sequential channels of engagement. Unique identifiers are created, captured, and/or passed between these multiple contact channels, e.g. Web, mobile, IVR, phone, automotive, television, to identify and tag the customer and their context, e.g. history, pass behavior, steps progressed, obstacles and/or issues encountered, etc., uniquely.

No. of Pages : 31 No. of Claims : 20

(12) PATENT APPLICATION PUBLICATION
(19) INDIA
(22) Date of filing of Application :08/12/2014

(21) Application No.2847/KOLNP/2014 A
(43) Publication Date : 08/05/2015

(54) Title of the invention : CUMULATIVE MEASUREMENT OF AN ANALYTE

(51) International classification :A61B 5/145
(31) Priority Document No :1208950.4
(32) Priority Date :21/05/2012
(33) Name of priority country :U.K.
(86) International Application No :PCT/GB2013/051322
Filing Date :21/05/2013
(87) International Publication No :WO 2013/175196
(61) Patent of Addition to Application Number :NA
Filing Date :NA
(62) Divisional to Application Number :NA
Filing Date :NA

(71)**Name of Applicant :**
1)DERMAL DIAGNOSTICS LIMITED
Address of Applicant :LOUGHBOROUGH INNOVATION CENTRE HOLYWELL PARK ASHBY ROADLOUGHBOROUGHLE11 3AQ U.K.
(72)**Name of Inventor :**
1)CHOWDHURY, DEWAN FAZLUL HOQUE

(57) Abstract :
A method of monitoring the level of an analyte such as glucose in a subject comprises repeated steps of extracting a quantity of the analyte from the subject into a sample, for example using reverse iontophoresis, then measuring the concentration of the analyte with a method that depletes the analyte. Whereas known methods aim to deplete the analyte fully between extraction steps, the present method allows the concentration to build up with each cycle and measures successive changes in concentration. The higher concentrations present permit more reliable measurements to be made. The sample may be primed with an initial quantity of the analyte.

No. of Pages : 17 No. of Claims : 15

(12) PATENT APPLICATION PUBLICATION
(21) Application No.2848/KOLNP/2014 A
(19) INDIA
(22) Date of filing of Application :08/12/2014
(43) Publication Date : 08/05/2015

(54) Title of the invention : SOLVENT EXTRACTION SETTLER ARRANGEMENT

(51) International classification :C22B 3/02
(31) Priority Document No :20125717
(32) Priority Date :26/06/2012
(33) Name of priority country :Finland
(86) International Application No :PCT/FI2013/050640
Filing Date :12/06/2013
(87) International Publication No :WO 2014/001622
(61) Patent of Addition to Application Number :NA
Filing Date :NA
(62) Divisional to Application Number :NA
Filing Date :NA

(71)**Name of Applicant :**
1)OUTOTEC (FINLAND) OY
Address of Applicant :RAUHALANPUISTO 9 FI-02230 ESPOO Finland
(72)**Name of Inventor :**
1)VAARNO, JUSSI
2)SAARIO RAMI
3)FREDRIKSSON, HENRI

(57) Abstract :
A solvent extraction settler arrangement comprises a settler (1) having a feed end (2) and a discharge end (3), said settler being arranged to separate solution phases from a dispersion fed from the feed end while the dispersion flows to the discharge end. Elongated discharge launders (4, 5) are arranged at the discharge end (3) of the settler for each solution phase to be separated from the dispersion, each discharge launder (4, 5) including a first end (6), an outlet (7, 8) arranged at the first end, and a closed second end (9). At least one of the discharge launders (4, 5) has a form of a conical tube with a cross-section converging from the first end (6) towards the second end (9) and an inclined bottom (10, 11) descending from the second end (9) towards the first end (6).

No. of Pages : 18 No. of Claims : 11

(12) PATENT APPLICATION PUBLICATION
(19) INDIA
(22) Date of filing of Application :08/12/2014
(21) Application No.2849/KOLNP/2014 A
(43) Publication Date : 08/05/2015

(54) Title of the invention : HEAT EXCHANGER HAVING ENHANCED CORROSION RESISTANCE

(51) International classification :F28F 19/02
(31) Priority Document No :NA
(32) Priority Date :NA
(33) Name of priority country :NA
(86) International Application No :PCT/IB2012/052479
Filing Date :16/05/2012
(87) International Publication No :WO 2013/171547
(61) Patent of Addition to Application Number :NA
Filing Date :NA
(62) Divisional to Application Number :NA
Filing Date :NA

(71)**Name of Applicant :**
1)BABCOCK & WILCOX VØLUND A/S
Address of Applicant :FALKEVEJ 2, DK-6705 ESBJERG DENMARK
(72)**Name of Inventor :**
1)MIKKELSEN, LARS

(57) Abstract :
The present invention provides a heat exchanger (32) for heating a fluid (26) in an incineration plant (2), the incineration plant (2) in operation producing a flue gas (34), the heat exchanger comprising at least one heat exchanger component (40) comprising a wall having a first side (46) in contact with the fluid (26), and a second side (48) in contact with the flue gas (34), the second side (48) being provided with a protective oxide (50) for protecting the heat exchanger component (40) against corrosion caused by corrosive compounds entrained or comprised by the flue gas (34), wherein the protective oxide (50) comprises α-AI2O3. A method of forming a scale (50) for protecting a heat exchanger component (40) against corrosion caused by corrosive compounds entrained or comprised by a flue gas (34) is also provided.

No. of Pages : 18 No. of Claims : 16

(12) PATENT APPLICATION PUBLICATION
(19) INDIA
(22) Date of filing of Application :30/10/2014
(21) Application No.2432/KOLNP/2014 A
(43) Publication Date : 08/05/2015

(54) Title of the invention : TIE-BREAKING IN SHORTEST PATH DETERMINATION

(51) International classification :H04L12/56
(31) Priority Document No :NA
(32) Priority Date :NA
(33) Name of priority country :NA
(86) International Application No :PCT/CA2012/050337
Filing Date :22/05/2012
(87) International Publication No :WO 2013/173900
(61) Patent of Addition to Application Number :NA
Filing Date :NA
(62) Divisional to Application Number :NA
Filing Date :NA

(71)**Name of Applicant :**
1)ROCKSTAR BIDCO LP
Address of Applicant :1285 Avenue of the Americas, New York, New York10019-6064 U.S.A.
(72)**Name of Inventor :**
1)CHIABAUT, Jerome

(57) Abstract :
A consistent tie-breaking decision between equal-cost shortest (lowest cost) paths is achieved by comparing an ordered set of node identifiers for each of a plurality of end- to-end paths. Alternatively, the same results can be achieved, on-the-fly, as a shortest path tree is constructed, by making a selection of an equal-cost path using the node identifiers of the diverging branches of the tree. Both variants allow a consistent selection to be made of equal-cost paths, regardless of where in the network the shortest paths are calculated. This ensures that traffic flow between any two nodes, in both the forward and reverse directions, will always follow the same path through the network.

No. of Pages : 47 No. of Claims : 20

(12) PATENT APPLICATION PUBLICATION
(19) INDIA
(22) Date of filing of Application :31/10/2014
(21) Application No.2437/KOLNP/2014 A
(43) Publication Date : 08/05/2015

(54) Title of the invention : MEDICAMENT DELIVERY DEVICE

(51) International classification :A61M5/315
(31) Priority Document No :1250382-7
(32) Priority Date :17/04/2012
(33) Name of priority country :Sweden
(86) International Application No :PCT/EP2013/057376
Filing Date :09/04/2013
(87) International Publication No :WO 2013/156345
(61) Patent of Addition to Application Number :NA
Filing Date :NA
(62) Divisional to Application Number :NA
Filing Date :NA

(71)**Name of Applicant :**
1)CAREBAY EUROPE LTD
Address of Applicant :Suite 3, Tower Business Centre, Tower Street,Swatar, BKR 4013 Malta
(72)**Name of Inventor :**
1)WIESELBLAD, Anders

(57) Abstract :
The present invention relates to a medicament delivery device, comprising a housing (10) having a proximal end (11) and a distal end (12); a hollow piston plunger (20) being arranged within the housing (10); a telescopic dose drum (40) being concentrically arranged between the housing (10) and the piston plunger (20), piston plunger driving means for driving the hollow piston plunger towards the proximal end, comprising a hollow drive drum sleeve (30) being movable arranged within the hollow piston plunger (20) and being fixedly connected to the telescopic dose drum (40), wherein the hollow drive drum sleeve (30) and the hollow piston plunger (20) are coupleable to each other; actuation means operably connected to said hollow drive drum sleeve, wherein the hollow drive drum sleeve (30) and the hollow piston plunger (20) are operationally coupled such that axial movement of the actuation means towards the proximal end forces the hollow drive drum sleeve (30) and the hollow piston plunger (20) to couple together whereby the hollow piston plunger (20) and the telescopic dose drum (40) are displaced towards the proximal end for delivering the set dose. The invention is characterized in that the device further comprises a stop body (26) for inhibiting rotation of the telescopic dose drum (40) and the drive drum sleeve (30) when the set dose equals the remaining dose in the medicament container.

No. of Pages : 32 No. of Claims : 11

(12) PATENT APPLICATION PUBLICATION
(19) INDIA
(22) Date of filing of Application :08/12/2014
(21) Application No.2852/KOLNP/2014 A
(43) Publication Date : 08/05/2015

(54) Title of the invention : TRAVEL ADVISORY NOTIFICATIONS

(51) International classification :G06Q10/02
(31) Priority Document No :13/495,936
(32) Priority Date :13/06/2012
(33) Name of priority country :U.S.A.
(86) International Application No :PCT/US2013/045270
Filing Date :11/06/2013
(87) International Publication No :WO 2013/188466
(61) Patent of Addition to Application Number :NA
Filing Date :NA
(62) Divisional to Application Number :NA
Filing Date :NA

(71)**Name of Applicant :**
1)EXPEDIA, INC.
Address of Applicant :333 - 108th Avenue, N.E., Bellevue, Washington 98004 U.S.A.
(72)**Name of Inventor :**
1)FAN, Angus Yee-Jen
2)WYNN, Bruce Alan

(57) Abstract :
A travel advisory generation system is provided that enables generation of travel advisories based upon one or more selected parameters (e.g., location, origin, destination, date, date range, travel provider, class of service, etc.). These travel advisories may be further incorporated into travel search results, providing relevant advisory information in conjunction, e.g., concurrently or in-line, with travel options. The advisories may be further customized in order to display desired notifications and not display undesired notifications to selected users of the travel advisory generation system (e.g., system operators, travel service providers (including, but not limited to, travel agents and travel managers of an organization), and travelers).

No. of Pages : 38 No. of Claims : 15

(12) PATENT APPLICATION PUBLICATION
(19) INDIA
(22) Date of filing of Application :08/12/2014
(21) Application No.2853/KOLNP/2014 A
(43) Publication Date : 08/05/2015

(54) Title of the invention : IMPROVEMENTS IN FLUID BEARINGS

(51) International classification :F16C 32/06
(31) Priority Document No :2012902770
(32) Priority Date :28/06/2012
(33) Name of priority country :Australia
(86) International Application No :PCT/IB2013/055305
Filing Date :28/06/2013
(87) International Publication No :WO 2014/002060
(61) Patent of Addition to Application Number :NA
Filing Date :NA
(62) Divisional to Application Number :NA
Filing Date :NA

(71)**Name of Applicant :**
1)OUTOTEC(FINLAND)OY
Address of Applicant :RAUHALANPUISTO 9 FI-02230 ESPOO, Finland
(72)**Name of Inventor :**
1)BRAITHWAITE,DANIEL
2)BELKE, JEFFREY, VICTOR
3)GREEN, NICHOLAS JOHN
4)TATE, CHRIS
5)HARRISON, OSCAR
6)VAAGE, KUNT

(57) Abstract :
The present invention provides improvements to a fluid bearing (11, 12) for a journal (4), one being a polymer bearing pad (17) comprising an outer surface (13), at least one recess (18) for receiving lubricating fluid from a base (14) of said fluid bearing and distributing said lubricating fluid to said outer surface and a mounting means (8, 8A) for securely mounting said polymer bearing pad to said base. Other improvements include a fluid bearing (11, 12) comprising the polymer bearing pad (17), methods of making the polymer bearing pad and fluid bearing, a fluid bearing comprising a polymer bearing pad (17) having a chamfer (37) and a multidirectional fluid bearing (70).

No. of Pages : 48 No. of Claims : 32

(12) PATENT APPLICATION PUBLICATION
(19) INDIA
(22) Date of filing of Application :20/11/2014
(21) Application No.2654/KOLNP/2014 A
(43) Publication Date : 08/05/2015

(54) Title of the invention : IMAGE PROCESSING METHOD AND IMAGE PROCESSING APPARATUS

(51) International classification :B41J2/32,B41J3/01,B41M5/28
(31) Priority Document No :2012-117678
(32) Priority Date :23/05/2012
(33) Name of priority country :Japan
(86) International Application No :PCT/JP2013/064421
Filing Date :17/05/2013
(87) International Publication No :WO 2013/176236
(61) Patent of Addition to Application Number :NA
Filing Date :NA
(62) Divisional to Application Number :NA
Filing Date :NA

(71)**Name of Applicant :**
1)RICOH COMPANY, LTD.
Address of Applicant :3-6, Nakamagome 1-chome, Ohta-ku, Tokyo 1438555 Japan
(72)**Name of Inventor :**
1)ASAI, Toshiaki
2)YAMAMOTO, Kazutaka
3)ISHIMI, Tomomi
4)HOTTA, Yoshihiko

(57) Abstract :
To provide an image processing method, including: image recording, wherein an image composed of a plurality of laser drawn lines is recorded by heating by irradiating parallel laser lights on a recording medium spaced by a predetermined distance, wherein, in the image recording, among the plurality of laser drawn lines constituting the image, at least two units of lines drawn with different energy, each composed of a pair of laser drawn lines adjacent to each other and with different irradiation energy, are formed.

No. of Pages : 103 No. of Claims : 10

(12) PATENT APPLICATION PUBLICATION
(19) INDIA
(22) Date of filing of Application :09/12/2014
(21) Application No.2873/KOLNP/2014 A
(43) Publication Date : 08/05/2015

(54) Title of the invention : OVERHEAD LINE TENSION BALANCER

(51) International classification :B60M1/26
(31) Priority Document No :2012-210385
(32) Priority Date :25/09/2012
(33) Name of priority country :Japan
(86) International Application No :PCT/JP2013/072261
Filing Date :21/08/2013
(87) International Publication No :WO 2014/050374
(61) Patent of Addition to Application Number :NA
Filing Date :NA
(62) Divisional to Application Number :NA
Filing Date :NA

(71)**Name of Applicant :**
1)NHK SPRING CO., LTD.
Address of Applicant :10, Fukuura 3-chome Kanazawa-ku, Yokohama-shi, Kanagawa 2360004 Japan
(72)**Name of Inventor :**
1)KIMURA, Toru
2)SASA, Osamu

(57) Abstract :
An overhead line tension balancer is configured so that an inner tube which is connected to an overhead line does not rotate, so that a rotation preventive function is not impaired even if the stroke of the overhead line is long, and so that the manufacturing step of the overhead line tension balancer is not complex. A retaining plate (113) is provided within an inner tube (108). The retaining plate (113) is provided with an opening through which a long plate (115) can move relative to the opening in a state in which the opening cannot rotate relative to the retaining plate (113) and in which the long plate (115) penetrates through the opening. The long plate (115) comprises two L-shaped long plate pieces having bent front ends. The bent portions serve as engagement sections (115a) which prevent the retaining plate (113) from coming off the long plate (115). The two long plate sections can individually engage with the retaining plate (113), and as a result, manufacturing is simplified.

No. of Pages : 37 No. of Claims : 5

(12) PATENT APPLICATION PUBLICATION
(19) INDIA
(22) Date of filing of Application :09/12/2014
(21) Application No.2875/KOLNP/2014 A
(43) Publication Date : 08/05/2015

(54) Title of the invention : MEDICAMENT CONTAINER RETAINING MECHANISM

(51) International classification :A61M5/24,A61M5/31
(31) Priority Document No :1250551-7
(32) Priority Date :29/05/2012
(33) Name of priority country :Sweden
(86) International Application No :PCT/EP2013/060444
Filing Date :22/05/2013
(87) International Publication No :WO 2013/178511
(61) Patent of Addition to Application Number :NA
Filing Date :NA
(62) Divisional to Application Number :NA
Filing Date :NA

(71)**Name of Applicant :**
1)CAREBAY EUROPE LTD
Address of Applicant :Suite 3, Tower Business Centre, Tower Street, Swatar, BKR 4013 Malta
(72)**Name of Inventor :**
1)LÖÖF, Stefan
2)YMAN, Niclas

(57) Abstract :
The present invention relates to a medicament container retaining mechanism (34) for a medicament delivery device (10) comprising at least one flexible retaining member (36) arranged to a first housing part (12) of said medicament delivery device (10), which first housing part (12) is configured to receive a generally tubular medicament container (24) therein; and wherein said at least one flexible retaining member (36) is configured to interact with a rim(44) of said medicament container (22) received therein, whereby said at least one flexible retaining member (36) is configured to exert mainly longitudinally directed clamping forces to said rim (44) of said medicament container (22) to prevent movement in the generally longitudinal direction of said medicament container in said housing part (12).

No. of Pages : 17 No. of Claims : 7

(12) PATENT APPLICATION PUBLICATION
(19) INDIA
(22) Date of filing of Application :09/12/2014
(21) Application No.2876/KOLNP/2014 A
(43) Publication Date : 08/05/2015

(54) Title of the invention : METHOD OF MANUFACTURING A SEPARATION FENCE AND SEPARATION FENCE

(51) International classification :B29C39/04,B29C39/08,B29C33/06
(31) Priority Document No :20125716
(32) Priority Date :26/06/2012
(33) Name of priority country :Finland
(86) International Application No :PCT/FI2013/050636
Filing Date :12/06/2013
(87) International Publication No :WO 2014/001618
(61) Patent of Addition to Application Number :NA
Filing Date :NA
(62) Divisional to Application Number :NA
Filing Date :NA

(71)**Name of Applicant :**
1)OUTOTEC (FINLAND) OY
Address of Applicant :Rauhalanpuisto 9, FI-02230 Espoo Finland
(72)**Name of Inventor :**
1)SAARIO, Rami
2)FREDRIKSSON, Henri

(57) Abstract :
In a method for fabricating a separation fence (1) to be used in a hydrometallurgical liquid-liquid solvent extraction settler, the fence is manufactured of polymer resin. The fence (1) is manufactured as a shell-like integral piece by rotational moulding. The fence (1) is a rotationally moulded shell-like integral piece.

No. of Pages : 15 No. of Claims : 9

(12) PATENT APPLICATION PUBLICATION
(19) INDIA
(22) Date of filing of Application :10/12/2014

(21) Application No.2877/KOLNP/2014 A
(43) Publication Date : 08/05/2015

(54) Title of the invention : THERMOCHEMICALLY PRODUCED ETHANOL COMPOSITIONS

(51) International classification :C07C29/147,C07C29/149
(31) Priority Document No :13/835,157
(32) Priority Date :15/03/2013
(33) Name of priority country :U.S.A.
(86) International Application No :PCT/US2014/028034
Filing Date :14/03/2014
(87) International Publication No :WO 2014/143877
(61) Patent of Addition to Application Number :NA
Filing Date :NA
(62) Divisional to Application Number :NA
Filing Date :NA

(71)**Name of Applicant :**
1)CELANESE INTERNATIONAL CORPORATION
Address of Applicant :222 W. Las Colinas Blvd., Suite 900N, Irving, Texas75039, U.S.A.
(72)**Name of Inventor :**
1)Tatiana H. SONNENBERG
2)R. Jay WARNER
3)Heiko WEINER

(57) Abstract :
In one embodiment, the present invention is to an ethanol composition comprising at least 92 wt.% ethanol and from 20 wppm to 94 wppm isopropanol. The composition may be free of methanol and acetaldehyde.

No. of Pages : 47 No. of Claims : 15

(12) PATENT APPLICATION PUBLICATION
(21) Application No.2767/KOLNP/2014 A
(19) INDIA
(22) Date of filing of Application :01/12/2014
(43) Publication Date : 08/05/2015

(54) Title of the invention : RADIO BASE STATION APPARATUS, MOBILE TERMINAL APPARATUS AND WIRLESS COMMUNICATION METHOD

(51) International classification :H04N72/14
(31) Priority Document No :2010-225227
(32) Priority Date :04/10/2010
(33) Name of priority country :Japan
(86) International Application No :PCT/JP2011/072745
Filing Date :03/10/2011
(87) International Publication No :WO2012/046682
(61) Patent of Addition to Application Number :NA
Filing Date :NA
(62) Divisional to Application Number :
Filed on :01/01/1900

(71)**Name of Applicant :**
1)NTT DOCOMO, INC.
Address of Applicant :11-1, NAGATACHO 2-CHOME, CHIYODA-KU, TOKYO 1006150 Japan
(72)**Name of Inventor :**
1)NISHIKAWA, DAISUKE
2)TAKEDA, KAZUAKI
3)ABE, TETSUSHI
4)KISHIYAMA, YOSHIHISA

(57) Abstract :
A mobile terminal apparatus that transmits a periodic SRS (Sounding Reference Signal) and an aperiodic SRS, comprising: a receiving section configured to receive, in a downlink control channel, specific bit information selected from a bit information piece to indicate not to trigger the aperiodic SRS and a plurality of bit information pieces each to indicate to transmit the aperiodic SRS using a predetermined default SRS parameter; and an SRS transmission setting section configured to control transmission timing of the aperiodic SRS based on the specific bit information and control transmission timing of the periodic SRS in a predetermined period, wherein, when transmission of the aperiodic SRS and transmission of the periodic SRS occur in a same subframe, the SRS transmission setting section transmits the aperiodic SRS preferentially and does not transmit the periodic SRS.

No. of Pages : 81 No. of Claims : 6

(12) PATENT APPLICATION PUBLICATION
(21) Application No.2768/KOLNP/2014 A
(19) INDIA
(22) Date of filing of Application :01/12/2014
(43) Publication Date : 08/05/2015

(54) Title of the invention : SPHERICAL JOINT FOR EXHAUST PIPES

(51) International classification :F16L27/06,F01N13/08
(31) Priority Document No :2012-148954
(32) Priority Date :02/07/2012
(33) Name of priority country :Japan
(86) International Application No :PCT/JP2013/003210
Filing Date :20/05/2013
(87) International Publication No :WO 2014/006811
(61) Patent of Addition to Application Number :NA
Filing Date :NA
(62) Divisional to Application Number :NA
Filing Date :NA

(71)**Name of Applicant :**
1)OILES CORPORATION
Address of Applicant :6-34, Kounan 1-chome, Minato-ku, Tokyo 1080075 Japan
(72)**Name of Inventor :**
1)ARIGAYA, Hideto
2)KAIDA, Hidetoshi
3)SUEMATSU, Tsuyoshi

(57) Abstract :
A spherical joint (1) for exhaust pipes is provided with an outer case (6), an inner case (8), a seal body (13) which faces both the inner peripheral surface(9)of the outer case (6) and the outer peripheral surface (11) of the inner case (8), a seal body (16) which faces both the inner peripheral surface (9) of the outer case (6) and the outer peripheral surface (11) of the inner case (8), and a wave spring (17) which is provided between the outer case (6) and the inner case (8) and which elastically presses the seal bodies (13, 16) in the X-direction toward one of the outer case (6) and the inner case (8).

No. of Pages : 44 No. of Claims : 22

(12) PATENT APPLICATION PUBLICATION
(19) INDIA
(22) Date of filing of Application :01/12/2014
(21) Application No.2769/KOLNP/2014 A
(43) Publication Date : 08/05/2015

(54) Title of the invention : PEPTIDES DERIVED FROM VIRAL PROTEINS FOR USE AS IMMUNOGENS AND DOSAGE REACTANTS

(51) International classification :C07K7/08,C07K14/00,G01N33/68
(31) Priority Document No :61/656,256
(32) Priority Date :06/06/2012
(33) Name of priority country :U.S.A.
(86) International Application No :PCT/EP2013/061751
Filing Date :06/06/2013
(87) International Publication No :WO 2013/182661
(61) Patent of Addition to Application Number :NA
Filing Date :NA
(62) Divisional to Application Number :NA
Filing Date :NA

(71)**Name of Applicant :**
1)BIONOR IMMUNO AS
Address of Applicant :Klostergata 33, P.O. Box 2870, NO-3702 Skien Norway
(72)**Name of Inventor :**
1)SØRENSEN, Birger
2)ÖKVIST, Mats
3)HOVDEN, ArntOve
4)GRØNVOLD, Maja Sommerfelt

(57) Abstract :
The present invention relates to novel peptides and methods for treatment, diagnosis and prognosis of virus infections including infections with HCV, HIV, HPV, CMV and Influenza. The invention further relates to methods for identifying and providing peptides useful for the treatment and diagnosis.

No. of Pages : 141 No. of Claims : 101

(12) PATENT APPLICATION PUBLICATION
(21) Application No.2881/KOLNP/2014 A
(19) INDIA
(22) Date of filing of Application :10/12/2014
(43) Publication Date : 08/05/2015

(54) Title of the invention : OUTPUT MANAGEMENT DEVICE, OUTPUT MANAGEMENT SYSTEM, AND OUTPUT MANAGEMENT METHOD

(51) International classification	:G06F3/12,B41J29/38,B41J29/42
(31) Priority Document No	:2012-137286
(32) Priority Date	:18/06/2012
(33) Name of priority country	:Japan
(86) International Application No	:PCT/JP2013/066408
Filing Date	:07/06/2013
(87) International Publication No	:WO 2013/191087
(61) Patent of Addition to Application Number	:NA
Filing Date	:NA
(62) Divisional to Application Number	:NA
Filing Date	:NA

(71)**Name of Applicant :**
1)RICOH COMPANY, LIMITED
Address of Applicant :3-6, Nakamagome 1-chome, Ohta-ku, Tokyo, 1438555 Japan
(72)**Name of Inventor :**
1)TANAKA, Saki

(57) Abstract :
An output management device including: an acquiring unit that acquires a list of output data; a storage unit that stores sharing information of the data storage device; a first judgment unit that judges a state of a first output control device; a second judgment unit that judges the state of the second output control devices, when judged that the first output control device is not working and the data storage device is shared with the first and second output control device, and a setting unit that sets the output data possible to output when the first judgment unit judged that the first output control device is working or the second judgment unit judged that at least one of the second output control devices is working, and sets the output data impossible to output when the second judgment unit judged that all the second output control devices are not working.

No. of Pages : 29 No. of Claims : 10

(12) PATENT APPLICATION PUBLICATION
(19) INDIA
(22) Date of filing of Application :10/12/2014
(21) Application No.2882/KOLNP/2014 A
(43) Publication Date : 08/05/2015

(54) Title of the invention : NEURONAVIGATION-GUIDED FOCUSED ULTRASOUND SYSTEM AND METHOD THEREOF

(51) International classification :A61H1/00
(31) Priority Document No :201210190164.6
(32) Priority Date :08/06/2012
(33) Name of priority country :China
(86) International Application No :PCT/US2013/044647
Filing Date :07/06/2013
(87) International Publication No :WO 2013/184993
(61) Patent of Addition to Application Number :NA
Filing Date :NA
(62) Divisional to Application Number :NA
Filing Date :NA

(71)**Name of Applicant :**
1)CHANG GUNG UNIVERSITY
Address of Applicant :259 Wen-hwa1st Road, Kwei-shan, Tao-yuan Taiwan
2)DCB-USA LLC
(72)**Name of Inventor :**
1)LIU, Hao-Li
2)TSAI, Hong-Chieh
3)LU, Yu-Jen
4)WEI, Kou-Chen

(57) Abstract :
The present invention discloses a neuronavigation-guied focused ultrasound system and a method for the same, which are used to guide focused ultrasound energy to a target point. The system of the present invention comprises a focused ultrasound device, a neuronavigation system and a fixture. According to an image of an interested region of an individual, a focus point of the focused ultrasound device, and tracking points provided by the neuronavigation system, the neuronavigation system performs a calibration process and establishes a positional relationship between the focus point and the image of the interested region. Thereby, the neuronavigation system can recognize the focus point and guide focused ultrasound to the target point.

No. of Pages : 52 No. of Claims : 28

(12) PATENT APPLICATION PUBLICATION
(19) INDIA
(22) Date of filing of Application :03/11/2014
(21) Application No.2483/KOLNP/2014 A
(43) Publication Date : 08/05/2015

(54) Title of the invention : JET REGULATOR

(51) International classification :E03C1/084
(31) Priority Document No :20 2012 010 420.9
(32) Priority Date :02/11/2012
(33) Name of priority country :Germany
(86) International Application No :PCT/EP2013/002520
Filing Date :21/08/2013
(87) International Publication No :WO 2014/067594
(61) Patent of Addition to Application Number :NA
Filing Date :NA
(62) Divisional to Application Number :NA
Filing Date :NA

(71)**Name of Applicant :**
1)NEOPERL GMBH
Address of Applicant :Klosterrunsstrasse 11, 79379 Müllheim Germany
(72)**Name of Inventor :**
1)TEMPEL, Marc

(57) Abstract :
Disclosed is a jet regulator (100) comprising a jet regulator housing (2), in the housing interior of which a hole panel (5) is provided with a plurality of flow-through holes (6) for dividing the streaming water. The jet regulator described is characterised in that at least one flow-through hole (6) extends conically towards its outflow side in at least one outflow-side hole section. It is also possible for flow obstacles to be provided on the outflow side of the hole plate (5) in the jet regulator housing (2) and/or on the outflow front face of the jet regulator housing, which are arranged or concentrated there in a central or middle region and which deflect the streaming water into an outer annular zone. This jet regulator (100) enables an aerated and thereby sparkling-soft water jet to be generated even with low flow-through performances and low water pressures (cf. figure 12).

No. of Pages : 29 No. of Claims : 21

(12) PATENT APPLICATION PUBLICATION
(19) INDIA
(22) Date of filing of Application :03/11/2014
(21) Application No.2484/KOLNP/2014 A
(43) Publication Date : 08/05/2015

(54) Title of the invention : FABRIC FOR MAKING BAGS

(51) International classification :B32B5/26,B65D65/40
(31) Priority Document No :A 492/2012
(32) Priority Date :23/04/2012
(33) Name of priority country :Austria
(86) International Application No :PCT/AT2013/000060
Filing Date :09/04/2013
(87) International Publication No :WO 2013/159128
(61) Patent of Addition to Application Number :NA
Filing Date :NA
(62) Divisional to Application Number :NA
Filing Date :NA

(71)**Name of Applicant :**
1)BSW MACHINERY HANDELS-GMBH
Address of Applicant :Ledererhof 2, A-1010 Wien, Austria
(72)**Name of Inventor :**
1)SCHMALHOLZ, Peter

(57) Abstract :
In the case of a woven fabric (1) for the manufacture of bags consisting of polymeric tapes, more particularly polyolefin, polypropylene, polyethylene (HDPE) or polyethylene terephthalate tapes, which are preferably monoaxially oriented, the fabric being provided with a coating, the coating is formed by a nonwoven polymeric web, more particularly a polyolefin or polypropylene web (3).

No. of Pages : 14 No. of Claims : 14

(12) PATENT APPLICATION PUBLICATION
(19) INDIA
(22) Date of filing of Application :10/12/2014
(21) Application No.2879/KOLNP/2014 A
(43) Publication Date : 08/05/2015

(54) Title of the invention : METHOD OF MANUFACTURING A LAUNDER AND LAUNDER

(51) International classification :C22B3/02,C22B3/22,B01D11/04
(31) Priority Document No :20125712
(32) Priority Date :26/06/2012
(33) Name of priority country :Finland
(86) International Application No :PCT/FI2013/050639
Filing Date :12/06/2013
(87) International Publication No :WO 2014/001621
(61) Patent of Addition to Application Number :NA
Filing Date :NA
(62) Divisional to Application Number :NA
Filing Date :NA

(71)**Name of Applicant :**
1)OUTOTEC (FINLAND) OY
Address of Applicant :Rauhalanpuisto 9 FI-02230 Espoo Finland
(72)**Name of Inventor :**
1)VAARNO, Jussi
2)SAARIO, Rami
3)FREDRIKSSON, Henri

(57) Abstract :
A method of manufacturing a launder (1) to be used in co-operation with a solvent extraction settler (2) comprises manufacturing at the site of manufacture, such as in an engineering workshop, a plurality of self-supporting launder element modules (3), each having exterior dimensions, strength and handling and securing means (4) conforming to shipping container standards, transporting the launder element modules (3) to the site of installation as normal freight by transport equipment, such as trucks, trailers and container ships, capable of handling and transporting shipping container standard compatible units, and assembling at the site of installation the launder element modules (3) into a module group (5) forming a complete launder. The launder (1) comprises a launder module group (5) consisting of self-supporting launder element modules (3), each having exterior dimensions, strength and handling and securing means (4) conforming to shipping container standards to enable shipping container standard compatible transportability.

No. of Pages : 38 No. of Claims : 29

(12) PATENT APPLICATION PUBLICATION
(19) INDIA
(22) Date of filing of Application :10/12/2014
(21) Application No.2880/KOLNP/2014 A
(43) Publication Date : 08/05/2015

(54) Title of the invention : METHOD OF MANUFACTURING A SOLVENT EXTRACTION SETTLER AND SOLVENT EXTRACTION SETTLER

(51) International classification :C22B3/02,C22B3/22,B01D11/04
(31) Priority Document No :20125713
(32) Priority Date :26/06/2012
(33) Name of priority country :Finland
(86) International Application No :PCT/FI2013/050645
Filing Date :12/06/2013
(87) International Publication No :WO 2014/001625
(61) Patent of Addition to Application Number :NA
Filing Date :NA
(62) Divisional to Application Number :NA
Filing Date :NA

(71)**Name of Applicant :**
1)OUTOTEC (FINLAND) OY
Address of Applicant :Rauhalanpuisto 9 FI-02230 Espoo Finland
(72)**Name of Inventor :**
1)VAARNO, Jussi
2)SAARIO, Rami
3)FREDRIKSSON, Henri
4)PAJALA, Jussi

(57) Abstract :
A method of manufacturing a solvent extraction settler comprises manufacturing at the site of manufacture, such as in an engineering workshop, a plurality of self-supporting settler element modules (2, 3, 4, 5) each having exterior dimensions, strength and handling and securing means (6) conforming to shipping container standards, transporting the modules (2, 3, 4, 5) to the site of installation as normal freight by transport equipment, such as trucks, trailers and container ships, capable of handling and transporting shipping container standard compatible units, and assembling the modules (2, 3, 4, 5) into a complete settler at the site of installation. The settler comp- rises a module group (1) consisting of a plurality of self-supporting settler element modules (2, 3, 4, 5) each having exterior dimensions, strength and handling and securing means (6) conforming to ISO shipping container standards to enable ISO compatible transportability.

No. of Pages : 46 No. of Claims : 29

(12) PATENT APPLICATION PUBLICATION
(19) INDIA
(22) Date of filing of Application :10/12/2014
(21) Application No.2883/KOLNP/2014 A
(43) Publication Date : 08/05/2015

(54) Title of the invention : MEDICAMENT DELIVERY DEVICE

(51) International classification :A61M5/20,A61M5/315
(31) Priority Document No :1250567-3
(32) Priority Date :31/05/2012
(33) Name of priority country :Sweden
(86) International Application No :PCT/EP2013/060466
Filing Date :22/05/2013
(87) International Publication No :WO 2013/178512
(61) Patent of Addition to Application Number :NA
Filing Date :NA
(62) Divisional to Application Number :NA
Filing Date :NA

(71)**Name of Applicant :**
1)CAREBAY EUROPE LTD
Address of Applicant :Suite 3, Tower Business Centre, Tower Street, Swatar, BKR 4013 Malta
(72)**Name of Inventor :**
1)BRUNNBERG, Lennart
2)OLSON, Stephan

(57) Abstract :
A medicament delivery device wherein a drive mechanism comprises a first resilient member 91 and a delay plunger rod assembly; wherein the delay plunger rod assembly comprises a proximal plunger 96, a distal plunger 90, a chamber 95 formed between the proximal and the distal plungers, an aperture, and delay means contained within the chamber; the distal plunger being positioned and configured in relation to a hold and release mechanism such that, as the drive mechanism exerts a pressure on the medicament container, the distal plunger acts against the delay means whereby a release of a signal generating member is delayed after the release of the drive mechanism to allow remaining contents of medicament in a medicament container to be completely expelled before the signal generating member is released.

No. of Pages : 35 No. of Claims : 19

(12) PATENT APPLICATION PUBLICATION
(19) INDIA
(22) Date of filing of Application :10/12/2014
(21) Application No.2884/KOLNP/2014 A
(43) Publication Date : 08/05/2015

(54) Title of the invention : SOLVENT EXTRACTION SETTLER ARRANGEMENT

(51) International classification :C22B3/02,C22B3/20,B01D11/04
(31) Priority Document No :20125715
(32) Priority Date :26/06/2012
(33) Name of priority country :Finland
(86) International Application No :PCT/FI2013/050638
Filing Date :12/06/2013
(87) International Publication No :WO 2014/001620
(61) Patent of Addition to Application Number :NA
Filing Date :NA
(62) Divisional to Application Number :NA
Filing Date :NA

(71)**Name of Applicant :**
1)OUTOTEC (FINLAND) OY
Address of Applicant :Rauhalanpuisto 9, FI-02230 Espoo Finland
(72)**Name of Inventor :**
1)VAARNO, Jussi
2)SAARIO, Rami
3)FREDRIKSSON, Henri

(57) Abstract :
A solvent extraction settler arrangement comprising a mixing unit (1) for preparing a dispersion from mutually immiscible solutions and a settler (2) having a feed end (3) and a discharge end (4). The settler is arranged to separate solution phases from a dispersion fed from the feed end while the dispersion flows towards the discharge end. The arrangement further comprises a feeding device (5) located at the feed end (3) for feeding the dispersion prepared by the mixing unit (1) to the settler (2). The feeding device (5) comprises an elongated feed launder (6) having a first end (7) for receiving the dispersion from the mixing unit (1), and a second end (8). The feed launder (5) extends alongside the feed end (3) of the settler (2). The feed launder (5) has a form of a conical tube with a cross-section converging towards the second end (8) and an inclined bottom (9) ascending towards the second end (8). A plurality of feed pipes (10) are arranged along the length of the feed launder (6) at a distance from each other, each feed pipe (10) having a third end (11) opening to the inner space of the feed launder at the bottom (9) to receive the dispersion from the feed launder and a fourth end (12) opening to the settler (2) to conduct the dispersion to the settler.

No. of Pages : 16 No. of Claims : 7

(12) PATENT APPLICATION PUBLICATION
(19) INDIA
(22) Date of filing of Application :10/12/2014
(21) Application No.2885/KOLNP/2014 A
(43) Publication Date : 08/05/2015

(54) Title of the invention : GRAVITY TRANSDUCER AND APPLICATION TO HYDROCARBON EXPLORATION

(51) International classification :G01V3/15
(31) Priority Document No :61/650,413
(32) Priority Date :22/05/2012
(33) Name of priority country :U.S.A.
(86) International Application No :PCT/US2013/042315
Filing Date :22/05/2013
(87) International Publication No :WO 2013/177340
(61) Patent of Addition to Application Number :NA
Filing Date :NA
(62) Divisional to Application Number :NA
Filing Date :NA

(71)**Name of Applicant :**
1)NXT ENERGY SOLUTIONS, INC.
Address of Applicant :1400, 505 - 3rd Street, SW, Calgary, AlbertaT2P 3E6 Canada
2)FOREST, Carl A.
(72)**Name of Inventor :**
1)LISZICASZ, George
2)GUI, Xiang

(57) Abstract :
A gravity transducer includes a particle system characterized by internal vibrations relating to its de Broglie wave, a resonant cavity for trapping the particle without holding it in a lattice structure; a source of a phonon wave, wherein the de Broglie wave and the phonon wave interact over a junction area; a power source for applying electrical power across the junction; a sensing system for measuring resistance, voltage, or current across the junction and for producing a sensed signal; and a recording system for recording the sensed signal. The transducer is used in a method of detecting potential hydrocarbon deposits, the method comprising: providing the transducer for sensing a change in a spatial orientation of gravity; flying the gravity transducer across the hydrocarbon deposit; sensing a change in spatial orientation of gravity to produce a signal indicative of geologic subsurface features, generally associated with hydrocarbon deposit; and recording the signal.

No. of Pages : 57 No. of Claims : 40

(12) PATENT APPLICATION PUBLICATION
(19) INDIA
(22) Date of filing of Application :10/12/2014
(21) Application No.2886/KOLNP/2014 A
(43) Publication Date : 08/05/2015

(54) Title of the invention : HYDROXYLATED AND METHOXYLATED CYCLOPENTA [D] PYRIMIDINES AS AKT PROTEIN KINASE INHIBITORS

(51) International classification :C07D239/70
(31) Priority Document No :60/818, 718
(32) Priority Date :06/07/2006
(33) Name of priority country :U.S.A.
(86) International Application No :PCT/US2007/072885
Filing Date :05/07/2007
(87) International Publication No :WO2008/006040
(61) Patent of Addition to Application Number :NA
Filing Date :NA
(62) Divisional to Application Number :115/KOLNP/2009
Filed on :09/01/2009

(71)**Name of Applicant :**
1)ARRAY BIOPHARMA INC.
Address of Applicant :3200 WALNUT STREET BOULDER, COLORADO 80301 U.S.A.
2)GENENTECH, INC.
(72)**Name of Inventor :**
1)MITCHELL, IAN S.
2)BLAKE, JAMES F.
3)XU, RUI
4)KALLAN, NICHOLAS C.
5)XIAO, DENGMING
6)SPENCER, KEITH LEE
7)BENCSIK, JOSEF R.
8)LIANG, JUN
9)SAFINA, BRIAN
10)ZHANG, BIRONG
11)CHABOT, CHRISTINE
12)DO, STEVEN
13)WALLACE, ELI M.
14)BANKA, ANNA L.
15)SCHLACHTER, STEPHEN T.

(57) Abstract :
The present invention provides compounds, including resolved enantiomers, resolved diastereomers, solvates and pharmaceutically acceptable salts thereof, comprising the Formula (I). Also provided are methods of using the compounds of this invention as AKT protein kinase inhibitors and for the treatment of hyperproliferative diseases such as cancer.

No. of Pages : 216 No. of Claims : 42

(12) PATENT APPLICATION PUBLICATION
(19) INDIA
(22) Date of filing of Application :05/11/2014
(21) Application No.2508/KOLNP/2014 A
(43) Publication Date : 08/05/2015

(54) Title of the invention : HYBRID COACERVATE CAPSULES

(51) International classification	:A23L1/00,A23L1/22,A23L1/226
(31) Priority Document No	:12169278.4
(32) Priority Date	:24/05/2012
(33) Name of priority country	:EPO
(86) International Application No	:PCT/EP2013/060619
Filing Date	:23/05/2013
(87) International Publication No	:WO 2013/174921
(61) Patent of Addition to Application Number	:NA
Filing Date	:NA
(62) Divisional to Application Number	:NA
Filing Date	:NA

(71)**Name of Applicant :**
1)FIRMENICH SA
Address of Applicant :1, route des Jeunes, P.O. Box 239, CH-1211 Geneva 8 Switzerland
(72)**Name of Inventor :**
1)DARDELLE, Grégory
2)BEAUSSOUBRE, Pascal
3)ERNI, Philipp

(57) Abstract :
The invention relates to a process for preparing a hybrid coacervate capsule by mixing a first polymer with particles to form particle/polymer complexes; interacting a second polymer with the particle/polymer complexes to form a mixture comprising hybrid complex coacervates which contain particulate inclusions; and adding a core material to the mixture so that the hybrid complex coacervates deposit as a coating layer around the core material. The capsules form another embodiment of the invention.

No. of Pages : 29 No. of Claims : 18

(12) PATENT APPLICATION PUBLICATION
(19) INDIA
(22) Date of filing of Application :11/12/2014
(21) Application No.2892/KOLNP/2014 A
(43) Publication Date : 08/05/2015

(54) Title of the invention : METHOD OF OPERATING A FUEL CELL POWER SYSTEM

(51) International classification :H01M8/06,C01B3/38,H01M8/04
(31) Priority Document No :61/645,963
(32) Priority Date :11/05/2012
(33) Name of priority country :U.S.A.
(86) International Application No :PCT/US2013/029410
Filing Date :06/03/2013
(87) International Publication No :WO 2013/169329
(61) Patent of Addition to Application Number :NA
Filing Date :NA
(62) Divisional to Application Number :NA
Filing Date :NA

(71)**Name of Applicant :**
1)BALLARD POWER SYSTEMS INC.
Address of Applicant :9000 Glenlyon Parkway, Burnaby, British ColumbiaV5J 5J8 Canada
(72)**Name of Inventor :**
1)LYUBOVSKY, Maxim
2)BHARGAV, Atul
3)HABIBZADEH, Bahman

(57) Abstract :
A method of operating a fuel cell power system comprising: supplying a hydrocarbon fuel to a fuel processing system; supplying air and water to the fuel processing system; supplying a hydrogen rich reformate from the fuel processing system to a fuel cell stack; supplying an anode waste gas from the fuel cell stack to a burner; drawing a load from the at least one fuel cell stack; and detecting an operating temperature of the fuel reformer; wherein supplying air and water to the fuel processing system comprises adjusting an amount of air and water to be supplied based on the load drawn from the fuel cell stack; and supplying the hydrocarbon fuel to the fuel processing system comprises adjusting an amount of hydrocarbon fuel to be supplied based on the detected operating temperature of the fuel reformer.

No. of Pages : 40 No. of Claims : 11

(12) PATENT APPLICATION PUBLICATION
(19) INDIA
(22) Date of filing of Application :11/12/2014
(21) Application No.2893/KOLNP/2014 A
(43) Publication Date : 08/05/2015

(54) Title of the invention : STABILIZER COMPOSITIONS CONTAINING SUBSTITUTED CHROMAN COMPOUNDS AND METHODS OF USE

(51) International classification :C07D311/72,C08J3/00,C08K5/00
(31) Priority Document No :13/495,109
(32) Priority Date :13/06/2012
(33) Name of priority country :U.S.A.
(86) International Application No :PCT/US2013/045318
Filing Date :12/06/2013
(87) International Publication No :WO 2013/188490
(61) Patent of Addition to Application Number :NA
Filing Date :NA
(62) Divisional to Application Number :NA
Filing Date :NA

(71)**Name of Applicant :**
1)CYTEC TECHNOLOGY CORP.
Address of Applicant :300 Delaware Avenue, Wilmington, DE 19801 U.S.A.
(72)**Name of Inventor :**
1)GUPTA, Ram
2)SAMUELS, Sari-Beth
3)ENG., J., Mon Hei
4)STEELE, Thomas

(57) Abstract :
Stabilizer compositions having a chroman-based compound according to Formula (V): and their use in processes for stabilizing organic materials subject to degradation and/or discoloration due to the effects from light, oxygen and heat, and in processes for producing articles from organic materials blended therewith, are provided herein.

No. of Pages : 86 No. of Claims : 35

(12) PATENT APPLICATION PUBLICATION
(19) INDIA
(22) Date of filing of Application :11/12/2014
(21) Application No.2894/KOLNP/2014 A
(43) Publication Date : 08/05/2015

(54) Title of the invention : A CONSTRUCTION AND A TENSION ELEMENT COMPRISING A CABLE AND A PLURALITY OF STRAKES

(51) International classification :G08B13/196,G08B21/22,H04N7/18
(31) Priority Document No :12174090.6
(32) Priority Date :28/06/2012
(33) Name of priority country :EPO
(86) International Application No :PCT/EP2013/063655
Filing Date :26/06/2013
(87) International Publication No :WO 2014/012753
(61) Patent of Addition to Application Number :NA
Filing Date :NA
(62) Divisional to Application Number :NA
Filing Date :NA

(71)**Name of Applicant :**
1)DANMARKS TEKNISKE UNIVERSITET
Address of Applicant :ANKER ENGELUNDS VEJ 1 DK-2800 LYNGBY DENMARK
(72)**Name of Inventor :**
1)GEORGAKIS, CHRISTOS, THOMAS
2)KLEISSL, KENNETH

(57) Abstract :
The invention provides a construction comprising a structural element and at least one cable (100) arranged in tension to carry at least a part of the weight of the structural element. The cable defines an outer surface (102) onto which a plurality of strakes (104) form protrusions for reducing rain and wind induced vibrations. Each strake has a height being a distance from a strake root part connected to the outer surface of the cable and a strake end part terminating the strake outwards form the cable, a width being transverse to the height, and a length transverse to the height and width and along which length the strake is connected to the cable. The length of each strake is shorter than the circumference of the outer surface, and the height is less than 5 percent of the diameter of the cable.

No. of Pages : 19 No. of Claims : 11

(12) PATENT APPLICATION PUBLICATION
(19) INDIA
(22) Date of filing of Application :11/12/2014
(21) Application No.2895/KOLNP/2014 A
(43) Publication Date : 08/05/2015

(54) Title of the invention : SYSTEMS AND METHODS FOR FORWARDING TRAFFIC IN A CLUSTER NETWORK

(51) International classification :G06F9/50,H04L29/08,H04L29/12
(31) Priority Document No :13/524,709
(32) Priority Date :15/06/2012
(33) Name of priority country :U.S.A.
(86) International Application No :PCT/US2013/045645
Filing Date :13/06/2013
(87) International Publication No :WO 2013/188661
(61) Patent of Addition to Application Number :NA
Filing Date :NA
(62) Divisional to Application Number :NA
Filing Date :NA

(71)**Name of Applicant :**
1)CITRIX SYSTEMS INC.
Address of Applicant :851 West Cypress Creek Road, Fort Lauderdale, Florida 33309 U.S.A.
(72)**Name of Inventor :**
1)CHAUHAN, Abhishek
2)BOTS, Henk
3)GOPINATH, Sandhya

(57) Abstract :
The present invention is directed towards systems and methods for forwarding network packets in a cluster network. A predetermined identifier may be inserted into a Media Access Control (MAC) ID field of an Ethernet header of a packet to distinguish various types of traffic. Newly received packets may be identified due to the absence of the identifier. The identifier may be added to the source MAC ID field of the Ethernet header of the packet, and the packet may be distributed to cluster nodes for processing via an inter-node communication bus. Thus, received packets with the identifier in the source MAC ID field may be identified as steered for processing by an internal node of the cluster. After processing the packet, the internal node may transmit the processed packets via the inter-node bus with a destination MAC ID including the identifier. Accordingly, received packets with the identifier in the destination MAC ID field may be identified as processed and ready for forwarding to clients or servers.

No. of Pages : 107 No. of Claims : 20

(12) PATENT APPLICATION PUBLICATION
(21) Application No.2799/KOLNP/2014 A
(19) INDIA
(22) Date of filing of Application :03/12/2014
(43) Publication Date : 08/05/2015

(54) Title of the invention : HIGH-STRENGTH ELECTRIC-RESISTANCE-WELDED STEEL PIPE OF EXCELLENT LONG-TERM SOFTENING RESISTANCE IN INTERMEDIATE TEMPERATURE RANGES, AND METHOD FOR PRODUCING SAME

(51) International classification	:C22C38/00
(31) Priority Document No	:2012-145098
(32) Priority Date	:28/06/2012
(33) Name of priority country	:Japan
(86) International Application No	:PCT/JP2013/003764
Filing Date	:17/06/2013
(87) International Publication No	:WO 2014/002423
(61) Patent of Addition to Application Number	:NA
Filing Date	:NA
(62) Divisional to Application Number	:NA
Filing Date	:NA

(71)**Name of Applicant :**
1)JFE STEEL CORPORATION
Address of Applicant :2-3,UCHISAIWAI-CHO 2-CHOME, CHIYODA-KU, TOKYO 1000011, JAPAN
(72)**Name of Inventor :**
1)TOYODA,SHUNSUKE
2)GOTO, SOTA
3)OKABE,TAKATOSHI
4)INOUE, TOMOHIRO

(57) Abstract :
A high strength electric resistance welded steel pipe having a yield strength of 450 MPa or more and excellent resistance to softening for a long period in an intermediate temperature range and a method for manufacturing the steel pipe are provided. Specifically, a steel pipe is made using a common method for manufacturing an electric resistance welded steel pipe and made from a hot rolled steel sheet manufactured by heating and soaking a steel material having a chemical composition containing, by mass%, C: 0.026% or more and 0.084% or less, Si: 0.10% or more and 0.30% or less, Mn: 0.70% or more and 1.90% or less, Al: 0.01% or more and 0.10% or less, Nb: 0.001% or more and 0.070% or less, V: 0.001% or more and 0.065% or less, Ti: 0.001% or more and 0.033% or less, Ca: 0.0001% or more and 0.0035% or less, in which the condition that Pcm is 0.20 or less is satisfied, at a temperature of higher than 1200°C and 1280°C or lower for 90 minutes or more, by performing hot rolling under conditions such that the hot rolling reduction in an un- recrystallization temperature range is 20% or more, by cooling the hot rolled steel sheet, in terms of the temperature of a central portion in the thickness direction, down at an average cooling rate of 7°C/sec. or more and 299°C/sec. or less in a temperature range of 780°C to 620°C, by subsequently performing a heat treatment under conditions in which a cumulative holding time in a temperature range of 480°C to 350°C is 2 hours or more and 20 hours or less. Subsequently, an online heat treatment is performed under conditions such that the whole of the wall thickness is heated up to a temperature of 800°C or higher and 1150°C or lower and then cooled, in terms of the temperature of a central portion in the wall thickness direction, at an average cooling rate of 7°C/sec. or more and 299°C/sec. or less in a temperature range of 780°C to 620°C, and further subjected to a treatment in which a cumulative holding time in a temperature range of 500°C to 360°C is 2 seconds or more and 200 seconds or less.

No. of Pages : 89 No. of Claims : 8

(12) PATENT APPLICATION PUBLICATION
(21) Application No.2910/KOLNP/2014 A
(19) INDIA
(22) Date of filing of Application :12/12/2014
(43) Publication Date : 08/05/2015

(54) Title of the invention : HIGH CARBON STEEL PIPE HAVING EXCELLENT COLD WORKABILITY, MACHINABILITY, AND QUENCHING PROPERTIES, AND METHOD FOR MANUFACTURING SAME

(51) International classification :C22C38/00,C21D9/08,C22C38/06
(31) Priority Document No :NA
(32) Priority Date :NA
(33) Name of priority country :NA
(86) International Application No :PCT/JP2012/067138
Filing Date :28/06/2012
(87) International Publication No :WO 2014/002289
(61) Patent of Addition to Application Number :NA
Filing Date :NA
(62) Divisional to Application Number :NA
Filing Date :NA

(71)**Name of Applicant :**
1)JFE STEEL CORPORATION
Address of Applicant :2-3, Uchisaiwai-cho, 2-chome, Chiyoda-ku, Tokyo 1000011 JAPAN
(72)**Name of Inventor :**
1)ARATANI, Masatoshi
2)TOYODA, Shunsuke
3)OKABE, Takatoshi
4)KAWABATA, Yoshikazu
5)IWAZAKI, Kenichi

(57) Abstract :
Provided are a high carbon resistance-welded steel pipe having excellent cold workability machinability, and quenching properties; and a method for manufacturing the same. Specifically a high carbon steel pipe having a composition containing- by mass 0.25 to 0.60% of C 0.01 to 2.0% of Si, 0.2 to 3.0% of Mn, 0.001 to 0.1% of Al, 0.001 to 0.05% of P, 0.02% or less of S 0.0010 to 0.0100% of N, 0.0003 to 0.0050% of B and 0.0001 to 0.0050% of Ca, with the remainder made up by residual Fe and unavoidable impurities, is used as a material steel pipe. Heating and soaking is performed to Ac transformation point or above, and diameter reducing rolling is subsequently performed at a rolling finishing temperature of 900°C or above (Ac transformation point) and a cumulative diameter reduction ratio of 30 to 70% in a temperature range no greater than 900°C. This makes it possible to obtain, without performing spheroidizing annealing, a structure in which cementite particles having an average particle diameter (d) from 0.1 µm to less than 0.5 µm and in which the average distance (L) between the surfaces of adjacent cementite particles is 0.5 to 10 µm are dispersed in a ferrite phase. In particular machinability is significantly improved.

No. of Pages : 39 No. of Claims : 7

(12) PATENT APPLICATION PUBLICATION
(21) Application No.2697/KOLNP/2014 A
(19) INDIA
(22) Date of filing of Application :25/11/2014
(43) Publication Date : 08/05/2015

(54) Title of the invention : COOLING CONTROL DEVICE AND COOLING CONTROL METHOD FOR INTERNAL COMBUSTION ENGINE

(51) International classification :F01P7/16,F01P11/16
(31) Priority Document No :2012-110525
(32) Priority Date :14/05/2012
(33) Name of priority country :Japan
(86) International Application No :PCT/JP2013/003068
Filing Date :14/05/2013
(87) International Publication No :WO 2013/172017
(61) Patent of Addition to Application Number :NA
Filing Date :NA
(62) Divisional to Application Number :NA
Filing Date :NA

(71)**Name of Applicant :**
1)NISSAN MOTOR CO., LTD.
Address of Applicant :2, Takara-cho, Kanagawa-ku, Yokohama-shi, Kanagawa 221-0023, JAPAN
2)VALEO SYSTEMES THERMIQUES
(72)**Name of Inventor :**
1)Takayoshi ICHIHARA
2)Stephane PEYRAZAT

(57) Abstract :
In a cooling control device for an internal combustion engine according to the present invention, when the circuit switching means has a failure and fails in circuit switching of connecting an internal coolant passage in the internal combustion engine and a radiator circuit passing through the radiator to each other, a wax-type thermostat (30) provided in a branching passage (28), which is configured to send the coolant in the internal coolant passage to the radiator through the radiator circuit, works and opens the branching passage (28). Thus, the excessively-heated coolant in the internal coolant passage (4) flows to the radiator circuit, and accordingly, the overheating of the internal combustion engine is prevented.

No. of Pages : 22 No. of Claims : 3

(12) PATENT APPLICATION PUBLICATION
(19) INDIA
(22) Date of filing of Application :04/12/2014
(21) Application No.2805/KOLNP/2014 A
(43) Publication Date : 08/05/2015

(54) Title of the invention : RAIL CAR AND DOOR BAG COLUMN

(51) International classification :B61D 19/00
(31) Priority Document No :2012-133783
(32) Priority Date :13/06/2012
(33) Name of priority country :Japan
(86) International Application No :PCT/JP2013/003668
Filing Date :11/06/2013
(87) International Publication No :WO 2013/187051
(61) Patent of Addition to Application Number :NA
Filing Date :NA
(62) Divisional to Application Number :NA
Filing Date :NA

(71)**Name of Applicant :**
1)KAWASAKI JUKOGYO KABUSHIKI KAISHA
Address of Applicant :1-1,HIGASHIKAWASAKI-CHO 3-CHOME, CHUO-KU, KOBE-SHI, HYOGO 6508670 JAPAN
(72)**Name of Inventor :**
1)KAWAKAMI, NAOAKI
2)OKADA, SHINICHI
3)YOSHIDA, NAOHIRO
4)INABA, KAZUMASA
5)WAKI, KENJI

(57) Abstract :
A railcar (1) includes a side entrance peripheral member (7) and a side sliding door (3). The side entrance peripheral member (7) surrounds a side entrance (2). The side entrance peripheral member (7) includes a door pocket post (6) having a double skin structure in which an outer portion (61) and an inner portion (62) provided inwardly of the outer portion (61) in a car-width direction are coupled to each other by coupling portions (63). A peripheral portion of the side sliding door (3) is pressed against an edge portion, extending along the side entrance (2), of the side entrance peripheral member (7) via a rubber seal (4) at the time of a closed state of the side entrance (2). At the time of an open state of the side entrance (2), the side sliding door (3) is pulled into a door pocket space (10) facing the inner portion (62) of the door pocket post (6). A projecting portion (65) projecting inwardly in the car-width direction beyond the inner portion (62) and including a tip end that contacts the rubber seal (4) is provided at at least a part of a region constituted by an upper edge and lower edge of the edge portion of the side entrance peripheral member (7) and a lateral edge, located at the door pocket post side, of the edge portion of the side entrance peripheral member (7).

No. of Pages : 22 No. of Claims : 6

(12) PATENT APPLICATION PUBLICATION
(19) INDIA
(22) Date of filing of Application :12/12/2014
(21) Application No.2911/KOLNP/2014 A
(43) Publication Date : 08/05/2015

(54) Title of the invention : METHOD OF INSTALLING A MULTI-LAYER BATT, BLANKET OR MAT IN AN EXHAUST GAS AFTERTREATMENT OR ACOUSTIC DEVICE

(51) International classification :B01D39/00,B01D50/00
(31) Priority Document No :13/612,269
(32) Priority Date :12/09/2012
(33) Name of priority country :U.S.A.
(86) International Application No :PCT/US2013/048176
Filing Date :27/06/2013
(87) International Publication No :WO 2014/042745
(61) Patent of Addition to Application Number :NA
Filing Date :NA
(62) Divisional to Application Number :NA
Filing Date :NA

(71)**Name of Applicant :**
1)TENNECO AUTOMOTIVE OPERATING COMPANY, INC.
Address of Applicant :500 North Field Drive, Lake Forest, IL 60045 UNITED STATES OF AMERICA
(72)**Name of Inventor :**
1)LATHAM, Ruth
2)ALCINI, William

(57) Abstract :
An exhaust treatment unit including a longitudinal core around an axis, a support mat and powdered insulation impregnated between first and second layers of the support mat. !n assembly, the mat is first wrapped around the core once, and powdered insulation is applied to the surface of the unwrapped portion of the mat prior to further winding whereby powdered insulation is disposed between mat layers after further winding.

No. of Pages : 20 No. of Claims : 10

(12) PATENT APPLICATION PUBLICATION
(19) INDIA
(22) Date of filing of Application :12/12/2014
(21) Application No.2912/KOLNP/2014 A
(43) Publication Date : 08/05/2015

(54) Title of the invention : CERAMIC MATERIAL FOR DECORATION AND PROCESS FOR ITS PREPARATION

(51) International classification :C04B41/86,C09C3/04,B41M5/00
(31) Priority Document No :MI2012A001163
(32) Priority Date :02/07/2012
(33) Name of priority country :Italy
(86) International Application No :PCT/IB2013/055285
Filing Date :27/06/2013
(87) International Publication No :WO 2014/006548
(61) Patent of Addition to Application Number :NA
Filing Date :NA
(62) Divisional to Application Number :NA
Filing Date :NA

(71)**Name of Applicant :**
1)SYSTEM S.P.A.
Address of Applicant :Via Ghiarola Vecchia 73, I-41042 Fiorano Modenese (Modena) ITALY
(72)**Name of Inventor :**
1)STEFANI, Franco
2)CAMORANI, Carlo Antonio

(57) Abstract :
The present invention relates to a granular material for decorative use, in particular for use in digital control decoration, and to a process for the preparation thereof characterized by a calcinating step at high temperatures.

No. of Pages : 17 No. of Claims : 13

(12) PATENT APPLICATION PUBLICATION
(19) INDIA
(22) Date of filing of Application :12/12/2014
(21) Application No.2913/KOLNP/2014 A
(43) Publication Date : 08/05/2015

(54) Title of the invention : HONEYCOMB FILTER

(51) International classification	:B01D39/20,B01D46/00,B28B3/20
(31) Priority Document No	:PCT/JP2012/065390
(32) Priority Date	:15/06/2012
(33) Name of priority country	:Japan
(86) International Application No	:PCT/JP2013/066240
Filing Date	:12/06/2013
(87) International Publication No	:WO 2013/187444
(61) Patent of Addition to Application Number	:NA
Filing Date	:NA
(62) Divisional to Application Number	:NA
Filing Date	:NA

(71)**Name of Applicant :**
1)IBIDEN CO., LTD.
Address of Applicant :1, Kandacho 2-chome, Ogaki-shi, Gifu 5038604 JAPAN
(72)**Name of Inventor :**
1)SHIBATA Toshiaki
2)MIWA Yuki

(57) Abstract :
This honeycomb filter is provided with exhaust gas introduction cells having the end on the exhaust gas inlet side opened and the end on the exhaust gas outlet side sealed, and exhaust gas discharge cells having the end on the exhaust gas outlet side opened and the end on the exhaust gas inlet side sealed, and is characterized in that: exhaust gas introduction cells are adjacent, separated by a porous cell wall, around the entire perimeter of the exhaust gas discharge cells; there are two types of exhaust gas introduction cells, first exhaust gas introduction cells, and second exhaust gas introduction cells which have an area of the cross section perpendicular to the cell longitudinal direction greater than that of the first exhaust gas introduction cells; the cell cross sectional area of the exhaust gas discharge cells is greater than or equal to the cell cross sectional area of the second exhaust gas introduction cells; the exhaust gas discharge cells and exhaust gas introduction cells are all polygonal; and, of the edges configuring the cross sectional shape of the first exhaust gas introduction cells, the length of an edge that faces an exhaust gas discharge cell is greater than the length of an edge configuring the cross sectional shape of the second exhaust gas introduction cells that faces the exhaust gas discharge cell.

No. of Pages : 136 No. of Claims : 26

(12) PATENT APPLICATION PUBLICATION
(21) Application No.2807/KOLNP/2014 A
(19) INDIA
(22) Date of filing of Application :04/12/2014
(43) Publication Date : 08/05/2015

(54) Title of the invention : METHOD FOR DETERMINING A CONCENTRATION OF A POLYSORBATE SPECIES IN A MIXTURE

(51) International classification :G01N21/55
(31) Priority Document No :61/650,735
(32) Priority Date :23/05/2012
(33) Name of priority country :U.S.A.
(86) International Application No :PCT/IB2013/001590
Filing Date :21/05/2013
(87) International Publication No :WO 2013/175312
(61) Patent of Addition to Application Number :NA
Filing Date :NA
(62) Divisional to Application Number :NA
Filing Date :NA

(71)**Name of Applicant :**
1)GLAXOSMITHKLINE BIOLOGICALS SA
Address of Applicant :89 RUE DE I'INSTITUT, B-1330 RIXENSART BELGIUM
(72)**Name of Inventor :**
1)GBAGUIDI, BENEDICTE
2)GERMANY, OLIVIER, C
3)LARDAU,SONIA

(57) Abstract :
A method for determining a concentration of a polysorbate species, such as polysorbate 20, polysorbate 40, polysorbate 60, or polysorbate 80, in a mixture comprises obtaining a test sample of said mixture, adding an internal standard, preferably azide, to said test sample, obtaining, with a spectrometer, a mid-infrared Attenuated Total Reflectance (ATR) spectrum of the test sample, e.g. by using and ATR-FTIR apparatus, identifying, from the reflectance spectrum, a wavenumber corresponding to the C=0 peak (e. g., 1735 cm-1), identifying, from the reflectance spectrum, a wavenumber corresponding to the internal standard, calculating the area under the curve for said C=O wavenumber, normalized by the internal standard, and comparing said area to a calibration curve to determine the concentration of polysorbate in said test sample.

No. of Pages : 38 No. of Claims : 25

(12) PATENT APPLICATION PUBLICATION
(19) INDIA
(22) Date of filing of Application :04/12/2014
(21) Application No.2808/KOLNP/2014 A
(43) Publication Date : 08/05/2015

(54) Title of the invention : RESORCINOL DERIVATIVES AND THEIR COSMETIC APPLICATION

(51) International classification	:C07C235/34,C07C235/38,C07C243/32
(31) Priority Document No	:1255715
(32) Priority Date	:19/06/2012
(33) Name of priority country	:France
(86) International Application No	:PCT/IB2013/055027
Filing Date	:19/06/2013
(87) International Publication No	:WO 2013/190482
(61) Patent of Addition to Application Number	:NA
Filing Date	:NA
(62) Divisional to Application Number	:NA
Filing Date	:NA

(71)**Name of Applicant :**
1)L'OREAL
Address of Applicant :14 rue Royale, F-75008 Paris FRANCE
(72)**Name of Inventor :**
1)MARAT, Xavier

(57) Abstract :
The present invention relates to a compound of formula (I): in which: Rdenotes a hydrogen atom or an acetyl group; and Ydenotes a radical chosen from OR or NAR ; and their salts, their solvates and their optical isomers, their racemates, alone or as mixtures. It also relates to their cosmetic use, in particular as depigmenting agent, and to the associated cosmetic method.

No. of Pages : 60 No. of Claims : 15

(12) PATENT APPLICATION PUBLICATION
(21) Application No.2809/KOLNP/2014 A
(19) INDIA
(22) Date of filing of Application :04/12/2014
(43) Publication Date : 08/05/2015

(54) Title of the invention : EXTRACTIVE CONTINUOUS AMMONIA MONITORING SYSTEM

(51) International classification :G01N21/39
(31) Priority Document No :61/645,330
(32) Priority Date :10/05/2012
(33) Name of priority country :U.S.A.
(86) International Application No :PCT/US2013/040361
Filing Date :09/05/2013
(87) International Publication No :WO 2013/170039
(61) Patent of Addition to Application Number :NA
Filing Date :NA
(62) Divisional to Application Number :NA
Filing Date :NA

(71)**Name of Applicant :**
1)FUEL TECH, INC.
Address of Applicant :27601 Bella Vista Parkway, Warrenville, IL 60555 UNITED STATES OF AMERICA
(72)**Name of Inventor :**
1)CARMIGNANI, Paul, G.
2)BOYLE, John, M.
3)MAYHEW, Scott, M.

(57) Abstract :
Disclosed are methods and apparatus for treating and analyzing a gas stream to determine the ammonia concentration. A gas stream is continuously monitored to determine the ammonia concentration by extracting gas samples from one or more locations and sending it to a tunable diode laser absorption spectroscopy instrument for analysis. By proper placement of sampling probes within a duct, depending on the particular flow patterns that have been determined by suitable modeling, e.g. computational fluid dynamics or cold flow modeling, the valves can be operated manually or by a controller to take samples at predetermined locations within the duct. This will enable taking samples from particular locations, samples representative of the entire cross section, or samples that are an average of a particular cross section.

No. of Pages : 16 No. of Claims : 8

(12) PATENT APPLICATION PUBLICATION
(19) INDIA
(22) Date of filing of Application :04/12/2014
(21) Application No.2810/KOLNP/2014 A
(43) Publication Date : 08/05/2015

(54) Title of the invention : SAFETY ELEMENT FOR A PASSENGER TRANSPORT INSTALLATION

(51) International classification :B66B29/00
(31) Priority Document No :10 2012 013 704.4
(32) Priority Date :10/07/2012
(33) Name of priority country :Germany
(86) International Application No :PCT/EP2013/063533
Filing Date :27/06/2013
(87) International Publication No :WO 2014/009166
(61) Patent of Addition to Application Number :NA
Filing Date :NA
(62) Divisional to Application Number :NA
Filing Date :NA

(71)**Name of Applicant :**
1)KONE CORPORATION
Address of Applicant :Kartanontie 1, FIN-00330 Helsinki FINLAND
(72)**Name of Inventor :**
1)LANZKI, Winfried
2)ZEIGER, Heinrich

(57) Abstract :
The invention relates to a method and a device for monitoring a passenger transport installation, specifically for monitoring the entraining elements (5, 6, 18, 19, 37, 42) that establish a connection of a plate link chain to a step (1) or pallet (29) of the passenger transport installation, wherein a triggering element (11, 12, 25, 26, 27, 43) is provided at the entraining element, which triggering element triggers an alarm state if a specifiable motion of the entraining element is detected or if at least one safety element is missing.

No. of Pages : 24 No. of Claims : 11

(12) PATENT APPLICATION PUBLICATION
(19) INDIA
(22) Date of filing of Application :15/12/2014
(21) Application No.2926/KOLNP/2014 A
(43) Publication Date : 08/05/2015

(54) Title of the invention : CAPSULE FOR MAKING BEVERAGES

(51) International classification :B65D85/816
(31) Priority Document No :VR2012A000133
(32) Priority Date :03/07/2012
(33) Name of priority country :Italy
(86) International Application No :PCT/IB2013/055105
Filing Date :21/06/2013
(87) International Publication No :WO 2014/006527
(61) Patent of Addition to Application Number :NA
Filing Date :NA
(62) Divisional to Application Number :NA
Filing Date :NA

(71)**Name of Applicant :**
1)CAFFITALY SYSTEM S.P.A.
Address of Applicant :Via Panigali 38, I-40041 Gaggio Montano (Bologna) ITALY
(72)**Name of Inventor :**
1)DIGIUNI, Paolo
2)ACCURSI Giovanni

(57) Abstract :
Capsule (1) for making beverages comprising a body (2) having a lower wall (3), a side wall (4), and a lid (6) fixed to an edge (5) of the side wall. Between the lid and the inner surface of the body is a chamber in which a filter (10) is positioned coupled at a coupling portion (14) located on the side wall close to the edge. The filter separates the chamber into a first compartment (15) containing the substance, delimited at least between the filter and the lid, and into a second compartment (16) partly positioned between the side wall and the filter, delimited between the filter, the lower wall and the portion of side wall located between the lower wall and the coupling portion. The second compartment comprises openings (11) at the part of it positioned between the filter and the side wall.

No. of Pages : 30 No. of Claims : 18

(12) PATENT APPLICATION PUBLICATION
(19) INDIA
(22) Date of filing of Application :26/11/2014
(21) Application No.2718/KOLNP/2014 A
(43) Publication Date : 08/05/2015

(54) Title of the invention : DEACIDIFICATION OF FATS AND OILS

(51) International classification :C11B3/12,C11B3/14
(31) Priority Document No :12176123.3
(32) Priority Date :12/07/2012
(33) Name of priority country :EPO
(86) International Application No :PCT/EP2013/062705
Filing Date :19/06/2013
(87) International Publication No :WO 2014/009117
(61) Patent of Addition to Application Number :NA
Filing Date :NA
(62) Divisional to Application Number :NA
Filing Date :NA

(71)**Name of Applicant :**
1)ALFA LAVAL CORPORATE AB
Address of Applicant :P.O. Box 73, S- 22100 Lund, SWEDEN
(72)**Name of Inventor :**
1)SARUP, Bent

(57) Abstract :
The invention relates to method for deacidification of fats and oils comprising: feeding stream (1) to a stripping section; condensing the volatile phase in a high temperature condensing zone, sending the condensed phase to distillation A; distillating the condensed phase, obtaining a volatile stream; passing the volatile stream along with the vapour phase from the condensation zone to a cold condensation zone obtaining a condensate and a stream (4); allowing stream (4) to continue to vacuum system and subjecting the cold condensate to distillation B; and producing a stream of fatty acids (5) and a stream of micronutrients (6).

No. of Pages : 26 No. of Claims : 15

(12) PATENT APPLICATION PUBLICATION
(21) Application No.2719/KOLNP/2014 A
(19) INDIA
(22) Date of filing of Application :26/11/2014
(43) Publication Date : 08/05/2015

(54) Title of the invention : PATTERN EXTRACTING DEVICE, IMAGE PROJECTING DEVICE, PATTERN EXTRACTING METHOD, AND PROGRAM

(51) International classification :H04N5/74,G09G5/00
(31) Priority Document No :2012-115526
(32) Priority Date :21/05/2012
(33) Name of priority country :Japan
(86) International Application No :PCT/JP2013/064297
Filing Date :16/05/2013
(87) International Publication No :WO 2013/176198
(61) Patent of Addition to Application Number :NA
Filing Date :NA
(62) Divisional to Application Number :NA
Filing Date :NA

(71)**Name of Applicant :**
1)RICOH COMPANY, LTD.
Address of Applicant :3-6, Nakamagome 1-chome, Ohta-ku, Tokyo, 1438555 JAPAN
(72)**Name of Inventor :**
1)UCHIYAMA, Yukinaka
2)HASEGAWA, Fumihiro

(57) Abstract :
[Object] To provide a pattern extracting device, an image projecting device, a pattern extracting method, and a program capable of extracting all the feature points by interpolating defective feature points even when there are defective feature points of an image pattern. [Means for solving the problem] A pattern extracting device in the present invention extracts the feature points to be interpolated based on a captured image of a projected image pattern, and interpolates the feature point to be interpolated by using near-by feature points that are located near the feature point. Further, the pattern extracting device in the present invention divides the near-by feature points into groups, calculates extrapolation coordinates of the groups, and calculates coordinates of the feature point to be interpolated in view of significance of the extrapolation.

No. of Pages : 76 No. of Claims : 20

(12) PATENT APPLICATION PUBLICATION
(19) INDIA
(22) Date of filing of Application :05/12/2014
(21) Application No.2830/KOLNP/2014 A
(43) Publication Date : 08/05/2015

(54) Title of the invention : EXENDIN-4 PEPTIDE ANALOGUES

(51) International classification :C07K14/62
(31) Priority Document No :12172010.6
(32) Priority Date :14/06/2012
(33) Name of priority country :EPO
(86) International Application No :PCT/EP2013/062090
Filing Date :12/06/2013
(87) International Publication No :WO 2013/186240
(61) Patent of Addition to Application Number :NA
Filing Date :NA
(62) Divisional to Application Number :NA
Filing Date :NA

(71)**Name of Applicant :**
1)SANOFI
Address of Applicant :54 rue La Boétie, F-75008 Paris FRANCE
(72)**Name of Inventor :**
1)HAACK, Torsten
2)WAGNER, Michael
3)HENKEL, Bernd
4)STENGELIN, Siegfried
5)EVERS, Andreas

(57) Abstract :
The present invention relates to exendin 4 peptide analogues and their medical use for example in the treatment of disorders of the metabolic syndrome including diabetes and obesity as well as reduction of excess food intake.

No. of Pages : 125 No. of Claims : 20

(12) PATENT APPLICATION PUBLICATION
(19) INDIA
(22) Date of filing of Application :05/12/2014
(21) Application No.2831/KOLNP/2014 A
(43) Publication Date : 08/05/2015

(54) Title of the invention : COMPOSITIONS AND METHODS RELATED TO PREVENTION AND TREATMENT OF RABIES INFECTION

(51) International classification	:C07K16/10,C12N15/13,A61K39/42
(31) Priority Document No	:NA
(32) Priority Date	:NA
(33) Name of priority country	:NA
(86) International Application No Filing Date	:PCT/CN2012/076012 :24/05/2012
(87) International Publication No	:WO 2013/174003
(61) Patent of Addition to Application Number Filing Date	:NA :NA
(62) Divisional to Application Number Filing Date	:NA :NA

(71)**Name of Applicant :**
1)MOUNTGATE GROUP LIMITED
Address of Applicant :P.O. Box 957 Offshore Incorporations Centre Road Town Tortola (VG) UNITED KINGDOM
(72)**Name of Inventor :**
1)SHEN, Enyun
2)REN, Shiqi

(57) Abstract :
The present disclosure relates generally to anti rabies antibodies that can bind to and neutralize rabies virus. Antibodies of the present technology are useful alone or in combination with therapies known in the art for the treatment or prevention of rabies infection.

No. of Pages : 130 No. of Claims : 20

(12) PATENT APPLICATION PUBLICATION
(19) INDIA
(22) Date of filing of Application :15/12/2014
(21) Application No.2931/KOLNP/2014 A
(43) Publication Date : 08/05/2015

(54) Title of the invention : PAYMENT AUTHORIZATION SYSTEM

(51) International classification :G06Q20/40
(31) Priority Document No :13/538,531
(32) Priority Date :29/06/2012
(33) Name of priority country :U.S.A.
(86) International Application No :PCT/US2013/047971
Filing Date :26/06/2013
(87) International Publication No :WO 2014/004716
(61) Patent of Addition to Application Number :NA
Filing Date :NA
(62) Divisional to Application Number :NA
Filing Date :NA

(71)**Name of Applicant :**
1)EBAY INC.
Address of Applicant :2145 Hamilton Avenue, San Jose, California 95125 UNITED STATES OF AMERICA
(72)**Name of Inventor :**
1)SCIPIONI, German Carlos
2)OH, Byong Mok

(57) Abstract :
A payment authorization system includes an account database associating a first user device and a payment account. A system provider device in the payment authorization system is coupled to a network and the account database. The system provider device is operable to receive a payment request from a second user device over the network to make a payment using the payment account. In response to receiving the payment request, the system provider device sends an authorization request to the first user device over the network. In response to receiving an authorization from the first user device over the network, the system provider device sends an instruction over the network to make a payment according to the payment request. The first user device may designate the second user device for using the payment account such that a temporary security code is sent to the second user device over the network.

No. of Pages : 37 No. of Claims : 20

(12) PATENT APPLICATION PUBLICATION
(19) INDIA
(22) Date of filing of Application :05/12/2014
(21) Application No.2826/KOLNP/2014 A
(43) Publication Date : 08/05/2015

(54) Title of the invention : PREDICTIVE 411

(51) International classification :G06F17/30
(31) Priority Document No :61/644,347
(32) Priority Date :08/05/2012
(33) Name of priority country :U.S.A.
(86) International Application No :PCT/US2013/040160
Filing Date :08/05/2013
(87) International Publication No :WO 2013/169912
(61) Patent of Addition to Application Number :NA
Filing Date :NA
(62) Divisional to Application Number :NA
Filing Date :NA

(71)**Name of Applicant :**
1)24/7 CUSTOMER INC.
Address of Applicant :910 E.Hamilton Ave, Ste. 240, Campbell, CA 95008-0610 UNITED STATES OF AMERICA
(72)**Name of Inventor :**
1)NGUYEN, Patrick
2)LINDSETH, Trey
3)NGUYEN, Quang

(57) Abstract :
A system predicts the intent of a user and proactively offers to perform a query that satisfies that intent. Upon the user s acceptance of the offer the system begins a search for related information. The system examines such factors as search terms typed or spoken by said user historical attributes of said user historical journey attributes of said user current journey attributes of said user user location user movement current time user profile user calendar user information stored on or associated with a device within the user s possession. The system then makes a prediction of any of the user s intent query category and issue category. Based upon the results of the system s prediction a query that is relevant to the user s intent and/or issue categories is presented and upon the user s command the results of the search are returned to the user.

No. of Pages : 34 No. of Claims : 20

(12) PATENT APPLICATION PUBLICATION
(19) INDIA
(22) Date of filing of Application :05/12/2014
(21) Application No.2827/KOLNP/2014 A
(43) Publication Date : 08/05/2015

(54) Title of the invention : SYSTEMS AND METHODS FOR SUPPORTING A SNMP REQUEST OVER A CLUSTER

(51) International classification :H04L12/24,H04L29/08
(31) Priority Document No :13/525,042
(32) Priority Date :15/06/2012
(33) Name of priority country :U.S.A.
(86) International Application No :PCT/US2013/045915
Filing Date :14/06/2013
(87) International Publication No :WO 2013/188780
(61) Patent of Addition to Application Number :NA
Filing Date :NA
(62) Divisional to Application Number :NA
Filing Date :NA

(71)**Name of Applicant :**
1)CITRIX SYSTEMS, INC.
Address of Applicant :851 West Cypress Creek Road, Fort Lauderdale, Florida 33309 UNITED STATES OF AMERICA
(72)**Name of Inventor :**
1)ANNAMALAISAMI, Saravana
2)HOLLA, Raveendra
3)JAIN, Nishant Kumar
4)MITHYANTHA, Sharvari
5)GEDAM, Dhiraj

(57) Abstract :
The present disclosure is directed towards systems and methods for supporting Simple Network Management Protocol (SNMP) request operations over clustered networking devices. The system includes a cluster that includes a plurality of intermediary devices and an SNMP agent executing on a first intermediary device of the plurality of intermediary devices. The SNMP agent receives an SNMP GETNEXT request for an entity. Responsive to receipt of the SNMP GETNEXT request the SNMP agent requests a next entity from each intermediary device of the plurality of intermediary devices of the cluster. To respond to the SNMP request the SNMP agent selects a lexicographically minimum entity. The SNMP agent may select the lexicographically minimum entity from a plurality of next entities received via responses from each intermediary device of the plurality of intermediary devices.

No. of Pages : 109 No. of Claims : 20

(12) PATENT APPLICATION PUBLICATION
(19) INDIA
(22) Date of filing of Application :05/12/2014
(21) Application No.2828/KOLNP/2014 A
(43) Publication Date : 08/05/2015

(54) Title of the invention : DISK HAVING AN ELECTRICAL CONNECTION ELEMENT

(51) International classification :H01R4/58,H01R13/11,H05B3/84
(31) Priority Document No :12171029.7
(32) Priority Date :06/06/2012
(33) Name of priority country :EPO
(86) International Application No :PCT/EP2013/060116
Filing Date :16/05/2013
(87) International Publication No :WO 2013/182394
(61) Patent of Addition to Application Number :NA
Filing Date :NA
(62) Divisional to Application Number :NA
Filing Date :NA

(71)**Name of Applicant :**
1)SAINT-GOBAIN GLASS FRANCE
Address of Applicant :18 avenue d'Alsace, F-92400 Courbevoie, FRANCE
(72)**Name of Inventor :**
1)SCHMALBUCH, Klaus
2)REUL, Bernhard
3)LESMEISTER, Lothar
4)RATEICZAK, Mitja

(57) Abstract :
The present invention relates to a disk having at least one electrical connection element comprising: a substrate (1) an electrically conductive structure (2) on a region of the substrate (1) a connection element (3) which is formed as a push button and contains at least one chromium containing steel and a layer of a solder material (4) which electrically connects the connection element (3) to partial regions of the electrically conductive structure (2).

No. of Pages : 24 No. of Claims : 14

(12) PATENT APPLICATION PUBLICATION
(19) INDIA
(22) Date of filing of Application :15/12/2014
(21) Application No.2939/KOLNP/2014 A
(43) Publication Date : 08/05/2015

(54) Title of the invention : MICROSTRUCTURE-BASED WOUND CLOSURE DEVICES

(51) International classification :A61F2/00,A61B5/15,A61M37/00
(31) Priority Document No :61/660,561
(32) Priority Date :15/06/2012
(33) Name of priority country :U.S.A.
(86) International Application No :PCT/US2013/046181
Filing Date :17/06/2013
(87) International Publication No :WO 2013/188884
(61) Patent of Addition to Application Number :NA
Filing Date :NA
(62) Divisional to Application Number :NA
Filing Date :NA

(71)**Name of Applicant :**
1)UNIVERSITY OF WASHINGTON THROUGH ITS CENTER FOR COMMERCIALIZATION
Address of Applicant :4311 11th Avenue NE, Suite 500, Seattle, WA 98105-4608 UNITED STATES OF AMERICA
(72)**Name of Inventor :**
1)ROLANDI, Marco
2)RUVOLO, Vittorio
3)BERENSON, Ronald, J.
4)RUEBEL, Chase
5)JIN, Jungho

(57) Abstract :
The present invention relates generally to wound closure devices comprising one or more microstructures. The devices are designed such that the microstructures are able to grip the skin or tissue surrounding a wound, optionally closing the wound, or securing the tissue or skin in place. Also provided are wound closure systems that comprise one or more microstructure wound closure devices along with other components, such as protective covers and wound healing therapeutics. A variety of packaging specifications are disclosed, as is a dispenser apparatus configured to enable simple one-handed application of the wound closure devices. Methods described herein provide for the closure of various wounds with the wound closure devices and systems.

No. of Pages : 104 No. of Claims : 112

(12) PATENT APPLICATION PUBLICATION
(19) INDIA
(22) Date of filing of Application :15/12/2014
(21) Application No.2942/KOLNP/2014 A
(43) Publication Date : 08/05/2015

(54) Title of the invention : ACTUATING DRIVE, ACTUATING DRIVE SYSTEM, METHOD FOR OPERATING AN ACTUATING DRIVE, AND METHOD FOR OPERATING AN ACTUATING DRIVE SYSTEM

(51) International classification :H02J9/06
(31) Priority Document No :10 2012 012 515.1
(32) Priority Date :22/06/2012
(33) Name of priority country :Germany
(86) International Application No :PCT/EP2013/001813
Filing Date :19/06/2013
(87) International Publication No :WO 2013/189599
(61) Patent of Addition to Application Number :NA
Filing Date :NA
(62) Divisional to Application Number :NA
Filing Date :NA

(71)**Name of Applicant :**
1)AUMA RIESTER GMBH & CO. KG
Address of Applicant :Aumastraße 1, 79379 Müllheim GERMANY
(72)**Name of Inventor :**
1)NEWERLA, Henrik
2)WEBER, Thomas
3)PLATZER, Wilfried
4)HOFMANN, Benjamin

(57) Abstract :
In an actuating drive (1) having an electric motor (2) which is driven by a drive unit (4), it is proposed to determine a state of charge of an intermediate circuit capacitor (5) of an intermediate circuit (3) which supplies the drive unit (4) and, depending on the determined state of charge, to adjust electrical power consumption by the electric motor (2) such that a critical state of charge of the intermediate circuit capacitor (5) can be avoided.

No. of Pages : 30 No. of Claims : 16

(12) PATENT APPLICATION PUBLICATION
(19) INDIA
(22) Date of filing of Application :15/12/2014
(21) Application No.2943/KOLNP/2014 A
(43) Publication Date : 08/05/2015

(54) Title of the invention : MEDIUM OR HIGH VOLTAGE SWITCH BUSHING

(51) International classification :H01H13/04
(31) Priority Document No :NA
(32) Priority Date :NA
(33) Name of priority country :NA
(86) International Application No :PCT/US2012/042077
Filing Date :12/06/2012
(87) International Publication No :WO 2013/187886
(61) Patent of Addition to Application Number :NA
Filing Date :NA
(62) Divisional to Application Number :NA
Filing Date :NA

(71)**Name of Applicant :**
1)HUBBELL INCORPORATED
Address of Applicant :584 Derby Milford Road, Orange, Connecticut 06477-4024 UNITED STATES OF AMERICA
(72)**Name of Inventor :**
1)GEROVAC, Joseph, P.
2)TRASKA, Robert, A.

(57) Abstract :
A medium or high voltage switch is provided. The medium or high voltage switch includes a bottle assembly and a bushing. The bottle assembly includes a bottle formed of a first material and defining a chamber. The bottle assembly further includes a plurality of contacts for selectively opening and closing an electrical circuit, the plurality of contacts disposed within the chamber. The bushing is formed of a second material and defines a cavity configured to receive the bottle assembly. The bottle assembly and the bushing have an interference fit.

No. of Pages : 29 No. of Claims : 20

(12) PATENT APPLICATION PUBLICATION
(19) INDIA
(22) Date of filing of Application :15/12/2014
(21) Application No.2944/KOLNP/2014 A
(43) Publication Date : 08/05/2015

(54) Title of the invention : CONTACT TRIGGER RELEASE NEEDLE GUARD WITH ELASTIC SPRING

(51) International classification :A61M5/50,A61M5/32
(31) Priority Document No :61/662,303
(32) Priority Date :20/06/2012
(33) Name of priority country :U.S.A.
(86) International Application No :PCT/US2013/046618
Filing Date :19/06/2013
(87) International Publication No :WO 2013/192328
(61) Patent of Addition to Application Number :NA
Filing Date :NA
(62) Divisional to Application Number :NA
Filing Date :NA

(71)**Name of Applicant :**
1)SAFETY SYRINGES, INC.
Address of Applicant :12875 Loker Avenue East, Carlsbad, California 92010 UNITED STATES OF AMERICA
(72)**Name of Inventor :**
1)SHOONMAKER, Ryan

(57) Abstract :
A needle guard device mountable to a pre-filled syringe in its ready-to-fill state. The device includes a device shield interconnected to a lock collar with flexible member and biased to move relative to the lock collar. The lock collar interfaces with the syringe neck to attach the device to the syringe. As the device shield moves proximally, rotation arms of the lock collar interact with angled cutouts in the device shield, causing the device shield to rotate relative to the lock collar and disengaging one or more keys on the device shield from one or more keyways in the lock collar triggering the device shield to move from a first configuration in which the device shield is retractable to expose a syringe sharp to a second configuration in which the device shield is fixedly positioned to cover the syringe sharp.

No. of Pages : 60 No. of Claims : 25

(12) PATENT APPLICATION PUBLICATION
(19) INDIA
(22) Date of filing of Application :15/12/2014
(21) Application No.2945/KOLNP/2014 A
(43) Publication Date : 08/05/2015

(54) Title of the invention : MOVEMENT ASSISTANCE DEVICE

(51) International classification :A61H1/02,A61H3/00
(31) Priority Document No :61/660,286
(32) Priority Date :15/06/2012
(33) Name of priority country :U.S.A.
(86) International Application No :PCT/US2013/046107
Filing Date :17/06/2013
(87) International Publication No :WO 2013/188868
(61) Patent of Addition to Application Number :NA
Filing Date :NA
(62) Divisional to Application Number :NA
Filing Date :NA

(71)**Name of Applicant :**
1)VANDERBILT UNIVERSITY
Address of Applicant :Center for Technology Transfer, 305 Kirkland Hall, Nashville, Tennessee 37240 UNITED STATES OF AMERICA
(72)**Name of Inventor :**
1)GOLDFARB, Michael
2)MURRAY, Spencer

(57) Abstract :
An exoskeleton for applying force to at least one lower limb of a user, comprising: a hip segment (110); a thigh segment (108) coupled to the hip segment by a powered joint (102); a plurality of sensors associated with the lower limb; and a control system comprising: a sensor interface for receiving sensor signals; a power interface for transmitting control signals to the at least one powered joint; a processor communicatively coupled to the sensor interface and the power interface; and a computer-readable medium having stored thereon a computer program executable on the processor, the computer program comprising a plurality of code sections for: estimating a configuration of a body of the user associated with the exoskeleton with respect to a gravity vector based on the sensor signals at the sensor interface; computing a first control torque for the at least one powered joint that at least partially compensates gravitational dynamics of the user based on the configuration; calculating a gravitational energy gradient for the at least one powered joint; attenuating the first control torque based at least on the gravitational energy gradient to yield a second control torque; computing a final control torque based, at least in part, on the second control torque, and configuring the control signals at the power interface to cause the final control torque to be applied at the at least one powered joint.

No. of Pages : 44 No. of Claims : 21

(12) PATENT APPLICATION PUBLICATION
(19) INDIA
(22) Date of filing of Application :26/11/2014
(21) Application No.2726/KOLNP/2014 A
(43) Publication Date : 08/05/2015

(54) Title of the invention : VISUAL CONFIRMATION OF VOICE RECOGNIZED TEXT INPUT

(51) International classification :G06F3/16,G06F3/01,G06F3/14
(31) Priority Document No :61/664,142
(32) Priority Date :25/06/2012
(33) Name of priority country :U.S.A.
(86) International Application No :PCT/US2013/047178
Filing Date :21/06/2013
(87) International Publication No :WO 2014/004325
(61) Patent of Addition to Application Number :NA
Filing Date :NA
(62) Divisional to Application Number :NA
Filing Date :NA

(71)**Name of Applicant :**
1)GOOGLE INC.
Address of Applicant :1600 Amphitheatre Parkway, Mountain View, California 94043 UNITED STATES OF AMERICA
(72)**Name of Inventor :**
1)STEWART, Andrew
2)NG, Peter
3)FAABORG, Alexander
4)DUARTE, Matias Gonzalo
5)SHIPLACOFF, Daniel Marc Gatan
6)BRINGERT, Bjorn Erik
7)COHEN, Richard Zarek
8)ZANOLIN, Luca
9)PIETRYKA, Pawel
10)HODGSON, Peter John
11)TICKNER, Simon
12)PENHA, Henrique

(57) Abstract :
A computing device receives an audio input from a user. The computing device determines a series of words from the audio input. The computing device outputs, for display, one or more substituted symbols. The one or more substituted symbols correspond to at least a portion of the series of words. In response to determining that receipt of the audio input has completed, the computing device outputs, for display, alphanumeric characters comprising the series of words in place of the one or more substituted symbols.

No. of Pages : 35 No. of Claims : 20

(12) PATENT APPLICATION PUBLICATION
(19) INDIA
(22) Date of filing of Application :26/11/2014
(21) Application No.2727/KOLNP/2014 A
(43) Publication Date : 08/05/2015

(54) Title of the invention : BUSINESS RULES MANAGER

(51) International classification :G06F17/30
(31) Priority Document No :61/657,178
(32) Priority Date :08/06/2012
(33) Name of priority country :U.S.A.
(86) International Application No :PCT/US2013/044790
Filing Date :07/06/2013
(87) International Publication No :WO 2013/185076
(61) Patent of Addition to Application Number :NA
Filing Date :NA
(62) Divisional to Application Number :NA
Filing Date :NA

(71)**Name of Applicant :**
1)24/7 CUSTOMER, INC.
Address of Applicant :910 E. Hamilton Ave. Ste. 240, Campbell, CA 95008-0610 UNITED STATES OF AMERICA
(72)**Name of Inventor :**
1)NGUYEN, Patrick

(57) Abstract :
An apparatus and method is provided for creating, updating, and deleting business rules with ease by use of a rule manager. Business rules are represented as tables that map a set of inputs to a set of outputs. Inputs are represented as enumerations with predefined allowable values. All possible unique combinations of values for a given set of inputs are automatically generated, and a business user can then set the outputs for each desired input value combination.

No. of Pages : 25 No. of Claims : 22

(12) PATENT APPLICATION PUBLICATION
(21) Application No.2949/KOLNP/2014 A
(19) INDIA
(22) Date of filing of Application :16/12/2014
(43) Publication Date : 08/05/2015

(54) Title of the invention : METHOD AND DEVICE FOR REPORTING CHANNEL STATE INFORMATION IN WIRELESS COMMUNICATION SYSTEM

(51) International classification :H04B7/08,H04B17/00
(31) Priority Document No :61/667,406
(32) Priority Date :02/07/2012
(33) Name of priority country :U.S.A.
(86) International Application No :PCT/KR2013/005854
Filing Date :02/07/2013
(87) International Publication No :WO 2014/007512
(61) Patent of Addition to Application Number :NA
Filing Date :NA
(62) Divisional to Application Number :NA
Filing Date :NA

(71)**Name of Applicant :**
1)LG ELECTRONICS INC.
Address of Applicant :20 Yeouido-dong, Yeongdeungpo-gu, Seoul 150-721 REPUBLIC OF KOREA
(72)**Name of Inventor :**
1)KIM, Kijun
2)PARK, Jonghyun
3)SEO, Hanbyul
4)PARK, Hanjun

(57) Abstract :
A method of reporting channel state information (CSI) on a terminal in which a plurality of CSI processes are configured in a wireless communication system according to an embodiment of the present invention includes: measuring a channel based on a CSI reference signal (RS) resource related to one of the CSI processes; measuring interference based on a CSI-interference measurement (IM) resource related to the CSI process; determining CSI based on the measured channel and the measured interference; and reporting the CSI through an uplink channel, wherein a codebook for reporting the CSI, which is used for determining the CSI, is one of two or more codebooks that correspond independently to each of the CSI processes.

No. of Pages : 69 No. of Claims : 13

(12) PATENT APPLICATION PUBLICATION
(19) INDIA
(22) Date of filing of Application :16/12/2014
(21) Application No.2950/KOLNP/2014 A
(43) Publication Date : 08/05/2015

(54) Title of the invention : INSULATIONS CONTAINING NON-MIGRATING ANTISTATIC AGENT

(51) International classification :C08L 23/00,C08K 5/17
(31) Priority Document No :61/670,844
(32) Priority Date :12/07/2012
(33) Name of priority country :U.S.A.
(86) International Application No :PCT/US2013/050047
Filing Date :11/07/2013
(87) International Publication No :WO 2014/011854
(61) Patent of Addition to Application Number :NA
Filing Date :NA
(62) Divisional to Application Number :NA
Filing Date :NA

(71)**Name of Applicant :**
1)GENERAL CABLE TECHNOLOGIES CORPORATION
Address of Applicant :4 TESSENEER DRIVE, HIGHLAND HEIGHTS, KENTUCKY 41076 UNITED STATES OF AMERICA
(72)**Name of Inventor :**
1)LIU, JIANMIN
2)MHETAR, VIJAY
3)CULLIGAN, SEAN, W.

(57) Abstract :
The invention provides an insulation composition for an electric cable containing a polyolefin, a permanent (non-migrating) antistatic agent, a phenolic antioxidant, and a peroxide. Preferably, the permanent antistatic agent is present at about 0.5-5 percent by weight of the total composition, preferably about 0.8-3 percent, and more preferably about 0.9-2.5 percent.

No. of Pages : 34 No. of Claims : 20

(12) PATENT APPLICATION PUBLICATION
(19) INDIA
(22) Date of filing of Application :16/12/2014
(21) Application No.2951/KOLNP/2014 A
(43) Publication Date : 08/05/2015

(54) Title of the invention : PYRIMIDINONE DERIVATIVES AS ANTIMALARIAL AGENTS

(51) International classification :C07D487/04,A61K31/519,A61P33/00
(31) Priority Document No :12559258
(32) Priority Date :22/06/2012
(33) Name of priority country :France
(86) International Application No :PCT/EP2013/063065
Filing Date :21/06/2013
(87) International Publication No :WO 2013/190123
(61) Patent of Addition to Application Number :NA
Filing Date :NA
(62) Divisional to Application Number :NA
Filing Date :NA

(71)**Name of Applicant :**
1)SANOFI
Address of Applicant :54 rue La Boétie F-75008 Paris FRANCE
(72)**Name of Inventor :**
1)EL-AHMAD, Youssef
2)FILOCHE-ROMME, Bruno
3)GANZHORM, Axel
4)MARCINIAK, Gilbert
5)MUZET, Nicolas
6)RONAN, Baptiste
7)VIVET, Bertrand
8)ZERR, Véronique

(57) Abstract :
The invention relates to novel pyrimidinone-based heterocyclic compounds which are parasite growth inhibitors, having the general formula (I) in which Y is a morpholine chosen from three bridged morpholines, L is a bond or a linker, n = 0 or 1 and R2 is a methyl group when n = 0 and a hydrogen atom when n = 1. Process for the preparation thereof and therapeutic use thereof.

No. of Pages : 199 No. of Claims : 23

(12) PATENT APPLICATION PUBLICATION
(21) Application No.2952/KOLNP/2014 A
(19) INDIA
(22) Date of filing of Application :16/12/2014
(43) Publication Date : 08/05/2015

(54) Title of the invention : OPTIMUM DOSE REGIME OF AN ANTI-NOGO-A ANTIBODY IN THE TREATMENT OF AMYOTHROPHIC LATERAL SCLEROSIS

(51) International classification :C07K16/22
(31) Priority Document No :61/668,134
(32) Priority Date :05/07/2012
(33) Name of priority country :U.S.A.
(86) International Application No :PCT/EP2013/064063
Filing Date :03/07/2013
(87) International Publication No :WO 2014/006105
(61) Patent of Addition to Application Number :NA
Filing Date :NA
(62) Divisional to Application Number :NA
Filing Date :NA

(71)**Name of Applicant :**
1)GLAXO GROUP LIMITED
Address of Applicant :980 Great West Road, Brentford Middlesex TW8 9GS UNITED KINGDOM
(72)**Name of Inventor :**
1)BULLMAN, Jonathan
2)KRULL, David

(57) Abstract :
The invention relates to a method of treatment or prophylaxis of a neurological disorder, in particular but not exclusively amyotrophic lateral sclerosis (ALS), comprising administration of an anti-Nogo-A antibody.

No. of Pages : 36 No. of Claims : 20

(12) PATENT APPLICATION PUBLICATION
(19) INDIA
(22) Date of filing of Application :18/11/2014
(21) Application No.2635/KOLNP/2014 A
(43) Publication Date : 08/05/2015

(54) Title of the invention : MOBILE PAYMENT VIA A VIRTUAL PERIPHERAL DEVICE

(51) International classification	:G06Q20/20,G06Q20/32,G06Q20/40
(31) Priority Document No	:13/489,600
(32) Priority Date	:06/06/2012
(33) Name of priority country	:U.S.A.
(86) International Application No	:PCT/US2012/066537
Filing Date	:26/11/2012
(87) International Publication No	:WO 2013/184159
(61) Patent of Addition to Application Number	:NA
Filing Date	:NA
(62) Divisional to Application Number	:NA
Filing Date	:NA

(71)**Name of Applicant :**
1)INTUIT INC.
Address of Applicant :2700 Coast Avenue, Mountain View, California 94043 UNITED STATES OF AMERICA
(72)**Name of Inventor :**
1)RAN, Alexander S.

(57) Abstract :
During a financial transaction, a customer provides a token that identifies the customer to a peripheral device (which is other than a credit-authorization terminal or a magnetic-stripe reader) coupled to the point-of-sale terminal. Then, a unified point-of-sale service object executing on the point-of-sale terminal, which is a driver for a virtual peripheral device, performs one or more operations based on at least the token to obtain financial information associated with the customer. After providing the financial information and transaction information associated with the financial transaction to a financial institution specified in the financial information, the point-of-sale terminal receives a confirmation from the financial institution that the financial transaction has been completed. For example, the confirmation may be received via a credit-authorization-terminal service object that is a driver for the credit-authorization terminal.

No. of Pages : 24 No. of Claims : 20

(12) PATENT APPLICATION PUBLICATION
(19) INDIA
(22) Date of filing of Application :18/11/2014
(21) Application No.2636/KOLNP/2014 A
(43) Publication Date : 08/05/2015

(54) Title of the invention : LOW ENERGY METHOD FOR THE PREPARATION OF NON-DERIVATIZED NANOCELLULOSE

(51) International classification :C08B15/02,D21C9/00,D21H11/18
(31) Priority Document No :12176252.0
(32) Priority Date :13/07/2012
(33) Name of priority country :EPO
(86) International Application No :PCT/EP2013/064776
Filing Date :12/07/2013
(87) International Publication No :WO 2014/009517
(61) Patent of Addition to Application Number :NA
Filing Date :NA
(62) Divisional to Application Number :NA
Filing Date :NA

(71)**Name of Applicant :**
1)SAPPI NETHERLANDS SERVICES B.V.
Address of Applicant :Biesenweg 16, NL-6211 AA Maastricht NETHERLANDS
(72)**Name of Inventor :**
1)GRAVESON, Ian
2)ENGLISH, Robert

(57) Abstract :
The present invention is directed towards a low energy method for the preparation of nanocellulose using selected organic or inorganic swelling agents. The use of these swelling agents allows opening up the intercrystalline structure and partially the intracrystalline structure of cellulosic materials thereby achieving a reduction in the energy required to subsequently process the resultant swollen cellulose material into nanocellulose.

No. of Pages : 23 No. of Claims : 8

(12) PATENT APPLICATION PUBLICATION
(19) INDIA
(22) Date of filing of Application :27/11/2014
(21) Application No.2739/KOLNP/2014 A
(43) Publication Date : 08/05/2015

(54) Title of the invention : NEW RELEASE SYSTEM OF HYDROPHOBIC PROTEINS

(51) International classification :A61K38/00,A61K47/36,A61K9/00
(31) Priority Document No :PD2012A000173
(32) Priority Date :31/05/2012
(33) Name of priority country :Italy
(86) International Application No :PCT/IB2013/054477
Filing Date :30/05/2013
(87) International Publication No :WO 2013/179258
(61) Patent of Addition to Application Number :NA
Filing Date :NA
(62) Divisional to Application Number :NA
Filing Date :NA

(71)**Name of Applicant :**
1)FIDIA FARMACEUTICI S.P.A.
Address of Applicant :Via Ponte della Fabbrica, 3/A, I-35031 Abano Terme (PD) ITALY
(72)**Name of Inventor :**
1)CAMPISI, Monica
2)GUARISE, Cristian
3)RENIER, Davide

(57) Abstract :
The object of the present invention is novel release systems comprising specific hyaluronic acid amides combined with therapeutically and/or biologically active proteins with a mainly hydrophobic nature, for sustained, slow release over time which increases the efficacy of the medicament and the patients compliance.

No. of Pages : 44 No. of Claims : 20

(12) PATENT APPLICATION PUBLICATION
(19) INDIA
(22) Date of filing of Application :08/12/2014
(21) Application No.2854/KOLNP/2014 A
(43) Publication Date : 08/05/2015

(54) Title of the invention : SOLVENT EXTRACTION METHOD AND SOLVENT EXTRACTION SETTLER

(51) International classification :C22B3/02,C22B3/20,B01D11/04
(31) Priority Document No :20125718
(32) Priority Date :26/06/2012
(33) Name of priority country :Finland
(86) International Application No :PCT/FI2013/050641
Filing Date :12/06/2013
(87) International Publication No :WO 2014/001623
(61) Patent of Addition to Application Number :NA
Filing Date :NA
(62) Divisional to Application Number :NA
Filing Date :NA

(71)**Name of Applicant :**
1)OUTOTEC (FINLAND) OY
Address of Applicant :Rauhalanpuisto 9 FI-02230 Espoo FINLAND
(72)**Name of Inventor :**
1)VAARNO, Jussi
2)SAARIO, Rami
3)FREDRIKSSON, Henri
4)PAJALA, Jussi

(57) Abstract :
A solvent extraction method for hydrometallurgical liquid-liquid extraction processes, in which method solution phases are separated from a dispersion while the dispersion flows horizontally in a settler from a feed end to a discharge end. The mass flow of the dispersion and solution phases is divided into a plurality of parallel and mutually separated plug flows flowing in the settler from the feed end to the discharge end. The settler (1) comprises a plurality of elongated settler sections (4) which are mutually separated and side by side in parallel to each other, the settler sections (4) extending from the feed end (2) to the discharge end (3), forming a plurality of mutually separated parallel plug flow channels.

No. of Pages : 20 No. of Claims : 8

(12) PATENT APPLICATION PUBLICATION
(21) Application No.2966/KOLNP/2014 A
(19) INDIA
(22) Date of filing of Application :17/12/2014
(43) Publication Date : 08/05/2015

(54) Title of the invention : PROCESS FOR CONVERTING FGD GYPSUM TO AMMONIUM SULFATE AND CALCIUM CARBONATE

(51) International classification :C22B26/20
(31) Priority Document No :61/681,795
(32) Priority Date :10/08/2012
(33) Name of priority country :U.S.A.
(86) International Application No :PCT/US2013/054354
Filing Date :09/08/2013
(87) International Publication No :WO 2014/026120
(61) Patent of Addition to Application Number :NA
Filing Date :NA
(62) Divisional to Application Number :NA
Filing Date :NA

(71)**Name of Applicant :**
1)SPARSTANE TECHNOLOGIES LLC
Address of Applicant :4400 Lewisburg Road, Birmingham, AL 35207 UNITED STATES OF AMERICA
(72)**Name of Inventor :**
1)HASINOFF, Murray, P.
2)PURSELL, Taylor
3)SAIIA, Joseph, A.
4)SHIRLEY, Arthur, R.
5)COCHRAN, Keith, D.
6)HOLT, Timothy, G.

(57) Abstract :
A continuous countercurrent flow process for converting FGD gypsum to ammonium sulfate and calcium carbonate including countercurrent flows with internal recycle of liquids to maximize the purity of reaction products while minimizing reaction times, and further include embodiments of the process that provide a yield of both ammonium sulfate and calcium carbonate to be 97 to 100%, and embodiments that provide for processes having a total time of reaction being 8 to 12 minutes, the invention further including processes for removing contaminants from the FGD gypsum employing an acid rinse process and/or a slurry tank reactor process.

No. of Pages : 141 No. of Claims : 20

(12) PATENT APPLICATION PUBLICATION
(19) INDIA
(22) Date of filing of Application :09/12/2014
(21) Application No.2864/KOLNP/2014 A
(43) Publication Date : 08/05/2015

(54) Title of the invention : 3D VIDEO OBSERVATION DEVICE AND TRANSMITTANCE CONTROL METHOD

(51) International classification	:G02B27/02,G02B27/22,G09G3/20
(31) Priority Document No	:2012-147345
(32) Priority Date	:29/06/2012
(33) Name of priority country	:Japan
(86) International Application No	:PCT/JP2013/002624
Filing Date	:18/04/2013
(87) International Publication No	:WO 2014/002348
(61) Patent of Addition to Application Number	:NA
Filing Date	:NA
(62) Divisional to Application Number	:NA
Filing Date	:NA

(71)**Name of Applicant :**
1)SONY COMPUTER ENTERTAINMENT INC.
Address of Applicant :1-7-1, Konan, Minato-ku, Tokyo 1080075 JAPAN
(72)**Name of Inventor :**
1)OHASHI, Yoshinori

(57) Abstract :
In this 3D video observation device (200), an optically transmissive HMD (208) displays a video observed when a 3D image in a virtual 3D space is projected in a real space. A transmittance alteration unit alters the transmittance of light passing through the optically transmissive HMD (208). A shutter control unit (220) sets the lower limit value for light transmittance to which it is possible for the transmittance alteration unit to alter.

No. of Pages : 56 No. of Claims : 9

(12) PATENT APPLICATION PUBLICATION
(19) INDIA
(22) Date of filing of Application :09/12/2014
(21) Application No.2865/KOLNP/2014 A
(43) Publication Date : 08/05/2015

(54) Title of the invention : LAYER SYSTEM FOR THIN-FILM SOLAR CELLS

(51) International classification :H01L31/032,H01L31/18,H01L31/0392
(31) Priority Document No :12172697.0
(32) Priority Date :20/06/2012
(33) Name of priority country :EPO
(86) International Application No :PCT/EP2013/062715
Filing Date :19/06/2013
(87) International Publication No :WO 2013/189971
(61) Patent of Addition to Application Number :NA
Filing Date :NA
(62) Divisional to Application Number :NA
Filing Date :NA

(71)**Name of Applicant :**
1)BENGBU DESIGN & RESEARCH INSTITUTE FOR GLASS INDUSTRY
Address of Applicant :NO. 1047 TUSHAN ROAD, BENGBU, CHINA
(72)**Name of Inventor :**
1)PALM, Jörg
2)POHLNER, Stephan
3)HAPP, Thomas
4)DALIBOR, Thomas
5)JOST, Stefan
6)DIETMLLER, Roland

(57) Abstract :
The invention relates to a layer system (1) for thin-film solar cells (100) and solar panels, said system comprising an absorber layer (4) containing a chalcogenide semiconductor and a buffer layer (5) which is arranged on the absorber layer (4) and contains halogen-enriched InxSy, where $2/3 \leq x/y \leq 1$. The buffer layer (5) consists of a first layer region (5.1) adjoining the absorber layer (4) and containing a halogen mole fraction A1 and a second layer region (5.1) adjoining the first layer region (5.2) and containing a halogen mole fraction A2. The ratio of A1/A2 is ≥ 2 and the layer thickness (d1) of the first layer region (5.1) $\leq$ 50% of the layer thickness (d) of the buffer layer (5).

No. of Pages : 40 No. of Claims : 16

(12) PATENT APPLICATION PUBLICATION
(19) INDIA
(22) Date of filing of Application :09/12/2014
(21) Application No.2866/KOLNP/2014 A
(43) Publication Date : 08/05/2015

(54) Title of the invention : LAYER SYSTEM FOR THIN-FILM SOLAR CELLS HAVING AN NAXIN1SYCLZ BUFFER LAYER

(51) International classification :H01L31/032,H01L31/18,H01L31/0392
(31) Priority Document No :12172699.6
(32) Priority Date :20/06/2012
(33) Name of priority country :EPO
(86) International Application No :PCT/EP2013/062703
Filing Date :19/06/2013
(87) International Publication No :WO 2013/189968
(61) Patent of Addition to Application Number :NA
Filing Date :NA
(62) Divisional to Application Number :NA
Filing Date :NA

(71)**Name of Applicant :**
1)BENGBU DESIGN & RESEARCH INSTITUTE FOR GLASS INDUSTRY
Address of Applicant :NO. 1047 TUSHAN ROAD, BENGBU, CHINA
(72)**Name of Inventor :**
1)HAPP, Thomas
2)JOST, Stefan
3)PALM, Jörg
4)POHLNER, Stephan
5)DALIBOR, Thomas
6)DIETMÜLLER, Roland

(57) Abstract :
The present invention relates to a layer system (1) for thin film solar cells, comprising an absorber layer (4), which contains a chalcogenide semiconductor, and a buffer layer (5), which is arranged on the absorber layer (4), wherein the buffer layer (5) contains NaxIn1SyClz, with $0.05 \leq x < 0.2$ or $0.2 < x \leq 0.5$, $1 \leq y < 2$, and $0.6 \leq x/z < 1.4$.

No. of Pages : 34 No. of Claims : 15

(12) PATENT APPLICATION PUBLICATION
(19) INDIA
(22) Date of filing of Application :09/12/2014
(21) Application No.2869/KOLNP/2014 A
(43) Publication Date : 08/05/2015

(54) Title of the invention : FIRE SUPPRESSION SYSTEMS, DEVICES, AND METHODS

(51) International classification :F24C15/20
(31) Priority Document No :61/656,941
(32) Priority Date :07/06/2012
(33) Name of priority country :U.S.A.
(86) International Application No :PCT/US2013/044839
Filing Date :07/06/2013
(87) International Publication No :WO 2014/018168
(61) Patent of Addition to Application Number :NA
Filing Date :NA
(62) Divisional to Application Number :NA
Filing Date :NA

(71)**Name of Applicant :**
1)OY HALTON GROUP LTD.
Address of Applicant :Esterinportti 2, FI-00240 Helsinki FINLAND
(72)**Name of Inventor :**
1)LIVCHAK, Andrey, V.
2)BAGWELL, Rick, A.
3)MEREDITH, Philip, J.
4)SCHROCK, Derek, K

(57) Abstract :
Systems, devices, and methods for determining whether a fire condition exists based on a status of a cooking appliance, and systems, devices, and methods for controlling an exhaust air flow rate in an exhaust air ventilation system based on the status of the cooking appliance. At least one sensor type generating a predefined signal is used to detect fire condition and appliance cooking state, the predefined signal being applied to a controller which differentiates, responsively the predefined signal, in combination with other sensor signals, at least two cooking states each of the cooking states corresponding to at least two exhaust flow rates which the controller implements in response to the controllers differentiation of the two states and which predefined signal is simultaneously used to differentiate a fire condition, in response to the differentiation of which, the same controller activates a fire suppression mechanism.

No. of Pages : 37 No. of Claims : 43

(12) PATENT APPLICATION PUBLICATION
(19) INDIA
(22) Date of filing of Application :18/12/2014
(21) Application No.2973/KOLNP/2014 A
(43) Publication Date : 08/05/2015

(54) Title of the invention : THICK-WALLED HIGH-STRENGTH SOUR-RESISTANT LINE PIPE AND METHOD FOR PRODUCING SAME

(51) International classification :C22C38/00,B21C37/08,C21D8/02
(31) Priority Document No :2012-153410
(32) Priority Date :09/07/2012
(33) Name of priority country :Japan
(86) International Application No :PCT/JP2013/002160
Filing Date :29/03/2013
(87) International Publication No :WO 2014/010150
(61) Patent of Addition to Application Number :NA
Filing Date :NA
(62) Divisional to Application Number :NA
Filing Date :NA

(71)**Name of Applicant :**
1)JFE STEEL CORPORATION
Address of Applicant :2-3, Uchisaiwai-cho, 2-chome, Chiyoda-ku, Tokyo 1000011 JAPAN
(72)**Name of Inventor :**
1)TANIZAWA, Akihiko
2)NAKAMICHI, Haruo
3)KAWANAKA, Toru
4)UCHITOMI, Noriaki
5)OZEKI, Takafumi

(57) Abstract :
Provided are a line pipe suitable as a thick- walled high-strength sour-resistant line pipe having a pipe thickness of 20 mm or greater and a tensile strength of 560 MPa or higher, and a method for producing the line pipe. In this line pipe, the base material part comprises: specific amounts of C, Si, Mn, P, S, Al, Nb, Ca, N, and O; one or more types of Cu, Ni, Cr, Mo, V, and Ti as (an) optional component(s); and Fe and inevitable impurities as the remainder. In this line pipe : the microstructure in the pipe thickness direction comprises 90% or more bainite in the region from a depth of 2 mm from the inner surface to a depth of 2 mm from the outer surface; the hardness in regions except for the center segregation part is 220 Hv10 or less and the hardness in the center segregation part is 250 Hv10 or less in terms of hardness distribution in the pipe thickness direction; and the major axis of air bubbles, inclusions and inclusion clusters existing in the region from a depth of 1 mm from the inner surface to a position where the depth is 3/16 of the pipe thickness and in the region from a depth of 1 mm from the outer surface to a position where the depth is 13/16 of the pipe thickness in the pipe-thickness direction is 1.5 mm or shorter. A CC slab having the aforementioned composition is hot-rolled under specific conditions and is then subjected to accelerated cooling.

No. of Pages : 47 No. of Claims : 7

(12) PATENT APPLICATION PUBLICATION
(19) INDIA
(22) Date of filing of Application :27/11/2014
(21) Application No.2743/KOLNP/2014 A
(43) Publication Date : 08/05/2015

(54) Title of the invention : METHOD FOR TREATING OILY SKIN

(51) International classification :A61K8/25,A61Q19/00,A61K8/02
(31) Priority Document No :1255548
(32) Priority Date :13/06/2012
(33) Name of priority country :France
(86) International Application No :PCT/IB2013/054805
Filing Date :12/06/2013
(87) International Publication No :WO 2013/186716
(61) Patent of Addition to Application Number :NA
Filing Date :NA
(62) Divisional to Application Number :NA
Filing Date :NA

(71)**Name of Applicant :**
1)L'OREAL
Address of Applicant :14 rue Royale, F-75008 Paris FRANCE
(72)**Name of Inventor :**
1)KANOUN-COPY, Leïla
2)MULLER, Benoit

(57) Abstract :
The present invention relates to a method for the cosmetic (non-therapeutic) treatment of oily skin, comprising the steps consisting in: a)exposing the oily skin to a first quasi-monochromatic light of artificial origin having a dominant wavelength peak between 300 and 700 nm, better still between 400 and 600 nm, even better still between 560 and 620 nm, and in particular of around 590 nm, and b)applying to the oily skin a cosmetic composition comprising at least 1% by weight of hollow particles and preferably from 2% to 6% by weight of hollow particles, relative to the total weight of said composition, the hollow particles being hydrophobic silica aerogel particles.

No. of Pages : 33 No. of Claims : 15

(12) PATENT APPLICATION PUBLICATION
(19) INDIA
(22) Date of filing of Application :27/11/2014
(21) Application No.2744/KOLNP/2014 A
(43) Publication Date : 08/05/2015

(54) Title of the invention : AERATION EQUIPMENT

(51) International classification :B01F3/04,B01F5/00,C02F3/20
(31) Priority Document No :2012-115201
(32) Priority Date :21/05/2012
(33) Name of priority country :Japan
(86) International Application No :PCT/JP2013/063358
Filing Date :14/05/2013
(87) International Publication No :WO 2013/175994
(61) Patent of Addition to Application Number :NA
Filing Date :NA
(62) Divisional to Application Number :NA
Filing Date :NA

(71)**Name of Applicant :**
1)SOLACE CO., LTD.
Address of Applicant :804-5, Kamitenjin-cho, Takamatsu-shi, Kagawa 7618056 JAPAN
(72)**Name of Inventor :**
1)MASUDA Yasuhiko
2)MASUDA Hiroyasu

(57) Abstract :
[Problem] To provide aeration equipment that breaks gas that has been released in a liquid into fine bubbles so as to uniformly disperse the gas, and efficiently stirs the liquid. [Solution] Aeration equipment (1) is provided with: a main body (10) that is formed in a cylindrical shape with both ends open, and has an inner flow passage with a pentagonal cross section; blade members (24) disposed in multiple stages in the inner flow passage, said blade members having different orientations; and an injection nozzle (32) disposed on one of the open ends of the main body (10). The injection nozzle (32) is immersed in a liquid, with the main body (10) made to stand upright in such a manner that the injection nozzle (32) is at the bottom, and gas is injected inside the main body from the injection nozzle (32) so as to disperse the gas. The center line (C) of an injection port (32a) formed at the tip of the injection nozzle (32): intersects the inner flow passage at a position lower than the blade member (24) positioned at the lowest stage; and is positioned in such a manner that the angle formed between the center line (C) and the vertical direction is not more than 45 degrees.

No. of Pages : 22 No. of Claims : 4

(12) PATENT APPLICATION PUBLICATION
(19) INDIA
(22) Date of filing of Application :27/11/2014
(21) Application No.2745/KOLNP/2014 A
(43) Publication Date : 08/05/2015

(54) Title of the invention : METHODS TO DETECT A FUNGAL CELL

(51) International classification :A61K49/00
(31) Priority Document No :61/644,283
(32) Priority Date :08/05/2012
(33) Name of priority country :U.S.A.
(86) International Application No :PCT/US2013/040182
Filing Date :08/05/2013
(87) International Publication No :WO 2013/169932
(61) Patent of Addition to Application Number :NA
Filing Date :NA
(62) Divisional to Application Number :NA
Filing Date :NA

(71)**Name of Applicant :**
1)RUTGERS, THE STATE UNIVERSITY OF NEW JERSEY
Address of Applicant :1 World's Fair Drive Somerset, NJ 08873 UNITED STATES OF AMERICA
(72)**Name of Inventor :**
1)PERLIN, David, S.
2)GARCIA-EFFRON, Guillermo
3)MUSTAEV, Arkady

(57) Abstract :
The present invention relates to targeting agents and methods: of using the targeting agents to detect a fungal cell in a subject.

No. of Pages : 24 No. of Claims : 21

(12) PATENT APPLICATION PUBLICATION
(21) Application No.2971/KOLNP/2014 A
(19) INDIA
(22) Date of filing of Application :18/12/2014
(43) Publication Date : 08/05/2015

(54) Title of the invention : STABILIZER BRACKET AND SHOCK ABSORBER

(51) International classification :B60G13/06,B60G21/055
(31) Priority Document No :P2012-204109
(32) Priority Date :18/09/2012
(33) Name of priority country :Japan
(86) International Application No :PCT/JP2013/073384
Filing Date :30/08/2013
(87) International Publication No :WO 2014/045845
(61) Patent of Addition to Application Number :NA
Filing Date :NA
(62) Divisional to Application Number :NA
Filing Date :NA

(71)**Name of Applicant :**
1)KAYABA INDUSTRY CO. LTD.
Address of Applicant :World Trade Center Bldg., 4-1, Hamamatsu-cho 2-chome, Minato-ku, Tokyo 105-6111, JAPAN
(72)**Name of Inventor :**
1) Shotaro ASAOKA

(57) Abstract :
A stabilizer bracket (A) is provided with: a connection section (1) which is affixed to the outer peripheral surface of the outer cylinder (T),of a shock absorber or to the outer peripheral surface of a cylindrical body (N) mounted to the outer cylinder (T); and a mounting section (2) which is continuous with the connection section (1) and which has a stabilizer mounting hole (22) formed therein. The connection section (1) has an axial connection part (10) which is affixed in an upstanding position to the outer peripheral surface of either the outer cylinder (T) or the cylindrical body (N) and which is disposed along the axial direction of either the outer cylinder (T) or the cylindrical body (N). The mounting section (2) has: an extension part (20) which extends to one axial side of either the outer cylinder (T) or the cylindrical body (N) from the axial connection part (10); and a mounting part (21) which extends in a tilted position from the end of the extension part (20) which is located on the side opposite the shock absorber. The hole (22) is formed in the mounting part (21).

No. of Pages : 23 No. of Claims : 11

(12) PATENT APPLICATION PUBLICATION
(21) Application No.2870/KOLNP/2014 A
(19) INDIA
(22) Date of filing of Application :09/12/2014
(43) Publication Date : 08/05/2015

(54) Title of the invention : SOLVENT EXTRACTION SETTLER COMPRISING A FOUNDATION

(51) International classification :B01D11/00,C22B3/00,B03B5/60
(31) Priority Document No :20125714
(32) Priority Date :26/06/2012
(33) Name of priority country :Finland
(86) International Application No :PCT/FI2013/050637
Filing Date :12/06/2013
(87) International Publication No :WO 2014/001619
(61) Patent of Addition to Application Number :NA
Filing Date :NA
(62) Divisional to Application Number :NA
Filing Date :NA

(71)**Name of Applicant :**
1)OUTOTEC (FINLAND) OY
Address of Applicant :Rauhalanpuisto 9 FI-02230 Espoo FINLAND
(72)**Name of Inventor :**
1)VAARNO, Jussi
2)SAARIO, Rami
3)FREDRIKSSON, Henri

(57) Abstract :
A solvent extraction settler (1) comprising a foundation (2). The solvent extraction settler (1) comprises self-supporting modules (3) each having the exterior dimensions, strength and corner fittings (4) conforming to shipping container standards. The foundation (2) comprises a plurality of pillars (5) on which the modules (3) are supported at a height above the ground level, thereby providing a space for piping and access below the settler. The pillars (5) comprise shipping standard compatible container lashing fittings (6, 7) to which the corner fittings (4) of the modules (3) can be connected.

No. of Pages : 13 No. of Claims : 7

(12) PATENT APPLICATION PUBLICATION
(21) Application No.2871/KOLNP/2014 A
(19) INDIA
(22) Date of filing of Application :09/12/2014
(43) Publication Date : 08/05/2015

(54) Title of the invention : SHEET GLASS MATERIAL DIVIDING DEVICE

(51) International classification :C03B33/023
(31) Priority Document No :NA
(32) Priority Date :NA
(33) Name of priority country :NA
(86) International Application No :PCT/JP2012/003385
Filing Date :24/05/2012
(87) International Publication No :WO 2013/175535
(61) Patent of Addition to Application Number :NA
Filing Date :NA
(62) Divisional to Application Number :NA
Filing Date :NA

(71)**Name of Applicant :**
1)KAWASAKI JUKOGYO KABUSHIKI KAISHA
Address of Applicant :1-1, Higashikawasaki-cho 3-chome, Chuo-ku, Kobe-shi, Hyogo 6508670 JAPAN
(72)**Name of Inventor :**
1)KIRITOSHI, Takanori
2)SATO, Makoto
3)TSUJITA, Keiji

(57) Abstract :
A dividing device (10) with which it is capable of obtaining a sheet glass of a predetermined dimension by stably dividing glass material edge parts including bead parts is configured by being provided with: a conveyor (20) which disposes a sheet glass material (1) in a prescribed position; retreating rollers (81) which support widthwise edge parts of the sheet glass material (1) disposed on the conveyor (20) from below; holders (70) which hold the sheet glass material (1) at positions inside and outside dividing lines formed on the widthwise edge parts of the sheet glass material (1); cutting bases (30) which support the dividing line positions of the sheet glass material (1) disposed on the conveyor (20) from below; scribers (50) which are equipped with a cutter (52) that forms a dividing line on the top face of the sheet glass material (1) at a position opposing the cutting base (30); dividers (40) which retract the cutters (52) of the scribers (50), push up the cutting bases (30) and divide the sheet glass material (1) at the dividing lines; and dischargers (80) which discharge the glass material edge parts divided by the dividers (40) below by retreating the retreating rollers (81).

No. of Pages : 42 No. of Claims : 9

(12) PATENT APPLICATION PUBLICATION
(21) Application No.2872/KOLNP/2014 A
(19) INDIA
(22) Date of filing of Application :09/12/2014
(43) Publication Date : 08/05/2015

(54) Title of the invention : FREQUENCY AND DIRECTION-DEPENDENT AMBIENT SOUND HANDLING IN PERSONAL AUDIO DEVICES HAVING ADAPTIVE NOISE CANCELLATION (ANC)

(51) International classification :G10K11/178
(31) Priority Document No :61/645,244
(32) Priority Date :10/05/2012
(33) Name of priority country :U.S.A.
(86) International Application No :PCT/US2013/037049
Filing Date :18/04/2013
(87) International Publication No :WO 2013/169453
(61) Patent of Addition to Application Number :NA
Filing Date :NA
(62) Divisional to Application Number :NA
Filing Date :NA

(71)**Name of Applicant :**
1)CIRRUS LOGIC, INC.
Address of Applicant :800 W 6th St, Austin, TX 78701 UNITED STATES OF AMERICA
(72)**Name of Inventor :**
1)ALDERSON, Jeffrey
2)HENDRIX, Jon, D.
3)ZHOU, Dayong

(57) Abstract :
A personal audio device, such as a wireless telephone, includes noise canceling circuit W(z) that adaptivcly generates an anti-noise signal from a reference microphone signal (ref) and injects the anti- noise signal into the speaker or other transducer output to cause cancellation of ambient audio sounds. An error microphone (err) may also be provided proximate the speaker to measure the output of the transducer in order to control the adaptation of the anti-noise signal and to estimate an electro-acoustical path (SE) from the noise canceling circuit through the transducer. A processing circuit that performs the adaptive noise canceling function also detects frequency-dependent characteristics (54) in and/or direction of the ambient sounds and alters adaptation of the noise canceling circuit in response to the detection.

No. of Pages : 37 No. of Claims : 48

(12) PATENT APPLICATION PUBLICATION
(19) INDIA
(22) Date of filing of Application :18/12/2014
(21) Application No.2981/KOLNP/2014 A
(43) Publication Date : 08/05/2015

(54) Title of the invention : NICOTINAMIDE DERIVATE IN THE TREATMENT OF ACUTE CORONARY SYNDROME

(51) International classification :A61K31/455,A61P9/10,A61K9/00
(31) Priority Document No :61/672,439
(32) Priority Date :17/07/2012
(33) Name of priority country :U.S.A.
(86) International Application No :PCT/US2013/049703
Filing Date :09/07/2013
(87) International Publication No :WO 2014/014706
(61) Patent of Addition to Application Number :NA
Filing Date :NA
(62) Divisional to Application Number :NA
Filing Date :NA

(71)**Name of Applicant :**
1)GLAXOSMITHKLINE LLC
Address of Applicant :Corporation Service Company, 2711 Centerville Road, Suite 400, Wilmington, Delaware 19808 UNITED STATES OF AMERICA
(72)**Name of Inventor :**
1)GHIRARDI, Michele
2)GREENHALGH, David
3)SPRECHER, Dennis, L.
4)WILLETTE, Robert, Nicholas

(57) Abstract :
The use of nicotinamide derivative in the treatment acute coronary syndrome (ACS) and pharmaceutical compositions used in such treatment.

No. of Pages : 17 No. of Claims : 18

(12) PATENT APPLICATION PUBLICATION
(19) INDIA
(22) Date of filing of Application :18/12/2014
(21) Application No.2982/KOLNP/2014 A
(43) Publication Date : 08/05/2015

(54) Title of the invention : METHOD FOR OPERATING A MULTI-PHASE PUMP AND APPARATUS THEREFOR

(51) International classification :F04D31/00,B01D21/00,B01D21/24
(31) Priority Document No :10 2012 015 064.4
(32) Priority Date :31/07/2012
(33) Name of priority country :Germany
(86) International Application No :PCT/EP2013/002260
Filing Date :31/07/2013
(87) International Publication No :WO 2014/019687
(61) Patent of Addition to Application Number :NA
Filing Date :NA
(62) Divisional to Application Number :NA
Filing Date :NA

(71)**Name of Applicant :**
1)ITT BORNEMANN GMBH
Address of Applicant :Industriestrasse 2, 31683 Obernkirchen GERMANY
(72)**Name of Inventor :**
1)ROHLFING, Gerhard
2)BRANDT, Jens-Uwe

(57) Abstract :
The invention concerns a method and an apparatus for operating a multi-phase pump which has a suction side inlet (10) and a discharge side outlet (20) and which pumps a multi-phase mixture charged with solids, comprising the following steps: a. pumping a multi phase mixture into a discharge side separation chamber (45), b. separating a gaseous phase from a liquid phase and a solid phase in the separation chamber (45, c. separating the liquid phase from the solid phase in the separation chamber (45), d. feeding a portion of the liquid phase released from the solid phase to the suction side.

No. of Pages : 26 No. of Claims : 24

(12) PATENT APPLICATION PUBLICATION
(21) Application No.2668/KOLNP/2014 A
(19) INDIA
(22) Date of filing of Application :21/11/2014
(43) Publication Date : 08/05/2015

(54) Title of the invention : RADIO BASE STATION APPARATUS, MOBILE STATION APPARATUS AND WIRELESS COMMUNICATION METHOD

(51) International classification :H04J99/00
(31) Priority Document No :2009-063594
(32) Priority Date :16/03/2009
(33) Name of priority country :Japan
(86) International Application No :PCT/JP2010/054397
Filing Date :16/03/2010
(87) International Publication No :WO2010/107013
(61) Patent of Addition to Application Number :NA
Filing Date :NA
(62) Divisional to Application Number :3770/KOLNP/2011
Filed on :13/09/2011

(71)**Name of Applicant :**
1)NTT DOCOMO INC.
Address of Applicant :11-1, NAGATACHO 2-CHOME, CHIYODA-KU, TOKYO 100-6150 JAPAN
(72)**Name of Inventor :**
1)KISHIYAMA, YOSHIHISA
2)TAOKA, HIDEKAZU
3)SAWAHASHI, MAMORU

(57) Abstract :
A radio base station apparatus comprising: a plurality of transmission antennas; an orthogonalizing section configured to orthogonalize downlink reference signals allocated to a plurality of radio resources of same frequency and different time regions, between layers by using orthogonal codes; and a transmission section configured to transmit a signal that is multiplexed with the downlink reference signals and transmission data, from the plurality of transmission antennas in multiple layers, wherein sequence information of the downlink reference signals and information of the orthogonal codes are signaled to a mobile station apparatus.

No. of Pages : 66 No. of Claims : 6

(12) PATENT APPLICATION PUBLICATION
(21) Application No.2669/KOLNP/2014 A
(19) INDIA
(22) Date of filing of Application :21/11/2014
(43) Publication Date : 08/05/2015

(54) Title of the invention : WIDE AREA TRANSPORT NETWORKS FOR MOBILE RADIO ACCESS NETWORKS AND METHODS OF USE

(51) International classification :G01S19/14
(31) Priority Document No :1254139
(32) Priority Date :04/05/2012
(33) Name of priority country :France
(86) International Application No :PCT/US2013/039338
Filing Date :02/05/2013
(87) International Publication No :WO 2013/166331
(61) Patent of Addition to Application Number :NA
Filing Date :NA
(62) Divisional to Application Number :NA
Filing Date :NA

(71)**Name of Applicant :**
1)E-BLINK
Address of Applicant :E-Blink, 3/5 Rue Marcel Pagnol, Z.I. Clos Auchin, F-91800 Boussy Saint Antoine FRANCE
(72)**Name of Inventor :**
1)LEROUDIER, Frederic
2)ROLLAND, ALAIN
3)BITTAR, CHRISTIAN
4)ELSAYED, JAWAD
5)PLUMECOQ, JEAN-CHRISTOPHE
6)BELLOT, LAURENT
7)BLANC, STEPHANE
8)BOUKOUR, TARIQ

(57) Abstract :
Wide area transport networks for mobile Radio Access Networks, and methods of use are provided herein. An exemplary wide area transport network may include a plurality of network segments that include at least one wireline network and at least one wireless network communicatively coupled with one another. Each of the plurality of network segments may be configured to transmit at least one of a plurality of signals communicated between a baseband module and a wireless transceiver.

No. of Pages : 55 No. of Claims : 23

(12) PATENT APPLICATION PUBLICATION
(19) INDIA
(22) Date of filing of Application :19/12/2014
(21) Application No.2992/KOLNP/2014 A
(43) Publication Date : 08/05/2015

(54) Title of the invention : HOLDER FOR A MEDICAL IN PARTICULAR A SURGICAL INSTRUMENT

(51) International classification :A61B17/00,A61B17/14,A61B17/16
(31) Priority Document No :12177714.8
(32) Priority Date :24/07/2012
(33) Name of priority country :EPO
(86) International Application No :PCT/EP2013/060736
Filing Date :24/05/2013
(87) International Publication No :WO 2014/016011
(61) Patent of Addition to Application Number :NA
Filing Date :NA
(62) Divisional to Application Number :NA
Filing Date :NA

(71)**Name of Applicant :**
1)WALDEMAR LINK GmbH & Co. KG
Address of Applicant :Barkhausenweg 10, 22339 Hamburg GERMANY
(72)**Name of Inventor :**
1)DMUSCHEWSKY, Klaus
2)BALZARINI, Amos
3)FREISBERG, Dörte

(57) Abstract :
The invention relates to a holder for a medical, in particular a surgical instrument, having a quick coupling (3) for receiving a connection end (A), having an undercut (D), of an instrument shaft of the medical instrument, wherein the quick coupling (3) has a first coupling element (26) having a first axial through-hole (5) for the connection end (A). In order to design said holder so that it has a simplified structure in comparison to conventional holders and is easy to clean and sterilize in common aftercare, according to the invention, the quick coupling (3) in said holder has a second coupling element (13) having a second axial through-hole (20) for the connection end (A), wherein said second coupling element (13) is movable relative to the first coupling element (26) in a direction crosswise to the axial direction (6) of the through-holes (5, 20) from a locked position, in which the first and the second through-holes (5, 20) are offset relative to each other so that an edge (24) of the second through-hole (20) engages behind the undercut (D) on the connection end (A) of the instrument shaft in a locking manner, to a release position, in which the first (5) and the second (20) axial through-holes lie in alignment at least to the extent that the connection end (A) can be freely guided through both through-holes (5, 20). Additionally, the first (26) and the second (13) coupling element are connected to each other in one piece via a spring bridge (15) and the spring bridge (15) preloads the first (26) and the second (13) coupling element relative to each other into the locked position.

No. of Pages : 22 No. of Claims : 11

(12) PATENT APPLICATION PUBLICATION
(19) INDIA
(22) Date of filing of Application :19/12/2014

(21) Application No.2993/KOLNP/2014 A
(43) Publication Date : 08/05/2015

(54) Title of the invention : INDOLECARBONITRILES AS SELECTIVE ANDROGEN RECEPTOR MODULATORS

(51) International classification	:C07D401/06,A61K31/40,A61K31/44
(31) Priority Document No	:61/672,455
(32) Priority Date	:17/07/2012
(33) Name of priority country	:U.S.A.
(86) International Application No	:PCT/IB2013/001530
Filing Date	:15/07/2013
(87) International Publication No	:WO 2014/013309
(61) Patent of Addition to Application Number	:NA
Filing Date	:NA
(62) Divisional to Application Number	:NA
Filing Date	:NA

(71)**Name of Applicant :**
1)GLAXOSMITHKLINE INTELLECTUAL PROPERTY (NO.2) LIMITED
Address of Applicant :980 Great West Road, Brentford, Middlesex TW8 9GS UNITED KINGDOM
(72)**Name of Inventor :**
1)TURNBULL, Philip, Stewart
2)CADILLA, Rodolfo

(57) Abstract :
This invention relates to non-steroidal compounds that are modulators of androgen receptor, and also to the methods for the making and use of such compounds.

No. of Pages : 90 No. of Claims : 18

(12) PATENT APPLICATION PUBLICATION
(21) Application No.2996/KOLNP/2014 A
(19) INDIA
(22) Date of filing of Application :22/12/2014
(43) Publication Date : 08/05/2015

(54) Title of the invention : NOZZLE PLATE, METHOD OF MANUFACTURING NOZZLE PLATE, INKJET HEAD, AND INKJET PRINTING APPARATUS

(51) International classification	:B41J 2/135,B05C 5/00
(31) Priority Document No	:2012-170502
(32) Priority Date	:31/07/2012
(33) Name of priority country	:Japan
(86) International Application No	:PCT/JP2013/070255
Filing Date	:19/07/2013
(87) International Publication No	:WO 2014/021200
(61) Patent of Addition to Application Number	:NA
Filing Date	:NA
(62) Divisional to Application Number	:NA
Filing Date	:NA

(71)**Name of Applicant :**
1)RICOH COMPANY, LTD.
Address of Applicant :3-6, NAKAMAGOME 1-CHOME, OHTA-KU, TOKYO, 1438555 JAPAN
(72)**Name of Inventor :**
1)UEDA, NAOYUKI
2)NAKAMURA, YUKI
3)ABE, YUKIKO
4)MATSUMOTO, SHINJI
5)SONE, YUJI
6)TAKADA, MIKIKO
7)SAOTOME, RYOICHI

(57) Abstract :
A nozzle plate having a nozzle hole that penetrates through the nozzle plate in a thickness direction is disclosed. The nozzle plate includes a discharge outlet that is formed at the nozzle hole, and provided curvatures of four corner portions of an opening shape of the discharge outlet are denoted as R1, R2, R3, and R4, the opening shape of the discharge outlet is configured to approximate the equation $R1=R2 \geq R3=R4 \approx 0$.

No. of Pages : 67 No. of Claims : 14

(12) PATENT APPLICATION PUBLICATION
(19) INDIA
(22) Date of filing of Application :24/11/2014
(21) Application No.2681/KOLNP/2014 A
(43) Publication Date : 08/05/2015

(54) Title of the invention : STANDALONE WEARABLE PROTECTOR AND PROTECTIVE CLOTHING ASSEMBLY

(51) International classification :A41D13/018,A41D13/05
(31) Priority Document No :TV2012A000084
(32) Priority Date :15/05/2012
(33) Name of priority country :Italy
(86) International Application No :PCT/IB2013/053928
Filing Date :14/05/2013
(87) International Publication No :WO 2013/171674
(61) Patent of Addition to Application Number :NA
Filing Date :NA
(62) Divisional to Application Number :NA
Filing Date :NA

(71)**Name of Applicant :**
1)ALPINESTARS RESEARCH SRL
Address of Applicant :Via A. De Gasperi, 54, I-31010 Coste di Maser (Treviso) ITALY
(72)**Name of Inventor :**
1)MAZZAROLO, Giovanni
2)SIGNORELLI, Marco

(57) Abstract :
The present invention relates to a standalone wearable protector 1, comprising: a thin layer supporting fabric 2, at least one inflatable bag 13 housed in a seat 19 provided in said supporting fabric 2, at least one gas generator 12 acting as inflating means connected to said inflatable bag 13 and fastened directly or indirectly to said supporting fabric 2, a control unit 10 also fastened directly or indirectly to said supporting fabric 2 and suitable for activating said inflating means 12 and sensing means 5 connected to said control unit 10 and provided on said supporting fabric 2. The present invention also relates to a protective clothing assembly comprising a protective garment 30, 50 made of material resistant to abrasion and friction stresses and said standalone wearable protector 1.

No. of Pages : 29 No. of Claims : 16

(12) PATENT APPLICATION PUBLICATION
(19) INDIA
(22) Date of filing of Application :22/12/2014
(21) Application No.3002/KOLNP/2014 A
(43) Publication Date : 08/05/2015

(54) Title of the invention : RECYCLE OF TITANIUM DIBORIDE MATERIALS

(51) International classification :C01G 23/02,C01B35/04
(31) Priority Document No :61/656,357
(32) Priority Date :06/06/2012
(33) Name of priority country :U.S.A.
(86) International Application No :PCT/US2013/044283
Filing Date :05/06/2013
(87) International Publication No :WO 2013/184779
(61) Patent of Addition to Application Number :NA
Filing Date :NA
(62) Divisional to Application Number :NA
Filing Date :NA

(71)**Name of Applicant :**
1)ALCOA INC.
Address of Applicant :ALCOA CORPORATE CENTER, 201 ISABELLA STREET, PITTSBURGH, PENNSYLVANIA 15212-5858 UNITED STATES OF AMERICA
(72)**Name of Inventor :**
1)WAVER, MARK L.
2)SCHNITGEN, ANDREW L.
3)DIMILIA, ROBERT A.
4)PHELPS, FRANKIE E.
5)MCMILLEN, JAMES C.

(57) Abstract :
A method to recycle TiB2 articles, and in particular, a method to recycle a TiB2 feedstock including TiB2 articles and Ti-ore and/or Ti-slag by chlorination.

No. of Pages : 30 No. of Claims : 41

(12) PATENT APPLICATION PUBLICATION
(19) INDIA
(22) Date of filing of Application :22/12/2014
(21) Application No.3003/KOLNP/2014 A
(43) Publication Date : 08/05/2015

(54) Title of the invention : SUB-COOLING SYSTEM OF A COMPRESSION-REFRIGERATION SYSTEM

(51) International classification	:F25B17/08,F25B40/02,F25B27/02
(31) Priority Document No	:1202025
(32) Priority Date	:17/07/2012
(33) Name of priority country	:France
(86) International Application No	:PCT/FR2013/000188
Filing Date	:16/07/2013
(87) International Publication No	:WO 2014/013145
(61) Patent of Addition to Application Number	:NA
Filing Date	:NA
(62) Divisional to Application Number	:NA
Filing Date	:NA

(71)**Name of Applicant :**
1)COLDWAY
Address of Applicant :Lieu-dit Patau, Route de Rivesaltes, F-66380 Pia FRANCE
(72)**Name of Inventor :**
1)RIGAUD, Laurent
2)KINDBEITER, Francis

(57) Abstract :
The present invention relates to a refrigeration facility and a method for maintaining the temperature of an isothermal enclosure (3) including: a refrigerating unit (5) comprising a compressor (7) driven by a heat engine (8) and an evaporator (13); and a thermochemical cooling system (15) including a vessel (23) containing a liquefied gas capable, after evaporation, of combining with a reactive product, consisting of a mixture of a reactive salt and natural expanded graphite, contained in a reactor (17), the reaction product obtained being capable of being regenerated by a heating means, said cooling system including an evaporator (25) and a condenser (21). The facility is characterised in that: the evaporator (25) of said cooling system is in thermal contact with the refrigerant circuit of the refrigerating unit (5) upstream from the evaporator (13) thereof; the reactor of the cooling system is in thermal contact with a heating means using the heat energy dissipated by the heat engine during the operation thereof; the natural expanded graphite used has an apparent density of 100 to 120 kg/m3; and the weight percentage of the salt in the reactive product is of 50 % to 75 %.

No. of Pages : 19 No. of Claims : 8

(12) PATENT APPLICATION PUBLICATION
(21) Application No.3006/KOLNP/2014 A
(19) INDIA
(22) Date of filing of Application :22/12/2014
(43) Publication Date : 08/05/2015

(54) Title of the invention : ENCLOSURE REFRIGERATED BY A HYBRID COMPRESSION/ABSORPTION REFRIGERATION SYSTEM

(51) International classification :F25B17/08,F25B35/04
(31) Priority Document No :1202024
(32) Priority Date :17/07/2012
(33) Name of priority country :France
(86) International Application No :PCT/FR2013/000189
Filing Date :16/07/2013
(87) International Publication No :WO 2014/013146
(61) Patent of Addition to Application Number :NA
Filing Date :NA
(62) Divisional to Application Number :NA
Filing Date :NA

(71)**Name of Applicant :**
1)COLDWAY
Address of Applicant :Lieu-dit Patau, Route de Rivesaltes, F-66380 Pia FRANCE
(72)**Name of Inventor :**
1)RIGAUD, Laurent
2)KINDBEITER, Francis

(57) Abstract :
The present invention relates to an enclosure which is refrigerated and kept at a predetermined set temperature (Te), containing the evaporator (7) of a refrigerating unit (5). Said enclosure is characterised in that: same comprises a thermochemical system (9) the circuit of which is separate from that of the refrigerating unit and which includes a reactor (1) containing a reactive product capable of absorbing a gas, a condenser and an evaporator arranged in said enclosure (3), the reactive product and the gas being such as to be the subject, when placed in the presence of one another, of a reaction which has the effect of the gas being absorbed by the reactive product and, conversely, to be the subject of a desorption reaction of the gas absorbed by the reactive product when heat is applied thereto once the gas has been absorbed, the thermochemical system having two operating phases, namely a cold-production phase and a regeneration phase, said system comprising measurement (14) and control (19) means which only enable the thermochemical system (9) to enter the regeneration phase if the temperature of the condenser (17) thereof is below a predetermined threshold temperature (Ts).

No. of Pages : 19 No. of Claims : 11

(12) PATENT APPLICATION PUBLICATION
(19) INDIA
(22) Date of filing of Application :16/12/2014
(21) Application No.2953/KOLNP/2014 A
(43) Publication Date : 08/05/2015

(54) Title of the invention : VEHICLE BODYWORK AND METHOD OF CONSTRUCTING THE VEHICLE

(51) International classification :B62D23/00,B62D27/02
(31) Priority Document No :1212206.5
(32) Priority Date :10/07/2012
(33) Name of priority country :U.K.
(86) International Application No :PCT/EP2013/064250
Filing Date :05/07/2013
(87) International Publication No :WO 2014/009271
(61) Patent of Addition to Application Number :NA
Filing Date :NA
(62) Divisional to Application Number :NA
Filing Date :NA

(71)**Name of Applicant :**
1)GORDON MURRAY DESIGN LIMITED
Address of Applicant :Wharfside, Broadford Park, Shalford Surrey GU4 8EP UNITED KINGDOM
(72)**Name of Inventor :**
1)JONES, Mark, Andrew
2)LETT, Barry

(57) Abstract :
A laser-cut and spot-welded tubular frame chassis typically has an accuracy of ±1.5mm. To allow positioning of exterior body panels to an accuracy of ±0.2mm we propose that the vehicle comprise one or more integration panels, lying between the tubular framework and the exterior body panels. These can be made of a lightweight material, and can be made to be structural or non-structural depending on the intended use and location of the panel. It can also be attached adhesively to the framework at an early stage of manufacture. A jig with a suitable datum point can hold the integration panels while the adhesive sets, or a robotic arm or the like can hold the panel in the correct position. An adhesive thickness of about 3mm will allow chassis tolerances of ±1.5mm in any direction to be accommodated. The exterior body panels can then be attached to the integration panels in any preferred manner, such as adhesives, bolts, clips or the like. This attachment is preferably non-adhesive, and can therefore be done at a late stage in manufacture after much of the interior work has been done. The integration panel will also provide a convenient point for providing fittings and fixings for ancillaries within the vehicle such as brake lines, wiring, NVH panels and the like. A moulded integration panel can be formed with appropriate fitting and fixings as necessary. This will also reduce the number of brackets and the like which need to be welded to the framework, reducing the energy cost of the vehicle manufacturing process.

No. of Pages : 11 No. of Claims : 13

(12) PATENT APPLICATION PUBLICATION
(19) INDIA
(22) Date of filing of Application :16/12/2014
(21) Application No.2955/KOLNP/2014 A
(43) Publication Date : 08/05/2015

(54) Title of the invention : ARTICULATING SURGICAL INSTRUMENTS AND METHODS OF DEPLOYING THE SAME

(51) International classification :A61B17/00,A61B17/29,A61B17/34
(31) Priority Document No :61/656,600
(32) Priority Date :07/06/2012
(33) Name of priority country :U.S.A
(86) International Application No :PCT/US2013/043858
Filing Date :03/06/2013
(87) International Publication No :WO 2013/184560
(61) Patent of Addition to Application Number :NA
Filing Date :NA
(62) Divisional to Application Number :NA
Filing Date :NA

(71)**Name of Applicant :**
1)MEDROBOTICS CORPORATION
Address of Applicant :475 Paramount Drive, Raynham, Massachusetts 02767 UNITED STATES OF AMERICA
(72)**Name of Inventor :**
1)CASTRO, Michael Salvatore
2)OYOLA, Arnold
3)FLAHERTY, J. Christopher

(57) Abstract :
A surgical tool comprises an elongated first assembly and an elongated second assembly. The second assembly comprises an elongated support element, an elongated activation element moveable relative to the support element, and a functional mechanism coupled to the activation element. A movement of the functional mechanism is in response to a movement of the activation element. A force imparted by the movement of the activation element is isolated from the first assembly by the support element.

No. of Pages : 108 No. of Claims : 285

(12) PATENT APPLICATION PUBLICATION
(19) INDIA
(22) Date of filing of Application :16/12/2014
(21) Application No.2956/KOLNP/2014 A
(43) Publication Date : 08/05/2015

(54) Title of the invention : PHYSICAL LAYER MANAGEMENT FOR AN ACTIVE OPTICAL MODULE

(51) International classification :G02B6/28,G02B6/36,H04B10/25
(31) Priority Document No :61/663,907
(32) Priority Date :25/06/2012
(33) Name of priority country :U.S.A.
(86) International Application No :PCT/US2013/047462
Filing Date :25/06/2013
(87) International Publication No :WO 2014/004421
(61) Patent of Addition to Application Number :NA
Filing Date :NA
(62) Divisional to Application Number :NA
Filing Date :NA

(71)**Name of Applicant :**
1)ADC TELECOMMUNICATIONS, INC.
Address of Applicant :1187 Park Place, Shakopee, Minnesota 55379 UNITED STATES OF AMERICA
(72)**Name of Inventor :**
1)COFFEY, Joseph C.
2)PATEL, Kamlesh G.
3)RESSLER, Kevin Glenn
4)COBURN, Hutch

(57) Abstract :
Embodiments described herein are directed to a cable assembly including at least a first optical fiber extending from a first end to a second end and an active optical module (AOM) attached to the first end of the first optical fiber and including a first storage device that is electrically connected to the electrical connector. The cable assembly also includes a passive optical connector terminating the second end of the first optical fiber and including a second storage device. The first storage device includes an AOM identifier stored therein identifying the active optical module and the second storage device includes first information stored therein indicating that the first end of the first optical fiber is associated with the AOM identifier.

No. of Pages : 56 No. of Claims : 33

(12) PATENT APPLICATION PUBLICATION
(21) Application No.2957/KOLNP/2014 A
(19) INDIA
(22) Date of filing of Application :16/12/2014
(43) Publication Date : 08/05/2015

(54) Title of the invention : A COMPOSITION IN THE FORM OF A DISPERSION COMPRISING A LIGNIN, A METHOD FOR THE MANUFACTURING THEREOF AND USE THEREOF

(51) International classification	:C08L97/02,C08G18/00,C08G18/40
(31) Priority Document No	:1250569-9
(32) Priority Date	:01/06/2012
(33) Name of priority country	:Sweden
(86) International Application No	:PCT/IB2013/054464
Filing Date	:30/05/2013
(87) International Publication No	:WO 2013/179251
(61) Patent of Addition to Application Number	:NA
Filing Date	:NA
(62) Divisional to Application Number	:NA
Filing Date	:NA

(71)**Name of Applicant :**
1)STORA ENSO OYJ
Address of Applicant :Kanavaranta 1, FI-00101 Helsinki FINLAND
(72)**Name of Inventor :**
1)GRÜNBAUER, Dr. Henri J.M.

(57) Abstract :
The present invention relates to a composition in the form of a dispersion, a method for the manufacturing of said composition and uses thereof.

No. of Pages : 28 No. of Claims : 18

(12) PATENT APPLICATION PUBLICATION
(19) INDIA
(22) Date of filing of Application :12/12/2014
(21) Application No.2914/KOLNP/2014 A
(43) Publication Date : 08/05/2015

(54) Title of the invention : COMPOUNDS FOR DRY SKIN AND ANTI-AGEING APPLICATION

(51) International classification :A61K8/49,A61Q19/08,A61Q19/00
(31) Priority Document No :1255267
(32) Priority Date :06/06/2012
(33) Name of priority country :France
(86) International Application No :PCT/IB2013/054635
Filing Date :05/06/2013
(87) International Publication No :WO 2013/183017
(61) Patent of Addition to Application Number :NA
Filing Date :NA
(62) Divisional to Application Number :NA
Filing Date :NA

(71)**Name of Applicant :**
1)L'OREAL
Address of Applicant :14 rue Royale, F-75008 Paris FRANCE
(72)**Name of Inventor :**
1)MARAT, Xavier
2)MULLER, Benoit
3)THOMAS-COLLIGNON, Agnes
4)BERNARD, Dominique

(57) Abstract :
The present invention relates to the cosmetic use, as agent for preventing and/or treating an aesthetic defect in the skin and/or its appendages that is associated with an imbalance in the differentiation and/or proliferation of the cells of an epidermis, of an effective amount of at least one compound represented by one of the general formulae, (Ia) or (Ib).

No. of Pages : 45 No. of Claims : 18

(12) PATENT APPLICATION PUBLICATION
(19) INDIA
(22) Date of filing of Application :12/12/2014
(21) Application No.2915/KOLNP/2014 A
(43) Publication Date : 08/05/2015

(54) Title of the invention : PRODRUG DERIVATIVES OF (E)-N-METHYL-N-((3-METHYLBENZOFURAN-2-YL)METHYL)-3-(7-OXO-5, 6, 7, 8-TETRAHYDRO-1, 8- NAPHTHYRIDIN-3-YL)ACRYLAMIDE

(51) International classification :C07F9/6561,A61K31/675,A61P31/04
(31) Priority Document No :61/661,559
(32) Priority Date :19/06/2012
(33) Name of priority country :U.S.A
(86) International Application No :PCT/IB2013/001780
Filing Date :19/06/2013
(87) International Publication No :WO 2013/190384
(61) Patent of Addition to Application Number :NA
Filing Date :NA
(62) Divisional to Application Number :NA
Filing Date :NA

(71)**Name of Applicant :**
1)DEBIOPHARM INTERNATIONAL SA
Address of Applicant :Forum après-demain Ch. Messidor 5-7 CH-1006 Lausanne SWITZERLAND
(72)**Name of Inventor :**
1)PARTRIDGE, John, J.
2)COLUCCI, John
3)GAREAU, Yves
4)THERIEN, Michel
5)ZAMBONI, Robert
6)HAFKIN, Barry
7)MARFAT, Anthony
8)ZAGHDANE, Helmi

(57) Abstract :
In part, the present disclosure is directed to derivatives of (E)-N-methy1-N-((3-methylta 1,8 naphthyndin-3-y1)acrylamide compounds with significant solubility, solid state stability and bioavailability profiles. Said compounds have been found to be effective inhibitors of bacterial fatty acid metabolism via the effective inhibition of FabL hi addition certain compounds are shown to be stable towards gamma radiation sterilization treatments, and are thus well suited to the production of a sterile formulation for use in the treatment of illnesses caused by bacterial infections.

No. of Pages : 88 No. of Claims : 50

(12) PATENT APPLICATION PUBLICATION
(21) Application No.2916/KOLNP/2014 A
(19) INDIA
(22) Date of filing of Application :12/12/2014
(43) Publication Date : 08/05/2015

(54) Title of the invention : MULTI-TENANT DATA INTEGRATION

(51) International classification :G06F 9/44
(31) Priority Document No :61/655,396
(32) Priority Date :04/06/2012
(33) Name of priority country :U.S.A.
(86) International Application No :PCT/US2013/044120
Filing Date :04/06/2013
(87) International Publication No :WO 2013/184684
(61) Patent of Addition to Application Number :NA
Filing Date :NA
(62) Divisional to Application Number :NA
Filing Date :NA

(71)**Name of Applicant :**
1)24/7 CUSTOMER, INC.
Address of Applicant :910 E.HAMILTON AVE.STE.240, CAMPBELL,CA 95008-0610 UNITED STATES OF AMERICA
(72)**Name of Inventor :**
1)SURESH,SRINIVASAN

(57) Abstract :
An enterprise application integration system (EAIS) is disclosed that enables customer service applications to access and share data with enterprise information systems in real time. Also disclosed is a system and method for supporting multi-tenants from a single EAIS. An EAIS can further provide services in different business verticals. Creating objects which are an abstraction of a business flow, and which enable the EAIS to reuse objects enable service to customers quickly.

No. of Pages : 39 No. of Claims : 37

(12) PATENT APPLICATION PUBLICATION
(19) INDIA
(22) Date of filing of Application :23/12/2014
(21) Application No.3028/KOLNP/2014 A
(43) Publication Date : 08/05/2015

(54) Title of the invention : TWO PACK TYPE CURABLE POLYORGANOSILOXANE COMPOSITION AND USE OF SAME

(51) International classification :C08L83/07,C08K3/00,C08L83/05
(31) Priority Document No :2012-141306
(32) Priority Date :22/06/2012
(33) Name of priority country :Japan
(86) International Application No :PCT/JP2013/067116
Filing Date :21/06/2013
(87) International Publication No :WO 2013/191279
(61) Patent of Addition to Application Number :NA
Filing Date :NA
(62) Divisional to Application Number :NA
Filing Date :NA

(71)**Name of Applicant :**
1)MOMENTIVE PERFORMANCE MATERIALS JAPAN LLC
Address of Applicant :2-20, Akasaka 5-chome, Minato-ku, Tokyo 1076112 Japan
(72)**Name of Inventor :**
1)SAKAKIBARA, Makoto
2)ONO, Kazuhisa
3)MATSUSHITA, Shigeki
4)OKAWA, Koji

(57) Abstract :
To provide: a two pack type curable polyorganosiloxane composition having excellent fast curing properties; and a method for producing a bonded body using this two pack type curable polyorganosiloxane composition. A two pack type curable polyorganosiloxane composition which contains (A) an alkenyl group-containing polyorganosiloxane that contains two or more alkenyl groups in each molecule, (B) a polyorganohydrogen siloxane that contains two or more hydrogen atoms, each of which is bonded to a silicon atom, in each molecule, and (C) a platinum system catalyst. The ratio of the number (HB) of hydrogen atoms bonded to silicon atoms in component (B) to the number (ViA) of alkenyl groups in component (A) is 0.5-10.0, and component (C) is contained in an amount of 0.5-2,000 ppm in terms of platinum system metal atoms. This two pack type curable polyorganosiloxane composition is composed of a first component pack and a second component pack; and the first component pack contains components (A) and (C), while the second component pack contains component (B).

No. of Pages : 39 No. of Claims : 12

(12) PATENT APPLICATION PUBLICATION
(19) INDIA
(22) Date of filing of Application :23/12/2014
(21) Application No.3029/KOLNP/2014 A
(43) Publication Date : 08/05/2015

(54) Title of the invention : SPIRAL GASKET

(51) International classification :F16J15/12
(31) Priority Document No :2012-152036
(32) Priority Date :06/07/2012
(33) Name of priority country :Japan
(86) International Application No :PCT/JP2013/068493
Filing Date :05/07/2013
(87) International Publication No :WO 2014/007364
(61) Patent of Addition to Application Number :NA
Filing Date :NA
(62) Divisional to Application Number :NA
Filing Date :NA

(71)**Name of Applicant :**
1)KABUSHIKI KAISHA TOSHIBA
Address of Applicant :1-1, Shibaura 1-chome, Minato-ku, Tokyo 1058001 Japan
2)NIPPON PILLAR PACKING CO.,LTD.
(72)**Name of Inventor :**
1)ASAKURA Daisuke
2)TAKAHASHI Takeo
3)MIYOSHI Takeshi
4)MAEDA Hisashi

(57) Abstract :
[Problem] The purpose of the present invention is to provide a spiral gasket which is less affected by the thermal degradation of the material under high temperature and high pressure conditions than conventional products and which therefore maintains consistent sealing performance for a long period of time. [Solution] A spiral gasket (1) has a seal section (5) formed by winding a metallic hoop material (3) having a bent section (2) in a cross-section thereof, the metallic hoop material (3) being wound in a spiral shape so that the bent section (2) of each winding is superposed on each other, the seal section (5) having a filler material (4) disposed in the radial gap between the windings of the metallic hoop material (3). The spiral gasket (1) is characterized in that at least a part of the filler material (4) in the spiral direction is configured from non-ferrous metal having higher deformability than the metallic hoop material (3).

No. of Pages : 57 No. of Claims : 7

(12) PATENT APPLICATION PUBLICATION
(19) INDIA
(22) Date of filing of Application :15/12/2014
(21) Application No.2927/KOLNP/2014 A
(43) Publication Date : 08/05/2015

(54) Title of the invention : INLINE AGING APPARATUS

(51) International classification :G01R31/28
(31) Priority Document No :10-2012-0064440
(32) Priority Date :15/06/2012
(33) Name of priority country :Republic of Korea
(86) International Application No :PCT/KR2013/005205
Filing Date :12/06/2013
(87) International Publication No :WO 2013/187697
(61) Patent of Addition to Application Number :NA
Filing Date :NA
(62) Divisional to Application Number :NA
Filing Date :NA

(71)**Name of Applicant :**
1)SHINSEKY SYSTEM CO., LTD.
Address of Applicant :628-11 Gojan-ri, Cheongbuk-myeon, Pyeongtaek-si, Gyeonggi-do 451-832 Republic of Korea
(72)**Name of Inventor :**
1)CHO, Yang-yeon

(57) Abstract :
The present invention relates to an inline aging apparatus comprising a main body for forming a space in which an aging process for an aging object is performed; a magazine injection unit which is arranged in an inlet region of the main body and to which a magazine for accommodating multiple aging objects is injected; a heating zone arranged inside the main body to heat the magazine passed through the magazine injection unit to a predetermined temperature range; a cooling zone for cooling the magazine, which is heated by the heating zone, to a room temperature; and a discharge unit for discharging the magazine cooled by the cooling zone.

No. of Pages : 19 No. of Claims : 8

(12) PATENT APPLICATION PUBLICATION
(19) INDIA
(22) Date of filing of Application :15/12/2014
(21) Application No.2928/KOLNP/2014 A
(43) Publication Date : 08/05/2015

(54) Title of the invention : SYSTEM AND METHOD FOR PORTABLE MAGNETIC RESONANCE IMAGING USING A ROTATING ARRAY OF PERMANENT MAGNETS

(51) International classification :A61B5/055
(31) Priority Document No :61/660,278
(32) Priority Date :15/06/2012
(33) Name of priority country :U.S.A.
(86) International Application No :PCT/US2012/061341
Filing Date :22/10/2012
(87) International Publication No :WO 2013/187924
(61) Patent of Addition to Application Number :NA
Filing Date :NA
(62) Divisional to Application Number :NA
Filing Date :NA

(71)**Name of Applicant :**
1)THE GENERAL HOSPITAL CORPORATION
Address of Applicant :55 Fruit Street, Boston, MA 02114 UNITED STATES OF AMERICA
(72)**Name of Inventor :**
1)WALD, Lawrence, L.
2)ZIMMERMAN, Clarissa
3)STOCKMANN, Jason

(57) Abstract :
A portable magnetic resonance imaging (MRI) system that uses static magnetic field inhomogeneities in the main magnet for encoding the spatial location of nuclear spins is provided. Also provided is a spatial-encoding scheme for a low-field, low-power consumption, light-weight, and easily transportable MRI system. In general, the portable MRI system spatially encodes images using spatial inhomogeneities in the polarizing magnetic field rather than using gradient fields. Thus, an inhomogeneous static field is used to polarize, readout, and encode an image of the object. To provide spatial encoding, the magnet is rotated around the object to generate a number of differently encoded measurements. An image is then reconstructed by solving for the object most consistent with the data.

No. of Pages : 22 No. of Claims : 14

(12) PATENT APPLICATION PUBLICATION
(19) INDIA
(22) Date of filing of Application :15/12/2014
(21) Application No.2929/KOLNP/2014 A
(43) Publication Date : 08/05/2015

(54) Title of the invention : COMPLEXES OF CYTOMEGALOVIRUS PROTEINS

(51) International classification :A61K39/245,C07K14/045,C12N7/02
(31) Priority Document No :61/668,975
(32) Priority Date :06/07/2012
(33) Name of priority country :U.S.A
(86) International Application No :PCT/EP2013/063750
Filing Date :29/06/2013
(87) International Publication No :WO 2014/005959
(61) Patent of Addition to Application Number :NA
Filing Date :NA
(62) Divisional to Application Number :NA
Filing Date :NA

(71)**Name of Applicant :**
1)NOVARTIS AG
Address of Applicant :Lichtstrasse 35, CH-4056 Basel switzerland
(72)**Name of Inventor :**
1)CARFI, Andrea
2)WEN, Yingxia

(57) Abstract :
This disclosure provides an isolated human cytomegalovirus (HCMV) membrane protein complex, wherein said complex comprises gH, gL and at least one more HCMV glycoprotein. In some embodiments the complex consists of gH,gL and gO. In other embodiments the complex consists of gH, gL, p UL128, p UL130 and p UL131A. The disclosure also provides processes for expressing and purifying said complexes, and subsequent uses of said complexes in immunogenic compositions and vaccines.

No. of Pages : 76 No. of Claims : 27

(12) PATENT APPLICATION PUBLICATION
(19) INDIA
(22) Date of filing of Application :15/12/2014
(21) Application No.2930/KOLNP/2014 A
(43) Publication Date : 08/05/2015

(54) Title of the invention : PRODUCTION OF IMPROVED MICROPOROUS ZIRCONIUM SILICATE

(51) International classification :C01B33/24,B01J19/18,C02F1/42
(31) Priority Document No :61/658,117
(32) Priority Date :11/06/2012
(33) Name of priority country :U.S.A.
(86) International Application No :PCT/US2013/045219
Filing Date :11/06/2013
(87) International Publication No :WO 2013/188431
(61) Patent of Addition to Application Number :NA
Filing Date :NA
(62) Divisional to Application Number :NA
Filing Date :NA

(71)**Name of Applicant :**
1)ZS PHARMA, INC.
Address of Applicant :1120 South Freeway, Fort Worth, Texas 76104 UNITED STATES OF AMERICA
(72)**Name of Inventor :**
1)KEYSER, Donald, Jeffrey
2)GUILLEM, Alvaro, F.

(57) Abstract :
The present invention relates to novel microporous zirconium silicate compositions having a desired particle size distribution and methods of making those compositions. These compositions have an ideal particle size distribution for use ex vivo, for example in a dialysis exchange cartridge, yet retain many of the desirable properties of prior improved absorbers including high cation exchange capacity. Further, the new zirconium silicate molecular sieve absorbers can be manufactured using a technique that achieves the desired particle size distribution while eliminating the screening step that was previously necessary.

No. of Pages : 32 No. of Claims : 13

(12) PATENT APPLICATION PUBLICATION
(19) INDIA
(22) Date of filing of Application :24/12/2014
(21) Application No.3044/KOLNP/2014 A
(43) Publication Date : 08/05/2015

(54) Title of the invention : ADAPTIVE CLUSTERING OF LOCATIONS

(51) International classification :G01S5/00,H04B1/00
(31) Priority Document No :61/664,149
(32) Priority Date :25/06/2012
(33) Name of priority country :U.S.A.
(86) International Application No :PCT/US2013/047651
Filing Date :25/06/2013
(87) International Publication No :WO 2014/004529
(61) Patent of Addition to Application Number :NA
Filing Date :NA
(62) Divisional to Application Number :NA
Filing Date :NA

(71)**Name of Applicant :**
1)GOOGLE INC.
Address of Applicant :1600 Amphitheatre Parkway, Mountain View, California 94043 UNITED STATES OF AMERICA
(72)**Name of Inventor :**
1)UDESHI, Tushar Jairaj
2)HAWKINS, Dale Kris
3)STAMM, Thomas Carl
4)YANG, Guang

(57) Abstract :
Example techniques and systems include generating cluster information to consolidate multiple locations. In one example, a method includes receiving, at a computing device, a plurality of location identifiers corresponding to a plurality of locations at which a mobile computing device was previously located, defining, by the computing device, a plurality of geographic regions based at least in part on the plurality of location identifiers, wherein each of the plurality of geographic regions defines a physical area in which at least one of the plurality of locations is located, selecting, by the computing device, a subset of the plurality of geographic regions based on respective distances between a current location of the mobile computing device and a respective reference point within each of the geographic regions, and outputting, by the computing device and for display, an indication of the subset of the plurality of geographic regions.

No. of Pages : 56 No. of Claims : 19

(12) PATENT APPLICATION PUBLICATION
(19) INDIA
(22) Date of filing of Application :15/12/2014
(21) Application No.2940/KOLNP/2014 A
(43) Publication Date : 08/05/2015

(54) Title of the invention : NOVEL 2,3-DIHYDRO-1H-IMIDAZO{1,2 -A}PYRIMIDIN-5-ONE AND THIS1, 2, 3, 4-TETRAHYDROPYRIMIDO{1,2-A}PYRIMIDIN-6-ONE DERIVATIVES COMPRISING A SUBSTITUTED MORPHOLINE, PREPARATION THEREOF AND PHARMACEUTICAL USE THEREOF

(51) International classification :C07D233/46,C07D239/14,C07D487/04
(31) Priority Document No :1255917
(32) Priority Date :22/06/2012
(33) Name of priority country :France
(86) International Application No :PCT/IB2013/055099
Filing Date :21/06/2013
(87) International Publication No :WO 2013/190510
(61) Patent of Addition to Application Number :NA
Filing Date :NA
(62) Divisional to Application Number :NA
Filing Date :NA

(71)**Name of Applicant :**
1)SANOFI
Address of Applicant :54 rue La Boètie, F-75008 Paris France
(72)**Name of Inventor :**
1)EL-AHMAD, Youssef
2)FILOCHE-ROMME, Bruno
3)LETALLEC, Jean-Philippe
4)MARCINIAK, Gilbert
5)RONAN, Baptiste
6)VIVET, Bertrand
7)BROLLO, Maurice

(57) Abstract :
The invention relates to the novel products of formula (I) with p, q = 0, 1 or 2; R1 = phenyl, pyridyl; -(CH2) m -Ra; alkylene; cycloalkyl; heterocycloalkyl; alkyl; -SO2 -Rb; -CO-Re; m = 1 or 2; Ra = aryl, heteroaryl, -CO-cycloalkyl, -CO-heterocycloalkyl, -CO-Rb, -C(Rb)=N-ORc, -CO 2 Rd, -CONRxRy; Rb = alkyl, aryl, heteroaryl; Rc = H, alkyl; Rd = alkyl, cycloalkyl; Re = alkyl, cycloalkyl, aryl, heteroaryl; NRxRy with Rx,Ry = H, alkyl, cycloalkyl, alkoxy, phenyl, or form with N a ring with optionally O, N; R2, R3 = H, alkyl, CF 3, or form with C a ring with optionally O, S and N; R4 = H, F, Cl, CH3 or CN; the morpholine is substituted with Me, and optionally substituted with F, OH; or is (Formula 1a) and the isomer of configuration R,R (Formula 1b) these products being in all the isomer forms and the salts, as medicaments, in particular as anticancer medicaments.

No. of Pages : 504 No. of Claims : 20

(12) PATENT APPLICATION PUBLICATION
(19) INDIA
(22) Date of filing of Application :15/12/2014
(21) Application No.2941/KOLNP/2014 A
(43) Publication Date : 08/05/2015

(54) Title of the invention : IMAGE FORMING METHOD, IMAGE FORMING APPARATUS, AND RECORDED MATTER

(51) International classification :B41M5/00,B41J2/01,C09D11/00
(31) Priority Document No :2012-155193
(32) Priority Date :11/07/2012
(33) Name of priority country :Japan
(86) International Application No :PCT/JP2013/069072
Filing Date :05/07/2013
(87) International Publication No :WO 2014/010710
(61) Patent of Addition to Application Number :NA
Filing Date :NA
(62) Divisional to Application Number :NA
Filing Date :NA

(71)**Name of Applicant :**
1)RICOH COMPANY, LTD.
Address of Applicant :3-6, Nakamagome 1-chome, Ohta-ku, Tokyo, 1438555 Japan
(72)**Name of Inventor :**
1)AOAI, Shosuke
2)MAEKAWA, Tsutomu
3)NAMBA, Michihiko
4)SENO, Shinya
5)GOTOU, Hiroshi
6)GOTOH, Akihiko

(57) Abstract :
To provide an image forming method, including: a pre-treatment liquid application step for applying a pre-treatment liquid on a recording medium including a substrate and a coating layer at least on one surface of the substrate, wherein the pre-treatment liquid is applied on a surface of the recording layer with the coating layer! a drying step for drying the recording medium on which the pre-treatment liquid has been applied; and an image forming step for forming an image on the recording medium after drying by discharging a water-based ink by inkjet method, wherein the pre-treatment liquid includes a water-soluble cationic polymer, an ammonium salt of an organic acid and water, and wherein the water-based ink includes water and negatively charged colored particles including a colorant.

No. of Pages : 59 No. of Claims : 11

(12) PATENT APPLICATION PUBLICATION
(19) INDIA
(22) Date of filing of Application :24/12/2014
(21) Application No.3053/KOLNP/2014 A
(43) Publication Date : 08/05/2015

(54) Title of the invention : METHOD AND APPARATUS FOR PROCESSING VIDEO SIGNAL

(51) International classification :H04N7/36
(31) Priority Document No :61/670,145
(32) Priority Date :11/07/2012
(33) Name of priority country :U.S.A
(86) International Application No :PCT/KR2013/006131
Filing Date :10/07/2013
(87) International Publication No :WO 2014/010935
(61) Patent of Addition to Application Number :NA
Filing Date :NA
(62) Divisional to Application Number :NA
Filing Date :NA

(71)**Name of Applicant :**
1)LG ELECTRONICS INC.
Address of Applicant :20 Yeouido-dong, Yeongdeungpo-gu, Seoul 150-721 Republic of Korea
(72)**Name of Inventor :**
1)JUNG, Jiwook
2)YEA, Sehoon
3)KOO, Moonmo
4)HEO, Jin
5)KIM, Taesup
6)SUNG, Jaewon
7)SON, Eunyong

(57) Abstract :
The present invention relates to a method and apparatus for processing a video signal, which involve acquiring the prediction value for the current texture block and performing an inter-view compensation on the prediction value for the current texture block using a first compensation coefficient and a second compensation coefficient. The first compensation coefficient is acquired using the neighboring pixel of the current texture block and the neighboring pixel of a reference block. The second compensation coefficient is acquired using the neighboring pixel of the current texture block, the neighboring pixel of the reference block, and the first compensation coefficient. The method and apparatus of the present invention compensate for inter-view differences caused by imaging conditions, such as lighting or a camera, during the capture of multiview images so as to achieve improved accuracy in inter-view inter prediction.

No. of Pages : 24 No. of Claims : 15

(12) PATENT APPLICATION PUBLICATION
(19) INDIA
(22) Date of filing of Application :24/12/2014
(21) Application No.3054/KOLNP/2014 A
(43) Publication Date : 08/05/2015

(54) Title of the invention : ROD TRANSFER METHOD AND TRANSPORTING DEVICE

(51) International classification :B21J13/10,B21K1/22
(31) Priority Document No :NA
(32) Priority Date :NA
(33) Name of priority country :NA
(86) International Application No :PCT/JP2013/059092
Filing Date :27/03/2013
(87) International Publication No :WO 2014/155580
(61) Patent of Addition to Application Number :NA
Filing Date :NA
(62) Divisional to Application Number :NA
Filing Date :NA

(71)**Name of Applicant :**
1)NITTAN VALVE CO., LTD.
Address of Applicant :518, SOYA, HADANO-SHI, KANAGAWA 2570031 Japan
(72)**Name of Inventor :**
1)SHIMIZU TAKAHIRO
2)ENDOH shinya
3)TAKAHASHI Osamu

(57) Abstract :
[Problem] To provide a method of transferring rods whereby one end of a rod, as a workpiece, can be accurately inserted into a prescribed positioning hole even when the length of the rod is short. [Solution] In this method: a chuck device (64A (64B)) of a robot hand (62c) is used when receiving a primary formed workpiece (W1) from an electrode chuck (22); after the primary formed workpiece (W1) is received and before inserting a shaft (W11) of the primary formed workpiece (W1) into an insertion hole (12) on a forging press body (10), a holding portion (W11a), on the primary formed workpiece (W1), that is held by the electrode chuck (22) is grasped with a chuck device (65A (65B)) that is not the chuck device (64A (64B)); and the grasp of the chuck device (64A (64B)) on the primary formed workpiece (W1) is released. Thus, the holding portion (W11a) that is held by the electrode chuck (22) on the shaft (W11) side of the primary formed workpiece (W1) can be inserted into the insertion hole (12).

No. of Pages : 62 No. of Claims : 14

(12) PATENT APPLICATION PUBLICATION
(19) INDIA
(22) Date of filing of Application :15/12/2014
(21) Application No.2932/KOLNP/2014 A
(43) Publication Date : 08/05/2015

(54) Title of the invention : PREPAID WALLET FOR MERCHANTS

(51) International classification :G06Q20/36,G06Q20/40
(31) Priority Document No :13/525,575
(32) Priority Date :18/06/2012
(33) Name of priority country :U.S.A.
(86) International Application No :PCT/US2013/045932
Filing Date :14/06/2013
(87) International Publication No :WO 2013/192041
(61) Patent of Addition to Application Number :NA
Filing Date :NA
(62) Divisional to Application Number :NA
Filing Date :NA

(71)**Name of Applicant :**
1)EBAY INC.
Address of Applicant :2145 Hamilton Avenue, San Jose, California 95125 UNITED STATES OF AMERICA
(72)**Name of Inventor :**
1)CHAITANYA, Somisetty Krishna

(57) Abstract :
A system including a memory storing user account information with a payment provider associated with specific merchants, and a method for use of the system are provided. The system includes one or more processors in communication with the memory and adapted to: receive login information from a user from a merchant website; access an account of the user with the payment provider; cause information for the account of the user to be displayed on the merchant website; and process a payment to the merchant from the account of the user.

No. of Pages : 29 No. of Claims : 20

(12) PATENT APPLICATION PUBLICATION
(19) INDIA
(22) Date of filing of Application :15/12/2014
(21) Application No.2933/KOLNP/2014 A
(43) Publication Date : 08/05/2015

(54) Title of the invention : ANTI-SIGLEC-15 ANTIBODIES

(51) International classification :C07K16/28,A61K39/395
(31) Priority Document No :61/673,442
(32) Priority Date :19/07/2012
(33) Name of priority country :U.S.A.
(86) International Application No :PCT/CA2013/000646
Filing Date :17/07/2013
(87) International Publication No :WO 2014/012165
(61) Patent of Addition to Application Number :NA
Filing Date :NA
(62) Divisional to Application Number :NA
Filing Date :NA

(71)**Name of Applicant :**
1)ALETHIA BIOTHERAPEUTICS INC.
Address of Applicant :141 PRÉSIDENT-KENNEDY AVENUE, SUITE SB-5100, MONTRÉAL, QUÉBEC H2X 1Y4 CANADA
(72)**Name of Inventor :**
1)STUIBLE, MATTHEW
2)TREMBLAY, GILLES, BERNARD
3)SULEA, TRAIAN
4)MORAITIS, ANNA, N.
5)FILION, MARIO

(57) Abstract :
Antibodies and antigen binding fragments that specifically binds to Siglec-15 are described herein. These antibodies or antigen binding fragments may have the ability of inhibiting differentiation of osteoclasts and/or the ability of inhibiting the bone resorption activity of osteoclasts. Compositions and cells expressing anti-Siglec-15 antibodies or antigen binding fragments are also disclosed herewith. Anti-Siglec-15 antibodies may also be useful for the treatment of bone loss, or bone diseases. Methods for the detection or diagnosis of bone loss or bone-related diseases are also described.

No. of Pages : 122 No. of Claims : 68

(12) PATENT APPLICATION PUBLICATION
(19) INDIA
(22) Date of filing of Application :15/12/2014
(21) Application No.2934/KOLNP/2014 A
(43) Publication Date : 08/05/2015

(54) Title of the invention : RESIN COMPOSITION FOR TONER, TONER, DEVELOPER AND IMAGE FORMING APPARATUS

(51) International classification :G03G 9/087
(31) Priority Document No :2012-144076
(32) Priority Date :27/06/2012
(33) Name of priority country :Japan
(86) International Application No :PCT/JP2013/066898
Filing Date :13/06/2013
(87) International Publication No :WO 2014/002854
(61) Patent of Addition to Application Number :NA
Filing Date :NA
(62) Divisional to Application Number :NA
Filing Date :NA

(71)**Name of Applicant :**
1)RICOH COMPANY, LTD.
Address of Applicant :3-6, Nakamagome 1-Chome, Ohta-ku, Tokyo, 1438555 Japan
(72)**Name of Inventor :**
1)YAMAUCHI, YOSHITAKA
2)SUZUKI, KAZUMI
3)MORITA, TATSUYA
4)YAMASHITA, HIROSHI
5)SUGIMOTO, TSUYOSHI
6)ASAHINA, DAISUKE

(57) Abstract :
A resin composition for a toner including a polyester resin and a colorant, wherein the polyester resin has A(10) — A(180) of 70 or greater, where A(10) (%) is a transmittance of light having a wavelength of 500 nm through a mixture of 20 parts by mass of the polyester resin added to 80 parts by mass of ethyl acetate and stirred at 25°C for 10 minutes, and A(180) (%) is the transmittance after the mixture is left to stand for 3 hours.

No. of Pages : 79 No. of Claims : 11

(12) PATENT APPLICATION PUBLICATION
(19) INDIA
(22) Date of filing of Application :15/12/2014
(21) Application No.2935/KOLNP/2014 A
(43) Publication Date : 08/05/2015

(54) Title of the invention : 2 - (AZAINDOL- 2 - YL) BENZ IMIDAZOLES AS PAD4 INHIBITORS

(51) International classification	:C07D471/04,A61K31/407,A61K31/4184
(31) Priority Document No	:NA
(32) Priority Date	:NA
(33) Name of priority country	:NA
(86) International Application No Filing Date	:PCT/EP2012/064649 :26/07/2012
(87) International Publication No	:WO 2014/015905
(61) Patent of Addition to Application Number Filing Date	:NA :NA
(62) Divisional to Application Number Filing Date	:NA :NA

(71)**Name of Applicant :**
1)GLAXO GROUP LIMITED
Address of Applicant :980 Great West Road, Brentford, Middlesex, TW8 9GS UNITED KINGDOM
(72)**Name of Inventor :**
1)ATKINSON, Stephen John
2)BARKER, Michael David
3)CAMPBELL, Matthew
4)DIALLO, Hawa
5)DOUAULT, Clement
6)GARTON, Neil Stuart
7)LIDDLE, John
8)SHEPPARD, Robert John
9)WALKER, Ann, Louise
10)WELLAWAY, Christopher
11)WILSON, David Matthew

(57) Abstract :
Compounds of formula (I) wherein; R1 is hydrogen or C1-6alkyl; R2 is hydrogen, C1-6alkyl, perhalomethylC0-5alkyl-O-, or C1-6alkoxy; R3 is hydrogen, C1-6alkyl, or C1-6alkoxyC1-6alkyl; R4 is hydrogen, C1-6alkyl, perhalomethylC1-6alkyl; or unsubstituted C3-6cycloalkylC1-6alkyl; A is C-R5 or N; B is C-R6 or N; D is C-R7 or N; with the proviso that at least one of A, B, and D, is N; R5 is hydrogen or C1-6alkyl; R6 is hydrogen or C1-6alkyl; R7 is hydrogen, C1-6alkyl, C1-6alkoxy, or hydroxy; R8 is hydrogen or C1-6alkyl, with the proviso that one of R4 and R8 is hydrogen; R9 is hydrogen or hydroxy; R10 is hydrogen or C1-6alkyl; and salts thereof are PAD4 inhibitors and may be useful in the treatment of various disorders, for example rheumatoid arthritis, vasculitis, systemic lupus erythematosus, ulcerative colitis, cancer, cystic fibrosis, asthma, cutaneous lupus erythematosis, and psoriasis.

No. of Pages : 90 No. of Claims : 22

(12) PATENT APPLICATION PUBLICATION
(19) INDIA
(22) Date of filing of Application :24/12/2014
(21) Application No.3052/KOLNP/2014 A
(43) Publication Date : 08/05/2015

(54) Title of the invention : LIGHTING INFRASTRUCTURE AND REVENUE MODEL

(51) International classification :H05B37/02,H04L12/12,G05B11/01
(31) Priority Document No :61/658,874
(32) Priority Date :12/06/2012
(33) Name of priority country :U.S.A.
(86) International Application No :PCT/US2013/045407
Filing Date :12/06/2013
(87) International Publication No :WO 2013/188536
(61) Patent of Addition to Application Number :NA
Filing Date :NA
(62) Divisional to Application Number :NA
Filing Date :NA

(71)**Name of Applicant :**
1)SENSITY SYSTEMS INC.
Address of Applicant :480 Oakmead Parkway, Sunnyvale, California 94085 UNITED STATES OF AMERICA
(72)**Name of Inventor :**
1)MARTIN, Hugh
2)CUMPSTON, Rusty

(57) Abstract :
Methods, devices, and systems for implementing lighting infrastructure application frameworks and networks and associated revenue models. In one embodiment, a computing device may receive a request from a first device to access data from a lighting infrastructure application framework, and the data from the lighting infrastructure application framework may include data from lighting node platform(s). In an embodiment, the computing device may perform authorizations related to providing access to data, as well as transmit responses to requests for data. Costs and revenues associated with applications may also be performed based on usage of platforms, sensors, and controllers within a lighting infrastructure. In an embodiment, software, applications, and other instructions may be transmitted by a computing device in response to receiving requests. In another embodiment, a computing device may process received data (e.g., sensor data from lighting node platforms) to detect trends or events relevant to applications.

No. of Pages : 135 No. of Claims : 131

(12) PATENT APPLICATION PUBLICATION
(19) INDIA
(22) Date of filing of Application :18/12/2014
(21) Application No.2974/KOLNP/2014 A
(43) Publication Date : 08/05/2015

(54) Title of the invention : USING FINANCIAL TRANSACTIONS TO GENERATE RECOMMENDATIONS

(51) International classification :G06Q50/10
(31) Priority Document No :61/706,672
(32) Priority Date :27/09/2012
(33) Name of priority country :U.S.A.
(86) International Application No :PCT/US2013/058248
Filing Date :05/09/2013
(87) International Publication No :WO 2014/051959
(61) Patent of Addition to Application Number :NA
Filing Date :NA
(62) Divisional to Application Number :NA
Filing Date :NA

(71)**Name of Applicant :**
1)INTUIT INC.
Address of Applicant :2700 Coast Avenue, Mountain View, California 94043 UNITED STATES OF AMERICA
(72)**Name of Inventor :**
1)MUKHERJEE, Saikat
2)JOSEPH, Sony

(57) Abstract :
The disclosed embodiments provide a system that processes transaction data. During operation the system obtains the transaction data for a set of financial transactions between a set of users and a set of organizations. Next, the system uses the transaction data to calculate a set of preference scores for the users and the organizations. Finally, the system generates recommendations associated with the users and the organizations from the preference scores without obtaining explicit preferences for the organizations from the users.

No. of Pages : 21 No. of Claims : 24

(12) PATENT APPLICATION PUBLICATION
(19) INDIA
(22) Date of filing of Application :18/12/2014
(21) Application No.2975/KOLNP/2014 A
(43) Publication Date : 08/05/2015

(54) Title of the invention : SYSTEM AND METHOD FOR ESTABLISHING AND MONETIZING TRUSTED IDENTITIES IN CYBERSPACE WITH PERSONAL DATA SERVICE AND USER CONSOLE

(51) International classification :G06F21/30
(31) Priority Document No :61/666,560
(32) Priority Date :29/06/2012
(33) Name of priority country :U.S.A.
(86) International Application No :PCT/US2013/048952
Filing Date :01/07/2013
(87) International Publication No :WO 2014/005148
(61) Patent of Addition to Application Number :NA
Filing Date :NA
(62) Divisional to Application Number :NA
Filing Date :NA

(71)**Name of Applicant :**
1)ID DATAWEB, INC.
Address of Applicant :Suite 400, 8330 Boone Boulevard, Vienna, Virginia 22182 UNITED STATES OF AMERICA
(72)**Name of Inventor :**
1)COXE, David H.
2)COXE, Jr., Robert, Lloyd
3)DIALS, Jr., John, Joseph
4)MCKAY-DONOVAN, Christine, W.

(57) Abstract :
A system and method for establishing and monetizing trusted identities in cyberspace relying upon user opt in. Users request to attain secure IDs by accessing parties that will rely on secure IDs to complete a transaction for example merchants and service providers (relying parties). The relying parties (RPs) communicate with identity service providers and attribute providers via an Attribute Exchange Network (AXN) in order to obtain verified attributes associated with an entity (end user or user) that wishes to conduct business with the relying party. The relying party makes requests for verified attributes that are important to consummating business transactions for the relying party. Users are informed of requests for attributes on behalf of relying parties and users have the option to verify attributes, and add new attributes that may be useful or required for conducting business with relying parties. Once attributes are verified the relying party is informed that the user s attributes have been verified and may be used to conduct business transactions. Relying parties make payment to attribute providers and identity service providers via the AXN provider, or the AXN provider makes payment on behalf of the relying parties and the relying parties pay the AXN provider, for attribute verification attempts and credential authentications on a transactional or periodic basis depending upon the nature of the transactions involved.

No. of Pages : 60 No. of Claims : 19

(12) PATENT APPLICATION PUBLICATION
(19) INDIA
(22) Date of filing of Application :18/12/2014
(21) Application No.2977/KOLNP/2014 A
(43) Publication Date : 08/05/2015

(54) Title of the invention : IMPROVED DESIGN OF MICROWAVE ACOUSTIC WAVE FILTERS

(51) International classification :G06F17/50,H03H9/54,H03H9/56
(31) Priority Document No :61/798,482
(32) Priority Date :15/03/2013
(33) Name of priority country :U.S.A.
(86) International Application No :PCT/US2014/019091
Filing Date :27/02/2014
(87) International Publication No :WO 2014/149506
(61) Patent of Addition to Application Number :NA
Filing Date :NA
(62) Divisional to Application Number :NA
Filing Date :NA

(71)**Name of Applicant :**
1)RESONANT INC.
Address of Applicant :110 CASTILIAN DRIVE, SUITE 100, Santa Barbara CA 93117 UNITED STATES OF AMERICA
(72)**Name of Inventor :**
1)SILVER, Richard N.
2)RAIHN, Kurt F.
3)FENZI, Neal O.
4)HAMMOND, Robert B.

(57) Abstract :
A method of designing an acoustic microwave filter (100) comprises selecting a filter section based on frequency response requirements. The filter section includes an input (106), an output (108), and a plurality of circuit elements. The circuit elements have at least in line acoustic resonators (102a, 104a) or in shunt acoustic resonators (102b, 104b). The method further comprises selecting a value for each circuit element, selecting a number of filter sections, and cascading the selected number of filter sections to create a cascaded filter circuit design, such that at least one pair of immediately adjacent filter sections are connected to each other via their inputs or their outputs. The method further comprises adding parasitic effects to the cascaded filter circuit design to create a pre optimized filter circuit design, optimizing the pre-optimized filter circuit design to create a final filter circuit design, and constructing the acoustic microwave filter based on the final filter circuit design.

No. of Pages : 43 No. of Claims : 34

(12) PATENT APPLICATION PUBLICATION
(19) INDIA
(22) Date of filing of Application :18/12/2014
(21) Application No.2978/KOLNP/2014 A
(43) Publication Date : 08/05/2015

(54) Title of the invention : ELEMENT REMOVAL DESIGN IN MICROWAVE FILTERS

(51) International classification :G06F17/50,H03H9/46
(31) Priority Document No :61/802,114
(32) Priority Date :15/03/2013
(33) Name of priority country :U.S.A.
(86) International Application No :PCT/US2014/019106
Filing Date :27/02/2014
(87) International Publication No :WO 2014/149507
(61) Patent of Addition to Application Number :NA
Filing Date :NA
(62) Divisional to Application Number :NA
Filing Date :NA

(71)**Name of Applicant :**
1)RESONANT INC.
Address of Applicant :110 CASTILIAN DRIVE, SUITE 100, Santa Barbara, CA 93117 UNITED STATES OF AMERICA
(72)**Name of Inventor :**
1)FENZI, Neal
2)RAIHN, Kurt

(57) Abstract :
A method of designing a microwave filter using a computerized filter optimizer, comprises generating a filter circuit design in process (DIP) comprising a plurality of circuit elements having a plurality of resonant elements and one or more non resonant elements, optimizing the DIP by inputting the DIP into the computerized filter optimizer, determining that one of the plurality of circuit elements in the DIP is insignificant, removing the one insignificant circuit element from the DIP, deriving a final filter circuit design from the DIP, and manufacturing the microwave filter based on the final filter circuit design.

No. of Pages : 41 No. of Claims : 23

(12) PATENT APPLICATION PUBLICATION
(19) INDIA
(22) Date of filing of Application :02/12/2014
(21) Application No.2774/KOLNP/2014 A
(43) Publication Date : 08/05/2015

(54) Title of the invention : VACCINE

(51) International classification	:A61K39/00,A61K39/21,A61K31/00
(31) Priority Document No	:61/656,242
(32) Priority Date	:06/06/2012
(33) Name of priority country	:U.S.A
(86) International Application No	:PCT/EP2013/061752
Filing Date	:06/06/2013
(87) International Publication No	:WO 2013/182662
(61) Patent of Addition to Application Number	:NA
Filing Date	:NA
(62) Divisional to Application Number	:NA
Filing Date	:NA

(71)**Name of Applicant :**
1)BIONOR IMMUNO AS
Address of Applicant :Klostergata 33, P.O. Box 2870, NO-3702 Skien NORWAY
(72)**Name of Inventor :**
1)HØIE, Lars
2)LUNDEMOSE, Anker
3)ÖKVIST, Mats
4)HOVDEN, Arnt Ove
5)GRØNVOLD, Maja Sommerfelt
6)HANSEN, Vidar Wendel
7)SØRENSEN, Birger

(57) Abstract :
The present invention relates to novel combinations of active agents and methods for treatment of retrovirus infections including HIV infections and AIDS. In particular, the present invention relates to novel use of administrations and combinations of a compound to stimulate the humoral immunity and/or peptides that elicit a cell-mediated immune response in a subject; and immunomodulatory compounds and/or a reservoir purging agent,such as a histone deacetylase (HDAC) inhibitor.

No. of Pages : 87 No. of Claims : 43

(12) PATENT APPLICATION PUBLICATION
(21) Application No.2890/KOLNP/2014 A
(19) INDIA
(22) Date of filing of Application :11/12/2014
(43) Publication Date : 08/05/2015

(54) Title of the invention : METHOD AND DEVICE FOR PROCESSING VIDEO SIGNAL

(51) International classification :H04N7/32
(31) Priority Document No :61/661,797
(32) Priority Date :19/06/2012
(33) Name of priority country :U.S.A.
(86) International Application No :PCT/KR2013/005349
Filing Date :18/06/2013
(87) International Publication No :WO 2013/191436
(61) Patent of Addition to Application Number :NA
Filing Date :NA
(62) Divisional to Application Number :NA
Filing Date :NA

(71)**Name of Applicant :**
1)LG ELECTRONICS INC.
Address of Applicant :20 Yeouido-dong, Yeongdeungpo-gu, Seoul 150-721 Republic of Korea
(72)**Name of Inventor :**
1)SON, Eunyong
2)JUNG, Jiwook
3)YEA, Sehoon
4)KOO, Moonmo
5)HEO, Jin
6)KIM, Taesup
7)SUNG, Jaewon

(57) Abstract :
The present invention relates to inter-view residual prediction and is characterized by acquiring residual data of a first reference block by using a motion vector of a neighboring block, acquiring residual data of a second reference block by using a reference view motion vector or a disparity vector, acquiring a residual data prediction value by using the residual data of the first reference block and the residual data of the second reference block, and coding a current texture block by using the residual data prediction value. The present invention can perform inter-view residual prediction by using a prediction value acquired using coded data of another view point belonging to the same time band to increase the accuracy of video data prediction by using a correlation between view points and reduce the amount of residual data to be transmitted, thereby improving the coding efficiency. In addition, the complexity in a coding process may be reduced by adding a condition for applying the inter-view residual prediction.

No. of Pages : 36 No. of Claims : 14

(12) PATENT APPLICATION PUBLICATION
(19) INDIA
(22) Date of filing of Application :11/12/2014
(21) Application No.2891/KOLNP/2014 A
(43) Publication Date : 08/05/2015

(54) Title of the invention : OPTICAL FIBER CABLES WITH POLYETHYLENE BINDER

(51) International classification :G02B6/44
(31) Priority Document No :61/648,182
(32) Priority Date :17/05/2012
(33) Name of priority country :U.S.A.
(86) International Application No :PCT/US2013/023366
Filing Date :28/01/2013
(87) International Publication No :WO 2013/172878
(61) Patent of Addition to Application Number :NA
Filing Date :NA
(62) Divisional to Application Number :NA
Filing Date :NA

(71)**Name of Applicant :**
1)OFS FITEL, LLC
Address of Applicant :2000 Northeast Expressway, Norcross, GA 30071 UNITED STATES OF AMERICA
(72)**Name of Inventor :**
1)JOST, Stefan
2)WOLFERT, Johannes

(57) Abstract :
An optical fiber cable includes a bundle of a plurality of loose tubes held by a polyethylene binder. The polyethylene binder softens or melts when a hot cable sheath is applied during the cable manufacturing process. This prevents the polyethylene binder to cut into the loose tubes to cause indentations. Therefore the resulting optical fiber cable is substantially free from indentations.

No. of Pages : 22 No. of Claims : 22

(12) PATENT APPLICATION PUBLICATION
(19) INDIA
(22) Date of filing of Application :22/12/2014
(21) Application No.3001/KOLNP/2014 A
(43) Publication Date : 08/05/2015

(54) Title of the invention : TOTARY WING VEHICLE

(51) International classification :B64C27/10
(31) Priority Document No :61/649,741
(32) Priority Date :21/05/2012
(33) Name of priority country :U.S.A.
(86) International Application No :PCT/US2013/042026
Filing Date :21/05/2013
(87) International Publication No :WO 2014/025444
(61) Patent of Addition to Application Number :NA
Filing Date :NA
(62) Divisional to Application Number :NA
Filing Date :NA

(71)**Name of Applicant :**
1)ARLTON, Paul E.
Address of Applicant :3279 Secretariat Circle West Lafayette, Indiana 47906, UNITED STATES OF AMERICA.
2)ARLTON, David J.
(72)**Name of Inventor :**
1)ARLTON, Paul E.
2)ARLTON, David J.

(57) Abstract :
A rotary wing vehicle includes a body structure having an elongated tubular backbone or core, and a counter-rotating coaxial rotor system having rotors with each rotor having a separate motor to drive the rotors about a common rotor axis of rotation. The rotor system is used to move the rotary wing vehicle in directional flight.

No. of Pages : 91 No. of Claims : 36

(12) PATENT APPLICATION PUBLICATION
(21) Application No.3094/KOLNP/2014 A
(19) INDIA
(22) Date of filing of Application :29/12/2014
(43) Publication Date : 08/05/2015

(54) Title of the invention : PROCESS FOR PREPARING N-ACYL AMINO ACID SALTS

(51) International classification :C07C231/02
(31) Priority Document No :61/667,568
(32) Priority Date :03/07/2012
(33) Name of priority country :U.S.A.
(86) International Application No :PCT/US2013/048341
Filing Date :27/06/2013
(87) International Publication No :WO 2014/008103
(61) Patent of Addition to Application Number :NA
Filing Date :NA
(62) Divisional to Application Number :NA
Filing Date :NA

(71)**Name of Applicant :**
1)STEPAN COMPANY
Address of Applicant :22 W. Frontage Road, Northfield, IL 60093 UNITED STATES OF AMERICA
(72)**Name of Inventor :**
1)WANG, Bing
2)DADO, Gregory, P.

(57) Abstract :
Improved processes for making an N-acyl amino acid salt from a fatty alkyl ester or a polyol ester are disclosed. Each process uses a polyol selected from glycerin or propylene glycol in an amount effective to keep the reaction mixture fluid until conversion to the N-acyl amino acid salt reaches the desired level of completion. In one process, a fatty alkyl ester reacts with an amino acid salt in the presence of glycerin or propylene glycol to produce an N-acyl amino acid salt. In another process, a polyol ester reacts with the amino acid salt in the presence of added glycerin or propylene glycol to produce the N-acyl amino acid salt. We surprisingly found that an effective amount of glycerin or propylene glycol minimizes or eliminates reaction mixture solidification or foaming, reduces color, and minimizes the level of di- and tripeptide by- products. In a related process, water is added when conversion of the amino acid salt to the N-acyl amino acid salt is in the range of 50 to 90 mole %. Water addition improves processability, advances conversion without producing excessive soap, and helps to ensure that the N-acyl amino acid salt will have low color and a small proportion of by-products.

No. of Pages : 23 No. of Claims : 32

(12) PATENT APPLICATION PUBLICATION
(19) INDIA
(22) Date of filing of Application :12/12/2014
(21) Application No.2906/KOLNP/2014 A
(43) Publication Date : 08/05/2015

(54) Title of the invention : 1, 2, 4-TRIAZINE-6-CARBOXAMIDE KINASE INHIBITORS

(51) International classification :A01N43/64,A01N43/707,A61K31/53
(31) Priority Document No :61/663,499
(32) Priority Date :22/06/2012
(33) Name of priority country :U.S.A.
(86) International Application No :PCT/US2013/046006
Filing Date :14/06/2013
(87) International Publication No :WO 2013/192049
(61) Patent of Addition to Application Number :NA
Filing Date :NA
(62) Divisional to Application Number :NA
Filing Date :NA

(71)**Name of Applicant :**
1)PORTOLA PHARMACEUTICALS, INC.
Address of Applicant :270 E. Grand Avenue, Suite 22, South San Francisco, California 94080 UNITED STATES OF AMERICA
(72)**Name of Inventor :**
1)JIA, Zhaozhong J.
2)KANE, Brian
3)ROSE, Jack
4)BAUER, Shawn M.
5)SONG, Yonghong
6)XU, Qing
7)PANDEY, Anjali

(57) Abstract :
Provided are triazine compounds for inhibiting of Syk kinase, intermediates used in making such compounds, methods for their preparation, pharmaceutical compositions thereof, methods for inhibiting Syk kinase activity, and methods for treating conditions mediated at least in part by Syk kinase activity.

No. of Pages : 205 No. of Claims : 51

(12) PATENT APPLICATION PUBLICATION
(19) INDIA
(22) Date of filing of Application :12/12/2014
(21) Application No.2907/KOLNP/2014 A
(43) Publication Date : 08/05/2015

(54) Title of the invention : MACHINE AND METHOD FOR CLEANING FABRICS OR THE LIKE

(51) International classification :D06F35/00,D06F43/00,D06F43/02
(31) Priority Document No :BO2012A000418
(32) Priority Date :31/07/2012
(33) Name of priority country :Italy
(86) International Application No :PCT/IB2013/055864
Filing Date :17/07/2013
(87) International Publication No :WO 2014/020474
(61) Patent of Addition to Application Number :NA
Filing Date :NA
(62) Divisional to Application Number :NA
Filing Date :NA

(71)**Name of Applicant :**
1)F.M.B. FABBRICA MACCHINE BOLOGNA S.P.A.
Address of Applicant :Via Turati, 16, I-40010 Sala Bolognese ITALY
(72)**Name of Inventor :**
1)CUPPINI, Gabriele
2)NUZZO, Fulvio

(57) Abstract :
Described is a method for cleaning fabrics (2) such as garments and the like, comprising the following steps: a) preparing a compartment (4) for containing fabrics (2); b) preparing a quantity of cleaning fluid in fluid communication with the containment compartment (4); c) inserting the fabrics in the compartment (4) and isolating the containment compartment with respect to an outside environment; d) sucking air from the compartment (4), in a substantially continuous manner, for adjusting the pressure in the compartment (4) for containing the fabrics (2) to a pressure less than the atmospheric pressure so as to allow the evaporation of the cleaning fluid and the introduction into the compartment (4) of the cleaning fluid in the vapour phase (V), for cleaning the fabrics (2).

No. of Pages : 14 No. of Claims : 16

(12) PATENT APPLICATION PUBLICATION
(19) INDIA
(22) Date of filing of Application :12/12/2014
(21) Application No.2908/KOLNP/2014 A
(43) Publication Date : 08/05/2015

(54) Title of the invention : METHODS AND SYSTEMS FOR COOLING HOT PARTICULATES

(51) International classification :C10J3/56
(31) Priority Document No :13/480,265
(32) Priority Date :24/05/2012
(33) Name of priority country :U.S.A.
(86) International Application No :PCT/US2013/042584
Filing Date :24/05/2013
(87) International Publication No :WO 2013/177485
(61) Patent of Addition to Application Number :NA
Filing Date :NA
(62) Divisional to Application Number :NA
Filing Date :NA

(71)**Name of Applicant :**
1)KELLOGG BROWN & ROOT LLC
Address of Applicant :601 Jefferson Avenue, Houston, TX 77002 UNITED STATES OF AMERICA
(72)**Name of Inventor :**
1)CHAN, Iwan, H.
2)PHILLIPS, William, E.
3)LI, Yongchao

(57) Abstract :
Methods, systems, and apparatus for cooling particulates are provided. The method can include introducing particulates to a heat exchanger containing a tube bundle having a plurality of tubulars, introducing a coolant to the plurality of tubulars through a coolant inlet, flowing the particulates through the shell side of the heat exchanger, and contacting at least a portion of the particulates with the tube bundle. The method can also include recovering a heated coolant from the coolant outlet and recovering cooled particulates from the particulate outlet. The heat exchanger can include a vessel having an elongated shell having a first end, a second end, one or more sidewalls, a shell side particulate inlet disposed in the one or more sidewalis for receiving particulates, a shell side particulate outlet disposed adjacent the second end for discharging cooled particulates, and a tube bundle including a plurality of tubulars disposed within the vessel.

No. of Pages : 43 No. of Claims : 20

(12) PATENT APPLICATION PUBLICATION
(19) INDIA
(22) Date of filing of Application :30/12/2014
(21) Application No.3106/KOLNP/2014 A
(43) Publication Date : 08/05/2015

(54) Title of the invention : DC POWER SUPPLY DEVICE, AND CONTROL METHOD FOR DC POWER SUPPLY DEVICE

(51) International classification :H05H1/46,C23C14/34
(31) Priority Document No :NA
(32) Priority Date :NA
(33) Name of priority country :NA
(86) International Application No :PCT/JP2012/072854
Filing Date :07/09/2012
(87) International Publication No :WO 2014/038060
(61) Patent of Addition to Application Number :NA
Filing Date :NA
(62) Divisional to Application Number :NA
Filing Date :NA

(71)**Name of Applicant :**
1)KYOSAN ELECTRIC MFG. CO., LTD.
Address of Applicant :29-1, HEIANCHO 2-CHOME, TSURUMI-KU, YOKOHAMA-SHI, KANAGAWA 2300031 Japan
(72)**Name of Inventor :**
1)YUZURIHARA, ITSUO
2)ADACHI, TOSHIYUKI
3)KODAMA, SHINICHI

(57) Abstract :
Intermittent short-circuit control is performed in the ignition mode, thereby allowing short-circuit current to flow in the current source step-down type chopper. Energy of the short-circuit current is temporarily accumulated in the inductor provided in the current source step-down type chopper. The accumulated energy boosts the output voltage from the direct current power supply device during the period until the next short circuiting, via the current, the multiphase inverter, and the rectifier. The voltage boosting operation where accumulation of the current energy by short circuiting and boosting of the output voltage by conduction are repeated, controls an increase of the output voltage which is applied to the plasma generator.

No. of Pages : 80 No. of Claims : 14

(12) PATENT APPLICATION PUBLICATION
(19) INDIA
(22) Date of filing of Application :30/12/2014
(21) Application No.3107/KOLNP/2014 A
(43) Publication Date : 08/05/2015

(54) Title of the invention : SYSTEM FOR DECONTAMINATING WATER AND GENERATING WATER VAPOR

(51) International classification :B01D3/30,C02F1/38
(31) Priority Document No :13/536,581
(32) Priority Date :28/06/2012
(33) Name of priority country :U.S.A.
(86) International Application No :PCT/US2013/046595
Filing Date :19/06/2013
(87) International Publication No :WO 2014/004217
(61) Patent of Addition to Application Number :NA
Filing Date :NA
(62) Divisional to Application Number :NA
Filing Date :NA

(71)**Name of Applicant :**
1)VERNO HOLDINGS, LLC
Address of Applicant :Ametrine Executive Suites, 6130 Elton Avenue, Las Vegas, NEVADA 89107 UNITED STATES OF AMERICA
(72)**Name of Inventor :**
1)RILEY, John, D.
2)JOHNSON, Dana, L.

(57) Abstract :
A system and method for processing a fluid, including decontaminating water and generating water vapor includes introducing the fluid into a vessel. The fluid is moved through a series of rotating trays alternately separated by stationary baffles so as to swirl and heat the fluid to effect the vaporization thereof to produce a vapor having at least some of the contaminants separated therefrom. The vapor is removed from the vessel for condensing apart from the separated contaminants and the remaining water. The vapor may be passed through a turbine connected to an electric generator. Sensors in a controller may be employed to adjust the speed of rotation of the trays or fluid input into the vessel in response to the sensed conditions. The treated fluid may be recirculated and reprocessed through the vessel to increase the purification thereof.

No. of Pages : 66 No. of Claims : 37

(12) PATENT APPLICATION PUBLICATION
(19) INDIA
(22) Date of filing of Application :23/12/2014
(21) Application No.3021/KOLNP/2014 A
(43) Publication Date : 08/05/2015

(54) Title of the invention : INTRAOCULAR LENS INSERTER

(51) International classification :A61F2/16,A61F9/007
(31) Priority Document No :61/655,255
(32) Priority Date :04/06/2012
(33) Name of priority country :U.S.A.
(86) International Application No :PCT/US2013/044183
Filing Date :04/06/2013
(87) International Publication No :WO 2013/184727
(61) Patent of Addition to Application Number :NA
Filing Date :NA
(62) Divisional to Application Number :NA
Filing Date :NA

(71)**Name of Applicant :**
1)ALCON PHARMACEUTICALS, LTD
Address of Applicant :ROUTE DES ARSENAUX 41, FRIBOURG, CH-1701 SWITZERLAND
(72)**Name of Inventor :**
1)AULD, Jack, R.

(57) Abstract :
An intraocular lens inserter can include an energy storage portion, an actuator portion, and a lens support portion. The energy storage portion can include a compressible energy storage device, such as a compressible fluid, springs, and other devices. The inserter can include an actuator portion operating with a substantially incompressible fluid, such as liquids or other noncompressible fluids. The actuator can be configured to provide an operator with control over the release of energy from the energy storage portion so as to move a plunger for the discharge of a lens from an intraocular lens cartridge.

No. of Pages : 33 No. of Claims : 20

(12) PATENT APPLICATION PUBLICATION
(19) INDIA
(22) Date of filing of Application :23/12/2014
(21) Application No.3022/KOLNP/2014 A
(43) Publication Date : 08/05/2015

(54) Title of the invention : METHOD AND APPARATUS FOR DERMATOLOGICAL TREATMENT

(51) International classification :A61Q19/08,A61B17/00
(31) Priority Document No :61/668,744
(32) Priority Date :06/07/2012
(33) Name of priority country :U.S.A.
(86) International Application No :PCT/US2013/049445
Filing Date :05/07/2013
(87) International Publication No :WO 2014/008470
(61) Patent of Addition to Application Number :NA
Filing Date :NA
(62) Divisional to Application Number :NA
Filing Date :NA

(71)**Name of Applicant :**
1)THE GENERAL HOSPITAL CORPORATION
Address of Applicant :55 Fruit Street, Boston, Massachusetts 02114 UNITED STATES OF AMERICA
(72)**Name of Inventor :**
1)ANDERSON, Richard R.
2)AVRAM, Mathew
3)SAKAMOTO, Fernanda H.
4)LIMPIANGKANAN, Wikunda
5)FARINELLI, William A.

(57) Abstract :
Exemplary methods and systems can be provided for resurfacing of skin that include formation of a plurality of small holes, e.g., having widths greater than about 0.2 mm and less than about 0.7 mm or 0.5 mm, using a mechanical apparatus. Compressive and/or tensile forces can then be applied to the treated region of skin as the damage heals to facilitate hole closure, and provide enhanced and/or directional shrinkage of the treated skin area.

No. of Pages : 37 No. of Claims : 24

(12) PATENT APPLICATION PUBLICATION
(19) INDIA
(22) Date of filing of Application :23/12/2014
(21) Application No.3023/KOLNP/2014 A
(43) Publication Date : 08/05/2015

(54) Title of the invention : LOCATION HISTORY FILTERING

(51) International classification	:G01S 5/00,H04W4/00
(31) Priority Document No	:61/664,144
(32) Priority Date	:25/06/2012
(33) Name of priority country	:U.S.A.
(86) International Application No	:PCT/US2013/047655
Filing Date	:25/06/2013
(87) International Publication No	:WO 2014/004532
(61) Patent of Addition to Application Number	:NA
Filing Date	:NA
(62) Divisional to Application Number	:NA
Filing Date	:NA

(71)**Name of Applicant :**
1)GOOGLE INC.
Address of Applicant :1600 AMPHITHEATRE PARKWAY, MOUNTAIN VIEW, CALIFORNIA 94043 UNITED STATES OF AMERICA
(72)**Name of Inventor :**
1)KIRMSE, ANDREW
2)GULTEKIN, GOKAY BARIS

(57) Abstract :
In general, techniques, devices, and systems for filtering location information received from multiple computing devices are described. In one example, a method includes receiving a first plurality of location indicators from a first mobile computing device and a second plurality of location indicators from a second mobile computing device, wherein the first and second computing devices are both associated with a single user and the first and second pluralities of location indicators are representative of geographical locations at which each of the respective first and second mobile computing devices has been located. The method may also include determining a subset of the location indicators for a period of time, all location indicators included in the subset being associated with the one of the first or second mobile computing devices that moved with the user during the period of time, and outputting information related to the subset of the location indicators.

No. of Pages : 39 No. of Claims : 16

(12) PATENT APPLICATION PUBLICATION
(19) INDIA
(22) Date of filing of Application :23/12/2014
(21) Application No.3024/KOLNP/2014 A
(43) Publication Date : 08/05/2015

(54) Title of the invention : COLPOTOMY CUP-LIKE STRUCTURE AND INTRAUTERINE MANIPULATOR INCLUDING SAME

(51) International classification	:A61B17/42,A61M29/02,A61B17/3209
(31) Priority Document No	:13/541,956
(32) Priority Date	:05/07/2012
(33) Name of priority country	:U.S.A.
(86) International Application No Filing Date	:PCT/US2013/046851 :20/06/2013
(87) International Publication No	:WO 2014/007999
(61) Patent of Addition to Application Number Filing Date	:NA :NA
(62) Divisional to Application Number Filing Date	:NA :NA

(71)**Name of Applicant :**
1)CLINICAL INNOVATIONS, LLC
Address of Applicant :747 West 4170 South, Murray, UT 84123 UNITED STATES OF AMERICA
(72)**Name of Inventor :**
1)HORTON, Jeremy, C.
2)DIXON, Richard, A.

(57) Abstract :
A cup-like structure for engaging a cervix of a patient includes a rim, and includes a base defining an aperture through which one or more tubular members of a uterine manipulator may extend into the uterus. The cup-like structure is made from one or more of a polyphthalamide (PPA) material and a polyetheretherketone (PEEK) material. A uterine manipulator including a cup-like structure is also disclosed.

No. of Pages : 25 No. of Claims : 15

(12) PATENT APPLICATION PUBLICATION
(19) INDIA
(22) Date of filing of Application :23/12/2014
(21) Application No.3025/KOLNP/2014 A
(43) Publication Date : 08/05/2015

(54) Title of the invention : BRAKE DISC

(51) International classification :F16D65/12,F16D65/847
(31) Priority Document No :12382271.0
(32) Priority Date :06/07/2012
(33) Name of priority country :EPO
(86) International Application No :PCT/ES2013/070459
Filing Date :03/07/2013
(87) International Publication No :WO 2014/006251
(61) Patent of Addition to Application Number :NA
Filing Date :NA
(62) Divisional to Application Number :NA
Filing Date :NA

(71)**Name of Applicant :**
1)LINGOTES ESPECIALES, S.A.
Address of Applicant :Colmenares, 5, E-47004 Valladolid SPAIN
(72)**Name of Inventor :**
1)MURUZÁBAL RIVERO, Javier
2)MURUZÁBAL RIVERO, Mª de Ujué
3)VILLACÉ DÍEZ, Enrique
4)DÍEZ VIELBA, Pedro José
5)LUENGO HERRERO, Alberto
6)VELASCO FERNÁNDEZ, Jacobo
7)SÁNCHEZ RODRÍGUEZ, Raquel
8)ANDRÉS DÍEZ, Marta
9)GONZÁLEZ HERNÁNDEZ, Manuel I.
10)RODRÍGUEZ PÉREZ DEL RIO, Mario
11)CAÑIBANO ÁLVAREZ, Esteban

(57) Abstract :
Brake disc for vehicles comprising a set of through holes, each through hole comprising in turn, a first diameter (ØM) and a second diameter (Øm), this second diameter (Øm) being lower than the first diameter (ØM). Furthermore, the through holes comprise a first center (M) and a second center (m) of first diameter (ØM) and the second diameter (Øm), respectively, being offset from each other with respect to a perpendicular of the first friction surface, while the projection of the second diameter (Øm) being contained within the first diameter (ØM).

No. of Pages : 25 No. of Claims : 11

(12) PATENT APPLICATION PUBLICATION
(19) INDIA
(22) Date of filing of Application :31/12/2014
(21) Application No.3122/KOLNP/2014 A
(43) Publication Date : 08/05/2015

(54) Title of the invention : DC POWER SUPPLY DEVICE, AND CONTROL METHOD FOR DC POWER SUPPLY DEVICE

(51) International classification :H02J1/00
(31) Priority Document No :NA
(32) Priority Date :NA
(33) Name of priority country :NA
(86) International Application No :PCT/JP2012/072602
Filing Date :05/09/2012
(87) International Publication No :WO 2014/038013
(61) Patent of Addition to Application Number :NA
Filing Date :NA
(62) Divisional to Application Number :NA
Filing Date :NA

(71)**Name of Applicant :**
1)KYOSAN ELECTRIC MFG. CO., LTD.
Address of Applicant :29-1, Heiancho 2-chome, Tsurumi-ku, Yokohama-shi, Kanagawa 2300031 Japan
(72)**Name of Inventor :**
1)YUZURIHARA, Itsuo
2)ADACHI, Toshiyuki
3)KODAMA, Shinichi

(57) Abstract :
During restarting, the fluctuation of output voltage of each phase of an inverter and the fluctuation of voltage supplied to a load are inhibited by matching the phase of a pulse control signal when restarting and the phase of a pulse control signal during suspension. When supplying DC power to a plasma generation device, when arc discharge is generated in the plasma generation device, the supply of DC power is suspended to reduce damage to electrodes and substrates, and, when the arc discharge has extinguished, the supply of DC power is restarted. When suspending/restarting the DC output, the current flowing in the chopper is maintained as a circulating current during suspension, and this circulating current is supplied to the load when an inverter is restarted, thereby reducing the delay in the supply of the DC power to the load when restarting the DC output.

No. of Pages : 57 No. of Claims : 10

(12) PATENT APPLICATION PUBLICATION
(19) INDIA
(22) Date of filing of Application :13/11/2014
(21) Application No.2584/KOLNP/2014 A
(43) Publication Date : 08/05/2015

(54) Title of the invention : DRONEDARONE FOR USE IN LEISHMANIASIS, FORMULATIONS AND ASSOCIATIONS FOR USE IN LEISHMANIASIS

(51) International classification :A61K31/343,A61P33/02
(31) Priority Document No :61/650,182
(32) Priority Date :22/05/2012
(33) Name of priority country :U.S.A.
(86) International Application No :PCT/EP2013/060513
Filing Date :22/05/2013
(87) International Publication No :WO 2013/182423
(61) Patent of Addition to Application Number :NA
Filing Date :NA
(62) Divisional to Application Number :NA
Filing Date :NA

(71)**Name of Applicant :**
1)SANOFI
Address of Applicant :54 rue La Boétie, F-75008 Paris France
(72)**Name of Inventor :**
1)BEILLES, Stéphane
2)CHAMBONNET, Sandra
3)COLLAVERI, Jean-Pierre

(57) Abstract :
The invention relates to dronedarone or one of its pharmaceutically acceptable salts for the treatment of leishmaniasis, formulations and associations comprising dronedarone or one of its pharmaceutically acceptable salts for the treatment of leishmaniasis.

No. of Pages : 20 No. of Claims : 31

(12) PATENT APPLICATION PUBLICATION
(19) INDIA
(22) Date of filing of Application :13/11/2014
(21) Application No.2587/KOLNP/2014 A
(43) Publication Date : 08/05/2015

(54) Title of the invention : ANAEROBIC CURING FORMULATIONS FOR SEALING AND BLOCKING BOLTS AND NUTS

(51) International classification :C09J4/06,C09J133/00
(31) Priority Document No :NA
(32) Priority Date :NA
(33) Name of priority country :NA
(86) International Application No :PCT/IB2012/000968
Filing Date :18/05/2012
(87) International Publication No :WO 2013/171528
(61) Patent of Addition to Application Number :NA
Filing Date :NA
(62) Divisional to Application Number :NA
Filing Date :NA

(71)**Name of Applicant :**
1)TECNOLOGIC 3 S.R.L.
Address of Applicant :Via Parini, 94/a, I-20064 Gorgonzola (MI) ITALY
(72)**Name of Inventor :**
1)AITA, Gaspare
2)CALASSO, Antonio, Jr.

(57) Abstract :
Anaerobic curing formulations for sealing and/or blocking screws, nuts, bolts and screw or sealing caps are described. The sealing formulation comprises at least one acrylic resin and phenoxy-polyethoxy sulphate. The self-locking formulation comprises at least one diacrylate, an acrylic resin, a microencapsulated polymerisation initiator and a microencapsulated polymerisation accelerator. A method is described for coating a polymerization accelerator to obtain a microencapsulated polymerisation accelerator.

No. of Pages : 20 No. of Claims : 15

(12) PATENT APPLICATION PUBLICATION
(19) INDIA
(22) Date of filing of Application :13/11/2014
(21) Application No.2588/KOLNP/2014 A
(43) Publication Date : 08/05/2015

(54) Title of the invention : SYSTEM AND PROCESS FOR RETINA PHOTOTHERAPY

(51) International classification :A61F9/008
(31) Priority Document No :13/481,124
(32) Priority Date :25/05/2012
(33) Name of priority country :U.S.A.
(86) International Application No :PCT/US2013/037369
Filing Date :19/04/2013
(87) International Publication No :WO 2013/176810
(61) Patent of Addition to Application Number :NA
Filing Date :NA
(62) Divisional to Application Number :NA
Filing Date :NA

(71)**Name of Applicant :**
1)LUTTRULL, Jeffrey, K.
Address of Applicant :283 Carne Road, Ojai, CA 93023 UNITED STATES OF AMERICA
2)MARGOLIS, Benjamin
(72)**Name of Inventor :**
1)LUTTRULL, Jeffrey, K.
2)MARGOLIS, Benjamin

(57) Abstract :
A system and process for treating retinal diseases includes passing a plurality of radiant beams, i.e., laser light beams, through an optical lens or mask to optically shape the beams. The shaped beams are applied to at least a portion of the retina. Due to the selected parameters of the beams - pulse length, power and duty cycle - the beams can be applied to substantially the entire retina, including the fovea, without damaging retinal or foveal tissue, while still attaining the benefits of retinal phototherapy or photostimulation.

No. of Pages : 61 No. of Claims : 28

(12) PATENT APPLICATION PUBLICATION
(19) INDIA
(22) Date of filing of Application :22/12/2014
(21) Application No.3007/KOLNP/2014 A
(43) Publication Date : 08/05/2015

(54) Title of the invention : ARRANGEMENT FOR A DRUG DELIVERY DEVICE

(51) International classification :A61M13/00,A61M15/00
(31) Priority Document No :12178704.8
(32) Priority Date :31/07/2012
(33) Name of priority country :EPO
(86) International Application No :PCT/EP2013/065747
Filing Date :25/07/2013
(87) International Publication No :WO 2014/019940
(61) Patent of Addition to Application Number :NA
Filing Date :NA
(62) Divisional to Application Number :NA
Filing Date :NA

(71)**Name of Applicant :**
1)SANOFI SA
Address of Applicant :3 route de Montfleury, CH-1214 Vernier SWITZERLAND
(72)**Name of Inventor :**
1)MAYER, Stefan

(57) Abstract :
An arrangement (100) for a drug delivery device (200) is provided. The arrangement comprises a cap (1) defining a cavity (9) and a body (2), wherein the cap (1) or the body (2) comprise a recess (5), wherein the cap (1) or the body (2) is provided with a seal (11) further comprising a sealing surface (12). When the cap (1) is attached, the sealing surface (12) of the seal (11) seals a section (10) of the cavity (9). When the cap (1) is detached from the body (2), either the recess (5) is moved towards the side of the seal (11) which faces the section (10) of the cavity (9) or the seal (11) is moved towards the side of the recess (5) which faces the section of the cavity (9), and when either at least a part of the recess (5) has passed the sealing surface (12) or, when the sealing surface (12) has passed at least a part of the recess (5), this part of the recess (5) establishes a passageway (17) between the cavity (9) and the environment.

No. of Pages : 30 No. of Claims : 14

(12) PATENT APPLICATION PUBLICATION
(19) INDIA
(22) Date of filing of Application :22/12/2014
(21) Application No.3008/KOLNP/2014 A
(43) Publication Date : 08/05/2015

(54) Title of the invention : NETWORK SYNTHESIS DESIGN OF MICROWAVE ACOUSTIC WAVE FILTERS

(51) International classification :H03H9/46,H03H9/54
(31) Priority Document No :13/838,943
(32) Priority Date :15/03/2013
(33) Name of priority country :U.S.A.
(86) International Application No :PCT/US2014/029800
Filing Date :14/03/2014
(87) International Publication No :WO 2014/145113
(61) Patent of Addition to Application Number :NA
Filing Date :NA
(62) Divisional to Application Number :NA
Filing Date :NA

(71)**Name of Applicant :**
1)RESONANT INC.
Address of Applicant :110 CASTILIAN DRIVE, SUITE 100, SANTA BARBARA, CA 93117 UNITED STATES OF AMERICA
(72)**Name of Inventor :**
1)TURNER, Patrick, J.
2)SILVER, Richard, N.
3)WILLEMSEN CORTES, Balam Quitze Andres
4)RAIHN, Kurt, F.
5)FENZI, Neal, O.
6)HAMMOND, Robert, B.

(57) Abstract :
A method of designing an acoustic microwave filter in accordance with frequency response requirements. The method comprises selecting an initial filter circuit structure including a plurality of circuit elements comprising at least one resonant element and at least one other reactive circuit element, selecting lossless circuit response variables based on the frequency response requirements, selecting a value for each of the circuit elements based on the selected circuit response variables to create an initial filter circuit design, transforming the resonant element(s) and the other reactive circuit element(s) of the initial filter circuit design into at least one acoustic resonator model to create an acoustic filter circuit design, adding parasitic effects to the acoustic filter circuit design to create a pre-optimized filter circuit design, optimizing the pre-optimized filter circuit design to create a final filter circuit design, and constructing the acoustic microwave filter based on the final filter circuit design.

No. of Pages : 70 No. of Claims : 25

(12) PATENT APPLICATION PUBLICATION
(21) Application No.3030/KOLNP/2014 A
(19) INDIA
(22) Date of filing of Application :23/12/2014
(43) Publication Date : 08/05/2015

(54) Title of the invention : ANTENNA SYSTEM FOR CONTACTLESS MICROCIRCUIT

(51) International classification :G06K19/077
(31) Priority Document No :12 01865
(32) Priority Date :02/07/2012
(33) Name of priority country :France
(86) International Application No :PCT/FR2013/051487
Filing Date :26/06/2013
(87) International Publication No :WO 2014/006300
(61) Patent of Addition to Application Number :NA
Filing Date :NA
(62) Divisional to Application Number :NA
Filing Date :NA

(71)**Name of Applicant :**
1)INSIDE SECURE
Address of Applicant :Rue de la Carrière de Bachasson, CS 70025, Arteparc Bachasson, Bt. A, F-13590 Meyreuil FRANCE
(72)**Name of Inventor :**
1)CHARRAT, Bruno
2)PIC, Pierre

(57) Abstract :
The invention relates to a method of fabricating a microcircuit card, comprising steps consisting in: forming a first antenna coil (CC2) in a card (C2), the first antenna coil comprising a part (CL21) following the edge of the card, forming a module comprising a microcircuit (M1) and a second antenna coil (MC1) around and connected to the microcircuit, and implanting the module in the card at a precise position with respect to the edge of the card, the first antenna coil being coupled by induction to the second antenna coil, the first antenna coil being shaped in such a way that only a part of the second antenna coil is at a distance from the first antenna coil of less than 5% of the width of the second antenna coil.

No. of Pages : 23 No. of Claims : 16

(12) PATENT APPLICATION PUBLICATION
(19) INDIA
(22) Date of filing of Application :10/12/2014
(21) Application No.2878/KOLNP/2014 A
(43) Publication Date : 08/05/2015

(54) Title of the invention : ETHANOL REFINING PROCESS USING INTERMEDIATE REBOILER

(51) International classification :C07C29/80
(31) Priority Document No :13/722,060
(32) Priority Date :20/12/2012
(33) Name of priority country :U.S.A.
(86) International Application No :PCT/US2013/077045
Filing Date :20/12/2013
(87) International Publication No :WO 2014/100645
(61) Patent of Addition to Application Number :NA
Filing Date :NA
(62) Divisional to Application Number :NA
Filing Date :NA

(71)**Name of Applicant :**
1)CELANESE INTERNATIONAL CORPORATION
Address of Applicant :222 W. Las Colinas Blvd., Suite 900N, Irving, Texas 75039, U.S.A.
(72)**Name of Inventor :**
1) Nathan Kirk POWELL

(57) Abstract :
The present invention relates to processes for producing and recovering ethanol using an intermediate reboiler. An intermediate stream may be withdrawn from a removal zone of a distillation column and recirculated through the intermediate reboiler to the distillation column. The distillation column may also comprise a bottoms reboiler.

No. of Pages : 56 No. of Claims : 15

(12) PATENT APPLICATION PUBLICATION
(21) Application No.2987/KOLNP/2014 A
(19) INDIA
(22) Date of filing of Application :19/12/2014
(43) Publication Date : 08/05/2015

(54) Title of the invention : SOFT TIP CANNULA

(51) International classification :A61M5/34
(31) Priority Document No :61/672,550
(32) Priority Date :17/07/2012
(33) Name of priority country :U.S.A.
(86) International Application No :PCT/US2013/048867
Filing Date :01/07/2013
(87) International Publication No :WO 2014/014644
(61) Patent of Addition to Application Number :NA
Filing Date :NA
(62) Divisional to Application Number :NA
Filing Date :NA

(71)**Name of Applicant :**
1)ALCON RESEARCH, LTD.
Address of Applicant :6201 South Freeway, Fort Worth, Texas 76134 UNITED STATES OF AMERICA
(72)**Name of Inventor :**
1)ABT, Niels
2)WEHRLI, Hans Jürg
3)KROMER, Heiko

(57) Abstract :
The present disclosure describes numerous example medical instruments that include an elongated portion having a proximal end and a distal end, and a passage defined therethrough and a soft tip coupled to the distal end of the elongated portion. The tip may be formed from a soft material. In some instances, the soft material may have a hardness less than the material forming the elongated portion. The tip may also include a passage that may be of a substantially equivalent size as the passage of the elongated portion. The tip may be coupled to the distal end of the elongated portion at an engagement site having a surface area greater than a cross-sectional area of the elongated portion.

No. of Pages : 33 No. of Claims : 23

(12) PATENT APPLICATION PUBLICATION
(19) INDIA
(22) Date of filing of Application :19/12/2014
(21) Application No.2988/KOLNP/2014 A
(43) Publication Date : 08/05/2015

(54) Title of the invention : PROTECTIVE COVER FOR DISPOSABLE INJECTION NEEDLES

(51) International classification :A61M5/32
(31) Priority Document No :1250737-2
(32) Priority Date :29/06/2012
(33) Name of priority country :Sweden
(86) International Application No :PCT/SE2013/050699
Filing Date :14/06/2013
(87) International Publication No :WO 2014/003632
(61) Patent of Addition to Application Number :NA
Filing Date :NA
(62) Divisional to Application Number :NA
Filing Date :NA

(71)**Name of Applicant :**
1)LAPONIA INNOVATIO AB
Address of Applicant :Fiolstigen 2 S-982 35 Gällivare SWEDEN
(72)**Name of Inventor :**
1)MATHIASSON, Margaretha

(57) Abstract :
A protective cover (4) to be used with disposable injection needles (1), such as those used for injection of insulin, which injection needles comprise a base (3) and a needle (2) fastened in the base, said protective cover comprising a hood (9) pivotably fastened on the base, said hood (9) being arranged to be pivotable, with the one and the same hand that holds a syringe on which the injection needle is arranged, between an inactive position at the side of the needle (2) of the injection needle and an active position in front of the needle (2) seen in the longitudinal direction of the needle.

No. of Pages : 12 No. of Claims : 5

(12) PATENT APPLICATION PUBLICATION
(19) INDIA
(22) Date of filing of Application :11/12/2014
(21) Application No.2896/KOLNP/2014 A
(43) Publication Date : 08/05/2015

(54) Title of the invention : A CONSTRUCTION AND A TENSION ELEMENT COMPRISING A CABLE AND ONE OR MORE STRAKES

(51) International classification :E01D11/00,E01D11/02,E01D11/04
(31) Priority Document No :12174089.8
(32) Priority Date :28/06/2012
(33) Name of priority country :EPO
(86) International Application No :PCT/EP2013/063654
Filing Date :28/06/2013
(87) International Publication No :WO 2014/001514
(61) Patent of Addition to Application Number :NA
Filing Date :NA
(62) Divisional to Application Number :NA
Filing Date :NA

(71)**Name of Applicant :**
1)DANMARKS TEKNISKE UNIVERSITET
Address of Applicant :Anker Engelunds Vej 1, DK-2800 Lyngby DENMARK
(72)**Name of Inventor :**
1)GEORGAKIS, Christos Thomas
2)KLEISSL, Kenneth

(57) Abstract :
The invention provides a construction comprising a structural element and at least one cable (101) arranged in tension to carry at least a part of the weight of the structural element. The cable defines an outer surface (102) onto which at least one strake (104) forms a protrusion for reducing rain and wind induced vibrations. The strake has a height being a distance from a strake root part connected to the outer surface of the cable and a strake end part terminating the strake outwards away from the cable, and the strake has a width being transverse to the height, the width decreasing in the direction from the strake root part towards the strake end part. The height is less than 5 percent of the diameter of the cable. Furthermore, the strake comprises a first strake surface portion facing away from the cable, which first strake surface portion is concave or straight.

No. of Pages : 20 No. of Claims : 10

(12) PATENT APPLICATION PUBLICATION
(21) Application No.2897/KOLNP/2014 A
(19) INDIA
(22) Date of filing of Application :12/12/2014
(43) Publication Date : 08/05/2015

(54) Title of the invention : CALIPER BRAKE APPARATUS

(51) International classification :F16D65/18,B61H5/00,F16D65/14
(31) Priority Document No :P2012-173814
(32) Priority Date :06/08/2012
(33) Name of priority country :Japan
(86) International Application No :PCT/JP2013/070917
Filing Date :01/08/2013
(87) International Publication No :WO 2014/024775
(61) Patent of Addition to Application Number :NA
Filing Date :NA
(62) Divisional to Application Number :NA
Filing Date :NA

(71)**Name of Applicant :**
1)KAYABA INDUSTRY CO., LTD.
Address of Applicant :World Trade Center Bldg., 4-1, Hamamatsu-cho 2-chome, Minato-ku, Tokyo 1056111 Japan
(72)**Name of Inventor :**
1)Tsutomu SUZUKI
2)OOKAWARA Yoshiyuki

(57) Abstract :
The caliper brake device is provided with: a guide plate for supporting a brake shoe; anchor pins for supporting the guide plate and which are provided on the main caliper body so as to advance and retract freely; a piston provided on the main caliper body so as to advance and retract freely; a piston plate that is secured to the piston and is supported by the anchor pins; an elastic membrane provided so as to define a pressure chamber inside the main caliper body and which moves the brake shoe by means of the piston, piston plate and guide plate; and a middle member disposed between the piston plate and the guide plate. By the middle member being interposed between the piston plate and the guide plate, a gap is formed between the piston plate and the guide plate.

No. of Pages : 23 No. of Claims : 12

(12) PATENT APPLICATION PUBLICATION
(21) Application No.3010/KOLNP/2014 A
(19) INDIA
(22) Date of filing of Application :22/12/2014
(43) Publication Date : 08/05/2015

(54) Title of the invention : A SUPPORTING DEVICE FOR PHOTOVOLTAIC PANELS IN TRACKING PHOTOVOLTAIC SYSTEMS

(51) International classification :F24J2/54,F24J2/52
(31) Priority Document No :PD2012A000174
(32) Priority Date :31/05/2012
(33) Name of priority country :Italy
(86) International Application No :PCT/IB2013/054425
Filing Date :29/05/2013
(87) International Publication No :WO 2013/179233
(61) Patent of Addition to Application Number :NA
Filing Date :NA
(62) Divisional to Application Number :NA
Filing Date :NA

(71)**Name of Applicant :**
1)CONVERT ITALIA S.P.A.
Address of Applicant :Via del Serafico, 200 I-00142 Roma ITALY
(72)**Name of Inventor :**
1)DE CATALDO, Marco
2)MORO, Giuseppe
3)TIMIDEI, Antonio

(57) Abstract :
A supporting device for photovoltaic panels in tracking photovoltaic systems comprises at least one supporting upright extending substantially longitudinally and extending from an installation surface of the system, a fixing plate for the photovoltaic panel and a connecting member between the upright and the plate that is supported on the upright so as to keep the panels spaced from the installation surface during operation of the system, and comprises a rolling member capable of connecting the fixing plate in a rotary manner about a tracking axis and further to enable the fixing plate to rotate at least in a limited manner about a first adjustment axis substantially orthogonal to the tracking axis and the direction of longitudinal extension of the upright.

No. of Pages : 25 No. of Claims : 13

(12) PATENT APPLICATION PUBLICATION
(19) INDIA
(22) Date of filing of Application :16/12/2014
(21) Application No.2959/KOLNP/2014 A
(43) Publication Date : 08/05/2015

(54) Title of the invention : METHOD AND APPARATUS FOR TREATMENT OF BIOMASS SUBSTRATES

(51) International classification :C08B16/00
(31) Priority Document No :61/663,315
(32) Priority Date :22/06/2012
(33) Name of priority country :U.S.A.
(86) International Application No :PCT/US2013/047149
Filing Date :21/06/2013
(87) International Publication No :WO 2013/192572
(61) Patent of Addition to Application Number :NA
Filing Date :NA
(62) Divisional to Application Number :NA
Filing Date :NA

(71)**Name of Applicant :**
1)SUGANIT SYSTEMS, INC
Address of Applicant :10903 Hunt Club Road, Reston, Virginia 20190 UNITED STATES OF AMERICA
(72)**Name of Inventor :**
1)PARIPATI, Praveen
2)DADI, Anantharam

(57) Abstract :
A system and method for the treatment of biomass comprising mixing a biomass with an ionic liquid (IL) to swell the biomass and electromagnetic (EM) heating, preferably radiofrequency (RF) heating or infrared (IR) heating, said biomass. Additionally, a method of acidolysis of biomass comprising mixing biomass in an ionic liquid (IL) to swell the biomass; adding an acid, to lower the pH of the biomass below pH 7; applying radio frequency (RF) heating or infrared (IR) heating to the biomass to heat to a target temperature range; applying ultrasonic heating, electromagnetic (EM) heating, convective heating, conductive heating, or combinations thereof, to the biomass to maintain the biomass at a target temperature range; washing the treated biomass; and recovering sugars and release lignin.

No. of Pages : 111 No. of Claims : 126

(12) PATENT APPLICATION PUBLICATION
(19) INDIA
(22) Date of filing of Application :24/12/2014
(21) Application No.3045/KOLNP/2014 A
(43) Publication Date : 08/05/2015

(54) Title of the invention : RANKING NEARBY DESTINATIONS BASED ON VISIT LIKELIHOODS AND PREDICTING FUTURE VISITS TO PLACES FROM LOCATION HISTORY

(51) International classification :G06N5/02,G06F17/30
(31) Priority Document No :61/663,058
(32) Priority Date :22/06/2012
(33) Name of priority country :U.S.A.
(86) International Application No :PCT/US2013/047186
Filing Date :21/06/2013
(87) International Publication No :WO 2013/192591
(61) Patent of Addition to Application Number :NA
Filing Date :NA
(62) Divisional to Application Number :NA
Filing Date :NA

(71)**Name of Applicant :**
1)GOOGLE INC.
Address of Applicant :1600 Amphitheatre Parkway, Mountain View, California 94043 UNITED STATES OF AMERICA
(72)**Name of Inventor :**
1)YANG, Guang
2)UDESHI, Tushar
3)KIRMSE, Andrew
4)PRAUN, Emil
5)BELLVER, Pablo
6)MIERLE, Keir Banks

(57) Abstract :
In some examples, systems and techniques can provide a user with relevant contact information based on the users location. In some examples, the users location is provided to a server, which processes the users contacts and other information associated with the user to determine which of the users contacts are relevant to the users current location. Relevant contacts can then be presented to the user. In other examples, systems and techniques can predict places that a user is likely to visit in the near future and automatically provide the user with information about such places. A prediction server can retrieve the users location history and, based on the location history, use any of a variety of models to predict places that the user is likely to visit in the future, then prior to the user visiting the place, information relating to that place can be presented to the user.

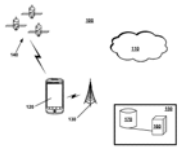

No. of Pages : 58 No. of Claims : 45

(12) PATENT APPLICATION PUBLICATION
(19) INDIA
(22) Date of filing of Application :24/12/2014
(21) Application No.3046/KOLNP/2014 A
(43) Publication Date : 08/05/2015

(54) Title of the invention : SYNTHETIC-FIBER ROPE

(51) International classification	:D07B1/02,A01K 75/00
(31) Priority Document No	:2012-237477
(32) Priority Date	:29/10/2012
(33) Name of priority country	:Japan
(86) International Application No	:PCT/JP2013/078680
Filing Date	:23/10/2013
(87) International Publication No	:WO 2014/069299
(61) Patent of Addition to Application Number	:NA
Filing Date	:NA
(62) Divisional to Application Number	:NA
Filing Date	:NA

(71)**Name of Applicant :**
1)OBAMA ROPE MFG., CO., LTD.
Address of Applicant :3-10, TADA, OBAMA-SHI, FUKUI 9170026 Japan
2)ASHIMORI INDUSTRY CO., LTD.
(72)**Name of Inventor :**
1)KIKUCHI, YUZO
2)KINOSHITA, YOSHIHIRO
3)KOSAKA, TOSHIYUKI
4)MORIMOTO, SOSUKE

(57) Abstract :
Provided is a synthetic-fiber rope that has high tensile strength and a small elongation coefficient. Said synthetic-fiber rope utilizes a dramatically improved percentage of the tensile strength of the synthetic fibers used, exhibiting an elongation coefficient that is nearly the same as that of said synthetic fibers. This synthetic-fiber rope is characterized by comprising a plurality of strands twisted together or otherwise combined, each of said strands being formed from: a woven tube woven from warp and weft threads of synthetic fiber; and a plurality of parallel synthetic core fibers inside said woven tube.

No. of Pages : 25 No. of Claims : 6

(12) PATENT APPLICATION PUBLICATION
(19) INDIA
(22) Date of filing of Application :26/12/2014
(21) Application No.3063/KOLNP/2014 A
(43) Publication Date : 08/05/2015

(54) Title of the invention : NOVEL PRIME-BOOSTING REGIMENS INVOLVING IMMUNOGENIC POLYPEPTIDES ENCODED BY POLYNUCLEOTIDES

(51) International classification :A61K39/155,C12N15/861,C12N15/863
(31) Priority Document No :PCT/EP2012/063196
(32) Priority Date :05/07/2012
(33) Name of priority country :EPO
(86) International Application No :PCT/EP2013/064286
Filing Date :05/07/2013
(87) International Publication No :WO 2014/006191
(61) Patent of Addition to Application Number :NA
Filing Date :NA
(62) Divisional to Application Number :NA
Filing Date :NA

(71)**Name of Applicant :**
1)GLAXOSMITHKLINE BIOLOGICALS SA
Address of Applicant :89 rue de L'Institut B-1330 Rixensart BELGIUM
(72)**Name of Inventor :**
1)NICOSIA, Alfredo
2)CORTESE, Ricardo
3)VITELLI, Alessandra

(57) Abstract :
The present invention relates to administration regimens which are particularly suited for vaccine composition comprising polynucleotides which encode immunogenic polypeptides. Said administration regimens involve the repeated administration of a vaccine composition and enhance the immune response against the immunogenic polypeptide.

No. of Pages : 52 No. of Claims : 26

(12) PATENT APPLICATION PUBLICATION
(19) INDIA
(22) Date of filing of Application :26/12/2014
(21) Application No.3064/KOLNP/2014 A
(43) Publication Date : 08/05/2015

(54) Title of the invention : TREATMENT OF MANGANESE-CONTAINING MATERIALS

(51) International classification :C22B 47/00
(31) Priority Document No :61/681,193
(32) Priority Date :09/08/2012
(33) Name of priority country :U.S.A.
(86) International Application No :PCT/US2013/053736
Filing Date :06/08/2013
(87) International Publication No :WO 2014/025744
(61) Patent of Addition to Application Number :NA
Filing Date :NA
(62) Divisional to Application Number :NA
Filing Date :NA

(71)**Name of Applicant :**
1)DEEPGREEN ENGINEERING PTE. LTD.
Address of Applicant :146 ROBINSON ROAD, #07-01, SINGAPORE 068909 SINGAPORE
(72)**Name of Inventor :**
1)DRINKARD, WILLIAM, F.
2)WOERNER, HANS, J.
3)NIXIN, WILLIAM, M.

(57) Abstract :
An improved method for treating manganese-containing materials, such as seafloor manganese nodules, by leaching such materials with aqueous HNO3 and polymerized nitric oxide (N203)x, and more particularly to methods for recovering valuable constituents from such nodules, especially manganese, cobalt, nickel, iron, and copper. It also provides a method to leach manganese-containing material to release any titanium, vanadium, cerium, molybdenum and other metals from the manganese oxides and to make them available to be recovered, as well as providing a method of producing a fertilizer grade nitrate product.

No. of Pages : 14 No. of Claims : 30

(12) PATENT APPLICATION PUBLICATION
(21) Application No.2967/KOLNP/2014 A
(19) INDIA
(22) Date of filing of Application :17/12/2014
(43) Publication Date : 08/05/2015

(54) Title of the invention : APPARATUS FOR ADAPTING A SEATBELT FOR A CHILD

(51) International classification :B60R22/10,B60R22/02
(31) Priority Document No :61/652,338
(32) Priority Date :29/05/2012
(33) Name of priority country :U.S.A.
(86) International Application No :PCT/IL2013/050454
Filing Date :28/05/2013
(87) International Publication No :WO 2013/179283
(61) Patent of Addition to Application Number :NA
Filing Date :NA
(62) Divisional to Application Number :NA
Filing Date :NA

(71)**Name of Applicant :**
1)CARFOLDIO LTD.
Address of Applicant :HaLevona 10, 4335543 Raanana ISRAEL
(72)**Name of Inventor :**
1)SUMROY, Jon

(57) Abstract :
Apparatus for adapting an adult three-point seatbelt for securing a child, the seatbelt comprising a belt extending from above the shoulder to an anchor point connected to chassis of vehicle, and a clasp attached to the chassis on opposite side of an occupant of the seat, such that the belt may be drawn downwards and across the occupant to engage the clasp, thereby restraining the occupant with both sash and lap sections of the seatbelt, the apparatus comprising: a mat with side catches for engaging the lap section of the seatbelt and holding it down over the legs of the child, and a strap fixed to the mat and having a clip at a distal end thereof, for extending behind the child, and the clip for clippably engaging the belt extending from the drum, to bring the sash section of the belt down, over the shoulder of the child.

No. of Pages : 26 No. of Claims : 20

(12) PATENT APPLICATION PUBLICATION
(21) Application No.2968/KOLNP/2014 A
(19) INDIA
(22) Date of filing of Application :17/12/2014
(43) Publication Date : 08/05/2015

(54) Title of the invention : DEVICE FOR OPTICALLY REPRESENTING INTRAOCULAR PRESSURE, AND A METHOD FOR SAME

(51) International classification	:A61B 3/16,A61B 5/10
(31) Priority Document No	:10 2012 1051 29.1
(32) Priority Date	:13/06/2012
(33) Name of priority country	:Germany
(86) International Application No	:PCT/DE2013/100214
Filing Date	:12/06/2013
(87) International Publication No	:WO 2013/185757
(61) Patent of Addition to Application Number	:NA
Filing Date	:NA
(62) Divisional to Application Number	:NA
Filing Date	:NA

(71)**Name of Applicant :**
1)CHRISTIAN-ALBRECHTS-UNIVERSITÄT ZU KIEL
Address of Applicant :CHRISTIAN-ALBRECHTS-PLATZ 4, 24118 KIEL GERMANY
(72)**Name of Inventor :**
1)NAZINZADEH, YOUSEF
2)GERKEN, MARTINA
3)KARROCK, TORBEN
4)ROIDER, JOHANN

(57) Abstract :
The invention relates to a device for optically representing intraocular pressure, comprising an arrangement which is implanted into the eye and has a membrane that curves outwards when the intraocular pressure changes, and a contact surface, these altering the polarization for a spectral range of incident and reflected light in the region of their contact with one another, as well as a read-out arrangement that optically reproduces a planar image of the light which is reflected by the photonic crystal and whose polarization has been altered, and that comprises a polarization filter for the irradiated light and the light reflected by the photonic crystal. The invention also relates to a method for measuring intraocular pressure.

No. of Pages : 10 No. of Claims : 9

(12) PATENT APPLICATION PUBLICATION
(19) INDIA
(22) Date of filing of Application :17/12/2014
(21) Application No.2961/KOLNP/2014 A
(43) Publication Date : 08/05/2015

(54) Title of the invention : A VACUUM CLEANING APPARATUS

(51) International classification :A47L9/04
(31) Priority Document No :1208873.8
(32) Priority Date :17/05/2012
(33) Name of priority country :U.K.
(86) International Application No :PCT/GB2013/051229
Filing Date :13/05/2013
(87) International Publication No :WO 2013/171468
(61) Patent of Addition to Application Number :NA
Filing Date :NA
(62) Divisional to Application Number :NA
Filing Date :NA

(71)**Name of Applicant :**
1)EAGLESTONE, Brian John
Address of Applicant :BJE Design Limited, The Bank, Shearlheath, Leominster, HR6 9RJ, UNITED KINGDOM
(72)**Name of Inventor :**
1)EAGLESTONE, Brian John

(57) Abstract :
A vacuum cleaning apparatus comprises a cleaning head (102) having a lower surface (110) which in use is located adjacent a surface to be cleaned. An airflow channel (112) is defined within the cleaning head (102) having a first end configured for connection to a vacuum source, and a second end defining an opening (118) proximate the lower surface (110) of the cleaning head (102) through which a vacuum is applied to the cleaning surface. At least one vibration element (130) is located proximate the lower surface (110) of the cleaning head (102) that is arranged to apply vibration to the cleaning surface when the cleaning head is located adjacent thereto. In addition, at least one vibration actuator (136) is included for causing the at least one vibration element (130) to vibrate. The at least one vibration actuator (136) is located within a sealed enclosure which is sealed from the airflow through the airflow channel (112) to isolate the actuator (136) therefrom.

No. of Pages : 72 No. of Claims : 28

(12) PATENT APPLICATION PUBLICATION
(19) INDIA
(22) Date of filing of Application :15/12/2014
(21) Application No.2923/KOLNP/2014 A
(43) Publication Date : 08/05/2015

(54) Title of the invention : MACHINE COMPONENT OF A DRIVE TRAIN AND METHOD FOR CONFIGURING AND/OR PUTTING INTO OPERATION AND/OR OPERATING SUCH A DRIVE TRAIN

(51) International classification :F01K13/02,F22B35/18,G05B13/02
(31) Priority Document No :12172185.6
(32) Priority Date :15/06/2012
(33) Name of priority country :EPO
(86) International Application No :PCT/EP2013/061943
Filing Date :11/06/2013
(87) International Publication No :WO 2013/186183
(61) Patent of Addition to Application Number :NA
Filing Date :NA
(62) Divisional to Application Number :NA
Filing Date :NA

(71)**Name of Applicant :**
1)SIEMENS AKTIENGESELLSCHAFT
Address of Applicant :Wittelsbacherplatz 2, 80333 München GERMANY
(72)**Name of Inventor :**
1)REIMERS, Jan-Dirk
2)KLEIN-HITPASS, Arno
3)DINTER, Ralf-Martin

(57) Abstract :
The invention relates to a machine component of a drive train and to a method for configuring and/or putting into operation and/or operating such a drive train (2) of a machine (1), which drive train comprises machine components that can be controlled by means of a control unit (9) as well as non-controllable machine components (5-8), wherein the method comprises the steps of: equipping at least a portion of the non-controllable machine components (5-8) with component-specific data storage devices (12-15), on which in each case design-related technical data of the non-controllable machine components (5-8) are stored, which data are relevant for the control of one or several controllable machine components (3-4); transmitting the data stored on the data storage devices (12-15) to the control unit (9); and controlling one or more controllable machine components (3, 4) by using the control unit (9) and on the basis of the data transmitted.

No. of Pages : 40 No. of Claims : 11

(12) PATENT APPLICATION PUBLICATION
(21) Application No.2924/KOLNP/2014 A
(19) INDIA
(22) Date of filing of Application :15/12/2014
(43) Publication Date : 08/05/2015

(54) Title of the invention : CARRIER, TWO-COMPONENT DEVELOPER, SUPPLEMENTAL DEVELOPER, IMAGE FORMING METHOD, PROCESS CARTRIDGE AND IMAGE FORMING APPARATUS

(51) International classification :G03G9/113,G03G9/09
(31) Priority Document No :2012-143841
(32) Priority Date :27/06/2012
(33) Name of priority country :Japan
(86) International Application No :PCT/JP2013/068193
Filing Date :26/06/2013
(87) International Publication No :WO 2014/003200
(61) Patent of Addition to Application Number :NA
Filing Date :NA
(62) Divisional to Application Number :NA
Filing Date :NA

(71)**Name of Applicant :**
1)RICOH COMPANY, LTD.
Address of Applicant :3-6, Nakamagome 1-chome, Ohta-ku, Tokyo, 1438555 Japan
(72)**Name of Inventor :**
1)KISHIDA, Hiroyuki
2)YAGUCHI, Shigenori
3)TOHMATSU, Hiroshi
4)SAKATA, Koichi
5)IWATSUKI, Hitoshi
6)TANO, Toyoaki

(57) Abstract :
There is provided a carrier including magnetic core particles; and a coating layer on a surface of each of the magnetic core particles, wherein the coating layer contains electroconductive particles; wherein the electroconductive particles are electroconductive particles in which white inorganic pigments are coated with phosphorus-doped tin or tungsten-doped tin; and wherein a dope ratio of phosphorus or tungsten to tin in the phosphorus-doped tin or tungsten-doped tin is 0.010 to 0.100.

No. of Pages : 89 No. of Claims : 13

(12) PATENT APPLICATION PUBLICATION
(21) Application No.2925/KOLNP/2014 A
(19) INDIA
(22) Date of filing of Application :15/12/2014
(43) Publication Date : 08/05/2015

(54) Title of the invention : TRANSPORT METHOD, MANUFACTURING METHOD FOR DISPOSABLE WEARABLE ARTICLE, AS WELL AS WEARABLE ARTICLE, AND TRANSPORT DEVICE

(51) International classification :A61F13/15,A61F13/49
(31) Priority Document No :2012-152655
(32) Priority Date :06/07/2012
(33) Name of priority country :Japan
(86) International Application No :PCT/JP2013/003828
Filing Date :19/06/2013
(87) International Publication No :WO 2014/006834
(61) Patent of Addition to Application Number :NA
Filing Date :NA
(62) Divisional to Application Number :NA
Filing Date :NA

(71)**Name of Applicant :**
1)ZUIKO, CORPORATION
Address of Applicant :15-21, MINAMIBEFUCHO, SETTSU-SHI, OSAKA 5660045 Japan
(72)**Name of Inventor :**
1)MAEHARA, TOSHIYUKI
2)MAKIMURA, KAZUTOSHI
3)UMEBAYASHI, TOYOSHI

(57) Abstract :
Provided is a transport method for transporting processing parts to a transfer position at various different speeds while the quantity of processing parts to be transported per unit time is maintained. The transport method includes a speed varying step of varying speed of a first holding portion between a receiving position and a predetermined relay position (E2) by means of a speed change mechanism, by rotating, at constant speed, a drive wheel on which the first holding portion that is configured to receive an absorbent body (3) at the receiving position is supported via the speed change mechanism; a control step of controlling speed of a servo motor for driving rotation of second holding portions (31, 34) configured to hold the absorbent body (3), such that speed of the second holding portions (31, 34) becomes a receiving speed at which the second holding portions (31, 34) is able to receive the absorbent body (3) from the first holding portion at the relay position (E2) and becomes a predetermined transfer speed at a transfer position (E3), and such that the second holding portions (31, 34) arrive at the relay position (E2) and at the transfer position (E3) at a predetermined cycle; and a speed changing step of changing the transfer speed while the cycle is maintained.

No. of Pages : 41 No. of Claims : 11

(12) PATENT APPLICATION PUBLICATION
(21) Application No.3120/KOLNP/2014 A
(19) INDIA
(22) Date of filing of Application :31/12/2014
(43) Publication Date : 08/05/2015

(54) Title of the invention : UK-2 BIOSYNTHETIC GENES AND METHOD FOR IMPROVING UK-2 PRODUCTIVITY USING THE SAME

(51) International classification :A01N43/40,C12N9/00
(31) Priority Document No :2012-153986
(32) Priority Date :09/07/2012
(33) Name of priority country :Japan
(86) International Application No :PCT/JP2013/069081
Filing Date :08/07/2013
(87) International Publication No :WO 2014/010714
(61) Patent of Addition to Application Number :NA
Filing Date :NA
(62) Divisional to Application Number :NA
Filing Date :NA

(71)**Name of Applicant :**
1)MEIJI SEIKA PHARMA CO., LTD.
Address of Applicant :4-16, Kyobashi 2-chome, Chuo-ku, Tokyo, 1048002 Japan
(72)**Name of Inventor :**
1)KOBAYASHI, Koei
2)SUMIDA, Naomi
3)YANAI, Koji

(57) Abstract :
To provide a production method capable of mass production of UK-2 at low cost, the genomic DNA of Streptoverticillium sp. 3-7, which produces UK-2, was analyzed to identify a region expected to be a UK-2 biosynthetic gene cluster. Moreover, by colony hybridization, DNAs in the region were successfully isolated. Further, the DNAs were used to prepare a strain in which the genes present in the region were disrupted. The strain was found not to produce UK-2. It was verified that the genomic region was the UK-2 biosynthetic gene cluster. Furthermore, Streptoverticillium sp. 3-7 was transformed by introduction of a vector in which the isolated UK-2 biosynthetic gene cluster was inserted. It was also found out that the UK-2 productivity by the transformant was improved about 10 to 60 times or more in comparison with that of the parental strain. Moreover, it was revealed that 2 copies of the UK-2 biosynthetic gene cluster were present per cell in these transformants, respectively.

No. of Pages : 87 No. of Claims : 15

(12) PATENT APPLICATION PUBLICATION
(21) Application No.3121/KOLNP/2014 A
(19) INDIA
(22) Date of filing of Application :31/12/2014
(43) Publication Date : 08/05/2015

(54) Title of the invention : RETAINER SYSTEM FOR A MOBILE-TELEPHONY ANTENNA AND A MOBILE-TELEPHONY COMPONENT

(51) International classification :H01Q1/12
(31) Priority Document No :10 2012 011 892.9
(32) Priority Date :15/06/2012
(33) Name of priority country :Germany
(86) International Application No :PCT/EP2013/001755
Filing Date :13/06/2013
(87) International Publication No :WO 2013/185925
(61) Patent of Addition to Application Number :NA
Filing Date :NA
(62) Divisional to Application Number :NA
Filing Date :NA

(71)**Name of Applicant :**
1)KATHREIN-WERKE KG
Address of Applicant :Anton-Kathrein-Str. 1-3, 83022 Rosenheim GERMANY
(72)**Name of Inventor :**
1)MUMMERT, Wolfgang
2)WEBER, Stefan
3)WULFF, Torsten
4)GRIMM, Joachim

(57) Abstract :
The invention relates to an improved retainer system for a mobile-telephony antenna and a mobile-telephony component, which is characterised, inter alia, by the following features: - said mobile-telephony component (MK) is secured, on the carrier side, by a retainer system which is separate from the retainer device (11, 7) for said mobile-telephony antenna (MA), - the retainer system also comprises at least one carrier-side mobile-telephony component-retainer device (17), - said mobile-telephony component (MK) comprises at least one component-side mobile-telephony component-retainer device (25), - an interface and/or separating point (X) or a pivoting and/or displacement plane (E) is formed between said carrier-side mobile-telephony component- retainer device (17) and the respective component-side mobile-telephony component-retainer device (25), and - when the associated fixture means are released, the mounted mobile-telephony component (MK) may be removed, with the component-side mobile-telephony component-retainer device (25), in a lateral direction (SR) out of the spacing (A) by means of displacement and/or pivoting and/or rotation, leaving behind the carrier-side mobile-telephony component-retainer device (17) even with said mobile-telephony antenna (MA) remaining mounted.

No. of Pages : 60 No. of Claims : 16

(12) PATENT APPLICATION PUBLICATION
(19) INDIA
(22) Date of filing of Application :18/12/2014
(21) Application No.2979/KOLNP/2014 A
(43) Publication Date : 08/05/2015

(54) Title of the invention : HIGH EFFICIENCY AC DC ELECTRIC MOTOR, ELECTRIC POWER GENERATING SYSTEM WITH VARIABLE SPEED, VARIABLE POWER, GEOMETRIC ISOLATION AND HIGH EFFICIENCY CONDUCTING ELEMENTS

(51) International classification	:H02K53/00,H02K16/00,H02N11/00
(31) Priority Document No	:61/688,669
(32) Priority Date	:18/05/2012
(33) Name of priority country	:U.S.A.
(86) International Application No	:PCT/IB2013/054184
Filing Date	:21/05/2013
(87) International Publication No	:WO 2013/171728
(61) Patent of Addition to Application Number	:NA
Filing Date	:NA
(62) Divisional to Application Number	:NA
Filing Date	:NA

(71)**Name of Applicant :**
1)REDEMPTIVE TECHNOLOGIES, LIMITED
Address of Applicant :Akara Building, 24 De Castro Street, Wickhams Cay I, Road Town, Tortola VIRGIN ISLANDS, BRITISH
2)HOLCOMB,ROBERT RAY
(72)**Name of Inventor :**
1)HOLCOMB, Robert Ray

(57) Abstract :
A method and apparatus for reducing electromagnetic drag in an electric machine may include a laminated stator having wire slots disposed around the inner periphery spaced into sectors separated by a pole iron support structure. The slots contain induction windings. A series of wound lateral pole irons may be arranged around the inner periphery of the stator, the first ends of which extend into the slots in the sectors. A support structure supports the lateral pole irons by forming a circular opening concentric with the inner periphery of the stator. A rotor may be inserted into the circular opening of the lateral pole iron support structure and supported at the stator lateral pole iron ends by a support means. A plurality of rotor inserts may contain free- wheeling permanent magnet inserts spaced along an outer periphery of the rotor. The rotor may be inserted into the circular opening of the lateral pole iron support structure and the free -wheeling permanent magnet inserts may be inserted into cavities along the outer periphery of the rotor.

No. of Pages : 171 No. of Claims : 141

(12) PATENT APPLICATION PUBLICATION
(19) INDIA
(22) Date of filing of Application :19/12/2014
(21) Application No.2989/KOLNP/2014 A
(43) Publication Date : 08/05/2015

(54) Title of the invention : FLOWMETER

(51) International classification :G01F1/075,G01F15/14,G01F15/18
(31) Priority Document No :12174615.0
(32) Priority Date :02/07/2012
(33) Name of priority country :EPO
(86) International Application No :PCT/EP2013/063844
Filing Date :01/07/2013
(87) International Publication No :WO 2014/006001
(61) Patent of Addition to Application Number :NA
Filing Date :NA
(62) Divisional to Application Number :NA
Filing Date :NA

(71)**Name of Applicant :**
1)DIGMESA AG
Address of Applicant :Keltenstrasse 31, CH-2563 Ipsach SWITZERLAND
(72)**Name of Inventor :**
1)LAUBER, Stefan
2)SCHNEIDER, Stefan
3)SIGRIST, Martin
4)RUSCH, Christoph
5)FRELY, Jean-Claude

(57) Abstract :
A flowmeter for liquids has a measuring housing (10), which encloses and rotatably mounts an impeller (50), said measuring housing comprising a one-piece supply pipe (12) and discharge pipe (13), wherein the impeller is eccentrically arranged in the discharge pipe (13) after a nozzle-forming constriction (14). A sensor encoder is associated with the impeller and a sensor (90) which responds to the sensor encoder is provided on the measuring housing (10) for determining the amount of liquid flowing through the measuring housing (10) on the basis of the revolutions of the impeller. The outer diameter corresponding to the impeller is smaller than the nominal inner diameter of the discharge pipe (13), enabling it to be pushed into the one-piece pipe (12, 13).

No. of Pages : 35 No. of Claims : 13

(12) PATENT APPLICATION PUBLICATION
(19) INDIA
(22) Date of filing of Application :19/12/2014
(21) Application No.2990/KOLNP/2014 A
(43) Publication Date : 08/05/2015

(54) Title of the invention : FORMULATIONS CONTAINING PARAFFINIC OIL AND ANTI-SETTLING AGENT

(51) International classification :A01N61/02,A01N25/04,A01N25/30
(31) Priority Document No :61/655,417
(32) Priority Date :04/06/2012
(33) Name of priority country :U.S.A.
(86) International Application No :PCT/CA2012/050444
Filing Date :29/06/2012
(87) International Publication No :WO 2013/181738
(61) Patent of Addition to Application Number :NA
Filing Date :NA
(62) Divisional to Application Number :NA
Filing Date :NA

(71)**Name of Applicant :**
1)SUNCOR ENERGY INC.
Address of Applicant :P.O. Box 2844, 150-6 Avenue S.W., Calgary, Alberta T2P 3E3 CANADA
(72)**Name of Inventor :**
1)FEFER, Michael
2)LIU, Jun
3)RUO, Tomoki

(57) Abstract :
The present invention features a composition comprising a paraffinic oil, an emulsifier, a pigment, a silicone surfactant and an anti-settling agent. The present invention also features a method of controlling a disease, condition or injury caused by a pest of a plant, the method comprising applying to the plant the composition defined above. A method of making the composition is also disclosed.

No. of Pages : 83 No. of Claims : 73

(12) PATENT APPLICATION PUBLICATION
(19) INDIA
(22) Date of filing of Application :19/12/2014
(21) Application No.2991/KOLNP/2014 A
(43) Publication Date : 08/05/2015

(54) Title of the invention : CONTROLLING ACIDIC COMPOUNDS PRODUCED FROM OXY-COMBUSTION PROCESSES

(51) International classification :F23C5/00
(31) Priority Document No :61/665,886
(32) Priority Date :28/06/2012
(33) Name of priority country :U.S.A.
(86) International Application No :PCT/US2013/048454
Filing Date :28/06/2013
(87) International Publication No :WO 2014/004963
(61) Patent of Addition to Application Number :NA
Filing Date :NA
(62) Divisional to Application Number :NA
Filing Date :NA

(71)**Name of Applicant :**
1)BABCOCK & WILCOX POWER GENERATION GROUP, INC.
Address of Applicant :20 S. Van Buren Avenue, Barberton, OH 44203 UNITED STATES OF AMERICA
(72)**Name of Inventor :**
1)MCDONALD, Dennis, K.
2)DARDE, Arthur, EO
3)DUBETTIER-GRENIER, Richard

(57) Abstract :
The present invention relates generally to the field of emissions control and, in particular to a new and useful method and/or system by which to control, treat and/or mitigate various liquid-based acidic compounds that are produced during oxy- combustion (e.g., during a compression step and/or cooling step) from various gaseous acid compounds and/or gaseous acid precursor compounds (e.g., SOx, NOx, etc.). In one embodiment, the present invention relates to a method and/or system by which such one or more liquid-based acid compounds are recycled into the flue gases and/or into one or more of the emissions control and/or flue gas treatment equipment of an oxy-combustion power generation system.

No. of Pages : 35 No. of Claims : 33

(12) PATENT APPLICATION PUBLICATION
(19) INDIA
(22) Date of filing of Application :25/11/2014
(21) Application No.2703/KOLNP/2014 A
(43) Publication Date : 08/05/2015

(54) Title of the invention : DEMISTER, METHOD OF MODIFYING AN EXISTING WET-TYPE GAS SCRUBBER AND WET-TYPE GAS SCRUBBER

(51) International classification :B01D53/26,B01D53/78,B01D53/14
(31) Priority Document No :20125605
(32) Priority Date :04/06/2012
(33) Name of priority country: Finland
(86) International Application No :PCT/FI2013/050599
Filing Date :03/06/2013
(87) International Publication No :WO 2013/182748
(61) Patent of Addition to Application Number :NA
Filing Date :NA
(62) Divisional to Application Number :NA
Filing Date :NA

(71)**Name of Applicant :**
1)OUTOTEC () OY
Address of Applicant :Rauhalanpuisto 9 FI-02230 Espoo Finland
(72)**Name of Inventor :**
1)OLLILA, Janne
2)RÖNNBERG, Tom

(57) Abstract :
The invention relates to a demister (1) configured for installation to a wet-type gas scrubber (2). The wet-type gas scrubber (2) comprises a wet-scrubbing phase (3) and a liquid separation phase (4). The liquid separation phase (4) includes a liquid collecting tank (5) and a cyclonic droplet separation tower (6) attached on the liquid collecting tank for receiving a gas stream therefrom. The demister (1) comprises a mist eliminator unit (A) for removal of liquid droplets in a gas stream. The invention also relates to a method of modifying an existing wet-type gas scrubber (2) by including the demister (1). The invention further relates to a wet-type gas scrubber (2) comprising the demister (1). The demister (1) is a separate integral unit adapted to be removably attachable between the liquid collecting tank (5) and the cyclonic droplet separation tower (6).

No. of Pages : 21 No. of Claims : 19

(12) PATENT APPLICATION PUBLICATION
(21) Application No.2704/KOLNP/2014 A
(19) INDIA
(22) Date of filing of Application :25/11/2014
(43) Publication Date : 08/05/2015

(54) Title of the invention : METHODS FOR PREVENTING BIOFILM FORMATION

(51) International classification :C07K16/12
(31) Priority Document No :61/643,650
(32) Priority Date :07/05/2012
(33) Name of priority country :U.S.A.
(86) International Application No :PCT/US2013/039724
Filing Date :06/05/2013
(87) International Publication No :WO 2013/169657
(61) Patent of Addition to Application Number :NA
Filing Date :NA
(62) Divisional to Application Number :NA
Filing Date :NA

(71)**Name of Applicant :**
1)SANOFI
Address of Applicant :54 Rue La Boetie, F-75008 Paris France
(72)**Name of Inventor :**
1)REY, Astrid
2)LEFORT, Sylvie
3)FRAISSE, Laurent
4)YETHON, Jeremy

(57) Abstract :
Provided are methods for the treatment or prevention of microbial infections (e.g., nocosomial infection) in which the underlying pathology involves a PNAG-containing microbial bio film. The methods the invention generally involve administering to the subject an effective amount of an antibody that specifically binds to PNAG and disrupt or inhibit formation of PNAG-containing microbial bio films. Such methods are particularly useful for the treatment of nosocomial staphylococcus (e.g., S.epidermidis and S. aureus) infections.

No. of Pages : 35 No. of Claims : 41

(12) PATENT APPLICATION PUBLICATION
(19) INDIA
(22) Date of filing of Application :04/12/2014
(21) Application No.2811/KOLNP/2014 A
(43) Publication Date : 08/05/2015

(54) Title of the invention : COMBINED HYDROTHERMAL LIQUEFACTION AND CATALYTIC HYDROTHERMAL GASIFICATION SYSTEM AND PROCESS FOR CONVERSION OF BIOMASS FEEDSTOCKS

(51) International classification :C10L3/08,C10L9/08,C10B53/02
(31) Priority Document No :61/657,416
(32) Priority Date :08/06/2012
(33) Name of priority country :U.S.A.
(86) International Application No :PCT/US2013/041214
Filing Date :15/05/2013
(87) International Publication No :WO 2013/184317
(61) Patent of Addition to Application Number :NA
Filing Date :NA
(62) Divisional to Application Number :NA
Filing Date :NA

(71)**Name of Applicant :**
1)BATTELLE MEMORIAL INSTITUTE
Address of Applicant :P.O. Box 999, K1-53, Richland, Washington 99352 UNITED STATES OF AMERICA
(72)**Name of Inventor :**
1)ELLIOTT, Douglas C.
2)NEUENSCHWANGER, Gary D.
3)HART, Todd R.

(57) Abstract :
A combined hydrothermal liquefaction (HTL) and catalytic hydrothermal gasification (CHG) system and process are described that convert various biomass containing sources into separable bio oils and aqueous effluents that contain residual organics. Bio-oils may be converted to useful bio-based fuels and other chemical feedstocks. Residual organics in HTL aqueous effluents may be gasified and converted into medium-BTU product gases and directly used for process heating or to provide energy.

No. of Pages : 36 No. of Claims : 19

(12) PATENT APPLICATION PUBLICATION
(19) INDIA
(22) Date of filing of Application :12/12/2014
(21) Application No.2917/KOLNP/2014 A
(43) Publication Date : 08/05/2015

(54) Title of the invention : SYSTEMS AND METHODS FOR PROVIDING TIMELY ADVERTISING TO PORTABLE DEVICES

(51) International classification :G06Q30/02
(31) Priority Document No :61/646,768
(32) Priority Date :14/05/2012
(33) Name of priority country :U.S.A.
(86) International Application No :PCT/US2013/041025
Filing Date :14/05/2013
(87) International Publication No :WO 2013/173390
(61) Patent of Addition to Application Number :NA
Filing Date :NA
(62) Divisional to Application Number :NA
Filing Date :NA

(71)**Name of Applicant :**
1)FEADLER, Matthew Aaron
Address of Applicant :1608 E. Angela Dr., Phoenix, Arizona 85022 UNITED STATES OF AMERICA
2)WOLFINGER, James Alex
3)WAGNER, Sean Robert
(72)**Name of Inventor :**
1)FEADLER, Matthew Aaron
2)WOLFINGER, James Alex
3)WAGNER, Sean Robert

(57) Abstract :
Systems and methods for displaying advertisements on a portable device that utilizes an Activity-based operating system are described. The method includes receiving an indication that an Activity is being transitioned away from, and determining whether or not the Activity is finishing. Upon determining that the Activity is finishing, the method includes causing an advertisement display routine to be executed immediately, otherwise submitting the advertisement display routine into a processing queue to be executed subsequently. The advertisement display routine displays the advertisement only upon determining that the state of the Activity and the state of the portable device are characterized by one or more predetermined conditions.

No. of Pages : 48 No. of Claims : 30

(12) PATENT APPLICATION PUBLICATION
(19) INDIA
(22) Date of filing of Application :23/12/2014
(21) Application No.3026/KOLNP/2014 A
(43) Publication Date : 08/05/2015

(54) Title of the invention : FLAME-RETARDANT PRODUCT AND USE THEREOF

(51) International classification :C04B35/043,C04B35/565,C04B35/622
(31) Priority Document No :10 2012 015 026.1
(32) Priority Date :27/07/2012
(33) Name of priority country :Germany
(86) International Application No :PCT/EP2013/060572
Filing Date :23/05/2013
(87) International Publication No :WO 2014/016010
(61) Patent of Addition to Application Number :NA
Filing Date :NA
(62) Divisional to Application Number :NA
Filing Date :NA

(71)**Name of Applicant :**
1)REFRATECHNIK HOLDING GMBH
Address of Applicant :Adalperostraße 82, 85737 Ismaning GERMANY
(72)**Name of Inventor :**
1)JANSEN, Helge

(57) Abstract :
The invention relates to a flame-retardant batch and the use thereof, primarily containing - at least 30% by weight of a coarse-grain olivine raw material with a forsterite content of, e.g. at least 70% by weight and having grain sizes of, e.g. 100% by weight over 0.1 mm, - at least 35% by weight in magnesia in meal form with grain sizes of, e.g. 100% by weight.

No. of Pages : 32 No. of Claims : 16

(12) PATENT APPLICATION PUBLICATION
(19) INDIA
(22) Date of filing of Application :23/12/2014
(21) Application No.3027/KOLNP/2014 A
(43) Publication Date : 08/05/2015

(54) Title of the invention : SECURITY STRUCTURE

(51) International classification	:B42D15/00,B42D 15/10
(31) Priority Document No	:12 56869
(32) Priority Date	:16/07/2012
(33) Name of priority country	: France
(86) International Application No	:PCT/IB2013/055765
Filing Date	:12/07/2013
(87) International Publication No	:WO 2014/013410
(61) Patent of Addition to Application Number	:NA
Filing Date	:NA
(62) Divisional to Application Number	:NA
Filing Date	:NA

(71)**Name of Applicant :**
1)ARJOWIGGINS SECURITY
Address of Applicant :32 avenue Pierre Grenier, F-92100 Boulogne Billancourt France
(72)**Name of Inventor :**
1)DIETEMANN, Philippe

(57) Abstract :
The present invention relates to a security structure (20), comprising: a non-opaque, preferably transparent, substrate (21); the substrate (21) supporting metal elements forming a revealing pattern (20), the metal being thin enough for the metal to be non-opaque; and a lacquer placed at least partially, preferably exactly, on top of the metal elements, preferably in contact with the latter.

No. of Pages : 27 No. of Claims : 20

(12) PATENT APPLICATION PUBLICATION
(19) INDIA
(22) Date of filing of Application :18/12/2014
(21) Application No.2972/KOLNP/2014 A
(43) Publication Date : 08/05/2015

(54) Title of the invention : METHOD AND APPARATUS FOR DIVERTING CALLERS TO WEB SESSIONS

(51) International classification :G06Q 10/00
(31) Priority Document No :61/662,492
(32) Priority Date :21/06/2012
(33) Name of priority country :U.S.A.
(86) International Application No :PCT/US2013/047114
Filing Date :21/06/2013
(87) International Publication No :WO 2013/192551
(61) Patent of Addition to Application Number :NA
Filing Date :NA
(62) Divisional to Application Number :NA
Filing Date :NA

(71)**Name of Applicant :**
1)24/7 CUSTOMER,INC
Address of Applicant :910 E.HAMILTON AVE.STE.240,CAMPBELL,CA 95008-0610 UNITED STATES OF AMERICA
(72)**Name of Inventor :**
1)NGUYEN,PATRICK
2)CHANG,ANDREW
3)KADUDAS, VEDAVYAS
4)OSHRY,MATTHEW
5)BODELL, MICHAEL
6)LI, JAMES, MING
7)BANDHAUER, JOHN, PHILIP

(57) Abstract :
A customer support system diverts a customer to an integrated support service to serve the customer better in situations where the use of a single mode of interaction is insufficient. Embodiments of the invention find use where an email or SMS is sent to a customers smart devices with a link to visual content which helps customer better understand the information.

No. of Pages : 47 No. of Claims : 27

AMENDMENT UNDER SEC. 57

(1)

An application for change in the name of the Patentee from ALSTOM POWER BOILER GMBH to ALSTOM POWER SYSTEMS GMBH in respect of Patent No. 238298 (1213/Kolnp/2005) was filed. Any person interested may at any time within three months from the date of this publication give notice on Form-14, if any, to the Controller of Patents, at the appropriate office.

(2)

An application for change in the name of the Patentee from ALSTOM POWER BOILER GMBH to ALSTOM POWER SYSTEMS GMBH in respect of Patent No. 239870 (472/CAL/2001) was filed. Any person interested may at any time within three months from the date of this publication give notice on Form-14, if any, to the Controller of Patents, at the appropriate office.

PUBLICATION U/S.60 IN RESPECT OF APPLICATION FOR RESTORATION OF PATENTS (KOLKATA)

Notice is hereby given that application for restoration of under mentioned Patent has been allowed and said patent is restored.

Sl. No.	Application no.	Patent no.	Applicants	Title	Date of Publication u/r. 84(3)	Appro-priate Office
1.	3210/KOLNP/2008	256599	GLAXO GROUP LIMITED (U.K.)	A PROCESS FOR PREPARING THE FORM 1 SUCCINATE SALT OF BIPHENY-2-YLCARBAMIC ACID 1-[2-(2-CHLORO-4-{[(R)-2-(8-HYDROXY-2-(8-HYDROXY-2-OXO-1,2-DIHYDROQUINOLIN-5-YL)ETHYLAMINO]METHYL}-5-METHOXYPHENYLCARBOMOYL)ETHYL] PIPERIDIN-4-YL ESTER	12/12/2014	KOLKATA

Publication Under Section 43(2) in Respect of the Grant

Following Patents have been granted and any person interested in opposing these patents under Section 25(2) may at any time within one year from the date of this issue, give notice to the Controller of Patents at the appropriate office, on the prescribed form-7 along with written statement and evidence, if any.

Serial Number	Patent Number	Application Number	Date of Application	Date of Priority	Title of Invention	Name of Patentee	Date of Publication of Abstract u/s 11(A)	Appropriate Office
1	266365	5130/DELNP/2007	12/01/2006	12/01/2005	PRESSURE SWING ADSORPTION PROCESS AND SYSTEM	LUMMUS TECHNOLOGY INC.	17/08/2007	DELHI
2	266377	1029/DEL/2005	26/04/2005	28/04/2004	A CONNECTOR WITH A RECEPTACLE	SUMITOMO WIRING SYSTEMS, LTD.	24/08/2007	DELHI
3	266384	2004/DEL/2004	14/10/2004	16/10/2003	A DEVICE FOR ATTACHING A MOVING BLADE TO A TURBINE ROTOR DISK IN A TURBOMACHINE	SNECMA	22/09/2006	DELHI
4	266386	7995/DELNP/2007	14/04/2006	20/04/2005	HOT DIP GALVANNEALED STEEL SHEET AND METHOD OF PRODUCTION OF THE SAME	NIPPON STEEL & SUMITOMO METAL CORPORATION	04/07/2008	DELHI
5	266387	2355/DEL/2005	02/09/2005	21/09/2004	A FILTRATION DEVICE	EMD MILLIPORE CORPORATION	31/07/2009	DELHI
6	266394	598/DELNP/2004	18/09/2002	20/09/2001	A TURBOMACHINE INCLUDING A NOZZLE INTERPOSED AXIALLY BETWEEN TWO STRUCTURAL ELEMENTS	SNECMA	30/10/2009	DELHI
7	266395	2055/DELNP/2007	26/09/2005	28/09/2004	A POLYURETHANE COMPOSITE, ITS PRODUCING PROCESS AND THE USAGE THEREOF	BAYER MATERIALSCIENCE AG	17/08/2007	DELHI
8	266397	2621/DEL/2007	14/12/2007	18/12/2006	A TERMINAL FITTING, A METHOD FOR FORMING A TERMINAL FITTING AND CONNECTOR	SUMITOMO WIRING SYSTEMS LTD.	01/08/2008	DELHI
9	266398	3557/DELNP/2007	08/11/2005	12/11/2004	APPLIANCE AND METHOD FOR PREPARING A FROTH FROM A FOOD LIQUID	NESTEC S.A	31/08/2007	DELHI
10	266399	3061/DELNP/2008	12/10/2006	25/10/2005	HALOGEN-FREE FLAME-RETARDANT THERMOPLASTIC POLYESTER	LANXESS DEUTSCHLAND GMBH	27/06/2008	DELHI
11	266401	3139/DELNP/2007	18/11/2005	19/11/2004	A METHOD FOR FORMING A COATING FILM	KANSAI PAINT CO., LTD.	31/08/2007	DELHI
12	266403	198/DELNP/2003	28/05/2002	05/06/2001	DISTRIBUTOR OF LIQUID OR CREAMY CONSTITUENTS FOR GARNISHING FOOD	ARTOS S.A	04/12/2009	DELHI

13	266409	5531/DELNP/2010	23/06/2009	27/06/2008	IMPROVED SEPARATION PROCESS FOR OLEFIN PRODUCTION	LUMMUS TECHNOLOGY INC.	18/11/2011	DELHI
14	266412	2734/DELNP/2007	17/11/2005	26/11/2004	AN ELECTRODE CONNECTOR	LG CHEM, LTD.	03/08/2007	DELHI
15	266413	6611/DELNP/2006	07/04/2005	09/04/2004	ENZYMATIC PRODUCTION OF HYDROLYZED LECITHIN PRODUCTS	CARGILL, INCORPORATED	31/08/2007	DELHI
16	266417	3868/DELNP/2007	03/07/2003	03/07/2002	SPACER AND MUNTIN ELEMENTS FOR INSULATING GLAZING UNITS	QUANEX IG SYSTEMS, INC.	31/08/2007	DELHI
17	266418	1673/DELNP/2006	12/10/2004	04/11/2003	A MOLD APPARATUS AND METHOD FOR MOLDING A COMPONENT ONTO A STRETCHED BLANK	ILLINOIS TOOL WORKS INC.	10/08/2007	DELHI
18	266423	5042/DELNP/2006	23/03/2005	23/03/2004	A BENZOPYRANE DERIVATIVE OF FORMULA(I) OR (II) OR PHARMACEUTICAL ACCEPTABLE SALT	NISSAN CHEMICAL INDUSTRIES LTD.	10/08/2007	DELHI
19	266438	856/DEL/2006	28/03/2006 15:23:56		A MICROWAVE INDUCED PORCESS FOR THE PREPARATION OF SUBSTITUTED STILABENES AND ITS ANALOGS	COUNCIL OF SCIENTIFIC & INDUSTRIAL RESEARCH	20/09/2013	DELHI
20	266462	1564/DELNP/2007	30/08/2005	02/09/2004	METHOD OF FORMING A CONVERSION OR PASSIVATION COATING ON A METAL SURFACE WITH AQUEOUS CHROMATE FREE TREATMENT AND COMPOSITION THEREOF	GENERAL ELECTRIC COMPANY	03/08/2007	DELHI

Publication Under Section 43(2) in Respect of the Grant

Following Patents have been granted and any person interested in opposing these patents under Section 25(2) may at any time within one year from the date of this issue, give notice to the Controller of Patents at the appropriate office, on the prescribed form-7 along with written statement and evidence, if any.

Serial Number	Patent Number	Application Number	Date of Application	Date of Priority	Title of Invention	Name of Patentee	Date of Publication of Abstract u/s 11(A)	Appropriate Office
1	266369	1057/MUMNP/2007	03/11/2005	01/02/2005	DEVICE FOR PROCESSING A CONSUMABLE IN THE FORM OF A VISCOUS TO PASTY MASS	BUHLER AG	24/08/2007	MUMBAI
2	266380	378/MUM/2007	27/02/2007		HIGH ENERGY ABSORBING GLASS FIBRE COMPOSITES FOR AUTOMOTIVE APPLICATIONS	MAHINDRA & MAHINDRA LTD.	24/10/2008	MUMBAI
3	266381	590/MUM/2007	29/03/2007		IMPROVED LOWER BODY STRUCTURE FOR A VEHICLE	TATA MOTORS LIMITED	05/09/2008	MUMBAI
4	266382	219/MUM/2008	31/01/2008		A THERMAL STORAGE SYSTEM	SURENDRA HIMATLAL SHAH	15/02/2008	MUMBAI
5	266391	2370/MUMNP/2008	18/04/2007	18/04/2006	WAVEFORM ENCODING FOR WIRELESS APPLICATIONS	QUALCOMM INCORPORATED	16/01/2009	MUMBAI
6	266393	706/MUM/2008	31/03/2008		A FIXTURE FOR STEERING TORQUE EFFORT MEASUREMENT	TATA MOTORS LIMITED	16/05/2008	MUMBAI
7	266402	37/MUM/2006	10/01/2006		SPINNING-MILL PREPARING MACHINE WITH A CONTROL APPARATUS	RIETER INGOLSTADT GMBH	24/08/2007	MUMBAI
8	266406	1155/MUMNP/2008	15/01/2007	15/01/2006	SYSTEM AND METHOD FOR PUSHING SERVICE UTILIZING INSTANT MESSAGING	TENCENT TECHNOLOGY (SHENZHEN) COMPANY LIMITED	19/09/2008	MUMBAI
9	266411	2314/MUM/2008	27/10/2008		HOSPITAL BED WITH SLIDING BACK ARRANGEMENT	BHASKAR VITTHAL PATWARDHAN	14/11/2008	MUMBAI
10	266430	2206/MUMNP/2008	25/10/2006	31/03/2006	A FASTENING DEVICE FOR MOUNTING A HAND HELD APPLICATOR	OU KRIMELTE	27/02/2009	MUMBAI
11	266436	1327/MUMNP/2008	12/12/2006	12/12/2005	A METHOD OPERATIONAL ON A TOKEN DEVICE FOR REPLACING CRYPTOGRAPHIC KEYS AND A DEVICE THEREOF	QUALCOMM INCORPORATED	31/10/2008	MUMBAI
12	266440	836/MUMNP/2007	08/12/2004	08/12/2004	SYSTEM FOR DIAGNOSIS OF BRAINSTEM DISORDERS	SENSODETECT AKTIEBOLAG	27/07/2007	MUMBAI
13	266445	1160/MUM/2005	21/09/2005	27/09/2004	METHOD AND SYSTEM FOR REDUCING POWER CONSUMPTION IN A DISPLAY	QUALCOMM MEMS TECHNOLOGIES,INC.	24/08/2007	MUMBAI

14	266455	1242/MUMNP/2010	08/10/2008	15/11/2007	RESIN COMPOSITION AND RESIN MOLDED ARTICLE.	ADEKA CORPORATION	22/10/2010	MUMBAI
15	266458	1964/MUMNP/2010	16/02/2009	29/02/2008	WOODY SYNTHETIC RESIN COMPOSITION HAVING IMPROVED WEATHER RESISTANCE AND MOLDED BODY THEREOF	ADEKA CORPORATION	21/01/2011	MUMBAI
16	266461	2170/MUMNP/2008	24/04/2007	25/04/2006	FUEL CELLS	ACAL ENERGY LIMITED	09/01/2009	MUMBAI

Publication Under Section 43(2) in Respect of the Grant

Following Patents have been granted and any person interested in opposing these patents under Section 25(2) may at any time within one year from the date of this issue, give notice to the Controller of Patents at the appropriate office, on the prescribed form-7 along with written statement and evidence, if any.

Serial Number	Patent Number	Application Number	Date of Application	Date of Priority	Title of Invention	Name of Patentee	Date of Publication of Abstract u/s 11(A)	Appropriate Office
1	266367	3171/CHE/2008	17/12/2008	17/12/2007	CONNECTION HEAD STRUCTURE OF HIGH PRESSURE FUEL INJECTION TUBE	USUI KOKUSAI SANGYO KAISHA LIMITED	21/08/2009	CHENNAI
2	266371	170/CHENP/2008	10/07/2006	12/07/2005	SPLICE BAR FOR CONNECTING CABLE TRAY SECTIONS	I.C.M. GROUP	19/09/2008	CHENNAI
3	266372	1001/CHE/2005	25/07/2005		AN ELECTRO-MECHANICAL SYSTEM FOR NON-DUPLICATION OF VIDEO FILES	TRINITY FUTURE-IN PRIVATE LIMITED	21/09/2007	CHENNAI
4	266373	5319/CHENP/2008	01/03/2007	03/03/2006	A DEVICE FOR BRAKING THE MOVEMENT OF A DOOR, DRAWER OR SIMILAR MOVABLE MEMBER	CULTRARO, ANTONINO	20/03/2009	CHENNAI
5	266374	298/CHE/2009	11/02/2009 17:09:50	14/02/2008	A METHOD OF MANAGING THE POWER SUPPLY TO A NON-REVERSIBLE ACTUATOR FOR A VEHICLE WHEEL BRAKE	MESSIER-BUGATTI-DOWTY	11/09/2009	CHENNAI
6	266375	204/CHENP/2007	23/06/2005	22/07/2004	AN ELONGATED STOPPER DEVICE	REFRACTORY INTELLECTUAL PROPERTY GMBH & CO. KG	24/08/2007	CHENNAI
7	266383	1796/CHENP/2008	20/10/2006	24/10/2005	METHODS OF FILTERING A LIQUID STREAM PRODUCED FROM AN IN SITU HEAT TREATMENT PROCESS	SHELL INTERNATIONALE RESEARCH MAATSCHAPPIJ B.V.	26/12/2008	CHENNAI
8	266388	4489/CHENP/2007	11/04/2006	11/04/2005	ADENOVIRUS PURIFICATION USING ULTRAFILTRATION	CRUCELL HOLLAND B.V.	25/01/2008	CHENNAI
9	266389	3006/CHENP/2007	07/12/2005	07/12/2004	METHOD AND SYSTEM FOR PRODUCING METALLIC IRON NUGGETS	NU-IRON TECHNOLOGY, LLC	07/09/2007	CHENNAI
10	266390	90/CHE/2009	12/01/2009 16:51:22		METHOD AND SYSTEM FOR FACILITATING AUTOMATED NAVIGATION IN A HEATHCARE ENVIRONMENT	GENERAL ELECTRIC COMPANY	23/07/2010	CHENNAI

11	266392	3146/CHENP/2007	16/01/2006	17/01/2005	A METHOD FOR QUENCHING A STEEL LOAD	ETUDES ET CONSTRUCTIONS MECANIQUES	07/09/2007	CHENNAI
12	266396	1211/CHE/2007	12/06/2007 12:03:49		MAGNETIC FUEL SAVER	V.CHANDRAKANTHAN	26/12/2008	CHENNAI
13	266400	2315/CHENP/2006	26/11/2003	26/11/2003	NECK BRACE	XCEED HOLDINGS (PTY) LTD.	06/07/2007	CHENNAI
14	266407	4098/CHENP/2007	03/02/2006	18/02/2005	SHAFT FOR SAMPLING PIPETTE, AND PIPETTE THUS FITTED	GILSON S.A.S.	16/11/2007	CHENNAI
15	266414	4988/CHENP/2007	02/05/2006	04/05/2005	SCHEDULING OF UPLINK DATA TRANSMISSION USING DIFFERENT UE-IDS	KONINKLIJKE PHILIPS ELECTRONICS N.V.	27/06/2008	CHENNAI
16	266415	2127/CHENP/2008	31/10/2006	31/10/2005	METHOD OF OPERATING A FUEL CELL STACK TO PREVENT MECHANICAL FAILURE OF FUEL CELL MEMBRANES AND A POLYELECTROLYTE MEMBRANE	GM GLOBAL TECHNOLOGY OPERATIONS, INC	06/03/2009	CHENNAI
17	266416	5768/CHENP/2007	07/06/2006	15/06/2005	CATIONIC OLIGOMERIC AZO DYES	CIBA HOLDING INC	27/06/2008	CHENNAI
18	266424	2748/CHENP/2004	05/06/2003	07/06/2002	APPARATUS AND AN ASSOCIATED METHOD, FOR FACILITATING COMMUNICATIONS IN A RADIO COMMUNICATION SYSTEM THAT PROVIDES FOR DATA COMMUNICATIONS AT MULTIPLE DATA RATES	NOKIA CORPORATION	10/02/2006	CHENNAI
19	266425	3416/CHENP/2007	30/01/2006	03/02/2005	AUDIO DEVICE FOR IMPROVED SOUND REPRODUCTION	KONINKLIJKE PHILIPS ELECTRONICS N.V	16/11/2007	CHENNAI
20	266426	214/CHE/2009	30/01/2009 10:55:20		REMOTE OPERATING MOVABLE FIRE EXTINGUISHER	P. JAYAKUMAR	26/09/2014	CHENNAI
21	266427	4127/CHENP/2007	21/04/2006	22/04/2005	IN SITU CONVERSION PROCESS SYSTEMS UTILIZING WELLBORES IN AT LEAST TWO REGIONS OF A FORMATION	SHELL INTERNATIONALE RESEARCH MAATSCHPPIJ B.V.	16/11/2007	CHENNAI

22	266428	26/CHENP/2008	26/06/2006	04/07/2005	DISAZO DYES AND DYE COMPOSITIONS FOR SHADING WHITE PAPER	CIBA HOLDING INC	28/11/2008	CHENNAI
23	266429	5226/CHENP/2008	29/03/2007	31/03/2006	METHODS FOR PRODUCING CARBOXYLIC ACID CHLORIDE COMPOUNDS	AJINOMOTO CO., INC.	20/03/2009	CHENNAI
24	266432	1888/CHE/2005	23/12/2005		METHOD OF CANCELING A PAGE FROM PRINTING IN A MULTI PAGE PRINT JOB AT A MULTI FUNCTIONAL PERIPHERAL	SAMSUNG R&D INSTITUTE INDIA-BANGALORE PRIVATE LIMITED	21/09/2007	CHENNAI
25	266437	1180/CHENP/2009	31/07/2007	01/08/2006	TRAILING ARM FOR A MOTOR-VEHICLE REAR INDEPENDENT SUSPENSION	SISTEMI SOSPENSIONI S.p.A.	29/05/2009	CHENNAI
26	266439	3912/CHENP/2007	10/03/2006	10/03/2005	RADIO RECEIVER APPARATUS AND RADIO TRANSMITTER APPARATUS	PANASONIC INTELLECTUAL PROPERTY CORPORATION OF AMERICA	21/12/2007	CHENNAI
27	266441	3558/CHENP/2007	30/01/2006	14/02/2005	AN ELECTRONIC DEVICE AND A METHOD FOR SELECTING MUSIC SONGS	KONINKLIJKE PHILIPS ELECTRONICS N.V	16/11/2007	CHENNAI
28	266442	6948/CHENP/2008	10/07/2007	11/07/2006	AN APPARATUS FOR FREQUENCY CONVERSION AND A METHOD THEREOF	QUALCOMM INCORPORATED	27/03/2009	CHENNAI
29	266444	3112/CHENP/2007	13/10/2005	15/12/2004	PROCESS FOR MACHINING A WORK PIECE	ROBERT BOSCH GMBH	28/11/2008	CHENNAI
30	266448	291/CHE/2008	01/02/2008		TOOTH POINT ASSEMBLY FOR WALKING DRAGLINE BUCKETS	M/s. BEML LIMITED	11/09/2009	CHENNAI
31	266451	5031/CHENP/2007	15/03/2006	07/04/2005	TELESCOPIC GUIDE FOR A FURNITURE PART THAT CAN BE DISPLACED IN THE CABINET OF A PIECE OF FURNITURE	PAUL HETTICH GmbH & CO., KG	21/03/2008	CHENNAI
32	266452	4453/CHENP/2009	28/12/2007	28/12/2006	COMPOSITE OF METAL AND RESIN AND METHOD FOR MANUFACTURING THE SAME	TAISEI PLAS CO., LTD.	18/09/2009	CHENNAI
33	266453	4985/CHENP/2009	13/12/2007	02/02/2007	POSITIONING DEVICE FOR A ROD-SHAPED MEASURING APPARATUS	SMS Siemag Aktiengesellschaft	06/11/2009	CHENNAI
34	266454	3883/CHENP/2007	24/02/2006	07/03/2005	INDUCTIVE ANGULAR POSITION SENSOR	SAPPEL	21/12/2007	CHENNAI

35	266459	1128/CHENP/2007	18/08/2005	18/08/2004	A SEAL ASSEMBLY	FEDERAL-MOGUL CORPORATION	17/08/2007	CHENNAI
36	266460	2189/CHE/2006	27/11/2006 14:14:17		MOUNTING ARRANGEMENT OF NUMBER PLATE IN A MOTORCYCLE	BAJAJ AUTO LIMITED	28/11/2008	CHENNAI
37	266463	537/CHENP/2009	24/05/2007	20/06/2006	AN ON BOARD CONNECTOR TO BE MOUNTED TO A CIRCUIT BOARD	SHARP KABUSHIKI KAISHA,JAPAN AVIATION ELECTRONICS INDUSTRY, LIMITED	05/06/2009	CHENNAI
38	266465	1131/CHENP/2006	04/10/2004	03/10/2003	PDK-1/AKT SIGNALING INHIBITORS	THE OHIO STATE UNIVERSITY RESEARCH FOUNDATION	31/08/2007	CHENNAI
39	266467	2336/CHENP/2008	18/10/2006	19/10/2005	CHEMICAL FORMULATION SUPPLY UNIT FOR A VAPOUR EMANATING DEVICE	RECKITT BENCKISER (AUSTRALIA) PTY LIMITED	06/03/2009	CHENNAI

Publication Under Section 43(2) in Respect of the Grant

Following Patents have been granted and any person interested in opposing these patents under Section 25(2) may at any time within one year from the date of this issue, give notice to the Controller of Patents at the appropriate office, on the prescribed form-7 along with written statement and evidence, if any.

Serial Number	Patent Number	Application Number	Date of Application	Date of Priority	Title of Invention	Name of Patentee	Date of Publication of Abstract u/s 11(A)	Appropriate Office
1	266362	454/KOLNP/2009	13/07/2007	26/07/2006	PROCESS FOR REDUCING RESIDUALS CONTENT IN VINYL AROMATIC POLYMERS	TOTAL PETROCHEMICALS FRANCE ,CENTRE NATIONAL DE LA RECHERCHE SCIENFTIFIQUE (CNRS)	15/05/2009	KOLKATA
2	266363	76/KOL/2007	22/01/2007		A SYSTEM FOR ALIGNING LADLE AND TUNDISH IN BLOOM CASTER	STEEL AUTHORITY OF INDIA LIMITED	29/08/2008	KOLKATA
3	266364	2968/KOLNP/2009	11/02/2008	22/02/2007	PROCESS FOR THE PREPARATION OF (2R,3S)-3-PHENYLISOSERINE METHYL ESTER ACETATE SALT	INDENA S.P.A.	06/11/2009	KOLKATA
4	266366	897/KOL/2007	20/06/2007	27/06/2006	BIOTECHNOLOGICAL PROCESS FOR THE TREATMENT OF AS-CONTAINING HYDROXIDE SLUDGE RESULTING FROM POTABLE WATER TREATMENT PROCESSES WHICH USE FECL3 AS A COAGULANT, THROUGH THE ACTION OF SULFATE REDUCING BACTERIA	UNIVERSIDAD CATOLICA DEL NORTE	11/01/2008	KOLKATA
5	266368	2621/KOLNP/2008	04/01/2007	04/01/2006	DERIVATIVES OF SULINDAC AND PREPARATION THEREOF	SOUTHERN RESEARCH INSTITUTE	23/01/2009	KOLKATA
6	266370	345/KOLNP/2009	01/08/2002	02/08/2001	A MOBILE STATION APPARATUS FOR RADIO COMMUNICATIONS WITH A BASE STATION APPARATUS	PANASONIC CORPORATION	08/05/2009	KOLKATA
7	266376	1383/KOLNP/2007	12/09/2006	13/09/2005	AN ARCHITECTURE OF AN INTERNAL COMBUSTION ENGINE WITH ASSOCIATED OIL PAN FOR REDUCING ENGINE NOISE	GM GLOBAL TECHNOLOGY OPERATIONS, INC	20/07/2007	KOLKATA

8	266378	194/KOL/2008	04/02/2008	14/02/2007	ELECTRO-HYDRAULIC CONTROL SYSTEM WITH THREE-POSITION DOG CLUTCH ACTUATOR VALVE	GM GLOBAL TECHNOLOGY OPERATIONS, INC	22/08/2008	KOLKATA
9	266379	5206/KOLNP/2008	18/06/2007	19/06/2006	TRICYCLIC COMPOUND AND PHARMACEUTICAL USE THEREOF	TAKEDA PHARMACEUTICAL COMPANY LIMITED	27/03/2009	KOLKATA
10	266385	653/KOL/2008	31/03/2008		DEVELOPMENT OF HYPOEUTECTOID GRAPHITIC STEEL WITH ENHANCED DRAWABILITY FOR WIRES	TATA STEEL LIMITED	09/10/2009	KOLKATA
11	266404	3673/KOLNP/2006	01/06/2005	04/06/2004	POWER SUPPLY APPARATUS	MIKUNI CORPORATION	15/06/2007	KOLKATA
12	266405	3674/KOLNP/2006	01/06/2005	04/06/2004	POWER SUPPLY APPARATUS.	MIKUNI CORPORATION	15/06/2007	KOLKATA
13	266408	2917/KOLNP/2007	24/01/2006	24/01/2005	SPECIFIC BINDING MEMBERS FOR NGF	MEDIMMUNE LIMITED,ELAN PHARMA INTERNATIONAL LIMITED	14/09/2007	KOLKATA
14	266410	3283/KOLNP/2006	22/04/2005	29/04/2004	A PROCESS FOR PRODUCING A STRUCTURE HAVING AN APPLICATION OF BONDING AGENT TO PRODUCE A STRUCTURE THAT IS ABLE TO WITHSTAND HIGH TEMPERATURES	EMITEC GESELLSCHAFT FUR EMISSIONSTECHNOLOGIE MBH	08/06/2007	KOLKATA
15	266419	1072/KOLNP/2009	15/09/2007	29/09/2006	VOLUME METER FOR FLOWING MEDIA, AND METHOD FOR VOLUME METERING OF FLOWING MEDIA	ELSTER MESSTECHNIK GMBH	22/05/2009	KOLKATA
16	266420	658/KOL/2007	30/04/2007	07/06/2006	METHOD AND APPARATUS FOR MANAGEMENT OF AN ELECTRIC ENERGY STORAGE DEVICE TO ACHIEVE A TARGET LIFE OBJECTIVE	GM GLOBAL TECHNOLOGY OPERATIONS, INC	28/12/2007	KOLKATA
17	266421	2316/KOLNP/2008	11/12/2006	21/12/2005	MOTOR AND COMPRESSOR	DAIKIN INDUSTRIES, LTD.	16/01/2009	KOLKATA
18	266422	1923/KOL/2008	03/11/2008 15:49:32	07/11/2007	ROTATING ELECTRIC MACHINE STATOR CORE AND METHOD OF MAKING	GM GLOBAL TECHNOLOGY OPERATIONS, INC.	05/06/2009	KOLKATA
19	266431	1638/KOLNP/2009	26/11/2007	28/11/2006	COMPOSITE SHEET AND ABSORBENT ARTICLE COMPRISING COMPOSITE SHEET	UNI-CHARM CORPORATION	29/05/2009	KOLKATA

20	266433	3794/KOLNP/2007	10/03/2006	11/03/2005	A SKIN DRESSINGS	INSENSE LIMITED	31/10/2008	KOLKATA
21	266434	1260/KOL/2008	23/07/2008		METHOD FOR FABRICATION OF PHOTOVOLTAIC MODULES OF RATING 12-VOLT, 80-WATT INCORPORATING 72 ONE-THIRD CUT 156-MM SIZE MULTI CRYSTALLINE SILICON SOLAR CELLS	BHARAT HEAVY ELECTRICALS LIMITED	29/01/2010	KOLKATA
22	266435	817/KOL/2006	16/08/2006	01/09/2005	MULTIPLEXED TRIM VALVE SYSTEM FOR AN ELECTRICALLY VARIABLE HYBRID TRANSMISSION	GM GLOBAL TECHNOLOGY OPERATIONS, INC.	29/06/2007	KOLKATA
23	266443	3557/KOLNP/2006	13/06/2005	18/06/2004	MULTI-POSITION FIBER OPTIC CONNECTOR HOLDER FOR STORING FIBER OPTIC CONNECTORS IN TELECOMMUNICATIONS CONNECTION CABINET AND CORRESPONDING METHOD	ADC TELECOMMUNICATIONS,INC	15/06/2007	KOLKATA
24	266446	42/KOL/2008	07/01/2008	25/01/2007	MULTI-SHAFT COUNTERSHAFT TRANSMISSION AND A METHOD OF REDUCING THE LENGTH AND WEIGHT OF A TRANSMISSION	GM GLOBAL TECHNOLOGY OPERATIONS, INC.	29/08/2008	KOLKATA
25	266447	1226/KOLNP/2007	02/11/2005	18/11/2004	MILLING CUTTING INSERT AND MILLING CUTTER	ISCAR LTD.	20/07/2007	KOLKATA
26	266449	5019/KOLNP/2008	20/02/2007	28/06/2006	A METHOD OF MANUFACTURING A DELIVERY SYSTEM	INTERCONTINENTAL GREAT BRANDS LLC	27/03/2009	KOLKATA
27	266450	3400/KOLNP/2006	09/05/2005	11/05/2004	GUM SLAB PACKAGE HAVING INSERTABLE PRODUCT RETENTION MEMBER	CADBURY ADAMS USA LLC	15/06/2007	KOLKATA
28	266456	767/KOL/2008	24/04/2008	30/04/2007	METHOD AND SYSTEM FOR COOLING A FLUID IN A TRANSMISSION	GM GLOBAL TECHNOLOGY OPERATIONS, INC.	05/06/2009	KOLKATA
29	266457	1093/KOL/2008	24/06/2008	27/07/2007	A SYSTEM AND A METHOD FOR DETERMINING THE VARIABLE CAM TIMING RATE-OF-CHANGE IN AN ENGINE	GM GLOBAL TECHNOLOGY OPERATIONS, INC.	24/04/2009	KOLKATA
30	266464	4772/KOLNP/2008	11/06/2007	12/06/2006	PHENYL PYRAZOLE DERIVATIVES AS NON-STEROIDAL GLUCOCORICOID RECEPTOR LIGANDS	GLAXO GROUP LIMITED	13/03/2009	KOLKATA

31	266466	294/CAL/2002	10/05/2002		A process for the preparation of Taxanes	DABUR PHARMA LIMITED	11/03/2005	KOLKATA
32	266468	894/KOLNP/2008	01/08/2006	01/08/2005	METHOD FOR ENANTIOSELECTIVE HYDROGENATION OF CHROMENES	GIRINDUS AMERICA, INC.,CHILDRENS HOSPITAL MEDICAL CENTER	19/12/2008	KOLKATA
33	266469	265/KOL/2006	27/03/2006		A ROLLING MILL DATA ACQUISITION AND ANALYSIS SYSTEM FOR EFFICIENT MILL PERFORMANCE	STEEL AUTHORITY OF INDIA LIMITED	10/04/2009	KOLKATA

CONTINUED TO PART- 3

CONTINUED FROM PART- 2

INTRODUCTION

In view of the recent amendment made in the Designs (Amendment) Rules, 2008 with effect from 17/06/2008, Publication of the matter relating to Designs is being published in the Official Journal of The Patent Office. This Journal is being published on weekly basis on every Friday covering the various proceedings on Designs as required according to the provisions of under Rule 22, 25, 27 and 39 of the Design (Amendment) Rules, 2008. All the enquiries on this Official Journal and other information as required by the public should be addressed to the Controller General of Patents, Designs & Trade Marks. Suggestions and comments are requested from all quarters so that the content can be enriched.

THE DESIGNS ACT 2000
(SECTION 30)
DESIGN ASSIGNMENT

The Design stands in the name of ALOYS WOBBEN registered under the Designs Act, 2000 has been assigned in the Register of Designs in the name as follows:-

Design No.	Class	Name
239906	13-02	WOBBEN PROPERTIES GMBH, A CORPORATION ORGANIZED AND EXISTING UNDER THE LAWS OF GERMANY, OF DREEKAMP 5, 26605 AURICH, GERMANY

COPYRIGHT PUBLICATION

SL NO	REGISTERED DESIGN NUMBERS	RENEWED ON
1.	198742	07.04.2015
2.	198743	07.04.2015
3.	198744	07.04.2015
4.	198745	07.04.2015
5.	198746	07.04.2015
6.	198747	07.04.2015
7.	198748	07.04.2015
8.	198749	07.04.2015
9.	198750	07.04.2015
10.	198751	07.04.2015

REGISTRATION OF DESIGNS

The following designs have been registered. They are now open for public inspection. In the following each entry the Date of Registration is shown. The Priority Number, Priority Date and Priority Country are also shown

DESIGN NUMBER	265395
CLASS	24-02
1)HTL-STREFA SPÓLKA AKCYJNA, ADAMÓWEK 7, PL 95-035 OZORKÓW., POLAND, NATIONALITY-POLAND	
DATE OF REGISTRATION	04/09/2014
TITLE	SAFETY NEEDLE DEVICE

PRIORITY

PRIORITY NUMBER	DATE	COUNTRY
002493460-0001	30/06/2014	OHIM

DESIGN NUMBER	266088
CLASS	12-11
1)HONDA MOTOR CO., LTD., A JAPANESE CORPORATION, OF 1-1, MINAMI-AOYAMA 2-CHOME, MINATO-KU, TOKYO, JAPAN	
DATE OF REGISTRATION	29/09/2014
TITLE	SIDE COVER FOR MOTORCYCLE

PRIORITY

PRIORITY NUMBER	DATE	COUNTRY
2014-006998	31/03/2014	JAPAN

DESIGN NUMBER	267196
CLASS	07-04
1)MR. MIKDAR NISARALI RATLAMWALA AND MR. AMMAR MIKDAR RATLAMWALA AN INDIAN INHABITANTS TRADING AS M/S. BOMBAY TEA STRAINERS MANUFACTURING, A PARTNERSHIP FIRM HAVING OUR OFFICE AT 17-B LAST LANE, SITAFAL WADI, MAZGAON, MUMBAI-400010, MAHARASHTRA, INDIA	
DATE OF REGISTRATION	03/11/2014
TITLE	TEA STRAINER
PRIORITY NA	

DESIGN NUMBER	264374
CLASS	30-03
1)UDIT AGARWAL, AN INDIAN CITIZEN, C/O GANGA SANITARY STORE, STATION ROAD, MORADABAD-244001, UP, INDIA	
DATE OF REGISTRATION	30/07/2014
TITLE	RACK FOR FEEDING ANIMALS
PRIORITY NA	

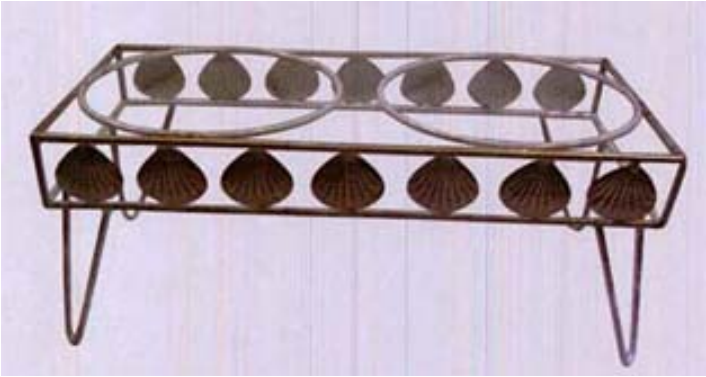

DESIGN NUMBER	266104
CLASS	06-01
1)A3NP INDÚSTRIA E COMÉRCIO DE MÓVEIS S/A, A BRAZILIAN COMPANY OF RUA IGUATEMI, 192, CONJUNTO 174 B, ITAIM BIBI, SÃO PAULO-SP, ZIP CODE: 01451-010 BRAZIL	
DATE OF REGISTRATION	29/09/2014
TITLE	CHAIR

PRIORITY

PRIORITY NUMBER	DATE	COUNTRY
BR302014001495-1	04/04/2014	BRAZIL

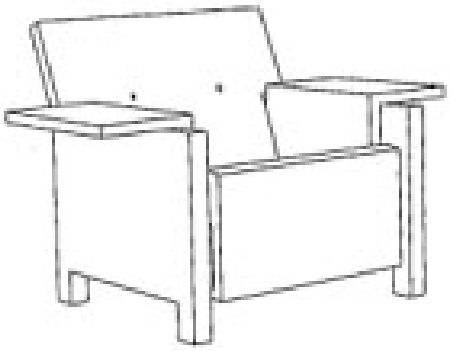

DESIGN NUMBER	264666
CLASS	07-01
1)DART INDUSTRIES INC., A COMPANY INCORPORATED UNDER THE LAWS OF THE U.S.A. HAVING ITS REGISTERED OFFICE AT 14901 S. ORANGE BLOSSOM TRAIL ORLANDO, FLORIDA 32837, U.S.A.	
DATE OF REGISTRATION	11/08/2014
TITLE	PITCHER WITH HANDLE

PRIORITY

PRIORITY NUMBER	DATE	COUNTRY
29/485,266	18/03/2014	U.S.A.

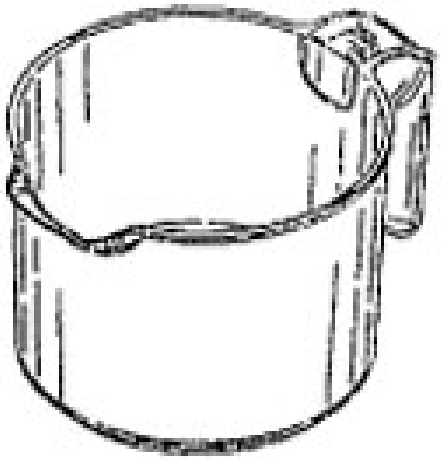

DESIGN NUMBER	264155
CLASS	15-04
1)KOBELCO CONSTRUCTION MACHINERY CO. LTD., A JAPANESE CORPORATION OF 2-1, ITSUKAICHIKOU 2-CHOME, SAEKI-KU, HIROSHIMA-SHI, HIROSHIMA, JAPAN	
DATE OF REGISTRATION	18/07/2014
TITLE	POWER SHOVEL

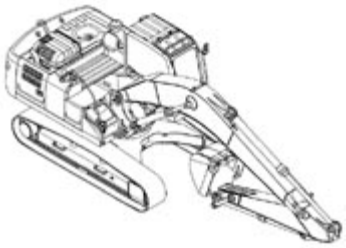

PRIORITY

PRIORITY NUMBER	DATE	COUNTRY
2014-001291	24/01/2014	JAPAN

DESIGN NUMBER	265170
CLASS	03-01
1)MR. MAHESH S. SHETHIA, SOLE PROPERITOR OF KRUPA INDUSTRIES-AN INDIAN COMPANY, 228-B, BOMBAY TALKIES COMPOUND, MALAD (WEST), MUMBAI-400064, MAHARASHTRA, INDIA	
DATE OF REGISTRATION	27/08/2014
TITLE	MONEY BOX
PRIORITY NA	

DESIGN NUMBER	265396
CLASS	24-02
1)HTL-STREFA SPÓLKA AKCYJNA, ADAMÓWEK 7, PL 95-035 OZORKÓW., POLAND, NATIONALITY-POLAND	
DATE OF REGISTRATION	04/09/2014
TITLE	SAFETY NEEDLE DEVICE

PRIORITY

PRIORITY NUMBER	DATE	COUNTRY
002493460-0002	30/06/2014	OHIM

DESIGN NUMBER	266102
CLASS	06-01

1)A3NP INDÚSTRIA E COMÉRCIO DE MÓVEIS S/A, A BRAZILIAN COMPANY OF
RUA IGUATEMI, 192, CONJUNTO 174 B, ITAIM BIBI, SÃO PAULO-SP, ZIP CODE: 01451-010 BRAZIL

DATE OF REGISTRATION	29/09/2014
TITLE	CHAIR

PRIORITY

PRIORITY NUMBER	DATE	COUNTRY
BR302014001489-7	04/04/2014	BRAZIL

DESIGN NUMBER	265730
CLASS	09-03

1)PARKSONS PACKAGING PVT. LTD., AN INDIAN COMPANY FORMED UNDER COMPANIES ACT 1956 HAVING ADDRESS
GATE NO. 357/77,79,81, CHAKAN-TALEGAON ROAD, KHARAB WADI, TALUKA KHED, CHAKAN, PUNE-410501 MAHARASHTRA STATE, INDIA

DATE OF REGISTRATION	17/09/2014
TITLE	INTEGRATED PACKAGING UNIT

PRIORITY NA

DESIGN NUMBER	264154
CLASS	15-04

1)KOBELCO CONSTRUCTION MACHINERY CO. LTD., A JAPANESE CORPORATION OF
2-1, ITSUKAICHIKOU 2-CHOME, SAEKI-KU, HIROSHIMA-SHI, HIROSHIMA, JAPAN

DATE OF REGISTRATION	18/07/2014
TITLE	POWER SHOVEL

PRIORITY

PRIORITY NUMBER	DATE	COUNTRY
2014-001290	24/01/2014	JAPAN

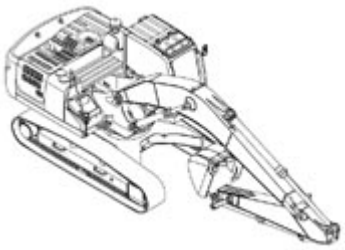

DESIGN NUMBER	264347
CLASS	12-02
1)M/S. KM BEST MEDICAL WORKS PVT. LTD HAVING PLACE OF BUSINESS AT KM PLAZA, 179/1, BY-PASS ROAD, MADURAI-625016, INDIAN NATIONALITY	
DATE OF REGISTRATION	30/07/2014
TITLE	STRETCHER
PRIORITY NA	

DESIGN NUMBER	266290
CLASS	05-05
1)M/S. BIBA APPARELS PRIVATE LIMITED, AN INDIAN PRIVATE LIMITED COMPANY INCORPORATED UNDER THE PROVISION OF THE COMPANIES ACT, 1956, AND HAVING ITS'S REGISTERED OFFICE AT RELIABLE HOUSE, SITUATED AT HANUMAN SILK MILL COMPOUND, KANJURMARG (WEST), OPP. HUMA MALL, MUMBAI-400 078 MAHARASHTRA, INDIA.	
DATE OF REGISTRATION	30/09/2014
TITLE	TEXTILE FABRIC
PRIORITY NA	

DESIGN NUMBER	265863
CLASS	23-04
1)GREE ELECTRIC APPLIANCES, INC. OF ZHUHAI, JINJI WEST ROAD, QIANSHAN ZHUHAI, GUANGDONG, 519070, CHINA	
DATE OF REGISTRATION	23/09/2014
TITLE	INDOOR UNIT OF AIR CONDITIONER

PRIORITY

PRIORITY NUMBER	DATE	COUNTRY
201430061780.1	24/03/2014	CHINA

DESIGN NUMBER	264156
CLASS	15-04

1)KOBELCO CONSTRUCTION MACHINERY CO. LTD., A JAPANESE CORPORATION OF
2-1, ITSUKAICHIKOU 2-CHOME, SAEKI-KU, HIROSHIMA-SHI, HIROSHIMA, JAPAN

DATE OF REGISTRATION	18/07/2014
TITLE	CONSOLE BOX FOR CONSTRUCTION MACHINE

PRIORITY

PRIORITY NUMBER	DATE	COUNTRY
201430020513.X	24/01/2014	CHINA

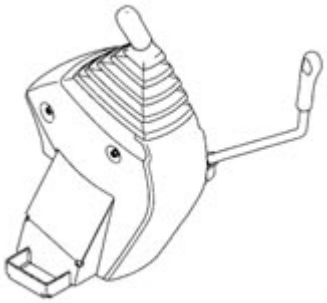

DESIGN NUMBER	264042
CLASS	24-02

1)LIFE TECHNOLOGIES CORPORATION, A CORPORATION OF THE STATE OF DELAWARE HAVING A PLACE OF BUSINESS AT
5791 VAN ALLEN WAY, CARLSBAD, CALIFORNIA 92008, USA

DATE OF REGISTRATION	15/07/2014
TITLE	MEDIA REHYDRATION CAPSULE

PRIORITY

PRIORITY NUMBER	DATE	COUNTRY
29/482,841	21/02/2014	U.S.A.

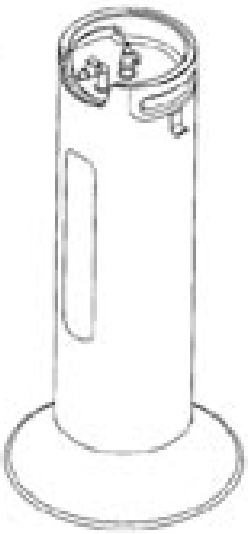

DESIGN NUMBER	265564
CLASS	19-07

1)RAGHUVIR LAXMAN CHARY NACHINOLKAR WHOSE ADDRESS IS
DEPARTMENT OF MECHANICAL ENGINEERING, GOVERNMENT POLYTECHNIC, ALTINHO PANAJI, STATE-GOA, 403001, INDIA A CITIZEN OF INDIA

DATE OF REGISTRATION	10/09/2014
TITLE	SOLAR SYSTEM MODEL

PRIORITY NA

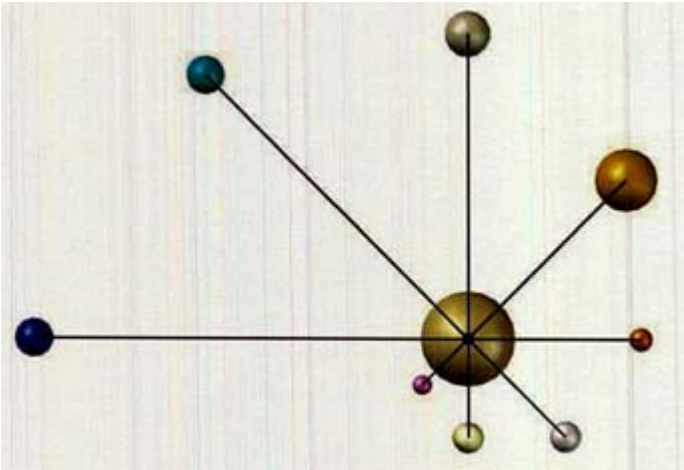

DESIGN NUMBER	265864
CLASS	23-04
1)GREE ELECTRIC APPLIANCES, INC. OF ZHUHAI, JINJI WEST ROAD, QIANSHAN ZHUHAI, GUANGDONG, 519070, CHINA	
DATE OF REGISTRATION	23/09/2014
TITLE	INDOOR UNIT OF AIR CONDITIONER

PRIORITY

PRIORITY NUMBER	DATE	COUNTRY
201430061780.1	24/03/2014	CHINA

DESIGN NUMBER	264746
CLASS	09-07
1)IPN INDIA PACKAGING PVT. LTD., AN INDIAN COMPANY, HAVING ITS ADDRESS AT GAT NUMBER 183, IPN CAMPUS, NEAR JOHN DEERE FACTORY, OFF PUNE-NAGAR ROAD, VILLAGE SANASWADI, TALUKA SHIRUR, PUNE-412208, MAHARASHTRA, INDIA	
DATE OF REGISTRATION	13/08/2014
TITLE	DROPPER SPOUT
PRIORITY NA	

DESIGN NUMBER	264378
CLASS	14-03
1)M/S ELCOM INNOVATIONS PRIVATE LIMITED, AN INDIAN COMPANY, OF 8TH FLOOR, WINDSOR IT PARK, A-1, SECTOR-125, NOIDA-201301, UTTAR PRADESH, INDIA	
DATE OF REGISTRATION	30/07/2014
TITLE	TELEPHONE
PRIORITY NA	

DESIGN NUMBER	267979
CLASS	06-01
1)THE SUPREME INDUSTRIES LTD., (AN INDIAN PUBLIC LIMITED COMPANY), 601 CENTRAL PLAZA, 2/6, SARAT BOSE ROAD, KOLKATA - 700020, WEST BENGAL, INDIA	
DATE OF REGISTRATION	08/12/2014
TITLE	CHAIR
PRIORITY NA	

DESIGN NUMBER	264157
CLASS	15-04
1)KOBELCO CONSTRUCTION MACHINERY CO. LTD., A JAPANESE CORPORATION OF 2-1, ITSUKAICHIKOU 2-CHOME, SAEKI-KU, HIROSHIMA-SHI, HIROSHIMA, JAPAN	
DATE OF REGISTRATION	18/07/2014
TITLE	REAR COVER FOR CONSTRUCTION MACHINE

PRIORITY

PRIORITY NUMBER	DATE	COUNTRY
201430020069.1	24/01/2014	CHINA

DESIGN NUMBER	263263
CLASS	08-05
1)3M INNOVATIVE PROPERTIES COMPANY, A COMPANY INCORPORATED IN THE STATE OF DELAWARE OF 3M CENTER, SAINT PAUL, MINNESOTA 55133-3427, U.S.A.	
DATE OF REGISTRATION	11/06/2014
TITLE	ADJUSTMENT VALVE FOR SPRAY GUN

PRIORITY

PRIORITY NUMBER	DATE	COUNTRY
29/476, 108	11/12/2013	U.S.A.

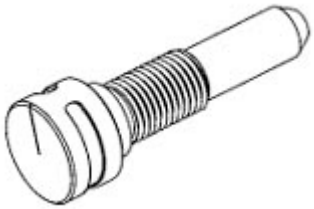

DESIGN NUMBER	264060
CLASS	15-01

1)USUI KOKUSAI SANGYO KAISHA LIMITED, A JAPANESE CORPORATION OF
131-2 NAGASAWA, SHIMIZU-CHO, SUNTO-GUN, SHIZUOKA 411 8610, JAPAN

DATE OF REGISTRATION	16/07/2014
TITLE	FUEL INJECTION PIPE

PRIORITY

PRIORITY NUMBER	DATE	COUNTRY
2014-1265	24/01/2014	JAPAN

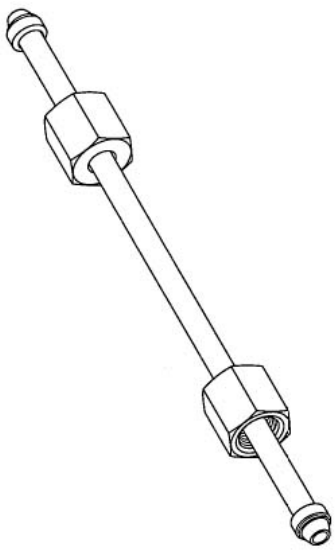

DESIGN NUMBER	265363
CLASS	02-02

1)RAMSON EXPORTS (INDIA), 808, STREET NO. 2, SHANKER LANE, GURU VIHAR, RAHON ROAD, LUDHIANA-141007 (PUNJAB), INDIA,
AN INDIAN PROPRIETORSHIP FIRM WHOSE PARTNERS ARE:- ARJUN SOOD AND KARUNA SOOD BEING INDIAN NATIONALS OF THE ABOVE ADDRESS

DATE OF REGISTRATION	02/09/2014
TITLE	T-SHIRT

PRIORITY NA

DESIGN NUMBER	265429
CLASS	09-01

1)RECKITT BENCKISER (BRANDS) LIMITED, A BRITISH COMPANY OF
103-105 BATH ROAD, SLOUGH BERKSHIRE, SL1 3UH, UNITED KINGDOM

DATE OF REGISTRATION	04/09/2014
TITLE	BOTTLE WITH CAP

PRIORITY

PRIORITY NUMBER	DATE	COUNTRY
002441477-0001	07/04/2014	OHIM

DESIGN NUMBER	265565
CLASS	11-02
1)RADIUS CORPORATION LTD. WHOSE ADDRESS IS 57-58, VARDHMAN NAGAR, RAJNANDGAON-491441, STATE-CHHATTISGARH, INDIA A REGISTERED COMPANY SITUATED IN INDIA	
DATE OF REGISTRATION	10/09/2014
TITLE	DECORATIVE ARTICLE
PRIORITY NA	

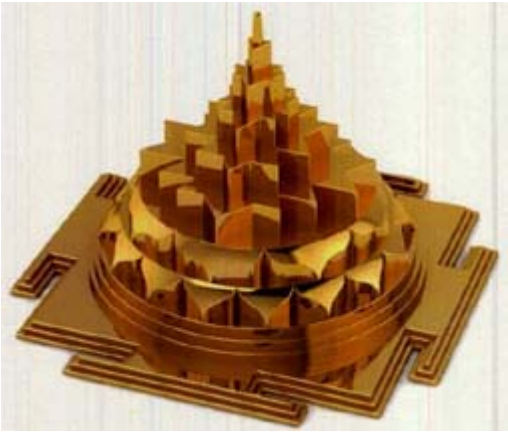

DESIGN NUMBER	260751
CLASS	09-07
1)N. G. TREXIM PVT. LTD. (AN INDIAN PRIVATE COMPANY DULY INCORPORATED UNDER THE INDIAN COMPANIES ACT 1956), OF 29B RABINDRA SARANI, 3RD FLOOR, ROOM NO.1/E, KOLKATA-700 073, WEST BENGAL, INDIA,	
DATE OF REGISTRATION	03/03/2014
TITLE	SEAL FOR LOCKING
PRIORITY NA	

DESIGN NUMBER	265694
CLASS	13-02
1)SMARTEN POWER SYSTEMS PVT. LTD., AN INDIAN COMPANY INCORPORATED UNDER THE INDIAN COMPANIES ACT, 1956, HAVING ITS ADDRESS AT SECTOR-10, NEAR NATHU SWEETS, VILLAGE KADIPUR, GURGAON, HARYANA, INDIA	
DATE OF REGISTRATION	15/09/2014
TITLE	INVERTER FRONT COVER
PRIORITY NA	

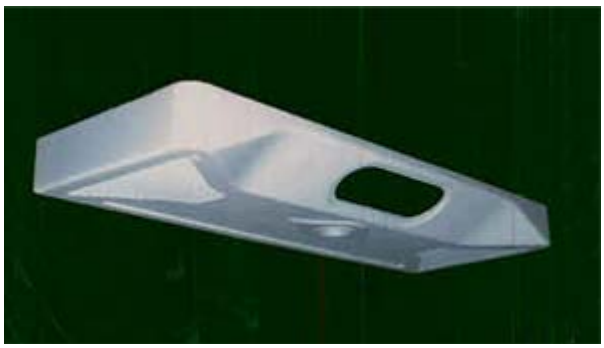

DESIGN NUMBER	264747	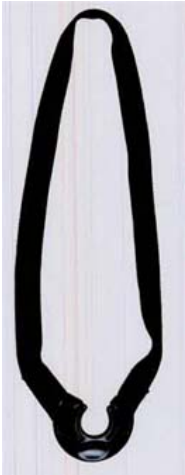
CLASS	07-99	
1)KOOL FRESH MINERAL WATER PVT. LTD., A COMPANY REGISTERED UNDER COMPANY ACT 1956 OF GATE NO. 143, AT POST NAVGHAR DIST RAIGAD, PIN-410205, MAHARASHTRA, INDIA		
DATE OF REGISTRATION	13/08/2014	
TITLE	BOTTLE HOLDER WITH STRAP	
PRIORITY NA		
DESIGN NUMBER	264840	
CLASS	01-01	
1)M/S. GOLDEN CHOCOLATES PRIVATE LIMITED (A COMPANY DULY INCORPORATED UNDER THE INDIAN COMPANIES ACT, 1956), J-6, SECTOR-4, BAWANA, DELHI-110039		
DATE OF REGISTRATION	19/08/2014	
TITLE	CHOCOLATE	
PRIORITY NA		
DESIGN NUMBER	264385	
CLASS	15-07	
1)LG ELECTRONICS INC. OF 20, YEOUIDO-DONG, YEONGDEUNGPO-GU, SEOUL 150- 721, REPUBLIC OF KOREA		
DATE OF REGISTRATION	30/07/2014	
TITLE	ICE TRAY SET	
PRIORITY NA		

DESIGN NUMBER	263051
CLASS	02-07
1)SHRI R. C. JAIN & SHRI SHIRISH JAIN (BOTH INDIAN NATIONALS) TRADING AS M/S KNITPRO INTERNATIONAL, B-43, SECTOR 80, PHASE-II, NOIDA-201305, (U.P.), [INDIA]	
DATE OF REGISTRATION	02/06/2014
TITLE	NEEDLE
PRIORITY NA	

DESIGN NUMBER	264061
CLASS	15-01
1)USUI KOKUSAI SANGYO KAISHA LIMITED, A JAPANESE CORPORATION OF 131-2 NAGASAWA, SHIMIZU-CHO, SUNTO-GUN, SHIZUOKA 411 8610, JAPAN	
DATE OF REGISTRATION	16/07/2014
TITLE	FUEL INJECTION PIPE

PRIORITY

PRIORITY NUMBER	DATE	COUNTRY
2014-1266	24/01/2014	JAPAN

DESIGN NUMBER	265430
CLASS	09-01
1)RECKITT BENCKISER (BRANDS) LIMITED, A BRITISH COMPANY OF 103-105 BATH ROAD, SLOUGH BERKSHIRE, SL1 3UH, UNITED KINGDOM	
DATE OF REGISTRATION	04/09/2014
TITLE	BOTTLE WITH CAP

PRIORITY

PRIORITY NUMBER	DATE	COUNTRY
002441477-0004	07/04/2014	OHIM

DESIGN NUMBER	260909	
CLASS	12-08	
1)M/S. GOENKA ELECTRIC MOTOR VEHICLES PRIVATE LIMITED, A COMPANY INCORPORATED UNDER INDIAN COMPANY ACT, 1956 ADDRESS AT 6, SHIVA ENCLAVE, PITAMPURA, DELHI-110034, INDIA, AND AN INDIAN		
DATE OF REGISTRATION	11/03/2014	
TITLE	E-RICKSHAW	
PRIORITY NA		

DESIGN NUMBER	263712	
CLASS	23-04	
1)DAYAL CHAND TRADING AS M/S. SIGMA REFRIGERATION WORKS, 3745, SHOP NO. 1 & 7, KUCHA PARMANAND, NETAJI SUBHASH MARG, DARYA GANJ, NEW DELHI-110002, INDIA (A SOLE PROPRIETORSHIP FIRM)		
DATE OF REGISTRATION	26/06/2014	
TITLE	REFRIGERANT LIQUID LINE FILTER DRIER	
PRIORITY NA		

DESIGN NUMBER	263053	
CLASS	02-07	
1)SHRI R. C. JAIN & SHRI SHIRISH JAIN (BOTH INDIAN NATIONALS) TRADING AS M/S KNITPRO INTERNATIONAL, B-43, SECTOR 80, PHASE-II, NOIDA-201305, (U.P.), [INDIA]		
DATE OF REGISTRATION	02/06/2014	
TITLE	NEEDLE	
PRIORITY NA		

DESIGN NUMBER	264167
CLASS	08-03

1)SUMITOMO ELECTRIC HARDMETAL CORP., A JAPANESE CORPORATION, OF
1-1, KOYAKITA 1-CHOME, ITAMI-SHI, HYOGO 664-0016, JAPAN

DATE OF REGISTRATION	21/07/2014
TITLE	INSERT FOR METAL CUTTING TOOL

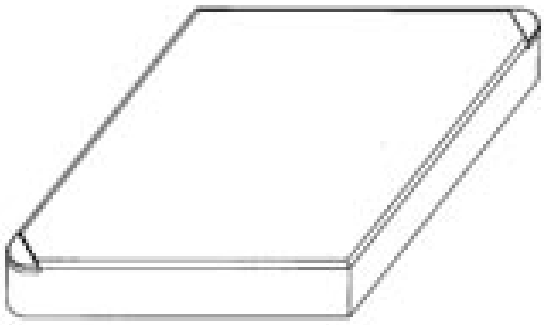

PRIORITY

PRIORITY NUMBER	DATE	COUNTRY
JP-2014-001088	22/01/2014	JAPAN

DESIGN NUMBER	265304
CLASS	14-03

1)LG ELECTRONICS INC.
128 YEOUI-DAERO, YEONGDEUNGPO - GU, SEOUL 150 - 721, REPUBLIC OF KOREA A CORPORATION INCORPORATED UNDER THE LAWS OF THE REPUBLIC OF KOREA

DATE OF REGISTRATION	01/09/2014
TITLE	MOBILE PHONE

PRIORITY

PRIORITY NUMBER	DATE	COUNTRY
30-2014-0017231	07/04/2014	REPUBLIC OF KOREA

DESIGN NUMBER	267868
CLASS	09-03

1)LION DATES IMPEX (P) LTD., A PRIVATE LIMITED COMPANY, REGISTERED AS PER INDIAN COMPANIES ACT, HAVING OFFICE AT
NO. 40, STERLING ROAD, NUNGAMBAKKAM, CHENNAI-600 034, TAMILNADU, INDIA

DATE OF REGISTRATION	03/12/2014
TITLE	CONTAINER

PRIORITY NA

DESIGN NUMBER	266367	
CLASS	06-11	
1)MRS. SAROJ VARA, UK NATIONAL, 1798 BEDONWELL ROAD, BEXLEYHEATH, LONDON KENT, DA75PU, UK.		
DATE OF REGISTRATION	30/09/2014	
TITLE	MAT	
PRIORITY NA		

DESIGN NUMBER	265369	
CLASS	02-02	
1)RAMSON EXPORTS (INDIA), 808, STREET NO. 2, SHANKER LANE, GURU VIHAR, RAHON ROAD, LUDHIANA-141007 (PUNJAB), INDIA, AN INDIAN PROPRIETORSHIP FIRM WHOSE PARTNERS ARE:- ARJUN SOOD AND KARUNA SOOD BEING INDIAN NATIONALS OF THE ABOVE ADDRESS		
DATE OF REGISTRATION	02/09/2014	
TITLE	T-SHIRT	
PRIORITY NA		

DESIGN NUMBER	265869	
CLASS	28-03	
1)KONINKLIJKE PHILIPS N.V., A COMPANY ORGANIZED AND EXISTING UNDER THE LAWS OF THE KINGDOM OF THE NETHERLANDS, RESIDING AT EINDHOVEN, WHOSE POST-OFFICE ADDRESS IS HIGH TECH CAMPUS 5, 5656 AE EINDHOVEN, THE NETHERLANDS		
DATE OF REGISTRATION	23/09/2014	
TITLE	HAIR STYLER	
PRIORITY		

PRIORITY NUMBER	DATE	COUNTRY
002430603-0001	24/03/2014	OHIM

DESIGN NUMBER	263068	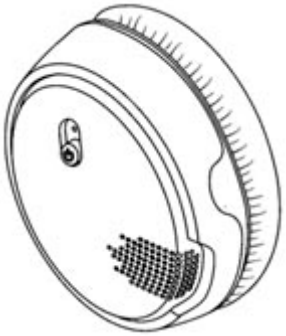
CLASS	14-01	
1)BOSE CORPORATION, A CORPORATION OF THE STATE OF DELAWARE, OF THE MOUNTAIN, MS3B1 FRAMINGHAM, MASSACHUSETTS 01701-9168, UNITED STATES OF AMERICA		
DATE OF REGISTRATION	03/06/2014	
TITLE	HEADPHONE EAR CUP	
PRIORITY		

PRIORITY NUMBER	DATE	COUNTRY
29/475,709	05/12/2013	U.S.A.

DESIGN NUMBER	266366	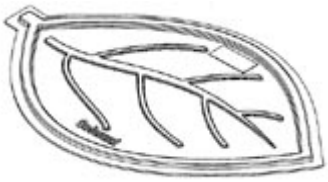
CLASS	06-11	
1)MRS. SAROJ VARA, UK NATIONAL, 1798 BEDONWELL ROAD, BEXLEYHEATH, LONDON KENT, DA75PU, UK.		
DATE OF REGISTRATION	30/09/2014	
TITLE	MAT	
PRIORITY NA		

DESIGN NUMBER	257667	
CLASS	11-01	
1)BIREN VAIDYA, INDIAN NATIONAL, 131, 13TH FLOOR, VALLABH APARTMENTS, 87, BHULABHAI DESAI ROAD, MUMBAI-400026, MAHARASHTRA, INDIA.		
DATE OF REGISTRATION	22/10/2013	
TITLE	BRACELET	
PRIORITY NA		

DESIGN NUMBER	264398
CLASS	09-01
1)UNILEVER PLC, A COMPANY REGISTERED IN ENGLAND AND WALES UNDER COMPANY NO. 41424 OF UNILEVER HOUSE, 100 VICTORIA EMBANKMENT, LONDON, EC4Y 0DY, UNITED KINGDOM	
DATE OF REGISTRATION	31/07/2014
TITLE	BOTTLE

PRIORITY

PRIORITY NUMBER	DATE	COUNTRY
002400473-0003	07/02/2014	OHIM

DESIGN NUMBER	267876
CLASS	09-07
1)SH. MANISH GOYAL, 133, KAPIL VIHAR, PITAMPURA, DELHI-110034, (INDIA). AN INDIAN NATIONAL OF THE ABOVE ADDRESS	
DATE OF REGISTRATION	03/12/2014
TITLE	BOTTLE CAP
PRIORITY NA	

DESIGN NUMBER	263877
CLASS	08-05
1)SULZER MIXPAC AG, OF RÜTISTRAßE 7, 9469 HAAG (RHEINTAL), SWITZERLAND	
DATE OF REGISTRATION	04/07/2014
TITLE	DISCHARGE DEVICE

PRIORITY

PRIORITY NUMBER	DATE	COUNTRY
002381236	07/01/2014	OHIM

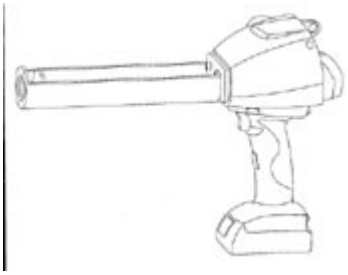

DESIGN NUMBER	263852
CLASS	13-03

1)PARVEEN KUMAR, PARVEEN KUMAR TRADERS,
408/5, AD-2, GALI NO-29, NAI BASTI, ANAND PARVAT, KAROL BAGH NEW DELHI-110005 (INDIA) AS INDIAN NATIONAL

DATE OF REGISTRATION	03/07/2014
TITLE	SWITCH BOARD

PRIORITY NA

DESIGN NUMBER	257669
CLASS	11-01

1)BIREN VAIDYA, INDIAN NATIONAL,
131, 13TH FLOOR, VALLABH APARTMENTS, 87, BHULABHAI DESAI ROAD, MUMBAI-400026, MAHARASHTRA, INDIA

DATE OF REGISTRATION	22/10/2013
TITLE	BRACELET

PRIORITY NA

DESIGN NUMBER	263308
CLASS	12-15

1)COMPAGNIE GENERALE DES ETABLISSEMENTS MICHELIN, A FRENCH COMPANY OF 12 COURS SABLON, FR-63000, CLERMONT-FERRAND, FRANCE, AND
MICHELIN RECHERCHE ET TECHNIQUE S.A., A SWISS COMPANY OF ROUTE LOUIS BRAILLE 10, CH-1763 GRANGES-PACCOT, SWITZERLAND

DATE OF REGISTRATION	13/06/2014
TITLE	TIRE TREAD

PRIORITY

PRIORITY NUMBER	DATE	COUNTRY
29/480,220	24/01/2014	U.S.A.

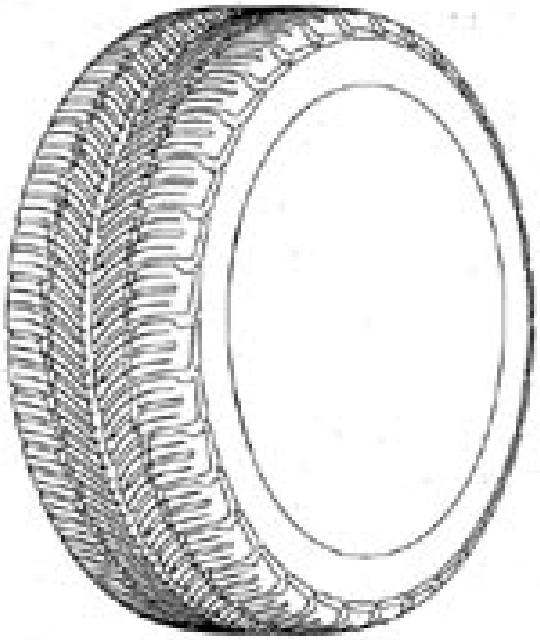

DESIGN NUMBER	264290
CLASS	09-07
1)DART INDUSTRIES INC., A CORPORATION FOUNDED UNDER THE LAWS OF DELAWARE, U.S.A. OF 14901 SOUTH ORANGE BLOSSOM TRAIL, ORLANDO, FLORIDA 32837, USA	
DATE OF REGISTRATION	28/07/2014
TITLE	COVER FOR LIQUID DISPENSER
PRIORITY	

PRIORITY NUMBER	DATE	COUNTRY
29/483,433	28/02/2014	U.S.A.

DESIGN NUMBER	265373
CLASS	08-08
1)RELIANCE JIO INFOCOMM LIMITED, AN INDIAN COMPANY INCORPORATED UNDER THE COMPANIES ACT, 1956), HAVING ITS REGISTERED OFFICE AT 3RD FLOOR, MAKER CHAMBER-IV, 222, NARIMAN POINT, MUMBAI-400021, MAHARASHTRA, INDIA	
DATE OF REGISTRATION	02/09/2014
TITLE	MOUNTING DEVICE FOR ROUTER
PRIORITY NA	

DESIGN NUMBER	264852
CLASS	23-01
1)THE SUPREME INDUSTRIES LTD., (AN INDIAN PUBLIC LIMITED COMPANY), 601 CENTRAL PLAZA, 2/6, SARAT BOSE ROAD, KOLKATA - 700020, WEST BENGAL, INDIA	
DATE OF REGISTRATION	19/08/2014
TITLE	FITTINGS FOR SEWERAGE DISPOSAL
PRIORITY NA	

DESIGN NUMBER	264397
CLASS	09-01

1)UNILEVER PLC, A COMPANY REGISTERED IN ENGLAND AND WALES UNDER COMPANY NO. 41424 OF
UNILEVER HOUSE, 100 VICTORIA EMBANKMENT, LONDON, EC4Y 0DY, UNITED KINGDOM

DATE OF REGISTRATION	31/07/2014
TITLE	BOTTLE

PRIORITY

PRIORITY NUMBER	DATE	COUNTRY
002400473-0001	07/02/2014	OHIM

DESIGN NUMBER	264472
CLASS	20-01

1)NAUTILUS HYOSUNG INC. A COMPANY INCORPORATED UNDER THE LAWS OF KOREA, NATIONALITY: KOREA, ADDRESS AT
281 GWANGPYEONG-RO, GANGNAM-GU, SEOUL, KOREA.

DATE OF REGISTRATION	05/08/2014
TITLE	AUTOMATED TELLER MACHINE

PRIORITY

PRIORITY NUMBER	DATE	COUNTRY
30-2014-0013316	18/03/2014	REPUBLIC OF KOREA

DESIGN NUMBER	264073
CLASS	23-02

1)GEBERIT INTERNATIONAL AG
SCHACHENSTRASSE 77, 8645 JONA, SWITZERLAND, A COMPANY OF SWITZERLAND

DATE OF REGISTRATION	16/07/2014
TITLE	CONTROL PANEL FOR TOILET FLUSH TANKS

PRIORITY

PRIORITY NUMBER	DATE	COUNTRY
787158501	17/01/2014	WIPO

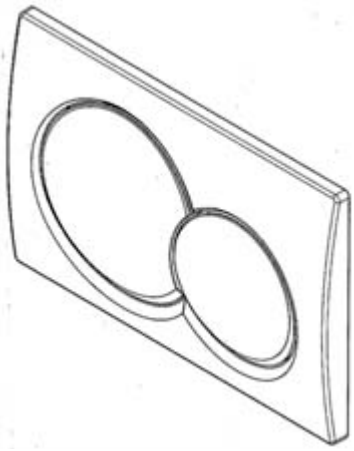

DESIGN NUMBER	267237
CLASS	06-01
1)NATIONAL INSTITUTE OF DESIGN LOCATED AT PALDI, AHMEDABAD 380007 GUJARAT, HAVING NATIONALITY AS INDIAN	
DATE OF REGISTRATION	07/11/2014
TITLE	TUBE SEAT
PRIORITY NA	

DESIGN NUMBER	257668
CLASS	11-01
1)BIREN VAIDYA, INDIAN NATIONAL, 131, 13TH FLOOR, VALLABH APARTMENTS, 87, BHULABHAI DESAI ROAD, MUMBAI-400026, MAHARASHTRA, INDIA	
DATE OF REGISTRATION	22/10/2013
TITLE	BRACELET
PRIORITY NA	

DESIGN NUMBER	265835
CLASS	06-01
1)NATIONAL PLASTO PRODUCTS PRIVATE LIMITED, AN INDIAN COMPANY HAVING ITS REGISTERED OFFICE AT 19, SUKEAS LANE, 1ST FLOOR, KOLKATA 700001, WEST BENGAL, INDIA	
DATE OF REGISTRATION	19/09/2014
TITLE	STOOL
PRIORITY NA	

DESIGN NUMBER	264414
CLASS	09-03
1)THE SUPREME INDUSTRIES LTD., (AN INDIAN PUBLIC LIMITED COMPANY), 601 CENTRAL PLAZA, 2/6, SARAT BOSE ROAD, KOLKATA - 700020, WEST BENGAL, INDIA	
DATE OF REGISTRATION	01/08/2014
TITLE	COVER FOR COMPOSITE GAS CYLINDER
PRIORITY NA	

DESIGN NUMBER	266054
CLASS	99-00
1)ONKAR TIWARI (DIRECTOR), NATIONALITY INDIAN, TRADING AS ASHWATH INFRATECH PVT. LTD., (INDIAN) WHOSE ADDRESS IS 1ST FLOOR, 29, COMMUNITY CENTRE, EAST OF KAILASH, NEW DELHI-110065 (INDIA)	
DATE OF REGISTRATION	26/09/2014
TITLE	WALL GARDEN BUCKET
PRIORITY NA	

DESIGN NUMBER	267097
CLASS	05-05
1)PARRY MURRAY & CO. LTD., COMPANY REGISTERED UNDER THE LAWS OF ENGLAND AND WALES, HAVING ITS PRINCIPAL PLACE OF BUSINESS AT 3RD FLOOR, SIMPSON HOUSE, 6 CHERRY ORCHARD ROAD, CROYDON, CRO 6BA, UNITED KINGDOM	
DATE OF REGISTRATION	30/10/2014
TITLE	TEXTILE FABRIC
PRIORITY NA	

DESIGN NUMBER	257671
CLASS	11-01
1)BIREN VAIDYA, INDIAN NATIONAL, 131, 13TH FLOOR, VALLABH APARTMENTS, 87, BHULABHAI DESAI ROAD, MUMBAI-400026, MAHARASHTRA, INDIA.	
DATE OF REGISTRATION	22/10/2013
TITLE	EARRING SET
PRIORITY NA	

DESIGN NUMBER	268147
CLASS	09-09
1)BRABANTIA NEDERLAND B.V., A LIMITED LIABILITY COMPANY UNDER DUTCH LAW, DE HAAK 14, 5555 XK VALKENSWAARD, THE NETHERLANDS	
DATE OF REGISTRATION	12/12/2014
TITLE	BIN

PRIORITY

PRIORITY NUMBER	DATE	COUNTRY
002554188-0001	09/10/2014	OHIM

DESIGN NUMBER	267243
CLASS	12-11
1)BAJAJ AUTO LIMITED, AN INDIAN COMPANY, INCORPORATED UNDER THE COMPANIES ACT OF 1956, HAVING ITS PRINCIPAL PLACE OF BUSINESS AT NEW 2ND & 3RD FLOOR, KHIVRAJ BUILDING, NO. 616, ANNASALAI, CHENNAI - 600006, STATE OF TAMIL NADU, INDIA, AND REGISTERED OFFICE AT AKURDI, PUNE-411035, STATE OF MAHARASHTRA, INDIA	
DATE OF REGISTRATION	07/11/2014
TITLE	MOTORCYCLE
PRIORITY NA	

DESIGN NUMBER	266422	
CLASS	02-04	
1)M/S R K INTERNATIONAL, E-11, DSIDC, INDSTRIAL COMPLEX, ROHTAK ROAD, NANGLOI, DELHI-110041, AN INDIAN PROPRIETORSHIP FIRM, WHOSE PROPRIETOR IS RAJENDRA KUMAR JAIN, OF ABOVE ADDRESS, AN INDIAN NATIONAL		
DATE OF REGISTRATION	07/10/2014	
TITLE	SOLE FOR FOOTWEAR	
PRIORITY NA		

DESIGN NUMBER	267098	
CLASS	05-05	
1)PARRY MURRAY & CO. LTD., COMPANY REGISTERED UNDER THE LAWS OF ENGLAND AND WALES, HAVING ITS PRINCIPAL PLACE OF BUSINESS AT 3RD FLOOR, SIMPSON HOUSE, 6 CHERRY ORCHARD ROAD, CROYDON, CRO 6BA, UNITED KINGDOM		
DATE OF REGISTRATION	30/10/2014	
TITLE	TEXTILE FABRIC	
PRIORITY NA		

DESIGN NUMBER	257672	
CLASS	11-01	
1)BIREN VAIDYA, INDIAN NATIONAL, 131, 13TH FLOOR, VALLABH APARTMENTS, 87, BHULABHAI DESAI ROAD, MUMBAI-400 026, MAHARASHTRA, INDIA		
DATE OF REGISTRATION	22/10/2013	
TITLE	EARRING SET	
PRIORITY NA		

DESIGN NUMBER	264815	
CLASS	12-15	
1)FORTUNE GOLD ENTERPRISES LTD. A COMPANY INCORPORATED UNDER THE LAWS OF REPUBLIC OF SEYCHELLES, NATIONALITY: REPUBLIC OF SEYCHELLES ADDRESS AT SUITE 13, FIRST FLOOR, OLIAJI TRADE CENTER, FRANCIS RACHEL STREET, VICTORIA, MAHE, ZIP CODE: 999126 REPUBLIC OF SEYCHELLES		
DATE OF REGISTRATION	18/08/2014	
TITLE	TYRE	
PRIORITY NA		

DESIGN NUMBER	267344	
CLASS	23-04	
1)CROMPTON GREAVES LIMITED, CG HOUSE, 6TH FLOOR, DR. ANNIE BESANT ROAD, WORLI, MUMBAI - 400030, MAHARASHTRA, INDIA; AN INDIAN COMPANY		
DATE OF REGISTRATION	12/11/2014	
TITLE	AIR COOLER	
PRIORITY NA		

DESIGN NUMBER	263950	
CLASS	06-10	
1)(1) MILANBHAI MAGANBHAI GAJERA (2) MANOJBHAI BABUBHAI MUNGPARA., BOTH INDIAN NATIONAL PARTNERS OF M/S. ANJANI ENTERPRISE., AN INDIAN PARTNERSHIP FIRM., HAVING ITS PRINCIPAL PLACE OF BUSINESS AT, SHIVAM IND. AREA, NR. HARSODA FOUNDRY, B/H. RIDDHI SIDDHI SOCIETY, SANDHIYA POOL, N.H. 8, RAJKOT-360 002. GUJARAT-INDIA.		
DATE OF REGISTRATION	10/07/2014	
TITLE	CURTAIN BRACKET	
PRIORITY NA		

DESIGN NUMBER	264086
CLASS	14-01

1)BOSE CORPORATION, A CORPORATION OF THE STATE OF DELAWARE, OF
THE MOUNTAIN, MS 3B1 FRAMINGHAM, MASSACHUSETTS 01701-9168, UNITED STATES OF AMERICA

DATE OF REGISTRATION	17/07/2014
TITLE	HEADPHONES

PRIORITY

PRIORITY NUMBER	DATE	COUNTRY
29/480,912	30/01/2014	U.S.A.

DESIGN NUMBER	265591
CLASS	02-02

1)RAMSON EXPORTS (INDIA), 808, STREET NO. 2, SHANKER LANE, GURU VIHAR, RAHON ROAD, LUDHIANA-141007 (PUNJAB), INDIA,
AN INDIAN PROPRIETORSHIP FIRM WHOSE PARTNERS ARE:- ARJUN SOOD AND KARUNA SOOD BEING INDIAN NATIONALS OF THE ABOVE ADDRESS

DATE OF REGISTRATION	10/09/2014
TITLE	T-SHIRT

PRIORITY NA

DESIGN NUMBER	261018
CLASS	28-03

1)MR. FAYYAS.M.P. S/O M.P.ANWAR, RESIDING AT
‘‘MUBARACK’’, DHARMADOM.P.O. THALASSERRY, KANNUR DISTRICT, KERALA, PIN-670661, INDIAN NATIONAL

DATE OF REGISTRATION	18/03/2014
TITLE	OIL APPLICATOR LID

PRIORITY NA

DESIGN NUMBER	267099
CLASS	05-05

1)PARRY MURRAY & CO. LTD., COMPANY REGISTERED UNDER THE LAWS OF ENGLAND AND WALES, HAVING ITS PRINCIPAL PLACE OF BUSINESS AT
3RD FLOOR, SIMPSON HOUSE, 6 CHERRY ORCHARD ROAD, CROYDON, CRO 6BA, UNITED KINGDOM

DATE OF REGISTRATION	30/10/2014
TITLE	TEXTILE FABRIC

PRIORITY NA

DESIGN NUMBER	264816
CLASS	12-15

1)FORTUNE GOLD ENTERPRISES LTD. A COMPANY INCORPORATED UNDER THE LAWS OF REPUBLIC OF SEYCHELLES, NATIONALITY: REPUBLIC OF SEYCHELLES ADDRESS AT
SUITE 13, FIRST FLOOR, OLIAJI TRADE CENTER, FRANCIS RACHEL STREET, VICTORIA, MAHE, ZIP CODE: 999126 REPUBLIC OF SEYCHELLES

DATE OF REGISTRATION	18/08/2014
TITLE	TYRE

PRIORITY NA

DESIGN NUMBER	268154
CLASS	07-02

1)KONINKLIJKE PHILIPS N.V., A COMPANY ORGANIZED AND EXISTING UNDER THE LAWS OF THE KINGDOM OF THE NETHERLANDS, RESIDING AT EINDHOVEN,
WHOSE POST-OFFICE ADDRESS IS HIGH TECH CAMPUS 5, 5656 AE EINDHOVEN, THE NETHERLANDS

DATE OF REGISTRATION	12/12/2014
TITLE	SMOKELESS GRILL

PRIORITY

PRIORITY NUMBER	DATE	COUNTRY
002496422-0001	04/07/2014	OHIM

DESIGN NUMBER	267900	
CLASS	06-01	
1)NATIONAL INSTITUTE OF DESIGN LOCATED AT PALDI, AHMEDABAD-380007, GUJARAT, HAVING NATIONALITY AS INDIAN		
DATE OF REGISTRATION	04/12/2014	
TITLE	BAR SEAT	
PRIORITY NA		

DESIGN NUMBER	267245	
CLASS	12-11	
1)BAJAJ AUTO LIMITED, AN INDIAN COMPANY, INCORPORATED UNDER THE COMPANIES ACT OF 1956, HAVING ITS PRINCIPAL PLACE OF BUSINESS AT NEW 2ND & 3RD FLOOR, KHIVRAJ BUILDING, NO. 616, ANNASALAI, CHENNAI - 600006, STATE OF TAMIL NADU, INDIA, AND REGISTERED OFFICE AT AKURDI, PUNE-411035, STATE OF MAHARASHTRA, INDIA		
DATE OF REGISTRATION	07/11/2014	
TITLE	RADIATOR SHROUD FOR MOTORCYCLE	
PRIORITY NA		

DESIGN NUMBER	267345	
CLASS	23-04	
1)CROMPTON GREAVES LIMITED, CG HOUSE, 6TH FLOOR, DR. ANNIE BESANT ROAD, WORLI, MUMBAI - 400030, MAHARASHTRA, INDIA; AN INDIAN COMPANY		
DATE OF REGISTRATION	12/11/2014	
TITLE	TABLE FAN	
PRIORITY NA		

DESIGN NUMBER	265596
CLASS	02-02
1)RAMSON EXPORTS (INDIA), 808, STREET NO. 2, SHANKER LANE, GURU VIHAR, RAHON ROAD, LUDHIANA-141007 (PUNJAB), INDIA, AN INDIAN PROPRIETORSHIP FIRM WHOSE PARTNERS ARE:- ARJUN SOOD AND KARUNA SOOD BEING INDIAN NATIONALS OF THE ABOVE ADDRESS	
DATE OF REGISTRATION	10/09/2014
TITLE	T-SHIRT
PRIORITY NA	

DESIGN NUMBER	267100
CLASS	05-05
1)PARRY MURRAY & CO. LTD., COMPANY REGISTERED UNDER THE LAWS OF ENGLAND AND WALES, HAVING ITS PRINCIPAL PLACE OF BUSINESS AT 3RD FLOOR, SIMPSON HOUSE, 6 CHERRY ORCHARD ROAD, CROYDON, CRO 6BA, UNITED KINGDOM	
DATE OF REGISTRATION	30/10/2014
TITLE	TEXTILE FABRIC
PRIORITY NA	

DESIGN NUMBER	265627
CLASS	12-11
1)TUBE INVESTMENTS OF INDIA LIMITED, AN INDIAN COMPANY INCORPORATED UNDER THE COMPANIES ACT OF 1913, HAVING ITS PRINCIPAL PLACE OF BUSINESS AT "DARE HOUSE", 234, N. S. C. BOSE ROAD, CHENNAI - 600001, STATE OF TAMIL NADU, INDIA	
DATE OF REGISTRATION	11/09/2014
TITLE	FRAME FOR BICYCLE
PRIORITY NA	

DESIGN NUMBER	264817
CLASS	12-15

1)"FORTUNE GOLD ENTERPRISES LTD." A COMPANY INCORPORATED UNDER THE LAWS OF REPUBLIC OF SEYCHELLES, NATIONALITY: REPUBLIC OF SEYCHELLES ADDRESS AT
SUITE 13, FIRST FLOOR, OLIAJI TRADE CENTER, FRANCIS RACHEL STREET, VICTORIA, MAHE, ZIP CODE: 999126 REPUBLIC OF SEYCHELLES

DATE OF REGISTRATION	18/08/2014
TITLE	TYRE

PRIORITY NA

DESIGN NUMBER	268155
CLASS	14-03

1)KONINKLIJKE PHILIPS N.V., A COMPANY ORGANIZED AND EXISTING UNDER THE LAWS OF THE KINGDOM OF THE NETHERLANDS, RESIDING AT EINDHOVEN,
WHOSE POST-OFFICE ADDRESS IS HIGH TECH CAMPUS 5, 5656 AE EINDHOVEN, THE NETHERLANDS

DATE OF REGISTRATION	12/12/2014
TITLE	REMOTE CONTROL UNIT

PRIORITY

PRIORITY NUMBER	DATE	COUNTRY
002496414-0001	04/07/2014	OHIM

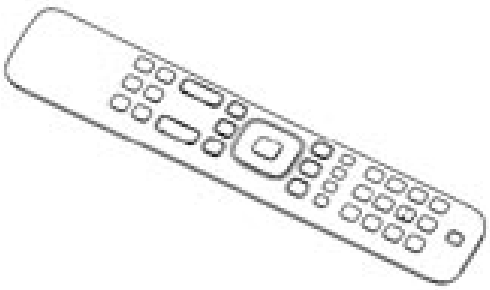

DESIGN NUMBER	267901
CLASS	06-01

1)NATIONAL INSTITUTE OF DESIGN LOCATED AT
PALDI, AHMEDABAD-380007, GUJARAT, HAVING NATIONALITY AS INDIAN

DATE OF REGISTRATION	04/12/2014
TITLE	CHAIR

PRIORITY NA

DESIGN NUMBER	264001
CLASS	24-01
1)ZEVEX, INC. NATIONALITY: UNITED STATES OF AMERICA, ADDRESS AT 4314 ZEVEX PARK LANE SALT LAKE CITY, UT 84123, UNITED STATES OF AMERICA	
DATE OF REGISTRATION	14/07/2014
TITLE	FEEDING PUMP FOR ENTERAL DELIVERY OF NUTRITIONAL FLUIDS TO A PATIENT

PRIORITY

PRIORITY NUMBER	DATE	COUNTRY
29/483,182	26/02/2014	U.S.A.

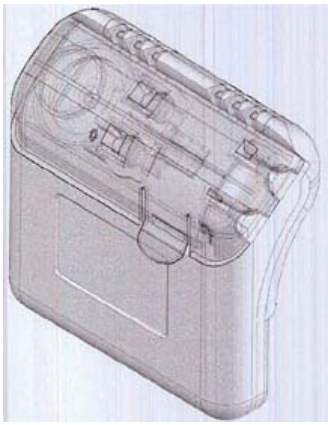

DESIGN NUMBER	265347
CLASS	05-05
1)JADE ESERVICES PRIVATE LIMITED HAVING ADDRESS AS PLOT NO. 103, UDYOG VIHAR, PHASE-I, GURGAON-122016, HARYANA, INDIA	
DATE OF REGISTRATION	02/09/2014
TITLE	TEXTILE FABRIC
PRIORITY NA	

DESIGN NUMBER	263476
CLASS	14-02
1)KANHATECH SOLUTIONS LIMITED, 74, PRESTIGE FEROZE BUILDING, CUNNINGHAM ROAD, BANGALORE, KARNATAKA-560052, INDIA	
DATE OF REGISTRATION	18/06/2014
TITLE	PAYMENT DEVICE
PRIORITY NA	

DESIGN NUMBER	267102
CLASS	05-05
1)PARRY MURRAY & CO. LTD., COMPANY REGISTERED UNDER THE LAWS OF ENGLAND AND WALES, HAVING ITS PRINCIPAL PLACE OF BUSINESS AT 3RD FLOOR, SIMPSON HOUSE, 6 CHERRY ORCHARD ROAD, CROYDON, CRO 6BA, UNITED KINGDOM	
DATE OF REGISTRATION	30/10/2014
TITLE	TEXTILE FABRIC
PRIORITY NA	

DESIGN NUMBER	265787
CLASS	14-03
1)VIVO MOBILE COMMUNICATION CO., LTD, A COMPANY INCORPORATED UNDER THE LAWS OF CHINA NATIONALITY: CHINA, ADDRESS AT #283, BBK ROAD, WUSHA, CHANG'AN, DONGGUAN CITY GUANGDONG, CHINA.	
DATE OF REGISTRATION	22/09/2014
TITLE	MOBILE PHONE
PRIORITY	

PRIORITY NUMBER	DATE	COUNTRY
201430086322.3	12/04/2014	CHINA

DESIGN NUMBER	264819
CLASS	12-15
1)"FORTUNE GOLD ENTERPRISES LTD." A COMPANY INCORPORATED UNDER THE LAWS OF REPUBLIC OF SEYCHELLES, NATIONALITY: REPUBLIC OF SEYCHELLES ADDRESS AT SUITE 13, FIRST FLOOR, OLIAJI TRADE CENTER, FRANCIS RACHEL STREET, VICTORIA, MAHE, ZIP CODE: 999126 REPUBLIC OF SEYCHELLES.	
DATE OF REGISTRATION	18/08/2014
TITLE	TYRE
PRIORITY NA	

DESIGN NUMBER	264432
CLASS	14-02
1)AMAZON TECHNOLOGIES, INC. A COMPANY ORGANIZED AND EXISTING UNDER THE LAWS OF UNITED STATES, HAVING ITS OFFICE AT P.O. BOX 8102, RENO, NEVADA 89507, UNITED STATES OF AMERICA	
DATE OF REGISTRATION	04/08/2014
TITLE	ELECTRONIC DEVICE COVER

PRIORITY

PRIORITY NUMBER	DATE	COUNTRY
29/482,837	21/02/2014	U.S.A.

DESIGN NUMBER	267903
CLASS	06-01
1)NATIONAL INSTITUTE OF DESIGN LOCATED AT PALDI, AHMEDABAD-380007, GUJARAT, HAVING NATIONALITY AS INDIAN	
DATE OF REGISTRATION	04/12/2014
TITLE	LOW SEAT
PRIORITY NA	

DESIGN NUMBER	267348
CLASS	23-04
1)CROMPTON GREAVES LIMITED, CG HOUSE, 6TH FLOOR, DR. ANNIE BESANT ROAD, WORLI, MUMBAI - 400030, MAHARASHTRA, INDIA; AN INDIAN COMPANY	
DATE OF REGISTRATION	12/11/2014
TITLE	PEDESTAL FAN
PRIORITY NA	

DESIGN NUMBER	267480
CLASS	09-03
1)ADICO SPARES PRIVATE LIMITED (A COMPANY INCORPORATED UNDER THE COMPANIES ACT, 1956) HAVING ITS PLACE OF BUSINESS AT 11, AJI VASAHAT, PLOT NO. 840, AJI VASAHAT, NEAR OLD TELEPHONE EXCHANGE, RAJKOT-360003 (GUJARAT) INDIA	
DATE OF REGISTRATION	18/11/2014
TITLE	CONTAINER
PRIORITY NA	

DESIGN NUMBER	265348
CLASS	05-05
1)JADE ESERVICES PRIVATE LIMITED HAVING ADDRESS AS PLOT NO. 103, UDYOG VIHAR, PHASE-I, GURGAON-122016, HARYANA, INDIA	
DATE OF REGISTRATION	02/09/2014
TITLE	TEXTILE FABRIC
PRIORITY NA	

DESIGN NUMBER	265966
CLASS	15-99
1)SPRAY ENGINEERING DEVICES LIMITED, AN INDIAN COMPANY INCORPORATED UNDER THE PROVISION OF THE COMPANIES ACT, 1956, HAVING ITS REGISTERED OFFICE AT PLOT NO. 25, INDUSTRIAL AREA, PHASE-II, CHANDIGARH-160002 (U.T.), INDIA	
DATE OF REGISTRATION	24/09/2014
TITLE	PLATE EVAPORATOR
PRIORITY NA	

DESIGN NUMBER	267105
CLASS	05-05
1)PARRY MURRAY & CO. LTD., COMPANY REGISTERED UNDER THE LAWS OF ENGLAND AND WALES, HAVING ITS PRINCIPAL PLACE OF BUSINESS AT 3RD FLOOR, SIMPSON HOUSE, 6 CHERRY ORCHARD ROAD, CROYDON, CRO 6BA, UNITED KINGDOM	
DATE OF REGISTRATION	30/10/2014
TITLE	TEXTILE FABRIC
PRIORITY NA	

DESIGN NUMBER	264820
CLASS	12-15
1)FORTUNE GOLD ENTERPRISES LTD. A COMPANY INCORPORATED UNDER THE LAWS OF REPUBLIC OF SEYCHELLES, NATIONALITY: REPUBLIC OF SEYCHELLES ADDRESS AT SUITE 13, FIRST FLOOR, OLIAJI TRADE CENTER, FRANCIS RACHEL STREET, VICTORIA, MAHE, ZIP CODE: 999126 REPUBLIC OF SEYCHELLES.	
DATE OF REGISTRATION	18/08/2014
TITLE	TYRE
PRIORITY NA	

DESIGN NUMBER	264915
CLASS	12-16
1)JNS INSTRUMENTS LIMITED (A REGISTERED INDIAN COMPANY HAVING A REGISTERED LEGAL ADDRESS OF G.I.-48, GT KARNAL ROAD INDUSTRIAL AREA, DELHI, INDIA),	
DATE OF REGISTRATION	21/08/2014
TITLE	FUEL UNIT ASSEMBLY FOR TWO WHEELERS
PRIORITY NA	

DESIGN NUMBER	267906
CLASS	06-01
1)NATIONAL INSTITUTE OF DESIGN LOCATED AT PALDI, AHMEDABAD-380007, GUJARAT, HAVING NATIONALITY AS INDIAN	
DATE OF REGISTRATION	04/12/2014
TITLE	STOOL
PRIORITY NA	

DESIGN NUMBER	267351
CLASS	13-03
1)YAZAKI CORPORATION, A JAPANESE CORPORATION OF 4-28, MITA 1-CHOME, MINATO-KU, TOKYO 108-0073, JAPAN	
DATE OF REGISTRATION	12/11/2014
TITLE	ELECTRICAL CONNECTOR HOUSING

PRIORITY

PRIORITY NUMBER	DATE	COUNTRY
2014-012923	16/06/2014	JAPAN

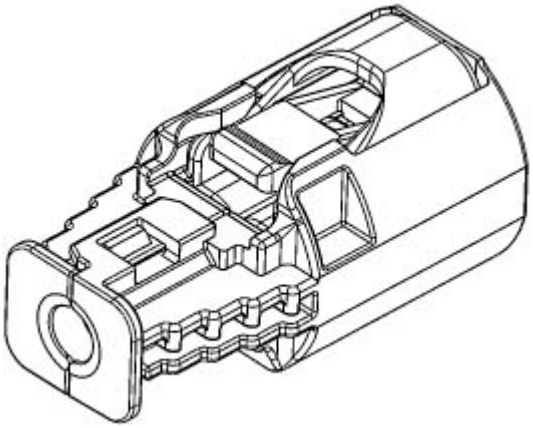

DESIGN NUMBER	267486
CLASS	12-16
1)SUZUKI MOTOR CORPORATION, A JAPANESE CORPORATION OF 300, TAKATSUKA-CHO, MINAMI-KU, HAMAMATSU-SHI, SHIZUOKA-KEN, JAPAN	
DATE OF REGISTRATION	18/11/2014
TITLE	FRONT BUMPER FOR VEHICLE

PRIORITY

PRIORITY NUMBER	DATE	COUNTRY
2014-018401	25/08/2014	JAPAN

DESIGN NUMBER	265349
CLASS	05-05
1)JADE ESERVICES PRIVATE LIMITED HAVING ADDRESS AS PLOT NO. 103, UDYOG VIHAR, PHASE-I, GURGAON-122016, HARYANA, INDIA	
DATE OF REGISTRATION	02/09/2014
TITLE	TEXTILE FABRIC
PRIORITY NA	

DESIGN NUMBER	265967
CLASS	15-99
1)SPRAY ENGINEERING DEVICES LIMITED, AN INDIAN COMPANY INCORPORATED UNDER THE PROVISION OF THE COMPANIES ACT, 1956, HAVING ITS REGISTERED OFFICE AT PLOT NO. 25, INDUSTRIAL AREA, PHASE-II, CHANDIGARH-160 002 (U.T.), INDIA	
DATE OF REGISTRATION	24/09/2014
TITLE	MOLASSES CONDITIONER
PRIORITY NA	

DESIGN NUMBER	267106
CLASS	05-05
1)PARRY MURRAY & CO. LTD., COMPANY REGISTERED UNDER THE LAWS OF ENGLAND AND WALES, HAVING ITS PRINCIPAL PLACE OF BUSINESS AT 3RD FLOOR, SIMPSON HOUSE, 6 CHERRY ORCHARD ROAD, CROYDON, CRO 6BA, UNITED KINGDOM	
DATE OF REGISTRATION	30/10/2014
TITLE	TEXTILE FABRIC
PRIORITY NA	

DESIGN NUMBER	267487
CLASS	12-16
1)SUZUKI MOTOR CORPORATION, A JAPANESE CORPORATION OF 300, TAKATSUKA-CHO, MINAMI-KU, HAMAMATSU-SHI, SHIZUOKA-KEN, JAPAN	
DATE OF REGISTRATION	18/11/2014
TITLE	REAR BUMPER FOR VEHICLE
PRIORITY	

PRIORITY NUMBER	DATE	COUNTRY
2014-018402	25/08/2014	JAPAN

DESIGN NUMBER	265350
CLASS	05-05
1)JADE ESERVICES PRIVATE LIMITED HAVING ADDRESS AS PLOT NO. 103, UDYOG VIHAR, PHASE-I, GURGAON-122016, HARYANA, INDIA	
DATE OF REGISTRATION	02/09/2014
TITLE	TEXTILE FABRIC
PRIORITY NA	

DESIGN NUMBER	263590
CLASS	09-03
1)DRUMS FOOD INTERNATIONAL PVT. LTD., AN INDIAN COMPANY HAVING ADDRESS AT PLOT NO. 9, OFFICE NO 2, BEHIND SAMRUDH CNG PUMP, NEAR PHOENIX MARKETCITY MALL, LBS MARG, KURLA WEST, MUMBAI 400070, INDIA	
DATE OF REGISTRATION	23/06/2014
TITLE	PACKING UNIT
PRIORITY NA	

DESIGN NUMBER	261515
CLASS	06-05

1)APRON MOBILITY GIDA INSAAT MUHENDISLIK, VE REKLAM LIMITED SIRKETI, OZLEM MAH. BEYSEHIR CEVRE YOLU CAD. REYHAN, SIT. ALTI NO. 60/B, SELCUKLU KONYA, TURKIYE.
A COMPANY INCORPORATED UNDER THE LAWS OF TURKEY, OF THE ABOVE ADDRESS

DATE OF REGISTRATION	03/04/2014
TITLE	CHILDREN BED

PRIORITY NA

DESIGN NUMBER	267108
CLASS	05-05

1)PARRY MURRAY & CO. LTD., COMPANY REGISTERED UNDER THE LAWS OF ENGLAND AND WALES, HAVING ITS PRINCIPAL PLACE OF BUSINESS AT
3RD FLOOR, SIMPSON HOUSE, 6 CHERRY ORCHARD ROAD, CROYDON, CRO 6BA, UNITED KINGDOM

DATE OF REGISTRATION	30/10/2014
TITLE	TEXTILE FABRIC

PRIORITY NA

DESIGN NUMBER	264361
CLASS	24-02

1)PFIZER LIMITED, A COMPANY INCORPORATED UNDER THE LAWS OF UNITED KINGDOM OF THE ADDRESS
RAMSGATE ROAD, SANDWICH, KENT CT13 9NJ, UNITED KINGDOM

DATE OF REGISTRATION	30/07/2014
TITLE	INJECTOR USED FOR MEDICINAL/COSMETIC PURPOSES

PRIORITY

PRIORITY NUMBER	DATE	COUNTRY
002398792-0005	05/02/2014	OHIM

DESIGN NUMBER	267908
CLASS	06-01
1)NATIONAL INSTITUTE OF DESIGN LOCATED AT PALDI, AHMEDABAD-380007, GUJARAT, HAVING NATIONALITY AS INDIAN	
DATE OF REGISTRATION	04/12/2014
TITLE	SEAT
PRIORITY NA	

DESIGN NUMBER	264017
CLASS	15-06
1)SANTONI S.P.A., VIA CARLO FENZI, 14, 25135 BRESCIA, ITALY, NATIONALITY: ITALY	
DATE OF REGISTRATION	14/07/2014
TITLE	KNITTING HEAD FOR A KNITTING MACHINE

PRIORITY

PRIORITY NUMBER	DATE	COUNTRY
BS2014O000002	15/01/2014	ITALY

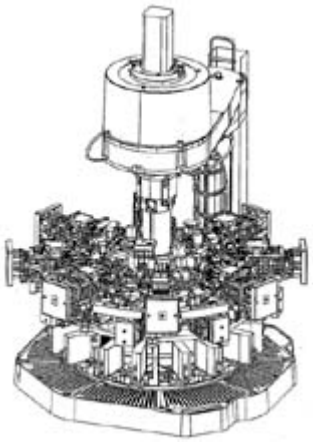

DESIGN NUMBER	261148
CLASS	06-01
1)FORMWAY FURNITURE LIMITED, A NEW ZEALAND COMPANY, OF 43B SEAVIEW ROAD, SEAVIEW, LOWER HUTT, NEW ZEALAND 5010	
DATE OF REGISTRATION	20/03/2014
TITLE	CHAIR

PRIORITY

PRIORITY NUMBER	DATE	COUNTRY
29/467,559	20/09/2013	U.S.A.

DESIGN NUMBER	265982
CLASS	10-05
1)M/S KEVA INDUSTRIES, NEAR OCTROI POST, G. T. ROAD, SAHNEWAL, LUDHIANA-141120 (PUNJAB) INDIA AN INDIAN PROPRIETORSHIP FIRM WHOSE PROPRIETOR IS:- KARAN GOEL BEING INDIAN NATIONALS OF THE ABOVE ADDRESS	
DATE OF REGISTRATION	24/09/2014
TITLE	REGULATOR FOR GAS CYLINDER
PRIORITY NA	

DESIGN NUMBER	261567
CLASS	23-01
1)MANISHKUMAR JAGDISHCHANDRA SHAH AN INDIAN NATIONAL SOLE PROPRIETOR OF GOPI PLASTIC AN INDIAN PROPRIETORSHIP FIRM HAVING ITS PRINCIPAL PLACE OF BUSINESS AT 18, RAJKUMAR INDUSTRIAL ESTATE, ‘‘NIRALA HOUSE’‘□, OPP. MINAXI PARK SOCIETY, NEAR GAYATRI MANDIR, AMRAIWADI HIGHWAY, AHMEDABAD-380026, GUJARAT-INDIA	
DATE OF REGISTRATION	07/04/2014
TITLE	WATER STRAINER
PRIORITY NA	

DESIGN NUMBER	267109
CLASS	05-05
1)PARRY MURRAY & CO. LTD., COMPANY REGISTERED UNDER THE LAWS OF ENGLAND AND WALES, HAVING ITS PRINCIPAL PLACE OF BUSINESS AT 3RD FLOOR, SIMPSON HOUSE, 6 CHERRY ORCHARD ROAD, CROYDON, CRO 6BA, UNITED KINGDOM	
DATE OF REGISTRATION	30/10/2014
TITLE	TEXTILE FABRIC
PRIORITY NA	

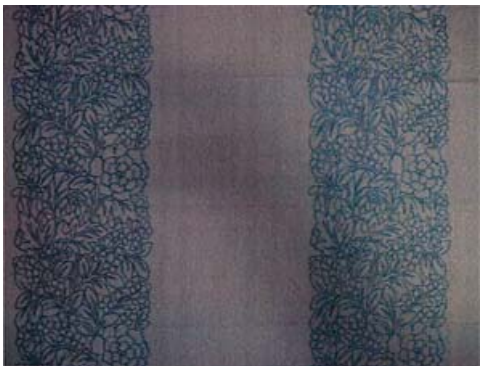

DESIGN NUMBER	265854
CLASS	15-05

1)SAMSUNG ELECTRONICS CO., LTD.
129, SAMSUNG-RO, YEONGTONG-GU, SUWON-SI, GYEONGGI-DO, 443-742, REPUBLIC OF KOREA, A COMPANY OF REPUBLIC OF KOREA

DATE OF REGISTRATION	22/09/2014
TITLE	WASHING MACHINE

PRIORITY NA

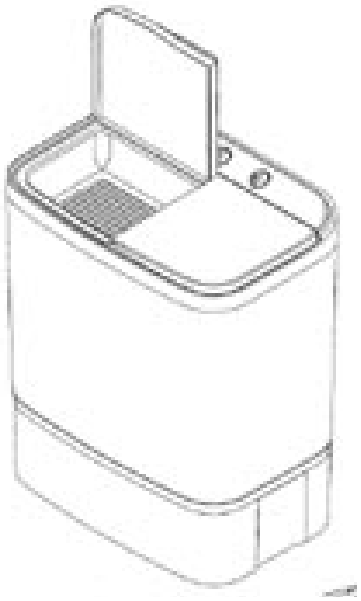

DESIGN NUMBER	264720
CLASS	15-02

1)BITZER KUEHLMASCHINENBAU GMBH, A LIMITED LIABILITY COMPANY INCORPORATED UNDER THE LAWS OF GERMANY, OF THE ADDRESS
ESCHENBRUENNLESTR. 15, SINDELFINGEN, 71065 GERMANY

DATE OF REGISTRATION	12/08/2014
TITLE	COMPRESSOR

PRIORITY

PRIORITY NUMBER	DATE	COUNTRY
002423269-0006	12/03/2014	OHIM

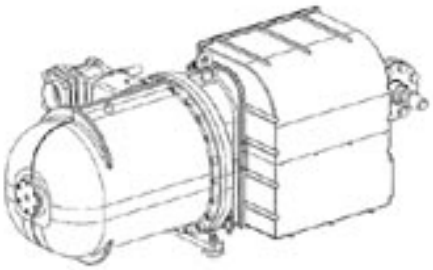

DESIGN NUMBER	264372
CLASS	30-03

1)UDIT AGARWAL, AN INDIAN CITIZEN,
C/O GANGA SANITARY STORE, STATION ROAD, MORADABAD-244001, UP, INDIA

DATE OF REGISTRATION	30/07/2014
TITLE	RACK FOR FEEDING ANIMALS

PRIORITY NA

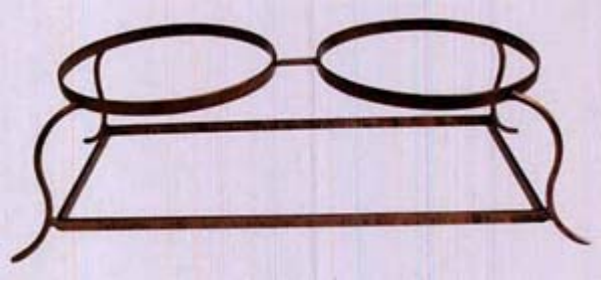

DESIGN NUMBER	264104
CLASS	13-03
1)ABB TECHNOLOGY LTD, A SWISS COMPANY OF AFFOLTERNSTRASSE 44, 8050 ZURICH, SWITZERLAND	
DATE OF REGISTRATION	17/07/2014
TITLE	FUSE SWITCH DISCONNECTOR WITH BUSBAR SYSTEM

PRIORITY

PRIORITY NUMBER	DATE	COUNTRY
002386508-0001	17/01/2014	OHIM

DESIGN NUMBER	267495
CLASS	12-15
1)SUMITOMO RUBBER INDUSTRIES, LTD. A COMPANY ORGANIZED UNDER THE LAWS OF JAPAN OF THE ADDRESS: 6-9, WAKINOHAMA-CHO 3-CHOME, CHUO-KU, KOBE-SHI, HYOGO 651-0072, JAPAN	
DATE OF REGISTRATION	18/11/2014
TITLE	TIRE FOR AUTOMOBILE
PRIORITY NA	

DESIGN NUMBER	264018
CLASS	15-06
1)SANTONI S.P.A., VIA CARLO FENZI, 14, 25135 BRESCIA, ITALY, NATIONALITY: ITALY	
DATE OF REGISTRATION	14/07/2014
TITLE	DEVICE FOR A DIAL GROUP OF A KNITTING MACHINE

PRIORITY

PRIORITY NUMBER	DATE	COUNTRY
BS2014O000002	15/01/2014	ITALY

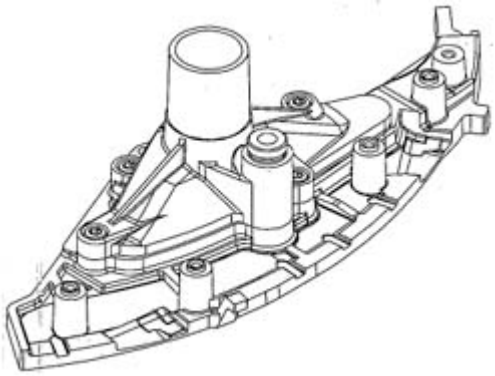

DESIGN NUMBER	265168
CLASS	08-06
1)ABDUL MALIK KHAN AN INDIAN NATIONAL, TRADING AS M/S. D.M.K. ALUMINIUM INDUSTRIES, 12/165, BANI ISRAILAN, GALI DOLI WALI, UPPERFORT, ALIGARH-202001, U.P.	
DATE OF REGISTRATION	27/08/2014
TITLE	LATCH (SET)
PRIORITY NA	

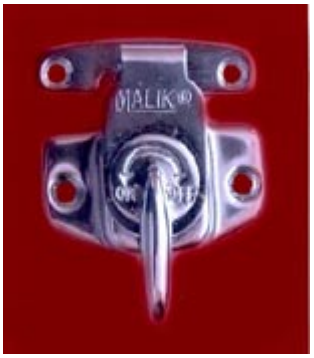

DESIGN NUMBER	267195
CLASS	07-04
1)MR. MIKDAR NISARALI RATLAMWALA AND MR. AMMAR MIKDAR RATLAMWALA AN INDIAN INHABITANTS TRADING AS M/S. BOMBAY TEA STRAINERS MANUFACTURING, A PARTNERSHIP FIRM HAVING OUR OFFICE AT 17-B LAST LANE, SITAFAL WADI, MAZGAON, MUMBAI-400010, MAHARASHTRA, INDIA	
DATE OF REGISTRATION	03/11/2014
TITLE	TEA STRAINER
PRIORITY NA	

DESIGN NUMBER	264829
CLASS	24-04
1)GLENMARK PHARMACEUTICALS LIMITED, AN INDIAN COMPANY REGISTERED UNDER THE COMPANIES ACT, 1956, AND HAVING ITS OFFICE AT GLENMARK HOUSE, HDO - CORPORATE BLDG, WING A, B. D. SAWANT MARG, CHAKALA, ANDHERI (EAST), MUMBAI – 400 099, STATE OF MAHARASHTRA, INDIA	
DATE OF REGISTRATION	18/08/2014
TITLE	INHALER
PRIORITY NA	

DESIGN NUMBER	264019
CLASS	15-06
1)SANTONI S.P.A., VIA CARLO FENZI, 14, 25135 BRESCIA, ITALY, NATIONALITY: ITALY	
DATE OF REGISTRATION	14/07/2014
TITLE	DEVICE FOR FEEDING THREAD TO NEEDLES OF A KNITTING MACHINE

PRIORITY

PRIORITY NUMBER	DATE	COUNTRY
BS2014O000002	15/01/2014	ITALY

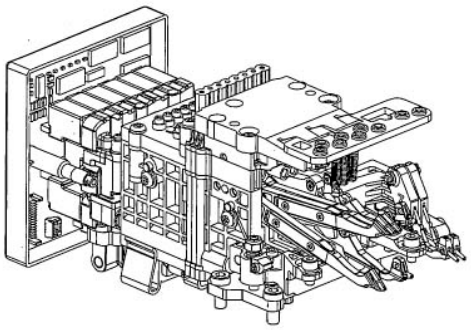

DESIGN NUMBER	267271
CLASS	31-00
1)PREETHI KITCHEN APPLIANCES PRIVATE LIMITED, AN INDIAN COMPANY INCORPORATED UNDER THE PROVISIONS OF THE COMPANIES ACT, 1956, OF TECHNOPOLIS KNOWLEDGE PARK, MAHAKALI CAVES ROAD, CHAKALA, ANDHERI-EAST, MUMBAI-400093, INDIA	
DATE OF REGISTRATION	07/11/2014
TITLE	TABLE TOP GRINDER
PRIORITY NA	

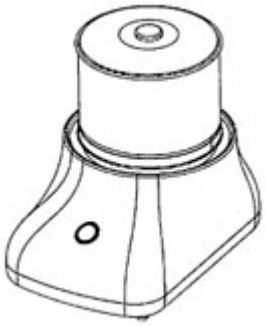

DESIGN NUMBER	265346
CLASS	05-05
1)JADE ESERVICES PRIVATE LIMITED HAVING ADDRESS AS PLOT NO. 103, UDYOG VIHAR, PHASE-I, GURGAON-122 016, HARYANA, INDIA	
DATE OF REGISTRATION	02/09/2014
TITLE	TEXTILE FABRIC
PRIORITY NA	

DESIGN NUMBER	267101
CLASS	05-05

1)PARRY MURRAY & CO. LTD., COMPANY REGISTERED UNDER THE LAWS OF ENGLAND AND WALES, HAVING ITS PRINCIPAL PLACE OF BUSINESS AT
3RD FLOOR, SIMPSON HOUSE, 6 CHERRY ORCHARD ROAD, CROYDON, CRO 6BA, UNITED KINGDOM

DATE OF REGISTRATION	30/10/2014
TITLE	TEXTILE FABRIC

PRIORITY NA

DESIGN NUMBER	265786
CLASS	14-03

1)VIVO MOBILE COMMUNICATION CO., LTD, A COMPANY INCORPORATED UNDER THE LAWS OF CHINA NATIONALITY: CHINA, ADDRESS AT
#283, BBK ROAD, WUSHA, CHANG'AN, DONGGUAN CITY GUANGDONG, CHINA.

DATE OF REGISTRATION	22/09/2014
TITLE	MOBILE PHONE

PRIORITY

PRIORITY NUMBER	DATE	COUNTRY
201430113814.7	30/04/2014	CHINA

DESIGN NUMBER	264905
CLASS	06-01

1)JC BAMFORD EXCAVATORS LIMITED, A BRITISH COMPANY, OF
LAKESIDE WORKS, ROCESTER, UTTOXETER, STAFFORDSHIRE ST14 5JP, UNITED KINGDOM

DATE OF REGISTRATION	20/08/2014
TITLE	VEHICLE SEAT

PRIORITY

PRIORITY NUMBER	DATE	COUNTRY
001405203	28/02/2014	OHIM

DESIGN NUMBER	264094	
CLASS	05-05	
1)EICHER GOODEARTH PRIVATE LIMITED, AT 3RD FLOOR, SELECT CITY WALK MALL, A-3, DISTRICT CENTRE, SAKET, NEW DELHI-110017, AN INDIAN COMPANY		
DATE OF REGISTRATION	17/07/2014	
TITLE	TEXTILE FABRIC	
PRIORITY NA		

DESIGN NUMBER	267902	
CLASS	06-01	
1)NATIONAL INSTITUTE OF DESIGN LOCATED AT PALDI, AHMEDABAD-380007, GUJARAT, HAVING NATIONALITY AS INDIAN		
DATE OF REGISTRATION	04/12/2014	
TITLE	STOOL	
PRIORITY NA		

DESIGN NUMBER	267347	
CLASS	23-04	
1)CROMPTON GREAVES LIMITED, CG HOUSE, 6TH FLOOR, DR. ANNIE BESANT ROAD, WORLI, MUMBAI - 400030, MAHARASHTRA, INDIA; AN INDIAN COMPANY		
DATE OF REGISTRATION	12/11/2014	
TITLE	WALL FAN	
PRIORITY NA		