पेटेंट कार्यालय
शासकीय जर्नल

OFFICIAL JOURNAL
OF
THE PATENT OFFICE

निर्गमन सं. 16/2015	शुक्रवार	दिनांक: 17/04/2015
ISSUE NO. 16/2015	FRIDAY	DATE: 17/04/2015

पेटेंट कार्यालय का एक प्रकाशन

PUBLICATION OF THE PATENT OFFICE

INTRODUCTION

In view of the recent amendment made in the Patents Act, 1970 by the Patents (Amendment) Act, 2005 effective from 01st January 2005, the Official Journal of The Patent Office is required to be published under the Statute. This Journal is being published on weekly basis on every Friday covering the various proceedings on Patents as required according to the provision of Section 145 of the Patents Act 1970. All the enquiries on this Official Journal and other information as required by the public should be addressed to the Controller General of Patents, Designs & Trade Marks. Suggestions and comments are requested from all quarters so that the content can be enriched.

(Rajiv Aggarwal)
CONTROLLER GENERAL OF PATENTS, DESIGNS & TRADE MARKS

17TH APRIL, 2015

CONTENTS

THE PATENT OFFICE
KOLKATA, 17/04/2015
Address of the Patent Offices/Jurisdictions
The following are addresses of all the Patent Offices located at different places having their Territorial Jurisdiction on a Zonal basis as shown below:-

1	Office of the Controller General of Patents, Designs & Trade Marks, Boudhik Sampada Bhavan, Near Antop Hill Post Office,S.M.Road,Antop Hill, Mumbai – 400 037 Phone: (91)(22) 24123311, Fax : (91)(22) 24123322 E-mail: cgpdtm@nic.in	4	The Patent Office, Government of India, Intellectual Property Rights Building, G.S.T. Road, Guindy, Chennai – 600 032. Phone: (91)(44) 2250 2081-84 Fax : (91)(44) 2250 2066 E-mail: chennai-patent@nic.in ❖ The States of Andhra Pradesh, Telangana, Karnataka, Kerala, Tamil Nadu and the Union Territories of Puducherry and Lakshadweep.
2	The Patent Office, Government of India, Boudhik Sampada Bhavan, Near Antop Hill Post Office,S.M.Road,Antop Hill, Mumbai – 400 037 Phone: (91)(22) 24137701 Fax: (91)(22) 24130387 E-mail: mumbai-patent@nic.in ❖ The States of Gujarat, Maharashtra, Madhya Pradesh, Goa and Chhattisgarh and the Union Territories of Daman and Diu & Dadra and Nagar Haveli	5	The Patent Office (Head Office), Government of India, Boudhik Sampada Bhavan, CP-2, Sector –V, Salt Lake City, Kolkata- 700 091 Phone: (91)(33) 2367 1943/44/45/46/87 Fax: (91)(33) 2367 1988 E-Mail: kolkata-patent@nic.in ❖ Rest of India
3	The Patent Office, Government of India, Boudhik Sampada Bhavan, Plot No. 32., Sector-14, Dwarka, New Delhi – 110075 Phone: (91)(11) 2808 1921 – 25 Fax: (91)(11) 2808 1920 & 2808 1940 E.mail: delhi-patent@nic.in ❖ The States of Haryana, Himachal Pradesh, Jammu and Kashmir, Punjab, Rajasthan, Uttar Pradesh, Uttaranchal, Delhi and the Union Territory of Chandigarh.		

Website: www.ipindia.nic.in
www.patentoffice.nic.in

All applications, notices, statements or other documents or any fees required by the Patents Act, 1970 and The Patents (Amendment) Act, 2005 or by the Patents (Amendment) Rules, 2006 will be received only at the appropriate offices of the Patent Office.

Fees: The Fees may either be paid in cash or may be sent by Bank Draft or Cheques payable to the Controller of Patents drawn on a scheduled Bank at the place where the appropriate office is situated.

पेटेंट कार्यालय

कोलकाता, दिनांक 17/04/2015

कार्यालयों के क्षेत्राधिकार के पते

विभिन्न जगहों पर स्थित पेटेंट कार्यालय के पते आंचलिक आधार पर दर्शित उनके प्रादेशिक अधिकार क्षेत्र के साथ नीचे दिए गए है:-

1	कार्यालय : महानियंत्रक, एकस्व, अभिकल्प तथा व्यापार चिह्न, एंटोप हिल डाकघर के समीप, एस. एम. रोड, एंटोप हिल, मुम्बई- 400 037, भारत, फोन: (91) (22) 24123311 फ़ैक्स: (91) (22) 24123322 ई. मेल: cgpdtm@nic.in	4	पेटेंट कार्यालय, भारत सरकार इंटेलेक्चुअल प्रॉपर्टी राइट्स बिल्डिंग, इंडस्ट्रियल इस्टेट एसआईडीसीओ आरएमडी गोडाउन एरिया एडजसेन्ट टु ईगल फ्लास्क, जी. एस. टी. रोड, गायन्डी चेन्नई - 600 032. फोन: (91)(44) 2250 2081-84 फ़ैक्स: (91)(44) 2250-2066 ई. मेल: chennai-patent@nic.in ❖ आन्ध्र प्रदेश, तेलंगाना, कर्नाटक, केरल, तमिलनाडु तथा पुडुचेरी राज्य क्षेत्र एवं संघ शासित क्षेत्र, लक्षदीप
2	पेटेंट कार्यालय, भारत सरकार बौद्धिक संपदा भवन, एंटोप हिल डाकघर के समीप, एस. एम. रोड, एंटोप हिल, मुम्बई- 400 037, फोन: (91) (22) 24137701 फ़ैक्स: (91) (22) 24130387 ई. मेल: Mumbai-patent@nic.in ❖ गुजरात, महाराष्ट्र, मध्य प्रदेश, गोवा तथा छत्तीसगढ़ राज्य क्षेत्र एवं संघ शासित क्षेत्र, दमन तथा दीव, दादर और नगर हवेली.	5	पेटेंट कार्यालय, भारत सरकार कोलकाता, (प्रधान कार्यालय) बौद्धिक संपदा भवन, सीपी-2, सेक्टर- V, साल्ट लेक सिटी, कोलकाता-700 091, भारत. फोन: (91)(33) 2367 1943/44/45/46/87 फ़ैक्स:/Fax: (91)(33) 2367 1988 ई. मेल: kolkata-patent@nic.in ❖ भारत का अवशेष क्षेत्र
3	पेटेंट कार्यालय, भारत सरकार बौद्धिक संपदा भवन, प्लॉट सं. 32, सेक्टर- 14, द्वारका, नई दिल्ली- 110 075. फोन: (91)(11) 2808 1921-25 फ़ैक्स: (91)(11) 2808 1920, 2808 1940 ई. मेल: delhi-patent@nic.in हरियाणा, हिमाचल प्रदेश, जम्मू तथा कश्मीर, पंजाब,राजस्थान, उत्तर प्रदेश, दिल्ली तथा उत्तरांचल राज्य क्षेत्रों, एवं संघ शासित क्षेत्र चंडीगढ़		

वेबसाइट: http://www.ipindia.nic.in

www.patentoffice.nic.in

पेटेंट अधिनियम, 1970 तथा पेटेंट (संशोधन) अधिनियम, 2005 अथवा पेटेंट (संशोधन) नियम, 2006 द्वारा वांछित सभी आवेदन, सूचनाए, विवरण या अन्य दस्तावेज़ या कोई शुल्क पेटेंट कार्यालय के केवल उपयुक्त कार्यालय में स्वीकृत होंगे।

शुल्क: शुल्क या तो नगद रूप में या Controller of Patents के नाम में देय बैंक ड्राफ्ट या चेक के द्वारा भेजी जा सकती है जो उसी स्थान के किसी अनुसूचित बैंक में प्रदत्त हो जहाँ उपयुक्त कार्यालय स्थित है ।

SPECIAL NOTICE

18 Months publication as required under Section 11A of the Patents Act, 1970 as amended by the Patents (Amendment) Act, 2005.

Notice is hereby given that any person at any time before the grant of Patent may give representation by way of opposition to the Controller of Patents at appropriate office on the ground and in a manner specified under section 25(1) of the Patents (Amendment) Act, 2005 read with Rule 55 of the Patents (Amendment) Rules, 2006.

Notice is also given that if any interested person requests for copies of the complete specification, drawing and abstract of any application already published, the photocopy of the same can be supplied by the Patent Office as per the jurisdiction on payment of prescribed fees of Rs.8/- per page. If any further details are required to be obtained, the same can be provided by the respective Patent Offices on request.

(Rajiv Aggarwal)
CONTROLLER GENERAL OF PATENTS, DESIGNS & TRADE MARKS

SPECIAL NOTICE

Under the new provision of the Patents Act, 1970 as amended by the Patents (Amendment) Act, 2005 and Rules there under, Publication of the matter relating to Patents in the Official Gazette of India Part III, Section 2 has been discontinued and instead The Official Journal of the Patent Office is being published containing all the activities of The Patent Office such as publication of all the patent applications after 18th months , grant of patents & all other information in respect of the proceedings as required under the provisions of the Patents (Amendment) Act, 2005 and Rules thereunder on weekly basis on every **Friday**.

The Journal is uploaded in the website every Friday. So Paper form and CD-ROM form of the Journal are discontinued from 01/01/2009.

SPECIAL NOTICE

Every effort is being taken to publish all the patent applications under section 11(A) of the Patents Act. However, if duplication of publication of any application is found, then earlier date of publication will be taken for the purpose of provisional protection for applicant and Patent Office will grant Patent not before six months from the date of second publication, provided that there is there is no third party representation.

Early Publication:

The following patent applications have been published under section 11A (2) of The Patents (Amendment) Act 2005 and rule 24A of The Patents (Amendment) Rules, 2006. Any person may file representation by way of opposition to the Controller of Patents at the appropriate office against the grant of the patent in the prescribed manner under section 25(1) of the Patents (Amendment) Act 2005 read with the rule 55 of The Patents (Amendment) Rules, 2006:

(12) PATENT APPLICATION PUBLICATION
(21) Application No.2909/DEL/2014 A
(19) INDIA
(22) Date of filing of Application :12/10/2014
(43) Publication Date : 17/04/2015

(54) Title of the invention : Motorized anti-friction linear guide slide valve (MALGSV)

(51) International classification	:F25B 49/00	(71)**Name of Applicant :**
(31) Priority Document No	:NA	**1)Pradeep Kumar**
(32) Priority Date	:NA	Address of Applicant :S/o Krishan Kumar V.P.O.- Bahia, Tehsil-Rania, District-Sirsa, Haryana (125075) India Haryana India
(33) Name of priority country	:NA	**2)Prof. (Dr.) Pankaj Chandna**
(86) International Application No	:PCT//	(72)**Name of Inventor :**
Filing Date	:01/01/1900	**1)Pradeep Kumar**
(87) International Publication No	: NA	**2)Prof. (Dr.) Pankaj Chandna**
(61) Patent of Addition to Application Number	:NA	
Filing Date	:NA	
(62) Divisional to Application Number	:NA	
Filing Date	:NA	

(57) Abstract :
An object of the present invention is to provide a slide gate valve comprising: a motor for moving a slider gate which moves across a valve opening; a slider gate accommodated between the valve casing; a slider driver arranged on edges of the slider gate; a linear guide along each edges of valve casing; a seal provided along with each edges of the casing; a seal carrier arranged along with each seal towards the inner side of the casing; wherein the slider driver are connected with the linear guides to move along the edges of the valve casing along with directions of linear guide; and wherein the slider gate slides over the seal.

No. of Pages : 19 No. of Claims : 12

(12) PATENT APPLICATION PUBLICATION
(19) INDIA
(22) Date of filing of Application :27/10/2014
(21) Application No.5325/CHE/2014 A
(43) Publication Date : 17/04/2015

(54) Title of the invention : FLOATING OCEAN WAVE ENERGY CONVERTER

(51) International classification :F03B
(31) Priority Document No :NA
(32) Priority Date :NA
(33) Name of priority country :NA
(86) International Application No :NA
Filing Date :NA
(87) International Publication No : NA
(61) Patent of Addition to Application Number :NA
Filing Date :NA
(62) Divisional to Application Number :NA
Filing Date :NA

(71)**Name of Applicant :**
1)JITHIN C C
Address of Applicant :CHERIYACHALIL (HO), THIRUVALLUR PO, VADAKARA, KOZHIKODE - 673 541 Kerala India
(72)**Name of Inventor :**
1)JITHIN C C

(57) Abstract :
Floating ocean wave energy converter for converting wave energy into electrical energy is disclosed. Said converter comprises of a platform built on hollow beams erected in sea wherein said beams are anchored to the sea bottom by means of concrete blocks (4), and one or more direct reciprocating generators are mounted on said platform wherein the reciprocating shaft of generators is connected to floating buoy (3) by hollow steel tubes.

No. of Pages : 22 No. of Claims : 7

(12) PATENT APPLICATION PUBLICATION
(19) INDIA
(22) Date of filing of Application :06/04/2015
(21) Application No.1799/CHE/2015 A
(43) Publication Date : 17/04/2015

(54) Title of the invention : EFFECTIVE METHOD OF EXTRACTION AND SEPARATION OF ANTIOXIDANT MOLECULES FROM LICHENS OBTAINED FROM KOLLI HILLS OF TAMIL NADU

(51) International classification :A61K36/00
(31) Priority Document No :NA
(32) Priority Date :NA
(33) Name of priority country :NA
(86) International Application No :NA
Filing Date :NA
(87) International Publication No : NA
(61) Patent of Addition to Application Number :NA
Filing Date :NA
(62) Divisional to Application Number :NA
Filing Date :NA

(71)**Name of Applicant :**
1)MR. P. DEEPAK KUMAR
Address of Applicant :DEPARTMENT OF BIOTECHNOLOGY, K.S.RANGASAMY COLLEGE OF TECHNOLOGY, TIRUCHENGODE Tamil Nadu India
2)MR. B. MAHENDRA KUMAR
3)MR. G. AYYAPPADASAN
4)DR. P. PONMURUGAN
(72)**Name of Inventor :**
1)MR. P. DEEPAK KUMAR
2)MR. B. MAHENDRA KUMAR
3)MR. G. AYYAPPADASAN
4)DR. P. PONMURUGAN

(57) Abstract :
Lichens are made by symbiotic association of both fung and algae. The fungi vvas found to be the major partner and ¡n the metabolite production too. The lichen metabolites were found to be very iinique compared with the other plant kingdom. Most of the lichen compounds were observed as very good antioxidants for capturing the free radic¡is. Keep in this mind, present invention deals about the novel approaches for extraction and separation of antioxidant molecules from various lichen species. Macrolichen species were collected from different altitudes from the Eastern Ghats covering kolli hills of Tamil Nadu. The collected samples were stored at -80°C for further use. lt was subjected to extract the antioxidant compounds by keeping the fresh thalli at 62 - 65° C for about 10 minutes. Then lichen thallus was shade dried for 2-3 days under room temperature. Fine powder vvas obtained by using a mixed grinder with 250 RPM for 15minutes. An equal.proportion of ethyl actate and methanol vvas added to the powder for the liquid- liquid extraction. Aqueous top layer vvas treated with IN NaOH and then the soution was acidified to pH 2.5 by using IN HCI. Centrifuge the sample and discards the pellet. Supernatant was transferred into dialysis process for 72 hrs. Then the sample was air dried and analyzed for their antioxidant potential. Concentrated sample vvas spotted on the TLC pate and active constitutes were observed as different colourin TLC pate. TLC pate showed that number of spots were reduced which interns helps to purify the antioxidant molecule very easily. Further HPLC analysis was contlrmed the separation of antioxidant compounds in an effective way by obtaining various peaks.

No. of Pages : 9 No. of Claims : 5

(12) PATENT APPLICATION PUBLICATION
(19) INDIA
(22) Date of filing of Application :26/12/2014
(21) Application No.6583/CHE/2014 A
(43) Publication Date : 17/04/2015

(54) Title of the invention : THERMO-WIND ELECTRICITY

(51) International classification :H01M
(31) Priority Document No :NA
(32) Priority Date :NA
(33) Name of priority country :NA
(86) International Application No :NA
Filing Date :NA
(87) International Publication No : NA
(61) Patent of Addition to Application Number :NA
Filing Date :NA
(62) Divisional to Application Number :NA
Filing Date :NA

(71)**Name of Applicant :**
1)V. HARI PRASATH
Address of Applicant :33A, VIJAYARANGAN STREET, SAIDAPET,ARNI,632301, T.V.MALAI DT Tamil Nadu India
(72)**Name of Inventor :**
1)V. HARI PRASATH

(57) Abstract :
We now have an easy and profitable method to generate electricity. The only thing we have to do is, perform this project and make it come into action. If this succeeds, the problems regarding electricity production will be minimized. One day, India will be an electricity problem free country. After all we can save thousands and thousands of crores annually.

No. of Pages : 19 No. of Claims : 6

(12) PATENT APPLICATION PUBLICATION
(19) INDIA
(22) Date of filing of Application :19/03/2015
(21) Application No.1363/CHE/2015 A
(43) Publication Date : 17/04/2015

(54) Title of the invention : SWIRL GENERATOR MANIFOLD

(51) International classification :F28F
(31) Priority Document No :NA
(32) Priority Date :NA
(33) Name of priority country :NA
(86) International Application No :NA
Filing Date :NA
(87) International Publication No : NA
(61) Patent of Addition to Application Number :NA
Filing Date :NA
(62) Divisional to Application Number :NA
Filing Date :NA

(71)**Name of Applicant :**
1)G. SANKARAARAYANAN
Address of Applicant :KURINJI KUDIL, PLOT 2, VIMALA NAGAR, ASHTALAKSHMI AVENUE, PALLIKARANAI, CHENNAI - 600100 Tamil Nadu India
2)SHANMUGASUNDARAM ANANDAN
(72)**Name of Inventor :**
1)G. SANKARAARAYANAN
2)SHANMUGASUNDARAM ANANDAN

(57) Abstract :
The present invention concerns a tubular header manifold for heat exchangers with a generally L-shaped manifold segment having a number of strips parallel to the manifold axis and separated by pre-determined angle. A manifold segment with a number of helical copper strips forms the end chamber of a manifold for a heat exchanger and.for inducing the induction swirl to the air. The strips are designed to accept flat copper thin strips brazed at the circumference of the manifold with 120 degree angular spacing between each of the strips of the manifolds, and are designed in particular to serve as an induction swirl generator in the air entering the open combustion chamber of the CI engine. As a result of their intended length in relation to the diameter of the manifold, the ends of the strips in the manifold have an angle of preferably to 120° spacer in between the said strips on both sides of the strip centerline. The strips are designed with edges brazed to the manifold outlet inner circumference inside of the manifold. The three long edges of each strip are folded parallel to the manifold axis to form flat surfaces that make good helical twist with the flat thin copper strips which are brazed at the inner surface. The helically folded copper strips provide the advantages of swirl induction in the air entering the combustion chamber resulting in the efficient air-fuel combustion, dissipates the excess heat from the manifold surface to the atmospheric air entering the chamber resulting in pre-heating the air, provides high inducted thermal efficiency and minimal NoX.

No. of Pages : 19 No. of Claims : 10

(12) PATENT APPLICATION PUBLICATION
(19) INDIA
(22) Date of filing of Application :06/04/2015
(21) Application No.1800/CHE/2015 A
(43) Publication Date : 17/04/2015

(54) Title of the invention : SEMI HYBRID ENERGY EFFICIENT I.C. ENGINE E & M

(51) International classification :F02B
(31) Priority Document No :NA
(32) Priority Date :NA
(33) Name of priority country :NA
(86) International Application No :NA
Filing Date :NA
(87) International Publication No : NA
(61) Patent of Addition to Application Number :NA
Filing Date :NA
(62) Divisional to Application Number :NA
Filing Date :NA

(71)**Name of Applicant :**
1)P. RADHAKRISHNAN
Address of Applicant :M2/D, ANUGRAHA COLONY, 3RD AVENUE, ASHOK NAGAR, CHENNAI-600083 Tamil Nadu India
(72)**Name of Inventor :**
1)P. RADHAKRISHNAN

(57) Abstract :
I claim a Semi Hybrid Energy Efficient I.C.‰ngine E & M - Electrica ¡nd f±echanical, (Conventional or FDCRT), run on petrol, diesel, gas or any ³thr fossil fuels and rotating a crankshaft with the crankpins or crank discs placed i± a circular path at regular intervals to each other at 45°, 60°, 72°, 90°, 120°, 180° etc., longitudinally to the crankshafts main axis and according to the config¼ration of cylinders in In-line, H, Vee, or Rotary formations etc., and having dynamic balancing weights, sep¡rate counter weights and torsi³n vibration dampers etc., and in case of single cylinder engines balancing wheels on eithr side of the crank shaft or on one side depending upon its design, can produce electrica energy additionally for use, thus improving the thermal efficiency, by redesigning the crankshaft along with cylinder block, cylinder head, crankcase and also by the propelling shaft and rail traction axles etc., with alternators in place of counter weights, torsi³n vibration dampers etc.,

No. of Pages : 22 No. of Claims : 1

(12) PATENT APPLICATION PUBLICATION
(19) INDIA
(22) Date of filing of Application :24/02/2015
(21) Application No.203/KOL/2015 A
(43) Publication Date : 17/04/2015

(54) Title of the invention : SPECIAL DESIGNED VISUAL--AID FOR PRESBYOPES SOLVING BIFOCAL SPECTACLE INDUCED WALKING PROBLEM

(51) International classification	:A61F2/16	(71)**Name of Applicant :**
(31) Priority Document No	:NA	**1)SUBHABRATA PAHARI**
(32) Priority Date	:NA	Address of Applicant :SUBHABRATA PAHARI VILL-KAMARDA, PO-KAMARDA BAZAR, P.S KHEJURI, DIST-PURBA MEDINIPUR, PIN. 721432 W.B. India
(33) Name of priority country	:NA	
(86) International Application No	:NA	
Filing Date	:NA	(72)**Name of Inventor :**
(87) International Publication No	: NA	**1)SUBHABRATA PAHARI**
(61) Patent of Addition to Application Number	:NA	
Filing Date	:NA	
(62) Divisional to Application Number	:NA	
Filing Date	:NA	

(57) Abstract :
Special designed visual aid for prebyopes solving bifocal spectacle induced walking problem comprises a special type of spectacle where extra lenses are used as per need of a presbyope through an improved mechanical means where proper dispensing methods are followed. A person wearing bifocal spectacle feels blurring of vision near the foot which causes problem in smooth walking. This is due to the additional power for near vision. To solve this problem, a separate piece of rimless lens having the additional power for near vision is placed just in front and inferonasal portion of each of the lens for distant vision of a spectacle by a mechanical means, revealing no unwanted prismatic effect, when doing near work. So a person can see both distant and near objects clearly with the visual aid, like conventional bifocal. Then each of the said separate pieces of rimless lens is swiveled from its position to another position by the said mechanical means where it does not causes visual problem when walking. So the person uses only the lens for distant vision in the time of walking without problem.

No. of Pages : 24 No. of Claims : 20

(12) PATENT APPLICATION PUBLICATION
(19) INDIA
(22) Date of filing of Application :27/02/2015
(21) Application No.214/KOL/2015 A
(43) Publication Date : 17/04/2015

(54) Title of the invention : VIBRO GRIZZLY MECHANIZED LUMP BREAKING MACHINE.

(51) International classification	:G07D9/00	(71)**Name of Applicant :**
(31) Priority Document No	:NA	**1)DIPYENDU MONDAL**
(32) Priority Date	:NA	Address of Applicant :PROJECT MANAGER OF S & T MINING COMPANY PRIVATE LIMITED 1ST FLOOR, TATA CENTER 43, JAWAHARLAL NEHERU ROAD, KOLKATA-700071, INDIA
(33) Name of priority country	:NA	
(86) International Application No	:NA	
Filing Date	:NA	
(87) International Publication No	: NA	(72)**Name of Inventor :**
(61) Patent of Addition to Application Number	:NA	**1)DIPYENDU MONDAL**
Filing Date	:NA	
(62) Divisional to Application Number	:NA	
Filing Date	:NA	

(57) Abstract :
This invention discloses a vibro grizzly mechanized lump breaking machine (M). The machine (M) comprising a grizzly (6) disposed in the machine to receive the raw material of the run of mine. A data acquisition system initiates signal to PLC for four numbers of motors (9) disposed at end of grizzly in longitudinal direction to start where two motors rotate in clockwise direction and two in anti-clockwise direction where the said motors being assembled with counter weight rotates in opposite direction making grizzly start shaking in longitudinal direction causing the raw material size less than the aperture of the grizzly (6) to pass through when oversize material is arrested wherein at the end of the process vibro motors (9) are stopped and the lump breaker roller (13) is automatically started and rotates over grizzly (6) in forward- reverse direction through digital programming with the help of friction lagging (14) and breaks down the run of mine over the grizzly in support of breaking plate (12) as well as grizzly (6), making the lumps suitable for passing through the aperture of grizzly.

No. of Pages : 19 No. of Claims : 4

(12) PATENT APPLICATION PUBLICATION
(19) INDIA
(22) Date of filing of Application :10/03/2015
(21) Application No.255/KOL/2015 A
(43) Publication Date : 17/04/2015

(54) Title of the invention : A TIME WARP AND FREE ENERGY MACHINE

(51) International classification :D04B23/00
(31) Priority Document No :NA
(32) Priority Date :NA
(33) Name of priority country :NA
(86) International Application No :NA
Filing Date :NA
(87) International Publication No : NA
(61) Patent of Addition to Application Number :NA
Filing Date :NA
(62) Divisional to Application Number :NA
Filing Date :NA

(71)**Name of Applicant :**
1)BARUAH GAUTAM NARAYAN
Address of Applicant :C/O J.N.BARUAH NEMATI.ROAD, BORIGAON, JORHAT-785001, ASSAM, INDIA
(72)**Name of Inventor :**
1)BARUAH GAUTAM NARAYAN

(57) Abstract :
If we place 1kg object in water it must displace 1 kg ofwater before submerging to remain afloat. The invention enables construction of a plane solid surface where an object tends to have part of its weight not supported even at the position of rest. Then according to the law of conservation of energy the object sinks in the time dimension and mathematically gets length contracted to support its weight.

No. of Pages : 14 No. of Claims : 3

(12) PATENT APPLICATION PUBLICATION
(19) INDIA
(22) Date of filing of Application :09/03/2015
(21) Application No.249/KOL/2015 A
(43) Publication Date : 17/04/2015

(54) Title of the invention : A PROCESS FOR PREPARING ANIMAL CHONCAL CARTILAGE FOR TRANSPLANTATION

(51) International classification :A61L27/10
(31) Priority Document No :NA
(32) Priority Date :NA
(33) Name of priority country :NA
(86) International Application No :NA
Filing Date :NA
(87) International Publication No : NA
(61) Patent of Addition to Application Number :NA
Filing Date :NA
(62) Divisional to Application Number :NA
Filing Date :NA

(71)**Name of Applicant :**
1)DR. SAMIT KUMAR NANDI
Address of Applicant :ASSOCIATE PROFESSOR AND FORMER HEAD OF THE DEPARTMENT C/O WEST BENGAL UNIVERSITY OF ANIMAL AND FISHERIES SCIENCES, 37,KSHUDIRAM BOSE SARANI,KOLKATA-700037,WEST BENGAL,INDIA
2)DR. SIDDHARTHA NARAYAN JOARDAR
3)DR. BIKASH KANTI BISWAS
4)MS. PIYALI DAS
5)DR PRADIP KUMAR DAS
6)DR. SUBHASISH BATABYAL
7)DR. RUPNARAYAN BHATTACHARYA
(72)**Name of Inventor :**
1)DR.SAMIT KUMAR NANDI

(57) Abstract :
This invention relates to a process for preparing animal choncal cartilage and in particular, this invention relates to a process for preparing choncal cartilage for surgical implantation in Microtia and Rhinoplasty of human patient. More particularly, this present invention relates to a process for preparing choncal cartilage wherein the cartilage protein was extracted after harvesting and processing of choncal cartilage. Furthermore, this invention also relates to a newly generated article produced by the said process which is high in safety, accurate in shape at the same time, and quite similar to the normal tissue.

No. of Pages : 29 No. of Claims : 7

(12) PATENT APPLICATION PUBLICATION
(19) INDIA
(22) Date of filing of Application :06/10/2009
(21) Application No.1224/KOL/2009 A
(43) Publication Date : 17/04/2015

(54) Title of the invention : ELECTRONIC GUN

(51) International classification	:E05B43/00	(71)**Name of Applicant :**
(31) Priority Document No	:NA	**1)DR. BIRENDRA SHARMA**
(32) Priority Date	:NA	Address of Applicant :DR. BIRENDRA SHARMA,
(33) Name of priority country	:NA	TARWAR, P.O. BHERWANIA, VIA MORA, DIST SIWAN,
(86) International Application No	:NA	BIHAR PIN 841507 India
Filing Date	:NA	(72)**Name of Inventor :**
(87) International Publication No	: NA	**1)DR. BIRENDRA SHARMA**
(61) Patent of Addition to Application Number	:NA	
Filing Date	:NA	
(62) Divisional to Application Number	:NA	
Filing Date	:NA	

(57) Abstract :
This invevtion relates to a misfire free bullet and gun, bullet is idetified before its use. There is a least possibility of firing or misfiring going wrong because is made up of steel, brass, copper, wood and plastic.

No. of Pages : 20 No. of Claims : 6

(12) PATENT APPLICATION PUBLICATION
(19) INDIA
(22) Date of filing of Application :11/03/2015
(21) Application No.268/KOL/2015 A
(43) Publication Date : 17/04/2015

(54) Title of the invention : A NOVEL FORMULATION FOR ANTICANCER DRUG

(51) International classification :A61K31/337
(31) Priority Document No :NA
(32) Priority Date :NA
(33) Name of priority country :NA
(86) International Application No :NA
Filing Date :NA
(87) International Publication No : NA
(61) Patent of Addition to Application Number :NA
Filing Date :NA
(62) Divisional to Application Number :NA
Filing Date :NA

(71)**Name of Applicant :**
1)DR. PRANAB KUMAR DAS
Address of Applicant :PLOT NO. A-8/94, P.O-KALYANI, DIST-NADIA, PIN-741235 INDIA
(72)**Name of Inventor :**
1)DR. PRANAB KUMAR DAS

(57) Abstract :
The present invention relates to a new formulation of a potent anti-cancer drug with active molecules viz. ursolic acid, beta sitosterol and sitosterol-3-O-glucoside.

No. of Pages : 16 No. of Claims : 10

(12) PATENT APPLICATION PUBLICATION
(19) INDIA
(22) Date of filing of Application :25/02/2015
(21) Application No.205/KOL/2015 A
(43) Publication Date : 17/04/2015

(54) Title of the invention : A PLANT SPRAYING MACHINE

(51) International classification :A01M7/00
(31) Priority Document No :NA
(32) Priority Date :NA
(33) Name of priority country :NA
(86) International Application No :NA
Filing Date :NA
(87) International Publication No : NA
(61) Patent of Addition to Application Number :NA
Filing Date :NA
(62) Divisional to Application Number :NA
Filing Date :NA

(71)**Name of Applicant :**
1)PURNA CHANDRA PAL
Address of Applicant :VILL:DAKHIN BELTALA, P.O:NORTH KALAMDAN, THAN:KHAJURI, DIST:EAST MIDNAPUR, PIN:721430, WEST BENGAL,INDIA
(72)**Name of Inventor :**
1)PURNA CHANDRA PAL

(57) Abstract :
This invention relates to a plant spraying machine and in particular, this invention relates to a plant spraying machine work can be easily.performed in a cultivated land, garden, wherein a pre-installed facility is used so that installation cost is not needed to be repeatedly spent thereby reducing operation and maintenance costs. More particularly, this present invention relates to a plant spraying machine which create a pressure on the content and allow it to flow out from another predefine hole. Furthermore, this invention also relates to a plant spraying machine which has the beneficial effects of having, safety and reliability.

No. of Pages : 24 No. of Claims : 10

(12) PATENT APPLICATION PUBLICATION
(19) INDIA
(22) Date of filing of Application :23/03/2015
(21) Application No.305/KOL/2015 A
(43) Publication Date : 17/04/2015

(54) Title of the invention : A PRACTICAL APPROACH FOR COAL FIRE PREVENTION AND ITS PREDICTION INTEGRATING MACHINE LEARNING AND STATISTICS IN OPENCAST MINES WORKING OVER DEVELOPED PILLARS

(51) International classification	:A62C3/06	(71)**Name of Applicant :**
(31) Priority Document No	:NA	**1)SATISH KUMAR SINHA**
(32) Priority Date	:NA	Address of Applicant :INDIAN SCHOOL OF MINES
(33) Name of priority country	:NA	DHANBAD-826 004, JHARKHAND
(86) International Application No	:NA	**2)D.C.PANIGRAHI**
Filing Date	:NA	**3)HAIDER BANKA**
(87) International Publication No	: NA	(72)**Name of Inventor :**
(61) Patent of Addition to Application Number	:NA	**1)SATISH KUMAR SINHA**
Filing Date	:NA	**2)D C PANIGRAHI**
(62) Divisional to Application Number	:NA	**3)HAIDER BANKA**
Filing Date	:NA	

(57) Abstract :
Method of Mining to prevent fire occurrence in opencast mines working over underground coal pillars modeled for better control of fiery situations by its detection, prevention and prediction, comprising: a)Identification of critical mining parameters responsible for fire occurrences such as area of coal face exposure, rate of coal face advance, b)Finding the role of coal intrinsic susceptibility towards fire (represented by crossing point temperature) to be secondary in nature towards occurrence of fire and using critical mining parameters like apparent area and additional area where the component of additional area is far more in magnitude and significance than the apparent area towards occurrence of fire, Formulation and measurements of the identified mining parameters, c)Statistical validation of the measurements (using ANOVA, and Confidence Interval (CI) Analysis), d)Capturing the non-obvious hidden factors within the attributes causing fire and validated by machine learning LMT classifier, e)ApplyinglO fold cross validation method for its further validation to show consistency in performance, f)Prevention and controlling occurrence of fire by proper tuning of the identified mining parameters.

No. of Pages : 27 No. of Claims : 4

(12) PATENT APPLICATION PUBLICATION
(19) INDIA
(22) Date of filing of Application :31/03/2015
(21) Application No.359/KOL/2015 A
(43) Publication Date : 17/04/2015

(54) Title of the invention : UNDER WATER MOBILE ROBOT FOR MONITORING AND EXPLORATION PURPOSE

(51) International classification :G01N33/18
(31) Priority Document No :NA
(32) Priority Date :NA
(33) Name of priority country :NA
(86) International Application No :NA
Filing Date :NA
(87) International Publication No : NA
(61) Patent of Addition to Application Number :NA
Filing Date :NA
(62) Divisional to Application Number :NA
Filing Date :NA

(71)**Name of Applicant :**
1)NATIONAL INSTITUTE OF TECHNOLOGY
Address of Applicant :NATIONAL INSTITUTE OF TECHNOLOGY ROURKELA - 769 008, DIST: SUNDARGARH ODISHA INDIA
(72)**Name of Inventor :**
1)Dr. DAYAL R. PARHI
2)Mrs. SHUBHASRI KUNDU

(57) Abstract :
The present invention is related to the design and development of a low cost underwater mobile robot for operating in shallow water of 25m depth with a maximum translational speed of 1.62 knots (3km/hr.) at water surface level and 1.295 knots (2.4km/hr.) underwater (Forward-backward) and also 0.54 knots (1km/hr.) (Up-down). Rotational speed of 1.57 rad/s at the surface of water and 1.3 rad/s under water have been measured. Moreover controller action is made in such a way to give smooth surge, heave and sway motion. Various components of the robot have been designed to make it compact and light in weight. The waterproofing of electronics and other sensitive elements for a working system is also considered to be crucial. This robot can perform missions such as underwater exploration and also monitoring of aqua lives in shallow water. The navigational controller is automated to provide obstacle avoidance.

No. of Pages : 17 No. of Claims : 8

(12) PATENT APPLICATION PUBLICATION
(19) INDIA
(22) Date of filing of Application :18/03/2015
(21) Application No.287/KOL/2015 A
(43) Publication Date : 17/04/2015

(54) Title of the invention : CYMBOPOGON NARDUS ESSENTIAL OIL EXTRACT TO CURE FUNGAL INFECTED DIABETIC WOUNDS AND A METHOD OF EXTRACING THE SAME

(51) International classification	:A61K36/185, A61K/36/00
(31) Priority Document No	:NA
(32) Priority Date	:NA
(33) Name of priority country	:NA
(86) International Application No	:PCT//
Filing Date	:01/01/1900
(87) International Publication No	: NA
(61) Patent of Addition to Application Number	:NA
Filing Date	:NA
(62) Divisional to Application Number	:NA
Filing Date	:NA

(71)**Name of Applicant :**
1)KANDIMALLA, RAGHURAM
Address of Applicant :C/O INSTITUTE OF ADVANCED STUDY IN SCIENCE AND TECHNOLOGY, AN AUTONOMOUS R & D INSTITUTE OF DEPARTMENT OF SCIENCE & TECHNOLOGY, GOVT. OF INDIA, VIGYAN PATH, PASCHIM BORAGAON, GARCHUK, GUWAHATI - 781 035, ASSAM, INDIA
2)KALITA, SANJEEB
3)CHOUDHURY, BHASWATI
4)ELANCHERAN, R
5)DAS, MOMITA
6)TALUKDAR, NARAYAN CHANDRA
7)KOTOKY, JIBON
(72)**Name of Inventor :**
1)KANDIMALLA, RAGHURAM
2)KALITA, SANJEEB
3)CHOUDHURY, BHASWATI
4)ELANCHERAN, R
5)DAS, MOMITA
6)TALUKDAR, NARAYAN CHANDRA
7)KOTOKY, JIBON

(57) Abstract :
A method for extraction of cymbopogon nardus essential oil extract for healing of fungal infected diabetic wounds comprising hydro-distilling the desired mass of grass of cymbopogon nardus, in a suitable apparatus using 4 to 5 litres of de-ionized water for about 3 hours and obtaining the essential oil extract. The invention also relates to cymbopogon nardus essential oil extract obtained by the method.

No. of Pages : 17 No. of Claims : 6

Publication After 18 Months:

The following Patent Applications have been published under Section 11A (3) of The Patents (Amendment) Act, 2005. Any Person may file representation by way of opposition to the Controller of Patents at the appropriate office against the grant of the patent in the prescribed manner under section 25(1) of the Patents (Amendment) Act, 2005 read with the rule 55 of The Patents (Amendment) Rules, 2006:

(12) PATENT APPLICATION PUBLICATION

(21) Application No.3021/DEL/2013 A

(19) INDIA

(22) Date of filing of Application :10/10/2013

(43) Publication Date : 17/04/2015

(54) Title of the invention : A NOVEL COOLANT BOTTLE FOR AUTOMOBILES

(51) International classification	:B29L	(71)**Name of Applicant :**
(31) Priority Document No	:NA	**1)MARUTI SUZUKI INDIA LIMITED**
(32) Priority Date	:NA	Address of Applicant :1, NELSON MANDELA ROAD,
(33) Name of priority country	:NA	VASANT KUNJ, NEW DELHI-110070, INDIA. Delhi India
(86) International Application No	:NA	(72)**Name of Inventor :**
Filing Date	:NA	**1)PIYUSH AGRAWAL**
(87) International Publication No	: NA	**2)AASHISH PARMAR**
(61) Patent of Addition to Application Number	:NA	**3)ANSHUL KHATRI**
Filing Date	:NA	**4)RAVI SHASTRI**
(62) Divisional to Application Number	:NA	**5)PRIYANK NEGIQ**
Filing Date	:NA	

(57) Abstract :
This invention relates to a novel coolant bottle for automobiles comprising of a depression below its extended curved neck constituting obstruction for preventing spillage of coolant from said bottle during movement of vehicle. The present invention efficiently prevents leakage of coolant from the bottle particularly during movement of vehicle on rough, uneven and bumpy roads, while taking sharp turns or during sudden acceleration or deceleration.

No. of Pages : 15 No. of Claims : 10

(12) PATENT APPLICATION PUBLICATION
(19) INDIA
(22) Date of filing of Application :10/10/2013
(21) Application No.3022/DEL/2013 A
(43) Publication Date : 17/04/2015

(54) Title of the invention : IMPROVED FLOSSING DEVICE

(51) International classification :A61C
(31) Priority Document No :NA
(32) Priority Date :NA
(33) Name of priority country :NA
(86) International Application No :NA
Filing Date :NA
(87) International Publication No : NA
(61) Patent of Addition to Application Number :NA
Filing Date :NA
(62) Divisional to Application Number :NA
Filing Date :NA

(71)**Name of Applicant :**
1)KO, JUNG-CHING
Address of Applicant :NO. 10, LN. 190, SEC. 1, HANXI W. RD., EAST DISTRICT, TAICHUNG CITY 401, TAIWAN (R.O.C) Taiwan
(72)**Name of Inventor :**
1)KO, JUNG-CHING

(57) Abstract :
An improved flossing device has a main body, and two ends of the main body respectively have an end portion. Each end portion has two correspondingly side edges, wherein at least one end portion is disposed with a row of teeth portion. The row of teeth portion is formed by recessing several concave cavities along the side edge of the end portion, wherein each concave cavity is recessed toward a top end direction of the end portion to allow the side edge of the end portion to form several hook portions reversely extended toward the top end direction of the end portion, and the top edge of the hook portion is leveled with the side edge to prevent gingiva from being slashed by the hook portions.

No. of Pages : 18 No. of Claims : 8

(12) PATENT APPLICATION PUBLICATION
(19) INDIA
(22) Date of filing of Application :10/10/2013
(21) Application No.3023/DEL/2013 A
(43) Publication Date : 17/04/2015

(54) Title of the invention : A MILLING CUTTING TOOL

(51) International classification :G11B
(31) Priority Document No :NA
(32) Priority Date :NA
(33) Name of priority country :NA
(86) International Application No :NA
Filing Date :NA
(87) International Publication No : NA
(61) Patent of Addition to Application Number :NA
Filing Date :NA
(62) Divisional to Application Number :NA
Filing Date :NA

(71)**Name of Applicant :**
1)DIRECTOR GENERAL, DEFENCE RESEARCH & DEVELOPMENT ORGANISATION
Address of Applicant :Ministry of Defence, Govt of India, Room No 348, B-Wing, DRDO Bhawan, Rajaji Marg, New Delhi - 110105 Delhi India
(72)**Name of Inventor :**
1)Kishore Kumar Katikani
2)Santosh Kumar Panigrahi
3)Anne Venugopal

(57) Abstract :
The present invention relates to a milling cutting tool with a disc-shaped main body, the disc-shaped main body comprises a central axial through bore for the accommodation of a drive shaft, at least two sub-discs being placed coaxially at a predetermined distance and circumferentially sealed with each other so as to form space or passage there between, the disc-shape main body comprises a plurality of slots in order to accommodate cutting elements therein, the said cutting elements are tangentially located to the disc shape main body and are associated to the space between the sub-discs and bore of main disc body so that chips of machining material formed at the cutting zone of the cutting tool are collected in the space between the sub-discs and evacuated there from through the bore of the main disc body.

No. of Pages : 24 No. of Claims : 18

(12) PATENT APPLICATION PUBLICATION
(19) INDIA
(22) Date of filing of Application :06/01/2012
(21) Application No.172/DELNP/2012 A
(43) Publication Date : 17/04/2015

(54) Title of the invention : METHOD FOR THE REPLICATION, AMPLIFICATION OF SEQUENCING OF A DNA TEMPLATE

(51) International classification :C12N
(31) Priority Document No :P 200930412
(32) Priority Date :02/07/2009
(33) Name of priority country :Spain
(86) International Application No :PCT/ES2010/070456
Filing Date :02/07/2010
(87) International Publication No :WO 2010/000998
(61) Patent of Addition to Application Number :NA
Filing Date :NA
(62) Divisional to Application Number :NA
Filing Date :NA

(71)**Name of Applicant :**
1)CONSEJO SUPERIOR DE INVESTIGACIONES CIENTIFICAS (CSIC)
Address of Applicant :C/SERRANO, 117, E-28006 MADRID, SPAIN
(72)**Name of Inventor :**
1)MAGARITA SALAS FALGUERAS
2)MIGUEL DE VEGA JOS‰
3)JOS‰ M LAZARO BOLOS
4)LUIS BLANCO DAVILA
5)MARIO MENCIA CABALLERO

(57) Abstract :
The present invention is encompassed within the biotechnology field. Specifically, it relates to a method for replicating, amplifying or sequencing a deoxyribonucleic acid with a Φ29 type DNA polymerase and to a kit for carrying out said method.

No. of Pages : 32 No. of Claims : 40

(12) PATENT APPLICATION PUBLICATION
(19) INDIA
(22) Date of filing of Application :05/01/2012
(21) Application No.167/DELNP/2012 A
(43) Publication Date : 17/04/2015

(54) Title of the invention : COMPOSITIONS AND METHODS FOR TREATMENT OF MULTIPLE SCLEROSIS

(51) International classification :A01J
(31) Priority Document No :5777731
(32) Priority Date :16/06/2009
(33) Name of priority country :New Zealand
(86) International Application No :PCT/NZ2010/000112
Filing Date :16/01/2010
(87) International Publication No : NA
(61) Patent of Addition to Application Number :NA
Filing Date :NA
(62) Divisional to Application Number :NA
Filing Date :NA

(71)**Name of Applicant :**
1)INNATE IMMUNOTHERAPEUTICS LIMITED
Address of Applicant :4B Walls Road Penrose Auckland 1061 New Zealand
(72)**Name of Inventor :**
1)Frank B. GELDER
2)Gillian Alison WEBSTER

(57) Abstract :
The present invention is concerned with novel compositions and methods for the treatment of Multiple Sclerosis (MS) and in particular with immunostimulatory compositions comprising muramyl dipeptide microparticles in the treatment of MS.

No. of Pages : 40 No. of Claims : 15

(12) PATENT APPLICATION PUBLICATION
(19) INDIA
(22) Date of filing of Application :09/10/2013
(21) Application No.3004/DEL/2013 A
(43) Publication Date : 17/04/2015

(54) Title of the invention : INTELLIGENT COLLISION AVOIDANCE AND NAVIGATION SYSTEM FOR WATERCRAFT

(51) International classification	:B63H	(71)**Name of Applicant :**
(31) Priority Document No	:NA	**1)DR. RAJIV KAPOOR**
(32) Priority Date	:NA	Address of Applicant :QUARTER NO 3, TYPE 5, DELHI
(33) Name of priority country	:NA	TECHNOLOGICAL UNIVERSITY, BAWANA ROAD, DELHI
(86) International Application No	:NA	Delhi India
Filing Date	:NA	**2)DR. MANISH KUMAR SAINI**
(87) International Publication No	: NA	(72)**Name of Inventor :**
(61) Patent of Addition to Application Number	:NA	**1)DR. RAJIV KAPOOR**
Filing Date	:NA	**2)SHASHANK GARG**
(62) Divisional to Application Number	:NA	**3)ROHIT KUMAR SINGH**
Filing Date	:NA	**4)DR. MANISH KUMAR SAINI**

(57) Abstract :
The application is an electronic control system of a watercraft that is capable of autonomously sailing and navigating its way through obstacles present around it. Apart from moving on a pre-defined path the watercraft can intelligently avoid obstacles in the path through its ability of decision making using fuzzy logic. The system consists of a data flow controller which controls the flow of data in an efficient manner and drives ship as required. The ports for output signals are provided for the propeller drive and the steering servo. The ship is able to communicate wirelessly to provide useful data from the watercraft to the station, other watercrafts and even the subsystems of the watercraft. The fuzzy logic controller is provided at the station side which continuously guides the watercraft for its path. The electronic system designed for the watercraft has excellent scalability.

No. of Pages : 18 No. of Claims : 4

(12) PATENT APPLICATION PUBLICATION
(19) INDIA
(22) Date of filing of Application :07/11/2013
(21) Application No.3289/DEL/2013 A
(43) Publication Date : 17/04/2015

(54) Title of the invention : A MOTOR VEHICLE SEAT HAVING AN ARMREST

(51) International classification :B60N
(31) Priority Document No :1318275.3
(32) Priority Date :16/10/2013
(33) Name of priority country :U.K.
(86) International Application No :NA
Filing Date :NA
(87) International Publication No : NA
(61) Patent of Addition to Application Number :NA
Filing Date :NA
(62) Divisional to Application Number :NA
Filing Date :NA

(71)**Name of Applicant :**
1)FORD GLOBAL TECHNOLOGIES, LLC.
Address of Applicant :SUITE 800, 330 TOWN CENTER DRIVE, DEARBORN, MICHIGAN 48126 USA
(72)**Name of Inventor :**
1)MENDICINO, TERESA
2)GERHARDT, TORSTEN
3)WOODHOUSE, DAVID
4)BLABER, LEWIS

(57) Abstract :
An armrest 50 is disclosed for a passenger occupying a rear seat 20 is disclosed that is rotatably attached to a backrest 12 of a front seat 10. The armrest 50 is rotatably connected to a support 10 frame 13 of the backrest 12 so as to be rotatable between a substantially horizontally disposed in-use position and a stowed position in which it lies against a rear face of the backrest 12.

No. of Pages : 34 No. of Claims : 17

(12) PATENT APPLICATION PUBLICATION
(19) INDIA
(22) Date of filing of Application :02/02/2012
(21) Application No.948/DELNP/2012 A
(43) Publication Date : 17/04/2015

(54) Title of the invention : TWO-PIECE OSTOMY DEVICE WITH GUIDING AID FOR COUPLING

(51) International classification :A61F 5/448
(31) Priority Document No :PA 2009 70077
(32) Priority Date :04/08/2009
(33) Name of priority country :Denmark
(86) International Application No :PCT/DK2010/050202
Filing Date :04/08/2010
(87) International Publication No :WO 2011/015201
(61) Patent of Addition to Application Number :NA
Filing Date :NA
(62) Divisional to Application Number :NA
Filing Date :NA

(71)**Name of Applicant :**
1)COLOPLAST A/S
Address of Applicant :HOLTEDAM 1, DK-3050 HUMLEBAEK, DENMARK
(72)**Name of Inventor :**
1)RASMUS LUNDHOLT
2)ANDERS ROERDAM MICHELSEN

(57) Abstract :
The invention relates to a two-piece ostomy device comprising a base plate for adhering to the skin surrounding a stoma and a releasable collecting bag for collecting output from said stoma. The base plate is releasably connectable to the collecting bag via a first annular flange arranged on the base plate and a second annular flange arranged on the collecting bag. An adhesive is at least partly disposed on at least one of the flanges. The ostomy device further comprises a first through-going hole extending through the first annular flange along a first axis and a second through-going hole extending through the second annular flange along a second axis, wherein the ostomy device further comprises a guiding aid for arranging the first annular flange and the second annular flange in a guiding configuration. In the guiding configuration the movement of the first and the second flange is limited relative to each other in one plane being defined by the first and the second axis and in rotation around at least one of the first or the second axis. The limited movement of the base plate and the collecting bag provides a two-piece system which is easier to apply correctly and thus reduces the risk of leakage.

No. of Pages : 21 No. of Claims : 4

(12) PATENT APPLICATION PUBLICATION
(19) INDIA
(22) Date of filing of Application :11/10/2013
(21) Application No.3040/DEL/2013 A
(43) Publication Date : 17/04/2015

(54) Title of the invention : CHIMERIC STAPHYLOKINASE WITH ENHANCED PLASMINOGEN ACTIVATION AND CLOT DISSOLVING ABILITY

(51) International classification :A61K
(31) Priority Document No :NA
(32) Priority Date :NA
(33) Name of priority country :NA
(86) International Application No :NA
Filing Date :NA
(87) International Publication No : NA
(61) Patent of Addition to Application Number :NA
Filing Date :NA
(62) Divisional to Application Number :NA
Filing Date :NA

(71)**Name of Applicant :**
1)COUNCIL OF SCIENTIFIC & INDUSTRIAL RESEARCH
Address of Applicant :ANUSANDHAN BHAWAN, RAFI MARG, NEW DELHI-110001, INDIA Delhi India
(72)**Name of Inventor :**
1)SATISH SINGH
2)TIMSY BHANDO
3)KANAK LATA DIKSHIT

(57) Abstract :
The present invention relates to novel chimeric plasminogen activators where Staphylokinase (SAK) or its modified derivatives having plasminogen activator activity are integrated with a polypeptide having high affinity for one or more kringle domains of human plasminogen that enhances its catalytic efficiency for plasminogen activation and the clot lysis as compared to the native SAK molecule. Thus, these novel derivatives of Staphylokinase may have high potential in thrombolytic therapy in comparison to wild type SAK and can be utilized as better protein therapeutics. This invention relates to the field of cardiovascular therapeutics, particularly to the thrombolytic drugs that are utilized for the treatment of various cardiovascular diseases.

No. of Pages : 38 No. of Claims : 11

(12) PATENT APPLICATION PUBLICATION
(19) INDIA
(22) Date of filing of Application :11/10/2013
(21) Application No.3041/DEL/2013 A
(43) Publication Date : 17/04/2015

(54) Title of the invention : A METHOD FOR PRODUTION OF TRANSGENIC COTTON PLANTS.

(51) International classification :C12N
(31) Priority Document No :NA
(32) Priority Date :NA
(33) Name of priority country :NA
(86) International Application No :NA
Filing Date :NA
(87) International Publication No : NA
(61) Patent of Addition to Application Number :NA
Filing Date :NA
(62) Divisional to Application Number :NA
Filing Date :NA

(71)**Name of Applicant :**
1)COUNCIL OF SCIENTIFIC & INDUSTRIAL RESEARCH
Address of Applicant :ANUSANDHAN BHAWAN, RAFI MARG, NEW DELHI - 110001, INDIA. Delhi India
(72)**Name of Inventor :**
1)SAWANT SAMIR VISWANATH
2)TRIPATHI RAJIV KUMAR
3)IDRIS ASIF

(57) Abstract :
The present invention provides a method for producing transgenic Cotton plants. In one method transformed plants, that overexpress the transgene shows a phenotype that includes increased boll number, size and lint percentage in compare to the wild type plants; whereas in the second method transformed plants that reduced the transgene level produced plants with decreased number of cotton boll, size and lint percentage in compare to wild type and overexpression line both. q-RT PCR analysis showed that transgene transcript level was higher at fiber initiation stage (ODPA) after that its level decreases throughout all developmental stages.

No. of Pages : 30 No. of Claims : 1

(12) PATENT APPLICATION PUBLICATION
(19) INDIA
(22) Date of filing of Application :07/02/2012
(21) Application No.1150/DELNP/2012 A
(43) Publication Date : 17/04/2015

(54) Title of the invention : METHOD AND DEVICE FOR ALLOCATING ACCESS NUMBERS

(51) International classification :H01Q
(31) Priority Document No :200910162588.X
(32) Priority Date :03/08/2009
(33) Name of priority country :China
(86) International Application No :PCT/CN2009/075523
Filing Date :11/12/2009
(87) International Publication No : NA
(61) Patent of Addition to Application Number :NA
Filing Date :NA
(62) Divisional to Application Number :NA
Filing Date :NA

(71)**Name of Applicant :**
1)ZTE CORPORATION
Address of Applicant :ZTE Plaza Keji Road South Hi-Tech Industrial Park Nanshan Shenzhen Guangdong 518057 China
(72)**Name of Inventor :**
1)HU Xiubing;
2)CHENG Jun;

(57) Abstract :
The present invention discloses a method and device for allocating access numbers in a short message system, which are used to solve the problem in the prior art that the short message system probably cannot be accessed by more Service Providers (SPs) as more and more SPs access the short message system. The method of the present invention includes: allocating any one of access numbers to at least two service providers; allocating service codes and uplink operation instructions to the service providers to which the access number has been allocated, wherein the service codes allocated to the different service providers are different from each other, and the uplink operation instructions allocated to the different service providers are different from each other; and storing corresponding relation among the access number, identifications, the service codes and the uplink operation instructions of the different service providers. According to the solution in the present invention, the allocated access numbers can also be reused even though more SPs access the short message system, thereby greatly improving the utilization ratio of the resource of access numbers.

No. of Pages : 35 No. of Claims : 11

(12) PATENT APPLICATION PUBLICATION
(19) INDIA
(22) Date of filing of Application :11/10/2013
(21) Application No.3036/DEL/2013 A
(43) Publication Date : 17/04/2015

(54) Title of the invention : A PURSE WITH INTEGRATED & AUTOMATIC ILLUMINATION IN A CONTROLLED MANNER

(51) International classification :A45C
(31) Priority Document No :NA
(32) Priority Date :NA
(33) Name of priority country :NA
(86) International Application No :NA
Filing Date :NA
(87) International Publication No : NA
(61) Patent of Addition to Application Number :NA
Filing Date :NA
(62) Divisional to Application Number :NA
Filing Date :NA

(71)**Name of Applicant :**
1)RIDHIMA BAGLA
Address of Applicant :743, CHHOTA BAZAR KASHMERE GATE, DELHI 110006 Delhi India
(72)**Name of Inventor :**
1)RIDHIMA BAGLA

(57) Abstract :
The present invention relates to a purse with integrated & automatic illumination in a controlled manner. More particularly this invention relates to having integrated & built-in lighting system having controlled illumination inside the purse adjustable according to the intensity of the ambient lighting when the purse is opened. More particularly, this invention relates to an improved purse with integrated lighting system which automatically detects for the need for light in the purse or not as well as optimum intensity of light inside the purse.

No. of Pages : 28 No. of Claims : 4

(12) PATENT APPLICATION PUBLICATION
(19) INDIA
(22) Date of filing of Application :11/10/2013
(21) Application No.3039/DEL/2013 A
(43) Publication Date : 17/04/2015

(54) Title of the invention : IMPROVED ADDITIVE COMPOSITION FOR PAPER INDUSTRY

(51) International classification	:D21H	(71)**Name of Applicant :**
(31) Priority Document No	:NA	**1)AMITY UNIVERSITY**
(32) Priority Date	:NA	Address of Applicant :AMITY UNIVERSITY CAMPUS,
(33) Name of priority country	:NA	SECTOR-125, NOIDA-201303, UP, INDIA Uttar Pradesh India
(86) International Application No	:NA	(72)**Name of Inventor :**
Filing Date	:NA	**1)HARSHA KHARKWAL**
(87) International Publication No	: NA	
(61) Patent of Addition to Application Number	:NA	
Filing Date	:NA	
(62) Divisional to Application Number	:NA	
Filing Date	:NA	

(57) Abstract :
The present invention relates to a more improved additive composition for paper industry. The composition comprising the glyoxal crosslinked Sodium Carboxymethyl grandis along with carboxymethyl2-hydroxypropyl ether of grandis which can be used as a smoothing and sizing agent in the paper industry. 0.05% to 0.5% of Carboxymethyl grandis added into the pulp can enhance 70% of the tensile strength and degree of compression fracture for the paper, increasing 6 to 8 times of kneading. The application of this additive can be used in the paper and pulp industry.

No. of Pages : 12 No. of Claims : 5

(12) PATENT APPLICATION PUBLICATION
(19) INDIA
(22) Date of filing of Application :15/10/2013
(21) Application No.3064/DEL/2013 A
(43) Publication Date : 17/04/2015

(54) Title of the invention : SAFETY HELMET WITH DIRECTION INDICATORS

(51) International classification :A42B
(31) Priority Document No :NA
(32) Priority Date :NA
(33) Name of priority country :NA
(86) International Application No :NA
Filing Date :NA
(87) International Publication No : NA
(61) Patent of Addition to Application Number :NA
Filing Date :NA
(62) Divisional to Application Number :NA
Filing Date :NA

(71)**Name of Applicant :**
1)NAKUL VACHER
Address of Applicant :2 A KIRPA NARAIN MARG, CIVIL LINES, DELHI-110054, INDIA Delhi India
2)PANKAJ
(72)**Name of Inventor :**
1)NAKUL VACHER
2)PANKAJ MALIK

(57) Abstract :
The present invention pertains to a safety helmet with direction indicators worn by riders while riding a bike, motorcycle, bicycle or any other two/three/four wheeler vehicle. More particularly the present invention relates to a helmet with light indicators that work on Intuitive Balance Transfer System technology to show the direction in which the rider wearing thc helmet is going to turn. Figure 01

No. of Pages : 15 No. of Claims : 7

(12) PATENT APPLICATION PUBLICATION
(19) INDIA
(22) Date of filing of Application :14/10/2013
(21) Application No.1115/DEL/2013 A
(43) Publication Date : 17/04/2015

(54) Title of the invention : DEVICE TO CONTROL BLEEDING FROM WOUND

(51) International classification :B60T
(31) Priority Document No :NA
(32) Priority Date :NA
(33) Name of priority country :NA
(86) International Application No :NA
Filing Date :NA
(87) International Publication No : NA
(61) Patent of Addition to Application Number :NA
Filing Date :NA
(62) Divisional to Application Number :NA
Filing Date :NA

(71)**Name of Applicant :**
1)SHEELAM BAJPAI
Address of Applicant :127, SALARIA OFFICERS ENCLAVE, SECTOR-21, DWARKA, N.DELHI. Delhi India
(72)**Name of Inventor :**
1)SHEELAM BAJPAI

(57) Abstract :
The present invention relates to equipment to stop bleeding by providing localised pressure over wound, providing splint support to injured part of the body without comprising functioning of other healthy tissue of body part, in a short time even without the help of trained medic. This invention consists of C-shaped structure to engage injured bleeding body part by a gliding pressure block to compress bleeding blood vessels to be held together by a screw to ensure local continuous pressure, along with a device to ensure splint.

No. of Pages : 11 No. of Claims : 10

(12) PATENT APPLICATION PUBLICATION
(19) INDIA
(22) Date of filing of Application :09/10/2013
(21) Application No.3009/DEL/2013 A
(43) Publication Date : 17/04/2015

(54) Title of the invention : HOW TO PRODUCE DRINKING WATER DAILY 1 BILLION PEOPLE.

(51) International classification :B82Y
(31) Priority Document No :NA
(32) Priority Date :NA
(33) Name of priority country :NA
(86) International Application No :NA
Filing Date :NA
(87) International Publication No : NA
(61) Patent of Addition to Application Number :NA
Filing Date :NA
(62) Divisional to Application Number :NA
Filing Date :NA

(71)**Name of Applicant :**
1)KUU WATER PURIFY PROJECTS PVT. LTD.
Address of Applicant :C-2/5, WEST ENCLAVE, PITAM PURA, DELHI-110034, INDIA Delhi India
(72)**Name of Inventor :**
1)SATOSHI MORI

(57) Abstract :
We are to analyze the extreme anomaly of water with the quantum theory and produce drinking water out of seawater daily in the shortest possible time for 1 billion people. The very first thing we came up with is the quantum theory. The finding of Gamov, in which the mechanism of collapse of an atomic nucleus is based on a tunnel effect, was a key to our idea. Our theme is how to make use of the tunnel effect in our project. And dynamic motion of water molecule is substantially the same whether it is still or flowing and hydrogen bonding repeatedly occurs and snaps. There exist certain commonality between the structure of water molecule and a particle/antiparticle in the quantum theory. This commonality means the possibility to educe the unknown depending on how to experiment. Seawater is put into a tank for an experiment. This tank is connected to several quantum computers. The paramount importance of the seawater is surface tension, which we will utilize. Gentle electric current is placed at the bottom of the tank so that high-salt-content molecules will move up to the surface. Above the surface is a vacuum condition and using a powerful accelerator these molecules will be emitted in the air. The seawater without any salt will be moved to the next tank and the micro-sized experiment will move on to the next stage, the macro-sized experiment. The term of this experiment is expected to last two years. We are to concentrate how to shorten this term to just 150 minutes in the first stage. And when the experiment can be done in 90 minutes, we will begin the actual operation.

No. of Pages : 15 No. of Claims : 5

(12) PATENT APPLICATION PUBLICATION
(19) INDIA
(22) Date of filing of Application :11/10/2013
(21) Application No.3043/DEL/2013 A
(43) Publication Date : 17/04/2015

(54) Title of the invention : METHOD AND SYSTEM TO DETERMINE THE COORDINATES OF AN OBJECT

(51) International classification	:G01B	
(31) Priority Document No	:NA	
(32) Priority Date	:NA	
(33) Name of priority country	:NA	
(86) International Application No	:NA	
Filing Date	:NA	
(87) International Publication No	: NA	
(61) Patent of Addition to Application Number	:NA	
Filing Date	:NA	
(62) Divisional to Application Number	:NA	
Filing Date	:NA	

(71)**Name of Applicant :**
1)VIKRAM VERMA
Address of Applicant :H.NO. 88, SECTOR-7, URBAN ESTATE KURUKSHTERA-136118, HARYANA India
(72)**Name of Inventor :**
1)VIKRAM VERMA

(57) Abstract :
The present invention provides an apparatus for accurately measuring dimensions of objects of various sizes and shapes. The apparatus include a base plate, a first vertically adjusting sensor mounting shaft having a first set of plurality of measurement sensors, a second vertically adjusting sensor mounting shaft having a second set of plurality of measurement sensors, a first horizontal sliding rail and a second horizontal sliding rail perpendicular to the first horizontal sliding rail. The first set of plurality of measurement sensors and the second set of plurality of measurement sensors are adapted to move along a horizontal direction and a vertical direction in each of a plurality of pre-defined paths at pre-defined time intervals to record coordinates of an object placed on the base plate.

No. of Pages : 30 No. of Claims : 10

(12) PATENT APPLICATION PUBLICATION
(19) INDIA
(22) Date of filing of Application :09/10/2013
(21) Application No.3018/DEL/2013 A
(43) Publication Date : 17/04/2015

(54) Title of the invention : SYSTEM AND METHOD FOR INJECTING A TARGET IN ACTIVE PHASED ARRAY RADARS

(51) International classification :G01S
(31) Priority Document No :NA
(32) Priority Date :NA
(33) Name of priority country :NA
(86) International Application No :NA
Filing Date :NA
(87) International Publication No : NA
(61) Patent of Addition to Application Number :NA
Filing Date :NA
(62) Divisional to Application Number :NA
Filing Date :NA

(71)**Name of Applicant :**
1)THE DIRECTOR GENERAL, DEFENCE RESEARCH & DEVELOPMENT ORGANISATION (DRDO)
Address of Applicant :Ministry of Defence, Government of India, Room No. 348, B-wing, DRDO Bhawan, Rajaji Marg, New Delhi-110105, India. Delhi India
(72)**Name of Inventor :**
1)UPENDRA SHANKAR PANDEY
2)VIRENDRA KUMAR
3)LOURDU GNANA MICHAEL PRAKASAM
4)POOLANDIYIL AZEEZ
5)ELAYAPERUMAL SUBRAMANIYAN
6)JEGANNATHAN SENTHIL RENGARAJAN

(57) Abstract :
Embodiment of the present disclosure provides a device and method generation radar target simulation, including effects of environment disturbances (clutter) and manmade electronic countermeasure (ECM). Signal injection allows the radar to be stressed in an electronic environment similar to what will be encounter in the field. This provides high degree of repeatability and flexibility to inject the signal at various points along the signal path to characterize individual sections of the radar or to isolate problem areas. Actual radar signals are used to evaluate and characterize the radar from its RF front end through digital signal processing and radar data processor. This is particularly useful when verifying and stressing signal processing and tracking loop algorithms. Also, an improved calibrating phase array radar system for maintaining an accurate phase response in the transmit path from the exciter to each antenna element in the active array phase radar.

No. of Pages : 33 No. of Claims : 10

(12) PATENT APPLICATION PUBLICATION
(19) INDIA
(22) Date of filing of Application :09/10/2013
(21) Application No.3019/DEL/2013 A
(43) Publication Date : 17/04/2015

(54) Title of the invention : DATA RETRIEVAL IN COMMUNICATION DEVICES

(51) International classification :G06Q
(31) Priority Document No :NA
(32) Priority Date :NA
(33) Name of priority country :NA
(86) International Application No :NA
Filing Date :NA
(87) International Publication No : NA
(61) Patent of Addition to Application Number :NA
Filing Date :NA
(62) Divisional to Application Number :NA
Filing Date :NA

(71)**Name of Applicant :**
1)SAMSUNG INDIA ELECTRONICS PVT. LTD.
Address of Applicant :Logix Cyber Park Plot No. C- 28 & 29 Tower D 2nd Floor Sector - 62 Noida Uttar Pradesh 201301 Uttar Pradesh India
(72)**Name of Inventor :**
1)GOVEKAR, Dhananjay L
2)ASTHANA, Swati
3)KHAN, Munwar
4)MANNA, Supriya
5)LAL, Chandrakesh Bihari
6)KOLTEKE, Manish Vinayakrao
7)GOEL, Priyanka

(57) Abstract :
The present subject matter describes a communication device (102) for retrieving data. The communication device (102) receives an input from a user. The input is indicative of a command provided by the user for conducting a search on a plurality of data items stored under multiple categories in the communication device (102). Further, the communication device (102) identifies a set of matching data items from the plurality of data items based on the input. The communication device (102) also retrieves the set of matching data items and generate a list of the matching data items in the set of matching data items. At least one of the matched data items is associated with one or more triggers (206) to perform an action corresponding to the at least one matched data item. Furthermore, the list of the matching data items is provided to the user along with the one or more triggers (206).

No. of Pages : 28 No. of Claims : 17

(12) PATENT APPLICATION PUBLICATION
(19) INDIA
(22) Date of filing of Application :11/10/2013
(21) Application No.3047/DEL/2013 A
(43) Publication Date : 17/04/2015

(54) Title of the invention : LOWER MOLECULAR WEIGHT PS CONJUGATE VACCINE WITH ENHANCED IMMUNOGENICITY AND PROCESS THEREOF

(51) International classification :A61K
(31) Priority Document No :NA
(32) Priority Date :NA
(33) Name of priority country :NA
(86) International Application No :NA
Filing Date :NA
(87) International Publication No : NA
(61) Patent of Addition to Application Number :NA
Filing Date :NA
(62) Divisional to Application Number :NA
Filing Date :NA

(71)**Name of Applicant :**
1)MSD WELLCOME TRUST HILLEMAN LABORATORIES PVT. LTD.
Address of Applicant :D-15, GROUND FLOOR, JANGPURA EXTENSION, NEW DELHI-110014, Delhi India
(72)**Name of Inventor :**
1)GILL, DAVINDER
2)CHHIKARA, MANOJ KUMAR
3)RANA, RAKESH
4)DALA, JUNED
5)SINGH, DEEPTI
6)KANCHAN, VIBHU

(57) Abstract :
The present invention relates to polysaccharide protein conjugates with enhanced immunogenicity displaying significantly high antibody titres. The carrier protein is obtained from group of gram positive bacteria, polysaccharide fragment is obtained from group of gram negative bacteria, preferably from Haemophilus influenzae serotype b (Hib), Neisseria meningitidis serogroup A and C (MenA and MenC). The present invention also relates to a rapid and high yielding process of preparing the polysaccharideprotein conjugates in which derivatized carrier protein reacts with cleaved and depolymerized polysaccharide fragments of optimum length to obtain polysaccharide protein conjugate employing reductive amination chemistry. The present invention further relates to a chemical process of polysaccharide fragmentation to optimum length for use in conjugation.

No. of Pages : 40 No. of Claims : 19

(12) PATENT APPLICATION PUBLICATION
(19) INDIA
(22) Date of filing of Application :14/10/2013
(21) Application No.3057/DEL/2013 A
(43) Publication Date : 17/04/2015

(54) Title of the invention : DELIVERY PUMP UNIT

(51) International classification :E05D
(31) Priority Document No :NA
(32) Priority Date :NA
(33) Name of priority country :NA
(86) International Application No :NA
Filing Date :NA
(87) International Publication No : NA
(61) Patent of Addition to Application Number :NA
Filing Date :NA
(62) Divisional to Application Number :NA
Filing Date :NA

(71)**Name of Applicant :**
1)CONTINENTAL AUTOMOTIVE GmbH
Address of Applicant :Vahrenwalder Strae 9, 30165 Hannover, Germany Germany
(72)**Name of Inventor :**
1)KUMMETZ VOLKER
2)ELLENBERG ANDREAS

(57) Abstract :
A Delivery pump unit (2) for a common rail pump assembly comprises a housing (4, 6), an inner rotor (8) having outwardly extending lobes (28) and an outer rotor (10) having a central cutout (30) with inwardly extending protrusions (32) meshable with the lobes (28) of the inner rotor (8). The outer rotor (10) is rotatably supported in a first bearing (16), which encloses the outer rotor (10) and is arranged in the housing (4, 6). The housing (4, 6) comprises a second bearing (12) eccentric to the first bearing (16), the inner rotor (8) is rotatably supported in the second bearing (12) and the delivery pump unit comprises a separate coupling device (18), which has a hub (20) for receiving a shaft (21) and which is engageable with at least one correspondingly shaped recess (26) of the inner rotor (8). Bending effects on a shaft from a high pressure pump driving the delivery pump does not lead to defects of the delivery pump components.

No. of Pages : 16 No. of Claims : 7

(12) PATENT APPLICATION PUBLICATION
(19) INDIA
(22) Date of filing of Application :14/10/2013
(21) Application No.3058/DEL/2013 A
(43) Publication Date : 17/04/2015

(54) Title of the invention : HIGH PRESSURE PUMP

(51) International classification :F02M
(31) Priority Document No :NA
(32) Priority Date :NA
(33) Name of priority country :NA
(86) International Application No :NA
Filing Date :NA
(87) International Publication No : NA
(61) Patent of Addition to Application Number :NA
Filing Date :NA
(62) Divisional to Application Number :NA
Filing Date :NA

(71)**Name of Applicant :**
1)CONTINENTAL AUTOMOTIVE GmbH
Address of Applicant :Vahrenwalder Strae 9, 30165 Hannover, Germany
(72)**Name of Inventor :**
1)BHAT UDAY
2)EDERER ANDREAS
3)MAGADIBYREDEVARU THEJESH KUMAR
4)NIGRIN UWE
5)OLIK MARCIN
6)VU NGOC-TAM

(57) Abstract :
A high pressure pump (2)for a common rail pump system comprises a pump body (4) having a cylinder (6) with a piston bore (8) and a piston (10) reciprocally driven in the piston bore (8) by an eccentric to pressurize fuel in the cylinder (6). The pis-ton (10) comprises an inner end (12) located in the piston bore (8) and an outer end (14) outside the piston bore (8). A bellow (20) having a first opening (22) and a second opening (24) is arranged between the piston (10) and the pump body (4), wherein the piston (10) extends through the first opening (22) and the second opening (24), wherein the bellow (20) is connected to the pump body (40) such that the first opening (22) is sealed on the pump body (4, 50) and wherein the bellow (20) is connected to the outer end (14) of the piston (10) such that the second opening (24) is sealed on the piston (10). This prevents mixing of engine oil and fuel, when the pump is directly attached to an engine. The bellow may be connected to a drainage line over a one-way valve.

No. of Pages : 20 No. of Claims : 10

(12) PATENT APPLICATION PUBLICATION
(19) INDIA
(22) Date of filing of Application :15/10/2013
(21) Application No.3068/DEL/2013 A
(43) Publication Date : 17/04/2015

(54) Title of the invention : COLD JUICE CLARIFICATION PROCESS

(51) International classification :C13B
(31) Priority Document No :NA
(32) Priority Date :NA
(33) Name of priority country :NA
(86) International Application No :NA
Filing Date :NA
(87) International Publication No : NA
(61) Patent of Addition to Application Number :NA
Filing Date :NA
(62) Divisional to Application Number :NA
Filing Date :NA

(71)**Name of Applicant :**
1)VIVEK VERMA
Address of Applicant :SPRAY ENGINEERING DEVICES LIMITED, SPRAY HOUSE, C-82, INDUSTRIAL AREA, PHASE-7, MOHALI-160055, INDIA Punjab India
(72)**Name of Inventor :**
1)VERMA VIVEK

(57) Abstract :
The present invention provides a process for cold clarification of juice. The invention refers to a sugar cane or beet juice clarification process to clarify raw juice by means of deaeration of fresh raw juice, addition of milk of lime, anionic and/or cationic flocculants, particularly together with a carbonating process, addition of phosphoric acid and then passing the juice through activated carbon bed. The invention eliminates the need of heating the juice at any stage thus making it more cost effective, energy saving and gives better yield in terms of quality and quantity both. Furthermore, it describes the recycling of defecated, carbonated and phosphated filtered juice and carbonated & phosphated mud that reduces the consumption of lime, C02 and phosphoric acid up to some extent.

No. of Pages : 14 No. of Claims : 9

(12) PATENT APPLICATION PUBLICATION
(19) INDIA
(22) Date of filing of Application :06/01/2012
(21) Application No.55/DEL/2012 A
(43) Publication Date : 17/04/2015

(54) Title of the invention : BENZOTHIAZOLE COMPOUNDS AND PROCESS FOR THE PREPARATION THEREOF

(51) International classification :C07C
(31) Priority Document No :NA
(32) Priority Date :NA
(33) Name of priority country :NA
(86) International Application No :NA
Filing Date :NA
(87) International Publication No :NA
(61) Patent of Addition to Application Number :NA
Filing Date :NA
(62) Divisional to Application Number :2179/DEL/2010
Filed on :14/09/2011

(71)**Name of Applicant :**
1)COUNCIL OF SCIENTIFIC & INDUSTRIAL RESEARCH
Address of Applicant :ANUSANDHAN BHAWAN, RAFI MARG, NEW DELHI - 110001, INDIA. Delhi India
(72)**Name of Inventor :**
1)AHMED KAMAL
2)RAJESH VENKATA CHENNA RAMA NARASIMHA CHENNAM SHETTI
3)PONNAMPALLI SWAPNA
4)SHAIK AZEEZA
5)ADLA MALLA REDDY
6)INSHAD ALI KHAN
7)SHEIKH TASDUQ ABDULLAH
8)SANDEEP SHARMA
9)NITIN PAL KALIA

(57) Abstract :
The present invention provides a compound of general formula A useful as potential anti-tubercular agents X = -N=CH-, -NH-CO-, -CO- Ar = Phenyl, 4-methylphenyl, 4-methoxyphenyl, 4-trifluoromethylphenyl, 4-trifluoromethoxyphenyl 4-fluorophenyl, 4-chlorophenyl, 2-chloro-3-methoxyphenyl, 3,5-dimethoxyphenyl, 3,4,5-trimethoxyphenyl, pyridyl, nicotenyl, isonicotinyl, 5-nitro-2-furyl, styryl, 4-fluorostyryl, 4- methylstyryl, 4-methoxystyryl, 4-trifluorostyryl, 4-trifluoromethoxystyryl, 5-nitro-2-furyl, 1-methyl-4-nitro-1H-2-pyrrolyl, 1 -methyl-5-nitro-1H-2-imadazolyl, 1 -methyl-3-nitro-1H-2-pyrazolyl R = Hydro, Methyl, Methoxy, Trifluoromethyl, Trifluoromethoxy, Fluoro, Chloro, Nitro, 5-Nitrpfuran-2-carboxamide, 5-Nitrothiophene-2-carboxamide, 1 -methyl-4-nitro-1H-2-pyrrolcarboxamide, 1 -methyl-5-nitro-1H-2-imadazolcarboxamide, 1 -methyl-3-nitro-1H-2-pyrazolcarboxamide General Formula A Ar = Phenyl, 4-methylphenyl, 4-methoxyphenyl, 4-trifluoromethylphenyl, 4-trifluoromethoxyphenyl 4-fluorophenyl, 4-chlorophenyl, 2-chloro-3-methoxyphenyl, 3,5-dimethoxyphenyl, 3,4,5-trimethoxyphenyl, pyridyl, nicotenyl, isonicotinyl, 5-nitro-2-furyl, styryl, 4-fluorostyryl, 4- methylstyryl, 4-methoxystyryl, 4-trifluorostyryl, 4-trifluoromethoxystyryl Ar = 5-nitro-2-furyl, 1-methyl-4-nitro-1H-2-pyrrolyl, 1-methyl-5-nitro-1H-2-imadazolyl,1-methyl-3-nitro-1H-2-pyrazolyl

No. of Pages : 38 No. of Claims : 8

(12) PATENT APPLICATION PUBLICATION
(19) INDIA
(22) Date of filing of Application :14/10/2013
(21) Application No.3051/DEL/2013 A
(43) Publication Date : 17/04/2015

(54) Title of the invention : A PROCESS FOR PREPARATION OF Cu-BASED BRAZING ALLOYS FOR JOINING STEEL

(51) International classification :B22D11/00
(31) Priority Document No :NA
(32) Priority Date :NA
(33) Name of priority country :NA
(86) International Application No :NA
Filing Date :NA
(87) International Publication No : NA
(61) Patent of Addition to Application Number :NA
Filing Date :NA
(62) Divisional to Application Number :NA
Filing Date :NA

(71)**Name of Applicant :**
1)COUNCIL OF SCIENTIFIC & INDUSTRIAL RESEARCH
Address of Applicant :ANUSANDHAN BHAWAN, RAFI MARG, NEW DELHI-110001, INDIA Delhi India
(72)**Name of Inventor :**
1)ROY RAJAT KUMAR
2)PANDA ASHIS KUMAR
3)MITRA AMITAVA

(57) Abstract :
The present invention relates to a process for preparation of Cu-based brazing alloys for joining steel components. The present invention particularly relates to a process development for preparation of rapidly solidified Cu based brazing alloys for high strength steel joints. The present invention will be useful for the joining of steel components. A process comprises mixing the pure element of copper, nickel, manganese and chromium to obtain general alloy formula Cu100-x-y-zMnxNiyCrz where x may have the rage between 30 to 50, y may have the range between 5 to 15 and z may have the range between 1 to 5.

No. of Pages : 11 No. of Claims : 5

(12) PATENT APPLICATION PUBLICATION
(19) INDIA
(22) Date of filing of Application :07/02/2012
(21) Application No.1149/DELNP/2012 A
(43) Publication Date : 17/04/2015

(54) Title of the invention : CLUSTER SERVER OF AN INSTANT MESSAGING SYSTEM AND MESSAGING METHOD BETWEEN CLUSTERS

(51) International classification :C10L 1/19
(31) Priority Document No :200910090237.2
(32) Priority Date :03/08/2009
(33) Name of priority country :China
(86) International Application No :PCT/CN2009/075954
Filing Date :24/12/2009
(87) International Publication No : NA
(61) Patent of Addition to Application Number :NA
Filing Date :NA
(62) Divisional to Application Number :NA
Filing Date :NA

(71)**Name of Applicant :**
1)ZTE CORPORATION
Address of Applicant :ZTE Plaza Keji Road South Hi-Tech Industrial Park Nanshan Shenzhen Guangdong 518057 China
(72)**Name of Inventor :**
1)CUI Zhenfeng;
2)LU Jianfeng;

(57) Abstract :
This disclosure discloses a cluster server and a messaging method between clusters in an instant messaging system, wherein in the cluster server, a storage unit is configured to store the first subscription information that a client user of the inner-cluster subscribes the presence state of a client user of an external cluster and the second subscription information that a client user of the external cluster subscribes the presence state of a client user of the inner-cluster; an information classification unit is configured to determine whether the communication message transmitted between the client user of the inner-cluster and the client user of the external cluster is a state-presence related message; and an information transmission unit is configured to transmit the communication messages according to the first and second subscription information when the communication message is a state-presence related message. Through the cluster server and method of this disclosure, by classifying the messages between the clusters, the objectives of effectively using the network bandwidths between the clusters and improving the messaging efficiency and the bearing capacity of the whole instant messaging system are fulfilled.

No. of Pages : 28 No. of Claims : 10

(12) PATENT APPLICATION PUBLICATION
(19) INDIA
(22) Date of filing of Application :10/10/2013
(21) Application No.3033/DEL/2013 A
(43) Publication Date : 17/04/2015

(54) Title of the invention : MATRIX TYPE TRANSDERMAL PATCH FORMULATIONS

(51) International classification :A61K
(31) Priority Document No :NA
(32) Priority Date :NA
(33) Name of priority country :NA
(86) International Application No :NA
Filing Date :NA
(87) International Publication No : NA
(61) Patent of Addition to Application Number :NA
Filing Date :NA
(62) Divisional to Application Number :NA
Filing Date :NA

(71)**Name of Applicant :**
1)DIRECTOR GENERAL, DEFENCE RESEARCH & DEVELOPMENT ORGANISATION
Address of Applicant :MINISTRY OF DEFENCE, GOVT. OF INDIA, DRDO BHAVAN, RAJAJI MARG, NEW DELHI-110011 Delhi India
(72)**Name of Inventor :**
1)PRONOBESH CHATTOPADHYAY
2)SUBHAM BANERJEE
3)ANIMESH GHOSH
4)VIJAY VEER

(57) Abstract :
A drug in adhesive (DIA) type transdermal patch for sustaining controlled drug/active release for the treatment of acetylcholine agonist (±) anatoxin-A poisoning involving a select combination of drug/active composed of eserine and pralidoxime chloride (2-PAM) which would facilitate controlled sustained release of the drug/active The DIA matrix type transdermal patch can be generally thin, circular, smooth, uniform and flexible in nature, and can be applied to dermal surface including (i) intact , unbroken skin (ii) skin which is open e.g. lacerated,burned,blistered and the like and (iii) mucosal tissue. Advantageously, the DIA matrix type transdermal patch against acetylcholine agonist neutotoxin poisoning is found to be effective as non-invasive type transdermal drug sustained release delivery systems for a period of upto about 72 hours.

No. of Pages : 42 No. of Claims : 16

(12) PATENT APPLICATION PUBLICATION
(19) INDIA
(22) Date of filing of Application :15/11/2011
(21) Application No.3238/DEL/2011 A
(43) Publication Date : 17/04/2015

(54) Title of the invention : SIX STROKE INTERNAL COMBUSTION ENGINE

(51) International classification :B23B
(31) Priority Document No :NA
(32) Priority Date :NA
(33) Name of priority country :NA
(86) International Application No :NA
Filing Date :NA
(87) International Publication No :NA
(61) Patent of Addition to Application Number :NA
Filing Date :NA
(62) Divisional to Application Number :NA
Filing Date :NA

(71)**Name of Applicant :**
1)NARESH KUMAR
Address of Applicant :P.O.-DHARANDHANI, MEDHPUR, TAHSIL. BAWAL, DISTT. REWARI 123412, HARYANA, INDIA
(72)**Name of Inventor :**
1)NARESH KUMAR

(57) Abstract :
A six stroke engine comprising a piston adapted to be disposed in a cylinder such that to be moved up and down upon burning of fuel in the cylinder, cams of a special shapes being provided to operate an inlet valve and an outlet valve such that to provide six strokes in one combustion wherein during, fourth stroke outlet vale is opened fully for full time and during fifth stroke the outlet valve remains open partially for some time such that to get back a little amount of exhaust gases which facilitate fifth stroke and exhaustion of the residual burnt gases completely from the cylinder during sixth stroke keeping outlet valve opened completely during sixth stroke.

No. of Pages : 17 No. of Claims : 9

(12) PATENT APPLICATION PUBLICATION
(19) INDIA
(22) Date of filing of Application :14/10/2013
(21) Application No.3052/DEL/2013 A
(43) Publication Date : 17/04/2015

(54) Title of the invention : ELECTRICAL PLUG-SOCKET ASSEMBLY

(51) International classification	:H01R, G01V
(31) Priority Document No	:NA
(32) Priority Date	:NA
(33) Name of priority country	:NA
(86) International Application No	:NA
Filing Date	:NA
(87) International Publication No	: NA
(61) Patent of Addition to Application Number	:NA
Filing Date	:NA
(62) Divisional to Application Number	:NA
Filing Date	:NA

(71)**Name of Applicant :**
1)SCHNEIDER ELECTRIC INDUSTRIES SAS
Address of Applicant :35, RUE JOSEPH MONIER, F-92500 RUEIL MALMAISON, FRANCE
(72)**Name of Inventor :**
1)KUMARESH RAMASWAMY
2)KARTHIK SATYANARAYANAN
3)BALAJI CHANDRASEKAR

(57) Abstract :
The present invention provides for a seismic and vibration proof electrical plugsocket assembly having a plug prong with hollow body ending in a recessed head inserted within the socket for making an electrical connection thereto, the socket comprising a socket insertion rod capable of being received within the recessed head for interlockably engaging and disengaging the plug prong during lock and unlock positions.

No. of Pages : 36 No. of Claims : 36

(12) PATENT APPLICATION PUBLICATION
(19) INDIA
(22) Date of filing of Application :14/10/2013
(21) Application No.3053/DEL/2013 A
(43) Publication Date : 17/04/2015

(54) Title of the invention : DETACHABLE EMERGENCY HEADLIGHT FOR 4-WHEELERS

(51) International classification :B60Q
(31) Priority Document No :NA
(32) Priority Date :NA
(33) Name of priority country :NA
(86) International Application No :NA
Filing Date :NA
(87) International Publication No : NA
(61) Patent of Addition to Application Number :NA
Filing Date :NA
(62) Divisional to Application Number :NA
Filing Date :NA

(71)**Name of Applicant :**
1)HARSHUL BALANI
Address of Applicant :A-369, PANCHSHEEL NAGAR, AJMER Rajasthan India
2)BHARAT JAIN
(72)**Name of Inventor :**
1)HARSHUL BALANI
2)BHARAT JAIN

(57) Abstract :
A device is useful to make the roadahead visible with the help of emergency headlight, at the situation when it is dark due to the absence of street lights or if there is a break off or any electrical problem in inbuilt headlamps of a car, is disclosed. The device is a detachable emergency headlight consists of asingle adjustable and chargeable headlight(1) fixed permanently to the magnetic plate(2) which can be attached easily on the bonnet(4) of the car with the help of strong magnetic field attraction, and can also be detached easily. By using this device on the car, we can make the road visible for the driver and can help in safe driving.

No. of Pages : 6 No. of Claims : 8

(12) PATENT APPLICATION PUBLICATION
(19) INDIA
(22) Date of filing of Application :09/10/2013
(21) Application No.3012/DEL/2013 A
(43) Publication Date : 17/04/2015

(54) Title of the invention : TOOTH ANATOMY MODEL AND DEMONSTRATION METHOD

(51) International classification :A61K
(31) Priority Document No :NA
(32) Priority Date :NA
(33) Name of priority country :NA
(86) International Application No :NA
Filing Date :NA
(87) International Publication No : NA
(61) Patent of Addition to Application Number :NA
Filing Date :NA
(62) Divisional to Application Number :NA
Filing Date :NA

(71)**Name of Applicant :**
1)COLGATE PALMOLIVE COMPANY
Address of Applicant :300 PARK AVENUE, NEW YORK 10022, USA U.S.A.
(72)**Name of Inventor :**
1)NEELIMA UTGIKAR
2)RAVI SUBRAMANYAM
3)SHASHANK POTNIS
4)NIKHIL KHEUR

(57) Abstract :
The present application provides a tooth anatomy model comprising: a first layer representing tooth dentin, said first layer being made of a first material; and a sensor system associated with a surface of the first layer, which system is adapted to sense at least one of temperature and air pressure. The present application also provides a method of demonstrating tooth hypersensitivity using a tooth anatomy model.

No. of Pages : 34 No. of Claims : 83

(12) PATENT APPLICATION PUBLICATION
(19) INDIA
(22) Date of filing of Application :28/03/2013
(21) Application No.1177/MUM/2013 A
(43) Publication Date : 17/04/2015

(54) Title of the invention : STABLE PHARMACEUTICAL COMPOSITION OF TADALAFIL.

(51) International classification	:A61K31/49, A61K31/4985, A61K31/519, A61
(31) Priority Document No	:NA
(32) Priority Date	:NA
(33) Name of priority country	:NA
(86) International Application No	:NA
Filing Date	:NA
(87) International Publication No	: NA
(61) Patent of Addition to Application Number	:NA
Filing Date	:NA
(62) Divisional to Application Number	:NA
Filing Date	:NA

(71)**Name of Applicant :**
1)ASTRON RESEARCH LIMITED
Address of Applicant :10TH FLOOR, PREMIER HOUSE, BODAKDEV, OPP. GURUDWARA SARKHEJ - GANDHINAGAR HIGHWAY, AHMEDABAD 380054, GUJARAT, INDIA
(72)**Name of Inventor :**
1)M PAVAN KUMAR
2)ASHUTOSH JAMLOKI
3)SAUTIK BHATTACHARYA
4)ASHISH SEHGEL

(57) Abstract :
The present invention relates to stable pharmaceutical compositions of Tadalafil for oral administration comprising tadalafil particles having D90 particle si/.e greater than about 40 µm and one or more pharmaceutically acceptable excipienls, Further the present invention also discloses the process for the preparation of the said stable pharmaceutical composition.

No. of Pages : 17 No. of Claims : 10

(12) PATENT APPLICATION PUBLICATION
(19) INDIA
(22) Date of filing of Application :28/03/2013
(21) Application No.1178/MUM/2013 A
(43) Publication Date : 17/04/2015

(54) Title of the invention : INSERT OVER MOLDED STRUCTURAL RUNNING BOARD STANDARDIZED FOR SPORT UTILITY VEHICLE AND PICKUP TRUCKS

(51) International classification	:B60R3/00
(31) Priority Document No	:NA
(32) Priority Date	:NA
(33) Name of priority country	:NA
(86) International Application No	:NA
Filing Date	:NA
(87) International Publication No	: NA
(61) Patent of Addition to Application Number	:NA
Filing Date	:NA
(62) Divisional to Application Number	:NA
Filing Date	:NA

(71)**Name of Applicant :**
1)MAHINDRA & MAHINDRA LIMITED
Address of Applicant :R & D CENTER, AUTO SECTOR, 89, M.I.D.C., SATPUR, NASHIK - 422007, MAHARASHTRA, INDIA
(72)**Name of Inventor :**
1)DINESH DNYANESHWAR WELUKAR

(57) Abstract :
Disclosed is a running board assembly for an automobile, which comprises of a board, an insert body and a plurality of brackets. The board has a plurality of grooves configured thereon. The insert body includes an insert adaptably assembled with a pin therewith. The pin of the insert body acts as a cantilever supporting the insert at one end and other free end for connecting with a plurality of holes on an automobile body. Each bracket of the plurality of brackets has a first end secured with the pin of the insert body and a second end configuring a plurality of holes for selectively engaging with the plurality of holes on the automobile body. Upon stepping of a passenger on of the board, the board adaptably facilitates even distribution of load from the insert body to the plurality of brackets further to plurality of holes on the automobile body.

No. of Pages : 27 No. of Claims : 8

(12) PATENT APPLICATION PUBLICATION
(19) INDIA
(22) Date of filing of Application :28/03/2013
(21) Application No.1179/MUM/2013 A
(43) Publication Date : 17/04/2015

(54) Title of the invention : ELECTRIC WATER PUMP CONTROL ARCHITECTURE FOR LOW TEMPERATURE COOLING SYSTEM IN HYBRID ELECTRIC VEHICLES

(51) International classification	:B60K11/02, F01P11/16, F01P7/16
(31) Priority Document No	:NA
(32) Priority Date	:NA
(33) Name of priority country	:NA
(86) International Application No	:NA
Filing Date	:NA
(87) International Publication No	: NA
(61) Patent of Addition to Application Number	:NA
Filing Date	:NA
(62) Divisional to Application Number	:NA
Filing Date	:NA

(71)**Name of Applicant :**
1)MAHINDRA & MAHINDRA LIMITED
Address of Applicant :R & D CENTER, AUTO SECTOR, 89, M.I.D.C., SATPUR, NASHIK - 422 007, MAHARASHTRA, INDIA
(72)**Name of Inventor :**
1)NABAL K. PANDEY
2)SATISH V. THIMMALAPURA
3)C. NANDAGOPALAN
4)PALANIVELU PRABAHARAN
5)ARAVAPALLI SRINIWAS

(57) Abstract :
Disclosed is a cooling system for hybrid electric vehicles. The cooling system comprises a heat generation source/power electronics module, a first radiator, a second radiator, a radiator fan, a pump, a sensor and a controller. The cooling system a closed coolant loop system and uses a component de-rating based concept. The present invention provides an independent, low temperature, dedicated cooling system for power electronics.

No. of Pages : 17 No. of Claims : 8

(12) PATENT APPLICATION PUBLICATION
(19) INDIA
(22) Date of filing of Application :28/03/2013
(21) Application No.1230/MUM/2013 A
(43) Publication Date : 17/04/2015

(54) Title of the invention : DIESEL FUEL FEED SYSTEM

(51) International classification :C10G1/00
(31) Priority Document No :13/438563
(32) Priority Date :03/04/2012
(33) Name of priority country :U.S.A.
(86) International Application No :NA
Filing Date :NA
(87) International Publication No : NA
(61) Patent of Addition to Application Number :NA
Filing Date :NA
(62) Divisional to Application Number :NA
Filing Date :NA

(71)**Name of Applicant :**
1)DEERE & COMPANY
Address of Applicant :ONE JOHN DEERE PLACE, MOLINE, ILLINOIS, 61265-8098, USA U.S.A.
(72)**Name of Inventor :**
1)HERBST GARRICK W
2)VANDIKE NATHAN R
3)RIECK STEVEN T
4)VAN HAL TODD E

(57) Abstract :
A diesel fuel feed system comprises a diesel engine (100); a fuel cooler (102); a fuel tank (106); and a makeup valve (104).

No. of Pages : 13 No. of Claims : 18

(12) PATENT APPLICATION PUBLICATION
(19) INDIA
(22) Date of filing of Application :22/06/2013
(21) Application No.1230/MUMNP/2013 A
(43) Publication Date : 17/04/2015

(54) Title of the invention : MODIFIED PEPTIDES WITH ANTIVIRAL PROPERTIES AND METHOD FOR THE PRODUCTION THEREOF

(51) International classification :C07K2/00,C07K1/12,C12P21/06
(31) Priority Document No :NA
(32) Priority Date :NA
(33) Name of priority country :NA
(86) International Application No :PCT/RU2010/000701
Filing Date :22/11/2010
(87) International Publication No :WO 2012/070975
(61) Patent of Addition to Application Number :NA
Filing Date :NA
(62) Divisional to Application Number :NA
Filing Date :NA

(71)**Name of Applicant :**
1)FARBER Boris Slavinovich
Address of Applicant :Kutuzovskij pr t 24 130A Moscow 121151 Russia
2)FARBER Sofya Borisovna
3)MARTYNOV Artur Viktorovich
(72)**Name of Inventor :**
1)FARBER Boris Slavinovich
2)FARBER Sofya Borisovna
3)MARTYNOV Artur Viktorovich

(57) Abstract :
The invention can be used in medicine and veterinary science to create a drug which can be used effectively in oral from in the treatment of a plurality of viral infections such as influenza herpes and cytomegalovirus. The modified peptides with antiviral properties and the method for the production thereof are characterized in that the main active agent is a mixture (ensemble) of oligopeptides that are the products of protein hydrolysis and the charges of the molecules of which are changed to an opposite charge and that in order to produce said oligopeptides first the partial hydrolysis of a protein containing raw material is carried out then a process of chemical modification of the sum of the resultant oligopeptides is carried out with the charge of the molecules thereof being changed to an opposite charge; a composition consisting of the resultant oligopeptides is used as the antiviral agent. This sum of modified oligopeptides is capable of inhibiting the activity of the importin beta heterodimer of a cell and inhibiting the replication of viruses with a replication cycle that is dependent on the functions of the nucleus. The ensemble of modified oligopeptides based on a dynamic self organizing system is effective in the treatment of viral infections such as influenza herpes and animal disease viruses at all stages in the development of the infectious process when other drugs are ineffective. The agent has a broad spectrum of action and low toxicity is suitable for industrial production and is effective at all stages in the replication cycle of viruses with a replication cycle that is dependent on the cellular nucleus.

No. of Pages : 23 No. of Claims : 14

(12) PATENT APPLICATION PUBLICATION
(19) INDIA
(22) Date of filing of Application :04/04/2013
(21) Application No.1308/MUM/2013 A
(43) Publication Date : 17/04/2015

(54) Title of the invention : FLEXIBLE DISPLAY APPARATUS AND METHOD FOR CONTROLLING THEREOF

(51) International classification	:G06F3/041
(31) Priority Document No	:10-2012-0036471
(32) Priority Date	:08/04/2012
(33) Name of priority country	:Republic of Korea
(86) International Application No	:NA
Filing Date	:NA
(87) International Publication No	: NA
(61) Patent of Addition to Application Number	:NA
Filing Date	:NA
(62) Divisional to Application Number	:NA
Filing Date	:NA

(71)**Name of Applicant :**
1)Samsung Electronics Co., Ltd.
Address of Applicant :129, Samsung-ro, Yeongtong-gu, Suwon-si, Gyeonggi-do, 443-742, Republic of Korea
(72)**Name of Inventor :**
1)Ji-hyun JUNG
2)Kyung-a KANG
3)Han-sung LEE
4)Geun-ho LEE

(57) Abstract :
A flexible display apparatus may display a graphical user interface (GUI) indicating a deformation gesture associated with a function executed when the deformation gesture is performed. Accordingly, a user may easily control the flexible display apparatus to perform functions using the deformation gesture.

No. of Pages : 175 No. of Claims : 15

(12) PATENT APPLICATION PUBLICATION
(19) INDIA
(22) Date of filing of Application :12/04/2013
(21) Application No.1370/MUM/2013 A
(43) Publication Date : 17/04/2015

(54) Title of the invention : SPECTROPHOTOMETRIC REAL TIME METHOD FOR ASSESSMENT OF FIBRINOLYTIC ACTIVITY

(51) International classification	:G01N21/31, G01N21/35
(31) Priority Document No	:NA
(32) Priority Date	:NA
(33) Name of priority country	:NA
(86) International Application No	:NA
Filing Date	:NA
(87) International Publication No	: NA
(61) Patent of Addition to Application Number	:NA
Filing Date	:NA
(62) Divisional to Application Number	:NA
Filing Date	:NA

(71)**Name of Applicant :**
1)Dhananjay M. Kulkarni
Address of Applicant :BITS Pilani KK Birla Goa Campus NH 17B Bypass road Zuarinagar Vasco da Gama Goa Goa India
(72)**Name of Inventor :**
1)Dibakar Chakrabarty
2)Mansi Baveja
3)Pereira Clarice Genevive
4)Chandrasekhar Chanda
5)Akriti Rastogi
6)Jigni Sayeda Pathan

(57) Abstract :
The present invention deals with a spectrophotometric method to quantify fibrin clot formation and fibrinolytic activity sequentially with real time monitoring. This method is useful for assessment of fibrinolytic capacity of any compound. Its novelty lies in the simplicity of protocol, cost effectiveness, high sensitivity and reproducibility.

No. of Pages : 22 No. of Claims : 10

(12) PATENT APPLICATION PUBLICATION
(19) INDIA
(22) Date of filing of Application :12/04/2013
(21) Application No.1371/MUM/2013 A
(43) Publication Date : 17/04/2015

(54) Title of the invention : A METHOD OF VIDEO INTERACTION USING A SOCIAL COMPUTING BASED COMMUNITY AND AN ASSOCIATED SERVICE.

(51) International classification	:G06F17/30, H04N7/24
(31) Priority Document No	:NA
(32) Priority Date	:NA
(33) Name of priority country	:NA
(86) International Application No	:NA
Filing Date	:NA
(87) International Publication No	: NA
(61) Patent of Addition to Application Number	:NA
Filing Date	:NA
(62) Divisional to Application Number	:NA
Filing Date	:NA

(71)**Name of Applicant :**
1)AMIT KUMAR JAIN
Address of Applicant :F1402, ROYAL CLASSIC BUILDING, LINK ROAD, ANDHERI WEST Maharashtra India
(72)**Name of Inventor :**
1)AMIT KUMAR JAIN

(57) Abstract :
The present invention is a method of video interaction using electronic devices (100) The method comprises : creation of at least one user account by a user wherein said user account comprises three inter connected interfaces - a profile interface (106), a camera interface (109) and a chat interface (108) ,and said user account is associated with a service.The method also involves integrating said user into a social computing based community wherein said social computing based community comprises a plurality of users having accounts associated with said service, and said user and said plurality of users can interact and communicate with each other.The method implements using said camera interface (109) for enabling said user to record a plurality of videos (101), play and view a plurality of videos that are recorded,tag said recorded videos (101) and share said recorded videos (101) with other users of said social computing based community.The method involves using said camera interface (109) for enabling said user to operate a set of camera controls. The method further involves using said chat interface (108) for enabling said user to communicate and interact with other users integrated into said social computing based community by implementing video based communication and interaction.The method enables said user to set a self destruction parameter (102) associated with a recorded video (lOl)wherein said user sets a time interval after which said recorded video self-destroys and is no longer available for viewing in said social computing based community.The method implements using said profile interface (106) for providing said user a list of contacts .The method also involves using said profile interface (106) for enabling said user to provide information associated with said user and share said information with said other users integrated into said social computing based community, viewing and manage his/her list of contacts, manage settings associated with said user account and view statistical information associated with said user account.The method implements using said profile interface (106) for providing a profile to said user wherein said information associated with said user is presented to be viewed by all users integrated into said social computing based community. The method also involves providing a space in said user account wherein said user can archieve and curate videos and other information that he comes across in said social computing based community and said videos and other information put up on said space in said user account can be viewed by others.

No. of Pages : 48 No. of Claims : 16

(12) PATENT APPLICATION PUBLICATION
(19) INDIA
(22) Date of filing of Application :28/04/2013
(21) Application No.1198/MUM/2013 A
(43) Publication Date : 17/04/2015

(54) Title of the invention : OIL FILTRATION AND COOLING MODULE IN ENGINE

(51) International classification	:F01M11/03, F01P11/08
(31) Priority Document No	:NA
(32) Priority Date	:NA
(33) Name of priority country	:NA
(86) International Application No	:NA
Filing Date	:NA
(87) International Publication No	: NA
(61) Patent of Addition to Application Number	:NA
Filing Date	:NA
(62) Divisional to Application Number	:NA
Filing Date	:NA

(71)**Name of Applicant :**
1)MAHINDRA & MAHINDRA LIMITED
Address of Applicant :R & D CENTER, AUTOMOTIVE SECTOR, 89, M.I.D.C., SATPUR, NASHIK-422 007, MAHARASHTRA, INDIA.
(72)**Name of Inventor :**
1)V. VIKRAMAN
2)PRAKASH PRATEEK
3)PARAG N. DAITHANKAR
4)RAMASAMY VELUSAMY

(57) Abstract :
Compact and integrated oil filtration and cooling module comprising of oil Filtration unit, oil Cooling unit, Coolant Pump, Thermostat, by-pass passage, High pressure water connection to EGR cooler, Cabin Heater Water Outlet connection back to Water Pump and High pressure Oil supply to Turbocharger

No. of Pages : 17 No. of Claims : 4

(12) PATENT APPLICATION PUBLICATION
(19) INDIA
(22) Date of filing of Application :29/03/2013

(21) Application No.1253/MUM/2013 A
(43) Publication Date : 17/04/2015

(54) Title of the invention : AN ELECTRONIC READER FOR ENHANCING INTERACTIVE ONLINE LEARNING EXPERIENCE

(51) International classification	:G06F3/048, G09B5/06, G11C7/16
(31) Priority Document No	:61/618,500
(32) Priority Date	:30/03/2012
(33) Name of priority country	:U.S.A.
(86) International Application No	:NA
Filing Date	:NA
(87) International Publication No	: NA
(61) Patent of Addition to Application Number	:NA
Filing Date	:NA
(62) Divisional to Application Number	:NA
Filing Date	:NA

(71)**Name of Applicant :**
1)LoudCloud Systems Inc.
Address of Applicant :5720 Lyndon B Johnson Freeway Suite 123, Dallas, TX 75240, United States of America U.S.A.
(72)**Name of Inventor :**
1)KUTTY, Manoj
2)SONKAR, Anil Vishwanath
3)WARRIER, Dinesh Madhavan

(57) Abstract :
Disclosed is a method and system for enabling an electronic reader embedded on e-learning system. The system comprises a Graphical User Interface (GUI) module, a receiving module, a capturing module, a generating module, a database and a communication module. The GUI module is configured to display a first content object on the electronic content reader to one or more users connected on the online e-learning platform. The receiving module is configured to receive an electronic input signal from a user to highlight a first sub-content object in the first content object. The capturing module is configured to capture first metadata associated with the first sub-content object. The generating module is configured to generate a second content object comprising the first sub-content highlighted based on the first metadata. The database is configured for storing the second content object. The communication module is configured to share the second content object to another user in real-time.

No. of Pages : 25 No. of Claims : 13

(12) PATENT APPLICATION PUBLICATION
(19) INDIA
(22) Date of filing of Application :29/03/2013
(21) Application No.1254/MUM/2013 A
(43) Publication Date : 17/04/2015

(54) Title of the invention : METHOD AND SYSTEM FOR EVALUATING CONTENT OBJECTS PUBLISHED ON A COLLABORATIVE PLATFORM

(51) International classification :G06F17/30
(31) Priority Document No :61/618,522
(32) Priority Date :30/03/2012
(33) Name of priority country :U.S.A.
(86) International Application No :NA
Filing Date :NA
(87) International Publication No : NA
(61) Patent of Addition to Application Number :NA
Filing Date :NA
(62) Divisional to Application Number :NA
Filing Date :NA

(71)**Name of Applicant :**
1)LoudCloud Systems Inc.
Address of Applicant :5720 Lyndon B Johnson Freeway Suite 123, Dallas, TX 75240, United States of America U.S.A.
(72)**Name of Inventor :**
1)KUTTY, Manoj
2)SONKAR, Anil Vishwanath
3)TATIMATLA, Ramesh Babu Chowdaiah
4)WARRIER, Dinesh Madhavan

(57) Abstract :
Disclosed is a method and system for evaluating at least one content object received from at least one user through an input module in a collaborative platform. The system comprises an analyzing module, a publishing module, an evaluation module and a display module. The analyzing module is configured to detect whether the at least one content object is extraneous. The publishing module is configured to publish the at least one content object not detected as extraneous. After publishing, the evaluation module verifies whether the at least one content object or any other content object has been previously published by the at least one user. Based on the verification, the evaluation module selectively enables at least one other user to assign a preliminary score or a secondary score the at least one content object and to optionally mark the at least one content object assigned with the secondary score as ˜substantive™.

No. of Pages : 26 No. of Claims : 9

(12) PATENT APPLICATION PUBLICATION
(19) INDIA
(22) Date of filing of Application :07/07/2014
(21) Application No.1376/MUMNP/2014 A
(43) Publication Date : 17/04/2015

(54) Title of the invention : MODIFIED PEPTIDES AND THEIR USE FOR TREATING AUTOIMMUNE DISEASES

(51) International classification :A61K38/04,C07K7/08
(31) Priority Document No :NA
(32) Priority Date :NA
(33) Name of priority country :NA
(86) International Application No :PCT/IB2011/003256
Filing Date :13/12/2011
(87) International Publication No :WO 2013/088194
(61) Patent of Addition to Application Number :NA
Filing Date :NA
(62) Divisional to Application Number :NA
Filing Date :NA

(71)**Name of Applicant :**
1)CENTRE NATIONAL DE LA RECHERCHE SCIENTIFIQUE
Address of Applicant :3 rue Michel Ange F 75794 Paris Cedex 16 France
2)IMMUPHARMA FRANCE SA
(72)**Name of Inventor :**
1)MULLER Sylviane
2)BRIAND Jean Paul
3)ZIMMER Robert

(57) Abstract :
The present invention relates to a peptide or a salt thereof comprising or consisting of the amino acid sequence IHMVYSKRSGKPRGYAFIEY comprising one or more post translational modifications.

No. of Pages : 37 No. of Claims : 9

(12) PATENT APPLICATION PUBLICATION
(19) INDIA
(22) Date of filing of Application :07/07/2014
(21) Application No.1377/MUMNP/2014 A
(43) Publication Date : 17/04/2015

(54) Title of the invention : METHOD FOR PREPARING AMORPHOUS PRECIPITATED PROTEIN PARTICLES

(51) International classification :A61K9/14,A61K47/12,A61K47/18
(31) Priority Document No :1122408.6
(32) Priority Date :23/12/2011
(33) Name of priority country :U.K.
(86) International Application No :PCT/GB2012/053265
Filing Date :24/12/2012
(87) International Publication No :WO 2013/093524
(61) Patent of Addition to Application Number :NA
Filing Date :NA
(62) Divisional to Application Number :NA
Filing Date :NA

(71)**Name of Applicant :**
1)UNIVERSITY OF STRATHCLYDE
Address of Applicant :McCance Building 16 Richmond Street Glasgow G2 1XQ, United Kingdom
(72)**Name of Inventor :**
1)VOS Jan
2)MACLEOD Andrew John
3)MOORE Barry Douglas

(57) Abstract :
The present invention relates to the provision of a novel method for preparing dry amorphous precipitated protein particles. In particular to a method provides amorphous precipitated protein particles suitable for use in dry protein formulations which can be reconstituted to provide clear foam free concentrated protein solutions.

No. of Pages : 33 No. of Claims : 22

(12) PATENT APPLICATION PUBLICATION
(19) INDIA
(22) Date of filing of Application :12/04/2013

(21) Application No.1381/MUM/2013 A
(43) Publication Date : 17/04/2015

(54) Title of the invention : BATTERY AND SUPER CAPACITOR COMBINATION IN ELECTRIC BIKE

(51) International classification	:B60K 1/04, B60K 7/00
(31) Priority Document No	:NA
(32) Priority Date	:NA
(33) Name of priority country	:NA
(86) International Application No	:NA
Filing Date	:NA
(87) International Publication No	: NA
(61) Patent of Addition to Application Number	:NA
Filing Date	:NA
(62) Divisional to Application Number	:NA
Filing Date	:NA

(71)**Name of Applicant :**
1)G.H.RAISONI COLLEGE OF ENGINEERING
Address of Applicant :CRPF Gate No. 3,Digdoh Hills,Hingna Road,Nagpur Maharashtra-440016 Maharashtra India
2)G.H.R. Labs and Research Centre
(72)**Name of Inventor :**
1)Anurag Bisen
2)Nikhil Hatwar
3)Haren Dodke
4)Akshay Junghare
5)ayush pushkar
6)Dr. M M Khanapurkar

(57) Abstract :
The market for electric bikes, scooters and bicycles is growing. And there are numerous brands of E-bikes emerging locally. All most all incorporate a rear wheel BLDC hub motor; lead acid battery pack, a light weight chassis, a controller. And with this in general they all achieve average speed of 30-50km/hr, range of 70km/charge. And other drawback with them is the long charging time of 6-8 hrs and short lifespan of battery pack i.e. around 2 years. Considering these limitations we are designing an electric bike which will give a better performance with the use of a hybrid system of battery and supercapacitor. Supercapacitor module will provide the high current required during starting and acceleration, and eventfully will help increasing lifespan of battery. A secondary source, like regenerative braking or a small solar panel module could be availed onboard so as to charge battery/ supercapacitor. Following invention is described in detail with the help of Figure 1 of Sheet 1 showing proposed model of present invention, Figure 2 of Sheet 1 showing flow chart of proposed algorithm, Figure 3 of Sheet 2 showing bi directional buck-boost converter, Figure 4 of Sheet 2 showing Supercapacitor bank charging simulation circuit.

No. of Pages : 12 No. of Claims : 5

(12) PATENT APPLICATION PUBLICATION
(19) INDIA
(22) Date of filing of Application :08/07/2014
(21) Application No.1381/MUMNP/2014 A
(43) Publication Date : 17/04/2015

(54) Title of the invention : RECONSTITUTION METHOD FOR HIGH CONCENTRATION DRY PROTEIN FORMULATIONS

(51) International classification :A61K9/00,A61K35/00
(31) Priority Document No :1122430.0
(32) Priority Date :23/12/2011
(33) Name of priority country :U.K.
(86) International Application No :PCT/GB2012/053266
Filing Date :24/12/2012
(87) International Publication No :WO 2013/093525
(61) Patent of Addition to Application Number :NA
Filing Date :NA
(62) Divisional to Application Number :NA
Filing Date :NA

(71)**Name of Applicant :**
1)XSTALBIO LIMITED
Address of Applicant :CIDS Thomson Building University Avenue Glasgow G12 8QQ, United Kingdom
(72)**Name of Inventor :**
1)VOS Jan
2)MACLEOD Andrew John

(57) Abstract :
The present invention relates to the provision of a novel method for the reconstitution of dry formulations comprising biomolecules and in particular to dry protein formulations and to pharmaceutical or veterinary products suitable for parenteral administration containing reconstituted formulations prepared according to the novel method of the invention.

No. of Pages : 30 No. of Claims : 15

(12) PATENT APPLICATION PUBLICATION
(19) INDIA
(22) Date of filing of Application :15/04/2013
(21) Application No.1382/MUM/2013 A
(43) Publication Date : 17/04/2015

(54) Title of the invention : ARM SPACING CHANGE MECHANISM FOR CRANKSHAFT MICROFINISHING MACHINE

(51) International classification	:B24B 5/00, B24B 49/00
(31) Priority Document No	:NA
(32) Priority Date	:NA
(33) Name of priority country	:NA
(86) International Application No	:NA
Filing Date	:NA
(87) International Publication No	: NA
(61) Patent of Addition to Application Number	:NA
Filing Date	:NA
(62) Divisional to Application Number	:NA
Filing Date	:NA

(71)**Name of Applicant :**
1)GRIND MASTER MACHINES PVT. LTD.
Address of Applicant :B10/B11/B14, M.I.D.C., RAILWAY STATION, AURANGABAD - 431005, MAHARASHTRA, INDIA
(72)**Name of Inventor :**
1)MILIND DINKAR KELKAR

(57) Abstract :
Disclosed is an automatic arm spacing arrangement for a crankshaft microfinishing machine. The crankshaft microfinishing machine comprises a headstock unit, a tailstock unit, an arm-pack and a film management system including a film indexer. The arm-pack includes a plurality of microfinishing arm units and an arm spacer. The arm spacer includes an automatic actuation mechanism. The automatic actuation mechanism includes a hydraulic cylinder. The motion of the hydraulic cylinder causes engagement and disengagement of a plurality of first set of cams with a plurality of second set of cams resulting in different configurations thereby changing the distance between the plurality of microfinishing arm units.

No. of Pages : 16 No. of Claims : 3

(12) PATENT APPLICATION PUBLICATION
(19) INDIA
(22) Date of filing of Application :08/07/2014

(21) Application No.1382/MUMNP/2014 A
(43) Publication Date : 17/04/2015

(54) Title of the invention : SIMETHICONE FORMULATION

(51) International classification :A61K9/20,A61K31/451,A61K31/445
(31) Priority Document No :11193452.7
(32) Priority Date :14/12/2011
(33) Name of priority country :EPO
(86) International Application No :PCT/NL2012/050879
Filing Date :11/12/2012
(87) International Publication No :WO 2013/095111
(61) Patent of Addition to Application Number :NA
Filing Date :NA
(62) Divisional to Application Number :NA
Filing Date :NA

(71)**Name of Applicant :**
1)DISPHAR INTERNATIONAL B.V.
Address of Applicant :Winkelskamp 6 NL 7255 PZ Hengelo Netherlands
(72)**Name of Inventor :**
1)VELADA Jos Luis
2)DOSHI Hiteshkumar Anilkant
3)TENDULKAR Anjali Rajesh
4)SHINDE Vicky

(57) Abstract :
The present invention relates to solid pharmaceutical formulations based on simethicone and calcium phosphate and mannitol.

No. of Pages : 20 No. of Claims : 12

(12) PATENT APPLICATION PUBLICATION
(19) INDIA
(22) Date of filing of Application :15/04/2013

(21) Application No.1383/MUM/2013 A
(43) Publication Date : 17/04/2015

(54) Title of the invention : FILM SLACK AND TENSIONING MECHANISM FOR MICROFINISHING MACHINE

(51) International classification	:B24B 21/00, B24B 17/00	(71)**Name of Applicant :** **1)GRIND MASTER MACHINES PVT. LTD.** Address of Applicant :B10/B11/B14, MIDC, RAILWAY STATION, AURANGABAD 431005 MAHARASHTRA, INDIA
(31) Priority Document No	:NA	(72)**Name of Inventor :**
(32) Priority Date	:NA	**1)MILIND DINKAR KELKAR**
(33) Name of priority country	:NA	
(86) International Application No	:NA	
Filing Date	:NA	
(87) International Publication No	: NA	
(61) Patent of Addition to Application Number	:NA	
Filing Date	:NA	
(62) Divisional to Application Number	:NA	
Filing Date	:NA	

(57) Abstract :
Disclosed is a method of slacking and tensioning a film for a microfinishing machine. The microfinishing machine comprises a roll of film, a plurality of rollers, an arm-pack and a slack and indexing unit. The slack and indexing unit comprises a pneumatic cylinder/slacker that moves upward and downward to create and remove a slack in the roll of film. The method of the present invention does not require retraction of the arm-pack and generation of the slack-tension effect, as a result saves considerable amount of cycle time.

No. of Pages : 12 No. of Claims : 1

(12) PATENT APPLICATION PUBLICATION
(19) INDIA
(22) Date of filing of Application :29/03/2013
(21) Application No.1255/MUM/2013 A
(43) Publication Date : 17/04/2015

(54) Title of the invention : AN ELECTRONIC ASSIGNMENT MANAGEMENT SYSTEM FOR ONLINE LEARNING PLATFORM

(51) International classification	:G06F17/30, G06Q30/04
(31) Priority Document No	:61/618,532
(32) Priority Date	:30/03/2012
(33) Name of priority country	:India
(86) International Application No	:NA
Filing Date	:NA
(87) International Publication No	: NA
(61) Patent of Addition to Application Number	:NA
Filing Date	:NA
(62) Divisional to Application Number	:NA
Filing Date	:NA

(71)**Name of Applicant :**
1)LoudCloud Systems Inc.
Address of Applicant :5720 Lyndon B Johnson Freeway Suite 123, Dallas, TX 75240, United States of America
(72)**Name of Inventor :**
1)KUTTY, Manoj
2)SONKAR, Anil Vishwanath
3)KAMAT, Krishnaparag Prakash

(57) Abstract :
Disclosed is a method and system for evaluating performance of at least one first-user on an online platform. A course-builder module enables a second-user to create at least one assignment and to define a set of assessment criteria for assessing the at least one assignment. After creating the at least one assignment, a course-attempting module is configured to enable a first-user to attempt and submit the at least one assignment. Once the at least one assignment is submitted by the first-user, a similarity-check module is configured to apply a similarity-check algorithm on the submitted assignment to automatically generate a report having a score quantifying similarity of the assignment with a content from an online source. Upon applying the similarity-check, a grading module is configured to evaluate the performance of the first-user by assigning a grade to the assignment on the basis of the predefined set of criteria.

No. of Pages : 21 No. of Claims : 11

(12) PATENT APPLICATION PUBLICATION
(19) INDIA
(22) Date of filing of Application :30/03/2013
(21) Application No.1256/MUM/2013 A
(43) Publication Date : 17/04/2015

(54) Title of the invention : BENZIL DERIVATIVES AS PHOTOSTABILIZERS

(51) International classification	:C07D471/04, C07D401/06,
(31) Priority Document No	:NA
(32) Priority Date	:NA
(33) Name of priority country	:NA
(86) International Application No	:NA
Filing Date	:NA
(87) International Publication No	: NA
(61) Patent of Addition to Application Number	:NA
Filing Date	:NA
(62) Divisional to Application Number	:NA
Filing Date	:NA

(71)**Name of Applicant :**
1)Pradeep T. Deota
Address of Applicant :Applied Chemistry Department, Faculty of Technology & Engineering, The Maharaja Sayajirao University of Baroda, Post box no. 51, Kalabhavan, Vadodara-390001 Gujarat, India.
(72)**Name of Inventor :**
1)Pradeep T. Deota
2)Hemant S. Parmar
3)Gautam M. Patel

(57) Abstract :
The present invention relates to novel benzil derivative compound of Formula I, , wherein R is C1-12 alkyl group provided that R is C1, C2 and C8 alkyl group. It also provides compound of Formula-1, wherein R is C1-12 alkyl as photostabilizer compounds having enhanced photostabilizing effect. It further provides use of compound of Formula-1, wherein R is C1, C2 and C8 alkyl as photostabilizer compounds.

No. of Pages : 22 No. of Claims : 2

(12) PATENT APPLICATION PUBLICATION
(19) INDIA
(22) Date of filing of Application :08/07/2014
(21) Application No.1379/MUMNP/2014 A
(43) Publication Date : 17/04/2015

(54) Title of the invention : DEVICE AND METHOD TO CONTROL THE CHARGE IN ELECTRIC ARC FURNACES

(51) International classification :F27B3/08,F27B3/18,F27B3/28
(31) Priority Document No :UD2011A000216
(32) Priority Date :29/12/2011
(33) Name of priority country :Italy
(86) International Application No :PCT/IB2012/002806
Filing Date :28/12/2012
(87) International Publication No :WO 2013/098636
(61) Patent of Addition to Application Number :NA
Filing Date :NA
(62) Divisional to Application Number :NA
Filing Date :NA

(71)**Name of Applicant :**
1)DANIELI AUTOMATION SPA
Address of Applicant :Via Bonaldo Stringher 4 I 33042 Buttrio Italy
(72)**Name of Inventor :**
1)DELLA VEDOVA Ferruccio
2)OMETTO Marco

(57) Abstract :
Device to control the feed of the metal charge (35) in an electric arc furnace (1 1) comprising a conveyor (15) associated at the end to a feed mouth (14) provided in said electric arc furnace (11) and in cooperation with the conveyor (15) at least a system to detect the point by point profile of the metal charge (35) present on the conveyor (15).

No. of Pages : 16 No. of Claims : 13

(12) PATENT APPLICATION PUBLICATION
(19) INDIA
(22) Date of filing of Application :08/07/2014
(21) Application No.1380/MUMNP/2014 A
(43) Publication Date : 17/04/2015

(54) Title of the invention : METHOD AND APPARATUS FOR WHITE SPACE OPERATION BY A MOBILE ENTITY

(51) International classification	:H04W12/08,H04W16/14,H04W48/12
(31) Priority Document No	:61/593,792
(32) Priority Date	:01/02/2012
(33) Name of priority country	:U.S.A.
(86) International Application No	:PCT/US2013/024513
Filing Date	:01/02/2013
(87) International Publication No	:WO 2013/116784
(61) Patent of Addition to Application Number	:NA
Filing Date	:NA
(62) Divisional to Application Number	:NA
Filing Date	:NA

(71)**Name of Applicant :**
1)QUALCOMM INCORPORATED
Address of Applicant :Attn: International IP Administration 5775 Morehouse Drive San Diego California 92121 1714 U.S.A.
(72)**Name of Inventor :**
1)HORN Gavin Bernard
2)PRAKASH Rajat

(57) Abstract :
A method by an access point for wireless communication service includes receiving configuration parameters from a core network entity for operation as a base station using at least one non white space (non WS) bandwidth (2310). The method further includes determining whether the received configuration parameters comprise an indication for the access point to use white space (WS) for the service (2320). The method further includes requesting authorization information from a WS database to operate in the WS in response to the received parameters comprising the indication (2330). An access point comprising a processor memory and transceiver may be configured to perform the elements of the method using a computer readable storage medium or other means.

No. of Pages : 63 No. of Claims : 24

(12) PATENT APPLICATION PUBLICATION
(19) INDIA
(22) Date of filing of Application :17/04/2013
(21) Application No.1440/MUM/2013 A
(43) Publication Date : 17/04/2015

(54) Title of the invention : A NOVEL TRANSITION METAL BASED POLYMERIZATION CATALYST AND A PROCESS FOR PREPARATION THEREOF

(51) International classification	:B01J 23/00, B01J 31/00
(31) Priority Document No	:NA
(32) Priority Date	:NA
(33) Name of priority country	:NA
(86) International Application No	:NA
Filing Date	:NA
(87) International Publication No	: NA
(61) Patent of Addition to Application Number	:NA
Filing Date	:NA
(62) Divisional to Application Number	:NA
Filing Date	:NA

(71)**Name of Applicant :**
1)RELIANCE INDUSTRIES LIMITED
Address of Applicant :3RD FLOOR, MAKER CHAMBER-IV 222, NARIMAN POINT, MUMBAI-400021, MAHARASHTRA, INDIA
(72)**Name of Inventor :**
1)BAGUI MAHUYA
2)PATIL YOGESH POPATRAO
3)PATEL VIRALKUMAR
4)SARMA KRISHNA RENGANATH
5)JASRA RAKSH VIR
6)MATHUR AJIT BEHARI
7)VAKIL SUKETU

(57) Abstract :
The present disclosure relates to a transition metal based pro-catalyst represented by Formula I: Formula I wherein, the substituents have the meaning as defined in the specification. The present disclosure also relates to a process for preparing the transition metal based pro-catalyst represented by Formula I and the catalyst composition obtained therefrom. Further, the present disclosure relates to a process for polymerizing olefins by employing the catalyst composition comprising the transition metal based pro-catalyst represented by Formula I.

No. of Pages : 43 No. of Claims : 19

(12) PATENT APPLICATION PUBLICATION
(19) INDIA
(22) Date of filing of Application :18/07/2014
(21) Application No.1451/MUMNP/2014 A
(43) Publication Date : 17/04/2015

(54) Title of the invention : COVER ELEMENT

(51) International classification :E03F1/00
(31) Priority Document No :10 2012 100 555.9
(32) Priority Date :24/01/2012
(33) Name of priority country :Germany
(86) International Application No :PCT/EP2013/051202
Filing Date :23/01/2013
(87) International Publication No :WO 2013/110637
(61) Patent of Addition to Application Number :NA
Filing Date :NA
(62) Divisional to Application Number :NA
Filing Date :NA

(71)**Name of Applicant :**
1)ACO SEVERIN AHLMANN GMBH & CO. KG
Address of Applicant :Am Ahlmannkai 24782 B¼delsdorf Germany
(72)**Name of Inventor :**
1)WICHMANN Thorsten
2)MEINCKE Arne
3)MIEZE Jan

(57) Abstract :
The invention relates to a cover element for covering an opening in an in particular horizontal surface of a drain trench body with an edge region (21) which is designed for supporting the cover element (20) on the drain trench body and with a covering region (22) which comprises a lattice or perforated structure with supporting elements (23). It is characterized in that starting from the edge region (21) the supporting elements (23) have in the direction of regions remote from the edge a thickness which increases in the vertical direction in such a way that the cover element (20) has substantially a planoconvex outer contour.

No. of Pages : 15 No. of Claims : 12

(12) PATENT APPLICATION PUBLICATION
(19) INDIA
(22) Date of filing of Application :18/07/2014
(21) Application No.1452/MUMNP/2014 A
(43) Publication Date : 17/04/2015

(54) Title of the invention : DRAIN TRENCH BODY CONNECTING ELEMENT

(51) International classification :E03F1/00,E02B11/00
(31) Priority Document No :10 2012 100 560.5
(32) Priority Date :24/01/2012
(33) Name of priority country :Germany
(86) International Application No :PCT/EP2013/051183
Filing Date :23/01/2013
(87) International Publication No :WO 2013/110629
(61) Patent of Addition to Application Number :NA
Filing Date :NA
(62) Divisional to Application Number :NA
Filing Date :NA

(71)**Name of Applicant :**
1)ACO SEVERIN AHLMANN GMBH & CO. KG
Address of Applicant :Am Ahlmannkai 24782 B¼delsdorf Germany
(72)**Name of Inventor :**
1)WANDKOWSKI Marco
2)MIEZE Jan
3)WICHMANN Thorsten

(57) Abstract :
Drain trenches are hollow or lattice bodies which can be installed in the ground and which are intended for receiving surface water and for releasing it slowly into the ground or for storing the water. These hollow or lattice bodies are composed of individual drain trench bodies which have to be fixedly connected to one another. Drain trench body connecting elements (1 2) for connecting trench bodies are proposed which comprise two spigots (20 20) which are connected via a web (21) and which can in each case be inserted into a receiving opening of a drain trench body in such a way that two drain trench bodies are connected to one another via the web (21).

No. of Pages : 21 No. of Claims : 12

(12) PATENT APPLICATION PUBLICATION
(19) INDIA
(22) Date of filing of Application :18/04/2013
(21) Application No.1453/MUM/2013 A
(43) Publication Date : 17/04/2015

(54) Title of the invention : METHOD OF CONTROLLING SPEED OF A VARIABLE SPEED GENERATOR

(51) International classification	:H02P9/00, H02P9/04
(31) Priority Document No	:13/450,770
(32) Priority Date	:19/04/2012
(33) Name of priority country	:U.S.A.
(86) International Application No	:NA
Filing Date	:NA
(87) International Publication No	: NA
(61) Patent of Addition to Application Number	:NA
Filing Date	:NA
(62) Divisional to Application Number	:NA
Filing Date	:NA

(71)**Name of Applicant :**
1)KOHLER CO.
Address of Applicant :444 HIGHLAND DRIVE, KOHLER, WI 53044, U.S.A. U.S.A.
(72)**Name of Inventor :**
1)FRAMPTON, ISAAC S.
2)ALBSMEIER, ERIC D.

(57) Abstract :
Some embodiments relate to a method of controlling speed of a variable speed generator. The method includes detecting a load of the variable speed generator and determining a target speed for the variable speed generator based on the load supplied by the variable speed generator. The method further includes using a controller to adjust the speed of the variable speed generator based on the target speed. The method may further include correcting the target speed by calculating a correction factor that corrects the target speed based on a voltage produced by the variable speed generator.

No. of Pages : 12 No. of Claims : 16

(12) PATENT APPLICATION PUBLICATION
(19) INDIA
(22) Date of filing of Application :18/07/2014
(21) Application No.1453/MUMNP/2014 A
(43) Publication Date : 17/04/2015

(54) Title of the invention : DRAIN TRENCH BODY AREAL UNIT

(51) International classification :E03F1/00
(31) Priority Document No :10 2012 100 552.4
(32) Priority Date :24/01/2012
(33) Name of priority country :Germany
(86) International Application No :PCT/EP2013/051198
Filing Date :23/01/2013
(87) International Publication No :WO 2013/110635
(61) Patent of Addition to Application Number :NA
Filing Date :NA
(62) Divisional to Application Number :NA
Filing Date :NA

(71)**Name of Applicant :**
1)ACO SEVERIN AHLMANN GMBH & CO. KG
Address of Applicant :Am Ahlmannkai 24782 B¼delsdorf Germany
(72)**Name of Inventor :**
1)MEINCKE Arne

(57) Abstract :
Drain trench body areal units are known which have conical spacer elements (10 10) which are connected to one another via a base (1). The spacer elements (10 10) have lateral surfaces (11) which extend in a wavy shape in cross section and which comprise wave crests (12) and wave troughs (14) which follow one another. In order to ensure maximum strength with minimum material a construction is proposed in which the wave crests merge into the wave troughs (14) via transition regions (13) wherein the transition regions (13) have a smaller material thickness than the wave troughs (14).

No. of Pages : 11 No. of Claims : 8

(12) PATENT APPLICATION PUBLICATION
(19) INDIA
(22) Date of filing of Application :18/04/2013

(21) Application No.1454/MUM/2013 A
(43) Publication Date : 17/04/2015

(54) Title of the invention : SYSTEM AND METHOD OF MEASURING POWER PRODUCED BY A POWER SOURCE

(51) International classification	:G01R 21/133, G01R 1/28
(31) Priority Document No	:13/451,008
(32) Priority Date	:19/04/2012
(33) Name of priority country	:U.S.A.
(86) International Application No	:NA
Filing Date	:NA
(87) International Publication No	: NA
(61) Patent of Addition to Application Number	:NA
Filing Date	:NA
(62) Divisional to Application Number	:NA
Filing Date	:NA

(71)**Name of Applicant :**
1)KOHLER CO.
Address of Applicant :444 HIGHLAND DRIVE, KOHLER, WI 53044, U.S.A. U.S.A.
(72)**Name of Inventor :**
1)FRAMPTON, ISAAC S.

(57) Abstract :
Some embodiments relate to a system for measuring power produced by a power source. The system includes a first voltage sensor for sensing a first voltage difference between a first voltage and a second voltage and a second voltage sensor for sensing a second voltage difference between a third voltage and the second voltage. The system further includes a first current sensor for sensing a current difference between a first current and a second current, and a second current sensor for sensing a current difference between a third current and the second current. The system further includes a power measuring device that determines the power produced by the power source using the first and second voltage differences and the first and second current differences.

No. of Pages : 17 No. of Claims : 22

(12) PATENT APPLICATION PUBLICATION
(19) INDIA
(22) Date of filing of Application :05/04/2013

(21) Application No.1323/MUM/2013 A
(43) Publication Date : 17/04/2015

(54) Title of the invention : FAIL-SAFE INTERFACE

(51) International classification	:H03K19/00, G06F11/00
(31) Priority Document No	:GB 1206259.2
(32) Priority Date	:05/04/2012
(33) Name of priority country	:U.K.
(86) International Application No	:NA
Filing Date	:NA
(87) International Publication No	: NA
(61) Patent of Addition to Application Number	:NA
Filing Date	:NA
(62) Divisional to Application Number	:NA
Filing Date	:NA

(71)**Name of Applicant :**
1)CONTROL TECHNIQUES LIMITED
Address of Applicant :THE GRO, POOL ROAD, NEWTOWN POWYS SY 16 3BE UNITED KINGDOM
(72)**Name of Inventor :**
1)COLIN HARGIS
2)RICHARD MARK WAIN

(57) Abstract :
A fail-safe interface, to an inverter, the interface comprising a safe and reliable enable function is provided by way of discrete components with well-defined failure modes. The interface does not require complex circuits or architecture nor electro-mechanical devices that are inherently unreliable, have a short life expectancy, and are expensive. The safety-related components are contained in a single circuit comprising two independent channels. These channels are positioned either on a discrete circuit board together or for added resilience to failure, on one discrete circuit board per channel. Each channel comprises the safety-related parts for the fail-safe interface and is independently enabled and disabled. The reliable enable/disable function is provided by switch-mode converters.

No. of Pages : 32 No. of Claims : 31

(12) PATENT APPLICATION PUBLICATION
(19) INDIA
(22) Date of filing of Application :18/04/2013
(21) Application No.1449/MUM/2013 A
(43) Publication Date : 17/04/2015

(54) Title of the invention : EFFICIENT ENERGY ACCUMULATION ELEMENT FOR ACTUATORS AND OTHER DEVICES

(51) International classification	:F03B17/02, F03B13/18
(31) Priority Document No	:NA
(32) Priority Date	:NA
(33) Name of priority country	:NA
(86) International Application No	:NA
Filing Date	:NA
(87) International Publication No	: NA
(61) Patent of Addition to Application Number	:NA
Filing Date	:NA
(62) Divisional to Application Number	:NA
Filing Date	:NA

(71)**Name of Applicant :**
1)ROTEX MANUFACTURERS AND ENGINEERS PRIVATE LIMITED
Address of Applicant :MANPADA ROAD, DOMBIVALI (EAST) - 421 204, MAHARASHTRA, INDIA
(72)**Name of Inventor :**
1)MR. AMIT SHAH

(57) Abstract :
An efficient energy accumulation element comprising compression spring which uses end caps and flexible rope to pre-compress spring for using in actuators and other devices. The efficient energy accumulation element is independent of external surfaces or end construction of spring. The accumulation and release of energy happens noiselessly.

No. of Pages : 14 No. of Claims : 12

(12) PATENT APPLICATION PUBLICATION
(19) INDIA
(22) Date of filing of Application :18/04/2013
(21) Application No.1450/MUM/2013 A
(43) Publication Date : 17/04/2015

(54) Title of the invention : SEPARATION DEVICE OF DUST FROM PIECES OF YARN FOR THE COLLECTION AND RECOVERY OF WINDING WASTE AND WINDING MACHINE WITH SUCH DEVICE

(51) International classification :B65H67/08, B65H54/70
(31) Priority Document No :MI2012A000638
(32) Priority Date :18/04/2012
(33) Name of priority country :Italy
(86) International Application No :NA
Filing Date :NA
(87) International Publication No : NA
(61) Patent of Addition to Application Number :NA
Filing Date :NA
(62) Divisional to Application Number :NA
Filing Date :NA

(71)**Name of Applicant :**
1)SAVIO MACCHINE TESSILI S.P.A.
Address of Applicant :VIA UDINE, 105 I-33170 PORDENONE, ITALY
(72)**Name of Inventor :**
1)BADIALI ROBERTO
2)CEOLIN MAURO
3)QUERENGHI MAURO
4)SACILOTTO SIMONE

(57) Abstract :
A winding machine comprising a plurality of winding units and at least one aspirator is disclosed. The machine is able to suck impurities and hair of the yarn, that is the dusts, or pieces of yarn deriving from the restoration and junction interventions of the yarn. The aspirator is connected to a common multi-cyclone type general filter for collecting the winding waste. The aspirator comprises in series a double cyclone device for separating pieces of yarn from the dusts and a filter device of said dusts exiting from said double cyclone device. The double cyclone device of an annular centra] portion and two frustum-conical portions respectively lower and upper arranged at the opposite sides of the annular portion for generating two cyclones respectively of the pieces of yarn and of the dusts and for conveying the same from the central portion to the reduced-diameter mouths of said two frustum-conical portions. The double cyclone device comprises primary nozzles for injecting tangential flows of compressed air into the double cyclone device.

No. of Pages : 22 No. of Claims : 11

(12) PATENT APPLICATION PUBLICATION
(19) INDIA
(22) Date of filing of Application :18/07/2014
(21) Application No.1450/MUMNP/2014 A
(43) Publication Date : 17/04/2015

(54) Title of the invention : EXHAUST GAS HEAT RECOVERY DEVICE

(51) International classification :F01N5/02
(31) Priority Document No :2011-281468
(32) Priority Date :22/12/2011
(33) Name of priority country :Japan
(86) International Application No :PCT/JP2012/082534
Filing Date :14/12/2012
(87) International Publication No :WO 2013/094539
(61) Patent of Addition to Application Number :NA
Filing Date :NA
(62) Divisional to Application Number :NA
Filing Date :NA

(71)**Name of Applicant :**
1)FUTABA INDUSTRIAL CO. LTD.
Address of Applicant :1 Aza ochaya Hashime cho Okazaki shi Aichi 4448558 Japan
(72)**Name of Inventor :**
1)KATO Hisayuki
2)OKAMI Hirohisa

(57) Abstract :
This exhaust gas heat recovery device is a device for recovering heat from exhaust gas discharged from an internal combustion engine. The exhaust gas heat recovery device is provided with: an exhaust pipe (1) for conducting exhaust gas which flows from the upstream side to the downstream side; a cylindrical shell (2) for covering the outer side of the exhaust pipe; and an exhaust gas heat recovery section (4) provided between the exhaust pipe and the cylindrical shell and allowing the heat exchange between the exhaust gas and a heat exchange medium. A stacked body (10) formed by stacking jacket parts (6 8) in which heat exchange medium conduits are formed is provided within the exhaust gas heat recovery section. The heat exchange medium conduits (20) of the jacket parts are connected to each other in series in the stacked body.

No. of Pages : 26 No. of Claims : 5

(12) PATENT APPLICATION PUBLICATION
(19) INDIA
(22) Date of filing of Application :18/07/2014
(21) Application No.1455/MUMNP/2014 A
(43) Publication Date : 17/04/2015

(54) Title of the invention : METHOD FOR MANAGING THE CHARGE IN A MELTING FURNACE AND CORRESPONDING LOADING APPARATUS

(51) International classification :C21C5/52,F27B3/18,F27D13/00
(31) Priority Document No :UD2012A000009
(32) Priority Date :23/01/2012
(33) Name of priority country :Italy
(86) International Application No :PCT/IB2013/000070
Filing Date :23/01/2013
(87) International Publication No:WO 2013/110993
(61) Patent of Addition to Application Number :NA
Filing Date :NA
(62) Divisional to Application Number :NA
Filing Date :NA

(71)**Name of Applicant :**
1)DANIELI AUTOMATION SPA
Address of Applicant :Via Bonaldo Stringher 4 I 33042 Buttrio Italy
(72)**Name of Inventor :**
1)DELLA VEDOVA Ferruccio
2)CIANI Lorenzo

(57) Abstract :
Method for managing the metal charge (1 1) in a melting furnace (14) comprising at least a step of depositing metal materials to be melted in a storage zone (13) a step of picking up and loading the metal materials from the storage zone (13) onto feed means (12) by means of loading means (19 22) and a feed step in which the feed means (12) feed the materials toward the melting furnace (14). The deposit step provides to divide the storage zone (13) into a plurality of specialized areas (33 40) in each of which a differentiated type of the metal materials (23 30) is deposited and during the pick up and loading step a processing device (50) controls and commands the actuation of the loading means (19 22) which pick up the types of materials (23 30) from the specialized areas (33 40) and load them onto the feed means (12) according to a desired modality and quantity.

No. of Pages : 17 No. of Claims : 13

(12) PATENT APPLICATION PUBLICATION
(19) INDIA
(22) Date of filing of Application :19/04/2013

(21) Application No.1456/MUM/2013 A
(43) Publication Date : 17/04/2015

(54) Title of the invention : IONIC LIQUID COMPOUND

(51) International classification	:B01J 31/00, B01J 13/14
(31) Priority Document No	:NA
(32) Priority Date	:NA
(33) Name of priority country	:NA
(86) International Application No	:NA
Filing Date	:NA
(87) International Publication No	: NA
(61) Patent of Addition to Application Number	:NA
Filing Date	:NA
(62) Divisional to Application Number	:NA
Filing Date	:NA

(71)**Name of Applicant :**
1)RELIANCE INDUSTRIES LIMITED
Address of Applicant :3RD FLOOR, MAKER CHAMBER-IV 222, NARIMAN POINT, MUMBAI-400021, MAHARASHTRA, INDIA
(72)**Name of Inventor :**
1)ADURI PAVANKUMAR
2)UPPARA PARASU VEERA
3)KOTRA VISWANATH
4)SAKHALKAR MANGESH
5)DUKHANDE VIBHUTI

(57) Abstract :
The present disclosure provides an ionic liquid compound of Formula (I) and its application in reactions such as alkylation, arylation, acylation, diels alder and oligomerization. [(NR1R2R3)iM1]n+[(M2Yk)L Xj]n- Formula I The present disclosure also provides a process for preparing the ionic liquid compound of Formula (I) which involves preparing an ionic salt complex represented by Formula [(NR1R2R3)iM1]n+[Xj]n- by mixing an amine represented by Formula NR1R2R3 and a metal salt represented by formula M1Xj; and mixing the ionic salt complex and a metal salt represented by formula M2¬Yk to obtain the ionic liquid compound.

No. of Pages : 37 No. of Claims : 25

(12) PATENT APPLICATION PUBLICATION
(19) INDIA
(22) Date of filing of Application :18/07/2014
(21) Application No.1456/MUMNP/2014 A
(43) Publication Date : 17/04/2015

(54) Title of the invention : METHOD FOR PRODUCING MASTERBATCHES

(51) International classification :C08J3/22,C08K5/098,C08K5/43
(31) Priority Document No :2011-278864
(32) Priority Date :20/12/2011
(33) Name of priority country :Japan
(86) International Application No :PCT/JP2012/081841
Filing Date :07/12/2012
(87) International Publication No:WO 2013/094436
(61) Patent of Addition to Application Number :NA
Filing Date :NA
(62) Divisional to Application Number :NA
Filing Date :NA

(71)**Name of Applicant :**
1)ADEKA CORPORATION
Address of Applicant :2 35 Higashiogu 7 chome Arakawa ku Tokyo 1160012 Japan
(72)**Name of Inventor :**
1)URUSHIHARA Tsuyoshi
2)TSUNEIZUMI Yota

(57) Abstract :
Provided is a method for producing masterbatches that enables masterbatches with improved formability and containing a metal salt compound while having little coloring to be provided. The method for producing masterbatches whereby a metal salt compound is blended with a polyester resin is characterized by comprising: a first step in which a kneaded product is obtained by supplying the polyester resin and the metal salt compound to an extruder and then melt kneading said polyester resin and metal salt compound; and a second step in which while continuing kneading after the first step the polyester resin is further supplied to the extruder and kneaded. The method for producing masterbatches is further characterized in that: the mass ratio of the polyester resin and metal salt compound supplied in the first step is less than or equal to two times in terms of the metal salt compound with respect to the polyester resin; and the total amount of polyester resin supplied in the first step and second step and the metal salt compound supplied in the first step with respect to the total amount of polyester resin and metal salt compound supplied in the first step lies within a range of two to twenty times in terms of mass ratio.

No. of Pages : 30 No. of Claims : 7

(12) PATENT APPLICATION PUBLICATION
(19) INDIA
(22) Date of filing of Application :19/04/2013
(21) Application No.1457/MUM/2013 A
(43) Publication Date : 17/04/2015

(54) Title of the invention : A PROCESS FOR REGENERATING IONIC COMPOUND

(51) International classification	:B01J 21/20, B01J 38/00
(31) Priority Document No	:NA
(32) Priority Date	:NA
(33) Name of priority country	:NA
(86) International Application No	:NA
Filing Date	:NA
(87) International Publication No	: NA
(61) Patent of Addition to Application Number	:NA
Filing Date	:NA
(62) Divisional to Application Number	:NA
Filing Date	:NA

(71)**Name of Applicant :**
1)RELIANCE INDUSTRIES LIMITED
Address of Applicant :3RD FLOOR, MAKER CHAMBER-IV 222, NARIMAN POINT, MUMBAI-400021, MAHARASHTRA, INDIA
(72)**Name of Inventor :**
1)ADURI PAVANKUMAR
2)UPPARA PARASU VEERA
3)KOTRA VISWANATH
4)DUKHANDE VIBHUTI
5)RAJE VIVEK PRABHAKAR
6)SAKHALKAR MANGESH

(57) Abstract :
The present disclosure provides a process for regenerating the deactivated ionic compound. The process involves mixing a deactivated ionic compound with at least one solvent such as ethyl acetate and neutralizing with at least one base such as triethylamine and tert-butyl amine to obtain a precipitate. The obtained precipitate is filtered to obtain a residue which is then washed with a solvent such as dichloromethane to obtain the ionic compound.

No. of Pages : 29 No. of Claims : 9

(12) PATENT APPLICATION PUBLICATION
(19) INDIA
(22) Date of filing of Application :28/03/2013
(21) Application No.1180/MUM/2013 A
(43) Publication Date : 17/04/2015

(54) Title of the invention : AN IMPROVED PROCESS FOR PRODUCING A SOLID FORM OF DIBENZYL FOSAPREPITANT

(51) International classification :C07F9/6558,C07F9/40
(31) Priority Document No :NA
(32) Priority Date :NA
(33) Name of priority country :NA
(86) International Application No :NA
Filing Date :NA
(87) International Publication No : NA
(61) Patent of Addition to Application Number :NA
Filing Date :NA
(62) Divisional to Application Number :NA
Filing Date :NA

(71)**Name of Applicant :**
1)PIRAMAL ENTERPRISES LIMITED
Address of Applicant :PIRAMAL TOWER, GANPATRAO KADAM MARG, LOWER PAREL, MUMBAI-400 013, STATE OF MAHARASHTRA, INDIA
(72)**Name of Inventor :**
1)LADKAT, PRASHANT
2)JAGTAP, ASHUTOSH
3)ROY, MITA
4)HARIHARAN, SIVARAMAKRISHNAN

(57) Abstract :
The present invention relates to an improved process for producing dibenzyl{3-[2(R)-[(lR)-l-[3,5-bis(trifluoromethyl)phenyl]ethoxy]-3(S)-(4-fluorophenyl)morphoIin-4-yl]-5-oxo-4,5-dihydro-[l,2,4]-triazol-l-yl]phosphonic acid (the compound of formula I) in a solid form, comprising dissolving the compound of formula I in an oily form in an organic solvent or a mixture thereof at a temperature of 35-50°C to obtain a solution and crystallising out the compound of formula I in solid form by cooling the obtained solution at 0-10°C.

No. of Pages : 17 No. of Claims : 7

(12) PATENT APPLICATION PUBLICATION
(19) INDIA
(22) Date of filing of Application :19/04/2013
(21) Application No.1460/MUM/2013 A
(43) Publication Date : 17/04/2015

(54) Title of the invention : CLAMPING ASSEMBLY FOR STERNAL CLOSURE AND RIBS APPROXIMATOR DEVICES AND METHODS THEREOF

(51) International classification	:A61B17/80, A61B17/84
(31) Priority Document No	:NA
(32) Priority Date	:NA
(33) Name of priority country	:NA
(86) International Application No	:NA
Filing Date	:NA
(87) International Publication No	: NA
(61) Patent of Addition to Application Number	:NA
Filing Date	:NA
(62) Divisional to Application Number	:NA
Filing Date	:NA

(71)**Name of Applicant :**
1)PATIL, Ajay K.
Address of Applicant :62-B, SANJAY APPTS, NEAR SARDAR BAUG CIRCUIT HOUSE, RAJKOT. 360001, INDIA. Gujarat India
(72)**Name of Inventor :**
1)PATIL, Ajay K.

(57) Abstract :
A clamping assembly for sternal closure and ribs approximator device, the clamping assembly comprising: a) a first coupling element joined to a first end region of a shaft, said first coupling element capable of being stationary or movable relative to said first end region; b) a second coupling element engaged with the first coupling element via a joint; c) a first clamping element engaged with the second coupling element via a joint; and d) a relative motion enabling component; wherein a joint used in the clamping assembly is a joint other than a pivot joint; and wherein the said shaft comprises a second end region.

No. of Pages : 22 No. of Claims : 10

(12) PATENT APPLICATION PUBLICATION
(19) INDIA
(22) Date of filing of Application :21/07/2014

(21) Application No.1460/MUMNP/2014 A
(43) Publication Date : 17/04/2015

(54) Title of the invention : A COMPOSITION AND METHOD FOR TREATING SUBSTRATES

(51) International classification :C11D1/00,C11D1/722,C11D3/00
(31) Priority Document No :0295/MUM/2012
(32) Priority Date :31/01/2012
(33) Name of priority country :India
(86) International Application No :PCT/EP2013/050546
Filing Date :14/01/2013
(87) International Publication No :WO 2013/113541
(61) Patent of Addition to Application Number :NA
Filing Date :NA
(62) Divisional to Application Number :NA
Filing Date :NA

(71)**Name of Applicant :**
1)UNILEVER PLC
Address of Applicant :Unilever House 100 Victoria Embankment London Greater London EC4Y 0DY U.K.
(72)**Name of Inventor :**
1)GHOSH AmitKumar
2)PERINCHEERY Aravindakshan
3)RASTOGI Abhishek
4)SARKAR Arpita
5)DUTTA Kingshuk

(57) Abstract :
The present invention relates to a composition and a method for treating substrates such as fabrics; particularly to make the substrate stain repellent and easier to clean upon the subsequent wash. The invention has been developed primarily for use on fabrics and will be described hereinafter with reference to these applications. It is an object of the present invention to provide stain repellence to a fabric. It is still another object of the invention to provide a composition that provides improved perfume delivery to the fabric. It has been found that improved perfume delivery is obtained in compositions comprising a fatty acid a water soluble salt of Aluminium and a non ionic polymer. Improved stain repellence is obtained when the HLB of the polymer is between 12 and 18.

No. of Pages : 39 No. of Claims : 12

(12) PATENT APPLICATION PUBLICATION
(19) INDIA
(22) Date of filing of Application :21/07/2014
(21) Application No.1461/MUMNP/2014 A
(43) Publication Date : 17/04/2015

(54) Title of the invention : HAIR COMPOSITION WITH IMPROVED RHEOLOGY

(51) International classification :A61K8/81,A61Q5/00
(31) Priority Document No :12305117.9
(32) Priority Date :31/01/2012
(33) Name of priority country :EPO
(86) International Application No :PCT/EP2013/051700
Filing Date :29/01/2013
(87) International Publication No :WO 2013/113705
(61) Patent of Addition to Application Number :NA
Filing Date :NA
(62) Divisional to Application Number :NA
Filing Date :NA

(71)**Name of Applicant :**
1)UNILEVER PLC
Address of Applicant :Unilever House 100 Victoria Embankment London Greater London EC4Y 0DY U.K.
(72)**Name of Inventor :**
1)BLONDEL Frdric Jean Michel
2)ROBERTS Christopher John

(57) Abstract :
A hair treatment composition comprising a thickener which comprises a copolymer derived from the polymerization of at least a non ionic monomer (a) and at least a cationic monomer (b).

No. of Pages : 41 No. of Claims : 13

(12) PATENT APPLICATION PUBLICATION
(19) INDIA
(22) Date of filing of Application :21/07/2014
(21) Application No.1462/MUMNP/2014 A
(43) Publication Date : 17/04/2015

(54) Title of the invention : PROCESS FOR MANUFACTURING TEA PRODUCTS

(51) International classification :A23F3/00,A23F3/14,A23F3/16
(31) Priority Document No :12152822.8
(32) Priority Date :27/01/2012
(33) Name of priority country :EPO
(86) International Application No :PCT/EP2013/051215
Filing Date :23/01/2013
(87) International Publication No :WO 2013/110642
(61) Patent of Addition to Application Number :NA
Filing Date :NA
(62) Divisional to Application Number :NA
Filing Date :NA

(71)**Name of Applicant :**
1)UNILEVER PLC
Address of Applicant :Unilever House 100 Victoria Embankment London Greater London EC4Y 0DY U.K.
(72)**Name of Inventor :**
1)PATEL Parul Rameshchandra
2)WOOLLEY Helen Jane

(57) Abstract :
A process for producing tea products is provided the process comprising: expressing juice from a first supply of unfermented fresh tea leaves thereby to produce a first tea juice and a first leaf residue; subjecting the first supply of fresh tea leaves and/or the first tea juice to an enzyme deactivation treatment thereby to prevent fermentation of the tea leaves and/or juice; expressing juice from a second supply of unfermented fresh tea leaves thereby to produce a second tea juice and a second leaf residue; and combining the first tea juice in which the enzymes have been deactivated with the second tea juice.

No. of Pages : 15 No. of Claims : 15

(12) PATENT APPLICATION PUBLICATION
(19) INDIA
(22) Date of filing of Application :18/06/2013
(21) Application No.1164/MUMNP/2013 A
(43) Publication Date : 17/04/2015

(54) Title of the invention : ANALGESIC COMPOUNDS METHODS AND FORMULATIONS

(51) International classification	:A61K31/135, C07C217/54, C07C219/26
(31) Priority Document No	:PCT/CN2011/070706
(32) Priority Date	:27/01/2011
(33) Name of priority country	:China
(86) International Application No	:PCT/US2012/021181
Filing Date	:13/01/2012
(87) International Publication No	:WO 2012/102875
(61) Patent of Addition to Application Number	:NA
Filing Date	:NA
(62) Divisional to Application Number	:NA
Filing Date	:NA

(71)**Name of Applicant :**
1)ELI LILLY AND COMPANY
Address of Applicant :Lilly Corporate Center Indianapolis Indiana 46285 U.S.A. U.S.A.
(72)**Name of Inventor :**
1)DEFAUW Jean Marie
2)HOLMSTROM Scott Dale
3)CHEN Shuhui
4)ZHANG Yang
5)WU Wentao
6)PENG Xian
7)MA Yujuan
8)LU Lun

(57) Abstract :
Provided are analgesic compounds and salts thereof of formula: (I) wherein A is: (A) Additionally pharmaceutical formulations and methods of use employing the above compounds are provided.

No. of Pages : 105 No. of Claims : 28

(12) PATENT APPLICATION PUBLICATION
(19) INDIA
(22) Date of filing of Application :08/04/2013
(21) Application No.1337/MUM/2013 A
(43) Publication Date : 17/04/2015

(54) Title of the invention : DNA DIGITAL PATTERN MAKING MACHINE.

(51) International classification	:G06F21/36, G06F 3/041
(31) Priority Document No	:NA
(32) Priority Date	:NA
(33) Name of priority country	:NA
(86) International Application No	:NA
Filing Date	:NA
(87) International Publication No	: NA
(61) Patent of Addition to Application Number	:NA
Filing Date	:NA
(62) Divisional to Application Number	:NA
Filing Date	:NA

(71)**Name of Applicant :**
1)YASHODHAN AVINASH MOGHE
Address of Applicant :A2/1, DHANLAXMI PARK, PAUD ROAD, KOTHRUD, PUNE - 411038. Maharashtra India
(72)**Name of Inventor :**
1)YASHODHAN AVINASH MOGHE

(57) Abstract :
DNA Digital Pattern Making Machine is for graphically enhanced DNA fingerprints to create super-customized merchandise like Jewelry, Denims, Bed Linen. Carpets. Wallpapers, Sarees. skins for tablets, phones and laptops etc. . DNA pattern design, for respective customers offers the chance to express themselves in the most unique and creative way possible. It is an undeniable fact that a persons DNA is the most unique and important factor in their lives. Their DNA represents everything they are.DNA Digital Pattern Making Machine is a completely new system for Imaging and Digitisation of DNA fingerprinting from scratch.

No. of Pages : 7 No. of Claims : 7

(12) PATENT APPLICATION PUBLICATION
(19) INDIA
(22) Date of filing of Application :08/04/2013
(21) Application No.1338/MUM/2013 A
(43) Publication Date : 17/04/2015

(54) Title of the invention : A CHILLER SYSTEM AND A METHOD FOR CONTROLLING OPERATION OF A CHILLER SYSTEM

(51) International classification	:F25B 1/00, F25B7/00
(31) Priority Document No	:NA
(32) Priority Date	:NA
(33) Name of priority country	:NA
(86) International Application No	:NA
Filing Date	:NA
(87) International Publication No	: NA
(61) Patent of Addition to Application Number	:NA
Filing Date	:NA
(62) Divisional to Application Number	:NA
Filing Date	:NA

(71)**Name of Applicant :**
1)BLUE STAR LIMITED
Address of Applicant :KASTURI BUILDINGS, MOHAN T. ADVANI CHOWK, JAMSHETJI TATA ROAD, MUMBAI-400 020, MAHARASHTRA, INDIA.
(72)**Name of Inventor :**
1)S.M.KULKARNI
2)S. D. PASARKAR

(57) Abstract :
This invention relates to a chiller system comprising an evaporator, a compressor, a condenser, an expansion device arranged in series, wherein said expansion device comprises an electronic expansion valve and an orifice adapted parallelly between the condenser and the evaporator of the refrigeration system. The present invention also provides a method comprising of steps of monitoring discharge superheat of compressed refrigerant, adjusting both the expansion valve and the orifice to maintain predetermined level of refrigerant in evaporator, closing the orifice first when the discharge superheat of refrigerant falls below a predetermined set point to raise the superheat above the said set point. The present invention helps to reduce the liquid refrigerant level fast by cycling of orifice as compared to modulation of expansion valve.

No. of Pages : 18 No. of Claims : 11

(12) PATENT APPLICATION PUBLICATION
(19) INDIA
(22) Date of filing of Application :21/07/2014
(21) Application No.1463/MUMNP/2014 A
(43) Publication Date : 17/04/2015

(54) Title of the invention : HYBRID POWERTRAIN AND METHOD FOR CONTROLLING A HYBRID POWERTRAIN

(51) International classification :B60K 6/02
(31) Priority Document No :PCT/SE06/000315
(32) Priority Date :09/03/2006
(33) Name of priority country :Sweden
(86) International Application No :PCT/SE2007/000227
Filing Date :09/03/2007
(87) International Publication No :WO/2007/102775
(61) Patent of Addition to Application Number :NA
Filing Date :NA
(62) Divisional to Application Number :1661/MUMNP/2008
Filed on :01/08/2008

(71)**Name of Applicant :**
1)VOLVO TECHNOLOGY CORP.
Address of Applicant :S-405 08 GOETEBORG, SWEDEN
(72)**Name of Inventor :**
1)CARLHAMMAR, Lars
2)CARLSSON, Benny

(57) Abstract :
There is provided a hybrid powertrain (10) including (i) a combustion engine (20) operable to output rotational power thereat, (ii) an electric machine arrangement (60) being operable to output rotational power thereat, (iii) a gearbox arrangement (200) for receiving rotational power from at least one of the combustion engine (20) and the electric machine arrangement (60), and being operable to couple motive power to a load (230) coupled to the gearbox arrangement (200). The gearbox arrangement (200) is operable to provide a plurality of gearing ratios. The electric machine arrangement (60) is employable to extend a rotation rate range provided in a given gearing ratio: (a) at higher rotation rates prior to a gear change from said given gearing ratio to a gearing ratio subsequent thereto; or (b) at both lower rotation rates when accelerating from a standstill or from a preceding gear, and at higher rotation rates prior to a gear change from said given gearing ratio to a gearing ratio subsequent thereto

No. of Pages : 28 No. of Claims : 2

(12) PATENT APPLICATION PUBLICATION
(19) INDIA
(22) Date of filing of Application :28/06/2013
(21) Application No.1282/MUMNP/2013 A
(43) Publication Date : 17/04/2015

(54) Title of the invention : AN IMPROVED PROCESS FOR RECOVERY OF MALEIC ANHYDRIDE BY USING ORGANIC SOLVENT

(51) International classification :C07D307/60
(31) Priority Document No :NA
(32) Priority Date :NA
(33) Name of priority country :NA
(86) International Application No :PCT/IT2010/000500
Filing Date :13/12/2010
(87) International Publication No :WO 2012/081043
(61) Patent of Addition to Application Number :NA
Filing Date :NA
(62) Divisional to Application Number :NA
Filing Date :NA

(71)**Name of Applicant :**
1)CONSER SPA
Address of Applicant :Piazzale Ezio Tarantelli 100 I 00144 Roma Italy
(72)**Name of Inventor :**
1)SIMOLA Flavio
2)CASSARINO Salvatore
3)IOSCO Antonio

(57) Abstract :
The present invention relates to a process for the recovery of maleic anhydride from the gas produced by the catalytic oxidation of hydrocarbon n butane or benzene characterized by: d) High efficiency in maleic anhydride recovery e) Reduced formation of maleic acid and fumaric acid f) Reduced maintenance thanks to the prevented formation of solid deposits in the absorber and in other related equipment

No. of Pages : 37 No. of Claims : 15

(12) PATENT APPLICATION PUBLICATION
(19) INDIA
(22) Date of filing of Application :22/04/2013
(21) Application No.1466/MUM/2013 A
(43) Publication Date : 17/04/2015

(54) Title of the invention : PROCESS FOR PREPARING CLOMIPRAMINE SALTS

(51) International classification	:A61K31/55, A61K31/135
(31) Priority Document No	:NA
(32) Priority Date	:NA
(33) Name of priority country	:NA
(86) International Application No	:NA
Filing Date	:NA
(87) International Publication No	: NA
(61) Patent of Addition to Application Number	:NA
Filing Date	:NA
(62) Divisional to Application Number	:NA
Filing Date	:NA

(71)**Name of Applicant :**
1)HERBERT BROWN PHARMACEUTICAL & RESEARCH LABORATORIES
Address of Applicant :W-256/257/258A, M.I.D.C. PHASE II, SHIVAJI UDYOG NAGAR, DOMBIVALI (E)-421203, DISTRICT- THANE, MAHARASHTRA, INDIA.
(72)**Name of Inventor :**
1)GUND, VITTHAL GENBHAU
2)SHINGOTE, SANTOSH SHIVAJI
3)SHINDE, RAHUL BABANRAO
4)KULKARNI, PRASAD RAMAKANT

(57) Abstract :
The present invention relates to an improved process for the preparation of Clomipramine salts, particularly Clomipramine hydrochloride of Formula I and Clomipramine sulfate of Formula II. The process for the preparation of Clomipramine hydrochloride of Formula I comprises of reacting 3-chloroiminodibenzyl with N,N-dimethylaminopropyl chloride in an aromatic hydrocarbon in presence of an alkali metal hydroxide; filtering the reaction mixture, cooling, diluting with water and adding aqueous sulfuric acid to obtain crude Clomipramine sulfate; recrystallizing the crude Clomipramine sulfate using acetone-water mixture to obtain Clomipramine sulfate of Formula II having HPLC purity of more than 99.5%; suspending Clomipramine sulfate of Formula II in water, adding an aqueous alkali metal hydroxide solution and an aliphatic hydrocarbon, stirring and separating an aqueous layer and an organic layer; charcoalizing the organic layer, cooling and adjusting pH by addition of alcoholic hydrochloride to yield Clomipramine hydrochloride of Formula I having HPLC purity of more than 99.7%.

No. of Pages : 22 No. of Claims : 10

(12) PATENT APPLICATION PUBLICATION
(19) INDIA
(22) Date of filing of Application :21/07/2014
(21) Application No.1466/MUMNP/2014 A
(43) Publication Date : 17/04/2015

(54) Title of the invention : HYBRID POWERTRAIN AND METHOD FOR CONTROLLING A HYBRID POWERTRAIN

(51) International classification :B60K 6/02
(31) Priority Document No :PCT/SE06/000315
(32) Priority Date :09/03/2006
(33) Name of priority country :Sweden
(86) International Application No :PCT/SE2007/000227
Filing Date :09/03/2007
(87) International Publication No :WO/2007/102775
(61) Patent of Addition to Application Number :NA
Filing Date :NA
(62) Divisional to Application Number :1661/MUMNP/2008
Filed on :01/08/2008

(71)**Name of Applicant :**
1)VOLVO TECHNOLOGY CORP.
Address of Applicant :S-405 08 GOETEBORG, SWEDEN
(72)**Name of Inventor :**
1)CARLHAMMAR, Lars
2)CARLSSON, Benny

(57) Abstract :
There is provided a hybrid powertrain (10) including (i) a combustion engine (20) operable to output rotational power thereat, (ii) an electric machine arrangement (60) being operable to output rotational power thereat, (iii) a gearbox arrangement (200) for receiving rotational power from at least one of the combustion engine (20) and the electric machine arrangement (60), and being operable to couple motive power to a load (230) coupled to the gearbox arrangement (200). The gearbox arrangement (200) is operable to provide a plurality of gearing ratios. The electric machine arrangement (60) is employable to extend a rotation rate range provided in a given gearing ratio: (a) at higher rotation rates prior to a gear change from said given gearing ratio to a gearing ratio subsequent thereto; or (b) at both lower rotation rates when accelerating from a standstill or from a preceding gear, and at higher rotation rates prior to a gear change from said given gearing ratio to a gearing ratio subsequent thereto

No. of Pages : 27 No. of Claims : 22

(12) PATENT APPLICATION PUBLICATION
(19) INDIA
(22) Date of filing of Application :22/04/2013
(21) Application No.1467/MUM/2013 A
(43) Publication Date : 17/04/2015

(54) Title of the invention : AN IMPROVED PROCESS FOR TRIMETHOBENZAMIDE

(51) International classification :C07C233/16
(31) Priority Document No :NA
(32) Priority Date :NA
(33) Name of priority country :NA
(86) International Application No :NA
Filing Date :NA
(87) International Publication No : NA
(61) Patent of Addition to Application Number :NA
Filing Date :NA
(62) Divisional to Application Number :NA
Filing Date :NA

(71)**Name of Applicant :**
1)EMCURE PHARMACEUTICALS LIMITED
Address of Applicant :EMCURE HOUSE, T-184, M.I.D.C., BHOSARI, PUNE-411026, INDIA. Maharashtra India
(72)**Name of Inventor :**
1)GURJAR MUKUND KESHAV
2)NEELAKANDAN KALIAPERUMAL
3)PANCHABHAI PRASAD PANDURANG
4)SRINIVAS NANDALA
5)BALASUBRAMANIAN PRABHAKARAN
6)AHIRRAO PRAVIN PRABHAKAR
7)MEHTA SAMIT SATISH

(57) Abstract :
A process for preparation of trimethobenzamide hydrochloride comprising, coupling of 3,4,5-timethoxy benzoic acid with N,N-carbonyldiimidazole (CDI) in presence of inorganic base in an organic solvent and treatment of N-(3,4,5-trimethoxybenzoyl)imidazole with 4-(dimethylamino ethoxy)-benzylamine in a base and treatment of reaction mixture with paraformaldehyde and formic acid resulting in a pure trimethobenzamide hydrochloride free from associated impurities below the regulatory limits.

No. of Pages : 20 No. of Claims : 8

(12) PATENT APPLICATION PUBLICATION
(19) INDIA
(22) Date of filing of Application :27/03/2013

(21) Application No.1170/MUM/2013 A
(43) Publication Date : 17/04/2015

(54) Title of the invention : PROPELLER SHAFT CENTER BEARING MOUNTING BRACKET

(51) International classification	:B60K17/24, F16C27/00, F16C35/02, F16C35	(71)**Name of Applicant :** **1)TATA MOTORS LIMITED** Address of Applicant :Bombay House, 24 Homi Mody Street, Hutatma Chowk, Mumbai 400 001, Maharashtra, India
(31) Priority Document No	:NA	(72)**Name of Inventor :**
(32) Priority Date	:NA	**1)RAJANIKANT RATNAKAR PATHAK**
(33) Name of priority country	:NA	**2)NIKETAN BALKRISHNA KULKARNI**
(86) International Application No	:NA	
Filing Date	:NA	
(87) International Publication No	: NA	
(61) Patent of Addition to Application Number	:NA	
Filing Date	:NA	
(62) Divisional to Application Number	:NA	
Filing Date	:NA	

(57) Abstract :
The disclosure relates to an arrangement (100) for mounting a center bearing on a chassis (102) of a vehicle. The arrangement (100) includes a first arm (1) capable of carrying a center bearing; a second arm (2) opposite to the first arm (1), the second arm (2) also capable of carrying a center bearing; and an intermediate portion (3) connecting the first arm (1) and the second arm (2), the intermediate portion (4) is capable of being connected to a cross member (104) of the chassis of the vehicle whereby both the first arm (1) and the second arm (2) are in a predetermined position with respect to the cross member (104) of the chassis (102).

No. of Pages : 14 No. of Claims : 8

(12) PATENT APPLICATION PUBLICATION
(19) INDIA
(22) Date of filing of Application :10/04/2013

(21) Application No.1349/MUM/2013 A
(43) Publication Date : 17/04/2015

(54) Title of the invention : HEAT AND MASS EXCHANGER.

(51) International classification	:F24F3/14, F28F1/32
(31) Priority Document No	:NA
(32) Priority Date	:NA
(33) Name of priority country	:NA
(86) International Application No	:NA
Filing Date	:NA
(87) International Publication No	: NA
(61) Patent of Addition to Application Number	:NA
Filing Date	:NA
(62) Divisional to Application Number	:NA
Filing Date	:NA

(71)**Name of Applicant :**
1)INDIAN INSTITUTE OF TECHNOLOGY, BOMBAY
Address of Applicant :INDIAN INSTITUTE OF TECHNOLOGY BOMBAY, POWAI, MUMBAI-400076. Maharashtra India
(72)**Name of Inventor :**
1)DR. MILIND VISHWANATH RANE
2)SHREYAS ATMARAM CHAVAN

(57) Abstract :
A system for heat and/or mass transfer between two or more fluid streams with baffle flow, parallel flow, cross flow or counter flow heat exchanger where the heat and/or mass exchanger is provided with multi-wall sections/elements with primary and/or secondary crests and troughs on the surface to enhance Heat and/or Mass Transfer area, stacked in multilayer arrangement.

No. of Pages : 52 No. of Claims : 25

(12) PATENT APPLICATION PUBLICATION
(19) INDIA
(22) Date of filing of Application :10/04/2013

(21) Application No.1350/MUM/2013 A
(43) Publication Date : 17/04/2015

(54) Title of the invention : TOP LOADING FULLY AUTOMATIC/SEMI-AUTOMATIC WASHING MACHINE WITH MECHANISED ROTATARY BRUSH

(51) International classification	:D06F 35/00, D06F 39/00	(71)**Name of Applicant :** **1)MIRC ELECTRONICS LIMITED** Address of Applicant :G-1, ONIDA HOUSE, MIDC, MAHAKALI CAVES ROAD, ANDHERI (EAST), MUMBAI - 400093, MAHARASHTRA, INDIA.
(31) Priority Document No	:NA	(72)**Name of Inventor :**
(32) Priority Date	:NA	**1)MIRCHANDANI, GULU LALCHAND**
(33) Name of priority country	:NA	
(86) International Application No	:NA	
Filing Date	:NA	
(87) International Publication No	: NA	
(61) Patent of Addition to Application Number	:NA	
Filing Date	:NA	
(62) Divisional to Application Number	:NA	
Filing Date	:NA	

(57) Abstract :
A household washing machine having a cleaning assembly to facilitate cleaning of a specific part of a cloth is disclosed herein. It consists of a mechanised rotatory brush(l) attached at mouth of said washing machine, a gear motor(2) and a transmission assembly(3). The transmission assembly(3) includes a belt(3A), a bearing/brush pulley(3B), a bearing holder(3C) and a motor putley(3P). A knob(5) is provided on the control panel of the washing machine to manually turn ON/OFF the mechanised rotatory brush. A soaked cloth is held against the mechanised rotatory brush so that a specific portion of the cloth is cleaned.

No. of Pages : 10 No. of Claims : 3

(12) PATENT APPLICATION PUBLICATION
(19) INDIA
(22) Date of filing of Application :15/04/2013
(21) Application No.1411/MUM/2013 A
(43) Publication Date : 17/04/2015

(54) Title of the invention : SYSTEM AND METHOD TO USE ROTATIONAL ENERGY FOR POWER GENERATION

(51) International classification	:H02P 1/00, H02P 8/00	
(31) Priority Document No	:NA	
(32) Priority Date	:NA	
(33) Name of priority country	:NA	
(86) International Application No	:NA	
Filing Date	:NA	
(87) International Publication No	: NA	
(61) Patent of Addition to Application Number	:NA	
Filing Date	:NA	
(62) Divisional to Application Number	:NA	
Filing Date	:NA	

(71)**Name of Applicant :**
1)NITNAWARE, NUPUR
Address of Applicant :INNOVATION AND ENTREPRENEURSHIP DEVELOPMENT CENTRE, SARDAR PATEL INSTITUTE OF TECHNOLOGY, BHAVANS CAMPUS, ANDHERI(WEST) MUMBAI-400058 Maharashtra India
2)MARUDKAR, PALLAVI
3)LAD, NISHA
4)SIKKA, VINOD
(72)**Name of Inventor :**
1)NITNAWARE, NUPUR
2)MARUDKAR, PALLAVI
3)LAD, NISHA

(57) Abstract :
The present invention in a preferred embodiment provides systems and methods involving a system that can convert mechanical energy to electrical energy thereby generating electricity through rotational motion of a rotatable object. The invention comprises means for storing the said generated electricity converting DC voltage to AC voltage. The generated Ac voltage is stepped up to standard AC voltage. The system can provide DC voltage and standard AC voltage for carious day to day applications.

No. of Pages : 10 No. of Claims : 14

(12) PATENT APPLICATION PUBLICATION
(19) INDIA
(22) Date of filing of Application :21/07/2014
(21) Application No.1475/MUMNP/2014 A
(43) Publication Date : 17/04/2015

(54) Title of the invention : BIOMASS GASIFICATION ISLAND PROCESS UNDER HIGH TEMPERATURE AND ATMOSPHERIC PRESSURE

(51) International classification :C10J3/02,C10J3/10,C10J3/18
(31) Priority Document No :201110449566.9
(32) Priority Date :29/12/2011
(33) Name of priority country :China
(86) International Application No :PCT/CN2012/083589
Filing Date :26/10/2012
(87) International Publication No :WO 2013/097535
(61) Patent of Addition to Application Number :NA
Filing Date :NA
(62) Divisional to Application Number :NA
Filing Date :NA

(71)**Name of Applicant :**
1)WUHAN KAIDI GENERAL RESEARCH INSTITUTE OF ENGINEERING & TECHNOLOGY CO. LTD.
Address of Applicant :Kaidi Building T1 Jiangxia Avenue Eastlake Newtech Development Zone Wuhan Hubei 430223 China
(72)**Name of Inventor :**
1)ZHANG Yanfeng
2)XIA Minggui
3)NIE Hongtao
4)LIU Wenyan
5)ZHANG Liang

(57) Abstract :
Disclosed is a biomass gasification island process under high temperature and atmospheric pressure; the process comprises: pre treatment and storage of the biomass gasification of the biomass in a gasifier cooling washing and dust extraction of gasified raw gas and storage of fresh gas. The gasification of the biomass in the gasifier employs an external heat source to provide heat and controls the reaction temperature in the gasifier to be 1300 1750°C; the gasifier employs slag tapping; the raw gas is cooled by a chilling tower and through sensible heat recovery by a two stage waste heat boiler; the cooled raw gas is subjected to treatment by washing and electric precipitation; the resulting fresh gas is stored in a gas holder; the whole gasification island device runs with a negative pressure or positive pressure of 0 50 KPa. The present process employs an external heat source for gasification thereby improving the quality of the raw gas.

No. of Pages : 26 No. of Claims : 9

(12) PATENT APPLICATION PUBLICATION
(19) INDIA
(22) Date of filing of Application :01/04/2013
(21) Application No.1265/MUM/2013 A
(43) Publication Date : 17/04/2015

(54) Title of the invention : HYDROPHILIZATION OF POLYMERS

(51) International classification	:C08J7/04, C08J7/18
(31) Priority Document No	:NA
(32) Priority Date	:NA
(33) Name of priority country	:NA
(86) International Application No	:NA
Filing Date	:NA
(87) International Publication No	: NA
(61) Patent of Addition to Application Number	:NA
Filing Date	:NA
(62) Divisional to Application Number	:NA
Filing Date	:NA

(71)**Name of Applicant :**
1)RELIANCE INDUSTRIES LIMITED
Address of Applicant :3RD FLOOR, MAKER CHAMBER-IV, 222, NARIMAN POINT, MUMBAI 400021, MAHARASHTRA, INDIA
(72)**Name of Inventor :**
1)MUNSHI PRADIP
2)KAMBLE SHASHIKANT SOPAN
3)GAJELLI CHANDRAMOULI GANGARAM
4)VENKATACHALAM SUBBIAH
5)JASRA RAKSH VIR

(57) Abstract :
A process for the hydrophilization of polymers is disclosed in the present disclosure. The hydrophilization of polymer mainly includes hydroxylation of the polymer which is accomplished by reacting the polymer with an oxidizing agent under optimized reaction conditions of temperature, time and nitrogen gas flow. The reaction conditions are advantageously optimized in order to obtain hydrophilic polymers without polymer chain degradation and thus with intact properties. The production of hydrophilic polymers without polymer chain degradation and with intact properties opens a wide range of opportunities for their further applications.

No. of Pages : 23 No. of Claims : 14

(12) PATENT APPLICATION PUBLICATION
(19) INDIA
(22) Date of filing of Application :15/04/2013
(21) Application No.1404/MUM/2013 A
(43) Publication Date : 17/04/2015

(54) Title of the invention : SYSTEM FOR PROVIDING INSTANT ASSISTANCE DURING URGENT SITUATIONS

(51) International classification	:H04W 4/22, H04W 88/02
(31) Priority Document No	:NA
(32) Priority Date	:NA
(33) Name of priority country	:NA
(86) International Application No	:NA
Filing Date	:NA
(87) International Publication No	: NA
(61) Patent of Addition to Application Number	:NA
Filing Date	:NA
(62) Divisional to Application Number	:NA
Filing Date	:NA

(71)**Name of Applicant :**
1)RAMASWAMY, APARNA
Address of Applicant :INNOVATION AND ENTREPRENEURSHIP DEVELOPMENT CENTRE SARDAR PATEL INSTITUTE OF TECHNOLOGY, MUNSHI NAGAR, BHAVAN'S CAMPUS, ANDHERI (WEST) MUMBAI 400058 Maharashtra India
2)GHURYE, ANKITA
3)KAMAT, JAGRUTI
4)GHARPURE, PRACHI
5)TALELE, KIRAN
(72)**Name of Inventor :**
1)RAMASWAMY, APARNA
2)GHURYE, ANKITA
3)KAMAT, JAGRUTI
4)GHARPURE, PRACHI
5)TALELE, KIRAN

(57) Abstract :
The present invention in a preferred embodiment provides system and methods involving a wireless communication device providing emergency aid to a user with an area not more than 50 square cm. comprising, a) atleast one clickable region; b) a gsm module; c) a gps tracking module; d) a microcontroller with inbuilt memory; e) atleast one LED; f) a wearable band; and g) a casing; wherein the clickable regions for triggering a circuit by a direct or indirect contact by the user; and wherein the gsm module is used to make calls or to send texts to multiple electronic devices in a predefined order; and wherein the gps tracking module is used to track an exact location of the user by just pressing a single button;

No. of Pages : 19 No. of Claims : 2

(12) PATENT APPLICATION PUBLICATION
(19) INDIA
(22) Date of filing of Application :15/04/2013
(21) Application No.1406/MUM/2013 A
(43) Publication Date : 17/04/2015

(54) Title of the invention : BIOMETRIC PATTERN RECOGNITION SYSTEM

(51) International classification	:G06F 21/00, G06F 17/30
(31) Priority Document No	:NA
(32) Priority Date	:NA
(33) Name of priority country	:NA
(86) International Application No	:NA
Filing Date	:NA
(87) International Publication No	: NA
(61) Patent of Addition to Application Number	:NA
Filing Date	:NA
(62) Divisional to Application Number	:NA
Filing Date	:NA

(71)**Name of Applicant :**
1)KANCHAR, AKSHAY
Address of Applicant :INNOVATION AND ENTREPRENEURSHIP DEVELOPMENT CENTRE, SARDAR PATEL INSTITUTE OF TECHNOLOGY, BHAVANS CAMPUS, MUNSHI NAGAR, ANDHERI WEST, MUMBAI - 400058, MAHARASHTRA. Maharashtra India
2)PANCHAL, DHRUV
3)SAXENA, RICHA
4)TALELE, KIRAN
(72)**Name of Inventor :**
1)KANCHAR, AKSHAY
2)PANCHAL, DHRUV
3)SAXENA, RICHA
4)TALELE, KIRAN

(57) Abstract :
Biometric identification is one of the most popular identification technologies. Our product contains the following components: Pre Processing Component, the module that reduces the noise of the original image and adjusts the sharpness of the lined pattern. Feature extraction, the module that locates the characteristic features of the biometric pattern and finally authenticates the user.

No. of Pages : 15 No. of Claims : 4

(12) PATENT APPLICATION PUBLICATION
(19) INDIA
(22) Date of filing of Application :21/07/2014
(21) Application No.1470/MUMNP/2014 A
(43) Publication Date : 17/04/2015

(54) Title of the invention : STABILIZED PTH FORMULATION

(51) International classification	:A61K38/29,A61K31/19,A61K31/198
(31) Priority Document No	:53/KOL/2012
(32) Priority Date	:20/01/2012
(33) Name of priority country	:India
(86) International Application No	:PCT/IB2013/050503
Filing Date	:19/01/2013
(87) International Publication No	:WO 2013/108235
(61) Patent of Addition to Application Number	:NA
Filing Date	:NA
(62) Divisional to Application Number	:NA
Filing Date	:NA

(71)**Name of Applicant :**
1)LUPIN LIMITED
Address of Applicant :159 CST Road Kalina Santacruz (East) State of Maharashtra India. Mumbai 400 098 Maharashtra India
(72)**Name of Inventor :**
1)DEOKAR Vaibhav Dnyaneshwar
2)APTE DESHPANDE Anjali Deepak
3)RAUT Sheetal Arvind
4)DAMODARAN Balaji
5)KARKARIA Cyrus

(57) Abstract :
Stable pharmaceutical formulations comprising human parathyroid hormone are provided. The stabilized aqueous pharmaceutical formulation comprises human parathyroid hormone and a buffer selected from lactate or glutamate. In another embodiment a stabilized aqueous pharmaceutical formulation comprising human parathyroid hormone selected from the group of (1 34) (1 37) (1 38) (1 41) a buffer selected from lactate or glutamate a stabilizing agent and a parenterally acceptable preservative wherein the said formulation is sterile and ready for parenteral administration and having pH in the range of 3 to 7 is provided.

No. of Pages : 13 No. of Claims : 10

(12) PATENT APPLICATION PUBLICATION
(19) INDIA
(22) Date of filing of Application :22/04/2013
(21) Application No.1471/MUM/2013 A
(43) Publication Date : 17/04/2015

(54) Title of the invention : METHOD OF VIDEO INTERACTION IN A SOCIAL COMPUTING BASED COMMUNITY USING SELF DESTRUCTIVE VIDEOS.

(51) International classification	:H04N 21/40, H04N5/225
(31) Priority Document No	:NA
(32) Priority Date	:NA
(33) Name of priority country	:NA
(86) International Application No	:NA
Filing Date	:NA
(87) International Publication No	: NA
(61) Patent of Addition to Application Number	:NA
Filing Date	:NA
(62) Divisional to Application Number	:NA
Filing Date	:NA

(71)**Name of Applicant :**
1)AMIT KUMAR JAIN
Address of Applicant :F-1402, ROYAL CLASSIC BUILDING, LINK ROAD, ANDHERI WEST Maharashtra India
(72)**Name of Inventor :**
1)AMIT KUMAR JAIN

(57) Abstract :
The present invention is a method of video interaction that implements sending, receiving, posting and sharing of self destructive videos over social computing based sites, applications and services. This method enables the creator of a video to set/define a self destruction condition in the metadata of the video after creation of the video and before making it available to others in a social computing based community via personal point to point messaging, one to many messaging ,post made available publically or to a customized target audience. A self destruction parameter is used to check whether the defined self destruction condition is satisfied. If the condition is satisfied, the video is automatically removed from its location, i.e. the video self destroys. Said self destructive videos, when copied or replicated, independent of the medium they are located in , possess the same self destruction parameters in the metadata which are uploaded and downloaded along with the video.

No. of Pages : 35 No. of Claims : 13

(12) PATENT APPLICATION PUBLICATION
(19) INDIA
(22) Date of filing of Application :28/03/2013
(21) Application No.1176/MUM/2013 A
(43) Publication Date : 17/04/2015

(54) Title of the invention : ANTI-ROLL BACK (ARB) SYSTEM WITH ADDITIONAL FEATURES

(51) International classification	:B60W20/00, B60G21/00
(31) Priority Document No	:NA
(32) Priority Date	:NA
(33) Name of priority country	:NA
(86) International Application No	:NA
Filing Date	:NA
(87) International Publication No	: NA
(61) Patent of Addition to Application Number	:NA
Filing Date	:NA
(62) Divisional to Application Number	:NA
Filing Date	:NA

(71)**Name of Applicant :**
1)KNORR-BREMSE SYSTEMS FOR COMMERCIALS VEHICLES INDIA PVT. LTD
Address of Applicant :KNORR-BREMSE SYSTEMS FOR COMMERCIALS VEHICLES INDIA PVT. LTD SURVEY NOS. 280 & 281, VILLAGE MANN, HINJAWADI, PHASE II, TALUKA MULSHI, PUNE-411057 M.S. INDIA Maharashtra India
(72)**Name of Inventor :**
1)ARUN BISHT
2)MAHESH SHAHAPURE
3)ATUL INGOLE
4)ABHISHEK JADHAV
5)JAYDEEP GANGURDE

(57) Abstract :
Disclosed is an anti-roll back (ARB) system suitable for manual transmission vehicles. The ARB system comprises an exhaust brake system. The exhaust brake system comprises a third reservoir, an exhaust brake valve operated by pressurized air from the third reservoir, a first solenoid valve for the exhaust brake valve, a second solenoid valve, a double check valve, a proximity sensor and a load lever. The ARB system is modified for actuating exhaust brake valve on negative inclinations, preventing rear end collision of the vehicle, lowering of a tipper body and for preventing rolling down of the vehicles on uphill or downhill thereby preventing the frequently occurring accidents of commercial vehicles and thus increasing the safety of the vehicle as well of the driver.

No. of Pages : 26 No. of Claims : 7

(12) PATENT APPLICATION PUBLICATION
(19) INDIA
(22) Date of filing of Application :21/07/2014
(21) Application No.1473/MUMNP/2014 A
(43) Publication Date : 17/04/2015

(54) Title of the invention : BIOMASS SYNGAS PURIFICATION PROCESS UNDER NEGATIVE PRESSURE FOR PRODUCING OIL AND SYSTEM CONFIGURATION THEREOF

(51) International classification :C10K1/00,C10K1/02,C10K1/06
(31) Priority Document No :201110449373.3
(32) Priority Date :29/12/2011
(33) Name of priority country :China
(86) International Application No:PCT/CN2012/083536
Filing Date :26/10/2012
(87) International Publication No :WO 2013/097531
(61) Patent of Addition to Application Number :NA
Filing Date :NA
(62) Divisional to Application Number :NA
Filing Date :NA

(71)**Name of Applicant :**
1)WUHAN KAIDI GENERAL RESEARCH INSTITUTE OF ENGINEERING & TECHNOLOGY CO. LTD.
Address of Applicant :Kaidi Building T1 Jiangxia Avenue Eastlake Newtech Development Zone Wuhan Hubei 430223 China
(72)**Name of Inventor :**
1)ZHANG Yanfeng
2)NIE Hongtao
3)XIA Minggui
4)LIU Wenyan
5)ZHANG Liang

(57) Abstract :
Provided is a biomass syngas purification process under negative pressure for producing oil and the system thereof. In the process a high temperature syngas extracted from a gasifier enters a water cooled chilling tower via a water cooled flue and the gas is partly chilled to solidify slag by spraying water; the waste heat is recovered by a waste heat boiler of a water tube type and a waste heat boiler of a heat tube type in two stages with double pressure; the by products middle pressure steam and low pressure steam are ejected externally; after the heavy tar is condensed and recovered by the waste heat boiler of the heat tube type scrubbing and dust extraction by a Venturi scrubber without padding deep dust extraction by a wet electrostatic precipitator and purification by removing tar fog are performed; then the resulting product is extracted by a gas fan and sent to a wet gas holder for storage or supplied for use down stream. The purification aims of cooling of the syngas in stages gradient recycling use of waste heat dust extraction in steps and tar removal are achieved and the technical problems of a complex system long flow high energy consumption low efficiency and poor stability and economy are resolved by optimizing the process and controlling the appropriate process parameters.

No. of Pages : 16 No. of Claims : 6

(12) PATENT APPLICATION PUBLICATION
(19) INDIA
(22) Date of filing of Application :22/04/2013
(21) Application No.1475/MUM/2013 A
(43) Publication Date : 17/04/2015

(54) Title of the invention : A GREENHOUSE ENVIRONMENT CONTROL SYSTEM

(51) International classification	:A01G9/24, G05D22/02
(31) Priority Document No	:NA
(32) Priority Date	:NA
(33) Name of priority country	:NA
(86) International Application No	:NA
Filing Date	:NA
(87) International Publication No	: NA
(61) Patent of Addition to Application Number	:NA
Filing Date	:NA
(62) Divisional to Application Number	:NA
Filing Date	:NA

(71)**Name of Applicant :**
1)BHARATI VIDYAPEETH DEEMED UNIVERSITY
Address of Applicant :COLLEGE OF ENGINEERING, DHANAKWADI, PUNE - SATARA ROAD, KATRAJ, PUNE - 411043, MAHARASHTRA, INDIA
(72)**Name of Inventor :**
1)DAWANDE NITIN
2)MULIK VINOD

(57) Abstract :
A greenhouse environment control system for optimizing the greenhouse environment, the system comprising: sensors located in the greenhouse to sense greenhouse environmental parameters and generate corresponding signals; a first wireless transceiver unit connected to the sensors and wirelessly transmitting data corresponding to the signals; a second wireless transceiver unit wirelessly receiving the data; and an FPGA connected to the second transceiver unit, the FPGA monitoring the data and generating control signals based on the data to control the greenhouse environmental parameters, wherein the FPGA generates control signals based on the data to control greenhouse infrastructural components, the quantity of water provided to the crops/plants in the greenhouse, to maintain the pH of the soil in the greenhouse, and to harvest the crops for packaging.

No. of Pages : 28 No. of Claims : 15

(12) PATENT APPLICATION PUBLICATION
(19) INDIA
(22) Date of filing of Application :22/04/2013
(21) Application No.1476/MUM/2013 A
(43) Publication Date : 17/04/2015

(54) Title of the invention : METHOD OF OPTIMISING INPUT COMPONENTS

(51) International classification	:H01L29/00, H03F3/04
(31) Priority Document No	:1207989.3
(32) Priority Date	:04/05/2012
(33) Name of priority country	:GB
(86) International Application No	:NA
Filing Date	:NA
(87) International Publication No	: NA
(61) Patent of Addition to Application Number	:NA
Filing Date	:NA
(62) Divisional to Application Number	:NA
Filing Date	:NA

(71)**Name of Applicant :**
1)CONTROL TECHNIQUES LTD
Address of Applicant :THE GRO, POOL ROAD, NEWTOWN POWYS, SY16 3BE, UNITED KINGDOM
(72)**Name of Inventor :**
1)HARGIS, COLIN

(57) Abstract :
A method of controlling a current flowing through a component of a drive comprising the steps of: estimating the current flowing through a component; estimating the temperature of the component; comparing the estimated temperature with a desired maximum temperature for the component; and adjusting the current flowing through the component based on the result of the comparing step.

No. of Pages : 24 No. of Claims : 23

(12) PATENT APPLICATION PUBLICATION
(19) INDIA
(22) Date of filing of Application :21/07/2014
(21) Application No.1477/MUMNP/2014 A
(43) Publication Date : 17/04/2015

(54) Title of the invention : MICROWAVE PLASMA BIOMASS GASIFYING FIXED BED GASIFIER AND PROCESS

(51) International classification :C10J3/02,C10J3/18,C10J3/20
(31) Priority Document No :201110449459.6
(32) Priority Date :29/12/2011
(33) Name of priority country :China
(86) International Application No :PCT/CN2012/083569
Filing Date :26/10/2012
(87) International Publication No :WO 2013/097534
(61) Patent of Addition to Application Number :NA
Filing Date :NA
(62) Divisional to Application Number :NA
Filing Date :NA

(71)**Name of Applicant :**
1)WUHAN KAIDI GENERAL RESEARCH INSTITUTE OF ENGINEERING & TECHNOLOGY CO. LTD.
Address of Applicant :Kaidi Building T1 Jiangxia Avenue Eastlake Newtech Development Zone Wuhan Hubei 430223 China
(72)**Name of Inventor :**
1)CHEN Yilong
2)ZHANG Yanfeng
3)XIA Minggui
4)ZHANG Liang

(57) Abstract :
A microwave plasma biomass gasifying fixed bed gasifier comprising a vertically arranged gasifier body (2). The upper part of the gasifier body (2) is a gasifier clearance area (8). The lowest part of the gasifier body (2) is a fixed bed layer. Provided on the gasifier body are a raw material and fuel inlet a product gas outlet an oxygen/steam inlet (4 and 5). Provided at the bottom part of the gasifier body is a slug discharging outlet (7). Arranged at the product gas outlet is a synthesis gas monitoring unit (6). Arranged on the gasifier body is at least one section of microwave plasma generator (3). Also provided is a biomass gasification process utilizing the gasifier. The process comprises: 1) a biomass is fed into the gasifier via a feeder apparatus and gasified on the microwave plasma fixed bed layer; a biomass fixed carbon content is subjected to a combustion reaction in an oxidation area on the bed layer a high temperature flue gas is generated the flue gas is transmitted upwards to a feeder area to heat a fuel fed into the gasifier while at the same time is subjected to a chemical reaction with high temperature steam injected from the lower layer oxygen/steam nozzle and an activity rich microwave plasma activated oxidizer of a first section microwave plasma generator where the temperature of a reaction area is controlled between 700°C and 1600°C; 2) a synthesis gas generated from the reaction is transmitted upwards to the clearance area and is further cracked via a second section microwave plasma generator; 3) a residual coke substance is transmitted downwards to the fixed bed layer to gradually release heat to maintain bed temperature a burned biomass slag is discharged outside the gasifier via the slag discharging outlet; and 4) online monitoring is implemented via the synthesis gas monitoring unit arranged at the product gas outlet at the top part of the gasifier.

No. of Pages : 15 No. of Claims : 9

(12) PATENT APPLICATION PUBLICATION
(19) INDIA
(22) Date of filing of Application :22/04/2013
(21) Application No.1478/MUM/2013 A
(43) Publication Date : 17/04/2015

(54) Title of the invention : A BIOSYNTHESIS METHOD FOR LARGE AREA PREPARATION OF SILVER THIN FILM CONTAINING NANOPARTICLES

(51) International classification	:C22C 5/06, B22F 1/00
(31) Priority Document No	:NA
(32) Priority Date	:NA
(33) Name of priority country	:NA
(86) International Application No	:NA
Filing Date	:NA
(87) International Publication No	: NA
(61) Patent of Addition to Application Number	:NA
Filing Date	:NA
(62) Divisional to Application Number	:NA
Filing Date	:NA

(71)**Name of Applicant :**
1)PROF. CHANDRAKANT DNYANDEV LOKHANDE
Address of Applicant :THIN FILM PHYSICS LABORATORY, DEPARTMENT OF PHYSICS, SHIVAJI UNIVERSITY, KOLHAPUR, 416 004 Maharashtra India
(72)**Name of Inventor :**
1)PROF. CHANDRAKANT DNYANDEV LOKHANDE
2)MR. NANASAHEB MADHUKAR SHINDE
3)MR. ABHISHEK CHANDRAKANT LOKHANDE
4)PROF. JAYDEEP SHANTIKUMAR BAGI

(57) Abstract :
The present investigation is related to the biosynthesis method for preparation of nanocrystalline and compact silver thin films onto glass substrates. Silver thin films containing nanoparticles have been deposited onto the large area glass substrates from the acidic bath at different temperatures using solution of AgNO3 and guava leaves extract. As confirmed from X-ray diffraction (XRD) pattern and scanning electron microscopy (SEM) images, silver thin films with nanoparticles have been deposited with unequal sized circular grain morphology. The absorbance peak of the sample at λ max, 450 nm, is associated with the characteristics peak of silver nanoparticles. The maximum value of transmission is around 80 %.

No. of Pages : 15 No. of Claims : 10

(12) PATENT APPLICATION PUBLICATION
(19) INDIA
(22) Date of filing of Application :28/04/2013
(21) Application No.1183/MUM/2013 A
(43) Publication Date : 17/04/2015

(54) Title of the invention : VEHICLE SPEED PROFILE ADAPTED SOOT BURNING METHOD TO ENHANCE REGENERATION EFFICIENCY

(51) International classification	:F02D21/04, F02D43/00, F02M25/07
(31) Priority Document No	:NA
(32) Priority Date	:NA
(33) Name of priority country	:NA
(86) International Application No	:NA
Filing Date	:NA
(87) International Publication No	: NA
(61) Patent of Addition to Application Number	:NA
Filing Date	:NA
(62) Divisional to Application Number	:NA
Filing Date	:NA

(71)**Name of Applicant :**
1)MAHINDRA & MAHINDRA LIMITED
Address of Applicant :R & D CENTER, AUTOMOTIVE SECTOR, 89, M.I.D.C., SATPUR, NASHIK-422 007, MAHARASHTRA, INDIA.
(72)**Name of Inventor :**
1)K. SENTHUR PANDIAN
2)C. VASUDEVAN

(57) Abstract :
Vehicle speed profile adapted soot burning method to enhance regeneration efficiency comprises the steps of calibration of the duration of the regeneration; taking the inputs of the vehicle speed as a correction factor for the soot burning rate; and then optimizes the regeneration efficiency and the regeneration duration for the optimum results; wherein the regeneration input based on the vehicle speed involves in the identfication of the cycle where the soot loading pattern has occurred.

No. of Pages : 11 No. of Claims : 3

(12) PATENT APPLICATION PUBLICATION
(19) INDIA
(22) Date of filing of Application :16/04/2013
(21) Application No.1418/MUM/2013 A
(43) Publication Date : 17/04/2015

(54) Title of the invention : A BUSINESS GAMIFICATION SYSTEM AND METHOD

(51) International classification	:G06F21/00, G06F15/16
(31) Priority Document No	:NA
(32) Priority Date	:NA
(33) Name of priority country	:NA
(86) International Application No	:NA
Filing Date	:NA
(87) International Publication No	: NA
(61) Patent of Addition to Application Number	:NA
Filing Date	:NA
(62) Divisional to Application Number	:NA
Filing Date	:NA

(71)**Name of Applicant :**
1)OPTIC BRIDGE TECHNOLOGIES PRIVATE LIMITED
Address of Applicant :B-1207/1208 BHOOMI SAMKIT, MAHAVIR NAGAR, KANDIVALI (WEST), MUMBAI 400 067 MAHARASHTRA, INDIA
(72)**Name of Inventor :**
1)PAREKH VIKRAM

(57) Abstract :
A business Gamification system comprises: at least a business database module adapted to store at least a defined business items; at least a steps database module adapted to store at least a step for each of said stored business items; at least a node definition means adapted to define nodes which are resources for each defined step per business item; at least a resource selection mechanism adapted to allow a user to select at least a resource from said defined nodes; and at least a connection mechanism adapted to allow real-time instantaneous or scheduled connection with a selected resource.

No. of Pages : 28 No. of Claims : 12

(12) PATENT APPLICATION PUBLICATION
(19) INDIA
(22) Date of filing of Application :22/04/2013
(21) Application No.1481/MUM/2013 A
(43) Publication Date : 17/04/2015

(54) Title of the invention : MULTI COMPONENT IN PARTICULAR TWO COMPONENT PLASTIC PALLET

(51) International classification	:B65D 19/00, B65D 19/18
(31) Priority Document No	:201210193797.2
(32) Priority Date	:08/06/2012
(33) Name of priority country	:China
(86) International Application No	:NA
Filing Date	:NA
(87) International Publication No	: NA
(61) Patent of Addition to Application Number	:NA
Filing Date	:NA
(62) Divisional to Application Number	:NA
Filing Date	:NA

(71)**Name of Applicant :**
1)Schoeller Arca Systems GmbH
Address of Applicant :Sacktannen 1, 19057 Schwerin, Germany.
(72)**Name of Inventor :**
1)Richard, kellerer

(57) Abstract :
The invention relates to a plastic pallet (50) which includes support elements (53) between a loading surface (51) and a stand surface which is assembled from plural components (51, 52), in particular two pallet components. According to the invention the support elements 53 are formed from two support members 55, 56 interacting in pairs, wherein one support member is configured at the upper cover plate and one support member is configured at the lower base plate. Through these support elements the two pallet components are insertable into one another and are connectable. Thus, the connection is provided according to the invention through two engagement element (57, 65), wherein one engagement element is arranged at the upper support member and one is arranged at the lower support member. Figure 2 is the representative figure.

No. of Pages : 15 No. of Claims : 8

(12) PATENT APPLICATION PUBLICATION
(19) INDIA
(22) Date of filing of Application :22/07/2014
(21) Application No.1481/MUMNP/2014 A
(43) Publication Date : 17/04/2015

(54) Title of the invention : MICROCHIP UNDER VACUUM

(51) International classification :B01L3/00
(31) Priority Document No :2012-023207
(32) Priority Date :06/02/2012
(33) Name of priority country :Japan
(86) International Application No :PCT/JP2013/000472
Filing Date :30/01/2013
(87) International Publication No :WO 2013/118461
(61) Patent of Addition to Application Number :NA
Filing Date :NA
(62) Divisional to Application Number :NA
Filing Date :NA

(71)**Name of Applicant :**
1)SONY CORPORATION
Address of Applicant :1 7 1 Konan Minato ku Tokyo 1080075 Japan
(72)**Name of Inventor :**
1)MATSUMOTO Masahiro
2)OHNISHI MICHIHIRO
3)KATO Yoshiaki
4)WATANABE Toshio

(57) Abstract :
A microchip is provided and configured to contain a sample solution for analysis. The microchip including a channel that is maintained at a pressure level less than atmospheric pressure so as to allow flow of the sample solution thru the channel; and a pressure indication section configured to detect a change in the pressure level. A microchip apparatus and a method of manufacturing a microchip are also provided.

No. of Pages : 34 No. of Claims : 21

(12) PATENT APPLICATION PUBLICATION
(19) INDIA
(22) Date of filing of Application :23/04/2013
(21) Application No.1482/MUM/2013 A
(43) Publication Date : 17/04/2015

(54) Title of the invention : METHOD FOR PRODUCTION OF 2, 3-DIHYDROXY-1,2- BENZISOTHIAZOL-3-ONE-1,1-DIOXIDE

(51) International classification	:C07D471/04	(71)**Name of Applicant :**
(31) Priority Document No	:NA	**1)OMKAR SPECIALITY CHEMICALS LTD.**
(32) Priority Date	:NA	Address of Applicant :B-34, M.I.D.C. BADLAPUR (E),
(33) Name of priority country	:NA	DIST-THANE, MAHARASHTRA, PIN CODE: 421503, INDIA
(86) International Application No	:NA	Maharashtra India
Filing Date	:NA	(72)**Name of Inventor :**
(87) International Publication No	: NA	**1)HERLEKAR; OMKAR PARVIN**
(61) Patent of Addition to Application Number	:NA	**2)DURVE; KETAKEE SANJAY**
Filing Date	:NA	
(62) Divisional to Application Number	:NA	
Filing Date	:NA	

(57) Abstract :
An improved method for preparation of 2,3-dihydroxy-I)2-benzisothiazol-3-one-I,l-dioxide from alky! anthranilate and alkali metal salt of nitrous acid via formation of respective diazonium salt. This diazonium salt is reacted with in-situ generated sulphur dioxide. The organic phase is treated with an oxidizing agent followed by amidation.

No. of Pages : 13 No. of Claims : 13

(12) PATENT APPLICATION PUBLICATION
(19) INDIA
(22) Date of filing of Application :11/04/2013

(21) Application No.1361/MUM/2013 A
(43) Publication Date : 17/04/2015

(54) Title of the invention : CIRCUIT EXTRACTION AND TESTING METHODOLOGY OF PRE-BUILT PCB

(51) International classification	:H05K7/14, B25B9/00
(31) Priority Document No	:NA
(32) Priority Date	:NA
(33) Name of priority country	:NA
(86) International Application No	:NA
Filing Date	:NA
(87) International Publication No	: NA
(61) Patent of Addition to Application Number	:NA
Filing Date	:NA
(62) Divisional to Application Number	:NA
Filing Date	:NA

(71)**Name of Applicant :**
1)G.H.RAISONI COLLEGE OF ENGINEERING
Address of Applicant :CRPF Gate No. 3,Digdoh Hills,Hingna Road,Nagpur Maharashtra-440016 Maharashtra India
2)G.H.R. Labs and Research Centre
(72)**Name of Inventor :**
1)Shashi Som Sinha
2)Somesh Diwanji
3)Supankaj Shrivastava
4)Vaibhav Vasani
5)S U Nimbhorkar

(57) Abstract :
Following invention aims to develop software which performs the actual circuit extraction. The input required for the software would be the actual image of the backside of the PCB shot by the user taken by a camera and the original image from any of PCB layout designing software for comparison. The aim is to develop process that would point out errors in the developed PCB. The software should work on the images fed to it and then reveal the errors in the circuit.

No. of Pages : 11 No. of Claims : 4

(12) PATENT APPLICATION PUBLICATION
(19) INDIA
(22) Date of filing of Application :23/04/2013
(21) Application No.1486/MUM/2013 A
(43) Publication Date : 17/04/2015

(54) Title of the invention : METHOD AND DEVICE FOR OPERATING WORKSTATIONS OF AN OPEN-END ROTOR SPINNING MACHINE

(51) International classification	:D01H 4/48, D01H4/50
(31) Priority Document No	:102012008691.1
(32) Priority Date	:28/04/2012
(33) Name of priority country	:Germany
(86) International Application No	:NA
Filing Date	:NA
(87) International Publication No	: NA
(61) Patent of Addition to Application Number	:NA
Filing Date	:NA
(62) Divisional to Application Number	:NA
Filing Date	:NA

(71)**Name of Applicant :**
1)OERLIKON TEXTILE GMBH & CO. KG
Address of Applicant :LEVERKUSER STRASSE 65, D-42897 REMSCHEID, GERMANY
(72)**Name of Inventor :**
1)WASSENHOVEN, HEINZ-GEORG

(57) Abstract :
Workstations of this type in each case have an open-end spinning device for producing a thread, a winding device for producing a cross-wound bobbin as well as a pivotably mounted first suction nozzle, which can be adjusted by means of a single drive between a thread receiving position in the region of the cross-wound bobbin and a thread transfer position in the region of the open-end spinning device. According to the invention, it is provided that on reaching a predeterminable diameter (D) of the cross-wound bobbin (8), the winding process of the cross-wound bobbin (8) is interrupted by the workstation (1) and a cross-wound bobbin/empty tube change is initiated, in which the thread (9) produced by the open-end spinning device (2) is firstly temporarily disposed of by a second suction nozzle (11), which can be positioned as required by a drive mechanism (13) in the region of the winding device (3) of the workstation (1), the cross-wound bobbin (8) is transferred by corresponding activation of a creel (22) to a transporting mechanism particular to the spinning machine, a creel (22) is equipped with a new empty tube (33) from an empty tube magazine particular to the workstation and finally the creel (22) is pivoted back into a winding position, and in that the movably mounted second suction nozzle (11) is then positioned in such a way that the thread (9) running into the second suction nozzle (11) is transferred to the empty tube (33) held in the creel (22) and the winding process onto the new empty tube (33) is started again.

No. of Pages : 21 No. of Claims : 12

(12) PATENT APPLICATION PUBLICATION
(19) INDIA
(22) Date of filing of Application :22/07/2014
(21) Application No.1487/MUMNP/2014 A
(43) Publication Date : 17/04/2015

(54) Title of the invention : COLLECTOR FOR HUMAN FECES

(51) International classification :A61F5/452,A61F5/44,A61F5/458
(31) Priority Document No :NA
(32) Priority Date :NA
(33) Name of priority country :NA
(86) International Application No :PCT/KR2012/000192
Filing Date :09/01/2012
(87) International Publication No :WO 2013/105677
(61) Patent of Addition to Application Number :NA
Filing Date :NA
(62) Divisional to Application Number :NA
Filing Date :NA

(71)**Name of Applicant :**
1)KIM Kyoung Hun
Address of Applicant :117 104 Jangan Hyundai Hometown 170 Jangan Butgotro Dongdaemun gu Seoul 130 719 Republic of Korea
(72)**Name of Inventor :**
1)KIM Kyoung Hun

(57) Abstract :
The present invention relates to a collector for human feces consisting of: a fixing plate (100) comprising a C shaped left plate (101) and a C shaped right plate (101) of which the ends are connected to each other so as to have a penetrated central portion and be folded over each other; a feces collection bag (200) of which the end is fixed to one lateral side of the fixing plate (100) and which ordinarily is rolled to be inserted between the folded C shaped left plate (101) and C shaped right plate (101) of the fixing plate (100) and is pushed out from a penetrated hole of the fixing plate (100) when feces is injected; and an adhesion means (300). Since the feces collection bag does not come in contact with the anus when worn on the anus the good wearing sensation can ease defecation.

No. of Pages : 37 No. of Claims : 21

(12) PATENT APPLICATION PUBLICATION
(19) INDIA
(22) Date of filing of Application :28/04/2013
(21) Application No.1184/MUM/2013 A
(43) Publication Date : 17/04/2015

(54) Title of the invention : MOBILE TEST BENCH FOR DRAG AND WHINE NOISE MEASUREMENT

(51) International classification :G01M15/14,G01M13/02
(31) Priority Document No :NA
(32) Priority Date :NA
(33) Name of priority country :NA
(86) International Application No :NA
Filing Date :NA
(87) International Publication No : NA
(61) Patent of Addition to Application Number :NA
Filing Date :NA
(62) Divisional to Application Number :NA
Filing Date :NA

(71)**Name of Applicant :**
1)MAHINDRA & MAHINDRA LIMITED
Address of Applicant :R & D CENTER, AUTOMOTIVE SECTOR, 89, M.I.D.C., SATPUR, NASHIK-422 007, MAHARASHTRA, INDIA.
(72)**Name of Inventor :**
1)MANSINH KUMBHAR
2)RAJKUMAR PADMANNA BHAGATE
3)KIRAN MOHAN
4)NIKHIL SHINDE
5)REGHURAM C.

(57) Abstract :
The invention relates to a mobile platform provided test bench for drag and whine noise measurement. The test bench comprises cardan shaft mounted in a pair of first set bearing with centre tripod joint. At one end of said shaft a motor to drive by means of belt provided to drive the said shaft. The other end of the said shaft a hook joint attached to connect to driving end of magnetic clutch supported on a pair of second set of bearings. A clamping means provided to the driven end magnetic clutch to connect transmission device under test. The mobile test bench is also provided with a sliding table for increasing the torque fluctuations online to identify the critical angular acceleration of a given transmission / transaxle.

No. of Pages : 8 No. of Claims : 2

(12) PATENT APPLICATION PUBLICATION
(19) INDIA
(22) Date of filing of Application :28/04/2013
(21) Application No.1185/MUM/2013 A
(43) Publication Date : 17/04/2015

(54) Title of the invention : SLOT COLLAR TYPE GUIDER FOR SMOOTH SHIFTING IN THE GEAR BOX

(51) International classification	:F16H 21/36, E21B31/18
(31) Priority Document No	:NA
(32) Priority Date	:NA
(33) Name of priority country	:NA
(86) International Application No	:NA
Filing Date	:NA
(87) International Publication No	: NA
(61) Patent of Addition to Application Number	:NA
Filing Date	:NA
(62) Divisional to Application Number	:NA
Filing Date	:NA

(71)**Name of Applicant :**
1)MAHINDRA & MAHINDRA LIMITED
Address of Applicant :R & D CENTER, AUTOMOTIVE SECTOR, 89, M.I.D.C., SATPUR, NASHIK-422 007, MAHARASHTRA, INDIA.
(72)**Name of Inventor :**
1)MANSINH KUMBHAR
2)RAJKUMAR PADMANNA BHAGATE
3)KIRAN MOHAN
4)JIBIN PAUL K

(57) Abstract :
The invention relates to a slot collar type guider for smooth shifting in the gear box to be provided in the gear box engaging the shifting cross for smooth shifting of the said cross from 2nd to 3rd & 3rd to 2nd gear shifting.. The said slot collar type guider comprises annular ring having collar at inner diameter extending one side having the four or more even number of slots to the said ring and collar.

No. of Pages : 10 No. of Claims : 3

(12) PATENT APPLICATION PUBLICATION
(19) INDIA
(22) Date of filing of Application :12/04/2013

(21) Application No.1369/MUM/2013 A
(43) Publication Date : 17/04/2015

(54) Title of the invention : A WATER FILTER

(51) International classification	:C02F1/00, B01D	(71)**Name of Applicant :**
(31) Priority Document No	:NA	**1)TATA CHEMICALS LIMITED**
(32) Priority Date	:NA	Address of Applicant :BOMBAY HOUSE, 24 HOMI MODY STREET, MUMBAI, INDIA Maharashtra India
(33) Name of priority country	:NA	(72)**Name of Inventor :**
(86) International Application No	:NA	**1)DAVE, UJAS P.**
Filing Date	:NA	**2)SHAH, JIGNESH**
(87) International Publication No	: NA	**3)SINGH, RAMESH**
(61) Patent of Addition to Application Number	:NA	**4)TIWARI, UMESH**
Filing Date	:NA	**5)PARMAR, PAUL**
(62) Divisional to Application Number	:NA	
Filing Date	:NA	

(57) Abstract :
A gravity based water purifier is disclosed. The said gravity based water purifier comprises an outer casing defining a purifier inlet for receiving water to be purified and a purifier outlet for outflow of purified water. The outer casing further defines a receptacle for receiving a cartridge holding a purification medium, a cavity for receiving an end of life assembly and a passage for providing a fluid communication under gravity between the purifier inlet and the cartridge. Herein, the cartridge defines a top surface and a bottom surface and includes a cartridge inlet positioned proximate the bottom surface for receiving water to be purified from the purifier inlet through the passage and a cartridge outlet positioned proximate the top surface for delivering the purified water therefrom, such that the water to be purified flows in an upward direction through the purification medium in the cartridge. The end of life assembly comprises an assembly inlet and an assembly outlet, the assembly inlet positioned proximate the cartridge outlet and configured to receive the purified water therefrom, the assembly outlet positioned proximate the purifier outlet, such that the purified water flows downward unidirectionally under gravity through the end of life assembly before exiting the water purifier through the purifier outlet.

No. of Pages : 23 No. of Claims : 12

(12) PATENT APPLICATION PUBLICATION
(19) INDIA
(22) Date of filing of Application :23/07/2014
(21) Application No.1490/MUMNP/2014 A
(43) Publication Date : 17/04/2015

(54) Title of the invention : SELECTIVELY MULTIPLEXING COMMUNICATION STREAMS

(51) International classification :H04L29/06,H04W4/06
(31) Priority Document No :61/581,581
(32) Priority Date :29/12/2011
(33) Name of priority country :U.S.A.
(86) International Application No :PCT/US2012/071997
Filing Date :28/12/2012
(87) International Publication No :WO 2013/102029
(61) Patent of Addition to Application Number :NA
Filing Date :NA
(62) Divisional to Application Number :NA
Filing Date :NA

(71)**Name of Applicant :**
1)QUALCOMM INCORPORATED
Address of Applicant :Attn: International Ip Administration 5775 Morehouse Drive San Diego California 92121 U.S.A.
(72)**Name of Inventor :**
1)ANCHAN Kiran
2)MAGGENTI Mark
3)LIN Yih Hao
4)SANTHANAM Arvind

(57) Abstract :
In an embodiment a network device obtains a plurality of data packets that are each associated with one of a plurality of different streams wherein each of the plurality of obtained data packets includes a header portion with stream specific routing information. The network device strips the stream specific routing information from the plurality of obtained data packets to produce a plurality of stream specific payload portions which are merged into a shared payload portion of a stream multiplexed data packet that includes common routing information for the plurality of streams in a common header portion. The network device transmits the stream multiplexed packet to a target device and the target device determines whether any of the plurality of different streams are relevant to the target UE based on stream mapping information contained in the stream multiplexed packet and selectively decodes and processes the stream specific payload portions corresponding based on the determination.

No. of Pages : 54 No. of Claims : 54

(12) PATENT APPLICATION PUBLICATION
(19) INDIA
(22) Date of filing of Application :22/07/2014
(21) Application No.1482/MUMNP/2014 A
(43) Publication Date : 17/04/2015

(54) Title of the invention : TRANSMISSION DEVICE TRANSMISSION METHOD RECEPTION DEVICE RECEPTION METHOD PROGRAM AND ELECTRONIC DEVICE

(51) International classification :H04N7/173,H04N7/167
(31) Priority Document No :2012-024454
(32) Priority Date :07/02/2012
(33) Name of priority country :Japan
(86) International Application No :PCT/JP2013/050700
Filing Date :16/01/2013
(87) International Publication No :WO 2013/118545
(61) Patent of Addition to Application Number :NA
Filing Date :NA
(62) Divisional to Application Number :NA
Filing Date :NA

(71)**Name of Applicant :**
1)SONY CORPORATION
Address of Applicant :1 7 1 Konan Minato Ku Tokyo 1080075 Japan
(72)**Name of Inventor :**
1)SEKINE Kazutoyo
2)SATO Masahiko
3)IKEDA Tamotsu

(57) Abstract :
Transmission of a transport stream to an external device is effectively performed in the present invention. A transport stream including in a time multiplexed manner PID data packets for a plurality of service channels is inputted. A time stamp corresponding to the inputted time is applied to PID packets remaining after the PID data packets are removed from the service channels selected (tuned) for the transport stream. The PID packets to which the time stamp is applied are sequentially transmitted to an external device. The transmission bit rate can be kept low. The PID packets returned from the external device are returned to their original time positions in accordance with the time stamp allowing simple reconfiguration of the transport stream.

No. of Pages : 41 No. of Claims : 16

(12) PATENT APPLICATION PUBLICATION
(19) INDIA
(22) Date of filing of Application :23/04/2013
(21) Application No.1483/MUM/2013 A
(43) Publication Date : 17/04/2015

(54) Title of the invention : MULTI-HIGH ROLLING MILL EQUIPPED WITH WORK ROLL SHIFT FUNCTION

(51) International classification	:B21B13/14, B21B27/03
(31) Priority Document No	:2012-099721
(32) Priority Date	:25/04/2012
(33) Name of priority country	:Japan
(86) International Application No	:NA
Filing Date	:NA
(87) International Publication No	: NA
(61) Patent of Addition to Application Number	:NA
Filing Date	:NA
(62) Divisional to Application Number	:NA
Filing Date	:NA

(71)**Name of Applicant :**
1)MITSUBISHI-HITACHI METALS MACHINERY, INC.
Address of Applicant :34-6, SHIBA 5-CHOME, MINATO-KU, TOKYO 1080014, JAPAN
(72)**Name of Inventor :**
1)TAKASHI NORIKURA
2)FUMIHISA SHIMAYA

(57) Abstract :
A multi-high rolling mill equipped with a work roll shift function where thrust bearings are effectively installed so that the shifting function of small-diameter work rolls can be achieved with a simple mechanism is provided. A pair of upper and lower work rolls (2a, 2b) are provided with tapered portions (22a, 22b) in upper and lower positions in point symmetry; end faces of the respective work rolls are supported by two upper and lower thrust bearings (8a to 8d) on each of an operation side and a drive side; long holes (38a to 38d) are formed in inner-race side shafts (37a to 37d) of bearing boxes (10a to l0d) pivotally supporting the respective thrust bearings, respectively, such that the respective thrust bearings are movable individually together with the respective bearing boxes in roll axial directions; coupling bars (9a, 9b) each penetrating the corresponding long holes to restrict vertical displacements of the corresponding two upper and lower thrust bearings are provided between the respective bearing boxes; first roll shift devices (13a to 13d, 11a to 11d) connected to the respective bearing boxes to shift the respective work rolls in the roll axial directions are provided; and taper start positions SP of the tapered portions of the respective work rolls are shifted to vicinities of insides of strip widthwise ends or vicinities of outsides of strip widthwise ends.

No. of Pages : 47 No. of Claims : 7

(12) PATENT APPLICATION PUBLICATION
(19) INDIA
(22) Date of filing of Application :22/07/2014
(21) Application No.1483/MUMNP/2014 A
(43) Publication Date : 17/04/2015

(54) Title of the invention : METHOD FOR ACCELERATING BACTERIAL BIOMASS GROWTH AND ATTENUATING THE VIRULENCE OF BACTERIA

(51) International classification :C12N1/20,C12N1/38,C12P1/04
(31) Priority Document No :NA
(32) Priority Date :NA
(33) Name of priority country :NA
(86) International Application No :PCT/RU2011/001060
Filing Date :28/12/2011
(87) International Publication No :WO 2013/100792
(61) Patent of Addition to Application Number :NA
Filing Date :NA
(62) Divisional to Application Number :NA
Filing Date :NA

(71)**Name of Applicant :**
1)MARTYNOV Artur Viktorovich
Address of Applicant :ul. Korchagincev 1 18 Kharkov 61171 Ukraine
2)FARBER Boris Slavinovich
3)FARBER Sofya Borisovna
(72)**Name of Inventor :**
1)MARTYNOV Artur Viktorovich
2)FARBER Boris Slavinovich
3)FARBER Sofya Borisovna

(57) Abstract :
The invention relates to biotechnology and medicine. The method for accelerating biomass growth and attenuating the virulence of bacteria involves using intracellular protein phosphorylation inducers including the cyclic adenosine monophosphate accumulation activators papaverine bendazole and dipyridamole in the form of salts or bases as inhibitors of the virulence of microorganisms. A mixture of intracellular protein phosphorylation inducers is used as low molecular weight accelerators of microorganism growth. Papaverine bendazole and dipyridamole in the form of salts or bases in specific concentrations are used as a cyclic adenosine monophosphate accumulation activator mixture. In order to attenuate the virulence of bacteria the mixture is administered to a contagious patient parenterally perorally rectally or by application to the affected region 1 10 days prior to administration of an antibiotic or in parallel therewith.

No. of Pages : 28 No. of Claims : 18

(12) PATENT APPLICATION PUBLICATION
(21) Application No.1372/MUM/2013 A
(19) INDIA
(22) Date of filing of Application :12/04/2013
(43) Publication Date : 17/04/2015

(54) Title of the invention : METHOD OF ACQUIRING AND PROVIDING EMPLOYMENT USING VIDEOS IN A SOCIAL COMPUTING BASED COMMUNITY AND ENVIRONMENT

(51) International classification	:G06F17/30, H04N7/24	(71)**Name of Applicant :**
(31) Priority Document No	:NA	**1)AMIT KUMAR JAIN**
(32) Priority Date	:NA	Address of Applicant :F1402, ROYAL CLASSIC BUILDING, LINK ROAD, ANDHERI WEST Maharashtra India
(33) Name of priority country	:NA	(72)**Name of Inventor :**
(86) International Application No	:NA	**1)AMIT KUMAR JAIN**
Filing Date	:NA	
(87) International Publication No	: NA	
(61) Patent of Addition to Application Number	:NA	
Filing Date	:NA	
(62) Divisional to Application Number	:NA	
Filing Date	:NA	

(57) Abstract :
The present invention is a method to facilitate acquiring and providing employment using videos in electronic devices .The method involves creation of at least one user account by a user wherein said user account is associated with a service and said user uses said user account to act as a potential employee and/or a potential employer; providing a Graphical User Interface(GUI) using which said user uses said service; integrating said user into a social computing based community comprising a plurality of users ; creation of at least one set of contacts by said user; using ,curating, processing and presenting said users related data and actions using said at least one user account; using biometric authentication to authenticate access and use of said at least one user account; creation of at least one video by a potential employee for conveying said potential employees information comprising academic information, professional information ,social information, personal information and achievements ; uploading and sharing said at least one video over said social computing based community so that they can be viewed by other users wherein said other users comprises a potential employer ; sending an employment offer from said potential employer to said potential employee ; acquiring an acceptance of said employment offer from said potential employee using said service ; acquiring a confirmation of completion of a job associated with said employment offeT from said potential employee using said service; acquiring a confirmation of completion of said job from said potential employer using said service ; acquiring a rating of satisfaction from said potential employer about said potential employees performance associated with said job using said service; acquiring a rating of satisfaction from said potential employee about said potential employees experience in working with said potential employer using said service; using said rating of satisfaction from said potential employer about said potential employees performance for rating said potential employee; using said rating of satisfaction from said potential employee about said potential employees experience in working with said potential employer for rating said potential employer; creation and/or uploading and sharing of at least one video over said social computing based community by said potential employee for demonstration of said potential employees testimonials from employers who had availed said potential employees services in the past, using said potential employees user account; creation and/or uploading and sharing at least one video (called pitches) over said social computing based community by said potential employee to convey said potential employees unique qualitative assets for employability, using said users potential employees user account; creation and/or uploading and sharing at least one video (called calls) over said social computing based community by said potential employer to convey said potential employers requirement for potential employees required for an associated job, using said user potential employers user account; using a geo-location parameter for associating said potential employees geographic location information to categorize said potential employees availability for a particular job and providing said geographic location information on said potential employees.

No. of Pages : 38 No. of Claims : 16

(12) PATENT APPLICATION PUBLICATION
(19) INDIA
(22) Date of filing of Application :16/04/2013
(21) Application No.1432/MUM/2013 A
(43) Publication Date : 17/04/2015

(54) Title of the invention : CHARGING AN ENERGY STORAGE DEVICE WITH A VARIABLE SPEED GENERATOR

(51) International classification	:G06F1/26, H02J7/00
(31) Priority Document No	:13/448,729
(32) Priority Date	:17/04/2012
(33) Name of priority country	:U.S.A.
(86) International Application No	:NA
Filing Date	:NA
(87) International Publication No	: NA
(61) Patent of Addition to Application Number	:NA
Filing Date	:NA
(62) Divisional to Application Number	:NA
Filing Date	:NA

(71)**Name of Applicant :**
1)KOHLER CO.
Address of Applicant :444 HIGHLAND DRIVE, KOHLER, WI 53044, U.S.A.
(72)**Name of Inventor :**
1)ALBSMEIER, ERIC D.
2)MAUK, RICHARD A.
3)FRAMPTON, ISAAC S.
4)CHIU, HARRISON C.

(57) Abstract :
Some embodiments relate to a power management system. The power management system includes a variable speed generator that provides a voltage output to a bus that is adapted to be connected to a load and an energy storage device. The power management system further includes a generator controller that controls the speed of the variable speed generator and monitors a charge level of the energy storage device. The generator controller also remotely displays information relating to the charge level of the energy storage device by supplying information relating to operation of the power management system over a network. The generator controller may remotely display information relating to the charge level of the energy storage device by supplying information relating to operation of the power management system over the Internet. The generator controller may also start/stop the variable speed generator based on the charge level of the energy storage device.

No. of Pages : 17 No. of Claims : 31

(12) PATENT APPLICATION PUBLICATION
(19) INDIA
(22) Date of filing of Application :24/07/2014

(21) Application No.1494/MUMNP/2014 A
(43) Publication Date : 17/04/2015

(54) Title of the invention : A MOUNTING DEVICE FOR MOUNTING AN OBJECT TO A VEHICLE

(51) International classification :B62D33/023,B60P7/08,B60R9/06
(31) Priority Document No :2012900265
(32) Priority Date :24/01/2012
(33) Name of priority country :Australia
(86) International Application No :PCT/AU2013/000048
Filing Date :24/01/2013
(87) International Publication No :WO 2013/110123
(61) Patent of Addition to Application Number :NA
Filing Date :NA
(62) Divisional to Application Number :NA
Filing Date :NA

(71)**Name of Applicant :**
1)PORTESIDE PTY LTD
Address of Applicant :17 Gumina Place Munster Western Australia 6166 Australia
(72)**Name of Inventor :**
1)MCCAUGHAN Robert Archibald

(57) Abstract :
The present disclosure provides a mounting device for mounting an object to a vehicle. The vehicle has a tailgate and the mounting device comprises a mount for mounting the object to the mounting device. The mount comprises a rigid member on which the in use the object is mounted. Further the mounting device comprises a coupling for coupling the mount to the tailgate of the vehicle. The coupling is arranged for removably coupling to the tailgate of the vehicle without requiring a structural modification of the tailgate.

No. of Pages : 30 No. of Claims : 37

(12) PATENT APPLICATION PUBLICATION
(19) INDIA
(22) Date of filing of Application :23/04/2013
(21) Application No.1495/MUM/2013 A
(43) Publication Date : 17/04/2015

(54) Title of the invention : SYSTEM AND METHOD FOR CREATING VARIANTS IN A TEST DATABASE DURING VARIOUS TEST STAGES

(51) International classification	:G06F11/00, G06F19/00
(31) Priority Document No	:NA
(32) Priority Date	:NA
(33) Name of priority country	:NA
(86) International Application No	:NA
Filing Date	:NA
(87) International Publication No	: NA
(61) Patent of Addition to Application Number	:NA
Filing Date	:NA
(62) Divisional to Application Number	:NA
Filing Date	:NA

(71)**Name of Applicant :**
1)TATA CONSULTANCY SERVICES LIMITED
Address of Applicant :NIRMAL BUILDING, 9TH FLOOR, NARIMAN POINT, MUMBAI 400021, MAHARASHTRA, INDIA
(72)**Name of Inventor :**
1)PATWARDHAN, NIKHIL GIRISH
2)ROY, ASHIM
3)KULKARNI, RUPALI KEDAR

(57) Abstract :
The present invention provides a system and method for creating one or more variants of test data during various test stages is disclosed. The system and method facilitates a user to create a primary variant for test data and to store the primary variant of the test data in a test data variant repository. Any changes performed in the test database by the user are identified by using a tracking mechanism to store one or more new variant along with a variant number with respect to the changes performed in the test database in response to the users request. The primary variant and the new variants are accessed by the user to perform a comparative analysis and to modify the test data at any test stage.

No. of Pages : 28 No. of Claims : 18

(12) PATENT APPLICATION PUBLICATION
(19) INDIA
(22) Date of filing of Application :24/07/2014
(21) Application No.1495/MUMNP/2014 A
(43) Publication Date : 17/04/2015

(54) Title of the invention : CALMANGAFODIPIR A NEW CHEMICAL ENTITY AND OTHER MIXED METAL COMPLEXES METHODS OF PREPARATION COMPOSITIONS AND METHODS OF TREATMENT

(51) International classification :C07F19/00,A61K33/32,A61P35/00
(31) Priority Document No :61/583,377
(32) Priority Date :05/01/2012
(33) Name of priority country :U.S.A.
(86) International Application No :PCT/IB2012/056959
Filing Date :04/12/2012
(87) International Publication No :WO 2013/102806
(61) Patent of Addition to Application Number :NA
Filing Date :NA
(62) Divisional to Application Number :NA
Filing Date :NA

(71)**Name of Applicant :**
1)PLEDPHARMA AB
Address of Applicant :Grev Turegatan 11C 3rd Floor S 114 46 Stockholm Sweden
(72)**Name of Inventor :**
1)KARLSSON Jan Olof
2)REINEKE Karl
3)KURZ Tino
4)ANDERSSON Rolf
5)HALL Michael
6)MCLAUGHLIN Christina
7)JACOBSSON Sven
8)N„SSTR–M Jacques

(57) Abstract :
A mixed metal complex of a compound of Formula I or a salt thereof wherein the mixed metals comprise a Group III XII transition metal and a Group II metal: (Formula I) (I) wherein X R R R and R are as defined herein is produced in a one step crystallization from a solution of the Group III XII transition metal the Group II metal and a compound of Formula I. Methods for treatment of a pathological condition in a patient for example a pathological condition caused by the presence of oxygen derived free radicals comprises administering the mixed metal complex to the patient.

No. of Pages : 76 No. of Claims : 31

(12) PATENT APPLICATION PUBLICATION
(19) INDIA
(22) Date of filing of Application :23/04/2013
(21) Application No.1491/MUM/2013 A
(43) Publication Date : 17/04/2015

(54) Title of the invention : METHOD AND DEVICE FOR IDENTIFYING AN AIRPLANE IN CONNECTION WITH PARKING OF THE AIRPLANE AT A STAND

(51) International classification :G06F17/00
(31) Priority Document No :1250431-2
(32) Priority Date :30/04/2012
(33) Name of priority country :Sweden
(86) International Application No :NA
Filing Date :NA
(87) International Publication No : NA
(61) Patent of Addition to Application Number :NA
Filing Date :NA
(62) Divisional to Application Number :NA
Filing Date :NA

(71)**Name of Applicant :**
1)FMT INTERNATIONAL TRADE AB
Address of Applicant :DALASLINGAN 8 231 32 TRELLEBORG, SWEDEN
(72)**Name of Inventor :**
1)PER THELANDER

(57) Abstract :
Method for identifying an airplane and indicate airplane type and version in connection to parking of the airplane at a gate or a stand, for possible connection of a passenger bridge (1) or a loading bridge to a door of an airplane, where the airplane (5) is positioned and stopped at a predetermined position using a touchless measurement of the distance between the airplane and a fixed point, where the distance is indicated on a display (6) mounted in front of the pilot of the airplane on for instance an airport building (7), which display (6) is caused to show to the pilot the position of the airplane (5) in relation to a stop point for the airplane and to show the current airplane type and version, where the said distance measurement and display are caused to be activated by a computer system (20), belonging to the airport, or manually, and wherein an antenna (16) is caused to receive information transmitted by an airplane (5). The invention is characterized in that the information signal (17) which is transmitted by the airplane (5) is caused to be received by a directed antenna (16) which is positioned in connection to said display (6) and directed towards the stand at which an airplane is expected to arrive, in that the antenna (16) is connected to the control system (18) of the docking system, in that at least the identification number of the airplane is extracted from the said information (17), in that information regarding airplane type and version in question for a certain identification number is obtained from a database (14), in which identifications numbers of the airplanes are stored, and is transferred to the said control system (18) which is caused to control the said display (6) at the stand at which an airplane with a read identification number is to park and, on the display, indicate airplane type and version.

No. of Pages : 19 No. of Claims : 12

(12) PATENT APPLICATION PUBLICATION
(19) INDIA
(22) Date of filing of Application :23/04/2013
(21) Application No.1492/MUM/2013 A
(43) Publication Date : 17/04/2015

(54) Title of the invention : METHOD FOR IDENTIFYING AN AIRPLANE IN CONNECTION WITH PARKING OF THE AIRPLANE AT A STAND

(51) International classification	:G05D1/00, G05D1/02
(31) Priority Document No	:1250430-4
(32) Priority Date	:30/04/2012
(33) Name of priority country	:Sweden
(86) International Application No	:NA
Filing Date	:NA
(87) International Publication No	: NA
(61) Patent of Addition to Application Number	:NA
Filing Date	:NA
(62) Divisional to Application Number	:NA
Filing Date	:NA

(71)**Name of Applicant :**
1)FMT INTERNATIONAL TRADE AB
Address of Applicant :DALASLINGAN 8 231 32 TRELLEBORG, SWEDEN
(72)**Name of Inventor :**
1)PER THELANDER

(57) Abstract :
Method for identifying an airplane in connection to parking of the airplane at a gate or a stand, for possible connection of a passenger bridge (1) or a loading bridge to a door of an airplane, where the airplane is positioned and stopped at a predetermined position using a touchless measurement of the distance between the airplane and a fixed point, where the distance is indicated on a display (6) mounted in front of the pilot of the airplane on for instance an airport building (7), which display (6) is caused to show to the pilot the position of the airplane (5) in relation to a stop point for the airplane and to show the current airplane type, where the said distance measurement and display are caused to be activated by a computer system (20) belonging to the airport or manually, and wherein an antenna (16) is caused to receive information (17) transmitted by an airplane (5). The invention is characterized in that at least the identification number of the airplane and the longitudinal and latitudinal coordinates of the airplane are extracted from said information (17). in that information regarding the airplane type and version in question for a certain identification number is obtained from a database in which the identification numbers of airplanes are stored, which information is transferred to a control system (18) for the said display (6), and in that the control system (18) is caused to control the said display (6) at the stand at which an airplane is to park and, on the display, indicate airplane type and version.

No. of Pages : 15 No. of Claims : 5

(12) PATENT APPLICATION PUBLICATION
(19) INDIA
(22) Date of filing of Application :24/07/2014
(21) Application No.1492/MUMNP/2014 A
(43) Publication Date : 17/04/2015

(54) Title of the invention : SUBSTITUTED PYRANO AND FURANOQUINOLINES THEIR PREPARATION AND USE AS MEDICAMENTS

(51) International classification :C07D491/04,A61K31/436,A61P25/04
(31) Priority Document No :12382020.1
(32) Priority Date :24/01/2012
(33) Name of priority country :EPO
(86) International Application No :PCT/EP2013/051328
Filing Date :24/01/2013
(87) International Publication No :WO 2013/110698
(61) Patent of Addition to Application Number :NA
Filing Date :NA
(62) Divisional to Application Number :NA
Filing Date :NA

(71)**Name of Applicant :**
1)LABORATORIOS DEL DR. ESTEVE S.A.
Address of Applicant :Avda. Mare de Deu de Montserrat 221 E 08041 Barcelona (ES) Spain
(72)**Name of Inventor :**
1)DIAZ FERN NDEZ Jos Luis
2)CHRISTMANN Ute

(57) Abstract :
The present invention relates to new substituted pyrano and furanoquinolines having a great affinity for sigma receptors especially sigma 1 receptors as well as to the process for the preparation thereof to compositions comprising them and to their use as medicaments.

No. of Pages : 111 No. of Claims : 17

(12) PATENT APPLICATION PUBLICATION
(19) INDIA
(22) Date of filing of Application :23/04/2013

(21) Application No.1493/MUM/2013 A
(43) Publication Date : 17/04/2015

(54) Title of the invention : IMAGE SMART

(51) International classification	:G01N 1/30, G01N21/78
(31) Priority Document No	:NA
(32) Priority Date	:NA
(33) Name of priority country	:NA
(86) International Application No	:NA
Filing Date	:NA
(87) International Publication No	: NA
(61) Patent of Addition to Application Number	:NA
Filing Date	:NA
(62) Divisional to Application Number	:NA
Filing Date	:NA

(71)**Name of Applicant :**
1)ADITYA IMAGING INFORMATION TECHNOLOGIES (AIIT)
Address of Applicant :GURUKUL CHS, 145, RAM MANDIR ROAD, VILE PARLE (E), MUMBAI - 400057 Maharashtra India
(72)**Name of Inventor :**
1)SHANGHVI, UMESH

(57) Abstract :
The invention provides a method and system for processing a digital slide image of a stained tissue. The method includes receiving the digital slide image for processing and comparing the digital slide image with a master slide image to determine if the digital slide image is of an acceptable quality. The method includes comparing each parameter of a set of parameters of the digital slide image with a threshold value to determine if the digital slide image is of the acceptable quality. After determining that the digital slide image is of the acceptable quality, the digital slide image is modified. One or more characteristics of the digital slide image are modified based on the comparison of the digital slide image with the master slide image. If the digital slide image is not of the acceptable quality, a cause of error is identified by utilizing root cause analysis information.

No. of Pages : 50 No. of Claims : 14

(12) PATENT APPLICATION PUBLICATION
(19) INDIA
(22) Date of filing of Application :24/07/2014
(21) Application No.1493/MUMNP/2014 A
(43) Publication Date : 17/04/2015

(54) Title of the invention : OLIGONUCLEOTIDES FOR MODULATING GENE EXPRESSION AND USES THEREOF

(51) International classification	:C12N15/113,A61K31/7088,A61K31/713
(31) Priority Document No	:MI2012A000275
(32) Priority Date	:24/02/2012
(33) Name of priority country	:Italy
(86) International Application No Filing Date	:PCT/IB2013/051410 :21/02/2013
(87) International Publication No	:WO 2013/124807
(61) Patent of Addition to Application Number Filing Date	:NA :NA
(62) Divisional to Application Number Filing Date	:NA :NA

(71)**Name of Applicant :**
1)BIOGENERA S.P.A.
Address of Applicant :Via Marconi 46 I 40046 Porretta Terme (Bologna) Italy
(72)**Name of Inventor :**
1)TONELLI Roberto
2)VENTURELLI Leonardo
3)TORTORI Andrea
4)MONTEMURRO Luca

(57) Abstract :
The present invention regards oligonucleotides for modulating the expression of a gene in particular for modulating a gene responsible for a pathology of genetic tumoural or viral origin. Moreover the present invention relates to the use of said oligonucleotides possibly chemically modified for the treatment and/or the diagnosis of said diseases.

No. of Pages : 70 No. of Claims : 30

(12) PATENT APPLICATION PUBLICATION
(19) INDIA
(22) Date of filing of Application :23/04/2013
(21) Application No.1494/MUM/2013 A
(43) Publication Date : 17/04/2015

(54) Title of the invention : A PROCESS FOR MANUFACTURING OF BOEHMITE PARTICULATE MATERIAL

(51) International classification	:C01F7/02, C01F7/44
(31) Priority Document No	:NA
(32) Priority Date	:NA
(33) Name of priority country	:NA
(86) International Application No	:NA
Filing Date	:NA
(87) International Publication No	: NA
(61) Patent of Addition to Application Number	:NA
Filing Date	:NA
(62) Divisional to Application Number	:NA
Filing Date	:NA

(71)**Name of Applicant :**
1)HEUBACH COLOR PVT. LTD.
Address of Applicant :PLOT NO. 9001-9010, PHASE VI, G.I.D.C., ANKLESHWAR - 393002, GUJARAT, INDIA
(72)**Name of Inventor :**
1)SEVAK JASHVANT ISHVARLAL
2)NATU VINAYAK MAHADEO

(57) Abstract :
A process for the preparation of Boehmite particulate material from the waste containing Aluminium chloride. Aluminium sulfate, Aluminium carbide or any other Aluminium salt; said process comprising : a. preparing 2 to 15 wt. % of aqueous slurry of Aluminium hydroxide, said Aluminium hydroxide is recovered from the waste containing Aluminium chloride, Aluminium sulfate, Aluminium carbide or any other Aluminium salt by hydrolyzing the waste with soda ash; b. preparing slurry containing 2 to 10 wt. % of silane and 2 to 10% of silica by making 2 to 10 wt. % of aqueous slurry of silane with stirring followed by adding 2 to 10 wt. % of micro fine precipitated silica powder having average particle size of 3μ and stirring the slurry over night at low speed; c. Mixing slurry obtained in step (a) into step (b) followed by subjecting the reaction mixture to hydrothermal treatment at temperature in the range of 90°C to 250° C for at least 4 hours; and d. collecting Boehmite particulate material by either centrifuging or filter pressing the reaction mixture or any other conventional means followed by drying the product by either spray drying or spin flash drying or any other conventional means and optionally pulverizing to get fine flaky particles with particle size 5 to 8 micron. Boehmite particulate matter having 80 to 84 wt % of Boehmite along with base material as micro fine precipitated silica powder (8 to 10 wt %) treated with silane (8 to 10 wt %) with preferred particles size 5 to 8 microns and a coating comprising thereof.

No. of Pages : 21 No. of Claims : 10

(12) PATENT APPLICATION PUBLICATION
(19) INDIA
(22) Date of filing of Application :17/04/2013
(21) Application No.1443/MUM/2013 A
(43) Publication Date : 17/04/2015

(54) Title of the invention : SYSTEM AND METHOD FOR DATA MANAGEMENT IN AN OPEN SOURCE DISTRIBUTED COMPUTING PLATFORM

(51) International classification	:G06F17/30, G06F12/08
(31) Priority Document No	:NA
(32) Priority Date	:NA
(33) Name of priority country	:NA
(86) International Application No	:NA
Filing Date	:NA
(87) International Publication No	: NA
(61) Patent of Addition to Application Number	:NA
Filing Date	:NA
(62) Divisional to Application Number	:NA
Filing Date	:NA

(71)**Name of Applicant :**
1)TATA CONSULTANCY SERVICES LIMITED
Address of Applicant :NIRMAL BUILDING, 9TH FLOOR, NARIMAN POINT, MUMBAI 400021, MAHARASHTRA, INDIA
(72)**Name of Inventor :**
1)BANDEKAR, BHUSHAN VIDYADHAR
2)GANGWANI, HIRO RAHANDOMAL
3)DANI, JAYANT SUDHAKARRAO

(57) Abstract :
Disclosed is a method and system for data management in an open source distributed computing platform. The system comprises an input module, a data uploading module, an extraction module, an analytical module and a processing module. The input module is constructed to configure one or more parameters to be used for performing one or more operations on one or more document, the parameters are further mapped with the document. The data uploading module selects the document to be uploaded. The extraction module is configured to extract document content by performing a search in the document based on the parameters configured. The analytical module analyzes the document content so extracted by applying one or more logic rules while storing the document content in a distributed file system. The processing module performs operations in a parallel mode on the document content stored in the distributed file system based on the parameters configured.

No. of Pages : 24 No. of Claims : 19

(12) PATENT APPLICATION PUBLICATION
(19) INDIA
(22) Date of filing of Application :25/07/2014
(21) Application No.1504/MUMNP/2014 A
(43) Publication Date : 17/04/2015

(54) Title of the invention : INJECTOR APPARATUS WITH FIXED PLUNGER AND METHOD OF USE

(51) International classification :A61M5/00,A61M5/178,A61M5/46
(31) Priority Document No :61/597,264
(32) Priority Date :10/02/2012
(33) Name of priority country :U.S.A.
(86) International Application No :PCT/US2013/025454
Filing Date :08/02/2013
(87) International Publication No :WO 2013/120033
(61) Patent of Addition to Application Number :NA
Filing Date :NA
(62) Divisional to Application Number :NA
Filing Date :NA

(71)**Name of Applicant :**
1)PSIVIDA US INC.
Address of Applicant :400 Pleasant Street Watertown MA 02472 U.S.A.
(72)**Name of Inventor :**
1)NAZZARO Martin
2)YORK Josh
3)LEBLANC Ron

(57) Abstract :
Disclosed herein is an injector device for delivering an implant the device including a retracting element a cannula needle and a plunger. The device may comprise an latch that when actuated by a user causes the retracting element to move the cannula needle away from the delivery site allowing the plunger to eject the implant into the site. The device may be configured for intraocular drag delivery.

No. of Pages : 17 No. of Claims : 15

(12) PATENT APPLICATION PUBLICATION
(19) INDIA
(22) Date of filing of Application :25/04/2013

(21) Application No.1506/MUM/2013 A
(43) Publication Date : 17/04/2015

(54) Title of the invention : A PAPERLESS HEALTHCARE ECOSYSTEM

(51) International classification	:G06F9/44, G06F3/00
(31) Priority Document No	:NA
(32) Priority Date	:NA
(33) Name of priority country	:NA
(86) International Application No	:NA
Filing Date	:NA
(87) International Publication No	: NA
(61) Patent of Addition to Application Number	:NA
Filing Date	:NA
(62) Divisional to Application Number	:NA
Filing Date	:NA

(71)**Name of Applicant :**
1)GRAMI, MUKESH
Address of Applicant :C-79 AASHIRWAD, 2ND CROSS LANE, LOKHANDWALA COMPLEX, ANDHERI (W), MUMBAI 400 053, MAHARASHTRA, INDIA
(72)**Name of Inventor :**
1)GRAMI, MUKESH

(57) Abstract :
A paperless healthcare ecosystem comprising: (A) at least a doctor portal adapted to provide a user interface and storage mechanism for at least a doctor in order to allow said doctor to take medical history data from a patient in a structured routine format, said doctor portal comprising access to at least two types of files selected from a group of files consisting of at least medical history files and at least doctor files; (i) said at least medical history files being a compilation of patient visits records in a time-stamped and date-stamped manner; (ii) said at least medical history files further comprising at least seven sub-files, which sub-files being selected from a group of sub-files consisting of at least a first sub-file relating to medical problems, at least a second sub-file relating to medications, at least a third sub-file relating to medical and surgical history, at least a fourth sub-file relating to family medical history, at least a fifth sub-file relating to lifestyle, at least a sixth sub-file relating to occupation, diet, exercise, and at least a seventh sub-file relating to contact details of family, friends, and doctors; and (B) at least a patient portal adapted to provide a user interface and storage mechanism for a patient.

No. of Pages : 53 No. of Claims : 45

(12) PATENT APPLICATION PUBLICATION
(19) INDIA
(22) Date of filing of Application :25/04/2013

(21) Application No.1507/MUM/2013 A
(43) Publication Date : 17/04/2015

(54) Title of the invention : AN INSTANTANEOUS MOVIE RATING AND REVIEWING DEVICE, SYSTEM, AND METHOD

(51) International classification	:H04L29/06, H04L29/08
(31) Priority Document No	:NA
(32) Priority Date	:NA
(33) Name of priority country	:NA
(86) International Application No	:NA
Filing Date	:NA
(87) International Publication No	: NA
(61) Patent of Addition to Application Number	:NA
Filing Date	:NA
(62) Divisional to Application Number	:NA
Filing Date	:NA

(71)**Name of Applicant :**
1)CHIRAG TANNA
Address of Applicant :B-72, 62, 73 PEREIRA NAGAR NO. 7, KHOPAT, THANE (W) 400 601, MAHARASHTRA, INDIA
(72)**Name of Inventor :**
1)CHIRAG TANNA

(57) Abstract :
An instantaneous movie rating and reviewing system comprises: at least a numeral based input means adapted to receive a numeral input in relation to rating a movie or its sequence, thereof; at least a recording means adapted to record user inputs, of ratings, from said numeral based input means; and at least a processing means adapted to collate data in relation to ratings for further processing into analysed data.

No. of Pages : 28 No. of Claims : 20

(12) PATENT APPLICATION PUBLICATION
(19) INDIA
(22) Date of filing of Application :21/07/2014
(21) Application No.1457/MUMNP/2014 A
(43) Publication Date : 17/04/2015

(54) Title of the invention : LOW PROFILE CIRCUIT BREAKER

(51) International classification :H01H33/20
(31) Priority Document No :61/587,733
(32) Priority Date :18/01/2012
(33) Name of priority country :U.S.A.
(86) International Application No :PCT/US2013/022078
Filing Date :18/01/2013
(87) International Publication No :WO 2013/109839
(61) Patent of Addition to Application Number :NA
Filing Date :NA
(62) Divisional to Application Number :NA
Filing Date :NA

(71)**Name of Applicant :**
1)CARLING TECHNOLOGIES INC.
Address of Applicant :60 Johnson Ave Plainville CT 06062 1177 U.S.A.
(72)**Name of Inventor :**
1)FASANO Michael
2)LIN Jianzhuan
3)BUGRYN James

(57) Abstract :
A circuit interrupter having a compact design. According to some implementations the circuit interrupter includes a conductor from a terminal to a contact having a portion that is angled with respect to the housing sides. This allows a fastener sleeve used to secure the device housing to be positioned closer to the center of mass of the housing reducing the area of the housing. In some implementations an arc splitter is provided which includes conductive plates that are angled with respect to the housing sides allowing the area of the housing to be reduced. In some implementations a terminal is designed to accommodate a connection without being doubled back reducing the clearance required for the terminal and the overall area of the circuit interrupter.

No. of Pages : 17 No. of Claims : 20

(12) PATENT APPLICATION PUBLICATION
(19) INDIA
(22) Date of filing of Application :21/07/2014
(21) Application No.1458/MUMNP/2014 A
(43) Publication Date : 17/04/2015

(54) Title of the invention : SYSTEMS AND METHODS FOR DESIGNING AND GENERATING DEVICES USING ACCURACY MAPS AND STABILITY ANALYSIS

(51) International classification :A61F2/30
(31) Priority Document No :61/579,927
(32) Priority Date :23/12/2011
(33) Name of priority country :U.S.A.
(86) International Application No :PCT/IB2012/003101
Filing Date :21/12/2012
(87) International Publication No :WO 2013/093645
(61) Patent of Addition to Application Number :NA
Filing Date :NA
(62) Divisional to Application Number :NA
Filing Date :NA

(71)**Name of Applicant :**
1)MATERIALISE NV
Address of Applicant :Technologielaan 15 B 3001 Leuven, Belgium
(72)**Name of Inventor :**
1)WIRX SPEETJENS Roel
2)VAN DEN BROECK Joyce
3)JANSSENS Michel

(57) Abstract :
Systems and methods for designing and generating a device using accuracy maps and stability analysis are disclosed herein. In some aspects the systems and methods described relate to an apparatus for designing a device. The apparatus includes a processor (210) configured to generate a three dimensional model of a physical object (402) and determine whether the three dimensional model satisfies an accuracy threshold based on an accuracy map (404). The processor is further configured generate a simulated representation of the device (406) determine whether the simulated representation of the device satisfies a stability threshold (408) simulate a fit of the device on the three dimensional model if the simulated representation of the device satisfies the stability threshold (410) and determine whether the simulated fit of the device on the three dimensional model is within a tolerance threshold (412). The processor is further configured to generate an approved design of the device if the simulated fit is within the tolerance threshold (414).

No. of Pages : 69 No. of Claims : 30

(12) PATENT APPLICATION PUBLICATION
(19) INDIA
(22) Date of filing of Application :21/07/2014
(21) Application No.1459/MUMNP/2014 A
(43) Publication Date : 17/04/2015

(54) Title of the invention : GLYCOPROTEIN ENRICHED COMPOSITION AS A FOOD AND/OR FEED ADDITIVE AND/OR AS A THERAPEUTIC AGENT

(51) International classification :A23J1/06,A23K1/04,A23K1/18
(31) Priority Document No :11195701.5
(32) Priority Date :23/12/2011
(33) Name of priority country :EPO
(86) International Application No :PCT/EP2012/076382
Filing Date :20/12/2012
(87) International Publication No :WO 2013/092861
(61) Patent of Addition to Application Number :NA
Filing Date :NA
(62) Divisional to Application Number :NA
Filing Date :NA

(71)**Name of Applicant :**
1)FOODIP SARL
Address of Applicant :6 Rue Jean Pierre Brasseur L 1258 Luxembourg (LU)
(72)**Name of Inventor :**
1)DE BUYSER Dirk
2)HEENS Benoit

(57) Abstract :
The present invention relates to glycoprotein enriched compositions and their use in the treatment and/or prevention of diseases more particular gastro intestinal diseases. The present invention further relates to the use of a glycoprotein enriched composition as a food or feed additive.

No. of Pages : 23 No. of Claims : 14

(12) PATENT APPLICATION PUBLICATION
(19) INDIA
(22) Date of filing of Application :25/04/2013
(21) Application No.1520/MUM/2013 A
(43) Publication Date : 17/04/2015

(54) Title of the invention : THERMAL MODEL OPTIMISATION

(51) International classification :H02K7/10
(31) Priority Document No :1207915.8
(32) Priority Date :04/05/2012
(33) Name of priority country :GB
(86) International Application No :NA
Filing Date :NA
(87) International Publication No : NA
(61) Patent of Addition to Application Number :NA
Filing Date :NA
(62) Divisional to Application Number :NA
Filing Date :NA

(71)**Name of Applicant :**
1)CONTROL TECHNIQUES LTD
Address of Applicant :THE GRO, POOL ROAD, NEWTOWN POWYS SY16 3BE, UNITED KINGDOM.
(72)**Name of Inventor :**
1)JAMES GARETH CHRISTOPHER
2)WILLIAMS ROBERT GWYN
3)DOWNES NATHAN

(57) Abstract :
A method for controlling the temperature of a component is disclosed. The component is part of a drive configured to drive an electrical machine via an electrically conductive member. The method comprises determining a value of an attribute of the electrically conductive member; configuring a model to calculate the temperature of the component, the model being configured based on the determined value of the attribute of the electrically conductive member; using the model to calculate the temperature of the component; and if the calculated temperature of the component does not meet a predetermined temperature condition, issuing a command to control the operation of the drive such that the temperature of the component is changed to meet the predetermined temperature condition.

No. of Pages : 28 No. of Claims : 39

(12) PATENT APPLICATION PUBLICATION
(19) INDIA
(22) Date of filing of Application :22/04/2013
(21) Application No.1468/MUM/2013 A
(43) Publication Date : 17/04/2015

(54) Title of the invention : A NOVEL COMPOSITION FOR NONALCOHOLIC FATTY LIVER DISEASE (NAFLD)

(51) International classification	:A61K31/00, A61P 1/16
(31) Priority Document No	:NA
(32) Priority Date	:NA
(33) Name of priority country	:NA
(86) International Application No	:NA
Filing Date	:NA
(87) International Publication No	: NA
(61) Patent of Addition to Application Number	:NA
Filing Date	:NA
(62) Divisional to Application Number	:NA
Filing Date	:NA

(71)**Name of Applicant :**
1)CADILA HEALTHCARE LIMITED
Address of Applicant :ZYDUS TOWER, SATELLITE CROSS ROAD, AHMEDABAD-380 015, GUJARAT, INDIA
(72)**Name of Inventor :**
1)PATEL, PANKAJ
2)HARIPRASAD JANI, RAJENDRAKUMAR

(57) Abstract :
The present invention provides a compound of Formula (I) or pharmaceutical acceptable thereof, wherein R is herein described. In addition, the invention relates to composition comprising effective therapeutic amount of compound of formula (I) and methods of using the compounds for treating or prevention disorder such as nonalcoholic fatty liver disease (NAFLD) including fatty liver (steatosis), nonalcoholic steatohepatitis (NASH), and cirrhosis (advanced scarring of the liver).

No. of Pages : 28 No. of Claims : 26

(12) PATENT APPLICATION PUBLICATION
(19) INDIA
(22) Date of filing of Application :22/04/2013
(21) Application No.1469/MUM/2013 A
(43) Publication Date : 17/04/2015

(54) Title of the invention : METHOD FOR RECOVERY OF ALUMINA FROM ALUMINIUM DROSS

(51) International classification	:C01F 7/00, C22B 21/00
(31) Priority Document No	:NA
(32) Priority Date	:NA
(33) Name of priority country	:NA
(86) International Application No	:NA
Filing Date	:NA
(87) International Publication No	: NA
(61) Patent of Addition to Application Number	:NA
Filing Date	:NA
(62) Divisional to Application Number	:NA
Filing Date	:NA

(71)**Name of Applicant :**
1)ADITYA BIRLA SCIENCE AND TECHNOLOGY COMPANY LIMITED
Address of Applicant :ADITYA BIRLA CENTRE, 2ND FLOOR, C WING, S K AHIRE MARG, WORLI, MUMBAI 400025, MAHARASHTRA, INDIA
(72)**Name of Inventor :**
1)DATTA, AMLAN
2)KAR, JITENDRA KUMAR
3)BARANGULE, RAJNI

(57) Abstract :
A method for recovery of a-alumina from aluminium dross is disclosed. The method comprises of grinding aluminium dross to obtain particles having average particle size in the range of 80-100 micron, leaching aluminium dross with an acid to obtain a leach liquor having precipitated silica, separating the silica from the leach liquor to obtain a liquid phase, treating the liquid phase with an aqueous ammonia at acidic pH to facilitate precipitation of iron hydroxide, separating the iron hydroxide from the liquid phase to obtain an iron free liquid phase, treating the iron free liquid phase with aqueous ammonia at alkaline pH to facilitate precipitation of aluminium hydroxide; separating and calcining the aluminium hydroxide to obtain a-alumina having size in the range of 200-700 nm.

No. of Pages : 14 No. of Claims : 6

(12) PATENT APPLICATION PUBLICATION
(19) INDIA
(22) Date of filing of Application :21/07/2014
(21) Application No.1469/MUMNP/2014 A
(43) Publication Date : 17/04/2015

(54) Title of the invention : 2 (PYRIDIN 2YL) 1 7 DIAZA SPIRO [4.4] NONANE 6 ONE COMPOUND AS VOLTAGE GATED SODIUM CHANNELS MODULATOR

(51) International classification :C07D487/10,A61K31/407,A61P29/00
(31) Priority Document No :61/579,613
(32) Priority Date :22/12/2011
(33) Name of priority country :U.S.A.
(86) International Application No :PCT/GB2012/053233
Filing Date :21/12/2012
(87) International Publication No :WO 2013/093496
(61) Patent of Addition to Application Number :NA
Filing Date :NA
(62) Divisional to Application Number :NA
Filing Date :NA

(71)**Name of Applicant :**
1)CONVERGENCE PHARMACEUTICALS LIMITED
Address of Applicant :90 High Holborn London WC1V 6XX U.K.
(72)**Name of Inventor :**
1)WITTY David R.
2)MACPHERSON David T.
3)GIBLIN Gerard M.P.
4)STANWAY Steven J.

(57) Abstract :
The invention relates to spiro derivative of formula (I) to the use of said derivative in treating diseases and conditions mediated by modulation of voltage gated sodium channels to compositions containing said derivative and processes for its preparation.

No. of Pages : 54 No. of Claims : 11

(12) PATENT APPLICATION PUBLICATION
(19) INDIA
(22) Date of filing of Application :26/04/2013
(21) Application No.1531/MUM/2013 A
(43) Publication Date : 17/04/2015

(54) Title of the invention : CARBAZOLE DIOXAZINE PIGMENTS

(51) International classification	:C09B 67/20, C09D 17/00
(31) Priority Document No	:NA
(32) Priority Date	:NA
(33) Name of priority country	:NA
(86) International Application No	:NA
Filing Date	:NA
(87) International Publication No	: NA
(61) Patent of Addition to Application Number	:NA
Filing Date	:NA
(62) Divisional to Application Number	:NA
Filing Date	:NA

(71)**Name of Applicant :**
1)GHARDA KEKI HORMUSJI
Address of Applicant :GHARDA HOUSE, 48 HILL ROAD, BANDRA (WEST), MUMBAI 400 050, MAHARASHTRA, INDIA
(72)**Name of Inventor :**
1)GHARDA KEKI HORMUSJI

(57) Abstract :
The present disclosure relates to a benzoyl substituted carbazoledioxazine pigment and its preparation. The process involves benzoylation of 3-nitro-N-ethylcarbazole in monochlorobenzene using benzoylchloride and ferric chloride to yield 3-nitro-6-benzoyl-N-ethyl carbazole, which on catalytic hydrogenation and subsequent condensation with chloranil and cyclisation yields benzoyl substituted carbazoledioxazine pigment.

No. of Pages : 23 No. of Claims : 11

(12) PATENT APPLICATION PUBLICATION
(19) INDIA
(22) Date of filing of Application :03/05/2013
(21) Application No.1609/MUM/2013 A
(43) Publication Date : 17/04/2015

(54) Title of the invention : NEW METAL STRIP ATTACH ON BOTTOM OF COOKING POT PRESSURE COOKER ETC. FOR ENERGY POT CONSERVATION & LPG CONSERVATION.

(51) International classification	:A47J 27/08, A47J27/00
(31) Priority Document No	:NA
(32) Priority Date	:NA
(33) Name of priority country	:NA
(86) International Application No	:NA
Filing Date	:NA
(87) International Publication No	: NA
(61) Patent of Addition to Application Number	:NA
Filing Date	:NA
(62) Divisional to Application Number	:NA
Filing Date	:NA

(71)**Name of Applicant :**
1)SANGRAM MOHAN VELHAL
Address of Applicant :R.S.NO 995/2A MOHITE PARK, KOLHAPUR 416012, MAHARASHTRA, INDIA.
(72)**Name of Inventor :**
1)SANGRAM MOHAN VELHAL

(57) Abstract :
New metal strip attachment on bottom of Cooking Pot, Fry Pans, Pressure Cooker, and Deep Pan for energy conservation of L.P.G Gas cooking fuel etc. at cooking time. FIELD and use of this our invention in cooking food in Kitchen Ware for enerty conservation. In this invention we attach and fixed one metal strip on bottom and border of cooking pot, fry pan, pressure cooker and deep pans etc. By using this invention fuel heat and flame collect, catch, hold, under the cooking pots. By scientific reason heat and fuel flame goes upper side of the pot. So this pot attachment metal strip control on wastage of heat energy scientifically. So this heat and flame did not overflow by metal strip. So all heat absorbed by cooking pot. So we conservation 10 to 30% of fuel energy

No. of Pages : 6 No. of Claims : 4

(12) PATENT APPLICATION PUBLICATION
(19) INDIA
(22) Date of filing of Application :03/04/2013
(21) Application No.1302/MUM/2013 A
(43) Publication Date : 17/04/2015

(54) Title of the invention : CONTROL DEVICE COMPRISING A MOVABLE UPPER PANEL FOR ACTUATING A SWITCHING BREAKER

(51) International classification	:G06F3/03, G06F3/0354, H01H3/12	(71)**Name of Applicant :** **1)COACTIVE TECHNOLOGIES, LLC.** Address of Applicant :15 RIVERDALE AVENUE NEWTON, MA 04850, U.S.A.
(31) Priority Document No	:1253129	
(32) Priority Date	:05/04/2012	(72)**Name of Inventor :** **1)VILLAIN JEAN-CHRISTOPHE**
(33) Name of priority country	:France	
(86) International Application No	:NA	
Filing Date	:NA	
(87) International Publication No	: NA	
(61) Patent of Addition to Application Number	:NA	
Filing Date	:NA	
(62) Divisional to Application Number	:NA	
Filing Date	:NA	

(57) Abstract :
The invention proposes a device for the control of an electronic apparatus comprising an upper panel (22) on which a user can exert at least one control action, a lower support armature (26) with respect to which the upper panel is mounted vertically movably, a switching breaker (S) which is able to be triggered by the upper panel (21), and an articulated structure to hold the upper panel (21) characterized in that the axis (AS) of actuation of the switching breaker (S) is arranged at the periphery of the contour (27) of the upper panel; and the articulated structure comprises several consecutive shafts (LA, LB, LC, LD) each of which is arranged along an associated edge of the contour (27) of the upper actuation face of the upper panel.

No. of Pages : 55 No. of Claims : 8

(12) PATENT APPLICATION PUBLICATION
(19) INDIA
(22) Date of filing of Application :16/04/2013
(21) Application No.1422/MUM/2013 A
(43) Publication Date : 17/04/2015

(54) Title of the invention : SEALING ELEMENT

(51) International classification	:B65D 53/00
(31) Priority Document No	:1207996.8
(32) Priority Date	:04/05/2012
(33) Name of priority country	:GB
(86) International Application No	:NA
Filing Date	:NA
(87) International Publication No	: NA
(61) Patent of Addition to Application Number	:NA
Filing Date	:NA
(62) Divisional to Application Number	:NA
Filing Date	:NA

(71)**Name of Applicant :**
1)CONTROL TECHNIQUES LTD
Address of Applicant :THE GRO, POOL ROAD, NEWTOWN POWYS, SY16 3BE, UNITED KINGDOM.
(72)**Name of Inventor :**
1)CACHIA CHARLES ANTHONY

(57) Abstract :
A sealing element (1) comprising, in cross-section, a body (7a) and a first sealing part (8a).The first sealing part (8a) providing a sealing face (12a), the first sealing part being connected to and angularly and resiliently displaceable relative to a first surface of the body (7a).

No. of Pages : 21 No. of Claims : 23

(12) PATENT APPLICATION PUBLICATION
(19) INDIA
(22) Date of filing of Application :16/04/2013

(21) Application No.1423/MUM/2013 A
(43) Publication Date : 17/04/2015

(54) Title of the invention : FAN GUARD

(51) International classification	:F24F 1/56, F24F5/00
(31) Priority Document No	:1207674.1
(32) Priority Date	:30/04/2012
(33) Name of priority country	:GB
(86) International Application No	:NA
Filing Date	:NA
(87) International Publication No	: NA
(61) Patent of Addition to Application Number	:NA
Filing Date	:NA
(62) Divisional to Application Number	:NA
Filing Date	:NA

(71)**Name of Applicant :**
1)CONTROL TECHNIQUES LTD
Address of Applicant :THE GRO, POOL ROAD, NEWTOWN POWYS, SY16 3BE, UNITED KINGDOM
(72)**Name of Inventor :**
1)CACHIA CHARLES ANTHONY

(57) Abstract :
There is provided a fan guard for mounting on an electrically-operated axial-flow fan. The fan guard comprises a plurality of fasteners for extending into a plurality of respective holes on the fan and further comprises a projection projecting outwardly from the fan guard from a central support which, in use, is coincident with a central region of the air flow from the axial-flow fan. The fasteners secure the fan guard on the fan by a friction fit between the fasteners and the holes, thereby rendering installation of the fan guard on a fan, and removal of the fan guard from the fan quick and straightforward.

No. of Pages : 19 No. of Claims : 15

(12) PATENT APPLICATION PUBLICATION
(19) INDIA
(22) Date of filing of Application :26/12/2013
(21) Application No.2451/MUMNP/2013 A
(43) Publication Date : 17/04/2015

(54) Title of the invention : METHOD FOR DETECTING AND QUANTIFYING A TARGET MOLECULE IN A TISSUE

(51) International classification :G01N1/28,G01N33/68
(31) Priority Document No :1154731
(32) Priority Date :31/05/2011
(33) Name of priority country :France
(86) International Application No :PCT/FR2012/051205
Filing Date :29/05/2012
(87) International Publication No :WO 2012/164221
(61) Patent of Addition to Application Number :NA
Filing Date :NA
(62) Divisional to Application Number :NA
Filing Date :NA

(71)**Name of Applicant :**
1)IMABIOTECH
Address of Applicant :Cit Scientifique Btiment SN3 F 59655 Villeneuve dAscq France France
(72)**Name of Inventor :**
1)STAUBER Jonathan
2)BONNEL David

(57) Abstract :
The invention relates to a method for preparing a range of dilutions of at least one standard molecule for a tissue according to which use is made of a ground tissue to which the standard molecule is added the whole being conditioned and fractionated before the analysis of a fraction of said tissue. The invention also relates to a method for detecting and quantifying at least one target molecule in at least one tissue using a standard range according to the invention.

No. of Pages : 37 No. of Claims : 21

(12) PATENT APPLICATION PUBLICATION
(19) INDIA
(22) Date of filing of Application :14/03/2014
(21) Application No.457/MUMNP/2014 A
(43) Publication Date : 17/04/2015

(54) Title of the invention : ENHANCED ACCESS CONTROL IN LTE ADVANCED SYSTEMS

(51) International classification :H04W48/10
(31) Priority Document No :61/524118
(32) Priority Date :16/08/2011
(33) Name of priority country :U.S.A.
(86) International Application No :PCT/CN2012/080211
Filing Date :16/08/2012
(87) International Publication No :WO 2013/023608
(61) Patent of Addition to Application Number :NA
Filing Date :NA
(62) Divisional to Application Number :NA
Filing Date :NA

(71)**Name of Applicant :**
1)MEDIATEK INC.
Address of Applicant :No. 1 Dusing Rd. 1st Science Based Industrial Park Hsin Chu Taiwan 300 China
(72)**Name of Inventor :**
1)HSU Chia Chun

(57) Abstract :
An enhanced access control method is proposed for machine type communications (MTC) in a 3GPP LTE Advanced network. An MTC device is configured for enhanced access barring (EAB). When the MTC device attempts access to the network the NAS layer checks whether EAB is applicable for the MTC device. If yes then the NAS layer forwards EAB configuration to the AS layer for further EAB control. Based on the EAB configuration a base station broadcasts EAB information to UEs via system information block. The EAB information indicates whether barring is applied to a number of EAB categories and a number of access classes. Based on the EAB information the MTC devices performs EAB for access attempt to RRC. If access is not barred under EAB then the MTC device further performs ACB for access attempt to RRC.

No. of Pages : 19 No. of Claims : 22

(12) PATENT APPLICATION PUBLICATION
(19) INDIA
(22) Date of filing of Application :28/03/2013
(21) Application No.1172/MUM/2013 A
(43) Publication Date : 17/04/2015

(54) Title of the invention : PROJECTOR SCREEN FOR PREVENTING PIRACY

(51) International classification	:G03B21/00, G03B21/60, G03B29/00
(31) Priority Document No	:NA
(32) Priority Date	:NA
(33) Name of priority country	:NA
(86) International Application No	:NA
Filing Date	:NA
(87) International Publication No	: NA
(61) Patent of Addition to Application Number	:NA
Filing Date	:NA
(62) Divisional to Application Number	:NA
Filing Date	:NA

(71)**Name of Applicant :**
1)DR. PUROHIT VISWAS
Address of Applicant :ADITYA , 130/12, RAM-INDU PARK, BANER-MHALUNGE ROAD, PUNE-411045, MAHARASHTRA, INDIA
(72)**Name of Inventor :**
1)DR. PUROHIT VISWAS

(57) Abstract :
In accordance with one aspect of the present disclosure, a projector screen for preventing video/image piracy is disclosed. The projector screen includes a front layer of projector screen, a rear layer of projector screen and at least one infrared emitting array. The at least one infrared emitting array is disposed between the front layer of projector screen and the rear layer of the projector screen.

No. of Pages : 26 No. of Claims : 13

(12) PATENT APPLICATION PUBLICATION
(19) INDIA
(22) Date of filing of Application :02/04/2013

(21) Application No.1288/MUM/2013 A
(43) Publication Date : 17/04/2015

(54) Title of the invention : METHOD OF MANUFACTURING PHOTOELECTRIC DEVICE

(51) International classification	:H01L21/00, H01L31/18
(31) Priority Document No	:61/620,376
(32) Priority Date	:04/04/2012
(33) Name of priority country	:U.S.A.
(86) International Application No	:NA
Filing Date	:NA
(87) International Publication No	: NA
(61) Patent of Addition to Application Number	:NA
Filing Date	:NA
(62) Divisional to Application Number	:NA
Filing Date	:NA

(71)**Name of Applicant :**
1)SAMSUNG SDI CO., LTD.
Address of Applicant :428-5, Gongse-dong, Giheung-gu, Yongin-si, Gyeonggi-do, Republic of Korea
(72)**Name of Inventor :**
1)Young-Jin Kim
2)Doo-Youl Lee
3)Young-Su Kim
4)Chan-Bin Mo
5)Young-Sang Park
6)Jae-Ho Shin
7)Sang-Jin Park
8)Sang-Won Seo
9)Min-Chul Song
10)Dong-Seop Kim

(57) Abstract :
A method of manufacturing a photoelectric device, the method including: forming a first semiconductor layer on a semiconductor substrate through a first ion implantation; forming a second semiconductor layer having an inverted conductive type on a part of the first semiconductor layer through a second ion implantation; and performing thermal processing to restore lattice damage of the semiconductor substrate and activate a dopant into which ion implanted. According to one or more embodiments of the present invention, a photoelectric device having a reduction in the number of processes for manufacturing the photoelectric device and improved output characteristics is provided.

No. of Pages : 59 No. of Claims : 21

(12) PATENT APPLICATION PUBLICATION
(19) INDIA
(22) Date of filing of Application :10/04/2013
(21) Application No.1347/MUM/2013 A
(43) Publication Date : 17/04/2015

(54) Title of the invention : DRY FOOD WASTE DISPOSAL SYSTEM

(51) International classification :B02C19/00, B02C 23/36
(31) Priority Document No :61/641347
(32) Priority Date :02/05/2012
(33) Name of priority country :U.S.A.
(86) International Application No :NA
Filing Date :NA
(87) International Publication No : NA
(61) Patent of Addition to Application Number :NA
Filing Date :NA
(62) Divisional to Application Number :NA
Filing Date :NA

(71)**Name of Applicant :**
1)EMERSON ELECTRIC CO.
Address of Applicant :8000 WEST FLORISSANT AVENUE ST. LOUIS, MISSOURI 63136, USA
(72)**Name of Inventor :**
1)CHESACK GREGORY J.
2)MCMAHON JEFFREY

(57) Abstract :
A dry food waste disposal system has a food waste disposer having a grind and discharge section having a grind mechanism having a stationary grind ring and a rotatable shredder plate rotated by a motor. The dry food waste disposal system also includes a storage tank that includes a sensor that senses how full the storage tank is, a discharge line coupling a discharge outlet of the food waste disposer to the storage tank, and a controller that disables the food waste disposer off in response to the sensor sensing that the storage tank is full.

No. of Pages : 17 No. of Claims : 10

(12) PATENT APPLICATION PUBLICATION
(19) INDIA
(22) Date of filing of Application :10/04/2013
(21) Application No.1348/MUM/2013 A
(43) Publication Date : 17/04/2015

(54) Title of the invention : AN INTERCHANGEABLE LIQUID AND VAPOUR PHASE REACTOR.

(51) International classification	:B01J8/04, B01J8/28
(31) Priority Document No	:NA
(32) Priority Date	:NA
(33) Name of priority country	:NA
(86) International Application No	:NA
Filing Date	:NA
(87) International Publication No	: NA
(61) Patent of Addition to Application Number	:NA
Filing Date	:NA
(62) Divisional to Application Number	:NA
Filing Date	:NA

(71)**Name of Applicant :**
1)AMAR EQUIPMENTS PVT. LTD.
Address of Applicant :6, PARMAR INDUSTRIAL ESTATE, BAIL BAZAAR, KALE MARG, KURLA (W), MUMBAI 400 070, MAHARASHTRA, INDIA
(72)**Name of Inventor :**
1)MALSHE VINOD CHINTAMANI

(57) Abstract :
An interchangeable liquid and vapour phase reactor comprises: at least a reaction vessel with a lid, said reaction being in liquid phase configuration or in vapour phase configuration depending upon the configuration of said reactor, said lid further comprising a plurality of securing means allowing a plurality of components which form a part of said reactor removed or attached within said reaction vessel; at least a modular stirring shaft with a detachable impeller, said impeller being chosen from a group of impellers consisting of liquid phase impellers and vapour phase impellers depending upon the configuration of said reactor; and at least an outlet valve on the underside of said reaction vessel.

No. of Pages : 23 No. of Claims : 14

(12) PATENT APPLICATION PUBLICATION
(19) INDIA
(22) Date of filing of Application :30/04/2014
(21) Application No.820/MUMNP/2014 A
(43) Publication Date : 17/04/2015

(54) Title of the invention : TOOL FOR PIERCING MILL

(51) International classification :B21B25/04,B21B25/00,C21D9/00
(31) Priority Document No :2011-261307
(32) Priority Date :30/11/2011
(33) Name of priority country :Japan
(86) International Application No :PCT/JP2012/007617
Filing Date :28/11/2012
(87) International Publication No :WO 2013/080528
(61) Patent of Addition to Application Number :NA
Filing Date :NA
(62) Divisional to Application Number :NA
Filing Date :NA

(71)**Name of Applicant :**
1)JFE STEEL CORPORATION
Address of Applicant :2 3 Uchisaiwai cho 2 chome Chiyoda ku Tokyo 1000011 Japan
(72)**Name of Inventor :**
1)ICHINO Kenji
2)OZAKI Seiji
3)MOCHIDA Tetsuo

(57) Abstract :
A tool for a piercing mill with excellent wear resistance and a method for producing the tool for a piercing mill are provided. A scale layer is formed in a surface layer of a substrate steel having a composition containing, on a mass% basis, C: 0.05% to 0.5%, Si: 0.1% to 1.5%, Mn: 0.1% to 1.5%, Cr: 0.1% to 1.5%, Mo: 0.6% to 3.5%, W: 0.5% to 3.5%, and Nb: 0.1% to 1.0% and further containing Co: 0.5% to 3.5% and Ni: 0.5% to 4.0% so as to satisfy 1.0 < Ni + Co < 4.0. The scale layer includes a net structure scale layer that is formed on a substrate steel side, has a thickness of 10 to 200 μm in a depth direction, and is complicatedly intertwined with a metal. A microstructure on the substrate steel side in a range of at least 300 urn in the depth direction from an interface between the net structure scale layer and the substrate steel contains a ferrite phase at an area fraction of 50% or more, the ferrite phase containing 400 /mm2 or more of ferrite grains having a maximum length of 1 to 60 μm. Such a microstructure can be formed by performing a scale-forming heat treatment in which, after heating, cooling to at least 700°C is conducted with first rapid cooling and second slow cooling. Thus, the adhesiveness of the scale layer is improved and the lifetime of the tool for a piercing mill is increased.

No. of Pages : 41 No. of Claims : 2

(12) PATENT APPLICATION PUBLICATION
(19) INDIA
(22) Date of filing of Application :17/04/2013
(21) Application No.1439/MUM/2013 A
(43) Publication Date : 17/04/2015

(54) Title of the invention : AN ISOSORBIDE CONTAINING POLYESTER POLYMER AND PROCESS FOR PREPARATION THEREOF

(51) International classification	:C08G63/672, C08G63/199
(31) Priority Document No	:NA
(32) Priority Date	:NA
(33) Name of priority country	:NA
(86) International Application No	:NA
Filing Date	:NA
(87) International Publication No	: NA
(61) Patent of Addition to Application Number	:702/MUM/2010
Filed on	:17/03/2010
(62) Divisional to Application Number	:NA
Filing Date	:NA

(71)**Name of Applicant :**
1)RELIANCE INDUSTRIES LIMITED
Address of Applicant :3RD FLOOR, MAKER CHAMBER-VI, 222, NARIMAN POINT, MUMBAI - 400021, MAHARASHTRA, INDIA
(72)**Name of Inventor :**
1)AYODHYA, SRINIVASACHARYA, RAMACHARYA
2)LIMAYE, CHETAN, VAJAY
3)SUDAN, PUSHAP
4)JADIMATH, SHIVAMURTHY, PADDAYA
5)PAWASHE, NANDKUMAR, GOPAL
6)BHANGALE, VIKAS, KADU

(57) Abstract :
The present invention relates to. a process for preparing isosorbide containing polyester polymer using antimony and inorganic tin catalyst system, wherein isosorbide is incorporated as a comonomer. The present invention also relates to an isosorbide containing polyester polymer wherein isosorbide is incorporated as a comonomer and process for its preparation using said catalyst system. The invention also relates to a process which results in improved colour and improved polymerization rate (melt / solid-state) having significant importance in end-use applications.

No. of Pages : 15 No. of Claims : 25

(12) PATENT APPLICATION PUBLICATION
(19) INDIA
(22) Date of filing of Application :25/04/2013
(21) Application No.1501/MUM/2013 A
(43) Publication Date : 17/04/2015

(54) Title of the invention : A NOVEL PROCESS OF PREPARING CINACALCET HYDROCHLORIDE

(51) International classification	:C07C45/41, C07C209/84
(31) Priority Document No	:NA
(32) Priority Date	:NA
(33) Name of priority country	:NA
(86) International Application No	:NA
Filing Date	:NA
(87) International Publication No	: NA
(61) Patent of Addition to Application Number	:NA
Filing Date	:NA
(62) Divisional to Application Number	:NA
Filing Date	:NA

(71)**Name of Applicant :**
1)ENALTEC LABS PRIVATE LIMITED
Address of Applicant :17TH FLOOR, KESAR SOLITAIRE, PLOT NO.5, SECTOR-19, SANPADA, NAVI MUMBAI MAHARASHTRA, INDIA. PIN CODE: 400705
(72)**Name of Inventor :**
1)BOBBA VENKATA SIVAKUMAR
2)KODALI ESWARA RAO
3)GIRISH BANSILAL PATEL
4)SANJAY DASHRATH VAIDYA
5)ALOK PRAMOD TRIPATHI

(57) Abstract :
The present invention provides a novel process of preparing cinacalcet hydrochloride.

No. of Pages : 29 No. of Claims : 10

(12) PATENT APPLICATION PUBLICATION
(19) INDIA
(22) Date of filing of Application :24/07/2014
(21) Application No.1501/MUMNP/2014 A
(43) Publication Date : 17/04/2015

(54) Title of the invention : METHOD AND APPARATUS FOR CONTROLLING A FREQUENCY CONVERTER

(51) International classification :H02J3/18,H02J3/38,H02P9/10
(31) Priority Document No :61/583,449
(32) Priority Date :05/01/2012
(33) Name of priority country :U.S.A.
(86) International Application No :PCT/IB2012/002978
Filing Date :17/12/2012
(87) International Publication No :WO 2013/102791
(61) Patent of Addition to Application Number :NA
Filing Date :NA
(62) Divisional to Application Number :NA
Filing Date :NA

(71)**Name of Applicant :**
1)INGETEAM POWER TECHNOLOGY S.A.
Address of Applicant :Parque Tecnol³gico de Bizkaia Edificio 106 2° Planta E 48170 Zamudio (Bizkaia), Spain
(72)**Name of Inventor :**
1)OLEA Eneko
2)RUIZ Josu
3)ELORRIAGA Josu
4)AURTENETXEA Sergio
5)CARCAR Ainhoa
6)GIL Beatriz

(57) Abstract :
An apparatus and method of controlling a frequency converter is provided. First subsynchronous components in the electrical grid are identified using voltage measurements of the electrical grid. The subsynchronous components of the electrical grid are then used to determine set points for damping currents. These damping currents are then added to current set points calculated by power regulation loops to generate total current set points. Thereafter the frequency converter is controlled based on the total current set points.

No. of Pages : 38 No. of Claims : 12

(12) PATENT APPLICATION PUBLICATION
(19) INDIA
(22) Date of filing of Application :24/07/2014
(21) Application No.1502/MUMNP/2014 A
(43) Publication Date : 17/04/2015

(54) Title of the invention : PROCESS FOR THE PREPARATION OF AN AQUEOUS SOLUTION COMPRISING AT LEAST ONE EARTH ALKALI HYDROGEN CARBONATE AND ITS USE

(51) International classification :C02F1/52,C02F1/66,C02F1/68
(31) Priority Document No :12153898.7
(32) Priority Date :03/02/2012
(33) Name of priority country :EPO
(86) International Application No :PCT/EP2013/051884
Filing Date :31/01/2013
(87) International Publication No :WO 2013/113807
(61) Patent of Addition to Application Number :NA
Filing Date :NA
(62) Divisional to Application Number :NA
Filing Date :NA

(71)**Name of Applicant :**
1)OMYA INTERNATIONAL AG
Address of Applicant :Baslerstrasse 42 CH 4665 Oftringen Switzerland
(72)**Name of Inventor :**
1)BURI Matthias
2)RENTSCH Samuel
3)GANE Patrick A. C.
4)BLUM Ren Vinzenz
5)POFFET Martine

(57) Abstract :
The present invention refers to a process for the preparation of an aqueous solution comprising at least one earth alkali hydrogen carbonate and its uses. The process may be carried out in a reactor system comprising a tank (1) equipped with a stirrer (2) at least one filtering device (4) and a grinding device (18).

No. of Pages : 61 No. of Claims : 28

(12) PATENT APPLICATION PUBLICATION
(19) INDIA
(22) Date of filing of Application :30/04/2013
(21) Application No.1573/MUM/2013 A
(43) Publication Date : 17/04/2015

(54) Title of the invention : EFFERVESCENT GRANULES CONTAINING PUNICA GRANATUM FRUIT PEEL FOR ANTIULCER AND ANALGESIC ACTIVITY

(51) International classification	:A23L1/212, A61P11/06
(31) Priority Document No	:NA
(32) Priority Date	:NA
(33) Name of priority country	:NA
(86) International Application No	:NA
Filing Date	:NA
(87) International Publication No	: NA
(61) Patent of Addition to Application Number	:NA
Filing Date	:NA
(62) Divisional to Application Number	:NA
Filing Date	:NA

(71)**Name of Applicant :**
1)TATKE, PRATIMA
Address of Applicant :C.U. SHAH COLLEGE OF PHARMACY, SNDT WOMEN'S UNIVERSITY, JUHU CAMPUS, JUHU ROAD, SANTACRUZ (WEST), MUMBAI - 400 049, MAHARASHTRA, INDIA.
2)MAHAJAN, DEEPALI
3)NAHARWAR, VIKRAM
(72)**Name of Inventor :**
1)TATKE, PRATIMA
2)MAHAJAN, DEEPALI
3)NAHARWAR, VIKRAM

(57) Abstract :
The invention relates to a pharmaceutical composition of effervescent granules comprising an herbal extract derived from Punica granatum fruit peel having anti-ulcer and analgesic activity, prepared by the wet granulation technique.

No. of Pages : 20 No. of Claims : 8

(12) PATENT APPLICATION PUBLICATION
(19) INDIA
(22) Date of filing of Application :05/05/2014
(21) Application No.846/MUMNP/2014 A
(43) Publication Date : 17/04/2015

(54) Title of the invention : PROCESS AND SYSTEM FOR CAPTURING CARBON DIOXIDE FROM A GAS STREAM

(51) International classification :B01D53/62,B01D53/14,B01J19/00
(31) Priority Document No :2011904159
(32) Priority Date :07/10/2011
(33) Name of priority country :Australia
(86) International Application No :PCT/AU2012/001215
Filing Date :05/10/2012
(87) International Publication No :WO 2013/049896
(61) Patent of Addition to Application Number :NA
Filing Date :NA
(62) Divisional to Application Number :NA
Filing Date :NA

(71)**Name of Applicant :**
1)HUNWICK, RICHARD J.
Address of Applicant :59 ABINGDON ROAD, ROSEVILLE NSW 2069,AUSTRALIA
(72)**Name of Inventor :**
1)HUNWICK Richard J.

(57) Abstract :
A process and system are disclosed for capturing carbon dioxide from a gas stream. The process and system comprises a first reactor in which a slurry of a metal silicate is reacted together with an ammonium salt in aqueous solution. The salt is one that does not form a precipitate with the metal silicate. In the first reactor the metal silicate reacts with the solution to produce a slurry of silica in an aqueous solution of a salt of the metal and ammonia. Ammonia gas is drawn off directly from the first reactor and ammonia including the ammonia drawn off from the first reactor is added to the gas stream. The process and system also comprises scrubbing the gas stream including with the added ammonia with an aqueous solution whereby the carbon dioxide and ammonia are absorbed into the solution and ammonium carbonate salt(s) are produced.

No. of Pages : 47 No. of Claims : 48

(12) PATENT APPLICATION PUBLICATION
(19) INDIA
(22) Date of filing of Application :05/07/2014
(21) Application No.1372/MUMNP/2014 A
(43) Publication Date : 17/04/2015

(54) Title of the invention : TENASCIN C AND USE THEREOF IN RHEUMATOID ARTHRITIS

(51) International classification :G01N33/68,G01N33/564
(31) Priority Document No :1121280.0
(32) Priority Date :12/12/2011
(33) Name of priority country :U.K.
(86) International Application No :PCT/GB2012/053104
Filing Date :12/12/2012
(87) International Publication No :WO 2013/088140
(61) Patent of Addition to Application Number :NA
Filing Date :NA
(62) Divisional to Application Number :NA
Filing Date :NA

(71)**Name of Applicant :**
1)ISIS INNOVATION LIMITED
Address of Applicant :Ewert House Ewert Place Summertown Oxford oxfordshire OX2 7SG U.K.
(72)**Name of Inventor :**
1)MIDWOOD Kim Suzanne

(57) Abstract :
The present invention provides a method of determining the rheumatoid arthritis status of a subject or the progression of rheumatoid arthritis or the appropriate treatment for a subject with rheumatoid arthritis comprising the steps of (a) determining the level of tenascin C in a sample from said subject; and (b) comparing the level of tenascin C determined in step (a) with one or more reference values. Preferably the rheumatoid arthritis referred to is erosive rheumatoid arthritis.

No. of Pages : 34 No. of Claims : 29

(12) PATENT APPLICATION PUBLICATION
(19) INDIA
(22) Date of filing of Application :12/04/2013

(21) Application No.1373/MUM/2013 A
(43) Publication Date : 17/04/2015

(54) Title of the invention : A PROCESS FOR PREPARING HIGH MELT STRENGTH POLYOLEFINS

(51) International classification	:C08F 2/00, C08F 8/00
(31) Priority Document No	:NA
(32) Priority Date	:NA
(33) Name of priority country	:NA
(86) International Application No	:NA
Filing Date	:NA
(87) International Publication No	: NA
(61) Patent of Addition to Application Number	:NA
Filing Date	:NA
(62) Divisional to Application Number	:NA
Filing Date	:NA

(71)**Name of Applicant :**
1)RELIANCE INDUSTRIES LIMITED
Address of Applicant :3RD FLOOR, MAKER CHAMBER-IV, 222, NARIMAN POINT, MUMBAI-400021, MAHARASHTRA, INDIA
(72)**Name of Inventor :**
1)SATPATHY UMA SANKAR
2)MATHUR AJIT BEHARI
3)BASARGEKAR RAJEEV SHYAMRAO
4)JASRA RAKSH VIR

(57) Abstract :
In the present disclosure a high melt strength polyolefin by the reactive modification of a linear polyolefin matrix is prepared wherein the reactive modification of the linear polyolefin is accomplished by using a composition comprising a mixture of a modifier and free radical initiators. The modifiers are significantly used in optimal amount and are combined with optimal amounts of free radical initiators to achieve the desired melt strength properties of the polyolefin matrix.

No. of Pages : 41 No. of Claims : 18

(12) PATENT APPLICATION PUBLICATION
(19) INDIA
(22) Date of filing of Application :12/04/2013

(21) Application No.1374/MUM/2013 A
(43) Publication Date : 17/04/2015

(54) Title of the invention : COMPONENT FOR CLAMPING CHOKE TO CHASSIS

(51) International classification	:H01F 27/06, H01F 27/42
(31) Priority Document No	:61/642160
(32) Priority Date	:03/05/2012
(33) Name of priority country	:U.S.A.
(86) International Application No	:NA
Filing Date	:NA
(87) International Publication No	: NA
(61) Patent of Addition to Application Number	:NA
Filing Date	:NA
(62) Divisional to Application Number	:NA
Filing Date	:NA

(71)**Name of Applicant :**
1)CONTROL TECHNIQUES LTD
Address of Applicant :THE GRO, POOL ROAD, NEWTOWN POWYS, SY16 3BE, UNITED KINGDOM.
(72)**Name of Inventor :**
1)WINDSAND TROY ALAN
2)HOLMAN - WHITE JONATHAN ROBERT
3)COLOMBO ARTHUR FRANK
4)CACHIA CHARLES ANTHONY

(57) Abstract :
A clamp for a choke is provided, the clamp comprising a component configured to hold a choke and at least one electrical connector receiving element for receiving one or more electrical connectors of a choke. The clamp is fitted to the choke and then the assembly is fitted into a device, such as a chassis.

No. of Pages : 15 No. of Claims : 14

(12) PATENT APPLICATION PUBLICATION
(19) INDIA
(22) Date of filing of Application :23/04/2013

(21) Application No.1499/MUM/2013 A
(43) Publication Date : 17/04/2015

(54) Title of the invention : INSECT REPELLENT MACHINE

(51) International classification	:A01M1/20, A01M13/00
(31) Priority Document No	:NA
(32) Priority Date	:NA
(33) Name of priority country	:NA
(86) International Application No	:NA
Filing Date	:NA
(87) International Publication No	: NA
(61) Patent of Addition to Application Number	:NA
Filing Date	:NA
(62) Divisional to Application Number	:NA
Filing Date	:NA

(71)**Name of Applicant :**
1)GODREJ CONSUMER PRODUCTS LIMITED
Address of Applicant :Pirojshanagar, Eastern Expresss Highway, Vikhroli, Mumbai 400079, India Maharashtra India
(72)**Name of Inventor :**
1)POTNIS, Pradeep, Gajanan
2)GHUMKAR, Sujit Arun
3)ARIVALAGAN, N.
4)MOREY, Subodh
5)PARULEKAR, Sainath
6)SINGH, Rajivkumar

(57) Abstract :
An insect repellent machine is provided comprising: a front panel means; a back panel means screwably engaged with said front panel means or optionally said back panel means is snap or click fitted to said front panel means providing a housing for a repellent bottle holder means, a heating means, a circuit arrangement for operating said heating means wherein said holder means comprising an adaptor having a lock-in profile with air-vent facilitating evaporation of liquid repellent and avoiding spillage from plug holding the wick of the repellent bottle; and wherein said lock-in profile is adapted to be substantially concentrically inserted into the refill bottle plug with the wick being disposed through the said lock-in profile.

No. of Pages : 18 No. of Claims : 7

(12) PATENT APPLICATION PUBLICATION
(19) INDIA
(22) Date of filing of Application :07/05/2014
(21) Application No.857/MUMNP/2014 A
(43) Publication Date : 17/04/2015

(54) Title of the invention : EVEN DEPOSITION AND LOW RUB OFF EMULSIONS COMPRISING A FILM FORMING RESIN

(51) International classification :A61K8/19,A61K8/31,A61K8/87
(31) Priority Document No :61/561307
(32) Priority Date :18/11/2011
(33) Name of priority country :U.S.A.
(86) International Application No :PCT/EP2012/072894
Filing Date :16/11/2012
(87) International Publication No:WO 2013/072488
(61) Patent of Addition to Application Number :NA
Filing Date :NA
(62) Divisional to Application Number :NA
Filing Date :NA

(71)**Name of Applicant :**
1)UNILEVER PLC
Address of Applicant :Unilever House 100 Victoria Embankment London Greater London EC4Y 0DY U.K.
(72)**Name of Inventor :**
1)SHAH Pravin
2)LOU Anjing

(57) Abstract :
Improved deposition and low rub off compositions are described. The compositions are emulsions with aqueous based film forming resins in the water phase and particle with hydrophobic material in the oil phase of the emulsion. The compositions are low rub off after being topically applied.

No. of Pages : 20 No. of Claims : 12

(12) PATENT APPLICATION PUBLICATION
(19) INDIA
(22) Date of filing of Application :07/05/2014
(21) Application No.858/MUMNP/2014 A
(43) Publication Date : 17/04/2015

(54) Title of the invention : A PROCESS FOR PRODUCING TEA PRODUCT

(51) International classification :A23F3/06,A23F3/08
(31) Priority Document No :3273/MUM/2011
(32) Priority Date :22/11/2011
(33) Name of priority country :India
(86) International Application No :PCT/EP2012/071448
Filing Date :30/10/2012
(87) International Publication No :WO 2013/075912
(61) Patent of Addition to Application Number :NA
Filing Date :NA
(62) Divisional to Application Number :NA
Filing Date :NA

(71)**Name of Applicant :**
1)UNILEVER PLC
Address of Applicant :a company registered in England and Wales Unilever House 100 Victoria Embankment London Greater London EC4Y 0DY U.K
(72)**Name of Inventor :**
1)BASAVARAJU Lokesh
2)GUTTAPADU Sreeramulu
3)PALAGIRI Swathy
4)PENDEM Anjaneyulu
5)PURUSHOTHAMAN Poovizhi Ponnammal

(57) Abstract :
The present invention relates to a process for producing a black tea product with enhanced sensorials. The people who prefer to consume black tea are unable to get a good amount of catechins because in black tea the amount of catechins is significantly less than that of green tea. Therefore there is a need for providing a tea product which has relatively high amount and catechins high amount of theaflavins and high amount of polyphenols made by a process without addition of any exogenous theaflavins and/or catechins and which also has the sensorials of black tea. It is an object of the present invention to provide a process for producing a tea product with a relatively high amount of catechins and theaflavins without the addition of any exogenous theaflavins and/or catechins. The present inventors have surprisingly found that tea products obtained by a process involving a step of anaerobic incubation at specific temperatures and for specific durations provide a tea product with improved sensorials and thereby satisfying one or more of the objects of the invention.

No. of Pages : 30 No. of Claims : 9

(12) PATENT APPLICATION PUBLICATION
(19) INDIA
(22) Date of filing of Application :22/04/2013
(21) Application No.1465/MUM/2013 A
(43) Publication Date : 17/04/2015

(54) Title of the invention : PROCESS FOR THE PREPARATION OF IMIPRAMINE AND ITS HYDROCHLORIDE SALT

(51) International classification	:C07D 223/28
(31) Priority Document No	:NA
(32) Priority Date	:NA
(33) Name of priority country	:NA
(86) International Application No	:NA
Filing Date	:NA
(87) International Publication No	: NA
(61) Patent of Addition to Application Number	:NA
Filing Date	:NA
(62) Divisional to Application Number	:NA
Filing Date	:NA

(71)**Name of Applicant :**
1)HERBERT BROWN PHARMACEUTICAL & RESEARCH LABORATORIES
Address of Applicant :W-256/257/258A, M.I.D.C. PHASE II, SHIVAJI UDYOG NAGAR, DOMBIVALI (E)-421203, DISTRICT- THANE, MAHARASHTRA, INDIA.
(72)**Name of Inventor :**
1)GUND, VITTHAL GENBHAU
2)BANGAL, MUKUND NAMDEO
3)GUNJAL, SUKHDEO SAMPAT

(57) Abstract :
The present invention relates to a process for preparation of highly pure Imipramine of Formula I or its hydrochloride salt. The process comprises of condensing iminodibenzyl with N,N-dimethylaminopropyl chloride in presence of alkali metal hydroxide and N, N-dimethylacetamide in an inert organic solvent; removing insolubles and washing the resultant solution with water to obtain an organic layer; extracting the organic layer with an aqueous hydrochloric acid; separating an aqueous acidic layer and basifying the aqueous acidic layer to pH 9 to 12 with an aqueous alkali metal hydroxide; extracting the basified solution of step d) with an organic solvent selected from an aliphatic hydrocarbon; separating an hydrocarbon layer, charcoalizing and evaporating to yield Imipramine base of Formula I with GC purity of more than 98.5%; optionally, dissolving Imipramine of Formula I in acetone, cooling to 5-10°C, adjusting pH to 3 to 5 with an alcoholic hydrochloride and isolating Imipramine hydrochloride having HPLC purity of more than 99.5%.

No. of Pages : 20 No. of Claims : 10

(12) PATENT APPLICATION PUBLICATION
(19) INDIA
(22) Date of filing of Application :21/07/2014
(21) Application No.1465/MUMNP/2014 A
(43) Publication Date : 17/04/2015

(54) Title of the invention : HETERO BICYCLIC DERIVATIVES AS HCV INHIBITORS

(51) International classification	:C07D401/14,C07D403/14,C07D491/10
(31) Priority Document No	:11195840.1
(32) Priority Date	:28/12/2011
(33) Name of priority country	:EPO
(86) International Application No	:PCT/EP2012/076934
Filing Date	:27/12/2012
(87) International Publication No	:WO 2013/098313
(61) Patent of Addition to Application Number	:NA
Filing Date	:NA
(62) Divisional to Application Number	:NA
Filing Date	:NA

(71)**Name of Applicant :**
1)JANSSEN R&D IRELAND
Address of Applicant :Eastgate Village Eastgate Little Island Co Cork, Ireland.
(72)**Name of Inventor :**
1)VANDYCK Koen
2)VERSCHUEREN Wim Gaston
3)RABOISSON Pierre Jean Marie Bernard

(57) Abstract :
Inhibitors of HCV replication of formula I including stereochemically isomeric forms and salts hydrates solvates thereof wherein R and R have the meaning as defined herein. The present invention also relates to processes for preparing said compounds pharmaceutical compositions containing them and their use alone or in combination with other HCV inhibitors in HCV therapy.

No. of Pages : 77 No. of Claims : 13

(12) PATENT APPLICATION PUBLICATION
(19) INDIA
(22) Date of filing of Application :07/05/2014
(21) Application No.864/MUMNP/2014 A
(43) Publication Date : 17/04/2015

(54) Title of the invention : METHOD FOR BROWSING WEBPAGE PICTURE AND CLIENT DEVICE

(51) International classification :G06F17/00
(31) Priority Document No :201110331362.5
(32) Priority Date :27/10/2011
(33) Name of priority country :China
(86) International Application No :PCT/CN2012/076707
Filing Date :11/06/2012
(87) International Publication No :WO 2013/060144
(61) Patent of Addition to Application Number :NA
Filing Date :NA
(62) Divisional to Application Number :NA
Filing Date :NA

(71)**Name of Applicant :**
1)TENCENT TECHNOLOGY (SHENZHEN) COMPANY LIMITED
Address of Applicant :Room 403 East Block 2 SEG Park Zhenxing Road Futian District Shenzhen Guangdong 518044 China
(72)**Name of Inventor :**
1)XU Fei
2)FAN Yuewei

(57) Abstract :
In the technical field of computer a method for browsing a webpage picture and a client device are disclosed. The method comprises: a client receiving a picture mode the picture mode being triggered by a user when browsing a webpage; acquiring a picture in the webpage to be browsed by the user; and displaying the picture to the user. The client device comprises a receiving module a first acquisition module and a display module. By means of the present invention when a user is only interested in pictures in a webpage the client acquires the pictures in the webpage separately and collectively displays the pictures to the user so that the user browses the picture content in the webpage more directly and conveniently thereby meeting the user requirement for viewing the picture only.

No. of Pages : 29 No. of Claims : 16

(12) PATENT APPLICATION PUBLICATION
(19) INDIA
(22) Date of filing of Application :07/05/2014
(21) Application No.865/MUMNP/2014 A
(43) Publication Date : 17/04/2015

(54) Title of the invention : TERMINAL DEVICE SERVER DEVICE INFORMATION PROCESSING METHOD PROGRAM AND COLLABORATIVE APPLICATION SUPPLY SYSTEM

(51) International classification :H04N7/173,G06F13/00
(31) Priority Document No :2011-248494
(32) Priority Date :14/11/2011
(33) Name of priority country :Japan
(86) International Application No :PCT/JP2012/078824
Filing Date :07/11/2012
(87) International Publication No :WO 2013/073430
(61) Patent of Addition to Application Number :NA
Filing Date :NA
(62) Divisional to Application Number :NA
Filing Date :NA

(71)**Name of Applicant :**
1)SONY CORPORATION
Address of Applicant :1 7 1 Konan Minato ku Tokyo 1080075 Japan
(72)**Name of Inventor :**
1)YAMAGISHI Yasuaki

(57) Abstract :
The present invention pertains to a terminal device a server device an information processing method program and a collaborative application supply system wherein it is possible to launch an application in conjunction with the progress of contents viewed at the home of a user. This terminal device is characterized by being provided with: a database cache unit for acquiring and retaining reference data held in the database of a server device; and a response generation unit for identifying the extraction source contents in a set of signature data which is contained in a second query transmitted from another terminal device within a common network in accordance with said second query by referring to the reference data in the database cache unit and for generating a second response which is to be transmitted to the other terminal device and which at least contains an application identifier representing the application to be launched in conjunction with the identified contents. This terminal device can be applied to a television receiver.

No. of Pages : 74 No. of Claims : 13

(12) PATENT APPLICATION PUBLICATION
(19) INDIA
(22) Date of filing of Application :01/05/2014
(21) Application No.824/MUMNP/2014 A
(43) Publication Date : 17/04/2015

(54) Title of the invention : HYDROPHOBIC GLAZING

(51) International classification :C03C17/42
(31) Priority Document No :1160419
(32) Priority Date :16/11/2011
(33) Name of priority country :France
(86) International Application No :PCT/FR2012/052621
Filing Date :14/11/2012
(87) International Publication No :WO 2013/072622
(61) Patent of Addition to Application Number :NA
Filing Date :NA
(62) Divisional to Application Number :NA
Filing Date :NA

(71)**Name of Applicant :**
1)SAINT GOBAIN GLASS FRANCE
Address of Applicant :18 Avenue dAlsace F COURBEVOIE 92400 France
(72)**Name of Inventor :**
1)THOUMAZET Claire
2)MELCHER Martin
3)HUIGNARD Arnaud
4)LANTE Raphael

(57) Abstract :
The invention relates to a method for manufacturing a hydrophobic glazing comprising the following consecutive steps: (a) formation of a layer of carbon rich silicon oxycarbide (SiOC) at the surface of a substrate made of mineral glass via chemical deposit in the vaporous phase (CVD) on at least one portion of the surface of said substrate whereby said surface is exposed to a flow of reactive gases containing ethylene (CH) silane (SiH) and carbon dioxide (CO) at a temperature between 600°C and 680°C the volume ratio of ethylene to silane (CH:SiH) during step (a) being lesser than or equal to 3.3 (b) formation of a layer of SiO on the layer of silicon oxycarbide deposited in step (a) or (b) formation of a layer of silicon oxycarbide having low carbon content presenting an average C:Si ratio lower than 0.2 (c) annealing and/or shaping of the substrate resulting from step (b) or (b) at a temperature between 580°C and 700°C (d) activation of the layer of silica formed in step (b) or activation of the layer of silicon oxycarbide formed in step (b) via plasma treatment or acid or basic chemical treatment and (e) grafting via covalent bond of a fluorinated hydrophobe. The invention also relates to a hydrophobic glazing preferably a windscreen capable of being obtained by such a method.

No. of Pages : 18 No. of Claims : 11

(12) PATENT APPLICATION PUBLICATION
(19) INDIA
(22) Date of filing of Application :01/05/2014

(21) Application No.825/MUMNP/2014 A
(43) Publication Date : 17/04/2015

(54) Title of the invention : BARRIER LAYER TO SIOC ALKALI METALS

(51) International classification :C03C17/34,C23C16/40
(31) Priority Document No :1160418
(32) Priority Date :16/11/2011
(33) Name of priority country :France
(86) International Application No :PCT/FR2012/052622
Filing Date :14/11/2012
(87) International Publication No :WO 2013/072623
(61) Patent of Addition to Application Number :NA
Filing Date :NA
(62) Divisional to Application Number :NA
Filing Date :NA

(71)**Name of Applicant :**
1)SAINT GOBAIN GLASS FRANCE
Address of Applicant :18 Avenue dAlsace F 93300 Courbevoie France
(72)**Name of Inventor :**
1)THOUMAZET Claire
2)MELCHER Martin
3)HUIGNARD, Arnaud
4)LANTE Raphael

(57) Abstract :
The invention relates to a glazing comprising a transparent glass substrate containing ions of at least one alkali metal, and a transparent layer of silicon oxycarbide (SiOxCy) having total thickness E with (a) a carbon-rich deep area extending from depth P3 to depth P4, where the C:Si atomic ratio is greater than or equal to 0.5, and (b) a superficial area having a low carbon content, extending from depth P1 to depth P2, where the C:Si atomic ratio is lesser than or equal to 0.4, with P1 < P2 < P3 < P4, and (P2-P1) + (P4-P3) < E the distance between Pi and P2 representing between 10 and 70% of total thickness E of the silicon oxycarbide layer and the distance between P3 and P4 representing between 10 and 70% of total thickness E of the silicon oxycarbide layer.

No. of Pages : 17 No. of Claims : 6

(12) PATENT APPLICATION PUBLICATION
(19) INDIA
(22) Date of filing of Application :08/05/2014
(21) Application No.870/MUMNP/2014 A
(43) Publication Date : 17/04/2015

(54) Title of the invention : FLUID CONTAMINATION PREVENTION SYSTEM

(51) International classification :B01D29/11,B01D29/52,B01D36/00
(31) Priority Document No :61/559384
(32) Priority Date :14/11/2011
(33) Name of priority country:U.S.A.
(86) International Application No :PCT/IL2012/050458
Filing Date :14/11/2012
(87) International Publication No :WO 2013/072912
(61) Patent of Addition to Application Number :NA
Filing Date :NA
(62) Divisional to Application Number :NA
Filing Date :NA

(71)**Name of Applicant :**
1)AMIAD WATER SYSTEMS LTD.
Address of Applicant :Kibbutz Amiad 12335 D.N. Upper Galil 1 Israel
(72)**Name of Inventor :**
1)BENTOR Yoram
2)BEN HORIN Raanan

(57) Abstract :
The disclosed subject matter is directed to a fluid treating system comprising a housing configured with at least one fluid inlet port and at least one fluid outlet port with at least one fluid treating chamber disposed between and being in flow communication with said at least one fluid inlet port and at least one fluid outlet port and at least one intermediate chamber disposed between at least one inlet port and at least one of the fluid treating chamber and outlet port. The at least one intermediate chamber is vented to the atmosphere or coupleable to a vacuum source.

No. of Pages : 28 No. of Claims : 20

(12) PATENT APPLICATION PUBLICATION
(19) INDIA
(22) Date of filing of Application :08/05/2014
(21) Application No.871/MUMNP/2014 A
(43) Publication Date : 17/04/2015

(54) Title of the invention : A PROCESS FOR PREPARING A POLYMER PRODUCT HAVING A 2 5 FURANDICARBOXYLATE MOIETY WITHIN THE POLYMER BACKBONE TO BE USED IN BOTTLE FILM OR FIBRE APPLICATIONS

(51) International classification :C08G63/80,C08G63/181
(31) Priority Document No :61/550707
(32) Priority Date :24/10/2011
(33) Name of priority country :U.S.A.
(86) International Application No :PCT/NL2012/050738
Filing Date :24/10/2012
(87) International Publication No :WO 2013/062408
(61) Patent of Addition to Application Number :NA
Filing Date :NA
(62) Divisional to Application Number :NA
Filing Date :NA

(71)**Name of Applicant :**
1)FURANIX TECHNOLOGIES B.V.
Address of Applicant :29 Zekeringstraat NL 1014 BV Amsterdam Netherlands
(72)**Name of Inventor :**
1)SIPOS LASZLO
2)GRUTER Gerardus Johannes Maria
3)KOLSTAD Jeffrey John
4)DAM Matheus Adrianus

(57) Abstract :
The invention relates to a process for preparing a polymer having a 2 5 furandicarboxylate moiety within the polymer backbone and having a number average molecular weight of at least 25 000 comprising a transesterification step a polycondensation step a drying and/or crystallizing step and a step wherein the polymer is subjected to post condensation conditions and to a polyester containing bottle or film or fibre containing woven or non woven object made from melt processing poly(ethylene 2 5 furandicarboxylate) wherein the poly(ethylene 2 5 furandicarboxylate) is obtainable by the process of the invention.

No. of Pages : 30 No. of Claims : 19

(12) PATENT APPLICATION PUBLICATION
(19) INDIA
(22) Date of filing of Application :23/04/2013
(21) Application No.1497/MUM/2013 A
(43) Publication Date : 17/04/2015

(54) Title of the invention : SYSTEM AND METHOD FOR ADJUSTING THE EXERCISE SCHEDULE OF A GENERATOR

(51) International classification	:H02P9/00, H02P 3/00
(31) Priority Document No	:13/455,466
(32) Priority Date	:25/04/2012
(33) Name of priority country	:U.S.A.
(86) International Application No	:NA
Filing Date	:NA
(87) International Publication No	: NA
(61) Patent of Addition to Application Number	:NA
Filing Date	:NA
(62) Divisional to Application Number	:NA
Filing Date	:NA

(71)**Name of Applicant :**
1)KOHLER CO.
Address of Applicant :444 HIGHLAND DRIVE, KOHLER, WI 53044, U.S.A.
(72)**Name of Inventor :**
1)GREENWALD, ERIC
2)SEMBER, ANDREW JOHN
3)CHIU, HARRISON C.
4)PIERRINGER, JAYSON

(57) Abstract :
Some embodiments relate to an example system for adjusting an exercise schedule of a generator. The system includes the generator and a controller that exercises the generator according to the exercise schedule. The controller modifies the exercise schedule based on generator use. In some of the example embodiments described herein, the controller is a generator controller. Other embodiments relate to a method for adjusting an exercise schedule of a generator. The method includes exercising the generator according to the exercise schedule, and modifying the exercise schedule based on generator use.

No. of Pages : 14 No. of Claims : 32

(12) PATENT APPLICATION PUBLICATION
(19) INDIA
(22) Date of filing of Application :24/07/2014

(21) Application No.1497/MUMNP/2014 A
(43) Publication Date : 17/04/2015

(54) Title of the invention : PROCESS TO IMPROVE FEED EFFICIENCY AND CARCASS CHARACTERISTICS OF ANIMALS

(51) International classification	:A61K31/58,A61K31/192,A61K31/185
(31) Priority Document No	:13/385,521
(32) Priority Date	:23/02/2012
(33) Name of priority country	:U.S.A.
(86) International Application No	:PCT/US2013/000048
Filing Date	:21/02/2013
(87) International Publication No	:WO 2013/126149
(61) Patent of Addition to Application Number	:NA
Filing Date	:NA
(62) Divisional to Application Number	:NA
Filing Date	:NA

(71)**Name of Applicant :**
1)CAMPMANY Joan Torrent
Address of Applicant :7269 Bent Bow Trail Chanhassen MN 55317 U.S.A.
(72)**Name of Inventor :**
1)CAMPMANY Joan Torrent

(57) Abstract :
This invention relates to a process to improve the feed efficiency and carcass characteristics of an animal. The process of this invention can be used to decrease the cost of animal diets to improve performance of animals and to improve the percentage of carcass in animals.

No. of Pages : 21 No. of Claims : 33

(12) PATENT APPLICATION PUBLICATION
(19) INDIA
(22) Date of filing of Application :24/07/2014
(21) Application No.1498/MUMNP/2014 A
(43) Publication Date : 17/04/2015

(54) Title of the invention : SYSTEM AND METHOD FOR PREVENTING ABUSE OF EMERGENCY CALLS PLACED USING SMARTPHONE

(51) International classification :H04W4/22,G06Q40/02
(31) Priority Document No :1020120007873
(32) Priority Date :26/01/2012
(33) Name of priority country :Republic of Korea
(86) International Application No :PCT/KR2013/000614
Filing Date :25/01/2013
(87) International Publication No :WO 2013/111992
(61) Patent of Addition to Application Number :NA
Filing Date :NA
(62) Divisional to Application Number :NA
Filing Date :NA

(71)**Name of Applicant :**
1)KIM Han Seok
Address of Applicant :12 Gangdong daero 9 gil Songpa gu Seoul 138 879 Republic of Korea
(72)**Name of Inventor :**
1)KIM Han Seok
2)KIM, Seong Soo

(57) Abstract :
The present invention relates to a system and method for preventing the abuse of emergency calls placed using a smartphone. When emergency information is transmitted to a preset guardian terminal by pressing a plurality of emergency buttons a guardian terminal verifies whether or not there is an emergency and transmits an emergency situation experienced by a smartphone user to a server of an organization and an officer from the organization having the server is sent to the coordinates of the location of the smartphone user which were received from the mobile communication service provider thus enabling an organization such as a police department or a fire department to react to an emergency in the shortest possible amount of time when the smartphone user experiences said emergency. An Internet bank account of the smartphone user is converted to a preset virtual Internet bank account so as to be provided with a virtual Internet banking procedure. A bank account connected to a debit card or check card corresponding to a smartphone identification number is converted to a preset virtual bank account so as to enable an offline banking service thus preventing additional damage to the smartphone user as a result of a cash withdrawal using the smartphone. The credit card information of the smartphone user is registered as information on a lost card thus preventing additional damage to the smartphone user resulting from a payment by a credit card or from a card loan being taken out.

No. of Pages : 44 No. of Claims : 11

(12) PATENT APPLICATION PUBLICATION
(19) INDIA
(22) Date of filing of Application :09/05/2014
(21) Application No.879/MUMNP/2014 A
(43) Publication Date : 17/04/2015

(54) Title of the invention : COMPOSITIONS USEFUL IN TREATING NEPHROPATHY AND METHODS FOR PREPARATION OF SAME

(51) International classification	:A61K31/201,A61K49/04,A61K31/4178
(31) Priority Document No	:61/545834
(32) Priority Date	:11/10/2011
(33) Name of priority country	:U.S.A.
(86) International Application No	:PCT/US2012/059722
Filing Date	:11/10/2012
(87) International Publication No	:WO 2013/055899
(61) Patent of Addition to Application Number	:NA
Filing Date	:NA
(62) Divisional to Application Number	:NA
Filing Date	:NA

(71)**Name of Applicant :**
1)COMPLEXA INC.
Address of Applicant :2425 Sidney Street Pittsburgh PA 15023 U.S.A. U.S.A.
(72)**Name of Inventor :**
1)CUSHING Daniel Joseph

(57) Abstract :
Activated fatty acids pharmaceutical composition compositions including activated fatty acids methods for using activated fatty acids to treat nephropathy and methods for preparing activated fatty acids are provided herein.

No. of Pages : 45 No. of Claims : 44

(12) PATENT APPLICATION PUBLICATION
(19) INDIA
(22) Date of filing of Application :22/04/2013
(21) Application No.3084/MUM/2012 A
(43) Publication Date : 17/04/2015

(54) Title of the invention : STORAGE UNIT WITH SLIDING SUPPORTS FOR FILES OR BOOKS

(51) International classification	:F24F3/16, F25D11/02
(31) Priority Document No	:NA
(32) Priority Date	:NA
(33) Name of priority country	:NA
(86) International Application No	:NA
Filing Date	:NA
(87) International Publication No	: NA
(61) Patent of Addition to Application Number	:NA
Filing Date	:NA
(62) Divisional to Application Number	:NA
Filing Date	:NA

(71)**Name of Applicant :**
1)ONKAR KALPAK ANIL
Address of Applicant :175, BAJAJ NAGAR, NAGPUR 440010 MAHARASHTRA, (INDIA)
(72)**Name of Inventor :**
1)ONKAR KALPAK ANIL

(57) Abstract :
Any office or library has files and books which are normally kept vertically. This facilitates easy removal and placement of them. If these files are not supported they tend to slip and bend. The files and books get damaged at lower side very soon. Present system of keeping L type supports below books has disadvantage that it cannot be shifted easily due to weight on it. This storage unit provides for sliding support on the shelves. They move in a groove and can be easily and frequently adjusted on placement and removal of books and files.

No. of Pages : 13 No. of Claims : 4

(12) PATENT APPLICATION PUBLICATION
(19) INDIA
(22) Date of filing of Application :22/04/2013
(21) Application No.3085/MUM/2012 A
(43) Publication Date : 17/04/2015

(54) Title of the invention : ADJUSTABLE DRAWER SYSTEM WITH ADJUSTABLE PARTITIONS

(51) International classification	:B65D81/02, A47B88/20, A47F5/00
(31) Priority Document No	:NA
(32) Priority Date	:NA
(33) Name of priority country	:NA
(86) International Application No	:NA
Filing Date	:NA
(87) International Publication No	: NA
(61) Patent of Addition to Application Number	:NA
Filing Date	:NA
(62) Divisional to Application Number	:NA
Filing Date	:NA

(71)**Name of Applicant :**
1)ONKAR KALPAK ANIL
Address of Applicant :175, BAJAJ NAGAR, NAGPUR 440010, MAHARASHTRA, (INDIA)
(72)**Name of Inventor :**
1)ONKAR KALPAK ANIL

(57) Abstract :
The drawer system with adjustable partitions providing various sizes of compartments in order to store articles of various length, width and height. The drawers of various heights can also be mounted at various positions on vertical columns and these vertical columns are supported by various depth members and width members. The drawer has partition receiving grooves to accommodate partitions inside the drawer. In order to divide these drawers in width and depth, partitions are first inserted along the full width or full depth of the drawer. After the formation long compartments small partitions are placed in the grooves on main dividing partitions and side or front or back. Such modules of drawers of various width are assembled together to form a unit which can be used in kitchen, office, laboratories, hospitals, industries, stores. These units saves, organizes space according to available space and articles to be placed in the drawer.

No. of Pages : 25 No. of Claims : 10

(12) PATENT APPLICATION PUBLICATION
(19) INDIA
(22) Date of filing of Application :03/05/2014

(21) Application No.834/MUMNP/2014 A
(43) Publication Date : 17/04/2015

(54) Title of the invention : OIL FILM BEARING

(51) International classification :F16C33/20,F16C33/02,F16C33/26
(31) Priority Document No :61/543235
(32) Priority Date :04/10/2011
(33) Name of priority country :U.S.A.
(86) International Application No :PCT/IB2012/002511
Filing Date :04/10/2012
(87) International Publication No :WO 2013/050876
(61) Patent of Addition to Application Number :NA
Filing Date :NA
(62) Divisional to Application Number :NA
Filing Date :NA

(71)**Name of Applicant :**
1)CORTS ENGINEERING GMBH & CO. KG
Address of Applicant :Industriestrasse 30 42859 Remscheid Germany
(72)**Name of Inventor :**
1)CORTS Jochen

(57) Abstract :
An oil film bearing for supporting a roll neck in a rolling mill, suitable in particular for transmitting high bearing forces when the bearing partners are slightly and slowly moved with respect to each other, has a bearing surface into which are incorporated rods made of a friction- reducing material (e.g., low friction compounds), which extend in a substantially perpendicular direction to the bearing surface. The rods are deformed during heat processing to define a bearing surface. The bearing partner, such as a roll sleeve, rests on the free face of the deformed rods.

No. of Pages : 25 No. of Claims : 21

(12) PATENT APPLICATION PUBLICATION
(19) INDIA
(22) Date of filing of Application :09/05/2014
(21) Application No.880/MUMNP/2014 A
(43) Publication Date : 17/04/2015

(54) Title of the invention : BUFFERED OXYGEN THERAPEUTIC

(51) International classification	:A61K31/03,A61K31/025,A61K31/685
(31) Priority Document No	:13/273115
(32) Priority Date	:13/10/2011
(33) Name of priority country	:U.S.A.
(86) International Application No Filing Date	:PCT/US2012/060284 :15/10/2012
(87) International Publication No	:WO 2013/056246
(61) Patent of Addition to Application Number Filing Date	:NA :NA
(62) Divisional to Application Number Filing Date	:NA :NA

(71)**Name of Applicant :**
1)NUVOX PHARMA L.L.C.
Address of Applicant :1635 E. 18th Street Tucson AZ 85719 U.S.A. U.S.A.
(72)**Name of Inventor :**
1)UNGER Evan C.
2)JOHNSON Jennifer L.

(57) Abstract :
An oxygen therapeutic composition comprising a perfluorocarbon material a viscosity modifier a buffer wherein the buffer stabilizes a pH of the composition at between about 6.5 to about 7.5 and wherein the composition comprises a viscosity of about 2.0 to about 3.5 mPas and wherein the fluorocarbon has a boiling point of about 4 degrees Celsius to about 60 degrees Celsius.

No. of Pages : 28 No. of Claims : 10

(12) PATENT APPLICATION PUBLICATION
(19) INDIA
(22) Date of filing of Application :09/05/2014
(21) Application No.881/MUMNP/2014 A
(43) Publication Date : 17/04/2015

(54) Title of the invention : METHOD FOR PRODUCING CHLORINATED VINYL CHLORIDE BASED RESIN

(51) International classification :C08F8/22
(31) Priority Document No :2011-264210
(32) Priority Date :02/12/2011
(33) Name of priority country :Japan
(86) International Application No :PCT/JP2012/081164
Filing Date :30/11/2012
(87) International Publication No :WO 2013/081133
(61) Patent of Addition to Application Number :NA
Filing Date :NA
(62) Divisional to Application Number :NA
Filing Date :NA

(71)**Name of Applicant :**
1)TOKUYAMA SEKISUI CO. LTD.
Address of Applicant :4 4 Nishitenma 2 chome Kita ku Osaka shi Osaka 5308565 Japan
(72)**Name of Inventor :**
1)HARADA Masatoshi

(57) Abstract :
The present invention provides a method for producing a chlorinated vinyl chloride based resin which has excellent thermal stability (initial coloring performance heat resistant stability) and from which a translucent molded article is obtained. The method for producing a chlorinated vinyl chloride based resin comprises in the process of running a vinyl chloride based resin through a thermal chlorination reaction in a water suspension state in a sealable reaction vessel running a first thermal chlorination reaction while also heating a water suspension of vinyl chloride based resin powder to a predetermined temperature in the temperature range of 85°C to less than 95°C and thereafter running a second thermal chlorination reaction at the predetermined temperature; wherein chlorine gas is introduced to the reaction vessel at a water suspension temperature of 55 70°C to start a thermal chlorination reaction and the temperature inside the reaction vessel is raised to the predetermined temperature while staying at a temperature not greater than the glass transition temperature of the chlorinated vinyl chloride based resin inside the reaction vessel to run the first thermal chlorination reaction so that the chlorine content of the chlorinated vinyl chloride based resin inside the reaction vessel is 58 wt% to less than 60 wt% and thereafter the second thermal chlorination reaction is run at the predetermined temperature.

No. of Pages : 41 No. of Claims : 5

(12) PATENT APPLICATION PUBLICATION
(19) INDIA
(22) Date of filing of Application :21/07/2014
(21) Application No.1471/MUMNP/2014 A
(43) Publication Date : 17/04/2015

(54) Title of the invention : PROCESS FOR COOLING AND WASHING BIOMASS SYNGAS AND SYSTEM THEREOF

(51) International classification :C10K1/00,C10K1/02,C10K1/06
(31) Priority Document No :201110449513.7
(32) Priority Date :29/12/2011
(33) Name of priority country :China
(86) International Application No:PCT/CN2012/083597
Filing Date :26/10/2012
(87) International Publication No :WO 2013/097536
(61) Patent of Addition to Application Number :NA
Filing Date :NA
(62) Divisional to Application Number :NA
Filing Date :NA

(71)**Name of Applicant :**
1)WUHAN KAIDI GENERAL RESEARCH INSTITUTE OF ENGINEERING & TECHNOLOGY CO. LTD.
Address of Applicant :Kaidi Building T1 jiangxia Avenue EastlakeNewtech Development Zone Wuhan Hubei 430223 China
(72)**Name of Inventor :**
1)ZHANG Yanfeng
2)LIU Wenyan
3)XIA Minggui
4)ZHANG Liang

(57) Abstract :
Provided is a process for cooling and washing a biomass syngas and system thereof. The process is directed to a biomass syngas with a temperature of 1000 1100°C a dust content of less than 20 g/Nm and a tar content of less than 3g/Nm; the process comprises the following steps: 1) the syngas is sent to a chilling tower (2) to be chilled and to solidify slag; 2)after being chilled to solidify slag the syngas is sent to a waste heat boiler to perform recycling of the waste heat and condense the heavy tar in the syngas; 3) the syngas passed through the waste heat boiler is sent to a washing and cooling tower (5) for dust extraction and cooling; 4) the syngas remaining after dust extraction and cooling in the washing and cooling tower (5) is sent to an electrostatic precipitator (6) to perform deep extraction of dust and tar removal. The system comprises a chilling tower (2) linked to a high temperature pyrolysis biomass gasifier; the chilling tower (2)is linked to the waste heat boiler the washing and cooling tower (5) and the electrostatic precipitator (6) via syngas pipelines in succession. The present process is fluent simple in system structure highly efficient in heat use and syngas treatment gives good results.

No. of Pages : 31 No. of Claims : 24

(12) PATENT APPLICATION PUBLICATION
(19) INDIA
(22) Date of filing of Application :26/04/2013
(21) Application No.1538/MUM/2013 A
(43) Publication Date : 17/04/2015

(54) Title of the invention : A PAINTING PROCESS AND METHOD & SYSTEM THEREFOR

(51) International classification	:B44D2/00, B05D7/00
(31) Priority Document No	:NA
(32) Priority Date	:NA
(33) Name of priority country	:NA
(86) International Application No	:NA
Filing Date	:NA
(87) International Publication No	: NA
(61) Patent of Addition to Application Number	:NA
Filing Date	:NA
(62) Divisional to Application Number	:NA
Filing Date	:NA

(71)**Name of Applicant :**
1)BAJAJ AUTO LIMITED
Address of Applicant :AKURDI, PUNE - 411035, STATE OF MAHARASHTRA, INDIA.
(72)**Name of Inventor :**
1)KULKARNI SANJAY HARI
2)ANKAM VINOD LAXMAN
3)RAWAT KAPIL DEV SINGH

(57) Abstract :
This invention relates to a process and method of painting of components over a wet on wet painting process on a surface of a material. The process involves electrolytically depositing the acrylic resin paint (ACED) on the surface then drying the surface with velocity air, spraying water based top coat paint and oven baking the unbaked base coat and top coat paint simultaneously. The invention also involves arranging all the corresponding means such as electrolytic deposition means, a drying means, a paint spraying means and a baking means in series and in sequence.

No. of Pages : 23 No. of Claims : 21

(12) PATENT APPLICATION PUBLICATION
(19) INDIA
(22) Date of filing of Application :26/04/2013

(21) Application No.1539/MUM/2013 A
(43) Publication Date : 17/04/2015

(54) Title of the invention : 'SPEECH RECOGNITION SYSTEM WITH ADAPTABLE SPEAKER AND COMMAND

(51) International classification	:G10L15/20, G10L15/06
(31) Priority Document No	:NA
(32) Priority Date	:NA
(33) Name of priority country	:NA
(86) International Application No	:NA
Filing Date	:NA
(87) International Publication No	: NA
(61) Patent of Addition to Application Number	:NA
Filing Date	:NA
(62) Divisional to Application Number	:NA
Filing Date	:NA

(71)**Name of Applicant :**
1)DARSHAN NAISHADHBHAI PANDYA
Address of Applicant :ASHUTOSH, AMRUTA SOCIETY-1, BLOCK NO. 49/B, 150 FEET RAIYA RING ROAD, RAJKOT, GUJARAT, INDIA - 360 005. Gujarat India
2)DHRUVIK KHIMJIBHAI MONPARA
3)YASHPAL VIBHULAL JAVIA
4)KENIL JITENDRABHAI DESAI
5)DHAVAL CHANDUBHAI GONDALIYA
6)ASHISH MAHENDRABHAI KOTHARI
(72)**Name of Inventor :**
1)DARSHAN NAISHADHBHAI PANDYA
2)DHRUVIK KHIMJIBHAI MONPARA
3)YASHPAL VIBHULAL JAVIA
4)KENIL JITENDRABHAI DESAI
5)DHAVAL CHANDUBHAI GONDALIYA
6)ASHISH MAHENDRABHAI KOTHARI

(57) Abstract :
Here, we worked on the speech processing technique wherein we took audio speech as input signal from user and by recognition process, we perceive recorded word. Specifically we concentrated on the amplitude and zero cross of speech signal, and two of the most important and useful terms, namely MFCC and Mahalanobis distance, for the purpose of getting an efficient outcomes. We made a vast database of different words spoken by various speakers, which contains all magnified researched details of manipulated features. Now for real time comparison we took a speech signal from a user and stored it in digital format, then manipulate algorithm features likewise Amplitude and Zero-cross for block as well in sub-block. Store these manipulate result of real time input speech and calculate MFCC of that, after that we take a decision for recognition. If input speech matched with database stored speech that result displayed otherwise it gives message to record again.

No. of Pages : 29 No. of Claims : 5

(12) PATENT APPLICATION PUBLICATION
(19) INDIA
(22) Date of filing of Application :12/05/2014
(21) Application No.887/MUMNP/2014 A
(43) Publication Date : 17/04/2015

(54) Title of the invention : LIPOSOMAL CORTICOSTEROIDS FOR TREATMENT OF INFLAMMATORY DISORDERS IN HUMANS

(51) International classification :A61K9/127,A61K31/573,A61P29/00
(31) Priority Document No :PCT/NL2011/050755
(32) Priority Date :04/11/2011
(33) Name of priority country :Netherlands
(86) International Application No :PCT/NL2012/050766
Filing Date :02/11/2012
(87) International Publication No :WO 2013/066179
(61) Patent of Addition to Application Number :NA
Filing Date :NA
(62) Divisional to Application Number :NA
Filing Date :NA

(71)**Name of Applicant :**
1)ENCELADUS PHARMACEUTICALS B.V.
Address of Applicant :St. Annastraat 38A NL 1411 PH Naarden Netherlands
(72)**Name of Inventor :**
1)METSELAAR Josbert Maarten

(57) Abstract :
The invention relates to a pharmaceutical composition comprising liposomes composed of non charged vesicle forming lipids optionally including not more than 10 mole percent of negatively charged vesicle forming lipids and/or not more than 10 mole percent of PEGylated lipids the liposomes having a selected mean particle diameter in the size range of 40 200 nm and comprising a first corticosteroid in water soluble form for the site specific treatment of inflammatory disorders in humans providing in human patients a fast strong and durable anti inflammatory effect for at least 2 weeks at a dose of at most 5 mg/kg body weight of prednisolone or an equipotent dose corticosteroid other than prednisolone at a treatment frequency of at most once per two weeks. Furthermore the present invention relates to the application of the above mentioned pharmaceutical composition given as intervention therapy in inflammatory disorders such as rheumatic disease or a related inflammatory connective tissue disorder inflammatory diseases of the kidney or inflammatory bowel disorders in combination with chronic therapy with a second free corticosteroid formulation or in combination with chronic treatment with a disease modifying agent such as methotrexate.

No. of Pages : 38 No. of Claims : 19

(12) PATENT APPLICATION PUBLICATION
(19) INDIA
(22) Date of filing of Application :26/04/2013
(21) Application No.1543/MUM/2013 A
(43) Publication Date : 17/04/2015

(54) Title of the invention : NOVEL SINGLE CUSTOM CONTROL TO SET VARIOUS WAVEFORM PARAMETERS FOR GENERATING WAVEFORMS IN AWG

(51) International classification	:C07K14/415, B82Y30/00
(31) Priority Document No	:NA
(32) Priority Date	:NA
(33) Name of priority country	:NA
(86) International Application No	:NA
Filing Date	:NA
(87) International Publication No	: NA
(61) Patent of Addition to Application Number	:NA
Filing Date	:NA
(62) Divisional to Application Number	:NA
Filing Date	:NA

(71)**Name of Applicant :**
1)TEKTRONIX, INC.
Address of Applicant :14200 SW KARL BRAUN DRIVE, P.O. BOX 500, BEAVERTON, OREGON 97077-0001 U.S.A.
(72)**Name of Inventor :**
1)NAVEEN, KAVITHA
2)SHERINA, M.S.

(57) Abstract :
An aspect of the invention includes a computer (110) with a processor and a memory. The processor can generate a control (130) for an Arbitrary Waveform Generator (135). The control (130) includes various buttons (409, 412, 415, 418, 421, 424, 427, 430, 460, 442, 454, 451, 448, 433, 439, 436, 463, 466, 469, 472, 457, 445, 478), a drop-down list (403), and a text box (406). Upon selection of a button, the control (130) is automatically updated to update the drop-down list (403) and the text box (406) as appropriate. The control (130) is presented on a single screen.

No. of Pages : 26 No. of Claims : 15

(12) PATENT APPLICATION PUBLICATION
(19) INDIA
(22) Date of filing of Application :06/05/2014

(21) Application No.849/MUMNP/2014 A
(43) Publication Date : 17/04/2015

(54) Title of the invention : THREADED INJECTOR MOUNT

(51) International classification :F01N3/24,F01N3/025,F01N3/36
(31) Priority Document No :13/301914
(32) Priority Date :22/11/2011
(33) Name of priority country :U.S.A.
(86) International Application No :PCT/US2012/066046
Filing Date :20/11/2012
(87) International Publication No:WO 2013/078195
(61) Patent of Addition to Application Number :NA
Filing Date :NA
(62) Divisional to Application Number :NA
Filing Date :NA

(71)**Name of Applicant :**
1)TENNECO AUTOMOTIVE OPERATING COMPANY INC.
Address of Applicant :500 North Field Drive Lake Forest Illinois 60045 U.S.A.
(72)**Name of Inventor :**
1)POPOVICH Jeremy

(57) Abstract :
A system for mounting an injector to an exhaust conduit in an exhaust treatment system includes a boss having an externally threaded surface. The boss is adapted to be fixed to the exhaust conduit. A retention member is adapted to be coupled to the injector housing to transfer an axial load to the housing. An internally threaded nut includes a flange engaging the retention member. The nut threadingly engages with the boss to clamp the housing of the injector to the boss as the nut is rotated.

No. of Pages : 12 No. of Claims : 16

(12) PATENT APPLICATION PUBLICATION
(19) INDIA
(22) Date of filing of Application :13/05/2014
(21) Application No.890/MUMNP/2014 A
(43) Publication Date : 17/04/2015

(54) Title of the invention : METHOD FOR TREATING THROMBOTIC DISORDERS USING QUERCETIN CONTAINING COMPOSITIONS

(51) International classification	:A61K31/352,A61K31/35,A61K31/375
(31) Priority Document No	:13/272508
(32) Priority Date	:13/10/2011
(33) Name of priority country	:U.S.A.
(86) International Application No Filing Date	:PCT/US2012/059341 :09/10/2012
(87) International Publication No	:WO 2013/055679
(61) Patent of Addition to Application Number Filing Date	:NA :NA
(62) Divisional to Application Number Filing Date	:NA :NA

(71)**Name of Applicant :**
1)QUERCEGEN PHARMACEUTICALS LLC
Address of Applicant :225 Cedar Hill St, Ste 200, Marlborough, MA 01752, USA.
(72)**Name of Inventor :**
1)LINES Thomas Christian

(57) Abstract :
A method for treating thrombotic disorders using a composition containing quercetin together with one or more of vitamin B vitamin C and folic acid. Also disclosed is a method of improving the efficacy of a blood thinning medication by co administering a composition containing quercetin together with one or more of vitamin B vitamin C and folic acid to a subject being treated with a blood thinning medication.

No. of Pages : 14 No. of Claims : 20

(12) PATENT APPLICATION PUBLICATION
(19) INDIA
(22) Date of filing of Application :13/05/2014
(21) Application No.891/MUMNP/2014 A
(43) Publication Date : 17/04/2015

(54) Title of the invention : METHODS AND APPARATUS FOR UPDATING THE UE CAPABILITY IN AN E UTRAN

(51) International classification :H04W36/08
(31) Priority Document No :NA
(32) Priority Date :NA
(33) Name of priority country :NA
(86) International Application No :PCT/CN2011/081791
Filing Date :04/11/2011
(87) International Publication No :WO 2013/063793
(61) Patent of Addition to Application Number :NA
Filing Date :NA
(62) Divisional to Application Number :NA
Filing Date :NA

(71)**Name of Applicant :**
1)QUALCOMM Incorporated
Address of Applicant :ATTN: International IP Administration 5775 Morehouse Drive San Diego California 92121 1714 U.S.A. U.S.A.
(72)**Name of Inventor :**
1)GHOLMIEH Aziz
2)CASACCIA Lorenzo
3)ZHU Xipeng
4)KITAZOE Masato
5)SONG Osok

(57) Abstract :
A method, an apparatus, and a computer program product for wireless communication are provided. The apparatus transmits a first set of capabilities to a first cell. The first set of capabilities is for communication with the first cell. The apparatus transmits information associated with a second set of capabilities to the first cell. The second set of capabilities is for communication with a second cell. The apparatus moves from the first cell to the second cell. The apparatus communicates with the second cell based on the transmitted information.

No. of Pages : 92 No. of Claims : 75

(12) PATENT APPLICATION PUBLICATION
(19) INDIA
(22) Date of filing of Application :13/05/2014
(21) Application No.892/MUMNP/2014 A
(43) Publication Date : 17/04/2015

(54) Title of the invention : METHODS AND APPARATUS FOR REDUCING INTERFERENCE IN A HETEROGENEOUS NETWORK

(51) International classification :H04W72/04
(31) Priority Document No :61/559343
(32) Priority Date :14/11/2011
(33) Name of priority country :U.S.A.
(86) International Application No :PCT/US2012/064924
Filing Date :14/11/2012
(87) International Publication No :WO 2013/074564
(61) Patent of Addition to Application Number :NA
Filing Date :NA
(62) Divisional to Application Number :NA
Filing Date :NA

(71)**Name of Applicant :**
1)QUALCOMM INCORPORATED
Address of Applicant :ATTN: International IP Administration 5775 Morehouse Drive San Diego California 92121 1714 U.S.A. U.S.A.
(72)**Name of Inventor :**
1)SONG Osok
2)VAJAPEYAM Madhavan S.

(57) Abstract :
Certain aspects relate to methods and apparatus for reducing interference in a heterogeneous network. Certain aspects relate to methods and apparatus for delinking downlink and uplink resource partitioning in a heterogeneous network. In aspects the delinking is accomplished by reliably delivering uplink grant to a UE e.g. pico UE in a pico CRE region without using downlink Almost Blank Subframe (ABS) resources in which an interfering cell limits transmission to reduce interference to other victim cells. In techniques instead of using the regular PDCCH sent in downlink ABS resources for uplink grant transmission the uplink grant is sent on another more reliable downlink control channel using resources configured to avoid interference with transmissions from an interfering base station. In techniques the DL grant is sent on PDCCH in non downlink ABS resources but the UE employs enhanced UE capabilities (e.g. interference cancellation) to process the received control information.

No. of Pages : 70 No. of Claims : 131

(12) PATENT APPLICATION PUBLICATION
(19) INDIA
(22) Date of filing of Application :05/05/2014
(21) Application No.847/MUMNP/2014 A
(43) Publication Date : 17/04/2015

(54) Title of the invention : MINIMIZATION OF DRIVE TESTS FOR UPLINK LINK COVERAGE

(51) International classification :H04W24/10,H04W64/00
(31) Priority Document No :61/556581
(32) Priority Date :07/11/2011
(33) Name of priority country :U.S.A.
(86) International Application No :PCT/CN2012/084219
Filing Date :07/11/2012
(87) International Publication No :WO 2013/067934
(61) Patent of Addition to Application Number :NA
Filing Date :NA
(62) Divisional to Application Number :NA
Filing Date :NA

(71)**Name of Applicant :**
1)MEDIATEK INC.
Address of Applicant :No.1 Dusing Road 1st Science Based Industrial Park Hsin Chu Taiwan 300 China China
(72)**Name of Inventor :**
1)HWANG Chien Hwa
2)TSAI Meng Ying
3)JOHANSSON Per Johan Mikael

(57) Abstract :
A method of using additional uplink measurements for MDT UL coverage is provided. A base station (eNodeB) establishes a radio resource control (RRC) connection with a user equipment (UE) in a mobile communication network. The eNodeB and the UE are configured for Minimization of Drive Test (MDT). The eNodeB receives a Power Headroom Report (PRH) corresponds to a Physical Uplink Shared Channel (PUSCH) from the UE and forwards the PHR to an MDT server. The eNodeB performs uplink measurement of a Demodulation Reference Signal (DM RS) allocated in the PUSCH. The uplink measurement also involves measuring an uplink Received Interference Power (RIP) associated with the PUSCH. The eNodeB then reports uplink measurement results to the MDT server. The MDT server is able to determine uplink coverage based on the PHR and the uplink measurement results.

No. of Pages : 21 No. of Claims : 20

(12) PATENT APPLICATION PUBLICATION
(19) INDIA
(22) Date of filing of Application :06/05/2014
(21) Application No.848/MUMNP/2014 A
(43) Publication Date : 17/04/2015

(54) Title of the invention : TECHNIQUES FOR CALCULATING GAS CONCENTRATIONS IN A FLUID ENVIRONMENT

(51) International classification :G06F19/00,G01N27/26
(31) Priority Document No :13/269368
(32) Priority Date :07/10/2011
(33) Name of priority country :U.S.A.
(86) International Application No :PCT/US2012/058834
Filing Date :05/10/2012
(87) International Publication No :WO 2013/052720
(61) Patent of Addition to Application Number :NA
Filing Date :NA
(62) Divisional to Application Number :NA
Filing Date :NA

(71)**Name of Applicant :**
1)H2SCAN CORPORATION
Address of Applicant :272 15 Tunberry Lane Suite A Valencia California 91355 U.S.A.
(72)**Name of Inventor :**
1)LAKHOTIA Vikas
2)MACLAY G. Jordan

(57) Abstract :
A method can be performed by adjusting a temperature of a gas sensor to a first temperature value for a first period of time and a second temperature value for a second period of time. The gas sensor signal may be measured during the first period of time to determine a first signal value and during the second period of time to determine a second value. Then concentration information for at least one gas is calculated according to the first signal value and the second signal value. While the gas sensor signal may include information about a presence of a first gas and a second gas the concentration information for the at least one gas may not substantially include concentration information for the second gas.

No. of Pages : 44 No. of Claims : 30

(12) PATENT APPLICATION PUBLICATION
(19) INDIA
(22) Date of filing of Application :13/05/2014
(21) Application No.893/MUMNP/2014 A
(43) Publication Date : 17/04/2015

(54) Title of the invention : FATIGUE RELIEVING HERBAL EXTRACTS AND BEVERAGES COMPRISING THE SAME

(51) International classification :A23L1/30,A23L2/52
(31) Priority Document No :13/311833
(32) Priority Date :06/12/2011
(33) Name of priority country :U.S.A.
(86) International Application No :PCT/US2012/067911
Filing Date :05/12/2012
(87) International Publication No :WO 2013/085974
(61) Patent of Addition to Application Number :NA
Filing Date :NA
(62) Divisional to Application Number :NA
Filing Date :NA

(71)**Name of Applicant :**
1)THE CONCENTRATE MANUFACTURING COMPANY OF IRELAND
Address of Applicant :Corner House 20 Parliament Street Hamilton HM 12 Bermuda
(72)**Name of Inventor :**
1)CAI Ya
2)JIAN Jiangbo
3)LIU Weichang
4)PENG Xiaoyun
5)ZOU Minliang

(57) Abstract :
Herbal extracts are described. The extracts are prepared from combinations of herb parts. The extracts and beverage products containing the extracts provide the consumer with a perception of increased energy.

No. of Pages : 51 No. of Claims : 21

(12) PATENT APPLICATION PUBLICATION
(19) INDIA
(22) Date of filing of Application :13/05/2014
(21) Application No.894/MUMNP/2014 A
(43) Publication Date : 17/04/2015

(54) Title of the invention : RECEPTION OF WLAN LOCATION INFORMATION FROM A WWAN CONNECTION

(51) International classification	:H04W48/20,H04L29/08,H04W88/06
(31) Priority Document No	:13/276831
(32) Priority Date	:19/10/2011
(33) Name of priority country	:U.S.A.
(86) International Application No	:PCT/US2012/061160
Filing Date	:19/10/2012
(87) International Publication No	:WO 2013/059696
(61) Patent of Addition to Application Number	:NA
Filing Date	:NA
(62) Divisional to Application Number	:NA
Filing Date	:NA

(71)**Name of Applicant :**
1)QUALCOMM INCORPORATED
Address of Applicant :Attn: International Ip Administration 5775 Morehouse Drive San Diego California 92121 U.S.A..
(72)**Name of Inventor :**
1)ANCHAN Kirankumar
2)BREWER Beth A.

(57) Abstract :
In an embodiment, a UE transmits information regarding its local environment to a WWAN-based application server. The application server generates a list of WLAN APs that are in a vicinity of the UE based on the local environment information. The application server sends, to the UE, WLAN AP selection assistance information (SAI) that includes at least the list of WLAN APs and (ii) navigation information by which the UE can navigate to the listed WLAN APs. The UE receives the SAI and provides a user of the UE with directions to a selected WLAN AP based on the SAI. In another embodiment, a communication entity advertises a UEs connection to a WLAN AP along with information related to an estimated duration of the UEs connection. Another communication entity receives the connection advertisement and determines whether to transmit data to the UE based on the advertisement.

No. of Pages : 80 No. of Claims : 37

(12) PATENT APPLICATION PUBLICATION
(19) INDIA
(22) Date of filing of Application :29/04/2013
(21) Application No.1548/MUM/2013 A
(43) Publication Date : 17/04/2015

(54) Title of the invention : A SYSTEM AND METHOD FOR AUTOMATED TRADING

(51) International classification	:G06F19/00, G06Q 40/00
(31) Priority Document No	:NA
(32) Priority Date	:NA
(33) Name of priority country	:NA
(86) International Application No	:NA
Filing Date	:NA
(87) International Publication No	: NA
(61) Patent of Addition to Application Number	:NA
Filing Date	:NA
(62) Divisional to Application Number	:NA
Filing Date	:NA

(71)**Name of Applicant :**
1)SUBHASH BHAGWATI SONI
Address of Applicant :B/302, KEMP PLAZA, OFF LINK ROAD MINDSPACE, CHINCHOLI BUNDER ROAD MALAD (WEST), MUMBAI - 400 064, MAHARASHTRA, INDIA
(72)**Name of Inventor :**
1)SUBHASH BHAGWATI SONI

(57) Abstract :
The present invention provides a system and method for automated trading of financial instruments. The system including a server computer comprising algorithm trading manager with a rule memory, a parameter value memory, a strategy memory, a strategy generation unit and an interpreter unit. The system and method includes a double reverse trading strategyiand trend scalper strategy.

No. of Pages : 22 No. of Claims : 12

(12) PATENT APPLICATION PUBLICATION
(19) INDIA
(22) Date of filing of Application :06/05/2014
(21) Application No.850/MUMNP/2014 A
(43) Publication Date : 17/04/2015

(54) Title of the invention : PROCESS FOR THE PREPARATION OF AN ENDOTHELIN RECEPTOR ANTAGONIST

(51) International classification :C07D239/34,C07D239/46,C07C69/00
(31) Priority Document No :2943/MUM/2011
(32) Priority Date :19/10/2011
(33) Name of priority country :India
(86) International Application No :PCT/GB2012/000798
Filing Date :19/10/2012
(87) International Publication No :WO 2013/057468
(61) Patent of Addition to Application Number :NA
Filing Date :NA
(62) Divisional to Application Number :NA
Filing Date :NA

(71)**Name of Applicant :**
1)CIPLA LIMITED
Address of Applicant :Mumbai Central Mumbai 400 008, INDIA Maharashtra India
(72)**Name of Inventor :**
1)RAO Dharmaraj Ramachandra
2)KANKAN Rajendra Narayanrao
3)NAIK Sanjay
4)GHAGARE Maruti
5)CHIKHALIKAR Sandip Vasant

(57) Abstract :
The present invention relates to a novel process for the preparation of a compound of formula (I) wherein R is a methyl or methoxy group; to certain novel intermediates prepared in such a process and their use.

No. of Pages : 35 No. of Claims : 45

(12) PATENT APPLICATION PUBLICATION
(19) INDIA
(22) Date of filing of Application :06/05/2014
(21) Application No.851/MUMNP/2014 A
(43) Publication Date : 17/04/2015

(54) Title of the invention : HYBRID NETWORKING SYSTEM WITH SEAMLESS PATH SWITCHING

(51) International classification :H04L1/18
(31) Priority Document No :13/301562
(32) Priority Date :21/11/2011
(33) Name of priority country :U.S.A.
(86) International Application No :PCT/US2012/066105
Filing Date :20/11/2012
(87) International Publication No :WO 2013/078226
(61) Patent of Addition to Application Number :NA
Filing Date :NA
(62) Divisional to Application Number :NA
Filing Date :NA

(71)**Name of Applicant :**
1)QUALCOMM INCORPORATED
Address of Applicant :ATTN: International IP Administration 5775 Morehouse Drive San Diego California 92121 1714 U.S.A.
(72)**Name of Inventor :**
1)COHEN Etan Gur
2)CHEN Kai

(57) Abstract :
System and method for switching a stream to a new transmission medium. A first stream may be received. A first plurality of packets of the first stream may be transmitted to a second device on a first transmission medium. The first plurality of packets may include one or more index marker packets. It may be determined that at least a portion of the first plurality of packets may not have been received by the second device. A second plurality of packets of the first stream may be transmitted to the second device on a second transmission medium. The second plurality of packets may include at least a subset of the first plurality of packets and at least a subset of the one or more index marker packets. The one or more index marker packets may be configured for use by the second device to detect and discard duplicate packets.

No. of Pages : 87 No. of Claims : 28

(12) PATENT APPLICATION PUBLICATION
(19) INDIA
(22) Date of filing of Application :13/05/2014
(21) Application No.896/MUMNP/2014 A
(43) Publication Date : 17/04/2015

(54) Title of the invention : DIESEL ENGINE COMBUSTION CHAMBER METHOD FOR IGNITING A FUEL AIR MIXTURE IN A COMBUSTION CHAMBER OF A DIESEL ENGINE AND DIESEL ENGINE

(51) International classification :F02P13/00,F02F1/24,F02B19/10
(31) Priority Document No :10 2011 116 372.0
(32) Priority Date :14/10/2011
(33) Name of priority country :Germany
(86) International Application No :PCT/IB2012/002237
Filing Date :15/10/2012
(87) International Publication No :WO 2013/054188
(61) Patent of Addition to Application Number :NA
Filing Date :NA
(62) Divisional to Application Number :NA
Filing Date :NA

(71)**Name of Applicant :**
1)BORISSOVSKIY Vladimir
Address of Applicant :Philipp Rosenthal Str. 9 04103 Leipzig Germany
(72)**Name of Inventor :**
1)BORISSOVSKIY Vladimir

(57) Abstract :
The present invention relates to a combustion chamber for diesel engines a method for igniting a diesel fuel air mixture in a combustion chamber of a diesel engine and diesel engine. Said combustion chamber is characterised in that it comprises a piston (2) having a piston head surface and a cylinder head (1) having a cylinder head surface and a combustion chamber axis (7). At least one recess (3 4) is provided in said piston head surface and/or in the cylinder head surface and an ignition initiator (6) which is arranged along the combustion chamber axis (7) is designed to produce a linear ignition along the combustion chamber axis (7).

No. of Pages : 27 No. of Claims : 15

(12) PATENT APPLICATION PUBLICATION
(19) INDIA
(22) Date of filing of Application :13/05/2014
(21) Application No.897/MUMNP/2014 A
(43) Publication Date : 17/04/2015

(54) Title of the invention : METHOD SYSTEM OF PARKING A VEHICLE USING ONLY FRONT ROAD COURSE AND PLACEMENT OF THE REAR OF THE VEHICLE IN A FINAL PARKING POSITION BY AN AUXILIARY MECHANISM

(51) International classification :B60S9/21,B60S9/215,B60S9/205
(31) Priority Document No :NA
(32) Priority Date :NA
(33) Name of priority country :NA
(86) International Application No :PCT/GR2012/000007
Filing Date :23/02/2012
(87) International Publication No :WO 2013/124694
(61) Patent of Addition to Application Number :NA
Filing Date :NA
(62) Divisional to Application Number :NA
Filing Date :NA

(71)**Name of Applicant :**
1)TSITIMAKIS Panagiotis
Address of Applicant :Viale Paolucci 22 30175 Marghera Venezia Italy
(72)**Name of Inventor :**
1)TSITIMAKIS Panagiotis

(57) Abstract :
Method system of parking a vehicle using only front road course and placement of the rear of the vehicle in a final parking position by an auxiliary mechanism. A method system of parking a vehicle along parking provision where the only thing that the driver has to do is to place the front of the vehicle using front road course both near to the front parked vehicle as well as to the clay of the pavement. The installation of the rear of the vehicle to the final position for the vehicle s immobilization occurs by an auxiliary side shift mechanism mounted to the back and lower part of the rear of the vehicle. The auxiliary facility consists of one or more wheels of a relatively small diameter and as for their movement are vertically installed to the stable wheels of the vehicle. They are also connected to the lower part of a mechanism that can lift enough the vehicle; in order the side shift is capable when the order is given. The whole system of the wheels and lifting mechanism is placed in operation status through descend or withdrawal only after giving an order so not to be exposed when it is not functioning.

No. of Pages : 13 No. of Claims : 5

(12) PATENT APPLICATION PUBLICATION
(19) INDIA
(22) Date of filing of Application :07/05/2014
(21) Application No.852/MUMNP/2014 A
(43) Publication Date : 17/04/2015

(54) Title of the invention : POWER CONTROL

(51) International classification :H02M3/335,H02M7/539
(31) Priority Document No :2011904189
(32) Priority Date :14/10/2011
(33) Name of priority country :Australia
(86) International Application No :PCT/AU2012/001246
Filing Date :15/10/2012
(87) International Publication No :WO 2013/053020
(61) Patent of Addition to Application Number :NA
Filing Date :NA
(62) Divisional to Application Number :NA
Filing Date :NA

(71)**Name of Applicant :**
1)INDICE PTY LTD
Address of Applicant :Unit 1 1100 1102 Toorak Road Camberwell VIC 3124 Australia
(72)**Name of Inventor :**
1)HAMOND James

(57) Abstract :
A Class E amplifier having a FET with a transistor (T2) connected via a serial LC circuit to the load and connected to a supply voltage via a constant current source the amplifier further including a resonant controller wherein the resonant controller provides power control for an AC application and includes resonance tracking system of an input inductor being fed by a power source with the resonance tracking system using a resistor resonance detector having two sense resistor loads in series.

No. of Pages : 31 No. of Claims : 24

(12) PATENT APPLICATION PUBLICATION
(19) INDIA
(22) Date of filing of Application :07/05/2014
(21) Application No.853/MUMNP/2014 A
(43) Publication Date : 17/04/2015

(54) Title of the invention : METHODS FOR PRODUCING CINNAMOLIDE AND/OR DRIMENDIOL

(51) International classification :C12N9/00,C12N15/82,C12N9/16
(31) Priority Document No :61/548934
(32) Priority Date :19/10/2011
(33) Name of priority country :U.S.A.
(86) International Application No :PCT/NL2012/050729
Filing Date :19/10/2012
(87) International Publication No :WO 2013/058654
(61) Patent of Addition to Application Number :NA
Filing Date :NA
(62) Divisional to Application Number :NA
Filing Date :NA

(71)**Name of Applicant :**
1)KEYGENE N.V.
Address of Applicant :P.O. Box 216 NL 6700 AE Wageningen Netherlands
(72)**Name of Inventor :**
1)BOUWMEESTER Hendrik Jan
2)HENQUET Maurice Gerard Leon
3)JONGSMA Maarten Anthonie

(57) Abstract :
Described is a nucleic acid sequence isolated from and encoding a drimenol oxidase protein expression vectors comprising such nucleic acid sequence chimeric genes comprising such nucleic acid sequence host cells or host organisms altered to harbour the drimenol oxidase nucleic acid sequence and the drimenol oxidase protein itself. Methods for producing cinnamolide and/or drimendiol and/or enhanced levels of cinnamolide and/or drimendiol in a cell or organism harbouring such nucleic acid sequence are provided. Transgenic organisms comprising the nucleic acid sequence or a chimeric gene of the invention are also provided. The present invention especially relates to transgenic plants with enhanced resistance to insects and enhanced insect antifeedant properties.

No. of Pages : 62 No. of Claims : 35

(12) PATENT APPLICATION PUBLICATION
(19) INDIA
(22) Date of filing of Application :07/05/2014
(21) Application No.854/MUMNP/2014 A
(43) Publication Date : 17/04/2015

(54) Title of the invention : METHODS AND COMPOSITIONS FOR PRODUCING DRIMENOL

(51) International classification :C12N9/16,C12N15/82
(31) Priority Document No :61/548934
(32) Priority Date :19/10/2011
(33) Name of priority country :U.S.A.
(86) International Application No :PCT/NL2012/050730
Filing Date :19/10/2012
(87) International Publication No :WO 2013/058655
(61) Patent of Addition to Application Number :NA
Filing Date :NA
(62) Divisional to Application Number :NA
Filing Date :NA

(71)**Name of Applicant :**
1)KEYGENE N.V.
Address of Applicant :P.O. Box 216 NL 6700 AE Wageningen Netherlands
(72)**Name of Inventor :**
1)BOUWMEESTER Hendrik Jan
2)HENQUET Maurice Gerard Leon
3)JONGSMA Maarten Anthonie

(57) Abstract :
The present invention relates to nucleic acids sequences derived from and/or and encoding drimenol synthase polypeptides. The present invention also provides the amino acid sequences of the polypeptides. The invention further provides host cells or organisms genetically modified to harbour the polynucleotides of the invention. A method to produce drimenol and/or a drimenol derivative by contacting farnesyl diphosphate with a polypeptide having a drimenol synthase activity is also part of this invention.

No. of Pages : 48 No. of Claims : 23

(12) PATENT APPLICATION PUBLICATION
(19) INDIA
(22) Date of filing of Application :14/05/2014
(21) Application No.898/MUMNP/2014 A
(43) Publication Date : 17/04/2015

(54) Title of the invention : ENCAPSULATED NITROGENATED FERTILIZER COMPOSITION WITH FIRE EXTINGUISHING AND FIRE SPREAD PREVENTING OPTION CORRESPONDING METHOD FOR MANUFACTURING SAME AND METHOD OF USE THEREOF

(51) International classification :C05C9/00
(31) Priority Document No :PI11064234
(32) Priority Date :14/10/2011
(33) Name of priority country :Brazil
(86) International Application No :PCT/BR2012/000387
Filing Date :11/10/2012
(87) International Publication No :WO 2013/053031
(61) Patent of Addition to Application Number :NA
Filing Date :NA
(62) Divisional to Application Number :NA
Filing Date :NA

(71)**Name of Applicant :**
1)ECOPLUS COMPANY COMERCIAL LTDA ME
Address of Applicant :Rua Joao Negrao 731 Conj 1209 Centro CEP 80.010.200 Curitiba Brazil
(72)**Name of Inventor :**
1)CARMO Hlio Mauricio do

(57) Abstract :
The invention encapsulated nitrogenated fertilizer composition with fire extinguishing and fire spread preventing option and corresponding method for manufacturing same and method of use thereof relates to encapsulated fertilizer compositions with slow and gradual nitrogen release in the form of ammonia for various cultures and which when the coating thereof is supplemented with or replaced by specific components and diluted in water before application synergistically act as a fire extinguisher and fire spread preventer to a method for manufacturing and using the composition which is designed to prevent the disintegration of the nitrogenated compound or potassium in order to lower the release of nitrogen in the form of ammonia to the plants and incorporate macronutrients and micronutrients into the nitrogenated compound and potassium adding value to the latter besides increasing the resistance of plants and promoting plant growth and plant protection during plant development. Spreading into furrows or over a surface is improved and more uniform carbon deficit is reduced as are the costs to farmers quotas and external compound shipping controls are avoided the compositions can be applied directly with the seed preventing seed and root rotting and burning using the same equipment with increased productivity making spread easier shortening the application time making storage and handling operations of all the fertilizers easier.

No. of Pages : 30 No. of Claims : 11

(12) PATENT APPLICATION PUBLICATION
(19) INDIA
(22) Date of filing of Application :22/04/2013
(21) Application No.1480/MUM/2013 A
(43) Publication Date : 17/04/2015

(54) Title of the invention : IMPROVED RECOVERY OF POTABLE ALCOHOL

(51) International classification	:B01D 3/00, B01D 11/00	(71)**Name of Applicant :** **1)PRAJ INDUSTRIES LIMITED** Address of Applicant :PRAJ HOUSE, BAVDHAN, PUNE - 411021, INDIA. Maharashtra India
(31) Priority Document No	:NA	(72)**Name of Inventor :**
(32) Priority Date	:NA	**1)GHANSHAM BABURAO DESHPANDE**
(33) Name of priority country	:NA	**2)SHRIKANT SUBHASH RATHI**
(86) International Application No	:NA	**3)RENURAMAN RAMESH MUNGSE**
Filing Date	:NA	**4)BHARTI UDDHAORAO GAHANE**
(87) International Publication No	: NA	**5)SHRIPAD GOPAL PATHAK**
(61) Patent of Addition to Application Number	:NA	**6)PRASHANT SURESH NAGAPURKAR**
Filing Date	:NA	
(62) Divisional to Application Number	:NA	
Filing Date	:NA	

(57) Abstract :
The invention relates to a process and apparatus for the improved recovery of potable alcohol and more particularly to an add-on apparatus that is used in conventional ethanol distillation plant, wherein different technical ethanol cuts obtained at different steps of ethanol distillation are collected and subjected to a process of purification as per the disclosed invention, and further recycling to said ethanol distillation plant increasing the overall recovery of potable alcohol of said plant.

No. of Pages : 14 No. of Claims : 14

(12) PATENT APPLICATION PUBLICATION
(19) INDIA
(22) Date of filing of Application :26/04/2013
(21) Application No.1540/MUM/2013 A
(43) Publication Date : 17/04/2015

(54) Title of the invention : LASER POINTER INTERACTION TO CONTROL PROJECTOR SCREEN USING IMAGE PROCESSING

(51) International classification	:G06F3/042, G09B5/02
(31) Priority Document No	:NA
(32) Priority Date	:NA
(33) Name of priority country	:NA
(86) International Application No	:NA
Filing Date	:NA
(87) International Publication No	: NA
(61) Patent of Addition to Application Number	:NA
Filing Date	:NA
(62) Divisional to Application Number	:NA
Filing Date	:NA

(71)**Name of Applicant :**
1)DARSHAN NAISHADHBHAI PANDYA
Address of Applicant :ASHUTOSH, AMRUTA SOCIETY-1, BLOCK NO. 49/B, 150 FEET RAIYA RING ROAD, RAJKOT, GUJARAT, INDIA - 360 005. Gujarat India
2)DHRUVIK KHIMJIBHAI MONPARA
3)YASHPAL VIBHULAL JAVIA
4)KENIL JITENDRABHAI DESAI
5)DHAVAL CHANDUBHAI GONDALIYA
6)ASHISH MAHENDRABHAI KOTHARI
(72)**Name of Inventor :**
1)DARSHAN NAISHADHBHAI PANDYA
2)DHRUVIK KHIMJIBHAI MONPARA
3)YASHPAL VIBHULAL JAVIA
4)KENIL JITENDRABHAI DESAI
5)DHAVAL CHANDUBHAI GONDALIYA
6)ASHISH MAHENDRABHAI KOTHARI

(57) Abstract :
This invention worked on a technique to make a simple projector being an interactive projector by using a LASER pointer. For this we specially concentrated on transformation namely Projective Transformation for a calibration purpose, feature extractions of a color image for locating a pointer and Java commands to perform mouse operations. We manipulate an interested part of a captured image and matched its co-ordinates with screen resolution. To locate a pointer we decide different threshold values for intensity of color, this can be obtained by subtracting gray scale of original color image from interested color image. After finding pointer location, according mouse operations are performed.

No. of Pages : 23 No. of Claims : 7

(12) PATENT APPLICATION PUBLICATION
(19) INDIA
(22) Date of filing of Application :26/04/2013
(21) Application No.1542/MUM/2013 A
(43) Publication Date : 17/04/2015

(54) Title of the invention : COMMUNICATION DEVICE AND ANTENNAS WITH HIGH ISOLATION CHARACTERISTICS

(51) International classification	:H01Q21/28, H01Q21/08
(31) Priority Document No	:13/627,311
(32) Priority Date	:26/09/2012
(33) Name of priority country	:U.S.A.
(86) International Application No	:NA
Filing Date	:NA
(87) International Publication No	: NA
(61) Patent of Addition to Application Number	:NA
Filing Date	:NA
(62) Divisional to Application Number	:NA
Filing Date	:NA

(71)**Name of Applicant :**
1)MEDIATEK SINGAPORE PTE. LTD.
Address of Applicant :#03-01 SALORIS NO. 1, FUSIONOPOLIS WALK, SINGAPORE 138628. Singapore
2)NATIONAL SUN YAT-SEN UNIVERSITY
(72)**Name of Inventor :**
1)KIN-LU WONG
2)YI-TING HSIEH
3)PO-WEI LIN
4)SHIH-HUANG YEH
5)TING-WEI KANG

(57) Abstract :
Title.: communication device and antennas with high isolation characteristics A communication device includes a system circuit board, a ground plane, a first antenna, a second antenna, a first metal element, and a second metal element. The ground plane is disposed on the system circuit board. The first metal element is substantially located between the first antenna and the second antenna. The first metal element is coupled to the ground plane such that a system ground plane is formed. The second metal element is adjacent to the first metal element and substantially located between the first antenna and the second antenna. The second metal element is coupled to the system ground plane. The first antenna, the second antenna, and the first metal element are substantially located at an edge of the system circuit board.

No. of Pages : 28 No. of Claims : 20

(12) PATENT APPLICATION PUBLICATION
(19) INDIA
(22) Date of filing of Application :15/05/2014
(21) Application No.905/MUMNP/2014 A
(43) Publication Date : 17/04/2015

(54) Title of the invention : BLOCK ABA SILICONE POLYALKYLENE OXIDE COPOLYMERS METHODS OF PREPARATION AND APPLICATIONS FOR EMPLOYING THE SAME

(51) International classification :C08G77/46,A61K8/894,C08L83/12
(31) Priority Document No :13/297931
(32) Priority Date :16/11/2011
(33) Name of priority country :U.S.A.
(86) International Application No :PCT/US2012/065496
Filing Date :16/11/2012
(87) International Publication No :WO 2013/074912
(61) Patent of Addition to Application Number :NA
Filing Date :NA
(62) Divisional to Application Number :NA
Filing Date :NA

(71)**Name of Applicant :**
1)MOMENTIVE PERFORMANCE MATERIALS INC.
Address of Applicant :260 HUDSON RIVER ROAD, WATERFORD, NEW YORK 12188, U.S.A.
(72)**Name of Inventor :**
1)DUSSAUD Anne
2)LU Ning

(57) Abstract :
There is provided herein a linear tri block copolymer having the average formula (1): ABA (1) wherein A is a polyalkyleneoxide unit or an aliphatic modified polyalkyleneoxide unit both of the general formula: RO(CHO)Y and wherein B is an internal polysiloxane unit of the general formula: [X(CHO)R[SiO(R)]Si(R)R(OCHa)X] wherein X and Y are divalent organic groups selected from a secondary amine or a tertiary amine and a ring opened epoxide such that when X is a ring opened epoxide Y is a secondary or tertiary amine and when Y is a ring opened epoxide X is a secondary or tertiary amine. In addition there is provided herein a method of making a linear tri block copolymer having the average formula (1) and personal care and softener compositons comprising the same specifically a hair conditioner.

No. of Pages : 22 No. of Claims : 26

(12) PATENT APPLICATION PUBLICATION
(19) INDIA
(22) Date of filing of Application :07/05/2014
(21) Application No.861/MUMNP/2014 A
(43) Publication Date : 17/04/2015

(54) Title of the invention : BATTERY ASSEMBLY WITH FIXING AND THEFT PROOF FUNCTION

(51) International classification :H01M2/10
(31) Priority Document No :61/556388
(32) Priority Date :07/11/2011
(33) Name of priority country :U.S.A.
(86) International Application No :PCT/CN2012/084210
Filing Date :07/11/2012
(87) International Publication No :WO 2013/067931
(61) Patent of Addition to Application Number :NA
Filing Date :NA
(62) Divisional to Application Number :NA
Filing Date :NA

(71)**Name of Applicant :**
1)ALEEES ECO ARK CO. LTD.
Address of Applicant :No.3 Aly. 256 Sec. 1 Mingsheng N. Rd. Guishan Township Taoyuan County Taiwan 330 China
(72)**Name of Inventor :**
1)WEN Chungwei
2)SHU Chingan

(57) Abstract :
A battery module for an electric vehicle includes an external case, a battery box, a fixing mechanism, and a rotatable pull tab. The external case is fixed in the electric vehicle, and includes an accommodation space and a first fixing part. The battery box is detachably installed in the accommodation space. The fixing mechanism is disposed on the battery box. When the battery box is installed in the accommodation space, the fixing mechanism is engaged with or disengaged from the first fixing part, so that the battery box is selectively in a locked status or an unlocked status. When the battery box is in the locked status, the battery box is securely fixed in the accommodation space. When the battery box is in the unlocked status, the battery box is removable from the accommodation space. The rotatable pull tab is detachably inserted into the fixing mechanism. By rotating the rotatable pull tab, a relationship between the fixing mechanism and the first fixing part is adjustable, so that the battery box is selectively in the locked status or the unlocked status. When the battery box is in the unlocked status, the battery box is removed from the accommodation space in response to an external force exerted on the rotatable pull tab.

No. of Pages : 30 No. of Claims : 14

(12) PATENT APPLICATION PUBLICATION
(19) INDIA
(22) Date of filing of Application :07/05/2014

(21) Application No.862/MUMNP/2014 A
(43) Publication Date : 17/04/2015

(54) Title of the invention : PURINE DERIVATIVES FOR THE TREATMENT OF VIRAL INFECTIONS

(51) International classification	:C07D473/34,A61K31/522,A61P31/12
(31) Priority Document No	:11188511.7
(32) Priority Date	:09/11/2011
(33) Name of priority country	:EPO
(86) International Application No	:PCT/EP2012/072090
Filing Date	:08/11/2012
(87) International Publication No	:WO 2013/068438
(61) Patent of Addition to Application Number	:NA
Filing Date	:NA
(62) Divisional to Application Number	:NA
Filing Date	:NA

(71)**Name of Applicant :**
1)JANSSEN R&D IRELAND
Address of Applicant :Eastgate Village Eastgate Little Island Co Cork, Ireland
(72)**Name of Inventor :**
1)BONFANTI Jean Fran§ois
2)DOUBLET Frdric Marc Maurice
3)EMBRECHTS Werner
4)FORTIN Jr´me Michel Claude
5)MC GOWAN David Craig
6)MULLER Philippe
7)RABOISSON Pierre Jean Marie Bernard

(57) Abstract :
The present invention relates to purine derivatives of formula (I) processes for their preparation pharmaceutical compositions and their use in treating viral infections.

No. of Pages : 69 No. of Claims : 5

(12) PATENT APPLICATION PUBLICATION
(19) INDIA
(22) Date of filing of Application :07/05/2014
(21) Application No.863/MUMNP/2014 A
(43) Publication Date : 17/04/2015

(54) Title of the invention : ABNORMAL DETECTION SYSTEM FOR BATTERY MODULE AND DETECTION METHOD THEREOF

(51) International classification :H02J7/00,B60L3/00,H01M10/42
(31) Priority Document No :61/556386
(32) Priority Date :07/11/2011
(33) Name of priority country :U.S.A.
(86) International Application No :PCT/CN2012/084208
Filing Date :07/11/2012
(87) International Publication No :WO 2013/067930
(61) Patent of Addition to Application Number :NA
Filing Date :NA
(62) Divisional to Application Number :NA
Filing Date :NA

(71)**Name of Applicant :**
1)ALEEES ECO ARK CO. LTD.
Address of Applicant :No.3 Aly. 256 Sec. 1 Mingsheng N. Rd. Guishan Township Taoyuan County Taiwan 330 China
(72)**Name of Inventor :**
1)WEN Chungwei

(57) Abstract :
An abnormal battery detecting system for an electric vehicle includes a power supply unit, a displaying unit, a battery module, a safety protection unit, a detecting unit, and a controlling unit. The displaying unit is connected with the power supply unit. The battery module is used as a main power source of the electric vehicle. The safety protection unit is connected with the battery module and the power supply unit. The detecting unit is connected with the battery module and the power supply unit for detecting the battery module. If the battery module is abnormal, the detecting unit generates at least one feedback signal. The controlling unit is connected with the detecting unit, the power supply unit, the displaying unit and the safety protection unit for receiving the at least one feedback signal. According to a result of comparing the at least one feedback signal with at least one preset default value, the controlling unit generates an abnormal level signal to the displaying unit and the safety protection unit. The safety protection unit is selectively enabled to control an operation of the battery module according to the abnormal level signal. Moreover, a warning message is shown on the displaying unit according to the abnormal level signal.

No. of Pages : 30 No. of Claims : 32

(12) PATENT APPLICATION PUBLICATION
(19) INDIA
(22) Date of filing of Application :15/05/2014
(21) Application No.910/MUMNP/2014 A
(43) Publication Date : 17/04/2015

(54) Title of the invention : APPARATUS AND METHOD FOR PRODUCING ELECTRICITY AND TREATED WATER

(51) International classification :C02F1/14
(31) Priority Document No :1118249.0
(32) Priority Date :23/10/2011
(33) Name of priority country :U.K.
(86) International Application No :PCT/GB2012/052625
Filing Date :23/10/2012
(87) International Publication No :WO 2013/061045
(61) Patent of Addition to Application Number :NA
Filing Date :NA
(62) Divisional to Application Number :NA
Filing Date :NA

(71)**Name of Applicant :**
1)MCWILLIAM Noel
Address of Applicant :9 Romsey Way Benfleet Essex SS7 5TT U.K.
(72)**Name of Inventor :**
1)MCWILLIAM Noel

(57) Abstract :
The present invention provides an integrated system for the combined purpose of electricity generation and water treatment and biofuel production. The configuration combines complementary sub systems whereby outputs from one system are used as inputs to another creating a positive feedback mechanism that significantly increases system efficiency and output. Compensatory mechanisms between system components create a natural hedge in energy and water production against temporal variation in solar insolence levels. Secondary benefits of the invention may include carbon abatement ground water improvements and land regeneration.

No. of Pages : 29 No. of Claims : 53

(12) PATENT APPLICATION PUBLICATION
(19) INDIA
(22) Date of filing of Application :25/04/2013
(21) Application No.1510/MUM/2013 A
(43) Publication Date : 17/04/2015

(54) Title of the invention : STABLE LYOPHILIZED CRYSTALLINE PHARMACEUTICAL COMPOSITIONS OF BENDAMUSTINE HYDROCHLORIDE

(51) International classification	:A61K31/4184, A61K 9/19
(31) Priority Document No	:NA
(32) Priority Date	:NA
(33) Name of priority country	:NA
(86) International Application No	:NA
Filing Date	:NA
(87) International Publication No	: NA
(61) Patent of Addition to Application Number	:NA
Filing Date	:NA
(62) Divisional to Application Number	:NA
Filing Date	:NA

(71)**Name of Applicant :**
1)PANACEA BIOTEC LIMITED
Address of Applicant :PANACEA BIOTEC LTD., PLOT NO. GEN - 72/3, TTC INDUSTRIAL AREA, OPP. MILLENNIUM BUSINESS PARK GATE NO 2, MAHAPE, NAVI MUMBAI 400710, MAHARASHTRA, INDIA.
(72)**Name of Inventor :**
1)JAIN, RAJESH
2)SARABJITH, SING
3)SIVAGAMI, VIPUL BHATT
4)DINESH, DHANVANTRAO SHINDE

(57) Abstract :
The present invention relates to lyophilized pharmaceutical compositions for the treatment of various disease states, especially neoplastic diseases and autoimmune diseases. Particularly, it relates to pharmaceutical formulations comprising nitrogen mustards, particularly the nitrogen mustard bendamustine, e.g., bendamustine hydrochloride.

No. of Pages : 57 No. of Claims : 37

(12) PATENT APPLICATION PUBLICATION
(19) INDIA
(22) Date of filing of Application :06/08/2013

(21) Application No.1510/MUMNP/2013 A
(43) Publication Date : 17/04/2015

(54) Title of the invention : NETWORK COMMUNICATION SYSTEMS AND METHODS

(51) International classification :H04L29/06,H04L29/12,H04L9/32
(31) Priority Document No :61/447495
(32) Priority Date :28/02/2011
(33) Name of priority country :U.S.A.
(86) International Application No :PCT/US2012/026980
Filing Date :28/02/2012
(87) International Publication No :WO 2012/118835
(61) Patent of Addition to Application Number :NA
Filing Date :NA
(62) Divisional to Application Number :NA
Filing Date :NA

(71)**Name of Applicant :**
1)INTERACTIVE SOCIAL INTERNETWORKS LLC
Address of Applicant :7001 Loisdale Road Suite C Springfield Virginia 22150 U.S.A.
(72)**Name of Inventor :**
1)NGUYEN Hien Van

(57) Abstract :
Systems and methods for communicating via a network may employ communication devices capable of functioning in a server mode and a client mode. Communication may begin by activating a server mode for a first communication device. The first communication device in the server mode may receive a message from a second communication device the message comprising an identity associated with the second communication device. The first communication device may retrieve a key associated with the second communication device and verify the identity associated with the second communication device by comparing data in the message from the second communication device with data in the key associated with the second communication device. A client mode may be activated for the first communication device. The first communication device in client mode may send a message to an address associated with the second communication device the message comprising an identity associated with the first communication device.

No. of Pages : 78 No. of Claims : 46

(12) PATENT APPLICATION PUBLICATION
(19) INDIA
(22) Date of filing of Application :08/05/2014
(21) Application No.869/MUMNP/2014 A
(43) Publication Date : 17/04/2015

(54) Title of the invention : AN IMPROVED DRAWER WITH FRONT DOOR PROVIDED WITH LOCKING REGULATING APPARATUS OF SAID FRONT DOOR

(51) International classification :A47B88/00
(31) Priority Document No :MC2011A000058
(32) Priority Date :26/10/2011
(33) Name of priority country :Italy
(86) International Application No :PCT/EP2012/071021
Filing Date :24/10/2012
(87) International Publication No :WO 2013/060709
(61) Patent of Addition to Application Number :NA
Filing Date :NA
(62) Divisional to Application Number :NA
Filing Date :NA

(71)**Name of Applicant :**
1)ESSETRE S.R.L.
Address of Applicant :Via del Trebbio s.n. I 61043 Cagli (PS) Italy
(72)**Name of Inventor :**
1)MENSA Stefano

(57) Abstract :
The present invention relates to a drawer (C) comprising a front door (A) and a locking regulating apparatus of said front door; said apparatus comprising a first locking regulating device (1) of the door (A) with respect to the drawer (C) according to X horizontal axis and Y vertical axis.

No. of Pages : 20 No. of Claims : 10

(12) PATENT APPLICATION PUBLICATION
(19) INDIA
(22) Date of filing of Application :16/05/2014

(21) Application No.913/MUMNP/2014 A
(43) Publication Date : 17/04/2015

(54) Title of the invention : A RECEPTOR MODULE FOR USE IN A DIMENSION MEASURING DEVICE

(51) International classification	:G01B 21/02,G01D18/00
(31) Priority Document No	:2,545,118
(32) Priority Date	:28/04/2006
(33) Name of priority country	:Canada
(86) International Application No	:PCT/CA2007/000660
Filing Date	:18/04/2007
(87) International Publication No	:WO/2007/124568
(61) Patent of Addition to Application Number	:NA
Filing Date	:NA
(62) Divisional to Application Number	:2305/MUMNP/2008
Filed on	:27/10/2008

(71)**Name of Applicant :**
1)GLOBAL SENSOR SYSTEMS INC.
Address of Applicant :400 BRUNEL ROAD, MISSISSAUGA, ONTARIO L4Z 2C2, CANADA.
(72)**Name of Inventor :**
1)COOPER, RICHARD, H.
2)COOPER, GORDON, C.
3)TEAL, TODD
4)HULL, LORNE

(57) Abstract :
A package measurement apparatus comprising three measurement devices, one for each dimension. Each measurement device comprises a plurality of signal receptor modules. Each module comprises a row of signal receptor, and a signal energy source. In a first calibration step, the outputs of each receptor are standardized to reference maximums and minimums. In a second calibration step, calibration sets of receptor outputs are created and recorded. During measurement, a measurement set of receptor outputs is obtained and matched with a calibration set of receptor outputs to determine the dimension of an object.

No. of Pages : 42 No. of Claims : 13

(12) PATENT APPLICATION PUBLICATION
(19) INDIA
(22) Date of filing of Application :16/05/2014
(21) Application No.914/MUMNP/2014 A
(43) Publication Date : 17/04/2015

(54) Title of the invention : ROLE CLEARING METHOD DEVICE AND SYSTEM FOR EMULATOR GAME

(51) International classification :G06F19/00
(31) Priority Document No :201210097117.7
(32) Priority Date :05/04/2012
(33) Name of priority country :China
(86) International Application No :PCT/CN2013/072455
Filing Date :12/03/2013
(87) International Publication No :WO 2013/149537
(61) Patent of Addition to Application Number :NA
Filing Date :NA
(62) Divisional to Application Number :NA
Filing Date :NA

(71)**Name of Applicant :**
1)TENCENT TECHNOLOGY (SHENZHEN) COMPANY LIMITED
Address of Applicant :Room 403 East Block 2 SEG Park Zhenxing Road Futian District Shenzhen Guangdong 518044 China
(72)**Name of Inventor :**
1)WANG Xuxin
2)YAO Jianhui
3)YANG Weichao
4)TANG Wen

(57) Abstract :
Proposed are a role clearing method device and system for an emulator game. The method comprises: when it is judged that an emulator game has a role to be cleared storing current operation information about the game and invoking a role clearing function to clear the role to be cleared; and loading the stored current operation information about the game so as to continue operating the emulator game. The embodiments of the present invention achieve the goal of controlling a game execution flow using data for modifying a game program such as stack data a program pointer etc. by storing the current operation information about the game and invoking the role clearing function and especially ensure that a game player can quit at any time and the remaining players can continue playing the game without being affected.

No. of Pages : 21 No. of Claims : 18

(12) PATENT APPLICATION PUBLICATION
(19) INDIA
(22) Date of filing of Application :09/05/2014
(21) Application No.877/MUMNP/2014 A
(43) Publication Date : 17/04/2015

(54) Title of the invention : TWISTED SENSOR TUBE

(51) International classification :G01K1/08,G01K13/02
(31) Priority Document No :61/565765
(32) Priority Date :01/12/2011
(33) Name of priority country :U.S.A.
(86) International Application No :PCT/US2012/062559
Filing Date :30/10/2012
(87) International Publication No :WO 2013/081758
(61) Patent of Addition to Application Number :NA
Filing Date :NA
(62) Divisional to Application Number :NA
Filing Date :NA

(71)**Name of Applicant :**
1)ROSEMOUNT INC.
Address of Applicant :8200 Market Boulevard Chanhassen MN 55317 U.S.A.
(72)**Name of Inventor :**
1)KLEVEN Lowell A.

(57) Abstract :
A sensor tube (12 120) for protecting a sensor (13) inserted into a moving process fluid is provided. The sensor tube (12 120) includes a process interface section (16) for mounting to a process vessel and an extended section extending from the process interface section (16) to a sealed end (22 404). The extended section includes a twisted section (20) having a longitudinal axis. The process interface section (16) and the extended section define a sensor bore (36) configured to receive a sensor (13) therein. The twisted section (20) has a cross section that includes at least three equally sized walls and wherein the walls form helixes along the longitudinal axis of the twisted section.

No. of Pages : 19 No. of Claims : 20

(12) PATENT APPLICATION PUBLICATION
(19) INDIA
(22) Date of filing of Application :09/05/2014

(21) Application No.878/MUMNP/2014 A
(43) Publication Date : 17/04/2015

(54) Title of the invention : IMPROVED OFFSHORE MARINE ANCHOR

(51) International classification :B63B21/42,B63B21/46
(31) Priority Document No :1117570.0
(32) Priority Date :12/10/2011
(33) Name of priority country :U.K.
(86) International Application No :PCT/GB2012/052333
Filing Date :21/09/2012
(87) International Publication No :WO 2013/054087
(61) Patent of Addition to Application Number :NA
Filing Date :NA
(62) Divisional to Application Number :NA
Filing Date :NA

(71)**Name of Applicant :**
1)BRUPAT LIMITED
Address of Applicant :Anchor House Ballafletcher Road Cronkbourne Douglas Isle of Man IM4 4QE, UK
(72)**Name of Inventor :**
1)BRUCE Peter

(57) Abstract :
A marine anchor is described which has a fluke with a shank pivotably attached thereto wherein the shank is remotely lockable pivotably and subsequently remotely unlockable pivotably with respect to the fluke.

No. of Pages : 28 No. of Claims : 15

(12) PATENT APPLICATION PUBLICATION
(19) INDIA
(22) Date of filing of Application :16/05/2014
(21) Application No.921/MUMNP/2014 A
(43) Publication Date : 17/04/2015

(54) Title of the invention : METHOD AND ARRANGEMENTS RELATING TO FOUNDATION FOR ANTENNA MAST OF WIRELESS COMMUNICATION SYSTEM

(51) International classification	:H01Q1/12,E02D27/42,E04H12/22
(31) Priority Document No	:NA
(32) Priority Date	:NA
(33) Name of priority country	:NA
(86) International Application No	:PCT/SE2011/051387
Filing Date	:18/11/2011
(87) International Publication No	:WO 2013/074007
(61) Patent of Addition to Application Number	:NA
Filing Date	:NA
(62) Divisional to Application Number	:NA
Filing Date	:NA

(71)**Name of Applicant :**
1)TELEFONAKTIEBOLAGET L M ERICSSON (PUBL)
Address of Applicant :S 164 83 Stockholm Sweden
(72)**Name of Inventor :**
1)GUPTA Arvind Kumar

(57) Abstract :
A method of building a foundation a foundation element (2) and a foundation for an antenna mast of a wireless communication system are provided. The foundation comprises at least three foundation elements (2). Each foundation element (2) comprises an elongated body (4). The elongated body (4) comprising a first end (6). At least one bar (16) extends from the elongated body (4) at the first end (6). An attachment arrangement (18) for the antenna mast is provided on the foundation element (2). The at least three foundation elements (2) are arranged to extend substantially symmetrically from a central portion (24) of the foundation (30). A central concrete portion is cast in the central portion (24) of the foundation (30) to join the at least one bar (16) of each of the three foundation elements (2).

No. of Pages : 21 No. of Claims : 11

(12) PATENT APPLICATION PUBLICATION
(19) INDIA
(22) Date of filing of Application :16/05/2014
(21) Application No.922/MUMNP/2014 A
(43) Publication Date : 17/04/2015

(54) Title of the invention : MICROBICIDAL COMPOSITION AND METHOD FOR PREPARING THE SAME

(51) International classification	:A01N65/42,A01N43/16,A01N27/00
(31) Priority Document No	:PI 11051655
(32) Priority Date	:07/12/2011
(33) Name of priority country	:Brazil
(86) International Application No	:PCT/BR2012/000498
Filing Date	:05/12/2012
(87) International Publication No	:WO 2013/082687
(61) Patent of Addition to Application Number	:NA
Filing Date	:NA
(62) Divisional to Application Number	:NA
Filing Date	:NA

(71)**Name of Applicant :**
1)IPEL ITIBANYL PRODUTOS ESPECIAIS LTDA.
Address of Applicant :Rodovia Edgard Maximo Zambotto km 725 Nova Trieste Jarinu SP CEP 13240 000 Brazil
(72)**Name of Inventor :**
1)PICCIRILLO PINTO Walter
2)CARIT JšNIOR Giovanny
3)DA SILVA Heloisa Fernanda

(57) Abstract :
The present invention patent discloses a synergistic microbicidal composition containing essential oils terpene derivatives and bioflavonoids which composition can be used in various industrial processes at a reduced cost and in simplified steps.

No. of Pages : 9 No. of Claims : 5

(12) PATENT APPLICATION PUBLICATION
(19) INDIA
(22) Date of filing of Application :16/05/2014
(21) Application No.923/MUMNP/2014 A
(43) Publication Date : 17/04/2015

(54) Title of the invention : TURBINE

(51) International classification :F01D11/02,F01D5/20,F01D11/08
(31) Priority Document No :2011-272355
(32) Priority Date :13/12/2011
(33) Name of priority country :Japan
(86) International Application No :PCT/JP2012/082206
Filing Date :12/12/2012
(87) International Publication No :WO 2013/089139
(61) Patent of Addition to Application Number :NA
Filing Date :NA
(62) Divisional to Application Number :NA
Filing Date :NA

(71)**Name of Applicant :**
1)MITSUBISHI HITACHI POWER SYSTEMS LTD.
Address of Applicant :3 1 Minatomirai 3 Chome Nishi ku Yokohama shi Kanagawa 2208401 Japan
(72)**Name of Inventor :**
1)KUWAMURA Yoshihiro
2)MATSUMOTO Kazuyuki
3)OYAMA Hiroharu
4)TANAKA Yoshinori
5)UEHARA Hidekazu
6)MACHIDA Yukinori

(57) Abstract :
The present invention provides a turbine which is equipped with blades and a structure for rotating relative to the blades and in which fluid is circulated. The turbine is equipped with: stepped parts provided to either end sections of the blades in the radial direction or areas of the structure which oppose the end sections of the blades in the radial direction; seal fins which extend from one direction towards the stepped parts and which are disposed such that minute gaps are formed between the stepped parts and the seal fins; a flow collision surface which is provided to a side upstream from the seal fins in the circulation direction of the fluid and into which the fluid collides; a protruding part which protrudes from the flow collision surface in the upstream side direction; and an opposing surface which opposes the flow collision surface.

No. of Pages : 63 No. of Claims : 5

(12) PATENT APPLICATION PUBLICATION
(19) INDIA
(22) Date of filing of Application :28/03/2013
(21) Application No.1220/MUM/2013 A
(43) Publication Date : 17/04/2015

(54) Title of the invention : A PROCESS FOR PREPARING ISOLATED IMPURITY OF ATOVAQUONE

(51) International classification	:A61K31/122,C07C46/10, C07C50/32
(31) Priority Document No	:NA
(32) Priority Date	:NA
(33) Name of priority country	:NA
(86) International Application No	:NA
Filing Date	:NA
(87) International Publication No	: NA
(61) Patent of Addition to Application Number	:NA
Filing Date	:NA
(62) Divisional to Application Number	:NA
Filing Date	:NA

(71)**Name of Applicant :**
1)WOCKHARDT LIMITED
Address of Applicant :D-4, MIDC Area, Chikalthana, Aurangabad Maharashtra India
(72)**Name of Inventor :**
1)Chaniyara, Ravi
2)Rafeeq, Mohammad
3)Merwade, Arvind Yekanathsa
4)Deo,Keshav

(57) Abstract :
The present invention relates to a process for preparing isolated impurity of Atovaquone, for example, O-methyl Atovaquone of Formula II, which is useful as reference marker. Formula II

No. of Pages : 10 No. of Claims : 8

(12) PATENT APPLICATION PUBLICATION
(19) INDIA
(22) Date of filing of Application :09/05/2014

(21) Application No.883/MUMNP/2014 A
(43) Publication Date : 17/04/2015

(54) Title of the invention : METHOD AND APPARATUS FOR EFFICIENT PROVIDING OF SCHEDULING INFORMATION

(51) International classification	:H04L12/56, H04W72/12
(31) Priority Document No	:60/691,460
(32) Priority Date	:16/06/2005
(33) Name of priority country	:U.S.A.
(86) International Application No	:PCT/US2006/023097
Filing Date	:13/06/2006
(87) International Publication No	:WO/2006/138339
(61) Patent of Addition to Application Number	:NA
Filing Date	:NA
(62) Divisional to Application Number	:2249/MUMNP/2007
Filed on	:31/12/2007

(71)**Name of Applicant :**
1)QUALCOMM INCORPORATED
Address of Applicant :5775 Morehouse Drive, San Diego, California 92121, United States of America.
(72)**Name of Inventor :**
1)JULIAN, David, Jonathan
2)SUTIVONG, Arak

(57) Abstract :
Systems and methodologies are described that facilitate efficiently providing scheduling information from an access terminal to a base station to enable effectuating scheduling decisions. Access terminals may transmit scheduling information in bifurcated requests. For instance, coarse scheduling information may be transferred utilizing a dedicated out-of-band channel, and fine scheduling information may be transmitted over an in-band channel.

No. of Pages : 45 No. of Claims : 37

(12) PATENT APPLICATION PUBLICATION
(19) INDIA
(22) Date of filing of Application :09/05/2014
(21) Application No.884/MUMNP/2014 A
(43) Publication Date : 17/04/2015

(54) Title of the invention : IMAGE SCALING METHOD AND APPARATUS

(51) International classification :G06T 3/40
(31) Priority Document No :11/409,456
(32) Priority Date :20/04/2006
(33) Name of priority country :U.S.A.
(86) International Application No :PCT/US2007/067020
Filing Date :19/04/2007
(87) International Publication No :WO/2007/124388
(61) Patent of Addition to Application Number :NA
Filing Date :NA
(62) Divisional to Application Number :2343/MUMNP/2008
Filed on :04/11/2008

(71)**Name of Applicant :**
1)QUALCOMM INCORPORATED
Address of Applicant :International IP Administration, 5775 Morehouse Drive, San Diego, California 92121-1714, U.S.A U.S.A.
(72)**Name of Inventor :**
1)LI, Hsiang-Tsun
2)ATANASSOV, Kalin
3)HUNG, Szepo Robert

(57) Abstract :
A method and apparatus for down scaling image data is disclosed. One method controls a phase for an M/N filter, where N represents a number of input samples, and M represents a number of output samples. N is greater than M. Another method may switch between an M/N filter and a phase-controlled M/N filter.

No. of Pages : 30 No. of Claims : 7

(12) PATENT APPLICATION PUBLICATION
(19) INDIA
(22) Date of filing of Application :19/05/2014
(21) Application No.928/MUMNP/2014 A
(43) Publication Date : 17/04/2015

(54) Title of the invention : REFERENCE PICTURE LIST MODIFICATION FOR VIEW SYNTHESIS REFERENCE PICTURES

(51) International classification :H04N7/26
(31) Priority Document No :61/569137
(32) Priority Date :09/12/2011
(33) Name of priority country :U.S.A.
(86) International Application No :PCT/US2012/068230
Filing Date :06/12/2012
(87) International Publication No :WO 2013/086180
(61) Patent of Addition to Application Number :NA
Filing Date :NA
(62) Divisional to Application Number :NA
Filing Date :NA

(71)**Name of Applicant :**
1)QUALCOMM INCORPORATED
Address of Applicant :Attn: International IP Administration 5775 Morehouse Drive San Diego California 92121 1714 U.S.A. U.S.A.
(72)**Name of Inventor :**
1)ZHANG Li
2)CHEN Ying
3)KARCZEWICZ Marta

(57) Abstract :
A video encoder generates a bitstream that includes a reference picture list modification (RPLM) command. The RPLM command belongs to a type of RPLM commands for inserting short term reference pictures into reference picture lists. The RPLM command instructs a video decoder to insert a synthetic reference picture into the reference picture list. The video decoder decodes based at least in part on syntax elements parsed from the bitstream one or more view components and generates based at least in part on the one or more view components the synthetic reference picture. The video decoder modifies in response to the RPLM commands a reference picture list to include the synthetic reference picture. The video decoder may use one or more pictures in the reference picture list as reference pictures to perform inter prediction on one or more video blocks of a picture.

No. of Pages : 50 No. of Claims : 40

(12) PATENT APPLICATION PUBLICATION
(19) INDIA
(22) Date of filing of Application :19/05/2014
(21) Application No.929/MUMNP/2014 A
(43) Publication Date : 17/04/2015

(54) Title of the invention : AN ANTIMICROBIAL MICROEMULSION COMPOSITION

(51) International classification :A01N31/04,A01N25/04,A01P1/00
(31) Priority Document No :3329/MUM/2011
(32) Priority Date :25/11/2011
(33) Name of priority country :India
(86) International Application No :PCT/EP2012/071650
Filing Date :01/11/2012
(87) International Publication No :WO 2013/075921
(61) Patent of Addition to Application Number :NA
Filing Date :NA
(62) Divisional to Application Number :NA
Filing Date :NA

(71)**Name of Applicant :**
1)UNILEVER PLC
Address of Applicant :a company registered in England and Wales under company no. 41424 of Unilever House 100 Victoria Embankment London Greater London EC4Y 0DY U.K.
(72)**Name of Inventor :**
1)MADHAVAN Uma
2)ROUT Deeleep Kumar
3)SAJI Maya Treesa
4)SINHA Ritesh Kumar

(57) Abstract :
The present invention relates to liquid antimicrobial composition particularly to liquid antimicrobial composition in a stable micro emulsion form and a method for disinfecting external surfaces of human or animal body for disinfecting soft and porous substrates like fabric or for disinfecting hard surfaces. The present inventors have found that increasing the amount of lower molecular weight alcohol or electrolytes does not solubilise higher levels of essential oils to form a micro emulsion composition. It is thus a challenge to formulate an aqueous antimicrobial composition that includes high levels of essential oils while still having a transparent/ translucent appearance. This problem has now been solved by the addition of polyphenols with atleast 50% catechins in an aqueous antimicrobial composition having essential oil actives. It was surprisingly found that polyphenols with atleast 50% catechins cause a significant increase instability of aqueous cleansing compositions containing high levels of essential oil actives.

No. of Pages : 19 No. of Claims : 13

(12) PATENT APPLICATION PUBLICATION
(19) INDIA
(22) Date of filing of Application :09/05/2014
(21) Application No.885/MUMNP/2014 A
(43) Publication Date : 17/04/2015

(54) Title of the invention : QUICK LEAK DETECTION ON DIMENSIONALLY STABLE/SLACK PACKAGING WITHOUT THE ADDITION OF TEST GAS

(51) International classification :G01M3/32
(31) Priority Document No :10 2011 086 486.5
(32) Priority Date :16/11/2011
(33) Name of priority country :Germany
(86) International Application No :PCT/EP2012/071133
Filing Date :25/10/2012
(87) International Publication No :WO 2013/072173
(61) Patent of Addition to Application Number :NA
Filing Date :NA
(62) Divisional to Application Number :NA
Filing Date :NA

(71)**Name of Applicant :**
1)INFICON GMBH
Address of Applicant :Bonner Str. 498 50968 Kln Germany
(72)**Name of Inventor :**
1)DECKER Silvio
2)WETZIG Daniel
3)BRUHNS Hjalmar
4)MEBUS Stefan

(57) Abstract :
The invention relates to a device for leak detection on a test specimen 12, having an evacuable test chamber 14 for the test specimen 12. The test chamber is provided with at least one wall area made of a flexible, in particular elastic material. For more precise leakage detection, the progression of the total pressure increase inside the test chamber is measured.

No. of Pages : 22 No. of Claims : 11

(12) PATENT APPLICATION PUBLICATION
(19) INDIA
(22) Date of filing of Application :12/05/2014
(21) Application No.886/MUMNP/2014 A
(43) Publication Date : 17/04/2015

(54) Title of the invention : METHOD FOR INCREASING THE ADDRESS SPACE FOR MOBILE TERMINALS IN A WIRELESS NETWORK

(51) International classification :H04W72/04,H04W8/26
(31) Priority Document No :NA
(32) Priority Date :NA
(33) Name of priority country :NA
(86) International Application No :PCT/SE2011/051496
Filing Date :09/12/2011
(87) International Publication No :WO 2013/085446
(61) Patent of Addition to Application Number :NA
Filing Date :NA
(62) Divisional to Application Number :NA
Filing Date :NA

(71)**Name of Applicant :**
1)TELEFONAKTIEBOLAGET L M ERICSSON (PUBL)
Address of Applicant :S 164 83 Stockholm Sweden
(72)**Name of Inventor :**
1)HOLM Anders
2)AXELSSON Hkan
3)HALLBERG Anders
4)MYRBERG Oskar
5)NILSSON Jonas

(57) Abstract :
A method in a base station subsystem (10) of allocating radio resources to mobile stations (20) in a wireless communication system (1) involves the base station subsystem (10) assigning a respective Temporary Block Flow (TBF) to each mobile station (20) in a cell (40) in the communication system (1) and then assigning to each TBF a Temporary Flow Identity (TFI) at least one Packet Data Channel (PDCH) and an Uplink State Flag (USF) if the TBF is an uplink TBF. The base station subsystem (10) then selects different training sequences from a plurality of available training sequences and assigns a respective different selected training sequence to two or more TBFs wherein these two or more TBFs share the same assigned Temporary Flow Identity (TFI) the same assigned Packet Data Channel (PDCH) and/or the same assigned Uplink State Flag (USF) if the TBF is an uplink TBF.

No. of Pages : 25 No. of Claims : 14

(12) PATENT APPLICATION PUBLICATION
(19) INDIA
(22) Date of filing of Application :19/05/2014
(21) Application No.930/MUMNP/2014 A
(43) Publication Date : 17/04/2015

(54) Title of the invention : LIQUID DETERGENT COMPOSITION

(51) International classification :C11D1/83,C11D3/16,C11D3/43
(31) Priority Document No :3328/MUM/2011
(32) Priority Date :25/11/2011
(33) Name of priority country :India
(86) International Application No:PCT/EP2012/071480
Filing Date :30/10/2012
(87) International Publication No :WO 2013/075913
(61) Patent of Addition to Application Number :NA
Filing Date :NA
(62) Divisional to Application Number :NA
Filing Date :NA

(71)**Name of Applicant :**
1)UNILEVER PLC
Address of Applicant :a company registered in England and Wales under company no. 41424 of Unilever House 100 Victoria Embankment London Greater London EC4Y 0DY U.K..
(72)**Name of Inventor :**
1)ROUT Deeleep Kumar
2)SINHA Ritesh Kumar

(57) Abstract :
The present invention is in the field of stable detergent compositions; in particular liquid crystal ternary lamellar phase detergent compositions for use in laundry and/or household cleaning amongst others. Efficient cleaning of fabric articles especially the removal of soils such as sebum from cuffs and collars remains to be desired. It is an object of the present invention to provide a composition that provides fast dissolution of fatty material based stains. It has been found that a lamellar phase detergent composition comprising a surfactant selected from non ionic and anionic surfactants in a ratio of non ionic:anionic surfactant between5:1 and 1:1; having a fat solubilising oil and water provides an effective solution that removes soils and/or stains of solid or solidified fatty material; is stable at normal storage and washing conditions and may be delivered as a pourable liquid.

No. of Pages : 20 No. of Claims : 6

(12) PATENT APPLICATION PUBLICATION
(19) INDIA
(22) Date of filing of Application :19/05/2014
(21) Application No.931/MUMNP/2014 A
(43) Publication Date : 17/04/2015

(54) Title of the invention : AN ORAL CARE COMPOSITION COMPRISING POLYPHENOL

(51) International classification :A61K8/34,A61K8/49,A61K8/97
(31) Priority Document No :3330/MUM/2011
(32) Priority Date :25/11/2011
(33) Name of priority country :India
(86) International Application No :PCT/EP2012/071649
Filing Date :01/11/2012
(87) International Publication No:WO 2013/075920
(61) Patent of Addition to Application Number :NA
Filing Date :NA
(62) Divisional to Application Number :NA
Filing Date :NA

(71)**Name of Applicant :**
1)UNILEVER PLC
Address of Applicant :Unilever House 100 Victoria Embankment London Greater London EC4Y 0DY U.K.
(72)**Name of Inventor :**
1)BANERJEE Gautam
2)BHONSLE Kishore
3)MADHAVAN Uma
4)NAYAK Kalpana Kamalakar
5)ROUT Deleep Kumar
6)SAJI Maya Treesa
7)UPADHYAYA Smitha Ashok

(57) Abstract :
The present invention relates to oral care composition and a method of disinfecting the oral cavity. We have found that oral care composition having a combination of selective antimicrobial agents and polyphenol provides improved antimicrobial benefits. The combination surprisingly shows synergistic effects that are an order of magnitude better than those shown individually by the antimicrobial agents.

No. of Pages : 21 No. of Claims : 15

(12) PATENT APPLICATION PUBLICATION
(19) INDIA
(22) Date of filing of Application :15/05/2014
(21) Application No.906/MUMNP/2014 A
(43) Publication Date : 17/04/2015

(54) Title of the invention : FAN AND PCB MOUNTING IN FUEL CELL STACK ASSEMBLIES

(51) International classification :H01M8/24,H01M8/04
(31) Priority Document No :1119827.2
(32) Priority Date :17/11/2011
(33) Name of priority country :U.K.
(86) International Application No :PCT/GB2012/052817
Filing Date :13/11/2012
(87) International Publication No :WO 2013/072677
(61) Patent of Addition to Application Number :NA
Filing Date :NA
(62) Divisional to Application Number :NA
Filing Date :NA

(71)**Name of Applicant :**
1)INTELLIGENT ENERGY LIMITED
Address of Applicant :Charnwood Building Holywell Park Ashby Road Loughborough LE11 3GB U.K.
(72)**Name of Inventor :**
1)GRANGE Nathan
2)PINCHIN Raymond

(57) Abstract :
A fuel cell stack assembly (30) comprises a fuel cell stack (31); an air flow plenum chamber (33) disposed on a face (4) of the stack (31) for delivering air to or receiving air from flow channels in the fuel cell stack (31) at least a part of the plenum chamber wall being defined by a printed circuit board the printed circuit board having at least one aperture (37) therein; and a fan (36) mounted to the board adjacent the aperture (37) and configured to force air through the aperture into or out of the plenum chamber. The assembly provides integration of circuit boards essential or supportive to operation of the fuel cell assembly with the air flow plenum for forced ventilation of the fuel cells in the stack.

No. of Pages : 14 No. of Claims : 9

(12) PATENT APPLICATION PUBLICATION
(19) INDIA
(22) Date of filing of Application :14/05/2014
(21) Application No.899/MUMNP/2014 A
(43) Publication Date : 17/04/2015

(54) Title of the invention : COMPOSITION AND PROCESS FOR MERCURY REMOVAL

(51) International classification :B01D53/02,B01D53/64,C10G25/00
(31) Priority Document No :61/576126
(32) Priority Date :15/12/2011
(33) Name of priority country:U.S.A.
(86) International Application No :PCT/US2012/067691
Filing Date :04/12/2012
(87) International Publication No :WO 2013/090050
(61) Patent of Addition to Application Number :NA
Filing Date :NA
(62) Divisional to Application Number :NA
Filing Date :NA

(71)**Name of Applicant :**
1)CLARIANT CORPORATION
Address of Applicant :1600 West Hill Street Louisville Kentucky 40210 U.S.A.
(72)**Name of Inventor :**
1)TURBEVILLE Wayne
2)KORYNTA Greg
3)COLE Todd
4)BRADEN Jeffery L.

(57) Abstract :
A process for removing mercury from a gas or liquid phase wherein the gas or liquid phase containing mercury is placed in contact with a composition comprising a precipitated metal sulfide. The precipitated metal sulfide may be made by the process of combining a metal source sulfide source and modifier to form the precipitated metal sulfide. The metal source may comprise iron cobalt nickel copper zinc zirconium molybdenum silver or gold salts. The metal salt may be selected from metal nitrate metal sulfate metal phosphate metal acetate metal carbonate metal hydroxide metal ammonium carbonate and metal hydroxycarbonate. The sulfide source is selected from hydrogen sulfide (HS) carbonyl sulfide (COS) salts of sulfide (S) salts of hydrosulfide (HS) and salts of polysulfide (Sn). The modifier may be selected from alumina silica aluminosilicate clay zeolites carbon cement titania zirconia.

No. of Pages : 16 No. of Claims : 15

(12) PATENT APPLICATION PUBLICATION
(19) INDIA
(22) Date of filing of Application :12/05/2014
(21) Application No.888/MUMNP/2014 A
(43) Publication Date : 17/04/2015

(54) Title of the invention : COMBINATION OIL RING

(51) International classification :F16J9/06,F02F5/00
(31) Priority Document No :2011-247286
(32) Priority Date :11/11/2011
(33) Name of priority country :Japan
(86) International Application No :PCT/JP2012/070074
Filing Date :07/08/2012
(87) International Publication No :WO 2013/069349
(61) Patent of Addition to Application Number :NA
Filing Date :NA
(62) Divisional to Application Number :NA
Filing Date :NA

(71)**Name of Applicant :**
1)TPR CO., LTD.
Address of Applicant :6 2 Marunouchi 1 chome Chiyoda ku Tokyo 1000005 Japan
(72)**Name of Inventor :**
1)AYUZAWA Noriaki
2)NAKAZAWA Atsushi
3)HAMA Masahide
4)SHIBUYA Toshiyuki

(57) Abstract :
The present invention prevents anchoring between a space expander and a side rail of a combination oil ring. A combination oil ring (10) is provided with a vertical pair of side rails (11 12) and a space expander (13) arranged therebetween the space expander (13) includes a plurality of upper pieces (14) and lower pieces (15) alternately arranged in the peripheral direction and spaced apart in the axial direction and the peripheral direction a coupling piece (16) coupling the adjacent upper pieces (14) and lower pieces (15) and flange sections (17 18) that press against the side rails (11 12) and are formed upright on an inner peripheral side end of the upper pieces (14) and the lower pieces (15) and a through hole (19) is formed in the flange sections (17 18) wherein side rail supporters (14a 15a) which project out in the axial direction are formed at one portion in the peripheral direction of the outer peripheral side end of the upper pieces (14) and the lower pieces (15) of the space expander (13).

No. of Pages : 45 No. of Claims : 12

(12) PATENT APPLICATION PUBLICATION
(19) INDIA
(22) Date of filing of Application :30/04/2013
(21) Application No.1567/MUM/2013 A
(43) Publication Date : 17/04/2015

(54) Title of the invention : IMAGE BLUR CORRECTION APPARATUS, IMAGE BLUR CORRECTION METHOD, AND IMAGING APPARATUS

(51) International classification	:H04N5/232, H04N5/228
(31) Priority Document No	:2012141074
(32) Priority Date	:22/06/2012
(33) Name of priority country	:Japan
(86) International Application No	:NA
Filing Date	:NA
(87) International Publication No	: NA
(61) Patent of Addition to Application Number	:NA
Filing Date	:NA
(62) Divisional to Application Number	:NA
Filing Date	:NA

(71)**Name of Applicant :**
1)SONY CORPORATION
Address of Applicant :1-7-1 Konan, Minato-ku, Tokyo, Japan
(72)**Name of Inventor :**
1)TATSUYUKI NAKAYAMA
2)KOUSUKE TSUCHIHASHI
3)HIDEO TAKAGI

(57) Abstract :
Provided is an image blur correction apparatus including a lens unit having an imaging optical system and an imaging unit configured to generate an image signal of a captured image, a blur detection unit configured to detect blurring occurring in the lens unit, a first correction unit configured to perform image blur correction by turning the lens unit in a first direction and in a second direction, a second correction unit configured to perform image blur correction on a captured image obtained by the imaging optical system, and an image blur correction control unit configured to drive the first correction unit and the second correction unit based on blurring detected by the blur detection unit.

No. of Pages : 73 No. of Claims : 13

(12) PATENT APPLICATION PUBLICATION
(19) INDIA
(22) Date of filing of Application :07/05/2014
(21) Application No.855/MUMNP/2014 A
(43) Publication Date : 17/04/2015

(54) Title of the invention : FAST STORAGE METHOD FOR IMAGE DATA VALUABLE FILE IDENTIFYING METHOD AND IDENTIFYING DEVICE THEREOF

(51) International classification :G06F17/30
(31) Priority Document No :201110380229.9
(32) Priority Date :24/11/2011
(33) Name of priority country :China
(86) International Application No :PCT/CN2012/083584
Filing Date :26/10/2012
(87) International Publication No :WO 2013/075571
(61) Patent of Addition to Application Number :NA
Filing Date :NA
(62) Divisional to Application Number :NA
Filing Date :NA

(71)**Name of Applicant :**
1)GRG BANKING EQUIPMENT CO. LTD.
Address of Applicant :9 Kelin Road Science City Luogang District Guangzhou Guangdong 510663 China
(72)**Name of Inventor :**
1)WANG Rongqiu
2)XIANG Tuowen
3)XU Chaoyang

(57) Abstract :
Disclosed are a valuable file identifying method and an identifying device thereof. The identifying method and the identifying device store image data of a valuable file using a fast storage method for image data. The fast storage method for image data comprises: compulsively converting collected single byte image data into long integer image data; using N data masks which correspond to each other through a bitwise AND operation to extract the long integer image data in such a manner that N points are extracted from M N points in each line and one point is extracted from L points in each column where N is an integer greater than or equal to 2 L and M are all integers greater than or equal to 1; and integrating the data extracted respectively by N data masks through a bitwise OR operation to obtain coded image data and store same. In conclusion the present invention converts single byte image data into long integer image data and extracts multipoint data at one time using a plurality of data masks which correspond to each other reducing the number of operations and achieving fast compressed storage of images.

No. of Pages : 22 No. of Claims : 10

(12) PATENT APPLICATION PUBLICATION
(19) INDIA
(22) Date of filing of Application :07/05/2014
(21) Application No.856/MUMNP/2014 A
(43) Publication Date : 17/04/2015

(54) Title of the invention : ADAPTIVE OVERLAPPED BLOCK MOTION COMPENSATION

(51) International classification :H04N7/26
(31) Priority Document No :61/561783
(32) Priority Date :18/11/2011
(33) Name of priority country :U.S.A.
(86) International Application No :PCT/US2012/065653
Filing Date :16/11/2012
(87) International Publication No :WO 2013/075011
(61) Patent of Addition to Application Number :NA
Filing Date :NA
(62) Divisional to Application Number :NA
Filing Date :NA

(71)**Name of Applicant :**
1)QUALCOMM INCORPORATED
Address of Applicant :ATTN: International IP Administration 5775 Morehouse Drive San Diego California 92121 1714 U.S.A.
(72)**Name of Inventor :**
1)CHIEN Wei Jung
2)CHONG In Suk
3)GUO Liwei
4)KARCZEWICZ Marta

(57) Abstract :
In general techniques are described for performing adaptive overlapped block motion compensation when coding video data. A video coding device configured to code video data may implement the techniques. The video coding device may comprise one or more processors configured to determine an adaptation metric from a region of support for one of a first partition and a second partition of one or more blocks of the video data separated by a partition boundary. The region of support may not be the entire one or more blocks of video data. The one or more processors may further be configured to adapt based on the adaptation metric application of an overlapped block motion compensation process to determine predicted pixel values near the partition boundary for a first predicted block representative of the first partition of the video block.

No. of Pages : 73 No. of Claims : 50

(12) PATENT APPLICATION PUBLICATION
(19) INDIA
(22) Date of filing of Application :07/05/2014
(21) Application No.859/MUMNP/2014 A
(43) Publication Date : 17/04/2015

(54) Title of the invention : TOILET SOAP WITH IMPROVED LATHER

(51) International classification :C11D9/00
(31) Priority Document No :61/563194
(32) Priority Date :23/11/2011
(33) Name of priority country :U.S.A.
(86) International Application No :PCT/EP2012/073008
Filing Date :19/11/2012
(87) International Publication No :WO 2013/076047
(61) Patent of Addition to Application Number :NA
Filing Date :NA
(62) Divisional to Application Number :NA
Filing Date :NA

(71)**Name of Applicant :**
1)UNILEVER PLC
Address of Applicant :Unilever House 100 Victoria Embankment London Greater London EC4Y 0DY U.K.
(72)**Name of Inventor :**
1)ASTOLFI Rafael
2)PEDRO Andr Messias Krell
3)LEOPOLDINO Srgio Roberto

(57) Abstract :
The present invention relates to soap bars having improved lather. Specifically by limiting amounts of myristic acid and keeping specifically defined ratios of sum of C Cfatty acids to Cfatty acid bars having substantially improved lather and unexpectedly obtained.

No. of Pages : 29 No. of Claims : 13

(12) PATENT APPLICATION PUBLICATION
(19) INDIA
(22) Date of filing of Application :07/05/2014
(21) Application No.860/MUMNP/2014 A
(43) Publication Date : 17/04/2015

(54) Title of the invention : AUTHENTICATED GESTURE RECOGNITION

(51) International classification :G06F3/01,G06F3/03
(31) Priority Document No :61/546531
(32) Priority Date :12/10/2011
(33) Name of priority country :U.S.A.
(86) International Application No :PCT/US2012/059804
Filing Date :11/10/2012
(87) International Publication No :WO 2013/055953
(61) Patent of Addition to Application Number :NA
Filing Date :NA
(62) Divisional to Application Number :NA
Filing Date :NA

(71)**Name of Applicant :**
1)QUALCOMM INCORPORATED
Address of Applicant :ATTN: International IP Administration 5775 Morehouse Drive San Diego California 92121 1714 U.S.A. U.S.A.
(72)**Name of Inventor :**
1)KRISHNAMURTHI Govindarajan

(57) Abstract :
Methods apparatuses systems and computer readable media for performing authenticated gesture recognition are presented. According to one or more aspects a gesture performed by a user may be detected. An identity of the user may be determined based on sensor input captured substantially contemporaneously with the detected gesture. Then it may be determined based on the identity of the user that the detected gesture corresponds to at least one command of a plurality of commands. Subsequently the at least one command may be executed. In some arrangements the gesture may correspond to a first command when performed by a first user and the same gesture may correspond to a second command different from the first command when performed by a second user different from the first user.

No. of Pages : 44 No. of Claims : 34

(12) PATENT APPLICATION PUBLICATION
(19) INDIA
(22) Date of filing of Application :15/05/2014
(21) Application No.903/MUMNP/2014 A
(43) Publication Date : 17/04/2015

(54) Title of the invention : INTEGRATING SENSATION FUNCTIONALITIES INTO SOCIAL NETWORKING SERVICES AND APPLICATIONS

(51) International classification :G06Q10/10,G06F3/01,H04L29/08
(31) Priority Document No :61/568071
(32) Priority Date :07/12/2011
(33) Name of priority country :U.S.A.
(86) International Application No :PCT/US2012/067562
Filing Date :03/12/2012
(87) International Publication No :WO 2013/085837
(61) Patent of Addition to Application Number :NA
Filing Date :NA
(62) Divisional to Application Number :NA
Filing Date :NA

(71)**Name of Applicant :**
1)QUALCOMM Incorporated
Address of Applicant :ATTN: International IP Administration 5775 Morehouse Drive San Diego California 92121 1714 U.S.A. U.S.A.
(72)**Name of Inventor :**
1)DAS Saumitra Mohan
2)SRIDHARA Vinay
3)SHEYNBLAT Leonid

(57) Abstract :
Methods apparatuses systems and computer readable media for integrating sensation functionalities into social networking services and/or applications are presented. According to one or more aspects a computing device may receive a status update associated with a social networking service and the status update may include haptic data. Subsequently the computing device may cause haptic feedback to be provided to at least one user of the social networking service based at least in part on the haptic data and the at least one user s relationship with a sender of the status update within the social networking service. In at least one arrangement first haptic feedback is provided to the user if the user is within a first group of users and second haptic feedback different from the first haptic feedback is provided to the user if the user is within a second group of users different from the first group of users.

No. of Pages : 59 No. of Claims : 40

(12) PATENT APPLICATION PUBLICATION
(19) INDIA
(22) Date of filing of Application :15/05/2014
(21) Application No.904/MUMNP/2014 A
(43) Publication Date : 17/04/2015

(54) Title of the invention : ASSOCIATION PRODUCT OF AMINO FUNCTIONAL HYDROPHOBIC POLYMERS WITH HYDROPHILIC POLYMERS CONTAINING ACID GROUPS METHODS OF PREPARATION AND APPLICATIONS FOR EMPLOYING SAME

(51) International classification :C08L33/02,C08L33/14,C08L1/08
(31) Priority Document No :13/297926
(32) Priority Date :16/11/2011
(33) Name of priority country :U.S.A.
(86) International Application No :PCT/US2012/065526
Filing Date :16/11/2012
(87) International Publication No :WO 2013/074931
(61) Patent of Addition to Application Number :NA
Filing Date :NA
(62) Divisional to Application Number :NA
Filing Date :NA

(71)**Name of Applicant :**
1)MOMENTIVE PERFORMANCE MATERIALS INC.
Address of Applicant :260 HUDSON RIVER ROAD, WATERFORD, NEW YORK 12188, U.S.A
(72)**Name of Inventor :**
1)DUSSAUD Anne
2)LU Ning

(57) Abstract :
There is provided herein a composition comprising the non covalent bonded reaction product of a hydrophilic polymer containing an acid functional group and a hydrophobic polymer which contains an amine group bound directly to the hydrophobic polymer backbone; and optionally a diluent as well as a process of making such a composition.

No. of Pages : 48 No. of Claims : 20

(12) PATENT APPLICATION PUBLICATION
(19) INDIA
(22) Date of filing of Application :14/05/2014
(21) Application No.900/MUMNP/2014 A
(43) Publication Date : 17/04/2015

(54) Title of the invention : METHOD AND APPARATUS FOR DETERMINING A CONTEXT MODEL FOR TRANSFORM COEFFICIENT LEVEL ENTROPY ENCODING AND DECODING

(51) International classification :H04N7/26
(31) Priority Document No :61/553668
(32) Priority Date :31/10/2011
(33) Name of priority country :U.S.A.
(86) International Application No :PCT/KR2012/009074
Filing Date :31/10/2012
(87) International Publication No :WO 2013/066051
(61) Patent of Addition to Application Number :NA
Filing Date :NA
(62) Divisional to Application Number :NA
Filing Date :NA

(71)**Name of Applicant :**
1)SAMSUNG ELECTRONICS CO. LTD.
Address of Applicant :129 Samsung ro Yeongtong gu Suwon si Gyeonggi do 443 742 Republic of Korea
(72)**Name of Inventor :**
1)PIAO Yin ji
2)MIN Jung hye

(57) Abstract :
Disclosed are a method and apparatus for determining a context model for transform coefficient entropy encoding and decoding. In the method and apparatus for determining a context model a context set index (ctxset) is acquired on the basis of color component information in transform units the current subset position and whether or not a valid transform coefficient having a value greater than a first critical value exists in the preceding subset and a context offset (c1) is acquired on the basis of the length of a preceding continuous transform coefficient having a value of 1. Also a context index (ctxidx) is determined for entropy encoding and decoding of a first critical value flag on the basis of the acquired context set index and the context offset.

No. of Pages : 67 No. of Claims : 15

(12) PATENT APPLICATION PUBLICATION
(19) INDIA
(22) Date of filing of Application :14/05/2014
(21) Application No.901/MUMNP/2014 A
(43) Publication Date : 17/04/2015

(54) Title of the invention : COMPOSITION AND PROCESS FOR MERCURY REMOVAL

(51) International classification :B01D53/02,B01D53/64,C10G25/00
(31) Priority Document No :61/576126
(32) Priority Date :15/12/2011
(33) Name of priority country:U.S.A.
(86) International Application No :PCT/US2012/067683
Filing Date :04/12/2012
(87) International Publication No :WO 2013/090048
(61) Patent of Addition to Application Number :NA
Filing Date :NA
(62) Divisional to Application Number :NA
Filing Date :NA

(71)**Name of Applicant :**
1)CLARIANT CORPORATION
Address of Applicant :1600 West Hill Street Louisville Kentucky 40210 U.S.A..
(72)**Name of Inventor :**
1)TURBEVILLE Wayne
2)KORYNTA Greg
3)COLE Todd
4)BRADEN Jeffery L.

(57) Abstract :
A process for removing mercury from a gas or liquid phase wherein the gas or liquid phase containing mercury is placed in contact with a composition comprising a precipitated metal sulfide. The precipitated metal sulfide may be made by the process of combining a metal source sulfide source and modifier to form the precipitated metal sulfide. The metal source may comprise iron cobalt nickel copper zinc zirconium molybdenum silver or gold salts. The metal salt may be selected from metal nitrate metal sulfate metal phosphate metal acetate metal carbonate metal hydroxide metal ammonium carbonate and metal hydroxycarbonate. The sulfide source is selected from hydrogen sulfide (HS) carbonyl sulfide (COS) salts of sulfide (S) salts of hydrosulfide (HS) and salts of polysulfide (S). The modifier may be selected from alumina silica aluminosilicate clay zeolites carbon cement titania zirconia.

No. of Pages : 17 No. of Claims : 14

(12) PATENT APPLICATION PUBLICATION
(19) INDIA
(22) Date of filing of Application :15/05/2014

(21) Application No.902/MUMNP/2014 A
(43) Publication Date : 17/04/2015

(54) Title of the invention : SYSTEM AND METHOD OF SENDING DATA VIA A PLURALITY OF DATA LINES ON A BUS

(51) International classification :G06F13/42
(31) Priority Document No :61/576840
(32) Priority Date :16/12/2011
(33) Name of priority country :U.S.A.
(86) International Application No :PCT/US2012/069800
Filing Date :14/12/2012
(87) International Publication No :WO 2013/090752
(61) Patent of Addition to Application Number :NA
Filing Date :NA
(62) Divisional to Application Number :NA
Filing Date :NA

(71)**Name of Applicant :**
1)QUALCOMM INCORPORATED
Address of Applicant :ATTN: International IP Administration 5775 Morehouse Drive San Diego CA 92121 1714 U.S.A..
(72)**Name of Inventor :**
1)GRUBER Hans Georg
2)HARIHARAN Magesh
3)ARCEO Julio
4)MOHAN Suren
5)BALATSOS Aris

(57) Abstract :
A method includes sending data from a first serial low power inter chip media bus (SLIMbus) component to a second SLIMbus component. The method further includes sending the data via at least a first SLIMbus data line of a plurality of SLIMbus data lines.

No. of Pages : 48 No. of Claims : 40

(12) PATENT APPLICATION PUBLICATION
(19) INDIA
(22) Date of filing of Application :08/05/2014
(21) Application No.872/MUMNP/2014 A
(43) Publication Date : 17/04/2015

(54) Title of the invention : CHEMICAL INJECTION CONTROL METHOD AND CHEMICAL INJECTION CONTROLLER

(51) International classification :C02F1/00,C02F1/28,C02F1/52
(31) Priority Document No :2011-236741
(32) Priority Date :28/10/2011
(33) Name of priority country :Japan
(86) International Application No :PCT/JP2012/077473
Filing Date :24/10/2012
(87) International Publication No :WO 2013/062003
(61) Patent of Addition to Application Number :NA
Filing Date :NA
(62) Divisional to Application Number :NA
Filing Date :NA

(71)**Name of Applicant :**
1)ASAHI KASEI CHEMICALS CORPORATION
Address of Applicant :1 105 Kanda Jinbocho Chiyoda ku Tokyo 1018101 Japan
(72)**Name of Inventor :**
1)KONISHI Takahiro
2)OKUBO Shinji
3)HATTORI Kei
4)GOJO Yutaka

(57) Abstract :
A chemical injection controller (1) corrects the chemical injection percentage based on the difference between the measurement of the water quality index of treated water by operating a chemical injection pump based on a preset chemical injection percentage and the target value of the water quality index and calculates the optimal chemical injection percentage. Next the optimal chemical injection percentage is set as the target variable and at least one water quality index of raw water is set as the control variable then multiple regression analysis is conducted to derive the equation for calculating the basic chemical injection percentage corresponding to the water quality index. Next the measured value of the water quality index of raw water is given to the calculation equation to calculate the basic chemical injection percentage corresponding to the water quality index. Next the basic chemical injection percentage is corrected based on the measured value of the water quality index of the treated water by operating the chemical injection pump based on the basic chemical injection percentage and a new chemical injection percentage is calculated and output as the controllable factor of the chemical injection pump and given to the calculation of the optimal chemical injection percentage.

No. of Pages : 63 No. of Claims : 8

(12) PATENT APPLICATION PUBLICATION
(19) INDIA
(22) Date of filing of Application :16/05/2014
(21) Application No.920/MUMNP/2014 A
(43) Publication Date : 17/04/2015

(54) Title of the invention : PAPER TYPE DETECTION DEVICE AND DETECTION METHOD

(51) International classification :B65H7/12,B65H43/04,G07D7/12
(31) Priority Document No :201110406846.1
(32) Priority Date :08/12/2011
(33) Name of priority country :China
(86) International Application No :PCT/CN2012/083604
Filing Date :26/10/2012
(87) International Publication No :WO 2013/082979
(61) Patent of Addition to Application Number :NA
Filing Date :NA
(62) Divisional to Application Number :NA
Filing Date :NA

(71)**Name of Applicant :**
1)GRG BANKING EQUIPMENT CO. LTD.
Address of Applicant :9 Kelin Road Science City Luogang District Guangzhou Guangdong 510663 China
(72)**Name of Inventor :**
1)LIAO Junqing

(57) Abstract :
A paper type detection device (1) comprises a sensor unit (10) a storage unit (20) and a control unit (30). The sensor unit(10) is used for detecting a transmission state of a paper (100) according to a fixed clock period and carrying out binaryzation on detected signals to indicate the presence absence state of the paper (100). The storage unit (20) is used for acquiring the signals detected by the sensor unit (10) acquiring paper (100) information in the signals and storing the paper (100) information in sequence. The control unit (30) comprises a first state counter and a second state counter. The control unit (30) controls the two state counters for carrying out zero clearing and starting operations for counting in conjunction with the sensor unit (10) in order to eliminate the interference in a predetermined threshold value so as to eliminate the interference brought by the paper (100) in a poor state and make sure that the information recording sequence of paper (100) is consistent with the transmission sequence of the paper (100). Also disclosed is a paper type detection method.

No. of Pages : 32 No. of Claims : 10

(12) PATENT APPLICATION PUBLICATION
(19) INDIA
(22) Date of filing of Application :17/05/2014
(21) Application No.924/MUMNP/2014 A
(43) Publication Date : 17/04/2015

(54) Title of the invention : METHOD AND DEVICE FOR DEGASSING LIQUID SULPHUR

(51) International classification :C01B17/02
(31) Priority Document No :11290609.4
(32) Priority Date :23/12/2011
(33) Name of priority country :EPO
(86) International Application No :PCT/EP2012/071808
Filing Date :05/11/2012
(87) International Publication No :WO 2013/091972
(61) Patent of Addition to Application Number :NA
Filing Date :NA
(62) Divisional to Application Number :NA
Filing Date :NA

(71)**Name of Applicant :**
1)AIR LIQUIDE GLOBAL E&C SOLUTIONS GERMANY GMBH
Address of Applicant :Olof Palme Strasse 35 60439 Frankfurt am Main Germany
2)NGD CONSULT
(72)**Name of Inventor :**
1)NOUGAYREDE Jean
2)NEHB Wolfgang
3)JNGST Eckhard

(57) Abstract :
In the degassing of liquid sulphur in a container a first region of the container is flooded with liquid sulphur and a second region of the container is flooded with a gas. A gas stream is injected into the first region. In addition liquid sulphur is sprayed into the second region.

No. of Pages : 28 No. of Claims : 12

(12) PATENT APPLICATION PUBLICATION
(19) INDIA
(22) Date of filing of Application :17/05/2014
(21) Application No.925/MUMNP/2014 A
(43) Publication Date : 17/04/2015

(54) Title of the invention : IMPROVEMENT TO INSTALLATION FOR REMOVING POLLUTANT MATERIALS AND/OR SUBSTANCES FROM WATERCOURSES

(51) International classification :C02F1/52,C02F9/00,C02F1/24
(31) Priority Document No :PI11050055
(32) Priority Date :23/11/2011
(33) Name of priority country :Brazil
(86) International Application No :PCT/BR2012/000464
Filing Date :21/11/2012
(87) International Publication No :WO 2013/075194
(61) Patent of Addition to Application Number :NA
Filing Date :NA
(62) Divisional to Application Number :NA
Filing Date :NA

(71)**Name of Applicant :**
1)GOMES DE OLIVEIRA Jo£o Carlos
Address of Applicant :Al. Granada 634 Alphaville Barueri S£o Paulo 06473 065 Brazil Brazil
2)GOMES DE OLIVEIRA NETTO Proc³pio
3)GOMES DE OLIVEIRA Felipe
(72)**Name of Inventor :**
1)GOMES DE OLIVEIRA Jo£o Carlos
2)GOMES DE OLIVEIRA NETTO Proc³pio
3)GOMES DE OLIVEIRA Felipe

(57) Abstract :
An improvement to an installation for removing pollutant materials and/or substances from watercourses is applied to an installation of the type comprising: the implantation of a sandbox at the bottom of a section of a watercourse followed by a floating garbage enclosure arranged substantially across the water course. A certain distance downstream of the garbage enclosure a metallic structure is suspended across the watercourse on which automatically actuatable selective injection curtains are mounted at a certain distance from each other with intercalated homogenising diffusers. These curtains inject coagulants and polymers into the watercourse to be treated. In front of these curtains a micro air bubble releasing step causes the aggregated particles to float creating a surface agglomeration of floated material on the watercourse starting from this flotation section and the floated material is guided by flexible longitudinal barriers formed by synthetic membranes to a transverse array of dredging modules that extends across the watercourse facilitating the concentration of the floated material and the removal thereof. This improvement consists in that all the equipment (3 4 7) originally mounted across the watercourse can be partially or totally removed from across the watercourse allowing the watercourse bed to be entirely and/or partially deobstructed.

No. of Pages : 27 No. of Claims : 8

(12) PATENT APPLICATION PUBLICATION
(19) INDIA
(22) Date of filing of Application :09/05/2014
(21) Application No.875/MUMNP/2014 A
(43) Publication Date : 17/04/2015

(54) Title of the invention : IMPROVED METHOD FOR PRODUCTION OF F 18 LABELED A LIGANDS

(51) International classification :C07B59/00,C07D213/18
(31) Priority Document No :11075236.7
(32) Priority Date :19/10/2011
(33) Name of priority country :EPO
(86) International Application No :PCT/EP2012/070669
Filing Date :18/10/2012
(87) International Publication No :WO 2013/057199
(61) Patent of Addition to Application Number :NA
Filing Date :NA
(62) Divisional to Application Number :NA
Filing Date :NA

(71)**Name of Applicant :**
1)PIRAMAL IMAGING SA
Address of Applicant :Route de lEcole 13 CH 1753 Matran, Switzerland
(72)**Name of Inventor :**
1)MEIER Franz
2)GRAHAM Keith

(57) Abstract :
This invention relates to improved methods which provide access [F 18]fluoropegylated (aryl/heteroaryl vinyl) phenyl methyl amine derivatives.

No. of Pages : 47 No. of Claims : 17

(12) PATENT APPLICATION PUBLICATION
(19) INDIA
(22) Date of filing of Application :09/05/2014
(21) Application No.876/MUMNP/2014 A
(43) Publication Date : 17/04/2015

(54) Title of the invention : SENSOR AUTO CALIBRATION

(51) International classification :G06F1/32,G01P21/00
(31) Priority Document No :61/559030
(32) Priority Date :11/11/2011
(33) Name of priority country :U.S.A.
(86) International Application No :PCT/US2012/064710
Filing Date :12/11/2012
(87) International Publication No :WO 2013/071257
(61) Patent of Addition to Application Number :NA
Filing Date :NA
(62) Divisional to Application Number :NA
Filing Date :NA

(71)**Name of Applicant :**
1)QUALCOMM INCORPORATED
Address of Applicant :Att: International IP Administration 5775 Morehouse Drive San Diego California 92121 1714 U.S.A.
(72)**Name of Inventor :**
1)AHUJA Disha
2)KULIK Victor
3)PUIG Carlos M.
4)DESAI Ashish Nagesh

(57) Abstract :
Aspects of the disclosure relate to computing technologies. In particular aspects of the disclosure relate to mobile computing device technologies such as systems methods apparatuses and computer readable media for scheduling an execution of a task such as a non real time non latency sensitive background task on a computing device for improving calibration data by increasing the diversity of orientations used for generating the calibration data and for improving the calibration data by taking into account the effects of change in temperature on motion sensors.

No. of Pages : 120 No. of Claims : 107

(12) PATENT APPLICATION PUBLICATION
(19) INDIA
(22) Date of filing of Application :16/05/2014
(21) Application No.919/MUMNP/2014 A
(43) Publication Date : 17/04/2015

(54) Title of the invention : ISOLATED STEREOISOMERIC FORMS OF (S) 2-N (3-O-(PROPAN 2-OL) -1-PROPYL-4-HYDROXYBENZENE) -3-PHENYLPROPYLAMIDE

(51) International classification	:C07C233/73,A61K31/165,A61P25/04
(31) Priority Document No	:61/568219
(32) Priority Date	:08/12/2011
(33) Name of priority country	:U.S.A.
(86) International Application No	:PCT/IL2012/050512
Filing Date	:06/12/2012
(87) International Publication No	:WO 2013/084238
(61) Patent of Addition to Application Number	:NA
Filing Date	:NA
(62) Divisional to Application Number	:NA
Filing Date	:NA

(71)**Name of Applicant :**
1)NOVAREMED LTD.
Address of Applicant :9 Bareket St. 49250 Petah Tiqwa Israel
(72)**Name of Inventor :**
1)KAPLAN Eliahu

(57) Abstract :
The present invention relates to isolated stereoisomeric forms of the compound (S)2-N(3- 0-(propan 2-ol)-l-propyl-4-hydroxybenzene)-3-phenylpropylamide. Specifically, the present invention relates to the use of (S)2-N(3-0-((S)propan 2-ol)-l-propyl-4- hydroxybenzene)-3-phenylpropylamide in the treatment of pain.

No. of Pages : 49 No. of Claims : 23

(12) PATENT APPLICATION PUBLICATION
(19) INDIA
(22) Date of filing of Application :19/05/2014
(21) Application No.932/MUMNP/2014 A
(43) Publication Date : 17/04/2015

(54) Title of the invention : A MEAL INTENDED FOR HUMAN CONSUMPTION

(51) International classification :A23L1/29,A23L1/30,A23L1/308
(31) Priority Document No :11191182.2
(32) Priority Date :29/11/2011
(33) Name of priority country :EPO
(86) International Application No :PCT/EP2012/073846
Filing Date :28/11/2012
(87) International Publication No :WO 2013/079536
(61) Patent of Addition to Application Number :NA
Filing Date :NA
(62) Divisional to Application Number :NA
Filing Date :NA

(71)**Name of Applicant :**
1)UNILEVER PLC
Address of Applicant :Unilever House 100 Victoria Embankment London Greater London EC4Y 0DY U.K.
(72)**Name of Inventor :**
1)BERRY Mark John
2)BLIGH Heather Frances Jennifer
3)FOWLER Mark Ian
4)HUNTER Karl John
5)MACAULAY Katrina

(57) Abstract :
This invention relates to a plurality of compositions for dietary health management and its use in the prevention or treatment of cardiovascular disease or type 2 diabetes and also in the prevention and/or management of obesity and generally in weight management and loss. Thus a meal intended for human consumption is provided the meal comprising: (a) 250 650 kilocalories (1045 4180 kiloJoules); (b) 10 50 preferably 20 50 more preferably 30 50 g fibre; (c) 10 50 preferably 10 30 more preferably 10 20 g protein; (d) 0 to 5 preferably less than 3 g starch; and (e) 0 to 2 preferably 0 to 1 most preferably 0 to 0.5 g lactose; (f) at least 20 preferably at least 30 most preferably at least 40 mg of any one flavonoid aglycone; and (g) at least 30 preferably at least 40 most preferably at least 50 mg of any one flavonoid glucoside; wherein the meal comprises 75 1000 mg of total flavonoid aglycone and flavonoid glucoside wherein the meal comprises no more than 250 mg of any one flavonoid aglycone wherein the meal comprises no more than 250 mg of any one flavonoid glucoside.

No. of Pages : 47 No. of Claims : 10

(12) PATENT APPLICATION PUBLICATION
(19) INDIA
(22) Date of filing of Application :16/05/2014
(21) Application No.916/MUMNP/2014 A
(43) Publication Date : 17/04/2015

(54) Title of the invention : SELF DIRECTING STIMULATION ELECTRODE

(51) International classification :A61N1/02
(31) Priority Document No :61/627839
(32) Priority Date :19/10/2011
(33) Name of priority country :U.S.A.
(86) International Application No :PCT/US2012/061168
Filing Date :19/10/2012
(87) International Publication No :WO 2013/059704
(61) Patent of Addition to Application Number :NA
Filing Date :NA
(62) Divisional to Application Number :NA
Filing Date :NA

(71)**Name of Applicant :**
1)NEURO RESOURCE GROUP INC.
Address of Applicant :1100 Jupiter Ste 190 Plano TX 75074 U.S.A.
(72)**Name of Inventor :**
1)TURNER David O.
2)MAGEE Paul J.
3)BYARS Gary L.
4)PAYNE Charles H.

(57) Abstract :
A neurostimulation device is provided. The device has first and second physical electrode elements that cooperate to provide a plurality of virtual electrode pairs. The spacing between the physical elements as well as the relative surface areas between the respective portions comprising the virtual pairs is controlled to provide self selecting and/or self directing treatment capabilities.

No. of Pages : 39 No. of Claims : 14

(12) PATENT APPLICATION PUBLICATION
(19) INDIA
(22) Date of filing of Application :16/05/2014
(21) Application No.917/MUMNP/2014 A
(43) Publication Date : 17/04/2015

(54) Title of the invention : METHODS AND DEVICES FOR TREATING HYPERTENSION

(51) International classification :A61F7/00
(31) Priority Document No :61/549007
(32) Priority Date :19/10/2011
(33) Name of priority country :U.S.A.
(86) International Application No :PCT/US2012/061118
Filing Date :19/10/2012
(87) International Publication No :WO 2013/059658
(61) Patent of Addition to Application Number :NA
Filing Date :NA
(62) Divisional to Application Number :NA
Filing Date :NA

(71)**Name of Applicant :**
1)SYMPARA MEDICAL INC.
Address of Applicant :2800 3rd Street San Francisco CA 94107 U.S.A.
(72)**Name of Inventor :**
1)EHRENREICH Kevin Joe
2)VON OEPEN Randolf
3)MCCRYSTLE Kelly Justin

(57) Abstract :
Devices systems and methods are described which control blood pressure and nervous system activity by stimulating baroreceptors. By selectively and controllably activating baroreceptors and/or nerves the present invention reduces blood pressure and alters the sympathetic nervous system; thereby minimizing deleterious effects on the heart vasculature and other organs and tissues. A baroreceptor activation device or other sensory activation device is positioned near a dermal bone to provide the treatment.

No. of Pages : 79 No. of Claims : 21

(12) PATENT APPLICATION PUBLICATION
(19) INDIA
(22) Date of filing of Application :09/05/2014
(21) Application No.882/MUMNP/2014 A
(43) Publication Date : 17/04/2015

(54) Title of the invention : INFORMATION PROCESSING DEVICE INFORMATION PROCESSING METHOD INFORMATION PROVISION DEVICE AND INFORMATION PROVISION SYSTEM

(51) International classification :H04N7/173,G06F17/30,G10L19/00
(31) Priority Document No :2011-250718
(32) Priority Date :16/11/2011
(33) Name of priority country :Japan
(86) International Application No :PCT/JP2012/071567
Filing Date :27/08/2012
(87) International Publication No :WO 2013/073250
(61) Patent of Addition to Application Number :NA
Filing Date :NA
(62) Divisional to Application Number :NA
Filing Date :NA

(71)**Name of Applicant :**
1)SONY CORPORATION
Address of Applicant :1 7 1 Konan Minato Ku Tokyo 1080075 Japan
(72)**Name of Inventor :**
1)NAKAMURA Hitoshi

(57) Abstract :
The purpose of the invention is to appropriately provide content information on the basis of feature point information extracted from the audio information of the content. Even when secondary audio is being listened to on a client device (140) the client device (140) extracts feature point information from only the main audio and sends an inquiry to an information provision server (150) so an ACR service can be implemented by the information provision server (150) which does not readily have secondary audio feature point information. In addition in the event of delivery of content having main audio and multiple sets of audio information there is no need for the information provision server (150) side to prepare secondary audio feature point information so the capacity of a database does not need to be increased.

No. of Pages : 34 No. of Claims : 11

(12) PATENT APPLICATION PUBLICATION
(19) INDIA
(22) Date of filing of Application :19/05/2014
(21) Application No.926/MUMNP/2014 A
(43) Publication Date : 17/04/2015

(54) Title of the invention : METHOD FOR INTER PREDICTION AND DEVICE THEREFOR AND METHOD FOR MOTION COMPENSATION AND DEVICE THEREFOR

(51) International classification :H04N7/36
(31) Priority Document No :61/552698
(32) Priority Date :28/10/2011
(33) Name of priority country :U.S.A.
(86) International Application No :PCT/KR2012/008946
Filing Date :29/10/2012
(87) International Publication No :WO 2013/062391
(61) Patent of Addition to Application Number :NA
Filing Date :NA
(62) Divisional to Application Number :NA
Filing Date :NA

(71)**Name of Applicant :**
1)SAMSUNG ELECTRONICS CO. LTD.
Address of Applicant :129 Samsung ro Yeongtong gu Suwon si Gyeonggi do 443 742 Republic of Korea
(72)**Name of Inventor :**
1)PARK Young o
2)KIM Il koo
3)KIM Chan yul
4)CHOI Kwang pyo

(57) Abstract :
The present invention relates to a method for inter prediction and a method for motion compensation. Disclosed is a method for inter prediction wherein: inter prediction for a current image is performed by using a long term reference image stored in a decoded picture buffer (DPB); a motion vector and residual data of the current image generated by the inter prediction are determined; and picture order count (POC) information of the long term reference image is partitioned into most significant bits (MSB) information and least significant bits (LSB) information so that the LSB information is determined as a long term reference index which indicates the long term reference image.

No. of Pages : 86 No. of Claims : 15

(12) PATENT APPLICATION PUBLICATION
(19) INDIA
(22) Date of filing of Application :13/05/2014
(21) Application No.895/MUMNP/2014 A
(43) Publication Date : 17/04/2015

(54) Title of the invention : COMBUSTION CHAMBER OF AN INTERNAL COMBUSTION CHAMBER METHOD FOR IGNITING A FUEL AIR MIXTURE AND INTERNAL COMBUSTION CHAMBER

(51) International classification	:F02P13/00,F02F1/24,F02B19/10
(31) Priority Document No	:10 2011 116 371.2
(32) Priority Date	:14/10/2011
(33) Name of priority country	:Germany
(86) International Application No	:PCT/IB2012/002232
Filing Date	:15/10/2012
(87) International Publication No	:WO 2013/054187
(61) Patent of Addition to Application Number	:NA
Filing Date	:NA
(62) Divisional to Application Number	:NA
Filing Date	:NA

(71)**Name of Applicant :**
1)BORISSOVSKIY Vladimir
Address of Applicant :Philipp Rosenthal Str.9 04103 Leipzig Germany
(72)**Name of Inventor :**
1)BORISSOVSKIY Vladimir

(57) Abstract :
The invention relates to a combustion chamber for internal combustion engines to a method for igniting a fuel air mixture in a combustion chamber and an internal combustion engine. Said combustion chamber is characterised in that it comprises a piston (2) having a piston head surface and a cylinder head (1) having a cylinder head surface and a combustion chamber axis (7). At least one recess (3 4) is provided in the piston head surface and/or in the cylinder head surface and an ignition device (6) is arranged longitudinally in relation to the combustion chamber axis (7) said igniting device (6) being designed to produce a linear ignition longitudinally to the combustion chamber axis (7).

No. of Pages : 22 No. of Claims : 11

(12) PATENT APPLICATION PUBLICATION
(19) INDIA
(22) Date of filing of Application :23/04/2013
(21) Application No.1488/MUM/2013 A
(43) Publication Date : 17/04/2015

(54) Title of the invention : ROLLING MILL EQUIPPED WITH WORK ROLL SHIFT FUNCTION

(51) International classification	:B21B37/40, B21B13/14
(31) Priority Document No	:2012-099722
(32) Priority Date	:25/04/2012
(33) Name of priority country	:Japan
(86) International Application No	:NA
Filing Date	:NA
(87) International Publication No	: NA
(61) Patent of Addition to Application Number	:NA
Filing Date	:NA
(62) Divisional to Application Number	:NA
Filing Date	:NA

(71)**Name of Applicant :**
1)MITSUBISHI-HITACHI METALS MACHINERY, INC.
Address of Applicant :34-6, SHIBA 5-CHOME, MINATO-KU, TOKYO 1080014, JAPAN
(72)**Name of Inventor :**
1)TAKASHI NORIKURA

(57) Abstract :
A rolling mill equipped with a work roll shift function is provided that can improve yield and realize stable rolling with a simple means. In a six-high rolling mill or a four-high rolling mill a pair of upper and lower work rolls (2) are provided with tapered portions (2b) in upper and lower positions in point symmetry, shift cylinders (13) are provided for shifting the pair of upper and lower work rolls (2) in roll axial directions and a strip widthwise end position detector (32) is provided for detecting strip widthwise ends of a metal strip (1), and a controller (35) is further provided for performing shift control of the shift cylinders (13) so as to cause taper start positions (2a) of the tapered portions (2b) of the pair of upper and lower work rolls (2) to coincide with the vicinities of the insides of the strip widthwise ends or the vicinities of the outsides of the strip widthwise ends detected by the strip widthwise end position detector (32).

No. of Pages : 35 No. of Claims : 6

(12) PATENT APPLICATION PUBLICATION
(19) INDIA
(22) Date of filing of Application :22/07/2014
(21) Application No.1488/MUMNP/2014 A
(43) Publication Date : 17/04/2015

(54) Title of the invention : PHARMACEUTICAL FORMULATIONS FOR FUMAGILLIN DERIVATIVE PHF CONJUGATES

(51) International classification :C07D303/12
(31) Priority Document No :61/580,016
(32) Priority Date :23/12/2011
(33) Name of priority country :U.S.A.
(86) International Application No :PCT/US2012/071477
Filing Date :21/12/2012
(87) International Publication No :WO 2013/096901
(61) Patent of Addition to Application Number :NA
Filing Date :NA
(62) Divisional to Application Number :NA
Filing Date :NA

(71)**Name of Applicant :**
1)MERSANA THERAPEUTICS INC.
Address of Applicant :840 Memorial Drive Cambridge MA 02139 U.S.A.
(72)**Name of Inventor :**
1)AKULLIAN Laura
2)LIU Gui
3)LOWINGER Timothy B.
4)MCGILLICUDDY Dennis
5)STEVENSON Cheri
6)VAN DUZER John
7)YIN Mao
8)YURKOVETSKIY Aleksandr

(57) Abstract :
The invention described herein provides a mixture comprising polymer molecules or salts thereof wherein a polymer molecule in the mixture comprises covalently bound subunits L K and M wherein the average molecular weight of the polymer molecules in the mixture is about 50 kDa to about 200 kDa wherein the mole percentage of subunit M relative to the total amount of subunits in the mixture is about 90.5 to about 96 mol% v1 herein the mole percentage of subunit K relative to the total amount of subunits in the mixture is about 2.8 to about 7.3 mol% and wherein the mole percentage of subunit L is about relative to the total amount of subunits in the mixture 1. 2 to about 2. 2 mol%.

No. of Pages : 69 No. of Claims : 57

(12) PATENT APPLICATION PUBLICATION
(19) INDIA
(22) Date of filing of Application :15/04/2013
(21) Application No.1384/MUM/2013 A
(43) Publication Date : 17/04/2015

(54) Title of the invention : MICROBIAL PROCESS FOR THE PRODUCTON OF OPTICALLY PURE UNNATURAL CARBAMOYL AMINO ACIDS

(51) International classification	:C12P 41/00, C12P 13/04
(31) Priority Document No	:NA
(32) Priority Date	:NA
(33) Name of priority country	:NA
(86) International Application No	:NA
Filing Date	:NA
(87) International Publication No	: NA
(61) Patent of Addition to Application Number	:NA
Filing Date	:NA
(62) Divisional to Application Number	:NA
Filing Date	:NA

(71)**Name of Applicant :**
1)MACS-AGHARKAR RESEARCH INSTITUTE
Address of Applicant :G. G. AGARKAR ROAD, PUNE 411004, INDIA Maharashtra India
2)HI TECH BIOSCIENCES INDIA LTD.
(72)**Name of Inventor :**
1)ENGINEER ANUPAMA SURESHCHANDRA
2)DHAKEPHALKAR PRASHANT KAMALAKAR
3)RAGHAVENDRA P. GAIKAIWARI

(57) Abstract :
The present invention provides a process for synthesis of optically pure unnatural carbamoyl amino acids from hydantoin or hydantoin analog or 5-substututed hydantoin derivatives using D-selective hydantoinase enzyme. The process for preparation of recombinant DNA molecule, clone expressing recombinant D-hydantoinase gene, fractionation and purification of recombinant hydantoinase enzyme, biotransformation of hydantoin derivatives are provided in the present invention. Also, methods for increasing the level of expression of hydantoinase enzyme and sequence of D-selective hydantoinase geneand protein are described.

No. of Pages : 36 No. of Claims : 10

(12) PATENT APPLICATION PUBLICATION
(19) INDIA
(22) Date of filing of Application :17/04/2013

(21) Application No.1444/MUM/2013 A
(43) Publication Date : 17/04/2015

(54) Title of the invention : SEAT BELT STARTER

(51) International classification	:B60R 22/00, B60R 22/12
(31) Priority Document No	:NA
(32) Priority Date	:NA
(33) Name of priority country	:NA
(86) International Application No	:NA
Filing Date	:NA
(87) International Publication No	: NA
(61) Patent of Addition to Application Number	:NA
Filing Date	:NA
(62) Divisional to Application Number	:NA
Filing Date	:NA

(71)**Name of Applicant :**
1)PALASH SHRIVASTAVA
Address of Applicant :C/286 C-SECTOR SHAHPURA, NEAR B.D.A COLONY, BHOPAL (M.P.) - 462016 Madhya Pradesh India
(72)**Name of Inventor :**
1)PALASH SHRIVASTAVA
2)PAWANDEEP SINGH SOKHI
3)AVINASH CHOUDHARY
4)NISHCHAY BHAWSAR

(57) Abstract :
According to the invention, a seat belt control system for vehicle is disclosed. Relay circuit is placed between starter motor of the vehicle and ignition switch. One end of the seat belt is connected to the positive terminal of the battery and other end is connected to base of the transistor. When driver fastens up the seat belt, both the ends of seat belt joins together and allows the current to pass through the starter motor and ignition event takes place. In the event seat belt of the seat is not fastened, relay switch does not transmit the current from battery to the starter motor and thus does not enable the operation of ignition system.

No. of Pages : 11 No. of Claims : 6

(12) PATENT APPLICATION PUBLICATION
(19) INDIA
(22) Date of filing of Application :17/04/2013

(21) Application No.1445/MUM/2013 A
(43) Publication Date : 17/04/2015

(54) Title of the invention : EVALUATING TOTAL COST OF OWNERSHIP BASED ON SYSTEM DESIGN

(51) International classification	:G06F 17/30, G06F 17/50
(31) Priority Document No	:NA
(32) Priority Date	:NA
(33) Name of priority country	:NA
(86) International Application No	:NA
Filing Date	:NA
(87) International Publication No	: NA
(61) Patent of Addition to Application Number	:NA
Filing Date	:NA
(62) Divisional to Application Number	:NA
Filing Date	:NA

(71)**Name of Applicant :**
1)TATA CONSULTANCY SERVICES LIMITED
Address of Applicant :Nirmal Building, 9th Floor, Nariman Point, Mumbai, Maharashtra 400021, India Maharashtra India
(72)**Name of Inventor :**
1)BHATTACHARYA, Shruti
2)NATARAJAN, Swaminathan
3)LEE, Stephen
4)MANDLIYA, Arpit
5)SINGH, Suman
6)RAMDASI, Kunal

(57) Abstract :
A method and system for evaluating total cost of ownership (TCO) associated with a system is described. The method includes identifying a plurality of system elements. The identification of the plurality of system elements is based on user inputs and relationship between each of the plurality of system element. The method further includes identifying demand characteristics associated with each of the plurality of system elements. The method also includes associating a cost with each of the plurality of system elements based on the identified demand characteristics. The cost includes a direct cost and an indirect cost. Further, the method includes evaluating the TCO associated with the system. The TCO is evaluated by summing up the direct and indirect cost associated with the each of the plurality of system elements throughout a lifecycle of each of the system elements over a lifetime thereof.

No. of Pages : 27 No. of Claims : 14

(12) PATENT APPLICATION PUBLICATION
(19) INDIA
(22) Date of filing of Application :08/05/2014
(21) Application No.867/MUMNP/2014 A
(43) Publication Date : 17/04/2015

(54) Title of the invention : ULTRASOUND CUTTING DEVICE

(51) International classification :B26D7/08,B26D5/00,B26D1/00
(31) Priority Document No :10 2011 118 208.3
(32) Priority Date :11/11/2011
(33) Name of priority country :Germany
(86) International Application No:PCT/EP2012/004663
Filing Date :09/11/2012
(87) International Publication No :WO 2013/068123
(61) Patent of Addition to Application Number :NA
Filing Date :NA
(62) Divisional to Application Number :NA
Filing Date :NA

(71)**Name of Applicant :**
1)ARTECH ULTRASONIC SYSTEMS AG
Address of Applicant :Seestrasse 46 CH 8598 Bottighofen Switzerland
(72)**Name of Inventor :**
1)KISING J¼rgen

(57) Abstract :
The invention relates to an ultrasound cutting device (1) comprising at least one ultrasound converter (6) that is connected to a generator (2) at least one sound conductor (7) and at least one cutting edge (8). The sound conductor (7) is arranged between the ultrasound converter (6) and the cutting edge (8) and connects same to one another. The longitudinal center axis of the sound conductor (7) has a course that deviates from a straight line. The at least one generator (2) comprises means for passing through a defined ultrasound frequency range.

No. of Pages : 23 No. of Claims : 10

(12) PATENT APPLICATION PUBLICATION
(19) INDIA
(22) Date of filing of Application :08/05/2014
(21) Application No.868/MUMNP/2014 A
(43) Publication Date : 17/04/2015

(54) Title of the invention : CROSS COMMUNITY SEARCHING METHOD AND DEVICE

(51) International classification :G06F17/30
(31) Priority Document No :201210143271.3
(32) Priority Date :10/05/2012
(33) Name of priority country :China
(86) International Application No :PCT/CN2013/074299
Filing Date :17/04/2013
(87) International Publication No :WO 2013/166903
(61) Patent of Addition to Application Number :NA
Filing Date :NA
(62) Divisional to Application Number :NA
Filing Date :NA

(71)**Name of Applicant :**
1)TENCENT TECHNOLOGY (SHENZHEN) COMPANY LIMITED
Address of Applicant :Room 403 East Block 2 SEG Park Zhenxing Road Futian District Shenzhen Guangdong 518044 China
(72)**Name of Inventor :**
1)CAO Yue
2)CAO Yuancheng
3)LIU Rui
4)ZOU Wei
5)YANG Junsong
6)SUN Wei

(57) Abstract :
The present invention provides a cross community searching method and device. The method comprises the following steps: receiving a user s search request determining communities used by the user according to user attribute information which is included in the search request; generating sub research requests corresponding to each community used by the user according to the search request obtaining search results corresponding to the sub research request; incorporating the search results corresponding to all of the sub research requests and sending the incorporated search results to the user. The present invention can improve user s search efficiency.

No. of Pages : 23 No. of Claims : 15

(12) PATENT APPLICATION PUBLICATION
(19) INDIA
(22) Date of filing of Application :15/05/2014
(21) Application No.908/MUMNP/2014 A
(43) Publication Date : 17/04/2015

(54) Title of the invention : INTESTINAL FIBROSIS TREATMENT AGENT

(51) International classification :A61K47/10,A61K45/08,A61P1/04
(31) Priority Document No :2011-253085
(32) Priority Date :18/11/2011
(33) Name of priority country :Japan
(86) International Application No :PCT/JP2012/079783
Filing Date :16/11/2012
(87) International Publication No :WO 2013/073667
(61) Patent of Addition to Application Number :NA
Filing Date :NA
(62) Divisional to Application Number :NA
Filing Date :NA

(71)**Name of Applicant :**
1)NITTO DENKO CORPORATION
Address of Applicant :1 1 2 Shimohozumi Ibaraki shi Osaka 5678680 Japan
(72)**Name of Inventor :**
1)AYABE Tokiyoshi
2)NAKAMURA Kiminori
3)MINOMI Kenjiro
4)TANAKA Yasunobu

(57) Abstract :
The present invention pertains to a material delivery carrier for extracellular matrix producing cells in the intestines the carrier comprising a retinoid as a targeting agent as well as to an intestinal fibrosis treatment agent using the carrier.

No. of Pages : 64 No. of Claims : 16

(12) PATENT APPLICATION PUBLICATION
(19) INDIA
(22) Date of filing of Application :14/05/2014
(21) Application No.909/MUMNP/2014 A
(43) Publication Date : 17/04/2015

(54) Title of the invention : ACCUMULATION DEVICE FOR PAPER LIKE SHEETS

(51) International classification :B65H29/22,B65H39/065
(31) Priority Document No :201210153172.3
(32) Priority Date :17/05/2012
(33) Name of priority country :China
(86) International Application No :PCT/CN2013/073169
Filing Date :26/03/2013
(87) International Publication No :WO 2013/170661
(61) Patent of Addition to Application Number :NA
Filing Date :NA
(62) Divisional to Application Number :NA
Filing Date :NA

(71)**Name of Applicant :**
1)GRG BANKING EQUIPMENT CO.LTD.
Address of Applicant :9 Kelin Road Science City Luogang District Guangzhou Guangdong 510663 China
(72)**Name of Inventor :**
1)KONG Demei
2)TAO Pinde

(57) Abstract :
An accumulation device for paper like sheets comprises a conveying part a clamping part a guiding part and an accumulating part which are connected serially. The conveying part is used for conveying the paper like sheet to the clamping part. The clamping part comprises a drive shaft and multiple banknote stacking wheels fixed to the drive shaft and every banknote stacking wheel is provided with multiple wheel blades having the same curvature. The paper like sheet can be clamped between any two adjacent wheel blades and rotatably conveyed to the guiding part. The guiding part receives the paper like sheet conveyed by the clamping part and guides the paper like sheet to the accumulating part. The accumulating part is used for accumulating the paper like sheet conveyed by the guide part. The paper like sheets are reliably collected among the wheel blades and prevented from scattering and thus the paper like sheets can be uniformly arranged in order and stacked on the accumulating part.

No. of Pages : 11 No. of Claims : 4

(12) PATENT APPLICATION PUBLICATION
(19) INDIA
(22) Date of filing of Application :16/05/2014
(21) Application No.915/MUMNP/2014 A
(43) Publication Date : 17/04/2015

(54) Title of the invention : INTEGRATION SYSTEM AND METHOD FOR REGULATING AND OPERATING IN PARALLEL DIFFERENT HIGH VOLTAGE SOURCES

(51) International classification :H02J3/04,H02J3/38,G05F1/10
(31) Priority Document No :PI1106471-4
(32) Priority Date :17/10/2011
(33) Name of priority country :Brazil
(86) International Application No :PCT/BR2012/000390
Filing Date :15/08/2012
(87) International Publication No :WO 2013/056325
(61) Patent of Addition to Application Number :NA
Filing Date :NA
(62) Divisional to Application Number :NA
Filing Date :NA

(71)**Name of Applicant :**
1)COMPANHIA HIDRO ELECTRICA DO SƒO FRANCISCO CHESF
Address of Applicant :Rua Delmiro Gouveia 333 San Martin Edificio Andr Falc£o Recife PE Brazil
(72)**Name of Inventor :**
1)LISBOA Luciano Antonio Calmon

(57) Abstract :
The present invention provides integration systems and methods for regulating and operating in parallel different models of voltage sources and/or high voltage powered taps. In a preferred embodiment the present invention allows any number of devices such as transformers with different voltages and different specifications to be integrated in an efficient and inexpensive manner according to a same logic of operation in parallel while complying with rigorous criteria and requirements.

No. of Pages : 39 No. of Claims : 26

(12) PATENT APPLICATION PUBLICATION
(19) INDIA
(22) Date of filing of Application :08/05/2014
(21) Application No.866/MUMNP/2014 A
(43) Publication Date : 17/04/2015

(54) Title of the invention : SYSTEM AND APPARATUS FOR POWER EFFICIENT DELIVERY OF SOCIAL NETWORK UPDATES TO A RECEIVER DEVICE IN A BROADCAST NETWORK

(51) International classification :H04H60/25,G06F17/30
(31) Priority Document No :13/274427
(32) Priority Date :17/10/2011
(33) Name of priority country :U.S.A.
(86) International Application No :PCT/US2012/060454
Filing Date :16/10/2012
(87) International Publication No :WO 2013/059209
(61) Patent of Addition to Application Number :NA
Filing Date :NA
(62) Divisional to Application Number :NA
Filing Date :NA

(71)**Name of Applicant :**
1)QUALCOMM INCORPORATED
Address of Applicant :Attn: International IP Administration 5775 Morehouse Drive San Diego CA 92121 U.S.A.
(72)**Name of Inventor :**
1)KHORASHADI Behrooz
2)DAS Saumitra M.

(57) Abstract :
Systems and methods for delivering social network updates from popular entities to receiver devices via broadcast or multicast networks obtain updates from highly popular entities. Updates may be assembled by a server crawling social network sites. To enable selective reception the obtained updates may be broadcast/multicast according to a schedule that is communicated to receiver devices in advance such as a catalog file. Receiver devices receive the catalog file and use the included information to selectively receive updates that are relevant to a user of the receiver device. Updates received from broadcasts or multicasts are cached in memory of the receiver device. When a user requests access a particular social network entity on the receiver device that request may be satisfied by accessing a social network updates cached on the receiver device. Broadcasting and/or multicasting highly popular social network updates may relieve burdens on unicast networks.

No. of Pages : 87 No. of Claims : 55

(12) PATENT APPLICATION PUBLICATION
(19) INDIA
(22) Date of filing of Application :15/05/2014
(21) Application No.911/MUMNP/2014 A
(43) Publication Date : 17/04/2015

(54) Title of the invention : SEALING STRUCTURE AND ROTATING MACHINE EQUIPPED WITH SAME

(51) International classification :F16J15/453,F01D11/02,F02C7/28
(31) Priority Document No :2012-023071
(32) Priority Date :06/02/2012
(33) Name of priority country :Japan
(86) International Application No :PCT/JP2013/052564
Filing Date :05/02/2013
(87) International Publication No :WO 2013/118701
(61) Patent of Addition to Application Number :NA
Filing Date :NA
(62) Divisional to Application Number :NA
Filing Date :NA

(71)**Name of Applicant :**
1)MITSUBISHI HITACHI POWER SYSTEMS LTD.
Address of Applicant :3 1 Minatomirai 3 Chome Nishi ku Yokohama shi Kanagawa 2208401 Japan
(72)**Name of Inventor :**
1)ONISHI Tomoyuki
2)NISHIMOTO Shin

(57) Abstract :
The sealing structure (7) is provided with fins (40) that protrude from the outer circumferential surface of a rotor (5) along the circumferential direction (R) and stationary blades (30) on which an abradable film (60) is formed on the inner circumferential surface (50a) of the inner shroud (50) so as to face the fins (40) and depressions and protrusions are formed on the inner circumferential surface (50a) of the inner shroud (50) and the abradable film (60) is formed conforming to the depressions and protrusions.

No. of Pages : 36 No. of Claims : 9

(12) PATENT APPLICATION PUBLICATION
(19) INDIA
(22) Date of filing of Application :16/05/2014
(21) Application No.912/MUMNP/2014 A
(43) Publication Date : 17/04/2015

(54) Title of the invention : METHOD AND APPARATUS FOR VERIFYING COMPLIANCE WITH DENTAL APPLIANCE THERAPY

(51) International classification :A61C19/04,A61B5/01,A61F5/56
(31) Priority Document No :61/563693
(32) Priority Date :25/11/2011
(33) Name of priority country :U.S.A.
(86) International Application No :PCT/CA2012/050845
Filing Date :23/11/2012
(87) International Publication No :WO 2013/075246
(61) Patent of Addition to Application Number :NA
Filing Date :NA
(62) Divisional to Application Number :NA
Filing Date :NA

(71)**Name of Applicant :**
1)BRAEBON MEDICAL CORPORATION
Address of Applicant :100 Schneider Road Suite 1 Kanata Ontario K2K 1Y2 Canada
(72)**Name of Inventor :**
1)BRADLEY Donald Carmon

(57) Abstract :
A method and an apparatus for verifying compliance with a dental appliance therapy for a human patient is described. At least one parameter of a dental appliance worn by the human patient is periodically measured and compliance with the dental appliance therapy is determined by performing a spectral analysis of the measured parameter.

No. of Pages : 46 No. of Claims : 36

(12) PATENT APPLICATION PUBLICATION
(19) INDIA
(22) Date of filing of Application :04/04/2013
(21) Application No.1304/MUM/2013 A
(43) Publication Date : 17/04/2015

(54) Title of the invention : DIESEL FUEL SUPPLY CIRCUIT

(51) International classification :F02M31/20, F02M37/00
(31) Priority Document No :13/455,452
(32) Priority Date :25/04/2012
(33) Name of priority country :U.S.A.
(86) International Application No :NA
Filing Date :NA
(87) International Publication No : NA
(61) Patent of Addition to Application Number :NA
Filing Date :NA
(62) Divisional to Application Number :NA
Filing Date :NA

(71)**Name of Applicant :**
1)DEERE & COMPANY
Address of Applicant :ONE JOHN DEERE PLACE, MOLINE, ILLINOIS, 61265-8098, USA
(72)**Name of Inventor :**
1)DEREW MICHAEL W
2)HERBST GARRICK W
3)VANDIKE NATHAN R
4)VAN HAL TODD E

(57) Abstract :
A diesel fuel supply circuit comprises a diesel engine (100); a fuel cooler (104); a fuel tank (102), and a valve (114). The valve (114) is operable to move the fuel cooler (104) from (1) a position within the circuit in which it cools fuel leaving the diesel engine (100) and going to the fuel tank (102) to (2) a position in which it cools fuel leaving the fuel tank (102) and going to the diesel engine (100) and vice versa.

No. of Pages : 15 No. of Claims : 16

(12) PATENT APPLICATION PUBLICATION
(19) INDIA
(22) Date of filing of Application :16/04/2013

(21) Application No.1427/MUM/2013 A
(43) Publication Date : 17/04/2015

(54) Title of the invention : SEPARATING DEVICE

(51) International classification	:F01M 13/04, F01M 9/00
(31) Priority Document No	:102012008808.6
(32) Priority Date	:07/05/2012
(33) Name of priority country	:Germany
(86) International Application No	:NA
Filing Date	:NA
(87) International Publication No	: NA
(61) Patent of Addition to Application Number	:NA
Filing Date	:NA
(62) Divisional to Application Number	:NA
Filing Date	:NA

(71)**Name of Applicant :**
1)MANN+HUMMEL GMBH
Address of Applicant :HINDENBURGSTR. 45, 71638 LUDWIGSBURG, GERMANY
(72)**Name of Inventor :**
1)MARKUS MELDE
2)PRAVEEN PRAHLAD

(57) Abstract :
A separating device (1), in particular for a crankcase venting device of an internal combustion engine, comprises an inlet (25) for supplying a fluid containing particles to be separated, a baffle plate.(22) for separating the particles from the fluid, several nozzles (21) oriented toward the baffle plate (22), and a pivotable flap (15) that, as a function of its pivot position, fluidically connects a first number of nozzles (21) with the inlet (25) and fluidically separates from the inlet (25) a second number of nozzles (21).

No. of Pages : 19 No. of Claims : 10

(12) PATENT APPLICATION PUBLICATION
(19) INDIA
(22) Date of filing of Application :16/04/2013
(21) Application No.1428/MUM/2013 A
(43) Publication Date : 17/04/2015

(54) Title of the invention : NOVEL PROCESS FOR THE SYNTHESIS OF (2A,5B,7B,10B,13A)-4-ACETOXY-13-({(2R,3S)-3[(TERTBUTOXYCARBONYL)AMINO]-2-HYDROXY-3-PHENYL PROPANOYL}OXY)-1-HYDROXY-7,10-DIMETHOXY-9-OXO-5,20-EPOXYTAX-11-EN-2-YL BENZOATE

(51) International classification	:C07D413/14, C07D409/14
(31) Priority Document No	:NA
(32) Priority Date	:NA
(33) Name of priority country	:NA
(86) International Application No	:NA
Filing Date	:NA
(87) International Publication No	: NA
(61) Patent of Addition to Application Number	:NA
Filing Date	:NA
(62) Divisional to Application Number	:NA
Filing Date	:NA

(71)**Name of Applicant :**
1)PANACEA BIOTEC LIMITED
Address of Applicant :PANACEA BIOTEC LTD., PLOT NO. GEN - 72/3, TTC INDUSTRIAL AREA, OPP. MILLENNIUM BUSINESS PARK, GATE NO 2, MAHAPE, NAVI MUMBAI 400710, MAHARASHTRA, INDIA.
(72)**Name of Inventor :**
1)JAIN, RAJESH
2)SIRIPRAGADA, MAHENDER RAO
3)SINGH, JASPAL
4)AHUJA, PARAMJEET SINGH
5)RANA, PRADEEP KUMAR

(57) Abstract :
The present invention is related to a novel process of synthesis of (2α,5β,7β,10β,13α)-4-acetoxy-13-({(2R,3S)-3[(tert-butoxycarbonyl)amino]-2-hydroxy-3-phenylpropanoyl}oxy)-l-hydroxy-7. 10-dimethoxy-9-oxo-5,20-epoxytax-ll-en-2-yl benzoate (Cabazitaxel) and its pharmaceutic ally acceptable salts.

No. of Pages : 24 No. of Claims : 8

(12) PATENT APPLICATION PUBLICATION
(19) INDIA
(22) Date of filing of Application :23/07/2014
(21) Application No.1489/MUMNP/2014 A
(43) Publication Date : 17/04/2015

(54) Title of the invention : THREE PHASE MAGNETIC CORES FOR MAGNETIC INDUCTION DEVICES AND METHODS FOR MANUFACTURING THEM

(51) International classification	:H01F27/25,H01F30/12,H01F41/02
(31) Priority Document No	:217576
(32) Priority Date	:17/01/2012
(33) Name of priority country	:Israel
(86) International Application No	:PCT/IL2013/050037
Filing Date	:15/01/2013
(87) International Publication No	:WO 2013/108247
(61) Patent of Addition to Application Number	:NA
Filing Date	:NA
(62) Divisional to Application Number	:NA
Filing Date	:NA

(71)**Name of Applicant :**
1)U.T.T. UNIQUE TRANSFORMER TECHNOLOGIES LTD
Address of Applicant :2 Hailan Street P.O. Box 203 30600 Or Akiva Israel
(72)**Name of Inventor :**
1)ADAR Eliezer
2)BOLOTINSKY Yuri

(57) Abstract :
Three phase magnetic cores for magnetic induction devices (e.g. transformers coils chokes) and methods for manufacturing them are disclosed. The magnetic cores are generally constructed from three generally rectangular magnetic core frames having a stair stepped configuration extending along side portions of the frames. The frames are arranged to form a triangular prism structure such that side portions of locally adjacent frames are uniformly engaged to form three core legs over which coils of a three phase magnetic induction device may be placed.

No. of Pages : 46 No. of Claims : 21

(12) PATENT APPLICATION PUBLICATION
(19) INDIA
(22) Date of filing of Application :01/06/2010
(21) Application No.2001/KOLNP/2010 A
(43) Publication Date : 17/04/2015

(54) Title of the invention : DEVICES AND METHODS FOR ENHANCING THE FREQUENCY OUTPUT OF A PORTABLE AUDIO DEVICE

(51) International classification :G01S7/484
(31) Priority Document No :11/965,022
(32) Priority Date :27/12/2007
(33) Name of priority country :U.S.A.
(86) International Application No :PCT/US2008/087102
Filing Date :17/12/2008
(87) International Publication No :WO 2009/085796
(61) Patent of Addition to Application Number :NA
Filing Date :NA
(62) Divisional to Application Number :NA
Filing Date :NA

(71)**Name of Applicant :**
1)MOTOROLA, INC.
Address of Applicant :1303 EAST ALGONQUIN ROAD, SCHAUMBURG, ILLINOIS 60196 UNITED STATES OF AMERICA
(72)**Name of Inventor :**
1)CHEN, SHAOHAI
2)CLARK, JOEL A.
3)STEUER, PAUL R.
4)ZUREK, ROBERT, A.
5)ADY, ROGER, W.
6)DAVIS, GILES

(57) Abstract :
Disclosed are passive acoustic structures, portable audio devices configured for use with the passive acoustic structures and methods for enhancing the frequency output of a speaker of a portable device configured for use with a disclosed passive acoustic structure. The disclosed portable audio device may include an opening proximal a speaker cavity of the device, a shutter or door to open and close the opening so that the device interoperates with a docking station of a passive acoustic structure including a labyrinth or a transmission line system that may increase the frequency range of the system. For an end user to experience the music and multimedia features of a portable audio device, and in particular a mobile communication device, the above-described passive acoustic structure may provide a bass enhancement for the typically small loudspeaker of a portable audio device with no additional loudspeaker and therefore no additional circuitry.

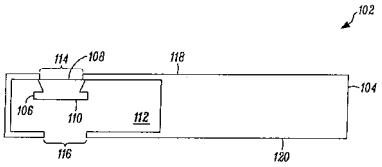

No. of Pages : 35 No. of Claims : 20

(12) PATENT APPLICATION PUBLICATION
(19) INDIA
(22) Date of filing of Application :27/12/2011
(21) Application No.5199/KOLNP/2011 A
(43) Publication Date : 17/04/2015

(54) Title of the invention : TIRE AIR PRESSURE DETECTING DEVICE, TIRE AIR PRESSURE MONITORING SYSTEM, AND TIRE AIR PRESSURE NOTIFICATION METHOD

(51) International classification :B60C 23/04
(31) Priority Document No :2009-162982
(32) Priority Date :09/07/2009
(33) Name of priority country :Japan
(86) International Application No :PCT/IB2010/001512
Filing Date :23/06/2010
(87) International Publication No :WO 2011/004229
(61) Patent of Addition to Application Number :NA
Filing Date :NA
(62) Divisional to Application Number :NA
Filing Date :NA

(71)**Name of Applicant :**
1)NISSAN MOTOR CO., LTD.
Address of Applicant :2, TAKARA-CHO, KANAGAWA-KU YOKOHAMA-SHI, KANAGAWA 221-0023, JAPAN
(72)**Name of Inventor :**
1)TAKAHIRO MAEKAWA
2)TETSURO HIROHAMA
3)TAKASHI SHIMA

(57) Abstract :
A tire air pressure detecting device (2) includes an air pressure detecting unit (10a), a transmitting unit (1Od), a running state detecting unit (10b), an air pressure change rate detecting section (10c) and a frequency adjustment section (10c). The frequency adjustment section (10c) is configured to adjust a transmitting frequency at which the detected value of the tire air pressure detected by the air pressure detecting unit (10a) is externally transmitted by the transmitting unit (1Od) according to the running state detected by the running state detecting unit (10b) and the air pressure change rate detected by the air pressure change rate detecting section (10c). The frequency adjustment section (10c) is further configured to variably set a threshold value for switching the transmitting frequency from low frequency to high frequency according to the running state and the air pressure change rate.

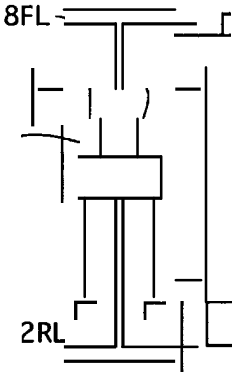

No. of Pages : 97 No. of Claims : 20

(12) PATENT APPLICATION PUBLICATION
(19) INDIA
(22) Date of filing of Application :13/03/2013

(21) Application No.701/KOLNP/2013 A
(43) Publication Date : 17/04/2015

(54) Title of the invention : CONTROL DEVICE OF AUTOMATIC TRANSMISSION

(51) International classification :F16H61/16
(31) Priority Document No :2010-193254
(32) Priority Date :31/08/2010
(33) Name of priority country :Japan
(86) International Application No :PCT/JP2011/067729
Filing Date :03/08/2011
(87) International Publication No :WO 2012/029490
(61) Patent of Addition to Application Number :NA
Filing Date :NA
(62) Divisional to Application Number :NA
Filing Date :NA

(71)**Name of Applicant :**
1)NISSAN MOTOR CO., LTD.
Address of Applicant :2, Takara-cho, Kanagawa-ku, Yokohama-shi, Kanagawa 221-0023, Japan
2)
(72)**Name of Inventor :**
1)MATSUO Katsuhiro
2)ISHIDA Keizo

(57) Abstract :
This automatic transmission has an automatic shifting mode and a manual shifting mode. During automatic shifting by means of a shifting map in the automatic shifting mode, or during forced shifting performed regardless of the manual operation in the manual shifting mode, when a manual operation is performed in the reverse direction from the automatic shifting or the forced shifting, the shift based on the first manual operation is forbidden. Shifts based on the second and subsequent manual operations in the reverse direction are permitted.

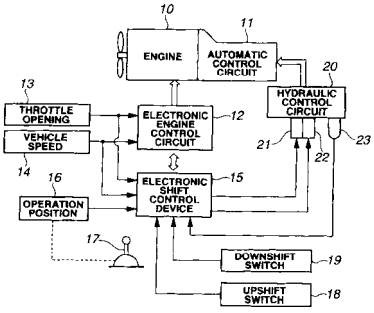

No. of Pages : 22 No. of Claims : 2

(12) PATENT APPLICATION PUBLICATION
(19) INDIA
(22) Date of filing of Application :28/12/2012
(21) Application No.4163/KOLNP/2012 A
(43) Publication Date : 17/04/2015

(54) Title of the invention : NEGATIVE ELECTRODE FOR SECONDARY BATTERY, AND PROCESS FOR PRODUCTION THEREOF

(51) International classification :H01M4/13,H01M4/04,H01M4/133
(31) Priority Document No :2010-124823
(32) Priority Date :31/05/2010
(33) Name of priority country :Japan
(86) International Application No :PCT/JP2011/061990
Filing Date :25/05/2011
(87) International Publication No :WO 2011/152263
(61) Patent of Addition to Application Number :NA
Filing Date :NA
(62) Divisional to Application Number :NA
Filing Date :NA

(71)**Name of Applicant :**
1)NISSAN MOTOR CO., LTD.
Address of Applicant :2, TAKARA-CHO,KANAGAWA-KU YOKOHAMA-SHI,KANAGAWA 221-0023 JAPAN
(72)**Name of Inventor :**
1)KENJI OHARA
2)SUGA SOHEI
3)YASUO OHTA
4)TOMOYA KUBOTA
5)KAZUYUKI SAKAMOTO
6)TAKAAKI ABE
7) SATORU ICHIKAWA
8)KENJI HOSAKA
9)KOSUKE HAGIYAMA
10)HIROSHI MIYAKUBO

(57) Abstract :
Disclosed is a negative electrode for a secondary battery which comprises a current collector and a negative electrode active material layer that is formed on the surface of the current collector and contains negative electrode active material particles. In the negative electrode active material layer an insulating material (e.g. alumina particles polyethylene oxide, or a styrene butadiene rubber latex) is arranged between the negative electrode active material particles so that the induction of electrical conductivity cannot be induced by percolation pass in every part of the negative electrode active material layer. The negative electrode ensures battery performance in a secondary battery, and can effectively suppress the generation of a short circuit current that usually occurs by internal short circuit or the generation of heat that usually occurs in association with the generation of the short circuit current in a secondary battery.

No. of Pages : 75 No. of Claims : 23

(12) PATENT APPLICATION PUBLICATION
(19) INDIA
(22) Date of filing of Application :13/01/2012
(21) Application No.71/KOLNP/2012 A
(43) Publication Date : 17/04/2015

(54) Title of the invention : VEHICLE CHARGING PORT ARRANGEMENT

(51) International classification :B60L 11/18
(31) Priority Document No :2009-168487
(32) Priority Date :17/07/2009
(33) Name of priority country :Japan
(86) International Application No :PCT/IB2010/001561
Filing Date :28/06/2010
(87) International Publication No :WO 2011/007223
(61) Patent of Addition to Application Number :NA
Filing Date :NA
(62) Divisional to Application Number :NA
Filing Date :NA

(71)**Name of Applicant :**
1)NISSAN MOTOR CO., LTD.
Address of Applicant :2, TAKARA-CHO, KANAGAWA-KU YOKOHAMA-SHI, KANAGAWA 221-0023, JAPAN
(72)**Name of Inventor :**
1)YASUTSUNE TERASHIMA
2)TAKESHI KAKIUCHI
3)MASAHIRO ATAKA

(57) Abstract :
A vehicle charging port arrangement is provided with a vehicle body (B), a charging port support member (11) and an electric charging port (15). The vehicle body (B) includes a vehicle front end portion. The charging port support member (11) is supported on the vehicle front end portion. The charging port support member (11) includes an energy absorbing structure (11b, 11d) that is configured and arranged to deform towards a support structure of the vehicle front end portion and into an energy absorbing area that is disposed forward of the support structure of the vehicle front end portion during a frontal impact. The electric charging port (15) is attached to the charging port support member (11), with the electric charging port (15) being configured to receive an electric charging connector.

No. of Pages : 21 No. of Claims : 10

(12) PATENT APPLICATION PUBLICATION
(19) INDIA
(22) Date of filing of Application :16/08/2012
(21) Application No.2215/KOLNP/2012 A
(43) Publication Date : 17/04/2015

(54) Title of the invention : DIFFERENTIAL GEAR CASE AND METHOD FOR PROCESSING SAME

(51) International classification :F16H48/00,F16H48/08
(31) Priority Document No :2010-021248
(32) Priority Date :02/02/2010
(33) Name of priority country :Japan
(86) International Application No :PCT/JP2011/050437
Filing Date :13/01/2011
(87) International Publication No :WO 2011/096255
(61) Patent of Addition to Application Number :NA
Filing Date :NA
(62) Divisional to Application Number :NA
Filing Date :NA

(71)**Name of Applicant :**
1)NISSAN MOTOR CO., LTD.
Address of Applicant :2, Takara-cho, Kanagawa-ku Yokohama-shi, Kanagawa 221-0023, Japan
(72)**Name of Inventor :**
1)Toshirou SHIMOSAKA
2)Kiyohito OYAMADA
3)Shoichi TETSUKA
4)Makoto IMAIDA

(57) Abstract :
Disclosed is a differential gear case wherein an annular flange that rotates around the rotation axis of the storage housing is provided on the outer peripheral surface of a storage housing of a differential gear, and an opening which communicates with a storage space formed on the inside of the storage housing is formed on one of the areas of the storage housing, said areas being bordered by the flange. In the differential gear case, an affixing part for affixing the differential gear case is provided on the area of the storage housing, on which the opening is formed. The affixing part is provided with side surfaces parallel to a plane including the rotation axis of the storage housing, said side surfaces consisting of two planes that are spaced and disposed around the rotation axis. The affixing part is integral with the external edge on the opposite side of the flange, among the edges defining the opening.

No. of Pages : 25 No. of Claims : 4

(12) PATENT APPLICATION PUBLICATION
(19) INDIA
(22) Date of filing of Application :10/10/2013
(21) Application No.1170/KOL/2013 A
(43) Publication Date : 17/04/2015

(54) Title of the invention : 'A UNIVERSAL DEVICE TO GUIDE AND SUPPORT A CYLINDRICAL WORKPIECE DURING FRICTION STIR WELDING PROCESS'

(51) International classification	:B23K 20/00
(31) Priority Document No	:NA
(32) Priority Date	:NA
(33) Name of priority country	:NA
(86) International Application No	:NA
Filing Date	:NA
(87) International Publication No	: NA
(61) Patent of Addition to Application Number	:NA
Filing Date	:NA
(62) Divisional to Application Number	:NA
Filing Date	:NA

(71)**Name of Applicant :**
1)BHARAT HEAVY ELECTRICALS LIMITED
Address of Applicant :REGION CAL OPERATIONS DIVISION(ROD) PLOT NO:9/1, DJBLOCK 3RD FLOOR KARUNAMOYEE, SALTLAKE CITY, KOLKATA-700091 HAVING ITS REGISTERED OFFICE AT BHEL HOUSE SIRI FORT, NEW DELHI - 110049, INDIA.
(72)**Name of Inventor :**
1)SUSHANT SHARMA
2)ROYSTON D'SOUZA
3)LUCKY GAUR

(57) Abstract :
The invention relates to a universal device to guide and support a cylindrical work piece during friction stir welding process comprising a base plate (1) having a plurality of slots configured at equi-spaced locations to mount the plate (1) on a programmable friction stir welding machine; a clamping assembly (2) accommodable on the base plate (1) at multiple locations depending on the length of the cylindrical body, the clamping assembly (2) providing an error-free support to the cylindrical body during the welding; and a top clamp (3) holding a seam joint in line with a longitudinal seam welding through adjustment in variation in the diameter of the cylindrical objects being jointed.

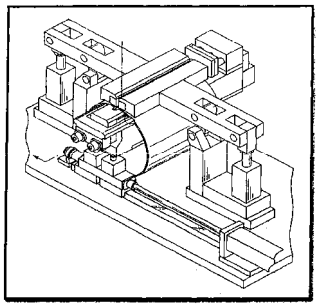

No. of Pages : 10 No. of Claims : 2

(12) PATENT APPLICATION PUBLICATION
(19) INDIA
(22) Date of filing of Application :10/10/2013
(21) Application No.1171/KOL/2013 A
(43) Publication Date : 17/04/2015

(54) Title of the invention : 'A QUICK CLOSING DEVICE FOR STEAM IN COLD REHEAT LINE OF POWER PLANT'

(51) International classification :F01K 7/00
(31) Priority Document No :NA
(32) Priority Date :NA
(33) Name of priority country :NA
(86) International Application No :NA
Filing Date :NA
(87) International Publication No : NA
(61) Patent of Addition to Application Number :NA
Filing Date :NA
(62) Divisional to Application Number :NA
Filing Date :NA

(71)**Name of Applicant :**
1)BHARAT HEAVY ELECTRICALS LIMITED
Address of Applicant :REGION CAL OPERATIONS DIVISION(ROD) PLOT NO:9/1, DJBLOCK 3RD FLOOR KARUNAMOYEE,SALTLAKE CITY, KOLKATA-700091, HAVING ITS REGISTERED OFFICE AT BHEL HOUSE SIRI FORT, NEW DELHI - 110049, INDIA.
(72)**Name of Inventor :**
1)KHAMRUDEEN JALALUDEEN

(57) Abstract :
The invention relates to a quick closing device in a cold reheat line connecting a high pressure turbine to a Reheater, the device comprising: a body (001) which encompasses a steam supply circuit in the turbine; the body (001) having an inlet aligned to an inlet piping from the turbine, and an outlet uniaxial to the inlet pipe; a bonnet (02) connected to the body (01) either by one of gasket bolting and pressure seal bolting; a Seat ring made of hard material in cast form, firmly held onto the body (01); and a disc (03) made from forging and, having a convex profile to allow tight seating of the disc with the seat ring.

No. of Pages : 8 No. of Claims : 3

(12) PATENT APPLICATION PUBLICATION
(19) INDIA
(22) Date of filing of Application :29/11/2011
(21) Application No.4872/KOLNP/2011 A
(43) Publication Date : 17/04/2015

(54) Title of the invention : NEGATIVE ELECTRODE FOR LITHIUM ION SECONDARY BATTERY AND BATTERY USING SAME

(51) International classification	:H01M 4/13,H01M 4/66
(31) Priority Document No	:2009-128966
(32) Priority Date	:28/05/2009
(33) Name of priority country	:Japan
(86) International Application No	:PCT/JP2010/056574
Filing Date	:13/04/2010
(87) International Publication No	:WO 2010/137415
(61) Patent of Addition to Application Number	:NA
Filing Date	:NA
(62) Divisional to Application Number	:NA
Filing Date	:NA

(71)**Name of Applicant :**
1)NISSAN MOTOR CO., LTD.
Address of Applicant :2, TAKARA-CHO, KANAGAWA-KU, YOKOHAMA-SHI, KANAGAWA 221-0023, JAPAN
(72)**Name of Inventor :**
1)KENJI OHARA
2)HIROAKI TANIZAKI
3)NORIKAZU MINEO

(57) Abstract :
There is provided a negative electrode for a lithium-ion secondary battery, including a conductive substrate, a negative electrode active material layer containing a negative electrode active material capable of absorbing and desorbing lithium ions and a conductive member having a lower elastic modulus than that of the conductive substrate, wherein at least part of the negative electrode active material is connected to the conductive substrate via the conductive member. There is also provided a lithium-ion secondary battery with such a negative electrode.

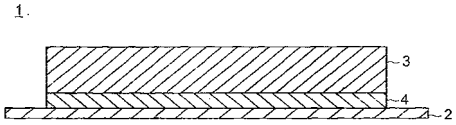

No. of Pages : 72 No. of Claims : 11

PUBLICATION U/S 84(3) IN RESPECT OF APPLICANTION FOR RESTORATION OF PATENT (DELHI)

Notice is hereby given that any person interested in opposing the following application for restoration of Patent under Section 60 of the Patent Act, 1970 may at any time within 2 months from the date of Publication of this notice, given notice to the Controller of Patent at the appropriate office on the prescribed form 14 under Rule 85 of the Patent Rules, 2003

PATENT NO.	APPLICANTS	TITLE	DATE OF CESSATION	APPROPRIATE OFFICE
189673	**PARDEEP KUMAR ROHATGI. An Indian National.**	**A METHOD TO PRODUCE A METAL MATRIX COMPOSITE CONTAINING REINFORCING MATERIAL**	**30/03/2013**	**DELHI**
231927	**EMISPHERE TECHNOLOGIES, INC**	**:A pharmaceutical composition containing insulin as the active agent and the delivery agent being the monosodium salt of 4-CNAB (Sodium N-[4-(4-chloro-2hydroxybenzoyl)amino1 butanoic acid)**	***07/01/2012***	**DELHI**

PUBLICATION U/S 60 IN RESTECT OF APPLICATION FOR RESTORATION OF PATENT (DELHI)

Notice is hereby given that application of under mentioned patents have been allowed and said patents are restored.

PATENT NO.	APPLICANTS	TITLE	DATE OF PUBLICATION IN JOURNAL	APPROPRIATE OFFICE
221788	LAJPAT RAI KHOSLA(India) RAJESH KHOSLA(India)	AN IMPROVED IMPLUSE SEALING SYSTEM	01/08/2014	DELHI
241655	FRESENIUS KABI DEUTSCHLAND GMBH.(Germany)	CONNECTOR FOR PACKINGS CONTAINING MEDICAL LIQUIDS, AND CORRESPONDING PACKING FOR MEDICAL LIQUIDS	31/10/2014	DELHI
209146	CHURAMONI SEN(India)	A DEVICE FOR CONTROLLING POLLUTION	31/10/2014	DELHI
242642	THE CHIEF CONTROLLER,MINISTRY OF DEFENCE(India)	A PROCESS FOR THE PREPARATION OF NICKEL BASE SUPER ALLOYS	31/10/2014	DELHI

Publication Under Section 43(2) in Respect of the Grant

Following Patents have been granted and any person interested in opposing these patents under Section 25(2) may at any time within one year from the date of this issue, give notice to the Controller of Patents at the appropriate office, on the prescribed form-7 along with written statement and evidence, if any.

Serial Number	Patent Number	Application Number	Date of Application	Date of Priority	Title of Invention	Name of Patentee	Date of Publication of Abstract u/s 11(A)	Appropriate Office
1	266177	5715/DELNP/2006	04/03/2005	09/03/2004	FILTER PLATE ASSEMBLY FOR FILTER.	DUBY, SEAN, R.	22/06/2007	DELHI
2	266186	2528/DEL/2007	03/12/2007 15:10:21	04/12/2006	VERTICAL-TYPE ROLLER MILL	KAWASAKI JUKOGYO KABUSHIKI KAISHA	13/06/2008	DELHI
3	266188	4722/DELNP/2006	15/01/2004	15/01/2004	A MICRO-ELECTROMECHANICAL SUB-ASSEMBLY	INTERNATIONAL BUSINESS MACHINES CORPORATION	27/04/2007	DELHI
4	266189	4557/DELNP/2007	12/12/2005	13/12/2004	PANCREATIC POLYPEPTIDE FAMILY MOTIFS, POLYPEPTIDES AND METHODS COMPRISING THE SAME	AMYLIN PHARMACEUTICALS, LLC,ASTRAZENECA PHARMACEUTICALS LP	31/08/2007	DELHI
5	266190	1820/DEL/2006	14/08/2006		NOVEL VINYL PYRIDIENE LATEX AND PROCESS FOR PREPARING THE SAME	JUBILANT ORGANOSYS LIMITED	04/04/2008	DELHI
6	266197	1935/DEL/2007	13/09/2007		AN IMPROVED DRIP CHAMBER IN AN INTRAVENOUS FLUID INFUSION SET	TREBHUWAN SINGH RAMAN	11/04/2008	DELHI
7	266204	1742/DELNP/2006	17/09/2004	01/10/2003	A VENT ASSEMBLY FOR A HIGH PRESSURE DIE CASTING SYSTEM	CAST CENTRE PTY LTD.	31/08/2007	DELHI
8	266209	4034/DELNP/2007	30/11/2005	30/11/2004	METHOD AND APPARATUS FOR PRODUCING FIBRE COMPOSITE MOULDINGS BY MEANS OF VACUUM INFUSION	LM GLASFIBER A/S	31/08/2007	DELHI
9	266212	6387/DELNP/2009	03/04/2008	09/04/2007	SOFT HETEROGENEOUS ISOTACTIC POLYPROPYLENE COMPOSITIONS	EXXONMOBIL CHEMICAL PATENTS INC,	11/06/2010	DELHI
10	266218	2879/DELNP/2004	04/04/2003	30/04/2002	A RESILIENT RAILWAY RAIL FASTENING CLIP	PANDROL LIMITED	09/10/2009	DELHI
11	266219	118/DEL/2004	22/01/2004	06/02/2003	UTRASONIC DIAGNOSTIC APPARATUS	GE MEDICAL SYSTEMS GLOBAL TECHNOLOGY COMPANY LLC	10/02/2006	DELHI

Publication Under Section 43(2) in Respect of the Grant

Following Patents have been granted and any person interested in opposing these patents under Section 25(2) may at any time within one year from the date of this issue, give notice to the Controller of Patents at the appropriate office, on the prescribed form-7 along with written statement and evidence, if any.

Serial Number	Patent Number	Application Number	Date of Application	Date of Priority	Title of Invention	Name of Patentee	Date of Publication of Abstract u/s 11(A)	Appropriate Office
1	266185	676/MUMNP/2009	31/10/2007	31/10/2006	APPARATUS AND METHOD FOR SENSOR-BASED WIRELESS RECEIVE DIVERSITY □	QUALCOMM INCORPORATED	22/05/2009	MUMBAI
2	266194	1202/MUMNP/2009	21/12/2007	28/12/2006	BLOCKED MERCAPTOSILANE COUPLING AGENTS, PROCESS FOR MAKING AND USE IN RUBBER COMPOSITIONS	MOMENTIVE PERFORMANCE MATERIALS,INC.	21/08/2009	MUMBAI
3	266196	859/MUMNP/2008	19/10/2006	19/10/2005	HEXOSYCLERAMIDES AS ADJUVANTS AND THEIR USES IN PHARMACEUTICAL COMPOSITIONS	HELMHOLTZ-ZENTRUM FR INFEKTIONSFORSCHUNG GMBH	11/07/2008	MUMBAI
4	266198	572/MUMNP/2008	18/08/2006	29/08/2005	VARIABLE INTEGRATED INDUCTOR	TELEFONAKTIEBOLAGET LM ERICSSON (PUBL)	26/06/2009	MUMBAI
5	266199	2431/MUMNP/2008	11/06/2007	09/06/2006	UNIVERSAL MOBILE PRINT AGENT	QUALCOMM INCORPORATED	20/02/2009	MUMBAI
6	266201	1652/MUMNP/2009	31/03/2008	02/04/2007	ACCELERATOR SOLUTION□	AKZO NOBEL N.V.	14/05/2010	MUMBAI
7	266206	1736/MUMNP/2008	01/03/2007	01/03/2006	DUAL-PATH, MULTIMODE SEQUENTIAL STORAGE ELEMENT	QUALCOMM INCORPORATED	03/10/2008	MUMBAI
8	266207	1173/MUMNP/2008	20/11/2006	18/11/2005	MOBILE SECURITY SYSTEM AND METHOD	QUALCOMM INCORPORATED	11/07/2008	MUMBAI
9	266213	1186/MUM/2005	18/10/2005		DEVELOPMENT AND USE OF RUBBER DISE WITH SOFT RUBBER LAYERS AS MATERIAL FOR SELF-GROOVING ROLLER IN ROLLER GINNING MACHINES	CENTRAL INSTITUTE FOR RESEARCH ON COTTON TECHNOLOGY,MILLENNIUM RUBBER TECHNOLOGIES P. LTD.	13/07/2007	MUMBAI
10	266214	2286/MUM/2007	19/11/2007	22/12/2006	A METHOD AND DEVICE FOR MEASURING USAGE AMOUNT OF CONTENT USED IN THE DEVICE	SAMSUNG ELECTRONICS CO., LTD	05/06/2009	MUMBAI

11	266215	971/MUMNP/2011	16/10/2009	17/10/2008	METHOD FOR PREPARING OXIDATION CATALYST AND CATALYSTS PREPARED BY THE METHOD.	UNIVERZITA KARLOVA V PRAZE	14/10/2011	MUMBAI
12	266216	2625/MUM/2007	04/06/2007	09/06/2006	PROCESS FOR HARDENING STAINLESS STEEL AND MOLTEN SALT BATH FOR REALIZING SAID PROCESS.	DURFERRIT GMBH	15/07/2011	MUMBAI

Publication Under Section 43(2) in Respect of the Grant

Following Patents have been granted and any person interested in opposing these patents under Section 25(2) may at any time within one year from the date of this issue, give notice to the Controller of Patents at the appropriate office, on the prescribed form-7 along with written statement and evidence, if any.

Serial Number	Patent Number	Application Number	Date of Application	Date of Priority	Title of Invention	Name of Patentee	Date of Publication of Abstract u/s 11(A)	Appropriate Office
1	266175	1030/CHENP/2009	24/08/2007	25/08/2006	POLYPROPYLENE FOAM	BOREALIS TECHNOLOGY OY	29/05/2009	CHENNAI
2	266176	1613/CHENP/2007	12/08/2005	20/10/2004	A CLOSING CAP FOR CONTAINERS FILLED WITH MEDICAL LIQUIDS	FRESENIUS KABI DEUTSCHLAND GmbH	31/08/2007	CHENNAI
3	266178	2142/CHE/2008	02/09/2008		A NEW TOPOLOGY AND ITS MANAGEMENT FOR AD HOC WIRELESS NETWORK	DR. MAKAM VENKATA SUBRAMANYAM,DR. KODATI SATYA PRASAD	21/11/2008	CHENNAI
4	266180	1837/CHE/2009	03/08/2009 14:55:36	04/08/2008	FIBER BUNDLE COLLECTING DEVICE FOR SPINNING MACHINE	KABUSHIKI KAISHA TOYOTA JIDOSHOKKI	12/02/2010	CHENNAI
5	266181	1548/CHE/2009	30/06/2009 16:54:43	30/06/2008	SLIDE FASTENER	YKK CORPORATION	06/01/2012	CHENNAI
6	266182	4171/CHENP/2007	22/03/2006	23/03/2005	METHODS AND APPARATUS FOR USING MULTIPLE WIRELESS LINKS WITH A WIRELESS TERMINAL	QUALCOMM INCORPORATED	16/11/2007	CHENNAI
7	266183	1419/CHENP/2008	16/09/2006	22/09/2005	TWIN-ROLL MACHINE, IN PARTICULAR FOR COMMINUTING A BED OF MATERIAL	KHD HUMBOLDT WEDAG GMBH	28/11/2008	CHENNAI
8	266187	1184/CHE/2008	07/12/2007	07/12/2007	NEW METHOD FOR TREATING FRUIT OR VEGETABLES WITH POTASSIUM PHOSPHITE AND CORRESPONDING COMPOSITIONS	XEDA INTERNATIONAL	21/08/2009	CHENNAI
9	266203	123/CHE/2009	20/01/2009		EMERGENCY ESCAPE SYSTEM FOR HIGH RISE BUILDINGS WITH A MECHANISM TO REGULATE THE SPEED OF DESCENT	MANAKKATTU PADEETTATHIL CHACKO DAVID	30/07/2010	CHENNAI
10	266205	701/CHE/2006	18/04/2006	19/04/2005	PROCESS FOR UREA PRODUCTION AND PLANT	UREA CASALE S.A.	22/06/2007	CHENNAI

11	266208	362/CHE/2007	22/02/2007 15:27:42	24/02/2006	PROCESS FOR PREPARING POLYTETRAHYDROFURAN OR TETRAHYDROFURAN COPOLYMERS	BASF AKTIENGESELLSCHAFT	28/11/2008	CHENNAI
12	266210	144/CHENP/2008	09/06/2006	09/06/2005	SMELTING OR REDUCTION FURNACE, ESPECIALLY AN ELECTRIC ARC FURNACE WITH AN OPEN, SEMICLOSED, OR CLOSED CONFIGURATION	SMS Siemag Aktiengesellschaft	19/09/2008	CHENNAI
13	266211	5404/CHENP/2009	12/03/2008	15/03/2007	INTAKE MANIFOLD FOR MULTIPLE-CYLINDER INTERNAL COMBUSTION ENGINE	HONDA MOTOR CO., LTD.,KEIHIN CORPORATION	11/12/2009	CHENNAI
14	266221	2167/CHE/2009	07/09/2009 16:23:16		CLAMPING DEVICE AND METHOD FOR RETAINING AND ORGANIZING AN ELONGATED BODY	SCHNEIDER ELECTRIC INDUSTRIES SAS	11/03/2011	CHENNAI
15	266223	187/CHENP/2008	23/06/2006	14/07/2005	PIGMENT DISPERSIONS WITH POLYMERIC DISPERSANTS HAVING PENDING CHROMOPHORE GROUPS	AGFA GRAPHICS NV	19/09/2008	CHENNAI
16	266224	969/CHENP/2008	29/07/2005	29/07/2005	PH-CONTROLLED PULSATILE DELIVERY SYSTEM, METHODS FOR PREPARATION AND USE THEREOF	STICHTING GRONINGEN CENTRE FOR DRUG RESEARCH	28/11/2008	CHENNAI

Publication Under Section 43(2) in Respect of the Grant

Following Patents have been granted and any person interested in opposing these patents under Section 25(2) may at any time within one year from the date of this issue, give notice to the Controller of Patents at the appropriate office, on the prescribed form-7 along with written statement and evidence, if any.

Serial Number	Patent Number	Application Number	Date of Application	Date of Priority	Title of Invention	Name of Patentee	Date of Publication of Abstract u/s 11(A)	Appropriate Office
1	266179	2096/KOLNP/2009	14/12/2007	15/12/2006	A PROCESS FOR MELTING GLASS AND FURNACE THEREFOR	GDF SUEZ	26/06/2009	KOLKATA
2	266184	1006/KOL/2006	28/09/2006		OPTICAL MEASUREMENT MEANS OF TEMPERATURE / STRESS WITHIN AS HEAT EXCHANGING STRUCTURE.	BHARAT HEAVY ELECTRICALS LIMITED	10/04/2009	KOLKATA
3	266191	1993/KOLNP/2007	09/11/2005	30/11/2004	LANCET DEVICE	BECTON, DICKINSON AND COMPANY	10/08/2007	KOLKATA
4	266192	1089/KOLNP/2008	23/08/2006	25/08/2005	IMPROVED LOW-PRESSURE SCREW COMPRESSOR	ATLAS COPCO AIRPOWER, NAAMLOZE VENNOOTSCHAP	19/12/2008	KOLKATA
5	266193	1104/KOL/2008	25/06/2008	19/07/2007	AN IMPROVED MULTI-SPEED TRANSMISSION TO PROVIDE EIGHT FORWARD SPEED RATIOS AND ONE REVERSE SPEED RATIO	GM GLOBAL TECHNOLOGY OPERATIONS, INC.	24/04/2009	KOLKATA
6	266195	1009/KOLNP/2003	31/01/2002	31/01/2001	A TUBING DEVICE	HEMERUS MEDICAL, LLC.	08/07/2005	KOLKATA
7	266200	396/KOL/2004	05/07/2004		TWO STAGE SIDE BUFFERS FOR RAILWAY ROLLING STOCK	OM PRAKASH TANTIA	23/06/2006	KOLKATA
8	266202	404/KOL/2008	03/03/2008	03/05/2007	METHOD OF OPERATING PLUG-IN HYBRID ELECTRIC VEHICLE	GM GLOBAL TECHNOLOGY OPERATIONS, INC.	03/04/2009	KOLKATA
9	266217	325/KOLNP/2008	20/07/2006	21/07/2005	NOVEL BACTERIUM BELONGING TO THE GENUS BIFIDOBACTERIUM AND UTILIZATION OF THE SAME	KABUSHIKI KAISHA YAKULT HONSHA	26/09/2008	KOLKATA
10	266220	678/KOLNP/2009	23/07/2007	24/07/2006	PREPARATION OF 3-[(1R,2R)-3-(DIMETHYLAMINO)-1ETHYL-2-METHYLPROPYL]PHENOL	GRNENTHAL GMBH	15/05/2009	KOLKATA
11	266222	2671/KOLNP/2010	22/01/2009	25/01/2008	AN INKJET RECORDING INK	RICOH COMPANY, LTD.	01/10/2010	KOLKATA

CONTINUED TO PART- 2

CONTINUED FROM PART- 1

INTRODUCTION

In view of the recent amendment made in the Designs (Amendment) Rules, 2008 with effect from 17/06/2008, Publication of the matter relating to Designs is being published in the Official Journal of The Patent Office. This Journal is being published on weekly basis on every Friday covering the various proceedings on Designs as required according to the provisions of under Rule 22, 25, 27 and 39 of the Design (Amendment) Rules, 2008. All the enquiries on this Official Journal and other information as required by the public should be addressed to the Controller General of Patents, Designs & Trade Marks. Suggestions and comments are requested from all quarters so that the content can be enriched.

COPYRIGHT PUBLICATION

SL NO	REGISTERED DESIGN NUMBERS	RENEWED ON
1.	198727	07.04.2015
2.	198728	07.04.2015
3.	198729	07.04.2015
4.	198730	07.04.2015
5.	198731	07.04.2015
6.	198732	07.04.2015
7.	198733	07.04.2015
8.	198734	07.04.2015
9.	198735	07.04.2015
10.	198736	07.04.2015
11.	198737	07.04.2015
12.	198738	07.04.2015
13.	198739	07.04.2015
14.	198740	07.04.2015
15.	198741	07.04.2015

REGISTRATION OF DESIGNS

The following designs have been registered. They are now open for public inspection. In the following each entry the Date of Registration is shown. The Priority Number, Priority Date and Priority Country are also shown

DESIGN NUMBER	266333
CLASS	05-05
1)M/S. BIBA APPARELS PRIVATE LIMITED, AN INDIAN PRIVATE LIMITED COMPANY INCORPORATED UNDER THE PROVISION OF THE COMPANIES ACT, 1956, AND HAVING ITS'S REGISTERED OFFICE AT RELIABLE HOUSE, SITUATED AT HANUMAN SILK MILL COMPOUND, KANJURMARG (WEST), OPP. HUMA MALL, MUMBAI-400 078 MAHARASHTRA, INDIA.	
DATE OF REGISTRATION	30/09/2014
TITLE	TEXTILE FABRIC
PRIORITY NA	

DESIGN NUMBER	266011
CLASS	28-03
1)MADHAV METAL INDUSTRIES, INDIAN PROPRIETORSHIP FIRM HAVING PRINCIPAL PLACE OF BUSINESS AT 361/4, 49-ROAD, SHANKARTEKRI UDHYOG NAGAR, JAMNAGAR-361004, GUJARAT, INDIA AND HAVING PROPRIETOR DIPESHBHAI DHIRAJLAL SABHAYA, RESIDING AT ''MADHAV VRUVD'', JAY SOCIETY STREET NO. 03, BAPASITARAM CHOWK, B/H. KRUSHNA NAGAR, JAMNAGAR, INDIAN NATIONALS	
DATE OF REGISTRATION	25/09/2014
TITLE	HOLDER FOR RAZOR
PRIORITY NA	

DESIGN NUMBER	264975
CLASS	12-16
1)MINDA INDUSTRIES LIMITED (SWITCH-DIVISION), AN INDIAN COMPANY OF VIII. NAWADA FATEPUR, P.O. SIKANDERPUR BADDA, MANESAR, DISTT. GURGAON, HARYANA-122004, INDIA	
DATE OF REGISTRATION	22/08/2014
TITLE	MODULAR SWITCH FOR VEHICLE
PRIORITY NA	

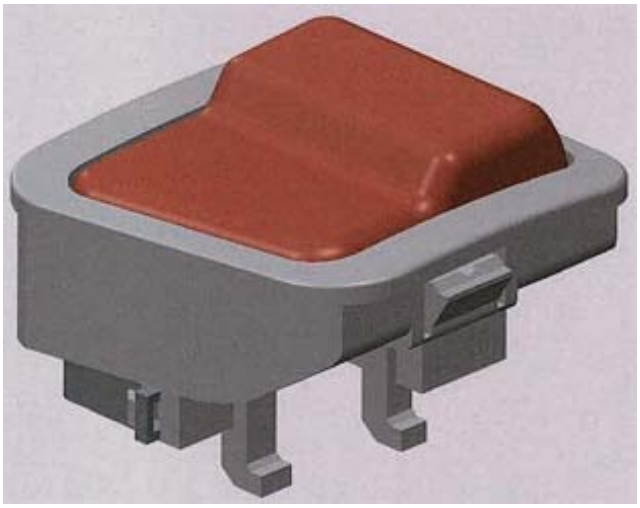

DESIGN NUMBER	265590
CLASS	02-02

1)RAMSON EXPORTS (INDIA), 808, STREET NO. 2, SHANKER LANE, GURU VIHAR, RAHON ROAD, LUDHIANA-141007 (PUNJAB), INDIA,
AN INDIAN PROPRIETORSHIP FIRM WHOSE PARTNERS ARE:- ARJUN SOOD AND KARUNA SOOD BEING INDIAN NATIONALS OF THE ABOVE ADDRESS

DATE OF REGISTRATION	10/09/2014
TITLE	T-SHIRT

PRIORITY NA

DESIGN NUMBER	266339
CLASS	05-05

1)M/S. BIBA APPARELS PRIVATE LIMITED, AN INDIAN PRIVATE LIMITED COMPANY INCORPORATED UNDER THE PROVISION OF THE COMPANIES ACT, 1956, AND HAVING ITS'S REGISTERED OFFICE AT RELIABLE HOUSE, SITUATED AT
HANUMAN SILK MILL COMPOUND, KANJURMARG (WEST), OPP. HUMA MALL, MUMBAI-400 078 MAHARASHTRA, INDIA.

DATE OF REGISTRATION	30/09/2014
TITLE	TEXTILE FABRIC

PRIORITY NA

DESIGN NUMBER	264276
CLASS	08-06

1)KAPILBHAI BALVANTRAI VYAS AND JIGNESHBHAI CHHAGANBHAI GOHEL BOTH INDIAN NATIONAL PARTNER OF RATNAPRABHA HARDWARE AN INDIAN PARTNERSHIP FIRM HAVING ITS PRINCIPAL PLACE OF BUSINESS AT ADDRESS:-
6, PARSANA SOCIETY, 50 FEET ROAD, KOTHARIYA MAIN ROAD, RAJKOT-2. GUJARAT-INDIA

DATE OF REGISTRATION	28/07/2014
TITLE	HANDLE

PRIORITY NA

DESIGN NUMBER	265382
CLASS	09-01
1)MUKESH KHANNA, SOLE PROPRIETOR OF PINAAZ PERSONAL CARE WHOSE ADDRESS IS PLOT NO. 45, POCKET H, SECTOR-5, BAWANA INDUSTRIAL AREA, DELHI-110039, INDIA AN INDIAN NATIONAL OF ABOVE ADDRESS	
DATE OF REGISTRATION	03/09/2014
TITLE	BOTTLE
PRIORITY NA	

DESIGN NUMBER	261805
CLASS	15-09
1)LEISTER TECHNOLOGIES AG OF GALILEO-STRASSE 10, 6056 KAEGISWIL, SWITZERLAND, SWISS COMPANY	
DATE OF REGISTRATION	16/04/2014
TITLE	WELDING MACHINE FOR PLASTIC SHEETS

PRIORITY

PRIORITY NUMBER	DATE	COUNTRY
002424697-0002	13/03/2014	OHIM

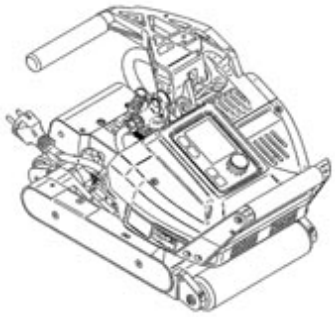

DESIGN NUMBER	266336
CLASS	05-05
1)M/S. BIBA APPARELS PRIVATE LIMITED, AN INDIAN PRIVATE LIMITED COMPANY INCORPORATED UNDER THE PROVISION OF THE COMPANIES ACT, 1956, AND HAVING ITS'S REGISTERED OFFICE AT RELIABLE HOUSE, SITUATED AT HANUMAN SILK MILL COMPOUND, KANJURMARG (WEST), OPP. HUMA MALL, MUMBAI-400 078 MAHARASHTRA, INDIA.	
DATE OF REGISTRATION	30/09/2014
TITLE	TEXTILE FABRIC
PRIORITY NA	

DESIGN NUMBER	266125
CLASS	15-07
1)LG ELECTRONICS INC. 128, YEOUI-DAERO, YEONGDEUNGPO-GU, SEOUL, 150-721, REPUBLIC OF KOREA A CORPORATION INCORPORATED UNDER THE LAWS OF THE REPUBLIC OF KOREA	
DATE OF REGISTRATION	26/09/2014
TITLE	REFRIGERATOR
PRIORITY	

PRIORITY NUMBER	DATE	COUNTRY
30-2014-0015470	27/03/2014	REPUBLIC OF KOREA

DESIGN NUMBER	264983
CLASS	09-07
1)ESSEL PROPACK LIMITED A COMPANY ORGANIZED AND EXISTING UNDER THE LAWS OF INDIAN, HAVING ITS OFFICE AT 10TH FLOOR, TIMES TOWER, KAMALA CITY, SENAPATI BAPAT MARG, LOWER PAREL, MUMBAI, MAHARASHTRA 400013, INDIA	
DATE OF REGISTRATION	22/08/2014
TITLE	CAP FOR DISPENSING AND APPLYING A FLUID
PRIORITY NA	

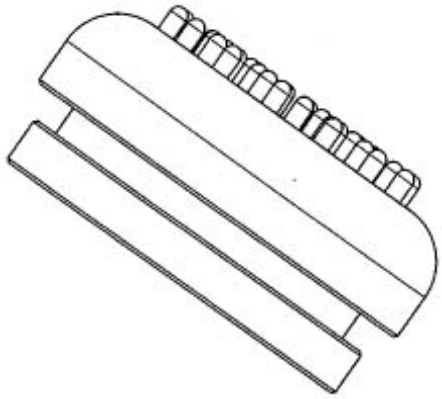

DESIGN NUMBER	261001
CLASS	07-02
1)1. MR. BINOD KUMAR GUPTA, OF THANA ROAD, CHAKRADHARPUR-833102, WEST SINGHBHUM (JHARKHAND), INDIA, AN INDIAN CITIZEN. 2. MR. GANESH PRASAD VISHWAKARMA, OF NEAR SANTOSHI MANDIR, CHAKRADHARPUR-833102-WEST SINGHBHUM (JHARKHAND), INDIA, AN INDIAN CITIZEN	
DATE OF REGISTRATION	14/03/2014
TITLE	COOKING STOVE
PRIORITY NA	

DESIGN NUMBER	263738
CLASS	23-01
1)SAINT-GOBAIN PERFORMANCE PLASTICS CORPORATION, 1199 SOUTH CHILLICOTHE ROAD, AURORA, OH 44202 US, A COMPANY OF USA	
DATE OF REGISTRATION	27/06/2014
TITLE	FLUID FLOW SINKER

PRIORITY

PRIORITY NUMBER	DATE	COUNTRY
29/478,106	31/12/2013	U.S.A.

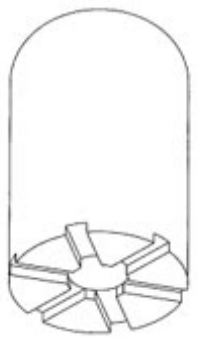

DESIGN NUMBER	261759
CLASS	15-01
1)WÄRTSILÄ FINLAND OY, (A COMPANY EXISTING UNDER THE LAWS OF FINLAND), HAVING ITS OFFICE AT TARHAAJANTIE 2, 65380 VAASA, FINLAND	
DATE OF REGISTRATION	15/04/2014
TITLE	ENGINE COMPONENT

PRIORITY

PRIORITY NUMBER	DATE	COUNTRY
002325597-0004	14/10/2013	OHIM

DESIGN NUMBER	265675
CLASS	09-07
1)PRABH DAYAL OM PARKASH INFRASTRUCTURE (P) LTD., 2880 SIRKIWALAN, HAUZ QAZI, DELHI-110006, INDIA, AN INDIAN COMPANY REGISTERED UNDER THE PROVISIONS OF INDIAN COMPANIES ACT, 1956, OF THE ABOVE ADDRESS	
DATE OF REGISTRATION	15/09/2014
TITLE	WATER TANK LID
PRIORITY NA	

DESIGN NUMBER	266332
CLASS	05-05
1)M/S. BIBA APPARELS PRIVATE LIMITED, AN INDIAN PRIVATE LIMITED COMPANY INCORPORATED UNDER THE PROVISION OF THE COMPANIES ACT, 1956, AND HAVING ITS'S REGISTERED OFFICE AT RELIABLE HOUSE, SITUATED AT HANUMAN SILK MILL COMPOUND, KANJURMARG (WEST), OPP. HUMA MALL, MUMBAI-400 078 MAHARASHTRA, INDIA.	
DATE OF REGISTRATION	30/09/2014
TITLE	TEXTILE FABRIC
PRIORITY NA	

DESIGN NUMBER	264971
CLASS	13-03
1)HAVELLS INDIA LIMITED, AN INDIAN, HAVING REGISTERED OFFICE AT 1, RAJ NARAIN MARG, CIVIL LINES, DELHI 110054.	
DATE OF REGISTRATION	22/08/2014
TITLE	CIRCUIT BREAKER
PRIORITY NA	

DESIGN NUMBER	260960
CLASS	10-04
1) JNS INSTRUMENTS LIMITED (A REGISTERED INDIAN COMPANY HAVING A REGISTERED LEGAL ADDRESS OF G.I.-48, G T KARNAL ROAD INDUSTRIAL AREA, DELHI, INDIA), RAJESH SINGH, GOPAL SHARMA, GAURAV SARASWAT AND ARUN KUMAR SHARMA	
DATE OF REGISTRATION	14/03/2014
TITLE	LIQUID CRYSTAL PANEL DISPLAY FOR SPEEDOMETER
PRIORITY NA	

DESIGN NUMBER	265301	
CLASS	09-01	
1)UNITED SPIRITS LIMITED, 'UB TOWER', 24, VITTAL MALLYA ROAD, BANGALORE-560001, INDIA, AN INDIAN COMPANY		
DATE OF REGISTRATION	01/09/2014	
TITLE	BOTTLE	
PRIORITY NA		
DESIGN NUMBER	265682	
CLASS	11-05	
1)SEET KAMAL INTERNATIONAL OF 3A, KAMANI ROAD, JHOTWARA INDUSTRIAL AREA, JAIPUR-302013 (RAJASTHAN), INDIA, AN INDIAN PROPRIETORSHIP FIRM WHOSE PROPRIETOR IS GAUTAM NATHANY, INDIAN NATIONAL OF ABOVE ADDRESS		
DATE OF REGISTRATION	15/09/2014	
TITLE	FESTIVE DECORATIONS	
PRIORITY NA		
DESIGN NUMBER	265875	
CLASS	02-02	
1)CHHAGANRAJ MULTANMAL JAIN, ADULT, AN INDIAN INHABITANT, A SOLE PROPRIETOR OF M/S. SHREE GANPATHI SILK, HAVING ADDRESS AT E-361-362, RADHA KRISHNA TEXTILE MARKET, RING ROAD, SURAT-395002, GUJARAT STATE, INDIA		
DATE OF REGISTRATION	23/09/2014	
TITLE	GARMENT	
PRIORITY NA		

DESIGN NUMBER	265589	
CLASS	02-02	
1)RAMSON EXPORTS (INDIA), 808, STREET NO. 2, SHANKER LANE, GURU VIHAR, RAHON ROAD, LUDHIANA-141007 (PUNJAB), INDIA, AN INDIAN PROPRIETORSHIP FIRM WHOSE PARTNERS ARE:- ARJUN SOOD AND KARUNA SOOD BEING INDIAN NATIONALS OF THE ABOVE ADDRESS		
DATE OF REGISTRATION	10/09/2014	
TITLE	T-SHIRT	
PRIORITY NA		
DESIGN NUMBER	266338	
CLASS	05-05	
1)M/S. BIBA APPARELS PRIVATE LIMITED, AN INDIAN PRIVATE LIMITED COMPANY INCORPORATED UNDER THE PROVISION OF THE COMPANIES ACT, 1956, AND HAVING ITS'S REGISTERED OFFICE AT RELIABLE HOUSE, SITUATED AT HANUMAN SILK MILL COMPOUND, KANJURMARG (WEST), OPP. HUMA MALL, MUMBAI-400 078 MAHARASHTRA, INDIA.		
DATE OF REGISTRATION	30/09/2014	
TITLE	TEXTILE FABRIC	
PRIORITY NA		
DESIGN NUMBER	262697	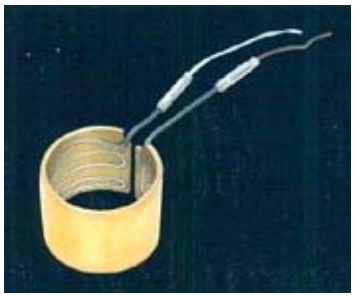
CLASS	23-03	
1)BHARAT HEATERS INDUSTRIES, 18-B, D.D.A. FLAT, L.I.G., JHILMIL, SHAHDARA, DELHI-110095, INDIA. (AN INDIAN PROPRIETORSHIP FIRM WHOSE PROPRIETOR IS:- SH. KAMAL VERMA AN INDIAN NATIONAL OF THE ABOVE ADDRESS		
DATE OF REGISTRATION	19/05/2014	
TITLE	NOZZEL COIL FOR HEATER	
PRIORITY NA		

DESIGN NUMBER	264985
CLASS	09-07
1)ESSEL PROPACK LIMITED A COMPANY ORGANIZED AND EXISTING UNDER THE LAWS OF INDIAN, HAVING ITS OFFICE AT 10TH FLOOR, TIMES TOWER, KAMALA CITY, SENAPATI BAPAT MARG, LOWER PAREL, MUMBAI, MAHARASHTRA 400013, INDIA	
DATE OF REGISTRATION	22/08/2014
TITLE	CAP FOR DISPENSING AND APPLYING A FLUID
PRIORITY NA	

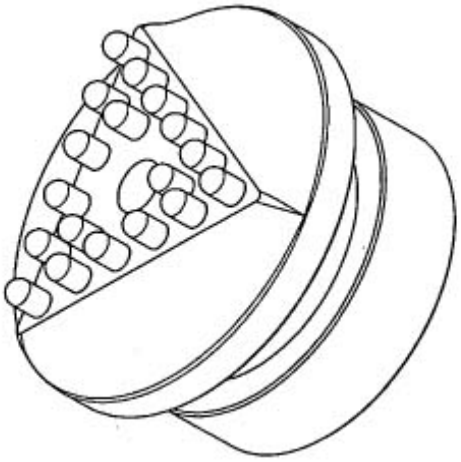

DESIGN NUMBER	265381
CLASS	09-01
1)MUKESH KHANNA, SOLE PROPRIETOR OF PINAAZ PERSONAL CARE WHOSE ADDRESS IS PLOT NO. 45, POCKET H, SECTOR-5, BAWANA INDUSTRIAL AREA, DELHI-110039, INDIA AN INDIAN NATIONAL OF ABOVE ADDRESS	
DATE OF REGISTRATION	03/09/2014
TITLE	BOTTLE
PRIORITY NA	

DESIGN NUMBER	261762
CLASS	15-01
1)WÄRTSILÄ FINLAND OY, (A COMPANY EXISTING UNDER THE LAWS OF FINLAND), HAVING ITS OFFICE AT TARHAAJANTIE 2, 65380 VAASA, FINLAND	
DATE OF REGISTRATION	15/04/2014
TITLE	ENGINE COMPONENT

PRIORITY

PRIORITY NUMBER	DATE	COUNTRY
002325597-0009	14/10/2013	OHIM

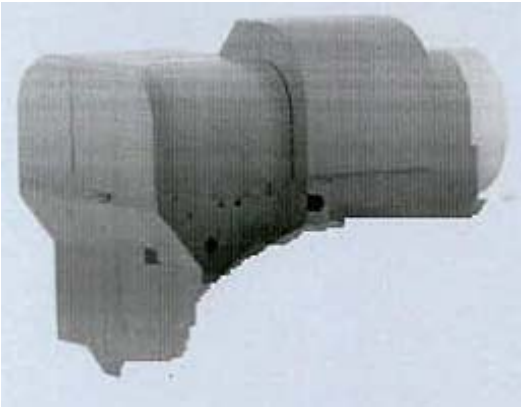

DESIGN NUMBER	265587
CLASS	02-02

1)RAMSON EXPORTS (INDIA), 808, STREET NO. 2, SHANKER LANE, GURU VIHAR, RAHON ROAD, LUDHIANA-141007 (PUNJAB), INDIA,
AN INDIAN PROPRIETORSHIP FIRM WHOSE PARTNERS ARE:- ARJUN SOOD AND KARUNA SOOD BEING INDIAN NATIONALS OF THE ABOVE ADDRESS

DATE OF REGISTRATION	10/09/2014
TITLE	T-SHIRT

PRIORITY NA

DESIGN NUMBER	266337
CLASS	05-05

1)M/S. BIBA APPARELS PRIVATE LIMITED, AN INDIAN PRIVATE LIMITED COMPANY INCORPORATED UNDER THE PROVISION OF THE COMPANIES ACT, 1956, AND HAVING ITS'S REGISTERED OFFICE AT RELIABLE HOUSE, SITUATED AT
HANUMAN SILK MILL COMPOUND, KANJURMARG (WEST), OPP. HUMA MALL, MUMBAI-400 078 MAHARASHTRA, INDIA.

DATE OF REGISTRATION	30/09/2014
TITLE	TEXTILE FABRIC

PRIORITY NA

DESIGN NUMBER	264764
CLASS	22-06

1)KHOSE, VIVEK DASHRATRAO RESIDING AT
GAJANAN HOUSING SOCIETY, NEPTI ROAD, KARLE MALA KEDGAON, AHMEDNAGAR MH-414005, AN INDIAN NATIONAL.

DATE OF REGISTRATION	14/08/2014
TITLE	ANIMAL TRAP

PRIORITY NA

DESIGN NUMBER	264984
CLASS	09-07
1)ESSEL PROPACK LIMITED A COMPANY ORGANIZED AND EXISTING UNDER THE LAWS OF INDIAN, HAVING ITS OFFICE AT 10TH FLOOR, TIMES TOWER, KAMALA CITY, SENAPATI BAPAT MARG, LOWER PAREL, MUMBAI, MAHARASHTRA 400013, INDIA	
DATE OF REGISTRATION	22/08/2014
TITLE	CAP FOR DISPENSING AND APPLYING A FLUID
PRIORITY NA	

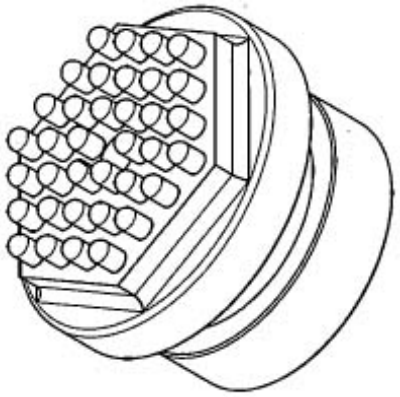

DESIGN NUMBER	265152
CLASS	13-03
1)HAVELLS INDIA LIMITED AN INDIAN NATIONAL COMPANY, HAVING REGISTERED OFFICE AT 1, RAJ NARAIN MARG, CIVIL LINES, DELHI 110054.	
DATE OF REGISTRATION	26/08/2014
TITLE	MINIATURE CIRCUIT BREAKER
PRIORITY NA	

DESIGN NUMBER	261760
CLASS	15-01
1)WÄRTSILÄ FINLAND OY, (A COMPANY EXISTING UNDER THE LAWS OF FINLAND), HAVING ITS OFFICE AT TARHAAJANTIE 2, 65380 VAASA, FINLAND	
DATE OF REGISTRATION	15/04/2014
TITLE	ENGINE COMPONENT

PRIORITY

PRIORITY NUMBER	DATE	COUNTRY
002325597-0006	14/10/2013	OHIM

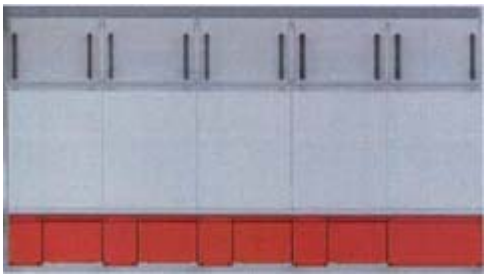

DESIGN NUMBER	266334
CLASS	05-05

1)M/S. BIBA APPARELS PRIVATE LIMITED, AN INDIAN PRIVATE LIMITED COMPANY INCORPORATED UNDER THE PROVISION OF THE COMPANIES ACT, 1956, AND HAVING ITS'S REGISTERED OFFICE AT RELIABLE HOUSE, SITUATED AT
HANUMAN SILK MILL COMPOUND, KANJURMARG (WEST), OPP. HUMA MALL, MUMBAI-400 078 MAHARASHTRA, INDIA.

DATE OF REGISTRATION	30/09/2014
TITLE	TEXTILE FABRIC

PRIORITY NA

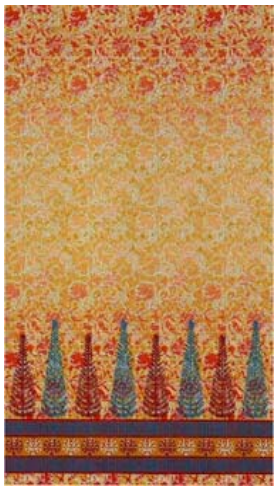

DESIGN NUMBER	266012
CLASS	28-03

1)MADHAV METAL INDUSTRIES, INDIAN PROPRIETORSHIP FIRM HAVING PRINCIPAL PLACE OF BUSINESS AT 361/4, 49-ROAD, SHANKARTEKRI UDHYOG NAGAR, JAMNAGAR-361004, GUJARAT, INDIA AND HAVING PROPRIETOR DIPESHBHAI DHIRAJLAL SABHAYA, RESIDING AT
''MADHAV VRUVD'', JAY SOCIETY STREET NO. 03, BAPASITARAM CHOWK, B/H. KRUSHNA NAGAR, JAMNAGAR, INDIAN NATIONALS

DATE OF REGISTRATION	25/09/2014
TITLE	HOLDER FOR TOOTHBRUSH AND RAZOR

PRIORITY NA

DESIGN NUMBER	261758
CLASS	15-01

1)WÄRTSILÄ FINLAND OY, (A COMPANY EXISTING UNDER THE LAWS OF FINLAND), HAVING ITS OFFICE AT
TARHAAJANTIE 2, 65380 VAASA, FINLAND

DATE OF REGISTRATION	15/04/2014
TITLE	ENGINE

PRIORITY

PRIORITY NUMBER	DATE	COUNTRY
002325597-0002	14/10/2013	OHIM

DESIGN NUMBER	265722
CLASS	23-01
1)MASCO CORPORATION OF INDIANA, AN INDIANA CORPORATION, OF THE ADDRESS 55 EAST 111TH STREET, INDIANAPOLIS, INDIANA 46280	
DATE OF REGISTRATION	16/09/2014
TITLE	FAUCET HANDLE
PRIORITY	

PRIORITY NUMBER	DATE	COUNTRY
29/488,862	24/04/2014	U.S.A.

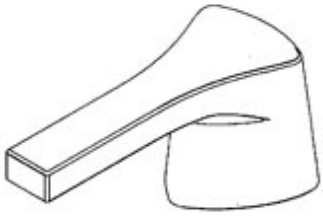

DESIGN NUMBER	259706
CLASS	12-16
1)HERO MOTOCORP LIMITED, AN INDIAN COMPANY INCORPORATED UNDER THE COMPANIES ACT, HAVING ITS OFFICE AT 34, COMMUNITY CENTRE, BASANT LOK, VASANT VIHAR, NEW DELHI-110057	
DATE OF REGISTRATION	27/01/2014
TITLE	MIRROR USED FOR VEHICLE
PRIORITY NA	

DESIGN NUMBER	266284
CLASS	05-05
1)M/S. BIBA APPARELS PRIVATE LIMITED, AN INDIAN PRIVATE LIMITED COMPANY INCORPORATED UNDER THE PROVISION OF THE COMPANIES ACT, 1956, AND HAVING ITS'S REGISTERED OFFICE AT RELIABLE HOUSE, SITUATED AT HANUMAN SILK MILL COMPOUND, KANJURMARG (WEST), OPP. HUMA MALL, MUMBAI-400 078 MAHARASHTRA, INDIA.	
DATE OF REGISTRATION	30/09/2014
TITLE	TEXTILE FABRIC
PRIORITY NA	

DESIGN NUMBER	263829
CLASS	15-02
1)M/S. VGS INDUSTRIES, THROUGH SHRI VIVEK KHULLAR, PARTNER, 2362, MIE, BAHADURGARH, HARYANA-124507, INDIA, INDIAN	
DATE OF REGISTRATION	02/07/2014
TITLE	SUBMERSIBLE PUMP
PRIORITY NA	

DESIGN NUMBER	263876
CLASS	08-05
1)SULZER MIXPAC AG, OF RÜTISTRAßE 7, 9469 HAAG (RHEINTAL), SWITZERLAND	
DATE OF REGISTRATION	04/07/2014
TITLE	LISCHARGE DEVICE

PRIORITY

PRIORITY NUMBER	DATE	COUNTRY
002381236	07/01/2014	OHIM

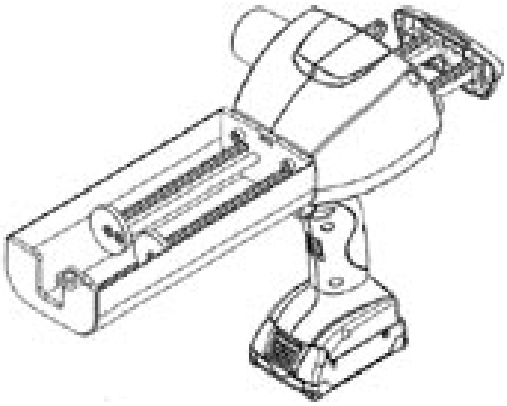

DESIGN NUMBER	265798
CLASS	09-03
1)NAYASA SUPERPLAST OF SURVEY NO. 370/2 (7) KACHIGAM, NANI DAMAN, DAMAN-396210, (UNION TERRITORIES), INDIA, INDIAN PARTNERSHIP FIRM, WHOSE PARTNERS ARE SACHIN SACHDEV & MANASI SACHDEV, ALL INDIAN NATIONALS	
DATE OF REGISTRATION	22/09/2014
TITLE	CONTAINER WITH LID
PRIORITY NA	

DESIGN NUMBER	266350
CLASS	12-16
1)BAJAJ AUTO LIMITED, AN INDIAN COMPANY, INCORPORATED UNDER THE COMPANIES ACT OF 1956, HAVING ITS PRINCIPAL PLACE OF BUSINESS AT NEW 2ND & 3RD FLOOR, KHIVRAJ BUILDING, NO. 616, ANNASALAI, CHENNAI - 600006, STATE OF TAMIL NADU, INDIA, AND REGISTERED OFFICE AT AKURDI, PUNE-411 035, STATE OF MAHARASHTRA, INDIA	
DATE OF REGISTRATION	30/09/2014
TITLE	WHEEL RIM FOR VEHICLE
PRIORITY NA	

DESIGN NUMBER	263451
CLASS	12-08
1)AUTOMOBILI LAMBORGHINI S.P.A., VIA MODENA 12, 40019 SANT' AGATA BOLOGNESE (BO), ITALY, NATIONALITY: ITALY	
DATE OF REGISTRATION	17/06/2014
TITLE	CAR

PRIORITY

PRIORITY NUMBER	DATE	COUNTRY
2374330-0001	19/12/2013	OHIM

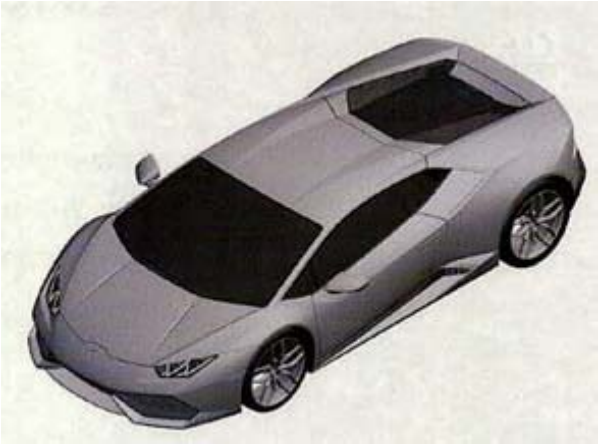

DESIGN NUMBER	263281
CLASS	02-02
1)GOODPEOPLE CLOTHING COMPANY PVT. LTD., B 305, II FLOOR, OKHLA INDUSTRIAL AREA PHASE I, NEW DELHI-110020, INDIA, A CORPORATION ORGANISED AND EXISTING UNDER THE LAWS OF INDIA	
DATE OF REGISTRATION	12/06/2014
TITLE	POCKET USED IN JEANS
PRIORITY NA	

DESIGN NUMBER	262597
CLASS	24-01

1)QINGDAO BRIGHT MEDICAL MANUFACTURING CO., LTD., NATIONALITY: CHINA ADDRESS AT
3F, BLDG 10 NO. 98 LIAONING ROAD, SHIBEI QINGDAO, SHANDONG 266012, CHINA.

DATE OF REGISTRATION	15/05/2014
TITLE	ELECTROCARDIO ELECTRODE

PRIORITY

PRIORITY NUMBER	DATE	COUNTRY
201330571029.1	25/11/2013	CHINA

DESIGN NUMBER	262822
CLASS	31-00

1)SIDDHARTHA ENTERPRISES, AN INDIAN COMPANY REGISTERED UNDER THE COMPANIES ACT, 1956 HAVING ITS REGISTERED OFFICE AT
37/3, GOWDANPALYA, SUBRAMANYAPURA MAIN ROAD, BENGALURU-560061, INDIA; NATIONALITY: INDIA

DATE OF REGISTRATION	22/05/2014
TITLE	MIXER JAR

PRIORITY NA

DESIGN NUMBER	264782
CLASS	25-01

1)NEXUS COUPLERS PTY LTD, A COMPANY INCORPORATED IN AUSTRALIA HAVING ADDRESS AS
9 WALTERS STREET, GLEN APLIN QLD 4381, AUSTRALIA

DATE OF REGISTRATION	14/08/2014
TITLE	REINFORCING BAR COUPLER

PRIORITY

PRIORITY NUMBER	DATE	COUNTRY
10755/2014	18/02/2014	AUSTRALIA

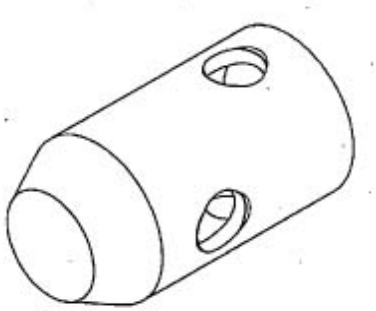

DESIGN NUMBER	264319
CLASS	25-02

1)YKK AP INC., A JAPANESE CORPORATION OF
1, KANDAIZUMI-CHO, CHIYODA-KU, TOKYO 101-8642, JAPAN

DATE OF REGISTRATION	28/07/2014
TITLE	FITTING FOR WINDOW FRAME

PRIORITY

PRIORITY NUMBER	DATE	COUNTRY
14-00410-0101	31/03/2014	MALAYSIA

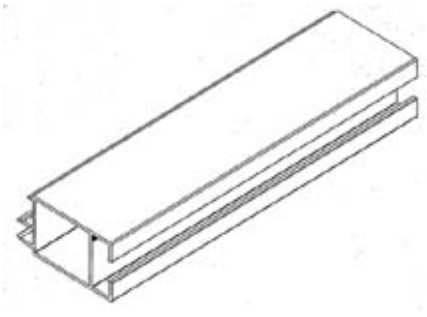

DESIGN NUMBER	260913
CLASS	09-01

1)TEISSEIRE FRANCE SAS, A FRENCH COMPANY OF
482 AV AMBROIZE CROIZAT, BP 50001, F 38926 CROLLES, CEDEX, FRANCE

DATE OF REGISTRATION	11/03/2014
TITLE	BOTTLE

PRIORITY

PRIORITY NUMBER	DATE	COUNTRY
001383087	11/09/2013	OHIM

DESIGN NUMBER	263604
CLASS	14-03

1)BINGO TECHNOLOGIES PVT. LTD., AN INDIAN COMPANY INCORPORATED UNDER THE INDIAN COMPANIES ACT, 1956, HAVING ITS ADDRESS AT
1206 A, TOWER-1, PEARL OMAXE, NETAJI SUBHASH PLACE, DISTT. CENTER, PITAMPURA, NEW DELHI-110 034, INDIA

DATE OF REGISTRATION	23/06/2014
TITLE	MOBILE PHONE

PRIORITY NA

DESIGN NUMBER	261897
CLASS	09-01
1)N. SRINIVASULU, AN INDIAN NATIONAL OF M/S. PRIYANKA MINERAL WATER WORKS, D/NO. 8/196, DUDALAKALUVA, GUDUR, S.P.S.R., NELLORE(DIST.), ANDHRA PRADESH 524101	
DATE OF REGISTRATION	21/04/2014
TITLE	BOTTLE
PRIORITY NA	

DESIGN NUMBER	264021
CLASS	12-16
1)MINDA INDUSTRIES LIMITED (SWITCH-DIVISION), AN INDIAN COMPANY OF VIII. NAWADA FATEPUR, P.O. SIKANDERPUR BADDA, MANESAR, DISTT. GURGAON, HARYANA-122004, INDIA	
DATE OF REGISTRATION	15/07/2014
TITLE	MODULAR SWITCH FOR VEHICLE
PRIORITY NA	

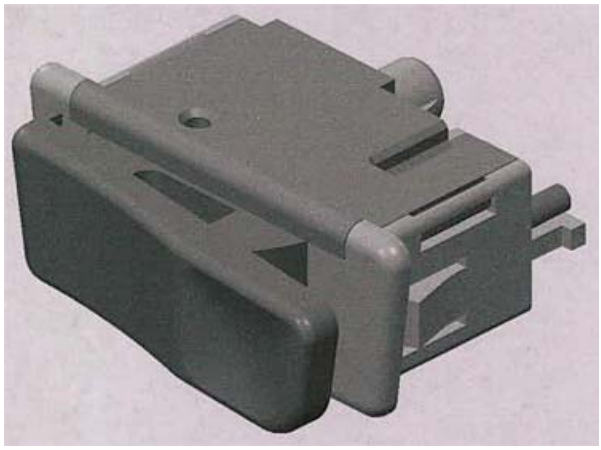

DESIGN NUMBER	265799
CLASS	07-99
1)NAYASA SUPERPLAST OF SURVEY NO. 370/2 (7) KACHIGAM, NANI DAMAN, DAMAN-396210, (UNION TERRITORIES), INDIA, INDIAN PARTNERSHIP FIRM, WHOSE PARTNERS ARE SACHIN SACHDEV & MANASI SACHDEV, ALL INDIAN NATIONALS	
DATE OF REGISTRATION	22/09/2014
TITLE	TRAY
PRIORITY NA	

DESIGN NUMBER	266434
CLASS	08-06
1)VITTORIA DESIGNS PVT. LTD., (A COMPANY INCORPORATED UNDER THE COMPANIES ACT, 1956) HAVING ITS PRINCIPAL PLACE OF BUSINESS AT ADDRESS: 2, MANINAGAR, NEAR ASHOK GARDEN, MAVDI PLOT, RAJKOT, GUJARAT-INDIA	
DATE OF REGISTRATION	07/10/2014
TITLE	HANDLE
PRIORITY NA	

DESIGN NUMBER	266287
CLASS	05-05
1)M/S. BIBA APPARELS PRIVATE LIMITED, AN INDIAN PRIVATE LIMITED COMPANY INCORPORATED UNDER THE PROVISION OF THE COMPANIES ACT, 1956, AND HAVING ITS'S REGISTERED OFFICE AT RELIABLE HOUSE, SITUATED AT HANUMAN SILK MILL COMPOUND, KANJURMARG (WEST), OPP. HUMA MALL, MUMBAI-400 078 MAHARASHTRA, INDIA.	
DATE OF REGISTRATION	30/09/2014
TITLE	TEXTILE FABRIC
PRIORITY NA	

DESIGN NUMBER	262834
CLASS	06-11
1)MR. MAHESH KUMAR CHOUDHARY AND MRS. BASU DEVI CHOUDHARY, BOTH INDIAN DIRECTORS, TRADING AS M/S SARASWATI GLOBAL PVT. LTD., AN INDIAN COMPANY OF 3, GANESH COLONY, BEHIND GOLIMAR GARDEN, AMER ROAD, JAIPUR-302002, RAJASTHAN, INDIA.	
DATE OF REGISTRATION	23/05/2014
TITLE	CARPET
PRIORITY NA	

DESIGN NUMBER	264320
CLASS	25-02
1)YKK AP INC., A JAPANESE CORPORATION OF 1, KANDAIZUMI-CHO, CHIYODA-KU, TOKYO 101-8642, JAPAN	
DATE OF REGISTRATION	28/07/2014
TITLE	FITTING FOR WINDOW FRAME
PRIORITY	

PRIORITY NUMBER	DATE	COUNTRY
14-00412-0101	31/03/2014	MALAYSIA

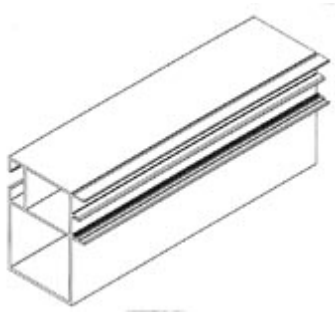

DESIGN NUMBER	264022
CLASS	12-16
1)MINDA INDUSTRIES LIMITED (SWITCH-DIVISION), AN INDIAN COMPANY OF VIII. NAWADA FATEPUR, P.O. SIKANDERPUR BADDA, MANESAR, DISTT. GURGAON, HARYANA-122004, INDIA	
DATE OF REGISTRATION	15/07/2014
TITLE	HANDLE BAR SWITCH FOR VEHICLE
PRIORITY NA	

DESIGN NUMBER	266435
CLASS	08-06
1)VITTORIA DESIGNS PVT. LTD., (A COMPANY INCORPORATED UNDER THE COMPANIES ACT, 1956) HAVING ITS PRINCIPAL PLACE OF BUSINESS AT ADDRESS: 2, MANINAGAR, NEAR ASHOK GARDEN, MAVDI PLOT, RAJKOT, GUJARAT-INDIA	
DATE OF REGISTRATION	07/10/2014
TITLE	HANDLE
PRIORITY NA	

DESIGN NUMBER	265800	
CLASS	07-01	
1)NAYASA SUPERPLAST OF SURVEY NO. 370/2 (7) KACHIGAM, NANI DAMAN, DAMAN-396210, (UNION TERRITORIES), INDIA, INDIAN PARTNERSHIP FIRM, WHOSE PARTNERS ARE SACHIN SACHDEV & MANASI SACHDEV, ALL INDIAN NATIONALS		
DATE OF REGISTRATION	22/09/2014	
TITLE	ICECREAM CUP	
PRIORITY NA		

DESIGN NUMBER	265852	
CLASS	08-06	
1)GODREJ & BOYCE MFG. CO. LTD. OF LOCKS DIVISION (PLANT-18), PIROJSHANAGAR, VIKHROLI, MUMBAI - 400079, MAHARASHTRA, INDIA, INDIAN COMPANY		
DATE OF REGISTRATION	23/09/2014	
TITLE	HANDLE	
PRIORITY NA		

DESIGN NUMBER	266288	
CLASS	05-05	
1)M/S. BIBA APPARELS PRIVATE LIMITED, AN INDIAN PRIVATE LIMITED COMPANY INCORPORATED UNDER THE PROVISION OF THE COMPANIES ACT, 1956, AND HAVING ITS'S REGISTERED OFFICE AT RELIABLE HOUSE, SITUATED AT HANUMAN SILK MILL COMPOUND, KANJURMARG (WEST), OPP. HUMA MALL, MUMBAI-400 078 MAHARASHTRA, INDIA.		
DATE OF REGISTRATION	30/09/2014	
TITLE	TEXTILE FABRIC	
PRIORITY NA		

DESIGN NUMBER	264568
CLASS	24-02

1)MANI, INC.,
8-3 KIYOHARA INDUSTRIAL PARK, UTSUNOMIYA TOCHIGI, 321-3231, JAPAN, NATIONALITY-JAPAN

DATE OF REGISTRATION	07/08/2014
TITLE	KNIFE WITH COVER

PRIORITY

PRIORITY NUMBER	DATE	COUNTRY
2014-003246	18/02/2014	JAPAN

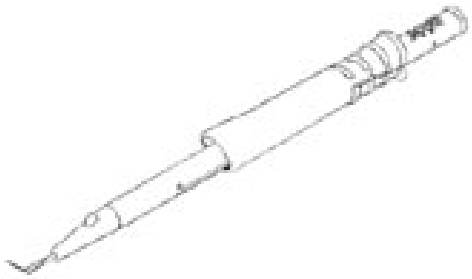

DESIGN NUMBER	263148
CLASS	12-12

1)(I) ARTIFICIAL LIMBS MANUFACTURING CORPORATION OF INDIA (A GOVT. OF INDIA UNDERTAKING), (UNDER MINISTRY OF SOCIAL JUSTICE & EMPOWERMENT), G. T. ROAD, KANPUR-209017, STATE : UTTAR PRADESH, COUNTRY : INDIA AND (II) DR. ONKAR SINGH,
HARCOURT BUTLER TECHNOLOGICAL INSTITUTE, KANPUR, PIN: 208002, STATE: UTTAR PRADESH, COUNTRY: INDIA

DATE OF REGISTRATION	06/06/2014
TITLE	SOLAR POWERED BATTERY DRIVEN TRICYCLE

PRIORITY NA

DESIGN NUMBER	263623
CLASS	08-06

1)DILIPBHAI BACHUBHAI HIRPARA (INDIAN NATIONALS) AND SOLE PROPRIETOR OF JANKI DIE-CAST (INDIAN PROPRIETORSHIP CONCERN) HAVING PLACE OF BUSINESS AT-
PLOT NO. 834, AJI INDUSTRIAL AREA, NR; SITARAM WAY BRIDGE, OPP: MUNICIPAL WORKSHOP, BHAVNAGAR ROAD, RAJKOT-GUJARAT (INDIA)

DATE OF REGISTRATION	24/06/2014
TITLE	HANDLE

PRIORITY NA

DESIGN NUMBER	265801	
CLASS	09-03	
1)NAYASA SUPERPLAST OF SURVEY NO. 370/2 (7) KACHIGAM, NANI DAMAN, DAMAN-396210, (UNION TERRITORIES), INDIA, INDIAN PARTNERSHIP FIRM, WHOSE PARTNERS ARE SACHIN SACHDEV & MANASI SACHDEV, ALL INDIAN NATIONALS		
DATE OF REGISTRATION	22/09/2014	
TITLE	CONTAINER WITH LID	
PRIORITY NA		

DESIGN NUMBER	265853	
CLASS	08-07	
1)GODREJ & BOYCE MFG. CO. LTD. OF LOCKS DIVISION (PLANT-18), PIROJSHANAGAR, VIKHROLI, MUMBAI - 400079, MAHARASHTRA, INDIA, INDIAN COMPANY		
DATE OF REGISTRATION	23/09/2014	
TITLE	PADLOCK	
PRIORITY NA		

DESIGN NUMBER	264569	
CLASS	24-02	
1)MANI, INC., 8-3 KIYOHARA INDUSTRIAL PARK, UTSUNOMIYA TOCHIGI, 321-3231, JAPAN, NATIONALITY-JAPAN		
DATE OF REGISTRATION	07/08/2014	
TITLE	KNIFE WITH COVER	

PRIORITY

PRIORITY NUMBER	DATE	COUNTRY
2014-003247	18/02/2014	JAPAN

DESIGN NUMBER	263360
CLASS	02-02
1)TAHILIANI DESIGN PVT. LTD., WHICH IS OF THE ADDRESS 708, PACE CITY-2, SECTOR-37, PART-II, GURGAON (HARYANA), A COMPANY INCORPORATED UNDER THE LAWS OF INDIA	
DATE OF REGISTRATION	16/06/2014
TITLE	T-SHIRT FOR WOMEN
PRIORITY NA	

DESIGN NUMBER	262612
CLASS	12-16
1)EDSCHA TRAILER SYSTEMS GMBH, A LIMITED LIABILITY CORPORATION ORGANIZED AND EXISTING UNDER THE LAWS OF GERMANY WHOSE ADDRESS IS IM MOERSER FELD 1F, 47441 MOERS, GERMANY	
DATE OF REGISTRATION	15/05/2014
TITLE	GUIDE RAILS FOR A TARPAULIN COVER OF A COMMERCIAL VEHICLE

PRIORITY

PRIORITY NUMBER	DATE	COUNTRY
DM/082 546	15/11/2013	GERMANY

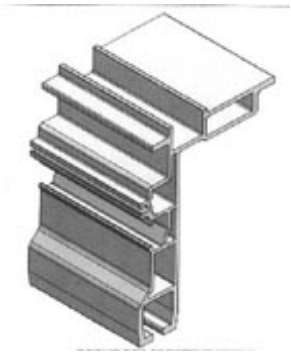

DESIGN NUMBER	263625
CLASS	08-06
1)(1)MAHESHBHAI SASHIKANTBHAI PIPALIYA (2) MANOJBHAI JERAMBHAI LILA (BOTH THE PARTNERS ARE ADULT & INDIAN NATIONAL) PARTNERS OF KRISHA METAL (INDIAN PARTNERSHIP FIRM) HAVING PLACE OF BUSINESS AT- 6, PARSANA SOCIETY, 50, FEET ROAD, ‘‘RAM RAJKOT-360 002-GUJARAT-(INDIA)	
DATE OF REGISTRATION	24/06/2014
TITLE	HANDLE
PRIORITY NA	

DESIGN NUMBER	261970	
CLASS	09-03	
1)ASAHI KASEI CHEMICALS CORPORATION., 1-105, KANDA JINBOCHO, CHIYODA-KU, TOKYO 101-8101, JAPAN; NATIONALITY: JAPAN		
DATE OF REGISTRATION	23/04/2014	
TITLE	BOX FOR ROLLED COOKING SHEET	
PRIORITY NA		
DESIGN NUMBER	267376	
CLASS	12-15	
1)METRO TYRES LIMITED, A COMPANY INCORPORATED UNDER THE INDIAN COMPANIES ACT, 1956 NATIONALITY: INDIAN COMPANY, C-49, SECTOR-62, NOIDA-201301, U.P.		
DATE OF REGISTRATION	13/11/2014	
TITLE	TYRE	
PRIORITY NA		
DESIGN NUMBER	265661	
CLASS	23-01	
1)THE SUPREME INDUSTRIES LTD., (AN INDIAN PUBLIC LIMITED COMPANY), 601 CENTRAL PLAZA, 2/6, SARAT BOSE ROAD, KOLKATA - 700020, WEST BENGAL, INDIA		
DATE OF REGISTRATION	12/09/2014	
TITLE	FITTING FOR SEWERAGE FITTINGS	
PRIORITY NA		

DESIGN NUMBER	266312
CLASS	05-05

1)M/S. BIBA APPARELS PRIVATE LIMITED, AN INDIAN PRIVATE LIMITED COMPANY INCORPORATED UNDER THE PROVISION OF THE COMPANIES ACT, 1956, AND HAVING ITS'S REGISTERED OFFICE AT RELIABLE HOUSE, SITUATED AT
HANUMAN SILK MILL COMPOUND, KANJURMARG (WEST), OPP. HUMA MALL, MUMBAI-400 078 MAHARASHTRA, INDIA.

DATE OF REGISTRATION	30/09/2014
TITLE	TEXTILE FABRIC

PRIORITY NA

DESIGN NUMBER	264570
CLASS	24-02

1)MANI, INC.,
8-3 KIYOHARA INDUSTRIAL PARK, UTSUNOMIYA TOCHIGI, 321-3231, JAPAN, NATIONALITY-JAPAN

DATE OF REGISTRATION	07/08/2014
TITLE	KNIFE WITH COVER

PRIORITY

PRIORITY NUMBER	DATE	COUNTRY
2014-003248	18/02/2014	JAPAN

DESIGN NUMBER	263362
CLASS	02-02

1)TAHILIANI DESIGN PVT. LTD., WHICH IS OF THE ADDRESS
708, PACE CITY-2, SECTOR-37, PART-II, GURGAON (HARYANA), A COMPANY INCORPORATED UNDER THE LAWS OF INDIA

DATE OF REGISTRATION	16/06/2014
TITLE	TOP

PRIORITY NA

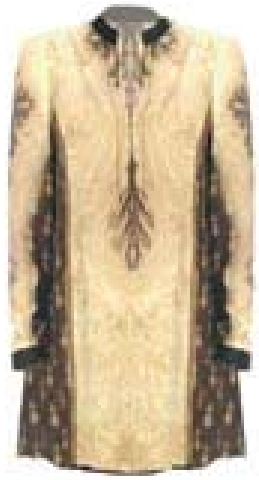

DESIGN NUMBER	262613
CLASS	12-16
1)EDSCHA TRAILER SYSTEMS GMBH, A LIMITED LIABILITY CORPORATION ORGANIZED AND EXISTING UNDER THE LAWS OF GERMANY WHOSE ADDRESS IS IM MOERSER FELD 1F, 47441 MOERS, GERMANY	
DATE OF REGISTRATION	15/05/2014
TITLE	GUIDE RAILS FOR A TARPAULIN COVER OF A COMMERCIAL VEHICLE
PRIORITY	

PRIORITY NUMBER	DATE	COUNTRY
DM/082 546	15/11/2013	GERMANY

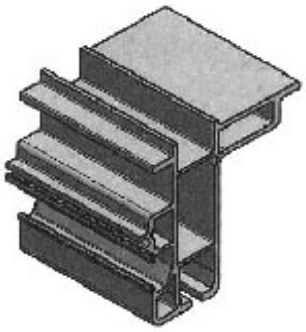

DESIGN NUMBER	265079
CLASS	02-04
1)V. SHAREEF (INDIAN) PROPRIETOR OF M/S CONCORD POLYMERS, N.H. ROAD, CHUNKAM, FAROKE P.O. PIN-673 631, KOZHIKODE, KERALA, INDIA	
DATE OF REGISTRATION	25/08/2014
TITLE	FOOTWEAR
PRIORITY NA	

DESIGN NUMBER	265662
CLASS	23-01
1)THE SUPREME INDUSTRIES LTD., (AN INDIAN PUBLIC LIMITED COMPANY), 601 CENTRAL PLAZA, 2/6, SARAT BOSE ROAD, KOLKATA - 700020, WEST BENGAL, INDIA	
DATE OF REGISTRATION	12/09/2014
TITLE	FITTING FOR SEWERAGE DISPOSAL
PRIORITY NA	

DESIGN NUMBER	265803	
CLASS	07-01	
1)NAYASA POLYPLAST OF G-9 UDYOG NAGAR O.I.D.C., RINGANVADA NANI DAMAN, DAMAN-396210, INDIA, INDIAN PARTNERSHIP FIRM, WHOSE PARTNERS ARE DINESH LAXMINARAYAN MALIK & MANASI SACHDEV, ALL INDIAN NATIONALS		
DATE OF REGISTRATION	22/09/2014	
TITLE	BOWL WITH LID	
PRIORITY NA		

DESIGN NUMBER	265414	
CLASS	06-03	
1)MA DESIGN INDIA PRIVATE LIMITED, A COMPANY INCORPORATED IN INDIA HAVING ITS PRINCIPAL PLACE OF BUSINESS AT A-41, SECTOR-80, PHASE-II, NOIDA-201305, U.P. INDIA		
DATE OF REGISTRATION	04/09/2014	
TITLE	TABLE	
PRIORITY NA		

DESIGN NUMBER	266325	
CLASS	05-05	
1)M/S. BIBA APPARELS PRIVATE LIMITED, AN INDIAN PRIVATE LIMITED COMPANY INCORPORATED UNDER THE PROVISION OF THE COMPANIES ACT, 1956, AND HAVING ITS'S REGISTERED OFFICE AT RELIABLE HOUSE, SITUATED AT HANUMAN SILK MILL COMPOUND, KANJURMARG (WEST), OPP. HUMA MALL, MUMBAI-400 078 MAHARASHTRA, INDIA.		
DATE OF REGISTRATION	30/09/2014	
TITLE	TEXTILE FABRIC	
PRIORITY NA		

DESIGN NUMBER	263365
CLASS	02-02
1)TAHILIANI DESIGN PVT. LTD., WHICH IS OF THE ADDRESS 708, PACE CITY-2, SECTOR-37, PART-II, GURGAON (HARYANA), A COMPANY INCORPORATED UNDER THE LAWS OF INDIA	
DATE OF REGISTRATION	16/06/2014
TITLE	DRESS FOR WOMEN
PRIORITY NA	

DESIGN NUMBER	262614
CLASS	12-16
1)EDSCHA TRAILER SYSTEMS GMBH, A LIMITED LIABILITY CORPORATION ORGANIZED AND EXISTING UNDER THE LAWS OF GERMANY WHOSE ADDRESS IS IM MOERSER FELD 1F, 47441 MOERS, GERMANY	
DATE OF REGISTRATION	15/05/2014
TITLE	GUIDE RAILS FOR A TARPAULIN COVER OF A COMMERCIAL VEHICLE

PRIORITY

PRIORITY NUMBER	DATE	COUNTRY
DM/082 546	15/11/2013	GERMANY

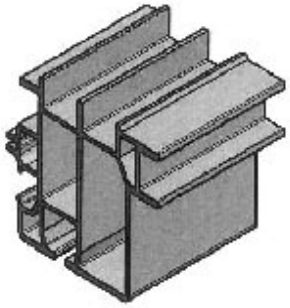

DESIGN NUMBER	263672
CLASS	08-07
1)INDUSTRILÅS I NÄSSJÖ AKTIEBOLAG, A SWEDISH COMPANY OF BOX NO. 214, 571 23 NÄSSJÖ, SWEDEN	
DATE OF REGISTRATION	25/06/2014
TITLE	PADDLE HANDLE LATCH

PRIORITY

PRIORITY NUMBER	DATE	COUNTRY
002384081-0001	14/01/2014	OHIM

DESIGN NUMBER	261978
CLASS	23-01
1)DANFOSS A/S, A DANISH COMPANY, OF NORDBORGVEJ 81, DK-6430 NORDBORG, DENMARK	
DATE OF REGISTRATION	24/04/2014
TITLE	VALVE

PRIORITY

PRIORITY NUMBER	DATE	COUNTRY
002333492-0001	25/10/2013	OHIM

DESIGN NUMBER	262531
CLASS	07-06
1)M/S MAGPPIE RETAIL LIMITED HAVING ITS REGISTERED OFFICE AT PD-4A, PITAMPURA, NEW DELHI-110088, DELHI, INDIA	
DATE OF REGISTRATION	12/05/2014
TITLE	BREAD BASKET

PRIORITY NA

DESIGN NUMBER	265718
CLASS	06-13
1)M/S. NAL TEX, A PARTNERSHIP FIRM REGISTERED UNDER THE INDIAN PARTNERSHIP ACT, REPRESENTED BY ITS PARTNERS VALIYANOOR KRISHNASAMY DURAISAMY AND DURAISAMY NALLAMUTHU, AT 166/133, KAMARAJAPURAM NORTH, KARUR-639002, TAMIL NADU	
DATE OF REGISTRATION	16/09/2014
TITLE	CUSHION COVER
PRIORITY NA	

DESIGN NUMBER	266340	
CLASS	05-05	
1)M/S. BIBA APPARELS PRIVATE LIMITED, AN INDIAN PRIVATE LIMITED COMPANY INCORPORATED UNDER THE PROVISION OF THE COMPANIES ACT, 1956, AND HAVING ITS'S REGISTERED OFFICE AT RELIABLE HOUSE, SITUATED AT HANUMAN SILK MILL COMPOUND, KANJURMARG (WEST), OPP. HUMA MALL, MUMBAI-400 078 MAHARASHTRA, INDIA.		
DATE OF REGISTRATION	30/09/2014	
TITLE	TEXTILE FABRIC	
PRIORITY NA		
DESIGN NUMBER	264872	
CLASS	08-06	
1)KAPILBHAI BALVANTRAI VYAS AND JIGNESHBHAI CHHAGANBHAI GOHEL BOTH INDIAN NATIONAL PARTNER OF RATNAPRABHA HARDWARE AN INDIAN PARTNERSHIP FIRM HAVING ITS PRINCIPAL PLACE OF BUSINESS AT ADDRESS:- 6, PARSANA SOCIETY, 50 FEET ROAD, KOTHARIYA MAIN ROAD, RAJKOT-2. GUJARAT-INDIA		
DATE OF REGISTRATION	19/08/2014	
TITLE	HANDLE	
PRIORITY NA		
DESIGN NUMBER	265383	
CLASS	09-01	
1)MUKESH KHANNA, SOLE PROPRIETOR OF PINAAZ PERSONAL CARE WHOSE ADDRESS IS PLOT NO. 45, POCKET H, SECTOR-5, BAWANA INDUSTRIAL AREA, DELHI-110039, INDIA AN INDIAN NATIONAL OF ABOVE ADDRESS		
DATE OF REGISTRATION	03/09/2014	
TITLE	BOTTLE	
PRIORITY NA		

DESIGN NUMBER	263787	
CLASS	23-01	
1)DAYAL CHAND TRADING AS M/S. SIGMA REFRIGERATION WORKS, 3745, SHOP NO. 1 & 7, KUCHA PARMANAND, NETAJI SUBHASH MARG, DARYA GANJ, NEW DELHI-110002, INDIA (A SOLE PROPRIETORSHIP FIRM)		
DATE OF REGISTRATION	01/07/2014	
TITLE	VALVE	
PRIORITY NA		
DESIGN NUMBER	266329	
CLASS	05-05	
1)M/S. BIBA APPARELS PRIVATE LIMITED, AN INDIAN PRIVATE LIMITED COMPANY INCORPORATED UNDER THE PROVISION OF THE COMPANIES ACT, 1956, AND HAVING ITS'S REGISTERED OFFICE AT RELIABLE HOUSE, SITUATED AT HANUMAN SILK MILL COMPOUND, KANJURMARG (WEST), OPP. HUMA MALL, MUMBAI-400 078 MAHARASHTRA, INDIA.		
DATE OF REGISTRATION	30/09/2014	
TITLE	TEXTILE FABRIC	
PRIORITY NA		
DESIGN NUMBER	265615	
CLASS	23-02	
1)MASCO CORPORATION OF INDIANA, AN INDIANA CORPORATION, OF THE ADDRESS 55 EAST 111TH STREET, INDIANAPOLIS, INDIANA 46280		
DATE OF REGISTRATION	11/09/2014	
TITLE	HANDSHOWER	
PRIORITY		

PRIORITY NUMBER	DATE	COUNTRY
29/488,635	22/04/2014	U.S.A.

DESIGN NUMBER	260955
CLASS	01-01
1)INTERCONTINENTAL GREAT BRANDS LLC, 100 DEFOREST AVENUE, EAST HANOVER, NJ 07936, U.S.A., NATIONALITY: U.S.A.	
DATE OF REGISTRATION	13/03/2014
TITLE	CANDY

PRIORITY

PRIORITY NUMBER	DATE	COUNTRY
29/467,139	16/09/2013	U.S.A.

DESIGN NUMBER	263677
CLASS	08-07
1)INDUSTRILÅS I NÄSSJÖ AKTIEBOLAG, A SWEDISH COMPANY OF BOX NO. 214, 571 23 NÄSSJÖ, SWEDEN	
DATE OF REGISTRATION	25/06/2014
TITLE	PADDLE HANDLE LATCH

PRIORITY

PRIORITY NUMBER	DATE	COUNTRY
002384081-0006	14/01/2014	OHIM

DESIGN NUMBER	261982
CLASS	23-01
1)DANFOSS A/S, A DANISH COMPANY, OF NORDBORGVEJ 81, DK-6430 NORDBORG, DENMARK	
DATE OF REGISTRATION	24/04/2014
TITLE	VALVE

PRIORITY

PRIORITY NUMBER	DATE	COUNTRY
002333492-0005	25/10/2013	OHIM

DESIGN NUMBER	263946
CLASS	07-02
1) S. N. PLAST, INDIAN PROPRIETOR FIRM 41, KRISHNA ESTATE, B/H. B.O.C. GASSES, OPP. GOPINATH ESTATE, NR. SONI NI CHAWL, RAKHIAL, AHMEDABAD, GUJARAT-380023	
DATE OF REGISTRATION	09/07/2014
TITLE	LUNCH BOX
PRIORITY NA	

DESIGN NUMBER	265719
CLASS	23-01
1)MASCO CORPORATION OF INDIANA, AN INDIANA CORPORATION, OF THE ADDRESS 55 EAST 111TH STREET, INDIANAPOLIS, INDIANA 46280	
DATE OF REGISTRATION	16/09/2014
TITLE	FAUCET SPOUT

PRIORITY

PRIORITY NUMBER	DATE	COUNTRY
29/488,860	24/04/2014	U.S.A.

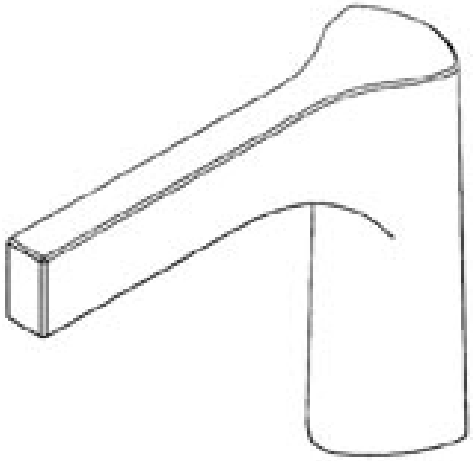

DESIGN NUMBER	262532
CLASS	07-01
1)M/S MAGPPIE RETAIL LIMITED HAVING ITS REGISTERED OFFICE AT PD-4A, PITAMPURA, DELHI-110088, DELHI, INDIA	
DATE OF REGISTRATION	12/05/2014
TITLE	CUP AND SAUCER SET
PRIORITY NA	

DESIGN NUMBER	265520	
CLASS	26-05	
1)SPECTRUM TECHVISION PRIVATE LIMITED, AN INDIAN COMPANY HAVING ITS REGISTERED OFFICE AT #96, 2ND FLOOR, 1ST MAIN ROAD, PETECHANNAPPA INDUSTRIAL ESTATE, KAMAKSHIPALYA, MAGADI MAIN ROAD, BANGALORE-560 079, STATE OF KARNATAKA, INDIA		
DATE OF REGISTRATION	08/09/2014	
TITLE	LED LIGHT	
PRIORITY NA		
DESIGN NUMBER	266341	
CLASS	05-05	
1)M/S. BIBA APPARELS PRIVATE LIMITED, AN INDIAN PRIVATE LIMITED COMPANY INCORPORATED UNDER THE PROVISION OF THE COMPANIES ACT, 1956, AND HAVING ITS'S REGISTERED OFFICE AT RELIABLE HOUSE, SITUATED AT HANUMAN SILK MILL COMPOUND, KANJURMARG (WEST), OPP. HUMA MALL, MUMBAI-400 078 MAHARASHTRA, INDIA.		
DATE OF REGISTRATION	30/09/2014	
TITLE	TEXTILE FABRIC	
PRIORITY NA		
DESIGN NUMBER	263798	
CLASS	15-02	
1)M/S. VGS INDUSTRIES, THROUGH SHRI VIVEK KHULLAR, PARTNER, 2362, MIE, BAHADURGARH, HARYANA-124507, INDIA, INDIAN		
DATE OF REGISTRATION	01/07/2014	
TITLE	SUBMERSIBLE PUMP	
PRIORITY NA		

DESIGN NUMBER	265616
CLASS	08-08
1)MASCO CORPORATION OF INDIANA, AN INDIANA CORPORATION, OF THE ADDRESS 55 EAST 111TH STREET, INDIANAPOLIS, INDIANA 46280	
DATE OF REGISTRATION	11/09/2014
TITLE	HOOK
PRIORITY	

PRIORITY NUMBER	DATE	COUNTRY
29/488,610	22/04/2014	U.S.A.

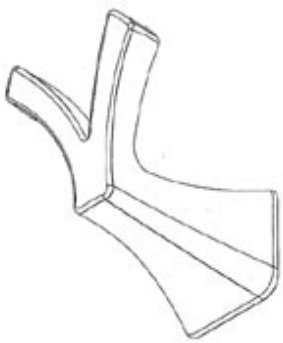

DESIGN NUMBER	266330
CLASS	05-05
1)M/S. BIBA APPARELS PRIVATE LIMITED, AN INDIAN PRIVATE LIMITED COMPANY INCORPORATED UNDER THE PROVISION OF THE COMPANIES ACT, 1956, AND HAVING ITS'S REGISTERED OFFICE AT RELIABLE HOUSE, SITUATED AT HANUMAN SILK MILL COMPOUND, KANJURMARG (WEST), OPP. HUMA MALL, MUMBAI-400 078 MAHARASHTRA, INDIA.	
DATE OF REGISTRATION	30/09/2014
TITLE	TEXTILE FABRIC
PRIORITY NA	

DESIGN NUMBER	263312
CLASS	19-06
1)M/S. KLIK WRITING INSTRUMENTS, A PARTNERSHIP FIRM REGISTERED UNDER THE INDIAN PARTNERSHIP ACT, 1932 HAVING ITS REGISTERED OFFICE AT B-702, VIKAS PALMS, DR. AMBEDKAR ROAD, THANE (WEST)-400602, MAHARASHTRA STATE, INDIA	
DATE OF REGISTRATION	13/06/2014
TITLE	PEN
PRIORITY NA	

DESIGN NUMBER	264126
CLASS	09-01
1)DABUR INDIA LIMITED CORPORATE OFFICE KAUSHAMBI, SAHIBABAD-201010, DISTT. GHAZIABAD (U.P.) INDIA, AN INDIAN COMPANY	
DATE OF REGISTRATION	18/07/2014
TITLE	BOTTLE
PRIORITY NA	

DESIGN NUMBER	260956
CLASS	01-01
1)INTERCONTINENTAL GREAT BRANDS LLC, 100 DEFOREST AVENUE, EAST HANOVER, NJ 07936, U.S.A., NATIONALITY: U.S.A.	
DATE OF REGISTRATION	13/03/2014
TITLE	CANDY

PRIORITY

PRIORITY NUMBER	DATE	COUNTRY
29/467,139	16/09/2013	U.S.A.

DESIGN NUMBER	263685
CLASS	09-03
1)S. N. PLAST, NATIONALITY: AN INDIAN, ADDRESS: 41, KRISHNA ESTATE, B/H. B.O.C. GASSES, OPP. GOPINATH ESTATE, NR. SONI NI CHAWL, RAKHIAL, AHMEDABAD, GUJARAT-380023	
DATE OF REGISTRATION	25/06/2014
TITLE	LUNCH BOX
PRIORITY NA	

DESIGN NUMBER	261998
CLASS	08-07
1)M/S JHA INDUSTRIES (AN INDIAN PROPRIETORSHIP BUSINESS) AT PATEL NAGAR, AGRA ROAD, ALIGARH (U.P.), WHOSE PROPRIETOR IS RAKESH JHA, BY NATIONALITY INDIAN OF ABOVE ADDRESS	
DATE OF REGISTRATION	24/04/2014
TITLE	SEAL
PRIORITY NA	

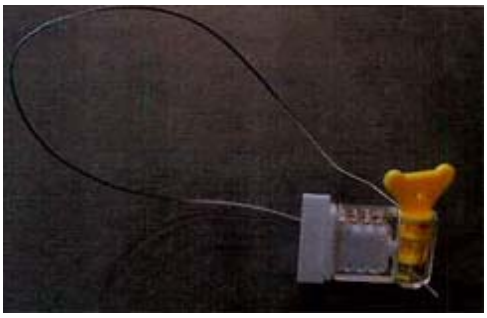

DESIGN NUMBER	265666
CLASS	23-01
1)THE SUPREME INDUSTRIES LTD., (AN INDIAN PUBLIC LIMITED COMPANY), 601 CENTRAL PLAZA, 2/6, SARAT BOSE ROAD, KOLKATA - 700020, WEST BENGAL, INDIA	
DATE OF REGISTRATION	12/09/2014
TITLE	FITTING FOR SEWERAGE DISPOSAL
PRIORITY NA	

DESIGN NUMBER	266328
CLASS	05-05
1)M/S. BIBA APPARELS PRIVATE LIMITED, AN INDIAN PRIVATE LIMITED COMPANY INCORPORATED UNDER THE PROVISION OF THE COMPANIES ACT, 1956, AND HAVING ITS'S REGISTERED OFFICE AT RELIABLE HOUSE, SITUATED AT HANUMAN SILK MILL COMPOUND, KANJURMARG (WEST), OPP. HUMA MALL, MUMBAI-400 078 MAHARASHTRA, INDIA.	
DATE OF REGISTRATION	30/09/2014
TITLE	TEXTILE FABRIC
PRIORITY NA	

DESIGN NUMBER	265614
CLASS	23-01
1)MASCO CORPORATION OF INDIANA, AN INDIANA CORPORATION, OF THE ADDRESS 55 EAST 111TH STREET, INDIANAPOLIS, INDIANA 46280	
DATE OF REGISTRATION	11/09/2014
TITLE	FAUCET

PRIORITY

PRIORITY NUMBER	DATE	COUNTRY
29/488,608	22/04/2014	U.S.A.

DESIGN NUMBER	263369
CLASS	02-05
1)TAHILIANI DESIGN PVT. LTD., WHICH IS OF THE ADDRESS 708, PACE CITY-2, SECTOR-37, PART-II, GURGAON (HARYANA), A COMPANY INCORPORATED UNDER THE LAWS OF INDIA	
DATE OF REGISTRATION	16/06/2014
TITLE	SCARF FOR WOMEN
PRIORITY NA	

DESIGN NUMBER	263487
CLASS	10-07
1)ROLEX SA, A JOINT STOCK COMPANY ORGANIZED AND EXISTING UNDER THE LAWS OF SWITZERLAND, OF 3-5-7, RUE FRANÇOIS-DUSSAUD, GENEVA, SWITZERLAND	
DATE OF REGISTRATION	19/06/2014
TITLE	WATCH DIAL

PRIORITY

PRIORITY NUMBER	DATE	COUNTRY
140343	20/12/2013	SWITZERLAND

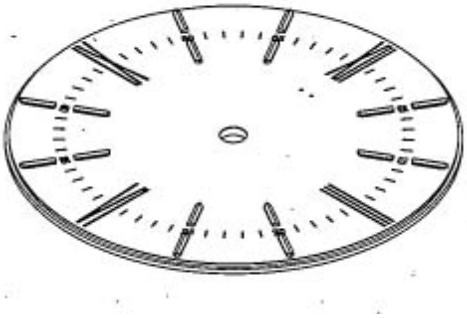

DESIGN NUMBER	260954
CLASS	01-01
1)INTERCONTINENTAL GREAT BRANDS LLC, 100 DEFOREST AVENUE, EAST HANOVER, NJ 07936, U.S.A., NATIONALITY: U.S.A.	
DATE OF REGISTRATION	13/03/2014
TITLE	CANDY

PRIORITY

PRIORITY NUMBER	DATE	COUNTRY
29/467,139	16/09/2013	U.S.A.

DESIGN NUMBER	263675
CLASS	08-07
1)INDUSTRILÅS I NÄSSJÖ AKTIEBOLAG, A SWEDISH COMPANY OF BOX NO. 214, 571 23 NÄSSJÖ, SWEDEN	
DATE OF REGISTRATION	25/06/2014
TITLE	PADDLE HANDLE LATCH

PRIORITY

PRIORITY NUMBER	DATE	COUNTRY
002384081-0004	14/01/2014	OHIM

DESIGN NUMBER	261981
CLASS	23-01
1)DANFOSS A/S, A DANISH COMPANY, OF NORDBORGVEJ 81, DK-6430 NORDBORG, DENMARK	
DATE OF REGISTRATION	24/04/2014
TITLE	VALVE

PRIORITY

PRIORITY NUMBER	DATE	COUNTRY
002333492-0004	25/10/2013	OHIM

DESIGN NUMBER	265663
CLASS	23-01
1)THE SUPREME INDUSTRIES LTD., (AN INDIAN PUBLIC LIMITED COMPANY), 601 CENTRAL PLAZA, 2/6, SARAT BOSE ROAD, KOLKATA - 700020, WEST BENGAL, INDIA	
DATE OF REGISTRATION	12/09/2014
TITLE	FITTING FOR SEWERAGE DISPOSAL
PRIORITY NA	

DESIGN NUMBER	265804
CLASS	07-99
1)NAYASA POLYPLAST OF G-9 UDYOG NAGAR O.I.D.C., RINGANVADA NANI DAMAN, DAMAN-396210, INDIA, INDIAN PARTNERSHIP FIRM, WHOSE PARTNERS ARE DINESH LAXMINARAYAN MALIK & MANASI SACHDEV, ALL INDIAN NATIONALS	
DATE OF REGISTRATION	22/09/2014
TITLE	TRAY
PRIORITY NA	

DESIGN NUMBER	266326
CLASS	05-05
1)M/S. BIBA APPARELS PRIVATE LIMITED, AN INDIAN PRIVATE LIMITED COMPANY INCORPORATED UNDER THE PROVISION OF THE COMPANIES ACT, 1956, AND HAVING ITS'S REGISTERED OFFICE AT RELIABLE HOUSE, SITUATED AT HANUMAN SILK MILL COMPOUND, KANJURMARG (WEST), OPP. HUMA MALL, MUMBAI-400 078 MAHARASHTRA, INDIA.	
DATE OF REGISTRATION	30/09/2014
TITLE	TEXTILE FABRIC
PRIORITY NA	

DESIGN NUMBER	265419
CLASS	07-08
1)MA DESIGN INDIA PRIVATE LIMITED, A COMPANY INCORPORATED IN INDIA HAVING ITS PRINCIPAL PLACE OF BUSINESS AT A-41, SECTOR-80, PHASE-II, NOIDA-201305, U.P. INDIA	
DATE OF REGISTRATION	04/09/2014
TITLE	ANDIRON (TO HOLD FIREWOOD)
PRIORITY NA	

DESIGN NUMBER	263366
CLASS	02-02
1)TAHILIANI DESIGN PVT. LTD., WHICH IS OF THE ADDRESS 708, PACE CITY-2, SECTOR-37, PART-II, GURGAON (HARYANA), A COMPANY INCORPORATED UNDER THE LAWS OF INDIA	
DATE OF REGISTRATION	16/06/2014
TITLE	T-SHIRT FOR WOMEN
PRIORITY NA	

DESIGN NUMBER	263457
CLASS	14-03
1)SAMSUNG ELECTRONICS CO., LTD. 129, SAMSUNG-RO, YEONGTONG-GU, SUWON-SI, GYEONGGI-DO, 443-742, REPUBLIC OF KOREA, A COMPANY OF REPUBLIC OF KOREA	
DATE OF REGISTRATION	17/06/2014
TITLE	MOBILE PHONE

PRIORITY

PRIORITY NUMBER	DATE	COUNTRY
30-2014-0008261	19/02/2014	REPUBLIC OF KOREA

DESIGN NUMBER	263673
CLASS	08-07
1)INDUSTRILÅS I NÄSSJÖ AKTIEBOLAG, A SWEDISH COMPANY OF BOX NO. 214, 571 23 NÄSSJÖ, SWEDEN	
DATE OF REGISTRATION	25/06/2014
TITLE	PADDLE HANDLE LATCH

PRIORITY

PRIORITY NUMBER	DATE	COUNTRY
002384081-0002	14/01/2014	OHIM

DESIGN NUMBER	261979
CLASS	23-01
1)DANFOSS A/S, A DANISH COMPANY, OF NORDBORGVEJ 81, DK-6430 NORDBORG, DENMARK	
DATE OF REGISTRATION	24/04/2014
TITLE	VALVE

PRIORITY

PRIORITY NUMBER	DATE	COUNTRY
002333492-0002	25/10/2013	OHIM

DESIGN NUMBER	265665
CLASS	23-01
1)THE SUPREME INDUSTRIES LTD., (AN INDIAN PUBLIC LIMITED COMPANY), 601 CENTRAL PLAZA, 2/6, SARAT BOSE ROAD, KOLKATA - 700020, WEST BENGAL, INDIA	
DATE OF REGISTRATION	12/09/2014
TITLE	FITTING FOR SEWERAGE DISPOSAL
PRIORITY NA	

DESIGN NUMBER	265805	
CLASS	07-01	
1)NAYASA POLYPLAST OF G-9 UDYOG NAGAR O.I.D.C., RINGANVADA NANI DAMAN, DAMAN-396210, INDIA, INDIAN PARTNERSHIP FIRM, WHOSE PARTNERS ARE DINESH LAXMINARAYAN MALIK & MANASI SACHDEV, ALL INDIAN NATIONALS		
DATE OF REGISTRATION	22/09/2014	
TITLE	PLATE	
PRIORITY NA		

DESIGN NUMBER	265420	
CLASS	07-08	
1)MA DESIGN INDIA PRIVATE LIMITED, A COMPANY INCORPORATED IN INDIA HAVING ITS PRINCIPAL PLACE OF BUSINESS AT A-41, SECTOR-80, PHASE-II, NOIDA-201305, U.P. INDIA		
DATE OF REGISTRATION	04/09/2014	
TITLE	ANDIRON (TO HOLD FIREWOOD)	
PRIORITY NA		

DESIGN NUMBER	265613	
CLASS	23-01	
1)MASCO CORPORATION OF INDIANA, AN INDIANA CORPORATION, OF THE ADDRESS 55 EAST 111TH STREET, INDIANAPOLIS, INDIANA 46280		
DATE OF REGISTRATION	11/09/2014	
TITLE	FAUCET SPOUT	
PRIORITY		

PRIORITY NUMBER	DATE	COUNTRY
29/488,605	22/04/2014	U.S.A.

DESIGN NUMBER	266327
CLASS	05-05
1)M/S. BIBA APPARELS PRIVATE LIMITED, AN INDIAN PRIVATE LIMITED COMPANY INCORPORATED UNDER THE PROVISION OF THE COMPANIES ACT, 1956, AND HAVING ITS'S REGISTERED OFFICE AT RELIABLE HOUSE, SITUATED AT HANUMAN SILK MILL COMPOUND, KANJURMARG (WEST), OPP. HUMA MALL, MUMBAI-400 078 MAHARASHTRA, INDIA.	
DATE OF REGISTRATION	30/09/2014
TITLE	TEXTILE FABRIC
PRIORITY NA	

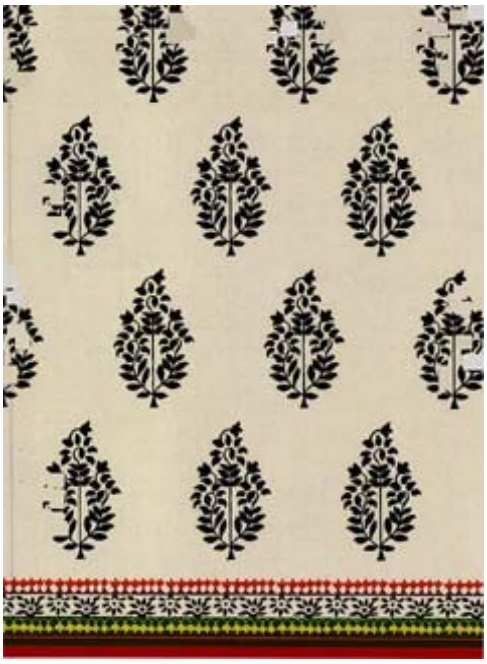

DESIGN NUMBER	263368
CLASS	02-02
1)TAHILIANI DESIGN PVT. LTD., WHICH IS OF THE ADDRESS 708, PACE CITY-2, SECTOR-37, PART-II, GURGAON (HARYANA), A COMPANY INCORPORATED UNDER THE LAWS OF INDIA	
DATE OF REGISTRATION	16/06/2014
TITLE	DRESS FOR WOMEN
PRIORITY NA	

DESIGN NUMBER	262621
CLASS	23-03
1)BHARAT HEATERS INDUSTRIES, 18-B, D.D.A. FLAT, L.I.G., JHILMIL, SHAHDARA, DELHI-110095, INDIA. (AN INDIAN PROPRIETORSHIP FIRM WHOSE PROPRIETOR IS:- SH. KAMAL VERMA AN INDIAN NATIONAL OF THE ABOVE ADDRESS	
DATE OF REGISTRATION	15/05/2014
TITLE	HEATER
PRIORITY NA	

DESIGN NUMBER	261980
CLASS	23-01
1)DANFOSS A/S, A DANISH COMPANY, OF NORDBORGVEJ 81, DK-6430 NORDBORG, DENMARK	
DATE OF REGISTRATION	24/04/2014
TITLE	VALVE

PRIORITY

PRIORITY NUMBER	DATE	COUNTRY
002333492-0003	25/10/2013	OHIM

DESIGN NUMBER	266285
CLASS	05-05
1)M/S. BIBA APPARELS PRIVATE LIMITED, AN INDIAN PRIVATE LIMITED COMPANY INCORPORATED UNDER THE PROVISION OF THE COMPANIES ACT, 1956, AND HAVING ITS'S REGISTERED OFFICE AT RELIABLE HOUSE, SITUATED AT HANUMAN SILK MILL COMPOUND, KANJURMARG (WEST), OPP. HUMA MALL, MUMBAI-400 078 MAHARASHTRA, INDIA.	
DATE OF REGISTRATION	30/09/2014
TITLE	TEXTILE FABRIC

PRIORITY NA

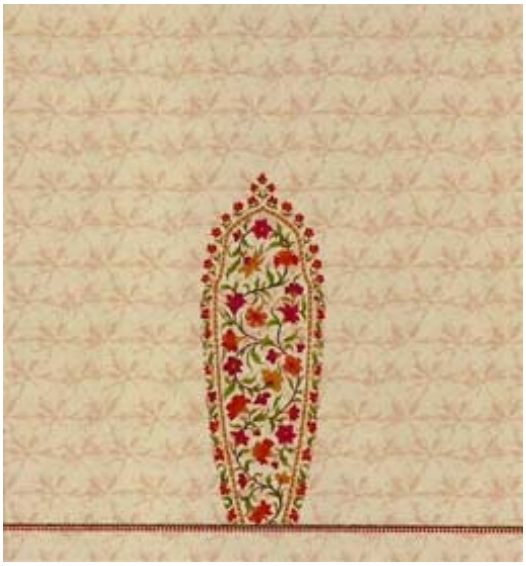

DESIGN NUMBER	264781
CLASS	25-01
1)NEXUS COUPLERS PTY LTD, A COMPANY INCORPORATED IN AUSTRALIA HAVING ADDRESS AS 9 WALTERS STREET, GLEN APLIN QLD 4381, AUSTRALIA	
DATE OF REGISTRATION	14/08/2014
TITLE	REINFORCING BAR COUPLER

PRIORITY

PRIORITY NUMBER	DATE	COUNTRY
10756/2014	18/02/2014	AUSTRALIA

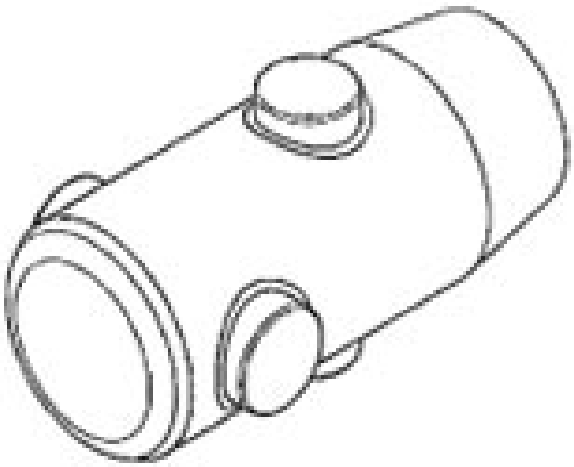

DESIGN NUMBER	264318
CLASS	25-02
1)YKK AP INC., A JAPANESE CORPORATION OF 1, KANDAIZUMI-CHO, CHIYODA-KU, TOKYO 101-8642, JAPAN	
DATE OF REGISTRATION	28/07/2014
TITLE	FITTING FOR WINDOW FRAME
PRIORITY	

PRIORITY NUMBER	DATE	COUNTRY
14-00409-0101	31/03/2014	MALAYSIA

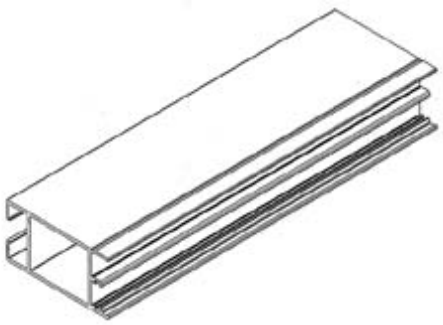

DESIGN NUMBER	265117
CLASS	26-04
1)M/S SHREE SANT KRIPA INTELLECTUAL, HAVING OFFICE AT 7, AKSHAY COMPLEX, OFF. DHOLE PATIL ROAD, PUNE-411001, MAHARASHTRA, INDIA, AN INDIAN	
DATE OF REGISTRATION	26/08/2014
TITLE	BULBS FOR ELECTRIC LAMPS
PRIORITY NA	

DESIGN NUMBER	263837
CLASS	30-99
1)SHIVAM POLYMERS, AN INDIAN COMPANY, OF B-16 SITE B, SURAJPUR INDUSTRIAL AREA, GREATER NOIDA-201306, UP, INDIA	
DATE OF REGISTRATION	02/07/2014
TITLE	TOY FOR PETS
PRIORITY NA	

DESIGN NUMBER	265521	
CLASS	26-05	
1)SPECTRUM TECHVISION PRIVATE LIMITED, AN INDIAN COMPANY HAVING ITS REGISTERED OFFICE AT #96, 2ND FLOOR, 1ST MAIN ROAD, PETECHANNAPPA INDUSTRIAL ESTATE, KAMAKSHIPALYA, MAGADI MAIN ROAD, BANGALORE-560 079, STATE OF KARNATAKA, INDIA		
DATE OF REGISTRATION	08/09/2014	
TITLE	LED LIGHT	
PRIORITY NA		

DESIGN NUMBER	262080	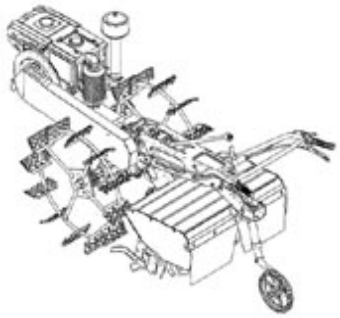
CLASS	15-03	
1)SIAM KUBOTA CORPORATION CO., LTD., A CORPORATION ORGANIZED AND EXISTING UNDER THE LAWS OF THAILAND, OF 101/19-24 MOO 20, NAVANAKORN INDUSTRIAL ESTATE, KLONGNEUNG SUB-DISTRICT, KLONGLUANG DISTRICT, PATHUMTANI PROVINCE, THAILAND		
DATE OF REGISTRATION	25/04/2014	
TITLE	ROTARY TILLER	
PRIORITY NA		

DESIGN NUMBER	265336	
CLASS	11-02	
1)AMAR SINGH YADAV, TRADING AS M/S. S. N. GLASS DECORATERS, SITUATED AT 2/778, SUHAG NAGAR, FIROZABAD (U.P.) INDIA, OF ABOVE ADDRESS		
DATE OF REGISTRATION	01/09/2014	
TITLE	FLOWER VASE	
PRIORITY NA		

DESIGN NUMBER	263874
CLASS	08-05
1)SULZER MIXPAC AG, OF RÜTISTRAßE 7, 9469 HAAG (RHEINTAL), SWITZERLAND	
DATE OF REGISTRATION	04/07/2014
TITLE	DISCHARGE DEVICE

PRIORITY

PRIORITY NUMBER	DATE	COUNTRY
002381236	07/01/2014	OHIM

DESIGN NUMBER	266331
CLASS	05-05
1)M/S. BIBA APPARELS PRIVATE LIMITED, AN INDIAN PRIVATE LIMITED COMPANY INCORPORATED UNDER THE PROVISION OF THE COMPANIES ACT, 1956, AND HAVING ITS'S REGISTERED OFFICE AT RELIABLE HOUSE, SITUATED AT HANUMAN SILK MILL COMPOUND, KANJURMARG (WEST), OPP. HUMA MALL, MUMBAI-400 078 MAHARASHTRA, INDIA.	
DATE OF REGISTRATION	30/09/2014
TITLE	TEXTILE FABRIC
PRIORITY NA	

DESIGN NUMBER	265502
CLASS	99-00
1)MR. MANIK DAWAR (DIRECTOR), NATIONALITY INDIAN TRADING AS MAMALOVE TOYS PVT. LTD. (INDIAN) WHOES ADDRESS IS 76-A, JHANDEWALAN EXTN. (DDA CYCLE MARKET) OPP. VIDEOCON TOWER, NEW DELHI-110055 (INDIA)	
DATE OF REGISTRATION	08/09/2014
TITLE	BABY STROLLER
PRIORITY NA	

DESIGN NUMBER	265978	
CLASS	22-06	
1)NAME: MOHAMMED ABDUL KADHAR, NATIONALITY: INDIAN, ADDRESS: 169, VAZHDAHVOOR MAIN ROAD, KAUNDANPALAYAM, PUDUCHERRY-605009		
DATE OF REGISTRATION	24/09/2014	
TITLE	TRAP FOR INSECTS	
PRIORITY NA		

DESIGN NUMBER	260957	
CLASS	01-01	
1)INTERCONTINENTAL GREAT BRANDS LLC, 100 DEFOREST AVENUE, EAST HANOVER, NJ 07936, U.S.A., NATIONALITY: U.S.A.		
DATE OF REGISTRATION	13/03/2014	
TITLE	CANDY	
PRIORITY		

PRIORITY NUMBER	DATE	COUNTRY
29/467,139	16/09/2013	U.S.A.